Prepared for

PG&E

and the
State Water Resources Control Board
Nuclear Review Committee

Independent Third-Party Interim Technical Assessment

for the

Closed-Cycle Cooling Water Technologies for Diablo Canyon Power Plant

Prepared by

BECHTEL

Bechtel Power Corporation

Report No. 25762-000-30R-G01G-00004 Rev. 0

July 19, 2012

Independent Third-Party
Interim Technical Assessment

for the

Closed-Cycle Cooling Water System Technologies for Diablo Canyon Power Plant

Prepared by:

Bechtel Power Corporation

Revision	Date	Affected Sections
0	July 19, 2012	Initial Issue

Contents

List of Abbreviations and Acronyms ..... **v**
1. Executive Summary **1**
2. Background and Introduction **1**
2.1 Purpose/Scope of Study 1
2.2 Regulatory History 1
2.2.1 Federal 1
2.2.2 State 2
2.3 Screening Process (A/B Criteria) 3
3. Technology Description **3**
3.1 Background 3
3.2 Dry/Air Cooling 5
3.2.1 Passive Draft Dry/Air Cooling 6
3.2.2 Mechanical (Forced) Draft Dry/Air Cooling 9
3.3 Wet Cooling 11
3.3.1 Wet Natural Draft Cooling 14
3.3.2 Wet Mechanical (Forced) Draft Cooling 15
3.4 Hybrid Wet/Dry Cooling 16
4. Criterion Evaluation **19**
4.1 External Approval and Permitting 19
4.2 Impingement/Entrainment Design 33
4.3 Offsetting Environmental Impacts 33
4.4 First-of-a-kind 45
4.5 Operability General Site Conditions 46
4.6 Seismic and Tsunami Issues 50
4.7 Structural 52
4.8 Construction 52
4.9 Maintenance 53
5. Conclusion **56**
6. References **57**

List of Tables

Table CC-1 Closed-Cycle Cooling System —Overall Conclusions 2

Table CC-2. San Luis Obispo Air Pollution Control District Emission Reduction Credit Banking Registry Excerpt (April 2012) 61

Table CC-4 Environmental Permit/Approval Assessment: Passive Draft Dry/Air Cooling System (Reclaimed and Freshwater) 70

Table CC-5 Environmental Permit/Approval Assessment: Mechanical (Forced) Draft Dry/Air Cooling (Saltwater) 77

Table CC-6 Environmental Permit/Approval Assessment: Mechanical (Forced) Draft Dry/Air Cooling (Reclaimed and Freshwater) 84

Table CC-7 Environmental Permit/Approval Assessment: Wet Natural Draft Cooling Towers (Saltwater) 91

Table CC-8 Environmental Permit/Approval Assessment: Wet Natural Draft Cooling Towers (Fresh and Reclaimed Water) 98

Table CC-9 Environmental Permit/Approval Assessment: Wet Mechanical Draft (forced) (Saltwater) 105

Table CC-10. Environmental Permit/Approval Assessment: Wet Mechanical Draft (Forced) (Fresh and Reclaimed) 112

Table CC-11 Environmental Permit/Approval Assessment: Hybrid Wet/Dry Cooling (Saltwater) 119

Table CC-12. Environmental Permit/Approval Assessment: Hybrid Wet/Dry Cooling (Fresh and Reclaimed Water) 127

Table CC-13. Offsetting Impacts for Passive Draft Dry/Air Cooling 134

Table CC-14. Offsetting Impacts for Mechanical (Forced) Draft Dry/Air Cooling 138

Table CC-15. Offsetting Impacts for Wet Natural Draft 142

Table CC-16. Offsetting Impacts for Wet Mechanical Dry (Forced) 147

Table CC-17. Offsetting Impacts for Hybrid Wet/Dry Cooling 152

Table CC-18. Major Cooling Tower Maintenance Activities 157

List of Figures

Figure CC-1. Sample Closed-Cycle System Using a Wet Mechanical (Forced) Draft Cooling Tower (Kroger, 2004) 4

Figure CC-2. Sample Air-Cooled Condensers (Kroger, 2004) 6

Figure CC-3. Sample Heat Exchanger Configurations for Passive Draft Dry/Air Cooling Towers (Kroger, 2004) 7

Figure CC-4. Sample Heller System (Kroger, 2004) 8

Figure CC-5. Conceptual Plot Plan Passive draft dry/air Cooling 9

Figure CC-6. Sample Forced Draft Mechanical (Forced) Draft Dry/Air Cooling Tower (Kroger, 2004) 10

Figure CC-7. Conceptual Plot Plan Mechanical (Forced) Draft Dry/Air Cooling Towers 11

Figure CC-8. Psychrometric Chart 12

Figure CC-9. Conceptual Plot Plan for Wet Closed-Cycle System Technologies Wet Natural Draft Cooling, Wet Mechanical (Fixed) Draft Cooling, Hybrid Wet/Dry Cooling 14

Figure CC-10. Sample Wet Natural Draft Cooling Tower Schematics (Cross- and Counterflow Internals Configurations)(Kroger, 2004) 15

Figure CC-11. Sample Wet Mechanical (Forced) Draft Cooling Configurations Rectangular In-Line (Left) and Round (Right) (Kroger, 2004) 15

Figure CC-12. Sample Wet Mechanical (Forced) Draft Cooling Tower Schematics (Cross- and Counterflow Internals Configurations (Kroger, 2004) 16

Figure CC-13. Sample Hybrid Wet/Dry Cooling Tower Schematic (Kroger, 2004) 17

Figure CC-15. Southern California Class I Areas 31

List of Abbreviations and Acronyms

agl	above ground level
APCD	Air Pollution Control District
ATC	Authority to Construct (Air Pollution Control District)
BLM	Bureau of Land Management
Caltrans	California Department of Transportation
CCRWQCB	Central Coast Regional Water Quality Control Board
CDFG	California Department of Fish & Game
CEC	California Energy Commission
CEQA	California Environmental Quality Act
CPUC	California Public Utility Commission
DCPP	Diablo Canyon Power Plant
EPCRA	Emergency Planning and Community Right-To-Know Act
EPRI	Electric Power Research Institute
ET	Evaptech, Inc.
FAA	Federal Aviation Administration
fps	foot per second
gpm	gallons per minute
GWA	Government of Western Australia
hybrid	hybrid wet/dry cooling
ICT	International Cooling Tower, Inc.
JUOTC	Joint Utility Once-Through Cooling
MDD	mechanical (forced) draft dry/air cooling
mgd	million gallons per day
NDW	wet natural (forced) draft cooling
NOI	notice of intent
NPDES	National Pollutant Discharge Elimination System
OHP	Office of Historic Preservation
PDD	passive draft dry/air cooling
PG&E	Pacific Gas and Electric
PTO	Permit to Operate (Air Pollution Control District)
RC	Resource Commission
RCRA	Resource Conservation and Recovery Act
RWQCB	Regional Water Quality Control Board
SPCC	Spill Prevention Control and Countermeasure Plan
SWPPP	Storm Water Pollution Prevention Plan
SWRCB	State Water Resources Council Board
USACE	U.S. Army Corps of Engineers
USEPA	U.S. Environmental Protection Agency
USMC	U.S. Marine Corps
WDR	Waste Discharge Requirement

Independent Third-Party Interim Technical Assessment
for the Closed Cooling System Water Technologies for
Diablo Canyon Power Plant
Report No. 25762-000-30R-G01G-00004

1. Executive Summary

This study summarizes the findings of the first phase of a detailed evaluation to assess viability of the closed-cycle cooling system option relative to once-through cooling for Diablo Canyon Power Plant (DCPP), in support of the Nuclear Review Committee's initiative to identify strategies to implement the *California Statewide Policy on the Use of Coastal and Estuarine Waters for Power Plant Cooling*, that is, strategies that comply with Section 316(b), *California Once-Through Cooling Policy*, Phase II rules.

All of the five closed-cycle cooling system technologies have been evaluated considering three water sources seawater, freshwater, and reclaimed water. They all satisfy the requirements of the Section 316(b) *California Once-Through Cooling Policy*, Phase II rules, therefore, each was evaluated in detail against the Joint Utility Once-Through Cooling (JUOTC)-defined evaluation criteria.

The external approval and permitting assessment for the five closed cooling water technologies identified a list of potentially applicable federal, state, and local permits and approvals that, not surprisingly, focused on its significant impacts to the marine environment. The efforts to conduct a successful California Environmental Quality Act (CEQA) and secure the U.S. Army Corps of Engineers (USACE) Section 404 permit, California Coastal Commission Coastal Development Permit, State Lands Commission Lease, National Pollutant Discharge Elimination System (NPDES) permit modification will represent the primary regulatory challenges.

These permits are all expected to be contentious and have lengthy processes that will be aligned with the CEQA/Environmental Impact Report review process. The primary issue of concern will be assessing the balance of the land usage, visual impacts, and the impact on the plant power output.

The five closed cooling water technologies have been reviewed against each of the Phase 1 criterion and the results are summarized below. It should be noted that for the wet closed cooling water technologies, that is, wet natural draft cooling, wet mechanical draft cooling, and the hybrid wet/dry cooling systems, the use of saltwater has been characterized as a fatal flaw due to their significant PM-10 emissions and the associated lack of sufficient related emission offsets. The use of fresh and reclaimed water in these systems, however, did prove to be acceptable. The overall finding is that although the five closed cooling technologies are feasible (assuming specific water supplies), there are several significant technical and operational challenges. These key challenges include the expected contentious permitting process, the size of the dry technology towers will require the acquisition of additional land, the significant tower construction challenges, the routing and construction of the plant infrastructure to circulate the cooling water to the towers, the significant derating of the units due to the increased condenser back pressure, the parasitic from the large tower sizes and discharge plume. These challenges can be overcome, that is, they do not represent fatal flaws at this stage of the assessment.

All of the technologies, with the exception of saltwater-supplied wet cooling towers, were determined to be acceptable. The evaluation findings are described in detail in Section 4 and summarized in the Table CC-1:

Table CC-1
Closed-Cycle Cooling System —Overall Conclusions

CRITERIA	STATUS				
Technology	**Passive Draft Dry/Air Cooling**	**Mechanical (Forced) Draft Dry/Air Cooling**	**Wet Natural Draft Cooling**	**Wet Mechanical (Forced) Draft Cooling**	**Hybrid Wet/Dry Cooling**
External Approval and Permitting	No fatal flaws.	No fatal flaws.	Fatal flaw for saltwater towers associated with lack of sufficient PM-2.5 offsets. No fatal flaws for reclaimed/freshwater towers.	Fatal flaw for saltwater towers associated with lack of sufficient PM-2.5 offsets. No fatal flaws for reclaimed/freshwater towers.	Fatal flaw for saltwater towers associated with lack of sufficient PM-10 offsets. No fatal flaws for reclaimed/freshwater towers.
Impingement/Entrainment Design	Satisfies Section 316(b) California OTC Policy Criteria requirements.	Satisfies Section 316(b) California OTC Policy Criteria requirements.	Satisfies Section 316(b) California OTC Policy Criteria requirements.	Satisfies Section 316(b) California OTC Policy Criteria requirements.	Satisfies Section 316(b) California OTC Policy Criteria requirements.
Environmental Offsets	Some negative impacts, no fatal flaws.	Some negative impacts, no fatal flaws.	Some negative impacts, no fatal flaws	Some negative impacts, no fatal flaws	Some negative impacts, no fatal flaws.
First-of-Kind-to-Scale	No fatal flaws.	No fatal flaws.	No fatal flaws.	No fatal flaws.	No fatal flaws.
Operability of General Site Conditions	No fatal flaws.	No fatal flaws.	No fatal flaws.	No fatal flaws.	No fatal flaws.
Seismic and Tsunami Issues	No fatal flaws.	No fatal flaws.	No fatal flaws.	No fatal flaws.	No fatal flaws.
Structure and Construction	No fatal flaws based on the assumption that additional land adjacent to the Owner-Controlled Area can be acquired as necessary to accommodate tower placement.	No fatal flaws based on the assumption that additional land adjacent to the Owner-acquired as necessary to accommodate tower placement.	No fatal flaws.	No fatal flaws.	No fatal flaws.
Maintenance	No fatal flaws.	No fatal flaws.	No fatal flaws.	No fatal flaws.	No fatal flaws.
Conclusion	**Technology is a candidate for Phase II review.**	**Technology is a candidate for Phase II review.**	**Technology is a candidate for Phase II review.**	**Technology is a candidate for Phase II review.**	**Technology is a candidate for Phase II review.**

2. Background and Introduction

2.1 Purpose/Scope of Study

This study is performed in accordance with the requirement established by the State Water Resources Control Board (SWRCB) for Southern California Edison (SCE) and Pacific Gas & Electric (PG&E) to conduct a detailed evaluation to assess compliance alternatives to once-through cooling for the San Onofre Nuclear Power Station and the DCPP. This requirement is associated with the California Statewide Policy on the *Use of Coastal and Estuarine Waters for Power Plant Cooling*, which established uniform, technology-based standards to implement the Clean Water Act Section 316(b) that mandates that location, design, construction, and capacity of the cooling water intake structures reflect the best technology available for minimizing adverse environmental impacts.

This report describes the detailed evaluation of five closed-cycle cooling system technologies for DCPP based on the list of site-specific criteria approved by the Nuclear Review Committee. The technologies evaluated were passive draft dry/air cooling, mechanical (forced) draft dry/air cooling system, hybrid wet/dry cooling system, wet natural draft cooling, and wet mechanical (forced) draft cooling. These technologies are described in detail in Section 3. The evaluation process includes critical review of published data and literature, consultation with permitting agencies and technical assessment supported by engineering experience and judgment. Engineering definitions were defined for each of the technologies studied and conceptual design information was used to perform the criteria review for each. This included developing differential operating requirements for each technology option including their power and water requirements and identifying and compiling their industry experience, reliability, and uncertainties. No new field data was collected as part of this effort. The results of the evaluation are used to characterize the feasibility of this technology and its possible selection as a candidate for further investigation in a follow-up phase of this study.

2.2 Regulatory History

2.2.1 Federal

The U.S. Environmental Protection Agency (USEPA) has proposed standards to meet its obligations under the Section 316(b) of the Clean Water Act to issue cooling water intake safeguards. Specifically, this section requires that NPDES permits for facilities with cooling water intake structures to ensure that the location, design, construction, and capacity of the structures reflect the best technology available to minimize the harmful impacts on the environment. These impacts are associated with the significant withdrawal of cooling water by industrial facilities that remove or otherwise impact significant quantities of aquatic organisms present in the waters of the United States. Most of the impacts are to early life stages of fish and shellfish through impingement and entrainment. Impingement occurs when fish and other aquatic life are trapped against the screens when cooling water is withdrawn resulting in injury and often death. Entrainment occurs when these organisms are drawn into the facility where they are exposed to high temperatures and pressures, again resulting in injury and death. (USEPA, 2011)

In response to a consent decree with environmental organizations, the USEPA divided the Section 316(b) rules into three phases. Most new facilities (including power plants) were addressed in the Phase I rules, initially promulgated in December 2001. Existing power plants were subsequently addressed, along with other industrial facilities, in the Phase II version of the rules, issued in February 2004. Since then the rule has been challenged, remanded, suspended, and re-proposed. The current proposed version of the rule dictates that all

existing facilities that withdraw at least 25 percent of their water from an adjacent water body for cooling purposes and have a design intake flow range of 2 million gallons per day (mgd) would be subject to:

- Upper limit on the number of fish killed because of impingement and determining the technology necessary to comply with this limit, or

- Reduce the intake velocity to less than 0.5 feet per second (fps) (through-screen) or below, which would allow most fish to avoid impingement.

Large power plants (water withdraw rates greater than 125 mgd) would also be required to conduct a studies to help their local permitting authorities (SWRCB) determine what site-specific controls (if any) would be required to reduce entrainment mortality impacts. Note this version abandoned the original performance standards approach that mandated the calculation of baseline against, which reduction in entrainment and impingement can be measured.

The Section 316(b) Phase II final rule is expected to be issued on July 27, 2012. When the final rule become effective it is likely to include an implementation timeline that would drive the implementation of technologies to address the impingement requirements within 8 years (2020).

2.2.2 State

The SWRCB is responsible for ensuring compliance with the finalized Section 316(b) rules in California and it has been actively pursuing a parallel path regulatory program that is focused on the state's coastal generating stations with once-through cooling systems including DCPP. The SWRCB's *Use of Coastal and Estuarine Waters for Power Plant Cooling Once-Through Cooling Policy* became effective on October 1, 2010. This Policy established statewide technology-based requirements to significantly reduce the adverse impacts to aquatic life from once-through cooling. Closed-cycle wet cooling has been selected as Best Technology Available.

Affected facilities, including DCPP, are expected to:

- Reduce intake flow (commensurate with closed-cycle wet cooling) and velocity to less than 0.5 fps (through screen) – Track 1, or

- Reduce impacts to aquatic life comparably by other means – Track 2

This policy is being implemented through a so-called *adaptive management strategy* that is intended to achieve compliance with the policy standards without disrupting the critical needs of the state's electrical generation and transmission system. A Nuclear Review Committee was later established to oversee the studies that will investigate the ability, alternatives, and costs for both SONGS and DCPP to meet the policy requirements. This study is direct outgrowth that adaptive management strategy to implement this *California Once-Through Cooling Policy* (Bishop, 2011).

Current Cooling Water Intake System and Section 316(b) Compliance History

DCPP operates a single cooling water intake structure to provide cooling water to Units 1 and 2. Each unit's water withdrawal rate is nominally 867,000 gpm or 1,248 mgd. Cooling water is withdrawn through a shoreline intake structure in a cove partially protected with man-made breakwaters. The inlet structure includes a set of inclined bar racks and traveling screens. A concrete curtain wall extends 7.75 feet below mean sea lev-

el to keep out floating debris. Incoming cooling water travels to one of four separate screen bays (two per unit). Each screen bay is fitted with three rotating vertical traveling screen assemblies with 3/8-inch stainless steel mesh panels. A high-pressure spray wash removes any debris or fish that have become impinged on the screen face into a sump that leads back to the intake cove (Tetra Tech, 2009). In addition, each unit has two auxiliary saltwater trains (one duty and one standby) that perform safety-related functions and each train is served with one auxiliary saltwater pump, rated at 11000 gpm (DCPP, 2009). The auxiliary saltwater pumps for each unit are housed in separate pump bays located near the center of the intake structure, and are serviced by a common 5-foot-wide traveling water screen.

Because of the high flow rate of the once-through cooling water system and intake velocity that exceeds 0.5 fps, the current DCPP cooling water intake structure arrangement is considered to be not effective at reducing impingement mortality and entrainment losses. Consequently, this matter has been the subject of a number of Coastal Commission Regional Water Quality Control Board initiatives that have increasingly focused attention on mitigation of impingement and entrainment impacts via application of potentially viable alternative cooling system technologies.

2.3 Screening Process (A/B Criteria)

The technology screening process for the Phase I portion of the evaluation will be performed using a two-tier criteria (Criteria Set A/B) approach that achieves a technically comprehensive assessment while minimizing the time and effort required. The screening will be initially performed for Set A criteria. If the technology satisfies all of the Set A criteria, it will be evaluated using the Set B criteria.

Set A includes the following criteria that are critical to the screening process:

- External approval and permitting (nonnuclear licensing)
- Impingement/entrainment design
- Offsetting of environmental impacts

All remaining criteria are grouped into Set B criteria, which are shown below:

- First-of-a-kind to scale
- Operability of general site conditions
- Seismic and tsunami issues
- Structure
- Construction
- Maintenance

During the screening process, if any criterion cannot be met, the screening process is suspended\, and a summary report for that technology is then prepared.

3. Technology Description

3.1 Background

The steam that drives the main turbine in a large electric power plant is condensed and cooled by large quantities of water that is circulated through a surface condenser. The circulating water then transfers that heat to the general environment, either directly or indirectly through another heat transfer process.

The direct method is a once-through cooling system, where the circulating water is pumped from a large source such as the ocean, a river or a lake, through the surface condenser and returned to the source, where the heat is dissipated. The entire volume of cooling water is supplied from and discharged continuously to the water source. The indirect method is a closed-cycle system, where the circulating water is pumped from its own reservoir through the surface condenser, then through a cooling medium (such as a cooling tower or heat exchanger) where the heat is transferred to the environment, then back to the reservoir. A closed-cycle system uses much less water than the once-through cooling, as the volume of cooling water is continuously recirculated through the system with makeup from a source (for example, ocean or other water source) supplied only as required to replenish losses to the environment (for example, through evaporation in a cooling tower) and to control the water chemistry in the system. However, use of a closed-cycle system results in lower plant cycle efficiency because the cooling water (heat transfer medium) is recirculated and the water is going to have a higher overall temperature than the cooling water used in a once-through system. The closed-cycle can use either wet or dry cooling methods for cooling, or a hybrid wet/dry cooling method, which is a combination of both wet and dry methods.

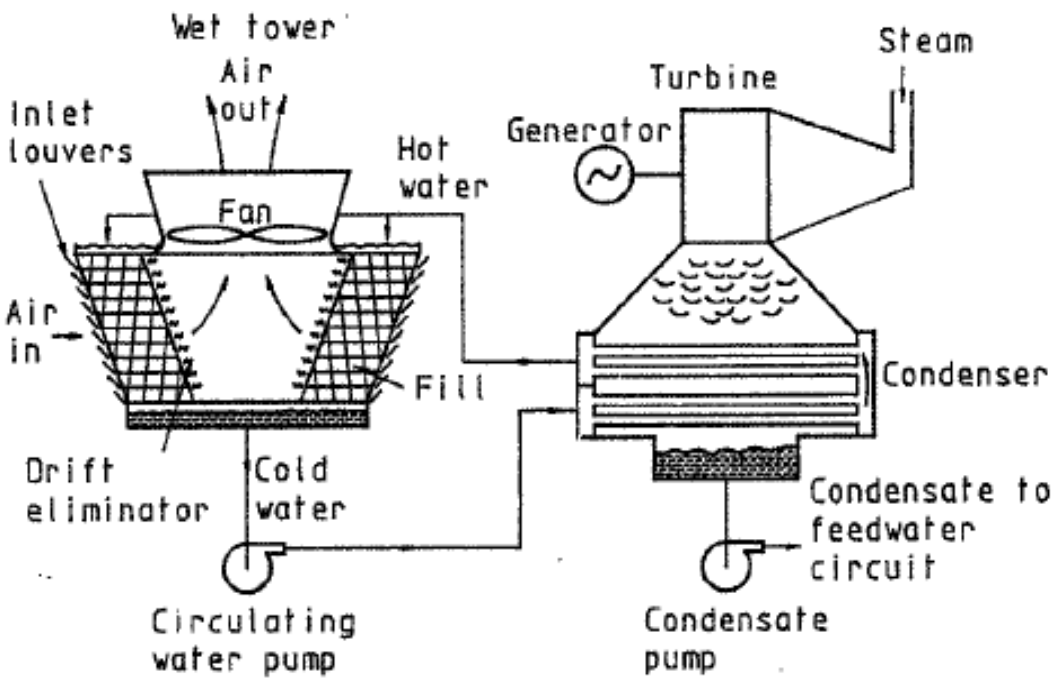

Figure CC-1. *Sample Closed-Cycle System Using a Wet Mechanical (Forced) Draft Cooling Tower* (Kroger, 2004)

In addition to the thermal requirements associated with condensing the turbine steam, additional cooling is required for other processes and components in the plant that support the primary function of generating electricity. All of these requirements, collectively, define the overall heat removal requirements for a power plant.

DCPP was designed for and operates with once-through cooling systems for both DCPP units. This study evaluates five typical alternative closed-cycle system heat transfer technologies for possible application to meet the DCPP cooling requirements. These technologies were investigated due to their ability to satisfy the requirements of the Section 316(b), *California Once-Through Cooling Policy*, Phase II. This is because the dry technologies will only require minimal makeup to account for system leaks/losses after the closed system is initially charged and the only water sources that will be available for the wet technologies are freshwater and reclaimed water because there are fatal flaws associated with the use of seawater for the wet technologies, which is described in Section 4 of this report. The freshwater and reclaimed water sources are assumed to be available either from wells or piped in from nearby water treatment facilities. The only significant continuous makeup that will be required from the ocean for any of the closed-cycle options will be what is required to support any safety-related systems, which were not evaluated as part of this phase of the study.

The five technologies evaluated are:

- Passive Draft Dry/Air Cooling
- Mechanical (Forced) Draft Dry/Air Cooling
- Wet Natural Draft Cooling
- Wet Mechanical (Forced) Draft Cooling
- Hybrid Wet/Dry Cooling

Five experienced manufacturers of both wet and dry cooling systems provided input on conceptual designs for each of these technologies based on specific site design criteria. Bechtel also had discussions with each regarding the applicability and technical feasibility of the technologies to meet the needs of the DCPP plant. The manufacturers that provided input were Evaptech, Inc. (ET), GEA Power Cooling, Inc. (GEA), Hudson Products Corporation (Hudson), International Cooling Tower, Inc. (ICT), and SPX Cooling Technologies, Inc. (SPX).

For each of the technologies described, there are several design variations available. Examples include forced (located at air inlet) or induced (located at air outlet) draft fans for the mechanical draft technologies, heat exchanger configuration for the dry technologies, and cross- and counterflow wet tower configurations. Detailed evaluation of which variation is optimum for DCPP will be carried out in the next phase of this study and so many of the variations available are all described in the technology descriptions below.

3.2 Dry/Air Cooling

Dry/air cooling systems cool fluids circulated inside of finned tube heat exchangers using conduction, convection and radiation (sensible heat) to remove heat from the fluid. The heat is transferred to ambient airflow that is induced over the finned tubes by either natural or mechanical draft means. No evaporation of the cooling water is involved and the dry cooling performance is related to the ambient air dry bulb temperature. Dry technologies result in higher cooling water temperatures and thus higher turbine backpressure and decreased generator output as compared to wet technologies. This situation is always the case because the dry bulb temperature (wet bulb temperature) is always higher than the wet bulb temperature, which governs the cold water temperature achievable with wet cooling designs, described in Section 3.3. Additionally, dry technologies require greater heat transfer surface area and greater airflow since they do not use the more efficient evaporative cooling process. The advantages of dry systems over wet include minimal makeup water usage and the absence of issues associated with wastewater disposal, drift emissions, and visible plume formation.

There are dry technologies known as air-cooled condensers that condense steam from the turbine generator directly using ambient air. This requires the exhaust steam from the turbine to be ducted to the location of the

air-cooled condenser. Due to the available locations that could accommodate the large air-cooled condensers required for DCPP, the steam duct would exceed the length recommended by air-cooled condensers manufacturers. The estimated duct lengths for the site would result in a pressure drop so great that the turbines could not operate because of the resulting backpressure at the exhaust.

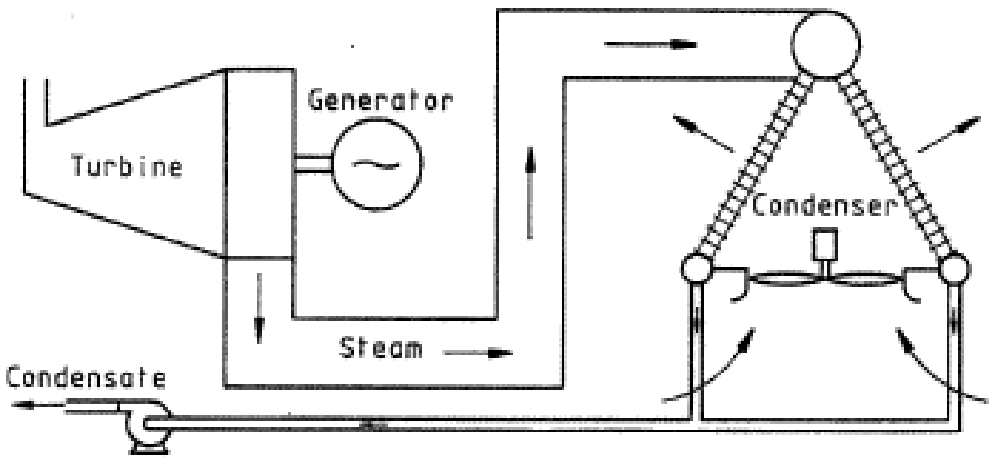

Figure CC-2. *Sample Air-Cooled Condensers (Kroger, 2004)*

For this reason, the dry technologies considered in this study are air-cooled heat exchangers, where the turbine steam would still be condensed in the surface condenser and the circulating cooling water is pumped in a closed-cycle from the condenser to the air-cooled heat exchangers. The water is circulated in a closed system inside the heat exchanger tubes, which are available in various grades of materials to accommodate use of a variety of water qualities. Any available water at DCPP would be acceptable to use with the dry technologies because only minimal makeup is required, and there are no water loss emissions associated with their use, as described further in Section 4.

There are two dry cooling technologies: passive draft and mechanical draft. The specific names for these technologies vary by manufacturer.

3.2.1 Passive Draft Dry/Air Cooling

In a passive draft dry/air cooling system, the air-cooled finned tubes are arranged in a shell that is usually hyperbolic in shape. The tower is designed to use convection to dissipate the heat from the tubes to the air flowing over them, with the airflow driven by the difference in air temperature and density between the inside and the outside of the tower. The finned tubes are grouped in bundles and can be arranged in various configurations at the base of the tower or stacked inside the tower.

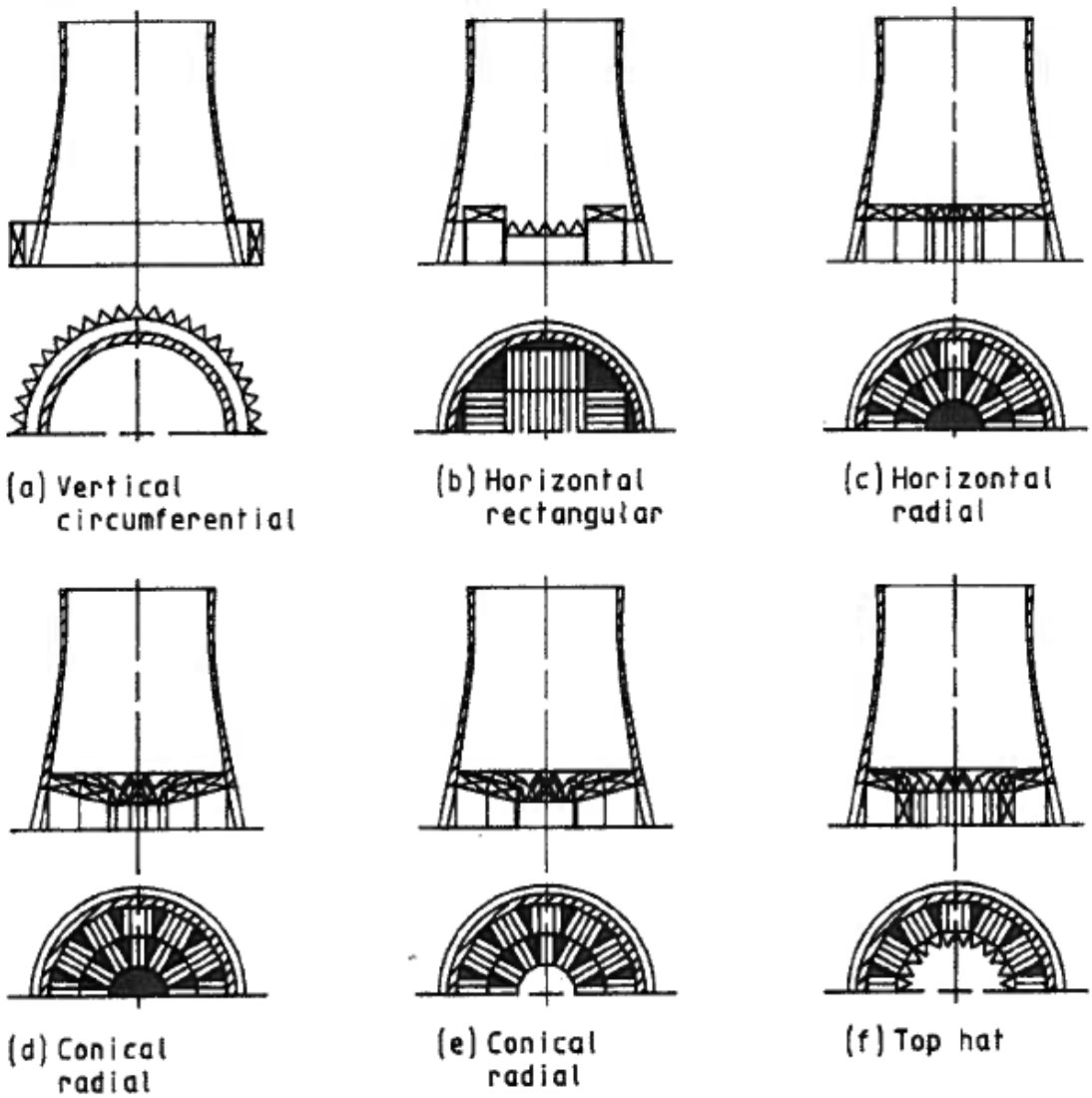

Figure CC-3. *Sample Heat Exchanger Configurations for Passive Draft Dry/Air Cooling Towers (Kroger, 2004)*

A Heller system couples a passive draft dry/air cooling tower with a spray condenser (more efficient than a surface condenser) and a recovery turbine to maximize the turbine generator output to the fullest extent. For this reason this is the type of passive draft dry/air cooling system considered in this report.

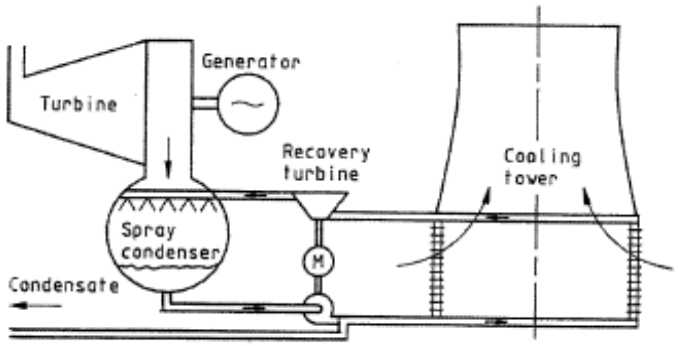

Figure CC-4. *Sample Heller System (Kroger, 2004)*

The passive draft dry/air cooling tower is less expensive to operate than a comparably sized mechanical draft cooling tower due to the lack of mechanical equipment (fans and motors) required to induce airflow over the finned tubes. To create the required draft, the tower must be very tall resulting in a higher installed cost than mechanical draft towers, but there are operational cost savings associated with the fact that there are no fans and thus no power requirements and maintenance activities associated with them.

Based on the design requirements for the site, which are described in detail in Section 4.5, three natural draft towers per unit (six total for the site) are needed to support DCPP operation. The towers will be approximately 610 feet in diameter and approximately 587 feet tall. The towers will need to be spaced approximately a diameter distance apart to avoid the hot discharge from one tower negatively impacting the performance of a nearby tower (known as interference) or to avoid any of the towers being starved of required incoming airflow. Consequently, the most plausible location for the cooling towers are to the north of the plant, as depicted in the conceptual plot plan and described in Section 4.8. It has to be noted that these towers can not fit within the boundaries of the Owner-controlled area. The system will not require substantial makeup water, only potentially a small amount to make up for system losses. This water could be supplied by seawater from the current intake structure from the Pacific Ocean, or fresh or reclaimed water from wells or a nearby water treatment facility.

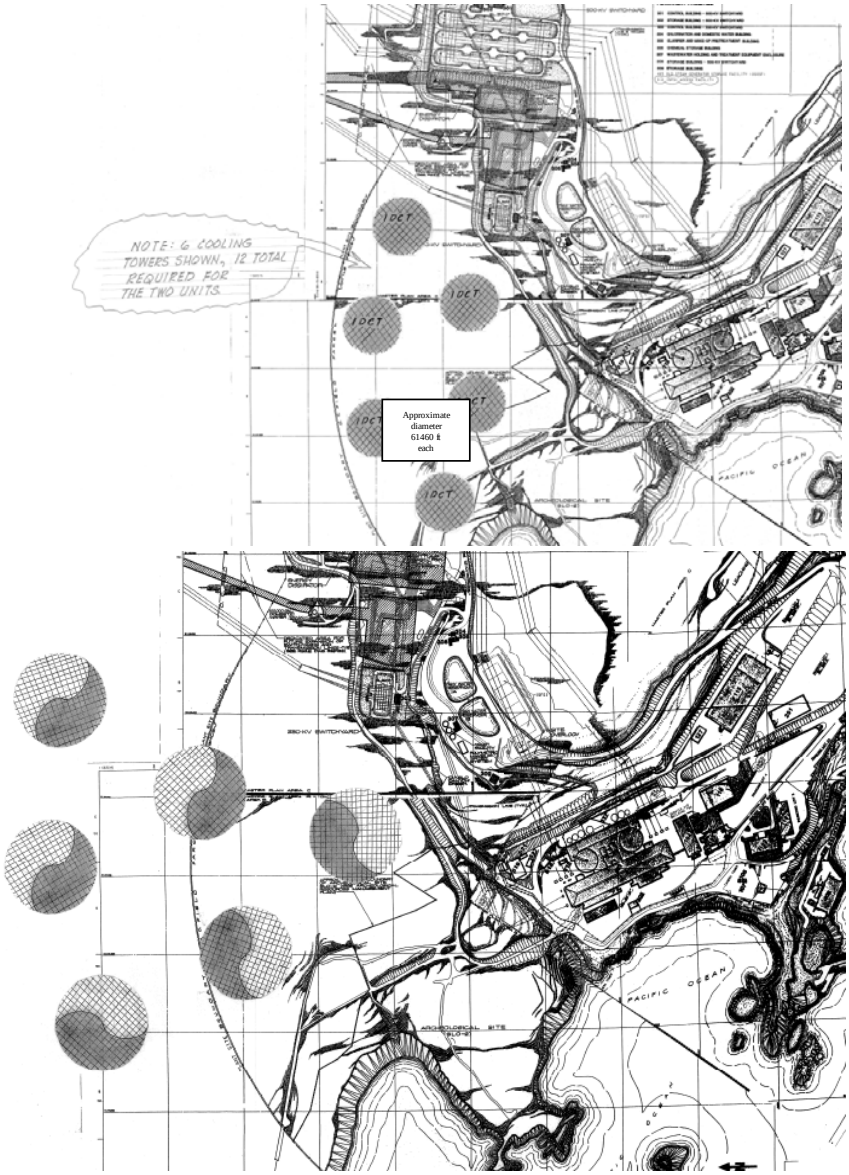

Figure CC-5. *Conceptual Plot Plan Passive draft dry/air Cooling*

3.2.2 Mechanical (Forced) Draft Dry/Air Cooling

A mechanical (forced) draft dry/air cooling tower also removes heat from the circulating water in air-cooled finned tubes, but relies on fans to drive the airflow over the tubes. This tower does not require a large shell. The finned tubes are bundled and installed in varied arrangements, but often in a horizontal rectangular array to maintain a lower profile. This is the configuration that was considered for DCPP. The fans can be located

on the air inlet side of the tube bundles (forced draft) or on the air outlet side of the tube bundles (induced draft) and they can be designed to regulate the airflow based on changing atmospheric conditions.

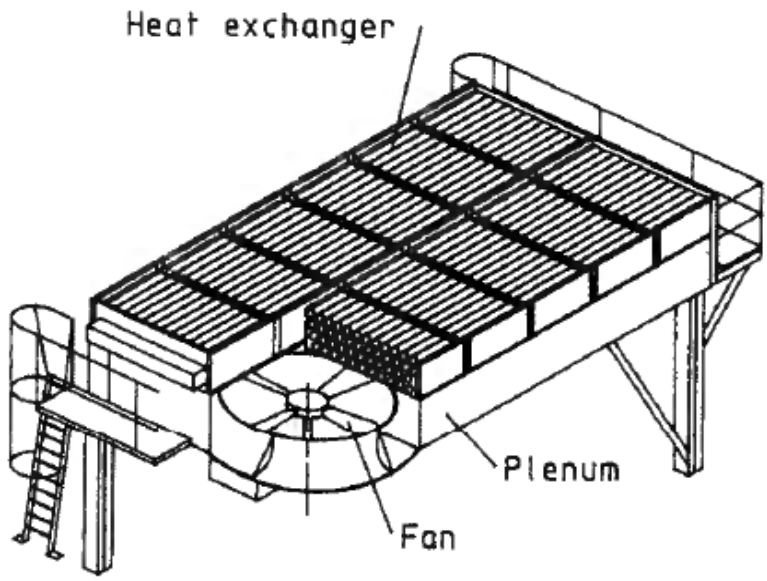

***Figure CC-6**. Sample Forced Draft Mechanical (Forced) Draft Dry/Air Cooling Tower (Kroger, 2004)*

These types of dry towers can have a lower profile and can achieve lower cold water temperatures than passive draft dry/air cooling since the airflow quantity is externally controlled. However, these designs produce noise from the fans and these fans require considerable auxiliary power for operation. Special equipment and features can be incorporated into the design of any mechanical draft technology to limit the noise (such as wide chord, low noise fan designs). These optional features would, consequently, result in additional cost and increased power requirements for the tower.

To dissipate the required heat loads for the site, the mechanical (forced) draft dry/air cooling would require approximately 1,208,400 square feet of heat exchanger area per unit and 52,700 hp (39.3 MW) input power per unit to run the fans. The only plausible location for the cooling towers are to the north of the plant, as depicted in the conceptual plot plan and described in Section 4.8. It has to be noted that these towers can not fit within the boundaries of the Owner-controlled area and additional land would need to be acquired to accommodate use of this technology.

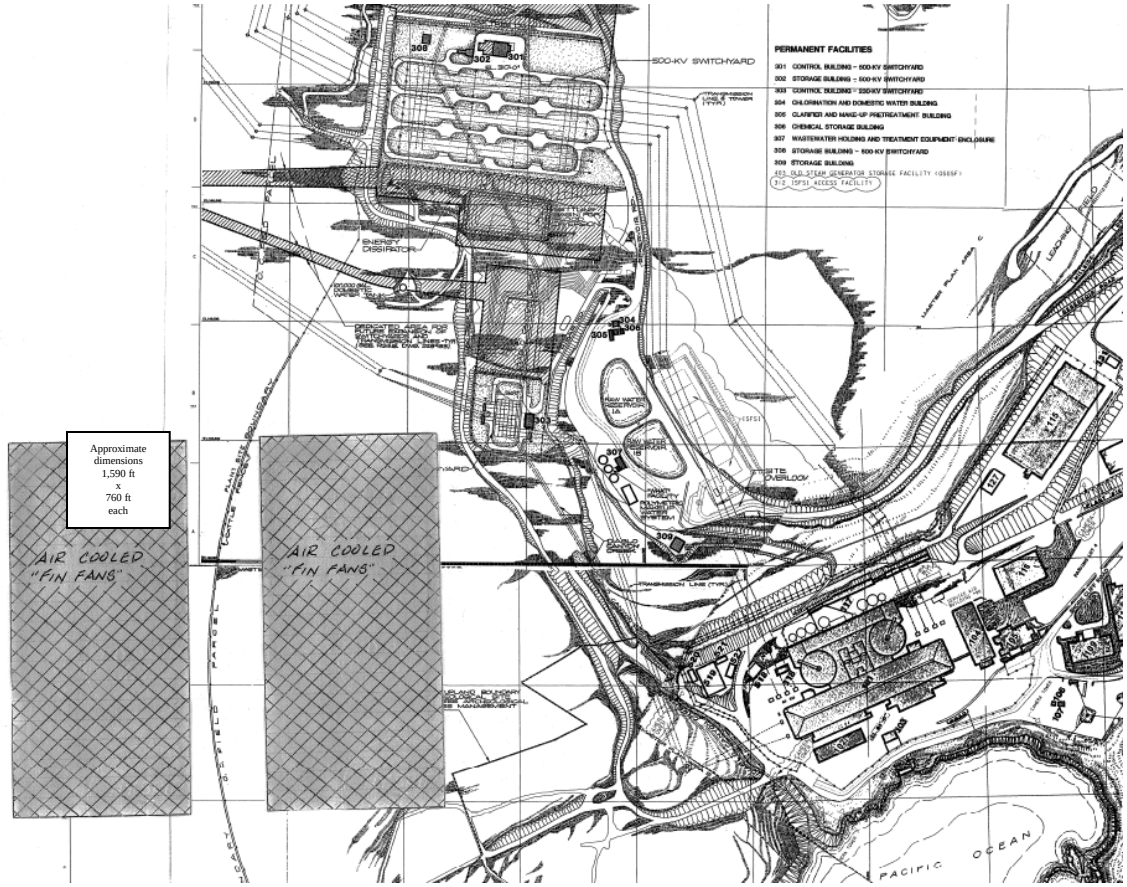

Figure CC-7. Conceptual Plot Plan Mechanical (Forced) Draft Dry/Air Cooling Towers

3.3 Wet Cooling

In a wet cooling system, the circulating water is cooled primarily by evaporation (latent heat transfer) when it is brought into direct contact with air in a cooling tower. Wet cooling towers use water nozzles to break the water into the smallest droplets possible and then employ fill packs to either break the water into smaller droplets (splash-type fill) or cause them to spread into a fine film (film-type fill) depending on fill type used. These actions allow the greatest water surface area possible to be exposed to the cooling air and maximize the time the water and air are in contact, facilitating maximum heat transfer. Evaporation is an effective means of cooling, and thus much less heat transfer area (smaller towers) is required for wet technologies compared to dry types.

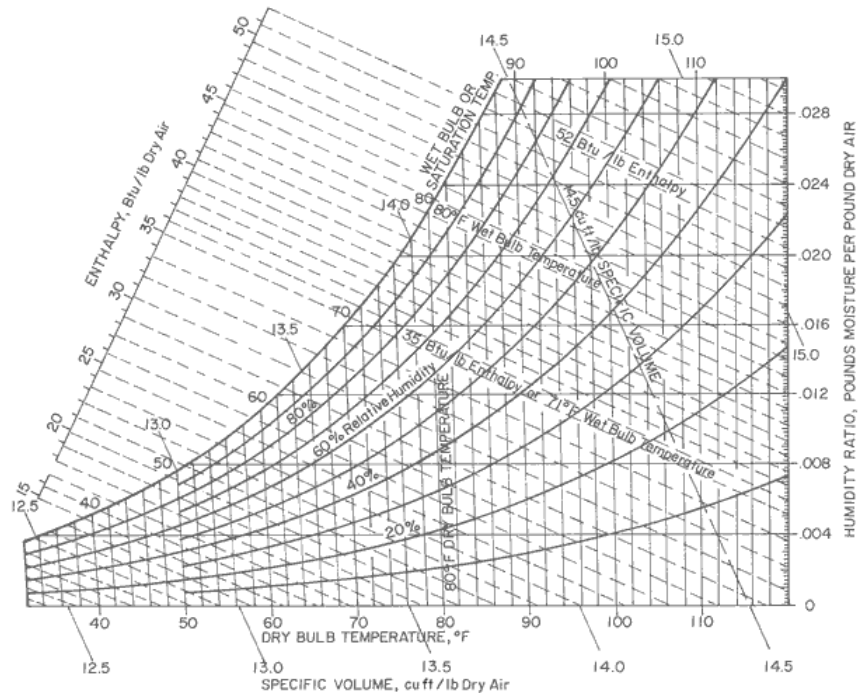

Figure CC-8. *Psychrometric Chart*

A psychrometric chart illustrates the fact that lines of constant wet bulb temperature are parallel to lines of constant enthalpy, whereas lines of constant dry bulb temperature have no fixed relationship to enthalpy. Therefore, wet bulb temperature governs the performance of wet cooling towers and theoretically, the lowest cold water temperature achievable is the ambient wet bulb temperature. However, because of inefficiencies in the cooling process, the cold water temperature will not be cooled to equal the wet bulb temperature. Approach is defined as the difference between the cold water temperature leaving the cooling tower and the wet bulb temperature. The closer the wet bulb is approached, the larger and more expensive the cooling tower becomes, but the more efficiently the power plant operates. The lowest approach achievable depends on whether mechanical draft or natural draft towers are used. Given the requirements of DCPP, cooling tower manufacturers contacted indicated that an approach of 9°F is achievable with mechanical draft towers and an approach of 12°F is achievable with natural draft towers.

The wet cooling method results exhaust air being saturated with water (the water evaporated into the subsaturated air as part of the cooling process). Depending on ambient weather conditions this saturated exhaust air can recondense as it is discharged to the atmosphere and be visible as a plume. The plume can be significant under certain ambient temperature, humidity and wind conditions, and may appear as a continuous, thick cloud for hundreds of feet in the air and miles away from the tower. The severity and frequency of visible plume was not quantified for each of the various wet technologies as part of this phase of the study, but detailed analysis will be performed as part of Phase 2 to allow full evaluation of the level of hazard this plume will present.

Makeup water is required to compensate for evaporation, blowdown, and drift losses from the cooling tower. Blowdown is the term applied to the water that is discharged from the system to control concentration of impurities in the circulating water (for example, salt if ocean water is used). Drift is the water lost from the system as liquid droplets entrained in the air stream exiting the tower. Evaporation losses are essentially pure

water (contaminants are left behind when the water evaporates), but the drift droplets will contain all of the solids and other chemical constituents present in the circulating water. Therefore, the drift droplets are classified as an air emission source and are subject to air permit considerations. The drift loss from the wet technology types can be limited to 0.0005 percent of the total circulating water flow rate with the application of drift eliminators installed in the towers. Circulating water pH, scale/corrosion, and biological growth are controlled with the addition of specialty treatment chemicals.

Use of wet cooling towers at DCPP will require approximately 21,800 gpm of makeup water per unit. This number was determined by assuming that the circulating water system would be run at the highest cycles of concentration allowable while adhering to the available PM-10 emission offsets for DCPP. Running the tower at the highest cycles of concentration possible minimizes the makeup requirements to the fullest extent, but maximizes the negative environmental impacts from the drift. The source of cooling water for the wet and hybrid wet/dry cooling technologies would be an offsite water source (such as reclaimed or freshwater) because the available PM-10 offsets are insufficient to support tower operation using saltwater. This is described further in Section 4.3.

There are two wet cooling technologies: passive draft and mechanical draft. The specific names for these technologies vary by manufacturer. For each of these types, there are different configurations available for the orientation of the cooling tower internals (cross- and counterflow arrangements).

For this study, all of the wet technology towers are assumed to be located on the undeveloped mountainous area to the north of the nits, within the Owner-controlled area as depicted in the conceptual plot plan below. Previous studies sited rectangular towers on the site area south of the reactor buildings, assuming that the buildings and parking lots currently in this area could be relocated. Spacing the towers close enough together to allow them to fit in this location would result in a high probability of increased recirculation and interference between the towers and substantial negative impacts to tower performance. Additionally, this area is full of plant facilities and utilities both above and below ground and the units may not be able to operate while all of these are relocated and modified. If the towers are constructed to the north as shown below, they could be sited favorably with respect to each other (maximizing the potential for the best performance from each) and they could be completely constructed without affect on operation of the plant, significantly shortening the required outage to perform condenser work and tie-ins.

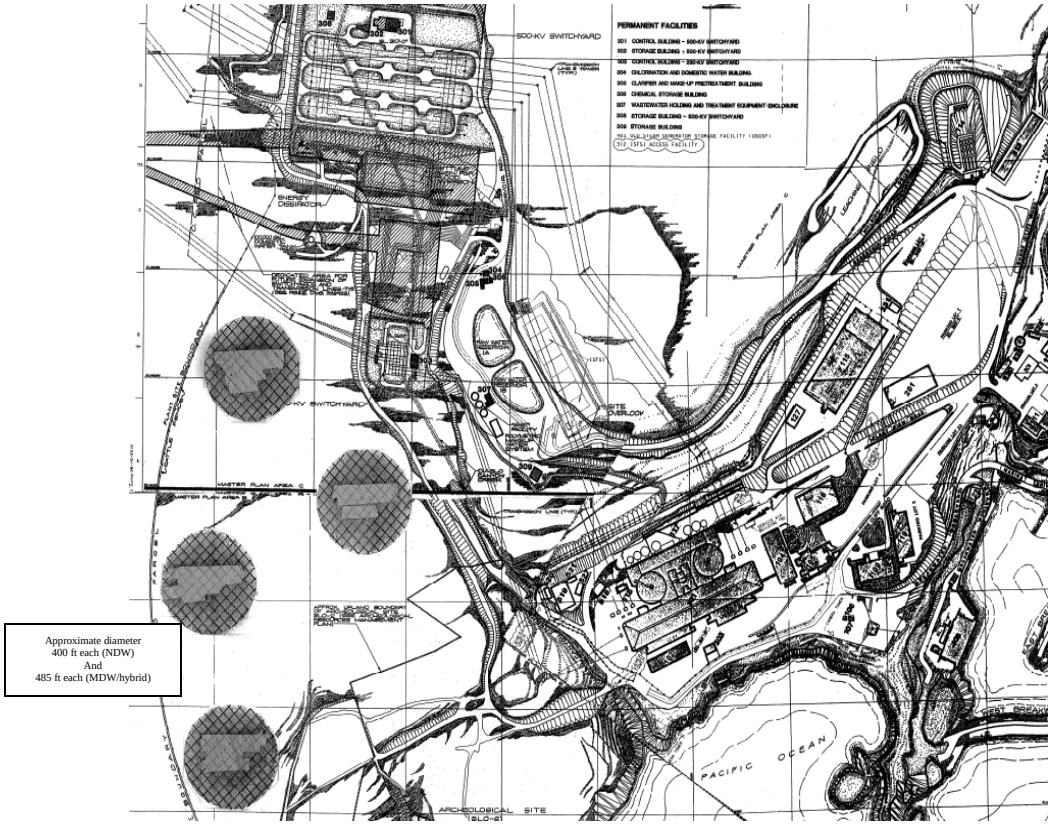

Figure CC-9. *Conceptual Plot Plan for Wet Closed-Cycle System Technologies*
Wet Natural Draft Cooling, Wet Mechanical (Fixed) Draft Cooling, Hybrid Wet/Dry Cooling

3.3.1 Wet Natural Draft Cooling

The wet natural draft cooling tower includes tower components (fill, nozzles, drift eliminators) that are contained inside of a shell that can be either steel or concrete. The shell induces a *chimney effect* to create the required draft for cooling. A density difference exists between the ambient air and the air inside of the cooling tower shell above the tower internal components (where the air is hotter and less dense) and this difference induces airflow through a natural draft tower.

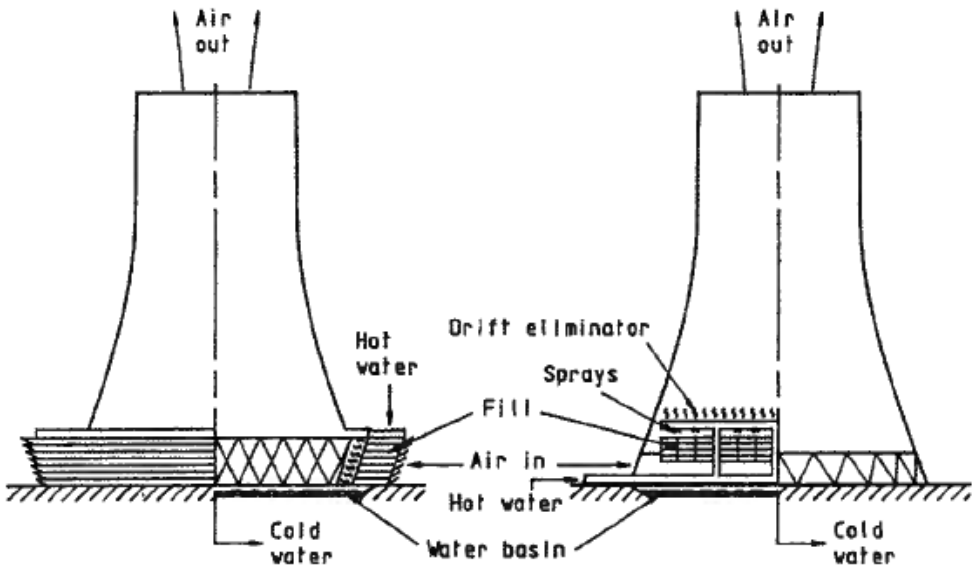

Figure CC-10. *Sample Wet Natural Draft Cooling Tower Schematics (Cross- and Counterflow Internals Configurations)(Kroger, 2004)*

DCPP would require approximately two wet natural draft cooling towers per unit, each approximately 400 feet in diameter and 600 feet tall. The only plausible location for the cooling towers are to the north of the plant, as depicted in the conceptual plot plan and described in Section 4.8.

3.3.2 Wet Mechanical (Forced) Draft Cooling

Wet mechanical draft cooling towers use the evaporative wet cooling process, with multiple fans to move the air through the tower. There are both round and rectangular shapes available for the wet mechanical (forced) draft cooling towers.

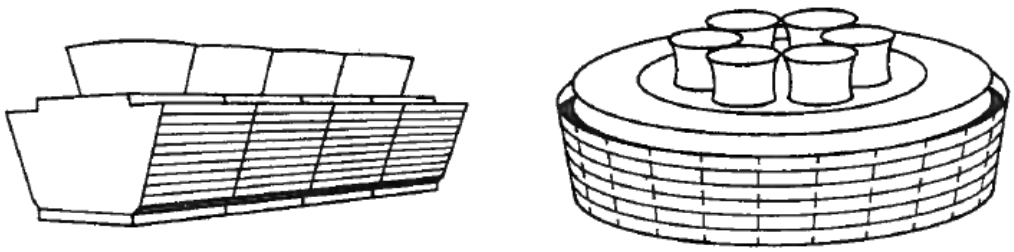

Figure CC-11. *Sample Wet Mechanical (Forced) Draft Cooling Configurations Rectangular In-Line (Left) and Round (Right) (Kroger, 2004)*

For the DCPP site, round towers were considered because this design can maximize the thermal performance because the potential for recirculation is reduced. Recirculation is a phenomenon that occurs when the hot exhaust air leaving a cooling tower is recirculated and reenters the air inlets of the tower. This increases the temperature of the entering air and thus, increases the temperature of the cold water. The possibility for recirculation increases when a low-pressure region is created on the downwind side of cooling tower (this occurs with rectangular configurations), and when tower exhaust air velocities are relatively low. In addition, round towers are typically capable of handling higher heat loads using less land area equivalent than rectangular towers.

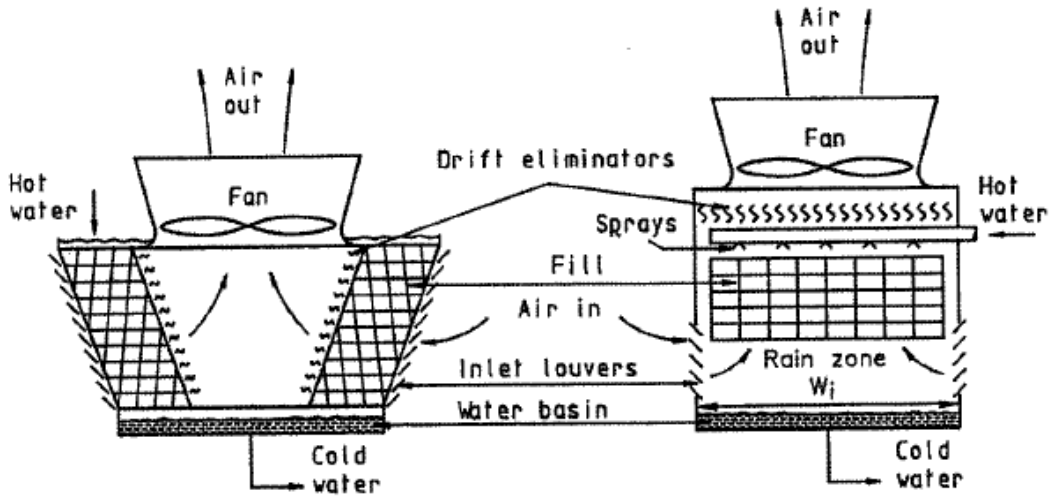

Figure CC-12. *Sample Wet Mechanical (Forced) Draft Cooling Tower Schematics (Cross- and Counterflow Internals Configurations (Kroger, 2004)*

Two round wet mechanical (forced) draft cooling towers per unit approximately 485 feet in diameter and 125 feet in height would be necessary to achieve the desired performance at DCPP. Approximately 32 fans would be needed per tower with a total fan input power requirement of 19,200 hp (14.4 MW) per unit. The only plausible location for the cooling towers are to the north of the plant, as depicted in the conceptual plot plan and described in Section 4.8.

3.4 Hybrid Wet/Dry Cooling

The hybrid wet/dry cooling tower technology considered in this study is the combination of the wet tower and a dry heat exchanger. Hybrid wet/dry cooling towers are slightly taller than comparable wet towers due to addition of the *dry* section. This dry section abates the visible plume because after the plume leaves the lower *wet* section of the tower, it travels upwards through a dry section where heated and relatively dry air is mixed with the saturated air in a proportion that results in a mixed discharge air stream that is not at conditions that result in visible plume. This design can also result in slightly reduced evaporative losses as compared to an all wet cooling tower because the dry section can dissipate some of the thermal load without using evaporation (for example, conductive, convective, and radiative heat transfer takes place in the dry section finned tubes). These tower systems result in greater capital and operating and maintenance costs because of the extra equipment associated with the dry section. However, hybrid towers would offer a great advantage to DCPP since they provide the benefit of efficient wet cooling without the visual impact of plume and they are much lower in profile than natural draft towers.

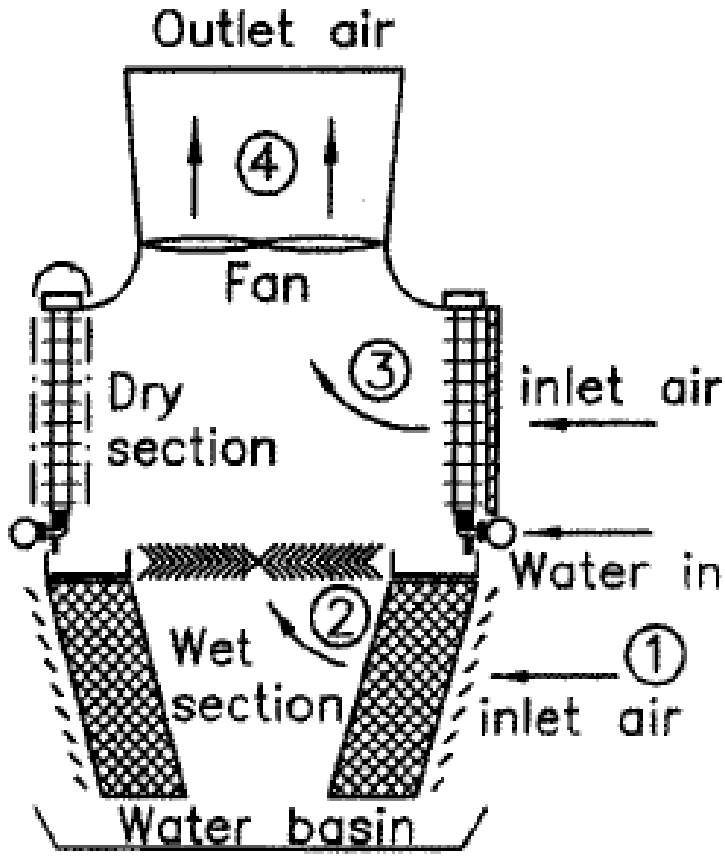

Figure CC-13. *Sample Hybrid Wet/Dry Cooling Tower Schematic (Kroger, 2004)*

Taking into consideration the thermal and realistic plume free requirements at DCPP, a hybrid wet/dry cooling system would need to consist of two round forced-draft towers per unit. A schematic of this tower type is included below. Each tower has an overall diameter of approximately 485 feet and 175 feet tall. The only plausible location for the cooling towers are to the north of the plant, as depicted in the conceptual plot plan and described in Section 4.8. Over 60 fans per tower using a combination of 200 hp and 300 hp would be required to provide airflow over both the wet and dry sections. The collective fan power requirement would reach approximately 32,000 hp (23.8 MW) per unit. When the plume abatement equipment is in operation, the evaporative rate of a hybrid wet/dry cooling tower is less than that of one operating wet tower. This is because the process used to reduce plume visibility results in some recondensation of the water droplets that had been evaporated into the exiting air stream. The makeup water requirement for the hybrid wet/dry cooling towers considered in this study is approximately 19,620 gpm per unit. This would need to be supplied by either a fresh or reclaimed water source. The existing once-through intake structure on the ocean would not be used to supply this makeup

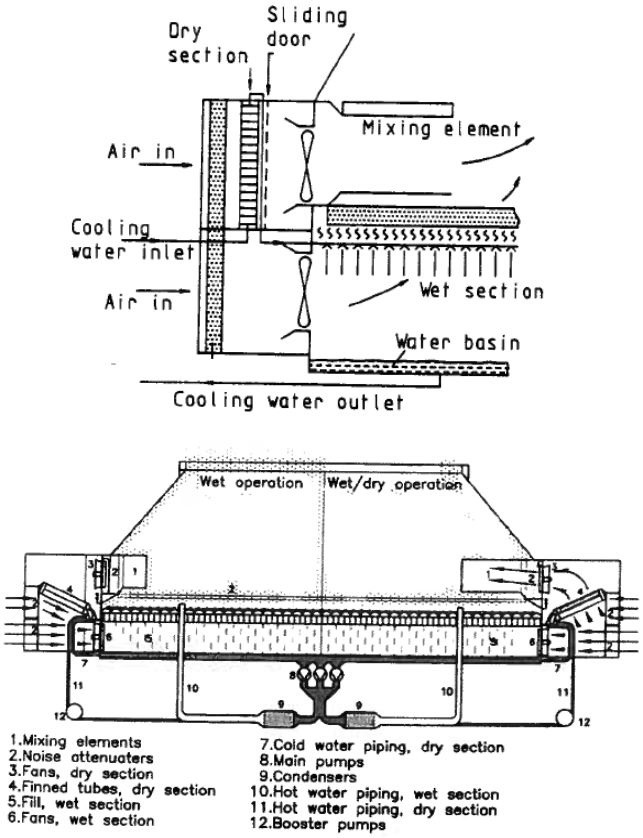

***Figure CC-14**. Sample Round Configuration Hybrid Wet/Dry Cooling Tower Schematic (Kroger, 2004)*

Parameter	Passive Draft Dry/Air Cooling	Mechanical (Forced) Draft Dry/Air Cooling	Wet Natural Draft Cooling	Wet Mechanical (Forced) Draft Cooling	Hybrid Wet/Dry Cooling
Number of towers required	6	2	4	4	4
Area Required per Tower, ft²	292,246.7	1,208,400	125,664	184,745	184,745
Total Area Required (for all towers, including required spacing in between), ft²	6.618 million	3.004 million	1.629 million	2.647 million	2.647 million
Overall height, ft	587	103	600	125	175
Makeup requirement per unit, gpm	Insignificant	Insignificant	21,800	21,800	19,620
Fan power requirement per unit, hp	0	52,700	0	19,200	32,000
Fan power requirement per unit, MW	0	39.3	0	14.4	23.8

Note again that all of the sizing and power requirements for the various technologies provided in this Section are approximate based on preliminary discussions with several cooling system manufacturers. The values above may vary depending on the final manufacturer chosen to supply towers for the site. Additionally, these numbers may change if the design requirements for the towers (described in Section 4.5) are modified during detailed design and optimization of a closed-cycle system for DCPP.

4. Criterion Evaluation

4.1 External Approval and Permitting

4.1.1 General Discussion

The external approval and permitting assessment focused on identifying the applicable (required) permits and approvals for construction and operation of the various closed-cycle cooling system technologies under consideration, as described in Section 3.

This initial assessment effort focused on developing a comprehensive list of potentially applicable permits and approvals at the federal, California, county, and municipal level (as applicable) for the passive air-cooled draft cooling tower system based on saltwater, freshwater, and reclaimed water.

The applicability of each permit/approval to this closed cooling system and water supply option was evaluated. Those permits and approvals that were deemed applicable were subsequently scrutinized to characterize the expected duration and complexity of the regulatory review process. Special attention was directed to identifying environmental impact issues or criteria that would preclude the permit or approval from ever being issued or granted. That is, the focus was to screen each applicable permit or approval for fatal flaws in the associated regulatory review process that would preclude the closed cooling system from further consideration.

The assessment also focused on identifying the critical path (longest duration) initial preconstruction permitting processes, that is, those that support site mobilization, physical site access, initial earthwork/foundations for the passive air-cooled draft cooling system option. The duration of the permitting and the approval process, while not a definitive fatal flaw, could later serve as a screening tool if combined with specific schedule limitations.

Permits and approvals, which support later stages of construction and operation that are not critical path to the commencement of construction, were also included in the assessment since these items could pose significant operational constraints to future DCPP operations.

4.1.2 Detailed Evaluation

This summary list of permits provided the basis for subsequent discussions with key relevant regulatory authorities regarding the applicable permit application needs and the permit review time frames. These discussions were also critical for the identification of potential regulatory or permit-related barriers to implementation—fatal flaws.

The following regulatory authorities were contacted:

- U.S. Army Corps of Engineers (USACE)

- California Public Utility Commission (CPUC)
- California Coastal Commission (CCC)
- California State Lands Commission
- State Water Resources Control Board (SWRCB)
- Central Coast Regional Water Quality Control Board (CCRWQCB)
- San Luis Obispo Air Pollution Control District (APCD)
- San Luis Obispo County

The following sections describe the relevant key permitting/approval processes for the closed cooling system and water supply options. The results are summarized in Tables CC-3 through CC-12 (one for each water supply option) that lists the applicable permits and approvals, determines the critical path review processes and most importantly, highlights those processes that may be fatally flawed.

4.1.2.1 Dry Cooling Technologies - Passive Draft Dry/Air and Mechanical (Forced) Draft Dry/Air

Both passive draft dry/air cooling and mechanical (forced) draft dry/air cooling options will be situated on a sloped portion of unoccupied land north of the power block area and an adjacent area outside of the existing DCPP property boundary. Both areas are north of Diablo Creek. The passive draft dry/air cooling option will require 12 tall passive draft dry/air cooling towers. The mechanical (forced) draft dry/air cooling option will add two large rectangular (1590 feet by 760 feet), relatively low-profile mechanical draft dry/air towers.

There will be no visible plume from these towers. Water sources to the both tower systems will include saltwater, freshwater and reclaimed water. The water withdrawal intake system for the saltwater option will require some limited marine work to the existing once-through system intake system. Freshwater will come from a new system of onsite wells or be supplied from undefined external sources that are made available at the site boundary. The reclaimed water option will depend on water coming treated effluent from wastewater treatment facilities in the area via pipeline. For the purposes of this evaluation, this water source is also assumed to be available at the site boundary. The specific permits associated with external sources of freshwater and reclaimed are beyond the scope of this initial assessment, but may be the subject of subsequent evaluations.

U.S. Army Corps of Engineers

The USACE is the lead agency for Clean Water Act Section 404 and Section 10 permitting processes, which are focused primarily on impacts to waters of the United States and waterborne navigation. While the passive draft dry/air cooling system is expected to pose limited construction impacts to USACE jurisdictional waters, this cooling tower option will likely involved USACE permitting – at least for the saltwater source option. The freshwater and reclaimed water supply options will likely not involve work in jurisdictional waters, unless the associated pipelines cross such areas. The impact of those offsite impacts are not addressed in this evaluation.

For minor impacts the USACE has established a general permit program (nationwide permit) for a host of less significant work processes involving waters of the United States. So it is possible that the passive draft dry/air cooling and mechanical (forced) draft dry/air cooling saltwater towers options could use nationwide permit process. If the marine work associated with these dry cooling tower options exceeds that threshold allowed by the nationwide permit or is otherwise deemed significant, then the individual Section 404/10 permit process is mandated.

While individual Section 404 permit review periods can often be lengthy, the USACE representative for the DCPP area explained that all USACE facilities have goal to issue an individual Section 404 permit within

120 days of deeming the associated application complete (Lambert, 2012). This period is a goal, not a statutory commitment. Consequently, in many cases this goal is not realized. These delays are often associated with the mandated consulting processes that need to be pursued with the State Historic Preservation Office, U.S. Fish and Wildlife Service or National Marine Fisheries Service. In other cases there are extensions of public notice periods or scheduling complications for the public hearing. The applicant for the Section 404/10 permit has to directly pursue consultations with California Coastal Commission (CCC) and SWRCB. Receipt of an individual Section 404 permit is contingent on previous receipt of permits from the CCC and SWRCB.

This difficult process is impeded further by the under staffed local USACE offices (two to three permit writers), so permit review durations have been getting longer. For the more complex and contentious situations, the permitting process can extend to 1–2 years. Hence, the USACE permits are often characterized as the critical path permitting process.

Despite the potential for review periods longer than the 120 day target, the USACE did not see any barriers or fatal flaws regarding the Section 404 permitting process for near-shore marine work associated with changes to the existing saltwater intake system. (Lambert 2012) The freshwater and reclaimed water supply options for the passive draft dry/air cooling and mechanical (forced) draft dry/air cooling systems are assumed to be available at the property boundary and so do not pose any immediate or significant concerns at this stage of the assessment.

California Public Utility Commission

DCPP is regulated by the California Public Utility Commission (CPUC), which is charged with overseeing investor-owned public utilities. San Luis Obispo County may share the role of lead agency for the CEQA review process with the CPUC. CEQA is regulatory statute, which requires state or local regulatory agencies to identify, assess, avoid or otherwise mitigate the significant environmental impacts from the proposed action – the addition of new cooling system technology.

The proposed addition of these significant tower systems will likely trigger preparation of Environmental Impact Report. The Environmental Impact Report is a detailed report that identifies the potentially significant environmental effects the project is likely to have; identifies feasible alternatives to the proposed project; and indicates the ways in which significant effects on the environment can be mitigated or avoided. This Environmental Impact Report will also be used by other state agencies to support their respective review and approval processes.

Following finalization of the Environmental Impact Report, the CPUC will evaluate whether to certify CEQA compliance. This certification then supports their subsequent decision regarding whether the costs associated with the new cooling system can be reclaimed via a consumer rate base adjustment.

While the CPUC-sponsored review process and decision regarding cost recovery will likely be a lengthy, complex and contentious process, there are no definitive environmental barriers, which preclude successfully completion of the CEQA review and a positive record of decision.

California Coastal Commission

The CCC has a broad mandate to protect the coast resources of California, which include the DCPP facility and any related site where the passive draft dry/air cooling and mechanical (forced) draft dry/air cooling towers could be sited. Consequently, the CCC's environmental concerns address a broad range of subject matter

include visual resources, land and marine-based biological resources, land use and socioeconomic concerns (for example, recreational use/access). Despite this comprehensive focus, the CCC has little in the way of specific, objective criteria, which could be used to effectively screen the passive draft dry/air cooling option from further consideration.

The CCC representatives (Detmer & Luster, 2012) indicated that the Commission recognized that there were no great options to the existing once-through cooling system at DCPP. The CCC believes that almost all of the cooling system technology replacement options present some sort of negative impacts. Given that basis, the CCC appears to be resigned to consider options that may present additional onshore impacts to help mitigate the offshore environmental consequences of the existing once-through cooling system. The CCC mandate to protect the coastal resources offers this agency some latitude to balance one set of impacts versus another. This evaluation process is on a case-by-case basis, which can be translated into the conclusion that there are few triggers that would automatically preclude any cooling system options from consideration, including passive draft dry/air cooling and mechanical (forced) draft dry/air cooling towers.

The only potential fatal flaw trigger may be related to the fact that both the tall passive draft dry/air cooling structures and lower profile mechanical (forced) draft dry/air cooling structures will be situated on elevated terrain and so potentially visually intrusive. The CCC freely admitted that they would be very concerned visual impacts from large cooling tower structures and towering plume columns. While this technology will not produce a visible plume, the passive draft dry/air cooling towers' tall profile and both tower options elevated location could be a significant barrier to securing the Commission's Coastal Development Permit.

The passive draft dry/air cooling and mechanical (forced) draft dry/air cooling towers would not involve significant offshore construction efforts, so the CCC concerns regarding the deleterious impacts on marine resources (for example, hard marine substrate, commercial fishing) would not prove to be a decisive or contentious part of their review process.

The CCC would obviously view the reduction of thermal impact from the cooling system discharge (much reduced cooling tower blowdown discharge volume) and reduced entrainment/impingement impacts (reduced water withdrawal rates) as wholly positive outcomes from the application of both dry cooling systems. The overall weight of these positives in their balancing of environmental impacts is somewhat reduced by the fact that Commission is not primarily charged with evaluating the cooling system's compliance with Section 316(b), *California Once-Through Cooling Policy*, Phase II criteria or NPDES thermal discharge considerations.

The CCC review and approval process is mostly aligned with the CEQA review process. That is, any application for a Coastal Development Permit will be dependent on information, which is generated by an associated Environmental Impact Report development process. Consequently, the CCC permit review process will also be aligned with CEQA and consequently its duration will mirror the CEQA timeline (6 months–1 year). That period offers evidence that the Coastal Development Permit could be a critical path permitting process for the passive draft dry/air cooling technology (all water supply options).

<u>California State Lands Commission</u>

Construction efforts in subaqueous lands associated any cooling system modifications will be evaluated/approved by the California State Lands Commission. This review and associated lease approval process can follow three different tracks, as shown below:

- **Categorical Exemption** – applicable to those situations where there are no significant environmental impacts and there are no substantive changes in the existing land use. It is unlikely that this option would apply to any of the potential cooling system options that require marine work.

- **Mitigated Negative Declaration -** applicable for work that poses minor environmental impacts, during noncritical seasons, for limited period of time.

- **Environmental Impact Report/CEQA Process** – applicable for work that could potentially generate significant environmental impacts, uses heavy construction equipment, and/or will continue over a significant time periods (months). This review process is not fast-track and could extend for a year.

The passive draft dry/air cooling and technologies could potentially require revisions of the current cooling system infrastructure in subaqueous lands. Commission representatives (DeLeon & Oggins, 2012) explained that recent experience regarding the progress of the lease approval process for nonnuclear facilities with existing once-through systems has been slow. Most of these facilities have requested extensions to continue to evaluate available mitigation strategies.

The State Lands Commission evaluates each project individually and determines the appropriate review/approval path. The passive draft dry/air cooling and mechanical (forced) draft dry/air cooling options expected limited marine work may allow one to follow the more expeditious Mitigated Negative Declaration path, avoiding the longer, more complex Environmental Impact Report/CEQA review path. Consequently, the State Lands Commission lease will probably not represent a significant permitting hurdle for the passive draft dry/air cooling or mechanical (forced) draft dry/air cooling technology (for any water supply option).

State Water Resources Control Board – Central Coast Regional Water Quality Control Board

While the SWRCB has overall permit authority for California's two active nuclear power stations, the CCRWQCB has the follow-on inspection and enforcement role for the issue permits. For DCPP, the SWRCB expects to modify the existing NPDES permit, potentially issue a new waste discharge requirements permit for construction impacts to jurisdictional streambed areas, and finally, grant the construction project coverage under the general storm water permit for construction activity to address related storm water management issues.

The passive draft dry/air cooling or mechanical (forced) draft dry/air cooling system will require the current DCPP NPDES permit to be revised to address the expected changes to the cooling system discharge quantity and quality and compliance with the provisions of Section 316(b), *California Once-Through Cooling Policy*, Phase II requirements (reduction of impingement and entrainment impacts to marine resources). For a saltwater supply, this revision will reflect the expected increase in water treatment additives to the circulating water system, the significantly reduced saltwater withdrawal rates), and altered storm water management features. The Section 316(b), *California Once-Through Cooling Policy* requirements are not applicable, if the towers are supplied from freshwater and reclaimed water sources.

The waste discharge requirements permit may be required if the development of the passive draft dry/air cooling or mechanical (forced) draft dry/air cooling towers impacts jurisdictional streambeds (waters of the state). The waste discharge requirements will be coordinated with the California Department of Fish & Game Streambed Alteration Agreement that addresses biological resource and habitat protection issues in these same streambeds.

Both the SWRCB and CCRWQCB representatives (Morris, 2012 and Jauregui, 2012) explained that there are no obvious regulatory barriers regarding issuance of a revised NPDES permit for any of the cooling system options currently under consideration, including the saltwater passive draft dry/air cooling or mechanical (forced) draft dry/air cooling tower system. The CCRWQCB and SWRCB will not necessarily preclude cooling system options from consideration, even if these options fall short of full compliance with the perfor-

mance criteria tied to Section 316(b), *California Once-Through Cooling Policy*, Phase II rules (that is, through-screen velocity less than 0.5 feet/sec and entrainment/impingement levels equivalent that associated with a closed-cycle cooling system). The saltwater passive draft dry/air cooling towers can obviously demonstrate compliance with the Section 316(b), *California Once-Through Cooling Policy*, Section Phase II rules. The fresh or reclaimed water-supplied tower system completely avoids Section 316(b)-related compliance issues.

The local Regional Water Quality Control Board is ultimately a political body (9 individuals), whose members are interested in reviewing as much information/evidence as possible from the applicant and from their own technical staff regarding the feasibility and impacts of various cooling system alternatives. Consequently, none of the SWRCB permits represent a fatal flaw or critical path permitting process to the passive draft dry/air cooling or mechanical (forced) draft dry/air cooling technology (for any water supply option).

San Luis Obispo Air Pollution Control District (APCD)

DCPP is located within the San Luis Obispo Air Pollution Control District, a state-designated non-attainment area for PM-10 and PM-2.5, that is, the District has failed to achieve compliance with the state ambient air quality standards for these pollutants (Willey, 2012). In addition to this air quality compliance issue, there are also local concerns regarding visibility impacts on the nearest visibility sensitive areas, so-called Class I areas that are comprised of national parks (over 6000 acres), wilderness areas (over 5000 acres), national memorial parks (over 5000 acres), and international parks that were in existence as of August 1977. While these situations may have ramifications for those cooling system options, which generate significant particulate emissions (wet closed-cycle systems), air quality permits/approvals are not expected to play an appreciable role for the passive draft dry/air cooling or mechanical (forced) draft dry/air cooling system—dry cooling systems that are not expected to generate any additional operational air emissions.

San Luis Obispo County

The passive draft dry/air cooling or mechanical (forced) draft dry/air cooling tower system will likely trigger the need for the San Luis Obispo County Planning and Building Department to initiate a conditional use permit process, which in turn will be wholly dependent on a CEQA review process.

The county recently completed a CEQA/conditional use permit review process for the DCPP steam generator replacement project (Hostetter, 2012). The county, along with NRC, were designated the lead agencies for the CEQA review. The CEQA/conditional use permit process for the steam generator replacement project, which involved significant rounds of negotiations, was characterized as complex and lengthy (years long).

As the county (Hostetter, 2012) predicted that any cooling system option with significant potential for environmental impacts would likely trigger a similar complex and lengthy CEQA/conditional use permit review, the passive draft dry/air cooling or mechanical (forced) draft dry/air cooling towers' significant land and marine impacts will be subject to this rigorous process. The county can be expected to aggressively pursue the evaluation of alternative cooling system options in addition to reviewing this cooling tower option.

The county also explained (Hostetter, 2012) that is unlikely that they will identify any environmental impact criteria from the CEQA review process that would immediately preclude any of the cooling system alternatives under consideration, including the passive draft dry/air cooling or mechanical (forced) draft dry/air cooling system. The county views the CEQA review process as the mechanism that will ultimately identify the best solution for DCPP—all solutions will be considered.

Other Agencies

In addition to the key regulatory agencies described above, there are a number of regulatory agencies that could potentially play a role in the permitting of the passive draft dry/air cooling or mechanical (forced) draft dry/air cooling option. The U.S. Fish and Wildlife Service, California Department of Fish & Game, and California Office of Historic Preservation, for example, may play a significant regulatory role this power plant upgrade effort. Both dry cooling tower system options will be located in unoccupied upland area and an adjacent property outside of the DCPP property boundaries. Both areas could contain some grassland and chaparral habitat. These options will also demand pipeline crossing of a riparian habitat along Diablo Creek, which is upstream of a known cultural resource area. Finally, the California Energy Commission (CEC) will be largely excluded from the permitting processes primarily because the passive air-cooled draft cooling tower system will not boost the current power levels of the DCPP facility, let alone reach the 50 MW threshold that would mandate CEC review.

The tall passive draft dry/air cooling towers will significantly alter the overall profile of the DCPP facility because these tall towers are situated on elevated ground. The lower profile mechanical (forced) draft dry/air cooling towers will have a reduced, but still significant visual impact because of their location on this high ground. The passive draft dry/air cooling towers and any related construction equipment will extend beyond the 200 foot threshold typically used to define obstructions to aviation. Consequently, these tall structures and related construction equipment will warrant the submittal of Notices of Proposed Construction or Alteration with the Federal Aviation Administration (FAA). The mechanical (forced) draft dry/air cooling towers and any related construction equipment are below this 200 foot threshold, consequently these towers will not warrant the submittal of related Notices of Proposed Construction or Alteration with the FAA.

Summary

The external approval and permitting assessment for the passive draft dry/air cooling and mechanical (forced) draft dry/air cooling systems identified a list of potentially applicable federal, state and local permits and approvals. These permits lists are shown in Tables CC-3 through CC-6. The air-cooled process effectively mitigates all of the serious air quality concerns of the equivalent wet saltwater tower systems, while maintaining an intake system that is fully aligned with the requirements of the Section 316(b), *California Once-Through Cooling Policy*. The main permitting challenges in this case are associated with the significant visual impacts of these cooling systems and their potential impacts to upland and riparian habitats. Both issues will be key aspects of the CEQA review process. This process and the associated permitting processes (CCC) may be contentious and lengthy. However, these regulatory hurdles do not represent fatal flaws that would preclude the passive draft dry/air cooling or mechanical (forced) draft dry/air cooling option from further consideration.

The assessment also indicated that the Section 404 permit and the CEQA review process will likely represent the critical path review and approval processes (approximately 12 month) for the passive air-cooled towers. This critical path process does not represent barrier to development of this cooling technology system.

4.1.2.2 Wet Cooling Tower Systems - Wet Natural Draft, Wet Mechanical Draft, and Hybrid Wet/Dry

The wet natural draft cooling tower option will involve the installation of multiple tall hyperbolic structures (approximately 600 feet above ground level) on a sloped unoccupied land north of the power block area, north of Diablo Creek. The wet mechanical (forced) draft cooling and hybrid wet/dry cooling tower options will also place four facilities (lower profile mechanical draft towers or round wet/dry towers) in this same area.

The wet natural draft cooling and wet mechanical (forced) draft cooling towers plume will be unabated and produce significant visible plumes, while the hybrid wet/dry cooling system includes plume abatement system that should largely limit the incidence of visible plumes. Water sources to all of these tower systems will include saltwater, freshwater and reclaimed water. The water withdrawal intake system for the saltwater option will require some limited marine work to the existing once-through system intake system. Freshwater will come from a new system of onsite wells or be supplied from undefined external sources that are made available at the site boundary. The reclaimed water option will depend on water coming treated effluent from wastewater treatment facilities in the area via pipeline. For the purposes of this evaluation, this water source is also assumed to be available at the site boundary. The specific permits associated with external sources of freshwater and reclaimed are beyond the scope of this initial assessment, but may be the subject of subsequent evaluations.

U.S. Army Corps of Engineers

The USACE is the lead agency for Clean Water Act Section 404 and Section 10 permitting processes, which are focused primarily on impacts to waters of the United States and waterborne navigation. While these cooling tower systems are expected to pose limited construction impacts to USACE jurisdictional waters, this cooling tower option will likely involved USACE permitting—at least for the saltwater source option. The freshwater and reclaimed water supply options will likely not involve work in jurisdictional waters, unless the associated pipelines cross such areas. The impact of those offsite impacts are not addressed in this evaluation.

For minor impacts, the USACE has established a general permit program (nationwide permit) for a host of less significant work processes involving waters of the United States. So it is possible that these wet cooling tower saltwater options could demand a nationwide permit. If the marine work associated with this cooling tower option exceeds that threshold allowed by the nationwide permit or is otherwise deemed significant, DCPP would then be faced with securing a new individual Section 404/10 permit.

While individual Section 404 permit review periods can often be lengthy, the USACE representative for the DCPP area explained that all USACE facilities have goal to issue an individual Section 404 permit within 120 days of deeming the associated application complete (Lambert, 2012). This period is a goal, not a statutory commitment. Consequently, in many cases this goal is not realized. These delays are often associated with the mandated consulting processes that need to be pursued with the State Historic Preservation Office, U.S. Fish and Wildlife Service or National Marine Fisheries Service. In other cases there are extensions of public notice periods or scheduling complications for the public hearing. The applicant for the Section 404/10 permit has to directly pursue consultations with CCC and SWRCB. Receipt of an individual Section 404 permit is contingent on previous receipt of permits from the CCC and SWRCB.

This difficult situation is impeded further by the under staffed local USACE offices (two to three permit writers), so permit review durations have been getting longer. For the more complex and contentious situations, the permitting process can extend to 1–2 years. Hence, the USACE permits are often characterized as the critical path permitting process.

Despite the potential for review periods longer than the 120 day target, the USACE did not see any barriers or fatal flaws regarding the Section 404 permitting process for near-shore marine work associated with changes to the existing saltwater intake system. (Lambert, 2012) The freshwater and reclaimed water supply options for the wet tower systems offsite are assumed to be available at the property boundary and so do not pose any immediate or significant concerns.

California Public Utility Commission

Pacific Gas & Electric's DCPP is regulated by the CPUC, which is charged with overseeing investor-owned public utilities. San Luis Obispo County may share the role of lead agency for the CEQA review process with the CPUC. CEQA is regulatory statute, which requires state or local regulatory agencies to identify, assess, avoid or otherwise mitigate the significant environmental impacts from the proposed action—the addition of new cooling system technology.

The proposed addition of these significant tower systems will likely trigger preparation of an Environmental Impact Report. The Environmental Impact Report is a detailed report that identifies the potentially significant environmental effects the project is likely to have; identifies feasible alternatives to the proposed project; and indicates the ways in which significant effects on the environment can be mitigated or avoided. This Environmental Impact Report will also be used by other state agencies to support their respective review and approval processes.

Following finalization of the Environmental Impact Report, the CPUC will evaluate whether to certify CEQA compliance. This certification then supports their subsequent decision regarding whether the costs associated with the new cooling system can be reclaimed via a consumer rate base adjustment.

While the CPUC-sponsored review process and decision regarding cost recovery will likely be a lengthy, complex and contentious process, there are no definitive environmental barriers that preclude successfully completion of the CEQA review.

California Coastal Commission

The CCC has a broad mandate to protect the coast resources of California that include the DCPP facility and any related site where the wet natural draft cooling towers could be sited. Consequently, the CCC's environmental concerns address a broad range of subject matter include visual resources, land and marine-based biological resources, land use and socioeconomic concerns (for example, recreational use/access). Despite this comprehensive focus, the CCC has little in the way of specific, objective criteria that could be used to effectively screen wet cooling tower options from further consideration.

The CCC representatives (Detmer & Luster 2012) indicated that the Commission recognized that there were no great options to the existing once-through cooling system at DCPP. The CCC believes that almost all of the cooling system technology replacement options present some sort of negative impacts. Given that basis, the CCC appears to be resigned to consider options that may present additional onshore impacts to help mitigate the offshore environmental consequences of the existing once-through cooling system. The CCC mandate to protect the coastal resources offers this agency some latitude to balance one set of impacts versus another. This evaluation process is on a case-by-case basis, which can be translated into the conclusion that there are few triggers that would automatically preclude any cooling system options from consideration, including wet cooling tower systems.

The only potential fatal flaw trigger may be related to the rather tall wet natural draft cooling and somewhat lower wet mechanical (forced) draft cooling, which both generate a visually intrusive unabated cooling tower plume. The CCC freely admitted that they would be very concerned visual impacts from large cooling tower structures and towering plume columns. Therefore, this visual resource issue has the potential to be barrier to the secure the Commission's Coastal Development Permit for the wet natural draft cooling and wet mechanical (forced) draft cooling systems. The lower profile plume-abated hybrid wet/dry cooling towers would likely mitigate CCC visual resource concerns.

The wet towers would not involve significant offshore construction efforts, so the CCC concerns regarding the deleterious impacts on marine resources (for example, hard marine substrate, commercial fishing) would not prove to be a decisive or contentious part of their review process.

The CCC would obviously view the reduction of thermal impact from the cooling system discharge (significantly reduced cooling tower blowdown discharge volume) and reduced entrainment/impingement impacts (reduced water withdrawal rates) as wholly positive outcomes from the application of a wet tower system. The overall weight of these positives in their balancing of environmental impacts is somewhat reduced by the fact that Commission is not primarily charged with evaluating the cooling system's compliance with Section 316(b), *California Once-Through Cooling Policy*, Phase II criteria or NPDES thermal discharge considerations.

The CCC review and approval process is mostly aligned with the CEQA review process. That is, any application for a Coastal Development Permit will be dependent on information that is generated by associated Environmental Impact Report development process. Consequently, the CCC permit review process will also be aligned with CEQA and consequently its duration will mirror the CEQA timeline (6 months–1 year). That period offers evidence that the Coastal Development Permit could be a critical path permitting process for the wet tower system (all water supply options).

California State Lands Commission

Construction efforts in subaqueous lands associated with any cooling system modifications will be evaluated/approved by the California State Lands Commission. This review and associated lease approval process can follow three different tracks – as shown below:

- **Categorical Exemption** – applicable to those situations where there are no significant environmental impacts and there are no substantive changes in the existing land use. It is unlikely that this option would apply to any of the potential cooling system options that require marine work.

- **Mitigated Negative Declaration** - applicable for work that poses minor environmental impacts, during noncritical seasons, for limited period of time.

- **Environmental Impact Report/CEQA Process** – applicable for work that could potentially generate significant environmental impacts, uses heavy construction equipment, and/or will continue over a significant time periods (months). This review process is not fast-track and could extend for a year.

The wet tower technologies could potentially require revisions of the current cooling system infrastructure in subaqueous lands. Commission representatives (DeLeon & Oggins, 2012) explained that recent experience regarding the progress of the lease approval process for nonnuclear facilities with existing once-through systems has been slow. Most of these facilities have requested extensions to continue to evaluate available mitigation strategies.

The State Lands Commission evaluates each project individually and determines the appropriate review/approval path. The wet tower cooling systems' expected limited marine work may allow one to follow the more expeditious Mitigated Negative Declaration path, avoiding the longer, more complex Environmental Impact Report/CEQA review path. Consequently, the State Lands Commission lease will probably not represent a significant permitting hurdle for these wet cooling tower systems (any water supply option).

State Water Resources Control Board – Central Coast Regional Water Quality Control Board

While the SWRCB has overall permit authority for California's two active nuclear power stations, the Regional Water Quality Control Board has the follow-on inspection and enforcement role for the issue permits. For DCPP, the SWRCB expects to modify the existing NPDES permit, potentially issue a new waste discharge requirements permit for construction impacts to jurisdictional streambed areas, and finally, grant the construction project coverage under the general storm water permit for construction activity to address related storm water management issues.

The wet cooling tower systems will require the current DCPP NPDES permit to be revised to address the expected changes to the cooling system discharge (blowdown) quantity and quality and compliance with the provisions of Section 316(b), *California Once-Through Cooling Policy*, Phase II requirements (reduction of impingement and entrainment impacts to marine resources). For a saltwater supply, this revision will reflect the expected increase in water treatment additives to the circulating water system, the significantly reduced saltwater withdrawal rates, and altered storm water management features. The Section 316(b), *California Once-Through Cooling Policy*, requirements are not applicable if the towers are supplied from freshwater and reclaimed water sources.

The waste discharge requirement permit may be required if the development of the wet cooling system impacts jurisdictional streambeds (waters of the state). The waste discharge requirement will be coordinated with the California Department of Fish & Game Streambed Alteration Agreement, which addresses biological resource and habitat protection issues in these same streambeds.

Both the SWRCB and CCRWQCB representatives (Morris, 2012 and Jauregui, 2012) explained that there are no obvious regulatory barriers regarding issuance of a revised NPDES permit for any of the cooling system options currently under consideration, including the saltwater wet tower systems. The CCRWQCB and SWRCB will not necessarily preclude cooling system options from consideration, even if these options fall short of full compliance with the performance criteria tied to Section 316(b), *California Once-Through Cooling Policy*, Phase II rules (that is, through-screen velocity less than 0.5 feet/sec and entrainment/impingement levels equivalent that associated with a closed-cycle cooling system). The saltwater wet towers cooling tower system can obviously demonstrate compliance with the Section 316(b), *California Once-Through Cooling Policy*, Phase II rules. The fresh or reclaimed water-supplied tower system completely avoids Section 316(b)-related compliance issues.

The Regional Water Quality Control Board is ultimately a political body (9 individuals), whose members are interested in reviewing as much information/evidence from the applicant as possible and from their own technical staff regarding the feasibility and impacts of various cooling system alternatives. Consequently, none of the SWRCB permits represent a fatal flaw or critical path permitting process to the wet cooling tower systems (for any water supply option).

San Luis Obispo Air Pollution Control District (APCD)

DCPP is located within the San Luis Obispo Air Pollution Control District, a state-designated non-attainment area for PM-10 and PM-2.5, that is, the District has failed to achieve compliance with the state ambient air quality standards for these pollutants. Given this regional status, the particulate emissions from the operation of a wet saltwater system can be expected to present a significant regulatory challenge, especially for the saltwater supply option.

From previous studies (TetraTech, 2008) it is clear that a saltwater wet natural draft cooling tower system will generate particulate emissions in quantities that will exceed the major source threshold for PM-10 (100

tons year). If the DCPP facility was already a major source of a criteria air pollutant (that is, maintaining a major source air permit), this threshold drops to the major modification level of 15 tons/year.

Given this status, the addition of a saltwater wet natural draft cooling system is expected to increase PM-10 emissions by more than 100 tons per year, which will make the DCPP subject to a formal New Source Review process. This process will eventually culminate in forcing DCPP to secure PM-10 emissions offsets in response to the new cooling tower-related particulate emission. The fresh and reclaimed water-supplied wet cooling towers will likely not trigger this 100 ton threshold.

The San Luis Obispo APCD representative (Willey, 2012) explained that they maintain a registry of emission reduction credits for PM-10. There is no PM-2.5 registry. The total PM-10 tons/year emission reduction credits (that is, emission offsets) available in this District totals approximately 31 tons/year—see Table CC-2 for an excerpt of this summary. These emissions are retained or owned by a number of different companies or organizations. The emission reduction credits are available for sale or they can be retained by the Owners for future use. Alternatively, the interested party can generate additional emission reduction credits by shutting down additional sources of PM-10 either within their direct control or via separate third party arrangements.

The saltwater water cooling towers are expected to generate PM-10 emissions far in excess of 31 tons/year. It is likely that the fresh or reclaimed water options for closed cooling systems could also generate substantial PM-10-related emissions. To offset these PM-10 emissions from the wet tower systems, PG&E would need to purchase these available emission reduction credits and potentially supplement this with other emission reduction credits. SCE could generate these emission reduction credits directly through PM-10 emission reductions within their own fleet of regulated sources or they could encourage others to make similar reductions.

In addition to the issue of available emission offsets there is issue of visibility impacts on the nearest visibility sensitive areas, so-called Class I areas that are comprised of national parks (over 6000 acres), wilderness areas (over 5000 acres), national memorial parks (over 5000 acres), and international parks that were in existence as of August 1977. The air quality and visibility impact of the saltwater wet towers particulate emission will have to be assessed on the closest Class I areas to DCPP (San Rafael Wilderness and Ventana Wilderness). See Figure CC-15 for the location of these areas.

In summary, there are only a finite number of PM-10-related emission credits available from a disparate set of Owners, who are not necessarily ready or willing to sell these credits. The process to generate additional PM-10 emission reduction credits is not expected to close this gap between available offsets and the annual facility PM-10 emissions. Thus, the particulate emissions from the saltwater towers combined with the insufficient particulate emission offsets means that DCPP will most likely not be able to secure the necessary major source air permit to support wet saltwater tower operation. The air quality and visibility impacts to nearby Class I areas from the cooling tower particulate emissions are also a potentially significant issue, but they are a second order consideration relative to the emission offset situation. The lack of sufficient PM-10 emission offsets is a clear fatal flaw condition for saltwater wet towers that will preclude this cooling system from further consideration. There is not such fatal flaw for the fresh and reclaimed water-supplied wet towers.

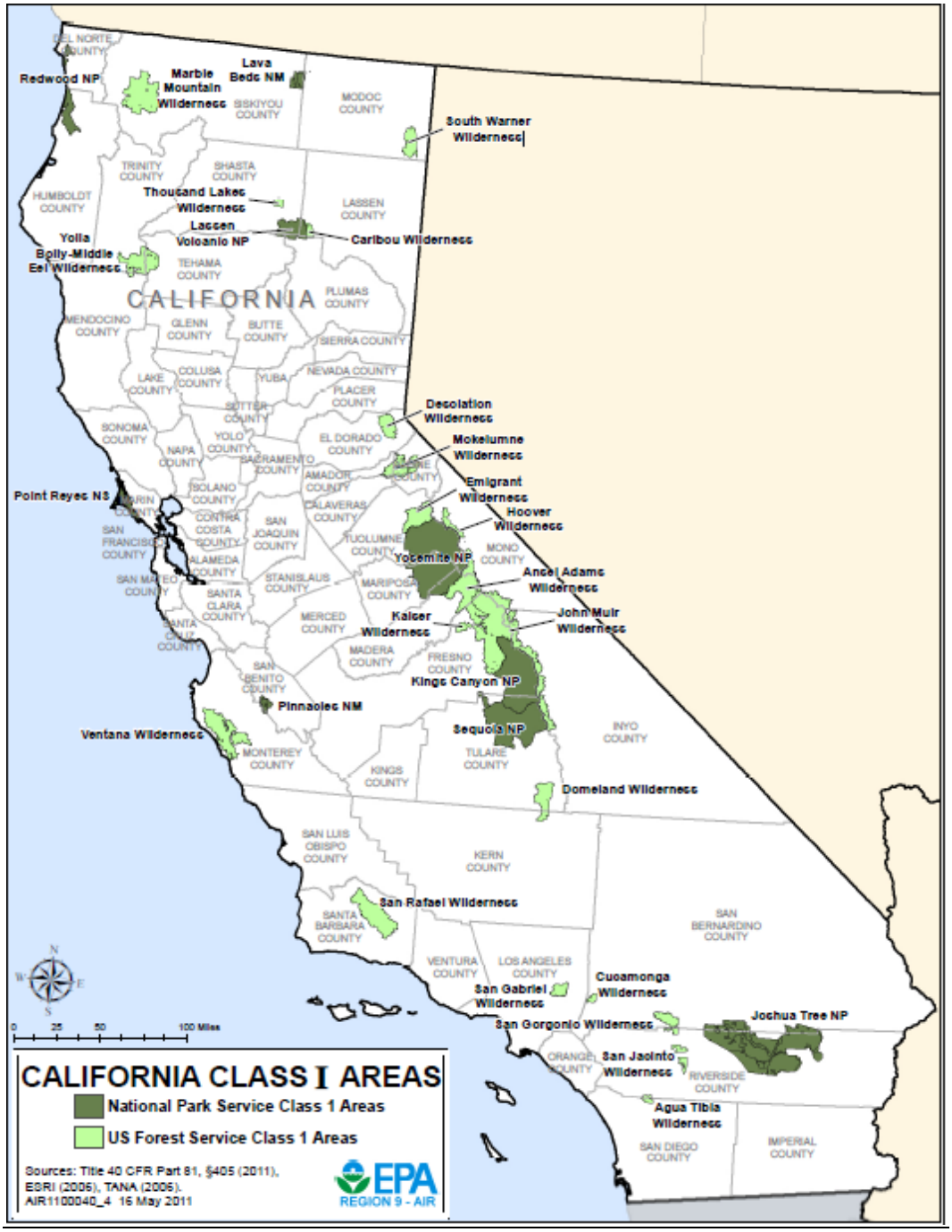

Figure CC-15. Southern California Class I Areas

Re: http://www.epa.gov/region9/air/maps/pdfs/AIR1100040_4.pdf

San Luis Obispo County

The wet cooling tower systems will likely trigger the need for the San Luis Obispo County Planning and Building Department to initiate a conditional use permit process, which in turn will be wholly dependent on a CEQA review process.

The county recently completed a CEQA/conditional use permit review process for the DCPP steam generator replacement project (Hostetter, 2012). The county, along with NRC, were designated the lead agencies for the CEQA review. The CEQA/conditional use permit process for the steam generator replacement project, which involved significant rounds of negotiations, was characterized as complex and lengthy (years long).

As the county (Hostetter, 2012) predicted that any cooling system option with significant potential for environmental impacts would likely trigger a similar complex and lengthy CEQA/conditional use permit review, the wet towers significant land, air and marine impacts will be subject to this rigorous process. The county can be expected to aggressively pursue the evaluation of alternative cooling system options in addition to reviewing this cooling tower option.

The county also explained (Hostetter, 2012) that is unlikely that they will identify any environmental impact criteria from the CEQA review process that would immediately preclude any of the cooling system alternatives under consideration, including the wet cooling systems. The county views the CEQA review process as the mechanism that will ultimately identify the best solution for DCPP—all solutions will be considered.

Other Agencies

In addition to the key regulatory agencies described above, there are a number of regulatory agencies that could potentially play a role in the permitting of the wet cooling tower options. The U.S. Fish and Wildlife Service, California Department of Fish & Game, and California Office of Historic Preservation, for example, may play a significant regulatory role this power plant upgrade effort. The wet tower systems will be located in unoccupied upland area, which could contain some marginal grassland and chaparral habitat. This option will also demand pipeline crossing of a riparian habitat along Diablo Creek, which is upstream of a known cultural resource area. Finally, the California Energy Commission (CEC) will be largely excluded from the permitting processes primarily because the wet cooling tower systems will not boost the current power levels of the DCPP facility, let alone reach the 50 MW threshold that would mandate CEC review.

The wet natural draft cooling towers will significantly alter the overall profile of the DCPP facility and they are likely to require cranes over 200 feet above local ground level. As the towers and related cranes have the potential to be obstructions to aviation, related Notices of Proposed Construction or Alteration will need to be filed with the FAA to facilitate their review. The wet mechanical (forced) draft cooling and hybrid wet/dry cooling towers will also alter the overall profile the previously undeveloped area, but theses tower systems and the related construction equipment are below the 200 foot FAA threshold. Consequently, these systems will not warrant the submittal of related Notices of Proposed Construction or Alteration with the FAA.

Summary

The external approval and permitting assessment for the wet tower systems identified a list of potentially applicable federal, state and local permits and approvals that not surprisingly focused on its significant impacts to local air quality and the coastal zone. These permits lists are shown in Tables CC-7 through CC-12. While the efforts to conduct a successful CEQA review and secure the requisite USACE Section 404 permit, CCC Coastal Development Permit, State Lands Commission Lease, NPDES permit modification will represent

challenges, the air quality permitting process is constrained by clear fatal flaw for the saltwater supply option.

As noted earlier, San Luis Obispo Air Pollution Control District is a non-attainment area for PM-10 and the finite number of PM-10-related emission credits available fall well short of the amount necessary to offset the wet cooling tower generated salt emissions. The gap is too large to encourage any attempts to generate additional particulate offsets from reducing the particulate emissions from local industrial sources of particulates. Without these offsets, DCPP would most likely not be able to secure the necessary major source air permit to support saltwater wet tower operation. The saltwater-supplied wet cooling tower technologies (wet natural draft cooling, wet mechanical (forced) draft cooling) cannot be considered a viable option. The fresh and reclaimed water supply cooling tower options do not have this definitive fatal flaw, but they still have the permitting challenges posed by new construction and very prominent structures in the coastal zone.

4.2 Impingement/Entrainment Design

4.2.1 General Discussion

Use of any of the closed-cycle technologies evaluated in this report will be acceptable with respect to impingement/entrainment design in accordance with Section 316 (b), *California Once-Through Cooling Policy*. The dry technologies will not require a continuous water makeup source after the closed system is initially charged because there will not be any evaporative or drift losses and makeup will only be required to account for any small system leaks or other losses. Due to the fatal flaw associated with permitting seawater use, as described in Section 4.1, the only water sources that can be used for the wet and hybrid wet/dry cooling technologies are fresh and reclaimed water. These sources are assumed to be available from wells and water treatment facilities and thus impingement/entrainment associated with intake structures from oceans or other open water sources would not be present. The only significant continuous makeup that will be required from the ocean for any of the closed-cycle options will be what is required to support any safety-related systems, which is outside the scope of this phase of the assessment.

4.2.2 Detailed Evaluation

The facility water intake flow is assumed to be directly proportional to impingement and entrainment effects. Therefore, reductions in intake flow rate are considered equivalent to reductions in impingement and entrainment. At DCPP Units 1 and 2, the existing once-through cooling systems would be replaced with closed-cycle cooling towers for all but the safety-related systems and components, which would remain cooled by the auxiliary saltwater system using once-through cooling. The auxiliary saltwater system represents approximately 2 to 5 percent of total plant cooling water flow rate. Retrofitting the existing once-through cooling systems for Units 1 and 2 with closed-cycle cooling towers would therefore reduce cooling water withdrawals from the Pacific Ocean by approximately 95 to 98 percent. Impingement and entrainment is expected to be reduced by a similar proportion resulting in compliance with proposed Section 316(b), *California Once-Through Cooling Policy* requirements.

4.3 Offsetting Environmental Impacts

4.3.1 General Discussion

The environmental offsets are an environmental management tool that has been characterized as the *last line of defense* after attempts to mitigate the environmental impacts of an activity are considered and exhausted (GWA, 2006). In some cases significant unavoidable adverse environmental impacts may be counterbalanced

by some associated positive environmental gains. Environmental offsets, however, are not a project negotiation tool, that is, they do not preclude the need to meet all applicable statutory requirements and they cannot not make otherwise unacceptable adverse environmental impacts acceptable within the applicable regulatory agency.

In some cases, regulatory agencies may be so constrained by their regulatory foundation that offset opportunities are limited or unavailable. The San Luis Obispo Air Pollution Control District, for example, has the regulatory authority to offset new air emissions in their district from previously banked emission reductions as long as the new emission sources meet appropriate stringent emission performance criteria. The Air Pollution Control District cannot offset new air emissions with reductions in the impingement and entrainment impacts to aquatic life or reductions in land disturbance. In other cases, the regulatory agencies, such as the California Coastal and State Lands Commissions, have a more broad-based, multi-disciplinary review process that supports a more flexible approach to using environmental offsets to generate the maximum net environmental benefit.

With these considerations in mind, the following assessment of offsetting environmental impacts focuses on identifying both positive and negative construction and operational environmental impacts associated the with construction and operation of the closed-cycle systems from a broad range of environmental evaluation criteria.

4.3.2 Detailed Discussion

The following sections evaluate the air, water, waste, noise, marine and terrestrial ecological resources, land use, cultural and paleontological resources, visual resources, transportation, and socioeconomic issues associated with construction and operation of each closed-cycle system technology. Given the wide range of environmental impact subject areas under consideration, the systematic approach used in the Diablo Canyon License Renewable Application process was used (PG&E, 2009). Consequently, following discussion of the individual environmental subject areas, the related consequences are categorized as having either positive or negative small, moderate or large impact significance. The specific criteria for this categorization are shown below:

- Small: Environmental effects are not detectable or are minor, such that they will not noticeably alter any important attribute of the resource
- Moderate: Environmental effects are sufficient to noticeably alter, but not significantly change the attributes of the resource.
- Large: Environmental effects are clearly noticeable and are sufficient to change the attributes of the resource.

The results of these evaluations and impact categorization are subsequently summarized in the Tables CC-13 through CC-17.

4.3.2.1 Dry Cooling Systems - Passive Draft Dry/Air Cooling and Mechanical (Forced) Draft Dry/Air Cooling

Air

Fugitive dust from earthwork and concrete activities associated with development of the passive draft dry/air cooling and the mechanical (forced) draft dry/air cooling tower systems could be significant. Diesel and gasoline engine emissions-related air emissions can be expected from workforce personal vehicles, over-the-road project, and off-road construction vehicles and equipment. There will be air emission sources on temporary offshore platforms or barges. Construction supplies and related circulating piping-related equipment deliveries may be significant in the early phases of construction. Collectively, these transient air quality impacts can be characterized as small negative.

As opposed to the wet form of this tower system, the cooling water in these dry processes are wholly maintained within a closed system. There are no drift losses and no condensed plume. Consequently, there are no particulate (salt) emissions or related impacts from this tower system.

The passive draft dry/air cooling or the mechanical (forced) draft dry/air tower system will likely have a minor negative impact on DCPP overall plant efficiency, due to increases in cooling water temperature relative to the existing once-through system. The resulting decreases in power generation may result in minor increases in greenhouse gas or other pollutant emissions locally if the replacement power comes from fossil power sources.

The saltwater tower operational impacts (deposition, corrosion, visibility) collectively represent as a small negative impact.

Surface Water

The addition of saltwater passive draft dry/air cooling or the mechanical (forced) draft dry/air towers will involve some marine-based construction activities to refashion the intake system for the reduce closed-cycle cooling system withdrawal rates. This will have the potential to generate significant water quality impacts. Construction of the inshore intake system and connecting piping will result in localized turbidity impacts from disruption of the local seabed. The construction efforts associated with building the cooling tower structures are expected to result in significant land-based disturbance and storm water-related impacts. Collectively, these surface water impacts are characterized as a moderate negative impact.

The saltwater-supplied passive draft dry/air cooling or the mechanical (forced) draft dry/air system will substantially reduce seawater withdrawals rates even relative to a wet natural draft cooling system, because there are no blowdown, drift, or evaporative losses, and the only saltwater demand is the initial charging of the system and the minimal makeup for system leakage or other minor losses. The fresh and reclaimed water use rates will be further reduced relative to the seawater withdrawal because these will likely be charged from fresh or reclaimed water sources.

Freshwater surface water use for industrial cooling purposes poses a moderate negative impact, in that such a valuable resources is generally devoted to a higher use (potable water, recreational use). Industrial use of this wastewater provides a small positive benefit, as this process reduces the overall volume of the final effluent reaching the environment.

Groundwater

While groundwater resources could be used to satisfy increase freshwater construction water demands (compaction, dust control, concrete), there are likely sufficient existing onsite water supplies to satisfy these needs.

Onsite groundwater resources will not be used in support of saltwater passive draft dry/air cooling or the mechanical (forced) draft dry/air tower operation. However, this water resource could be used to satisfy or contribute to the operational water needs of the freshwater passive draft dry/air cooling or the mechanical (forced) draft dry/air towers or used to supplement the water needs of the reclaimed water cooling tower system.

Groundwater use for industrial cooling purposes poses a moderate negative impact, in that such a valuable resources is generally devoted to a higher use (potable water, recreational use).

Waste

Construction-related wastes, demolition wastes, and recyclable metals associated with modification of the existing inshore portions of the intake system, will be generated during course of development of the towers. The proposed location of the towers, a complex terrain area north of the power block area will demand considerable earthwork to product a workable foundation arrangement for the large rectangular tower systems. The associated earthwork material balance has not been prepared for this initial phase of the assessment. Marine dredge spoil volumes will also be generated.

The final disposition of these materials has not been determined. Most of the non-soil-related construction wastes are expected to have salvage value and therefore, not represent a burden to offsite disposal facilities. Disposal of surplus soil/rock or marine spoils, whether directed to an onsite or offsite disposal area, will represent a moderate construction negative impact.

Physical inspection and cleaning of this intake system, as part of the maintenance program, may generate additional biological wastes. Collection and disposal of these marine wastes, therefore, can be categorized as a small operational negative impact.

Noise

The County of San Luis Obispo County General Plan and Local Coastal Plan limit noise levels to 70 dBA at the property line of the affected (public area (Tetra Tech). Noise impacts from construction activities associated with the passive draft dry/air cooling or the mechanical (forced) draft dry/air towers could be significant, but distance to the nearest offsite public property line is significant. The construction of the refashioned near-shore intake system is not expected generate significant noise impacts for land-based locations. Buffer areas around offshore construction zones will likely be established for safety reasons, but will also serve to reduce noise impacts to offshore noise receptors (watercraft) and shoreline areas that have public access. PG&E owns all coastal properties north of Diablo Creek to the southern boundary of Montana de Oro State Park and all coastal properties south of Diablo Creek for approximately 8 miles, so the potential for construction-related noise impacts to the public along property boundaries or shoreline areas is unlikely.

Operational noise levels are expected to increase because of passive draft dry/air cooling tower-related motors, and power transmission unit elements. The mechanical (forced) draft dry/air units will also have fans. While the noise-related impacts to onsite occupied buildings could rise above the target exposure limit, noise

limits will not be enforced on DCPP property. The impact to operational noise levels from passive draft dry/air cooling or the mechanical (forced) draft dry/air tower operation and the resulting impacts to occupied onsite area are minimal.

Land Use

Construction activities associated with this system will be confined to a sloped area north of the power block area which, though unoccupied, may have undergone some alteration during the course of DCPP construction and operation. Only half of the necessary passive draft dry/air cooling towers (six) systems will fit within the current DCPP property boundaries. Only one of the two large mechanical (forced) draft dry/air air-cooled systems (1590 feet by 760 feet) will fit within the current DCPP property boundaries. So the property boundaries will need to be expanded to accommodate the second units cooling facility. The addition of either dry cooling system will represent a fundamental change to an area that has largely not been used for direct power plant operations and a significant expansion of the boundaries of the DCPP site.

Marine construction activities will also be conducted in near the existing inshore intake system. This work could temporarily preclude normal recreational activities in waters in the immediate construction areas. Buffer zones will be created and maintained during the course of construction for the safety of the workforce and public. The potential temporary restriction of normal public access in these marine areas combined with the significant construction activities the new cooling tower represents a large construction-related negative impact for this cooling technology option.

The passive draft dry/air cooling or mechanical (forced) draft dry/air system and the modified inshore intake system collectively pose significant changes to the existing land use and DCPP property boundaries. This new cooling tower area will become part of the operating power plant with all of the attendant security and maintenance provisions. The modified intake system could represent a minor change to land use in previously undeveloped subaqueous areas adjacent to the existing near-shore portions of the existing intake system. Given these impacts, the dry cooling tower systems are expected to offer an operational large negative impact.

Marine Ecological Resources

Reconfiguring inshore portions of the existing intake system for the passive draft dry/air cooling or mechanical (forced) draft dry/air towers will result in significant localized turbidity impacts and some temporary and permanent loss of the biological productive near-shore marine habitat area—a small negative impact. Construction of the freshwater and reclaimed water-supplied tower system will have no effect on marine resources.

Operationally, the saltwater passive draft dry/air cooling or mechanical (forced) draft dry/air cooling system can effectively mitigate impacts to marine resources by limiting the through-screen velocity to less than 0.5 fps and reduce entrainment impacts because of it substantially reduced water withdrawal rate. The fresh or reclaimed water-supplied tower system completely avoids a seawater withdrawal and so completely avoids operational impacts to marine resources. It is important to note that the current DCPP once-through system result in the lowest impingement biomass rate (weight/gallons of water withdrawn) of all coastal power plants (Tenera, 2011). This is due primarily to its relatively confined engineering cove and exposed rocky coast that create a localized environment where the local fish and shellfish population adapted to strong coastal currents and variable ocean surges making them somewhat resistant to the flow dynamics of cooling water intake systems. This offshore intake system will not, by itself, reduce the overall water withdrawal or discharge rates. The thermal discharge impacts to aquatic life will remain largely unchanged. So while the

passive draft dry/air cooling or mechanical (forced) draft dry/air cooling tower system is fully regulatory compliant system, its positive attributes are somewhat tempered by the unusually effective performance of the existing intake system. The regulatory compliance attribute is sufficient to categorize the passive draft dry/air cooling or mechanical (forced) draft dry/air cooling tower system as a large positive impact.

Terrestrial Ecological Resources

The passive draft dry/air cooling or mechanical (forced) draft dry/air towers will be constructed in a largely unoccupied area DCPP plant property situated north of the power block area and the intervening Diablo Creek. Areas outside of the existing DCPP property will be needed. The air-cooled system will be on situated on lands that may have been altered during the course of DCPP construction and operation and on previously undeveloped land beyond the DCPP site boundary. Consequently, some of these areas are expected to include ruderal species of nonnative grades and broadleaf weeds. There will be more grassland and chaparral habitats in less disturbed upland portions of this proposed development area situated outside of the plant boundary. Consequently, the tower area is expected to limited habitat potential and limited wildlife use. However, there will also be potential for impacts from the circulating water piping that will need to cross the intervening Diablo Creek sensitive riparian habitat area. There are various crossing systems that could be used to minimize impacts to this area (directional boring, elevated structures). Collectively, construction of the tower system is expected to pose a moderate negative impact.

The fully constructed tower system will permanently occupy previously undeveloped land with some modest habitat value and impact small portions of the more sensitive and valuable riparian habitat along Diablo Creek. This also equates to an operational moderate negative impact.

Cultural and Paleontological Resources

As described above, construction of the passive draft dry/air cooling or mechanical (forced) draft dry/air cooling tower system will be constructed in an unoccupied portion of the DCPP property that may have undergone some previous alteration and some adjacent areas beyond the site boundary. There may be some limited construction activities across linear tracts across the Diablo Creek area. These work areas are inland of the well documented cultural resource area (Central Coast Chumash ancestral burying ground) located near the mouth of the Diablo Creek (Enercon, 2009). While the proposed tower areas have not been previously identified as having significant cultural or paleontological resource potential, such resources could be encountered during the course of construction. Installation of the refashioned intake system will be largely confined to previously disturbed subaqueous land, so there is little potential to encounter cultural or paleontological resources in that submerged area. Consequently, construction of the tower system is expected to pose a small negative impact.

The fully constructed tower system will permanently occupy previously undeveloped land so there some potential for permanent loss of areas with cultural or paleontological resources. The same is true for the nearshore intake facility. Collectively, operation of the passive draft dry/air cooling or mechanical (forced) draft dry/air cooling tower system could pose a small negative impact to cultural and paleontological resources.

Visual Resources

Construction of the tall passive draft dry/air cooling towers and even the lower profile mechanical (forced) draft dry/air system on the elevated terrain north of the power block area will still represent a significant change to this largely undeveloped area. Construction of the towers will pose a large negative impact.

The operating passive draft dry/air cooling or mechanical (forced) draft dry/air cooling tower structures will not generate a visible plume will, but its physical presence will still be intrusive to the local coastal area, that is dominated by undeveloped complex terrain (Irish Hills). Operation of these towers will still, therefore, pose a large negative impact.

Transportation

Increased commuting traffic from the construction workforces and construction deliveries could worsen the existing level of service on local roads during construction of the passive draft dry/air cooling or mechanical (forced) draft dry/air tower system. The construction period means that related traffic impacts will not be transitory and the peak workforce maybe significant. The estimated construction duration and workforce needs are described further in Section 4.8. Consequently, the transportation-related construction impacts should be considered a small negative impact.

Operationally, the passive draft dry/air cooling or mechanical (forced) draft dry/air tower system will increase maintenance and service requirements, but any related maintenance staff increases are expected to be modest. The air-cooled system will not produce a visible plume and pose not supplemental fogging or icing impacts. Consequently, this system will not pose any significant operational transportation impacts.

Socioeconomic Issues

While there will be additional construction-related employment opportunities, these opportunities are not expected to significantly strain local community resources (for example, housing, school, fire/police services, water/sewer).

Operational maintenance staff levels will increase in response to increased cooling tower and intake system maintenance and corrosion impacts (saltwater-supplied system only), but not result in any related community service or resource concerns.

Summary

Table CC-13 and 14 summarizes the air, water, waste, noise, marine and terrestrial ecological resources, land use, cultural and paleontological resources, visual resources, transportation, and socioeconomic environmental offsets for the passive draft dry/air cooling or mechanical (forced) draft dry/air cooling tower systems. The construction impacts are dominated by the moderate negative impacts to land use, terrestrial resources and the visual prominence of these tower structures on a previously undeveloped area of DCPP property and the adjoining area.

Operationally, passive draft dry/air cooling and mechanical (forced) draft dry/air cooling towers offer a mixed story regarding environmental impacts. Both dry cooling systems avoid the particulate emission and visual plume issues, but it still poses significant land use and visual impacts. These negative impacts are tempered by this closed-cycle cooling technology's ability to effectively mitigate the impingement, entrainment, and thermal impacts to marine life associated with the current once-through system. Viewed collectively, the construction and operational environmental impacts of passive draft dry/air cooling or mechanical (forced) draft dry/air cooling towers (all water supply options) offer no clear no clear overall consensus.

4.3.2.2 Wet Cooling Tower Systems – Wet Natural Draft, Wet Mechanical Draft, and Hybrid Wet/Dry Cooling

Air

Fugitive dust from earthwork and concrete activities associated with development of the wet tower systems could be significant. Diesel and gasoline engine emissions-related air emissions can be expected from work-force personal vehicles, over-the-road project, and off-road construction vehicles and equipment. There will be air emission sources on temporary offshore platforms or barges. Construction supplies and related circulating piping-related equipment deliveries may be significant in the early phases of construction. Collectively, these transient air quality impacts can be characterized as small negative.

From previous studies (Tetra Tech, 2008) it is clear that a saltwater wet tower systems will generate significant particulate emissions in quantities that will exceed the major source threshold for PM-10 (estimated 992 tons/year). The resulting deposition of salt from these cooling tower drift emissions will impact salt-sensitive species and increase onsite equipment corrosion potential. Related corrosion repairs could generate upwards of 50 tons of VOC from resurfacing and painting of impacted equipment. Obviously, these impacts would be reduced when considering fresh and reclaimed water supplies.

The particulate (salt drift) emission may also pose visibility impacts on the nearest visibility sensitive areas, so-called Class I areas that are comprised of national parks (over 6000 acres), wilderness areas (over 5000 acres), national memorial parks (over 5000 acres), and international parks that were in existence as of August 1977. The closest Class I areas to DCPP are Ventana Wilderness and San Rafael Wilderness. See Figure CC-15 for the location of these areas.

The wet tower systems will likely have a minor negative impact on DCPP overall plant efficiency, due to increases in cooling water temperature relative to the existing once-through system. The resulting decreases in power generation may result in minor increases in greenhouse gas or other pollutant emissions locally, if the replacement power comes from fossil power sources.

The saltwater wet tower operational impacts (deposition, corrosion, visibility) collectively represent a large negative impact. The freshwater and reclaimed water pose reduced air quality impacts, because the more limited PM-10 emissions given this water supply.

Surface Water

The addition of saltwater wet towers will involve some marine-based construction activities to refashion the intake system for the reduce closed-cycle cooling system withdrawal rates. This will have the potential to generate significant water quality impacts. Construction of the refashioned intake system will result in localized turbidity impacts from disruption of the local seabed. The construction efforts associated with building the cooling tower structures are expected to result in significant land-based disturbance and storm water-related impacts. Collectively, these surface water impacts are characterized as a moderate negative impact.

The saltwater tower system will substantially reduce seawater withdrawals rates (+90 percent reduction). Obviously, the fresh and reclaimed water usage rates will be further reduced relative to the seawater withdrawal because of the increased cycles of concentrations that are possible for these higher quality water resources.

Freshwater surface water use for industrial cooling purposes poses a moderate negative impact, in that such a valuable resources is generally devoted to a higher use (potable water, recreational use). Industrial use of this wastewater provides a small positive benefit, as this process reduces the overall volume of the final effluent reaching the environment.

Groundwater

While groundwater resources could be used to satisfy increase freshwater construction water demands (compaction, dust control, concrete), there is likely sufficient existing onsite water supplies to satisfy these needs.

Onsite groundwater resources will not be used in support of saltwater wet tower operation. However, this water resource could be used to satisfy or contribute to the operational water needs of the freshwater wet towers or used to supplement the water needs of the reclaimed water cooling tower system.

Groundwater use for industrial cooling purposes poses a moderate negative impact, in that such a valuable resources is generally devoted to a higher use (potable water, recreational use).

Waste

Constructions-related wastes, demolition wastes, and recyclable metals associated with modification of the existing inshore portions of intake system, will be generated during course of development of the wet towers. The proposed location of the towers, a sloped area north of the power block area will demand considerable earthwork to product a workable stair-step arrangement for the individual tower foundations. The associated earthwork material balance has not been prepared for this initial phase of the assessment. Marine dredge spoil volumes will also be generated.

The final disposition of these materials has not been determined. Most of the non-soil-related construction wastes are expected to have salvage value and therefore, not represent a burden to offsite disposal facilities. Disposal of surplus soil/rock or marine spoils, whether directed to an onsite or offsite disposal area, will represent a moderate construction negative impact.

Physical inspection and cleaning of the related intake system, as part of the maintenance program, may generate additional biological wastes. Collection and disposal of these marine wastes, therefore, can be categorized a small operational negative impact.

Noise

The County of San Luis Obispo County General Plan and Local Coastal Plan limit noise levels to 70 dBA at the property line of the affected (public area (Tetra Tech, 2008). Noise impacts from construction activities associated with the wet towers could be significant, but distance to the nearest offsite public property line is significant. The construction of the refashioned near-shore intake system is not expected generate significant noise impacts for land-based locations. Buffer areas around offshore construction zones will likely be established for safety reasons, but will also serve to reduce noise impacts to offshore noise receptors (watercraft) and shoreline areas that have public access. PG&E owns all coastal properties north of Diablo Creek to the southern boundary of Montana de Oro State Park and all coastal properties south of Diablo Creek for approximately 8 miles, so the potential for construction-related noise impacts to the public along property boundaries or shoreline areas is unlikely.

Operational noise levels are expected to increase because of related motors, power transmission units, and fans for the mechanically driven wet tower systems (wet mechanical [forced] draft cooling and hybrid wet/dry cooling) and from cascading water effects for all of the wet tower systems. While the noise-related impacts to onsite occupied buildings could rise above the target exposure limit, noise limits will not be enforced on DCPP property. The impact to operational noise levels from wet cooling tower operation and the resulting impacts to occupied onsite area are minimal.

Land Use

Construction activities associated with this system will be confined to a sloped area north of the power block area (still within the site boundary) that, though unoccupied, may have undergone some alteration during the course of DCPP construction and operation. The addition of wet cooling towers will represent a fundamental change to an area that has largely not been used for direct power plant operations.

Marine construction activities will also be conducted in the inshore area of the existing intake system. This work could temporarily preclude normal recreational activities in waters in the immediate construction areas. Buffer zones will be created and maintained during the course of construction for the safety of the workforce and public. The potential temporary restriction of normal public access in these marine areas combined with the significant construction activities the new cooling tower represents a moderate construction-related negative impact for this cooling technology option.

The wet tower systems and the modified inshore intake system collectively pose significant changes to the existing land use. The new cooling tower area will become part of the operating power plant with all of the attendant security and maintenance provisions. The modified intake system could represent a minor change to land use in previously undeveloped subaqueous areas adjacent to the existing near-shore portions of the existing intake system. Given these impacts, wet cooling tower systems are expected to offer a moderate term negative impact.

Marine Ecological Resources

Reconfiguring inshore portions of the existing intake system for the wet towers will result in significant localized turbidity impacts and some temporary and permanent loss of the biological productive near-shore marine habitat area—a small negative impact. Construction of the freshwater and reclaimed water-supplied tower systems will have no effect on marine resources.

Operationally, the saltwater wet cooling tower systems can effectively mitigate impacts to marine resources by limiting the through-screen velocity to less than 0.5 feet/second and reduce entrainment impacts because of its substantially reduced water withdrawal rate. The fresh or reclaimed water-supplied tower system completely avoids a seawater withdrawal and so completely avoids operational impacts to marine resources. It is important to note that the current DCPP once-through system results in the lowest impingement biomass rate (weight/gallons of water withdrawn) of all coastal power plants (Tenera, 2011). This is due primarily to its relatively confined engineering cove and exposed rocky coast, which create a localized environment where the local fish and shellfish population adapted to strong coastal currents and variable ocean surges making them somewhat resistant to the flow dynamics of cooling water intake systems. So while the wet cooling tower systems are fully regulatory compliant system, its positive attributes are somewhat tempered by the unusually effective performance of the existing intake system. The regulatory compliance attribute is sufficient to categorize the wet cooling tower system as a large positive impact.

Terrestrial Ecological Resources

The wet towers will be constructed in a largely unoccupied area of the DCPP plant property, which is situated north of the power block area and the intervening Diablo Creek, but still within the DCPP property boundary. The tower locations will be on situated on lands that may have been altered during the course of DCPP construction and operation. Consequently, some of these areas are expected to include ruderal species of nonnative grades and broadleaf weeds. There may also be some grassland and chaparral habitats in less disturbed upland portions of this proposed development area. Consequently, the tower area is expected to limited habitat potential and limited wildlife use. However, there will also be potential for impacts from the circulating water piping that will need to cross the intervening Diablo Creek sensitive riparian habitat area. There are various crossing systems that could be used to minimize impacts to this area (directional boring, elevated structures). Collectively, construction of the tower system is expected to pose a moderate negative impact.

The fully constructed tower system will permanently occupy previously undeveloped land with some modest habitat value and impact small portions of the more sensitive and valuable riparian habitat along Diablo Creek. This also equates to an operational moderate negative impact.

Cultural and Paleontological Resources

As described above, construction of the wet cooling tower system will be constructed in an unoccupied portion of the DCPP property that may have undergone some previous alteration. There may be some limited construction activities across linear tracts across the Diablo Creek area. These work areas are inland of the well documented cultural resource area (Central Coast Chumash ancestral burying ground) located near the mouth of the Diablo Creek (Enercon, 2009). While the proposed tower areas have not been previously identified as having significant cultural or paleontological resource potential, such resources could be encountered during the course of construction. Installation of the refashioned intake system will be largely confined to previously disturbed subaqueous land, so there is little potential to encounter cultural or paleontological resources in that submerged area. Consequently, construction of the wet tower systems are expected to pose a small negative impact.

The fully constructed tower system will permanently occupy previously undeveloped land so there is some potential for permanent loss of areas with cultural or paleontological resources. The same is true for the nearshore intake facility. Salt deposition and plume impaction from saltwater tower operation could accelerate the decay of local surface resources. Collectively, operation of the wet tower system could pose a small negative impact to cultural and paleontological resources.

Visual Resources

Construction of the tall wet natural draft cooling towers will demand equality tall construction equipment (for example, cranes, scaffolding). As the towers grow during the course of development, the visual impacts will increase and becoming increasingly out of character with the low profile structures in the area. Construction of the lower profile wet mechanical (forced) draft towers and hybrid wet/dry cooling towers on the elevated terrain north of the power block area will still represent a significant change in the largely undeveloped area. Construction of all of the wet tower options will pose a moderate negative impact.

The operating wet natural draft cooling and wet mechanical (forced) draft cooling towers with their potentially towering unabated plume will be very visually intrusive to the local coastal area, which is largely com-

posed undeveloped complex natural terrain (Irish Hills). These towers and associated plumes will also represent potential hazards to local aviation. Operation of these towers will pose a large negative impact.

The hybrid wet/dry cooling tower structure will include plume abatement features, which are expected to largely avoid the generation of visible plumes. While this will lessen the visual impacts of operation, the hybrid wet/dry cooling towers will remain prominent feature on a previously undeveloped area. Operation of these towers will, therefore, pose a moderate negative visual impact.

Transportation

Increased commuting traffic from the construction workforces and construction deliveries could worsen the existing level of service on local roads during construction of the wet tower systems. The estimated duration of construction activities and workforce requirements are described further in Section 4.8. Consequently, the transportation-related construction impacts should be considered a small negative impact.

Operationally, the wet tower systems will increase maintenance and service requirements, but any related maintenance staff increases are expected to be modest. Operation of the wet natural draft cooling and wet mechanical (forced) draft cooling tower systems also has the potential to increase the hours local fogging (and to lesser extent icing) on the limited nearby road systems. The fogging impacts could also impact local aviation and boating. The fogging impacts from tower operation qualify as a moderate negative impact. The hybrid wet/dry cooling tower system has only very limited to potential to increase local fogging conditions, so this system only poses a small negative impact.

Socioeconomic Issues

While there will be additional construction-related employment opportunities, these opportunities associated with construction of the wet tower systems are not expected to significantly strain local community resources (for example, housing, school, fire/police services, water/sewer).

Operational maintenance staff levels will increase in response to increased wet cooling tower and intake system maintenance and corrosion impacts (saltwater towers only), but not result in any related community service or resource concerns.

Summary

Table CC-13 through CC-17 summarizes the air, water, waste, noise, marine and terrestrial ecological resources, land use, cultural and paleontological resources, visual resources, transportation, and socioeconomic environmental offsets for the wet cooling tower systems. The construction impacts are dominated by the moderate negative impacts to terrestrial resources and the visual prominence of building these tower structures on a previously undeveloped, elevated area of DCPP property.

Operationally, the wet cooling towers offer a diverse story regarding environmental impacts. The tall profile wet natural draft cooling towers and their condensed plumes generate significant negative visual impacts. The wet mechanical (forced) draft cooling tower, though lower profile, also generates significant plume impacts. The towering plumes may increase the frequency and severity of local fogging conditions leading to hazardous road, flying, and boating conditions. Only the hybrid wet/dry cooling towers plume abatement features effectively mitigate the plume visual resource and transportation impacts of the other tower systems.

The saltwater wet towers all pose significant deleterious air quality and corrosion impacts from cooling tower drift salt emissions. These clearly large negative impacts are tempered by this closed-cycle cooling technology's ability to effectively mitigate the impingement, entrainment, and thermal impacts to marine life associated with the current once-through system. Viewed collectively, the construction and operationally environmental impacts of the wet saltwater towers have a definitive overall negative impact. The other water supply options offer no clear overall positive or negative consensus.

4.4 First-of-a-kind

4.4.1 General Discussion

All the five closed-cycle cooling systems are not first-of-a-kind technologies. All technologies have reference towers of comparable sizes that have been built and in operation for several years in the power industry, and some at nuclear sites. The DCPP site is not subject to weather extremes (extreme heat or cold) and thus the conditions the technologies would be subject to do not present any kind of first-of-a-kind risk. Detailed seismic analysis of each manufacturer's technology design was not performed as part of Phase I, but most of the technologies have been installed in areas of high-seismic activity and thus it is assumed that no first-of-a-kind fatal flaw is present with respect to seismic design. This is also described in more detail in Section 4.6.

4.4.2 Detailed Evaluation

There are an extensive number of references available for each technology, but there are only a couple given below because it is felt they are some of the more relevant references because they are of comparable size or application as to what is required for DCPP.

<u>Passive Draft Dry Cooling Towers</u>

1. Kendal coal fired power plant, 6 x 686 MWe, South Africa
2. Qinling coal fired power plant, 2 x 660 MW, China
3. Zuoquan coal fired power plant, 2 x 660 MW, China
4. Yangcheng thermal power plant, 2 x 600 MWe, China
5. Razdan PS, 2 x 310 MWe & 4 x 200 MWe, Armenia
6. Gebze & Adapazari combined cycle power plant, 3 x 800 MWe, Turkey

<u>Mechanical (Forced) Draft Dry Cooling Towers</u>

Note that the following reference list is applicable for mechanical draft air-cooled heat exchangers, which is the mechanical (forced) draft dry/air cooling technology considered in this study. Mechanical draft air-cooled condensers are not included in the list below

1. Bilibino nuclear power plant, 4 x 12 MWe, Russia (only known dry-cooled nuclear power plant in the world)
2. Mondugno combined cycle power plant, 800 MWe, Italy
3. Kaneka co-gen, 60 MWe, Japan (located at sea shore)

<u>Wet Natural Draft Cooling Towers:</u>

1. Beaver Valley Nuclear Station Unit 2, 846 MWe, USA-Pennsylvania
2. Grand Gulf Nuclear Station, Unit 1, 1297 MWe, USA- Mississippi
3. Watts Bar Nuclear Power Plant, Unit 1, 1123 MWe, USA-Tennessee
4. Rancho Seco Nuclear Generating Station, USA-California (has been decommissioned)

Wet Mechanical (Forced) Draft Cooling Towers (Circular):

1. Palo Verde Nuclear Generating Station, > 4,000 MWe, USA-Arizona
2. Great River Energy Coal Creek Station, 1,100 MWe, USA-North Dakota
3. Chinon B Nuclear Power Plant, 4 x 905 MWe, France
4. Columbia Generating Station nuclear, 1190 MWe, USA – Washington
5. River Bend Station nuclear Unit 1, 989 MWe, USA – Louisiana

Hybrid Wet/Dry Cooling Towers (Circular)

1. Neckarwestheim Nuclear Power Station (GKN 2), 1400 MWe, Germany
2. Sarlux integrated gasification combined cycle, 548 MWe, Italy

4.5 Operability General Site Conditions

4.5.1 General Discussion

The current source of cooling water for DCPP is the Pacific Ocean. The Pacific Ocean is the most reliable source of cooling water at DCPP, ensuring an uninterrupted supply for the cooling requirements of operating plant as well as the nuclear safety-related systems. Conceptual designs were developed for five closed-cycle cooling systems to minimize any negative impacts to current plant configuration, operation, and output as much as possible. The design bases were developed from site climatic conditions and enveloping thermal criteria that would mimic once-through cooling operation as closely as possible, by considering the lowest realistic cold water temperature achievable with a specific technology with high ambient temperatures.

4.5.2 Detailed Evaluation

This study performed for evaluation of closed-cycle cooling water system is based on the existing cooling requirements for circulating water system for DCPP Units 1 and 2. The circulating water system is currently designed to condense exhaust steam from the low-pressure turbines and to dissipate heat loads associated with the service cooling water heat exchangers, condensate cooler, intake cooling water heat exchangers, and the chlorination system. Documents providing technical information obtained from PGE were largely used to develop the basis for the closed- cycle cooling tower design. Where possible, the questionable values and/or clarifications were verified and/or confirmed by PGE.

Although most of the current seawater entering the intake structure is pumped through the main condenser via circulating water system, a small portion of the intake seawater flows in to the auxiliary saltwater system. The auxiliary saltwater system supplies cooling water for the nuclear safety-related component cooling water system. Each unit at DCPP has two redundant auxiliary saltwater system trains and each train is capable of providing adequate cooling flow to the component cooling water system heat exchangers to ensure safe shutdown of a unit under normal and accident conditions. Due to the safety-related requirements of the auxiliary saltwater system, the conceptual design of the closed-cycle cooling system for DCPP will not include modifying the existing auxiliary saltwater system and the closed-cycle cooling system described in this study shall not include safety-related equipment. In event of a failure in the closed-cycle cooling system, the plant will able to achieve the safe shutdown under its current safety design features.

The design heat duty and circulating water flows for the conversion of DCPP Units 1 and 2 once-through system are summarized as follows:

Design Heat Load and Flow Rates - DCPP Units 1 and 2

		Current Once-through cooling system	Closed-Cycle Cooling System	Source of Information
Main Condenser, each unit	MMBtu/hr	7898	7898	DCPP Main Steam Condenser Data & Description (LCM Report 2003 Rev 0, dated July 16, 2003) shows heat duty of 7,600 MMBtu/hr. The estimated heat duty using Alstom heat balance 75V1754-28 and 75V1754-31 for Unit 1 and Unit 2 respectively is 7773 MMBtu/hr and 7898 MMBtu/hr respectively. Using the worst case heat duty of 7898 MMBtu/hr.
Service Cooling Water Heat Exchangers, each unit	MMBtu/hr	19	19	Service Water Heat Exchanger Data Sheet dated 8/23/68 by Thermxchangers, Inc.
Intake Coolers, each unit	MMBtu/hr	4.0	4.0	Per notes on the Xcel spreadsheet – Plant Thermal Heat Duty estimation - developed by Bechtel and confirmed by DCPP
Condensate Coolers, each unit	MMBtu/hr	25	25	Per telephone discussion with Joseph Anastasio of DCPP
Auxiliary Saltwater System component cooling water system Heat Exchanger, each unit	MMBtu/hr	325	0	Auxiliary Saltwater System Training Guide dated 05/27/09, Title E-5, Rev. 14
Total Heat Load, each unit	MMBtu/hr	8,271	7946	
Temperature Rise in Main Condenser, each unit	F	18	18	
Circulation Water Flow, each unit	gpm	878,000	882,889	

** Heat duty includes does not include auxiliary saltwater system cooling duty, because this safety-related system will not be serviced by the closed-cycle cooling towers.

Site Ambient Conditions

DCPP is located approximately 8 miles north-northwest of Avila Beach in San Luis Obispo County. The design ambient temperatures (dry and wet bulb) used on the development of overall cooling tower design are based on the 0.4 percent exceedance temperatures as obtained from engineering weather data for Santa Barbara (closest to DCPP).

Design dry bulb temperature: 83 ºF

Design wet bulb temperature: 68 ºF

Plume free design point (dry bulb/relative humidity, RH): 33 ºF/90%

Plant Performance

The size of a closed-cycle cooling system is primarily based on the thermal load rejected to the cooling tower and approach to ambient dry or wet bulb temperatures. A closer approach will result in the larger tower producing colder water temperature assuming design cooling range and terminal temperature difference remain unchanged.

Due to physical area constraints at the DCPP site, conceptual design of closed-cycle cooling towers is focused on limiting the physical size of tower while maximizing the thermal performance. The vendors have designed the passive draft dry/air cooling and mechanical (forced) draft dry/air cooling towers based on approach of 20°F to design dry bulb temperature, while for wet natural draft cooling and wet mechanical (forced) draft cooling including hybrid wet/dry cooling towers with approach of 12°F and 9°F, respectively, to wet bulb temperature. These approaches were developed based on iterative investigations with closed-cycle cooling technology suppliers. The cooling towers with these approach temperatures will provide the cold water temperatures exceeding the existing maximum allowable temperature. This may impact the design and operation of closed cooling water system components that will be evaluated in details during Phase 2.

The estimated condenser pressure, steam turbine gross output change and parasitic loads are developed using Alstom's Steam Turbine Balance (HTGD040131) dated September 16, 2003 and are summarized for closed-cycle cooling system technologies in the following table:

Operational Impacts Per Unit

Ambient dry bulb temperature, °F		83	83	83	83	83
Ambient wet bulb temperature, °F		68	68	68	68	68
Design	current - once-through	Passive Draft Dry/Air Cooling	Mechanical (Forced) Draft Dry/Air Cooling	Hybrid Wet/Dry Cooling	Wet Natural Draft Cooling	Wet Mechanical (Forced) Draft Cooling
Circulating water flow, gpm	878,000	883,000	883,000	883,000	883,000	883,000
Cooling water inlet temperature, °F at Tower		121	121	95	98	95
Cooling water outlet temperature, °F at Tower		103	103	77	80	77
Condenser cleanliness factor, %	85	85	85	85	85	85
Condenser pressure, in HgA	1.71	5.3	5.3	2.7	2.9	2.7
Steam Turbine output change, %	Base	-10.5	-10.5	-3.7	-4.4	-3.7
Steam Turbine output change, MW	Base	-125.5	-125.5	-44.4	-52.3	-44.4
Tower fans auxiliary load, MW		0	39.3	23.8	0	14.4
Additional circulating water pumps auxiliary load change (Note 3), MW	Base	7.6	7.6	4.6	4.6	2.6

Notes:

1. The base steam turbine output: 1,191,521 kWe

2. Base steam turbine output and backpressure from Alstom heat balance 75V1754-29, "Unit 1: Maximum Guaranteed – Post LP Retrofit"

3. Additional circulating water auxiliary loads change represent the difference between the new circulating water pumps for the closed-cycle cooling towers and existing circulating water pumps for once-through cooling system. It does not reflect any auxiliary load changes to other circulating water systems and/or closed component cooling systems

* * *

The turbine output changes provided above will vary with ambient conditions. Based on engineering weather data, high ambient conditions were selected for the analysis because the highest temperatures for the site would result in the worst performance from the cooling equipment and thus the table above is an approximation of the highest impacts to current plant operation, as well as the greatest output delta in between the technologies. The analysis was also done this way to ensure that the turbine could operate under all ambient conditions for each technology.

The quantitative effects of wind on each technology were not considered in this study, but it is important to note that wind can cause substantial performance degradation for the mechanical draft technologies by impacting fan performance. Site-specific wind analysis can be performed as part of Phase II.

LP Turbine Exhaust Pressure at DCPP

The condenser pressure will be relatively higher than existing once-through cooling system due to cold water temperature being higher than once-through cooling water temperature. The condenser pressure is expected to be in the range of approximately 5.3 inches HgA for the dry/air (passive draft dry/air cooling and mechanical (forced) draft dry/air cooling) closed-cycle cooling systems, while it is approximately 2.7 to 2.9 inches HgA for wet (hybrid wet/dry cooling, wet natural draft cooling, and wet mechanical (forced) draft cooling) closed-cycle cooling systems at the ambient design dry bulb/wet bulb temperature. These condenser pressures are much below the turbine alarm point of 9.0 inch HgA (Alstom, 2003)

Reduction in Power Generation

Because of higher condenser pressure than the existing once-through cooling system, the power produced by plant will be less. The reduction in steam turbine generator output is expected to be approximately 10.5 percent for the dry/air (passive draft dry/air cooling and mechanical (forced) draft dry/air cooling) cooling systems and in the range of 3.7 to 4.4 percent for wet (hybrid wet/dry cooling, wet natural draft cooling, and wet mechanical (forced) draft cooling) cooling systems. This is a result of the cold water temperature achievable for each technology.

Potential Modifications to Main Condenser and Other Cooling Components

The budgetary quotes and physical sizing of closed-cycle cooling towers obtained from vendors are based on the existing thermal loads on the main condenser and other associated cooling components. However, some potential modifications to main condenser may be required due to increased circulating water pressure result-

ing from increased total circulating water pumps head required to raise water to higher elevation of the cooling tower. The other associated cooling components may also require modifications due to potentially exceeding maximum allowable temperature of cold water temperature resulting from cooling tower design and practically achievable approach temperatures. The increase in circulating water pressure is estimated to be in the range of 10 to 40 percent based on the wet and dry closed-cycle systems respectively. This may result in the need for modifications to the condenser.

The all closed-cycle cooling systems will be designed to supply circulating water with flows, pressures, and temperatures as close as possible to existing conditions at DCPP. Since the cooling water tower design is normally based on the approach temperatures to ambient conditions, the cold water temperatures from the cooling tower design will be higher compared to existing conditions. Similarly the cold water pressures will also be relatively higher due to cooling tower elevation. As a result of this, the changes to the pumps, valves, and other cooling components operation may occur. These system evaluations will be performed in Phase 2.

4.6 Seismic and Tsunami Issues

4.6.1 General Discussion

The DCPP site is located on a south facing section of the open California coast. A breakwater was erected with the original construction of the plant because there was neither a bay nor offshore islands to provide wave protection.

Design basis high water levels are the result of postulated wave runup caused by a tsunami coincident with a high ambient tide and short period storm waves. The breakwater affords a level of protection against such an occurrence. It is required per the plant's Technical Specifications to be maintained for protection of the safety-related auxiliary saltwater system pumps in the intake structure that supply the plant's emergency cooling water.

For distant generators (subterranean earthquakes, submarine landslides, etc) the estimated maximum tsunami wave runup is approximately 16 feet. Distant sources relative to the site are in the Aleutian area, the Kuril-Kanichatka region and along the South American coast.

For local tsunami generators (the Santa Lucia Bank Fault, approximately 29 miles offshore of the site, and the Santa Maria or Hosgri Fault, approximately 3.5 miles offshore of the site) the estimated maximum runup at the intake structure is approximately 29.4 feet. This includes the effect of some slumping of the breakwater due to the initiating seismic event. The design basis flood level is 30 feet.

All of the closed-cycle technology applications being considered for DCPP would be constructed in an area of the plant that is well above the maximum tsunami wave height and the design basis flood level.

4.6.2 Detailed Evaluation

The cooling towers are to be located at higher elevations and further from the shoreline (relative to the plant's existing safety-related structures) so the tsunami protection of the cooling towers will be superior to that of the rest of the plant. It is possible that additional tsunami protection will be mandated by the NRC as a beyond-design-basis concern for the entire plant at a later time in view of post-Fukushima concerns. However, this is outside of the scope of the current evaluation.

For seismic requirements, the current California Building Code invokes ASCE Standard 7-05. It is likely that by 2015, the next version, ASCE 7-10, will be invoked in the new California Building Code. In either case, Table 15.4-2 of ASCE 7 places no height limit on cooling towers. As such, seismic/structural design will be feasible strictly from code compliance standpoint for steel/concrete cooling towers of any height.

Seismic and Wind Load Considerations: passive draft dry/air cooling towers and the wet natural draft cooling towers will be quite tall at approximately 600 feet will and require the shell to be discontinued at the base to allow air passage, using braced legs at supports. Failure of any of the bracing members can lead to shell buckling and/or general loss of gravity load carrying capability. Also, there is a potential for significant change in lateral stiffness and strength at the base because of the change from shell to braces. The subject applications are in areas of high-seismic requirements, so these considerations will result in passive draft dry/air cooling and wet natural draft cooling structural elements and connections that are quite robust and difficult to detail (in terms of seismic detailing requirements).

Wind loads can be significant, and are a governing design consideration for tall towers. The wind load analysis can be further complicated because of *group effect*, which will be significant because of the relatively close spacing of the towers envisioned for DCPP. This will require wind tunnel testing and expert assessments to develop sound wind-resistant design.

Finally, because of their size and aesthetic impact (such tall towers are signature structures that dwarf everything around them), it is likely that they will receive intense scrutiny from building officials, peer reviewers, and interveners. All these factors will drive up the cost of design and construction for passive draft dry/air cooling and wet natural draft cooling options.

The hybrid wet/dry cooling towers have two levels of fan decks (lower deck for wet section and upper deck for dry section), resulting in an additional 50-foot height relative to the cooling tower associated with wet mechanical (forced) draft cooling. For both cases, it is assumed that the vertical heat exchangers on the outer perimeters will be supported off the latticed structural framing at the base of the cooling tower. The additional 50-foot height of the hybrid wet/dry cooling tower will result in higher seismic loads on the supporting structural elements.

At approximately 103 feet tall, the cooling towers for mechanical (forced) draft dry/air cooling have the lowest height profile, which is very desirable from seismic/structural design standpoint. At approximately 125-foot tall, the wet mechanical (fixed) draft cooling towers will also be relatively short and desirable from seismic/structural standpoint.

Summary

All cooling technologies are considered viable from a tsunami, seismic and structural perspective. However, from efficient design and construction perspective, the wet mechanical (forced) draft cooling is considered most attractive for DCPP (since there is no sufficient space at DCPP site for the mechanical (forced) draft dry/air cooling option). The hybrid wet/dry cooling tower option is also considered to be efficient option, and warrants further consideration when making the final selection.

4.7 Structural

4.7.1 General Discussion

Design criteria will be similar to the existing structures and any of the closed-cycle technologies can be properly designed against design seismic requirements and wave forces.

4.7.2 Detailed Evaluation

Structural aspects are addressed in the *Seismic and Tsunami Issues* section above, above because the evaluation of all of these criteria are related.

4.8 Construction

4.8.1 General Discussion

The closed cooling systems for DCPP are considered feasibly constructible based on current day construction methods, practice, and knowledge. However, all of the systems will have their own challenging issues, and degree of difficulty.

The construction work activities for all the closed cooling systems are very similar for each technology, but will vary in quantities and schedule duration for accomplishing the tasks. The basic work activities are as follows:

- Closed-cycle cooling system work activities
- Mobilize/temporary facilities/utilities and training
- Install temporary environmental controls
- Excavate and grade tower areas
- Excavate pump house/water treatment areas
- Excavate underground piping, ducts, and electrical bank areas
- Install piling/foundations/slabs/basins (towers/pump houses/electrical building)
- Install underground ducts/electrical duct bank and underground piping/valves
- Install structures (towers/pump houses/electrical buildings)
- Install aboveground piping, valves, hangers and supports
- Install electrical equipment (motor control centers (MCCs)/switchgear/transformers)
- Install aboveground conduit and cable tray
- Install power and control cable/terminations
- Install lighting, aviation lighting/lightening protection
- Control room modifications
- Startup testing
- Replace system tie-ins and decommission modifications to existing systems and equipment that would no longer be used.
- Commissioning
- Clean up and demobilizes

4.8.2 Detailed Evaluation

All the closed cooling systems for DCPP will require massive excavation cut and fill operations of the mountain area north of the site. The excavation plan will include leveling the mountain peaks that range from over 450 feet to over 650 feet in elevation down to a level grade of approximately 115 feet above mean sea level to create a level foundation for each of the towers. It is favorable to construct all of the towers at the same elevation to avoid any strange air patters that may occur if there are hills and valleys in close proximity to the towers, or if intakes and discharges of neighboring towers are located at different heights. Air swirls may negatively impact tower performance in various ways including starving the air inlets, disrupting design airside static pressure through the towers, or inducing recirculation. The high shear wave velocity of the mountain material would exceed dozer rip ability production, and would require considerable controlled blast demolition excavation to raze the mountain areas to locate the cooling towers and pump houses. Benched excavations may be used to locate the towers on varying elevations to minimize the total quantity of excavated material. A positive aspect of the rock site is that tunnel boring machines may be used for the installation if the circulating water ducts.

- Use of passive draft dry technology will require six towers per unit for a total of twelve towers, six of that will not fit the on the current Owner-controlled site area. Six of the twelve towers would be required to be located to the north or west, outside the Owner-controlled area. The excavation quantity and construction times will be developed during Phase 2 of this study but based on a review preliminary estimate is that these towers would require excavation of over 48 million cubic yards of rock and the excavation activities would take approximately 5.5 years to complete. Complete construction of the passive draft dry/air cooling towers is estimated to take over 8 years using a peak workforce of 615.

- Mechanical forced draft dry will require one tower per unit for a total of two towers, one of which will not fit the on the current Owner-controlled site area. One of the two towers would be required to be located to the north, outside the Owner-controlled area. The excavation quantity and construction times will be developed during Phase 2 of this study but based on a review preliminary estimate is that these towers would require excavation of over 48 million cubic yards of rock and the excavation activities would take approximately 5.5 years to complete. Complete construction of the mechanical (forced) draft dry/air cooling towers for both units is estimated to take over 8 years using a peak workforce of 615.

- Both wet natural draft cooling and wet mechanical (forced) draft cooling towers as well as the hybrid wet/dry cooling technology will require two towers per unit for a total of four towers. The four towers footprint will fit the on the current Owner-controlled site area, however, these options are still subject to the excavation considerations given below due to the mountainous terrain of the Owner-controlled area where these towers could be located. The excavation quantity and construction times will be developed during Phase 2 of this study but based on a review preliminary estimate is that these towers would require excavation of over 24 million cubic yards of rock and the excavation activities would take approximately 2.75 years to complete. Complete construction of any of the wet technologies for both units is estimated to take over 6.25 years using a peak workforce of 615.

4.9 Maintenance

4.9.1 General Discussion

Compared to the existing once-through system, there are considerably greater operation and maintenance efforts associated with use of any of the closed-cycle cooling technologies compared to the existing once-

through shoreline intake. O&M major concerns are mainly associated with the mechanical draft technologies and include ensuring proper lubrication and operational settings of associated mechanical components. Additionally, routine inspection activities are necessary to ensure that the materials remain in good condition. All of the technologies require maintenance and inspections to ensure the water distribution and heat transfer surfaces are in optimum condition and not clogged or dirty. The environmental impacts associated with the increase in activities were evaluated in section 4.3 and a detailed list of the major actions that should be performed as part of a diligent maintenance program for each of the 5 technologies is included below. No fatal flaws are associated with any of these activities as long as proper personal protection equipment is considered, site operational safety procedures are closely followed (including lock-out, tag-out when required, etc.), and the cooling tower manufacturer is required to provide permanent access with appropriate barriers (such as ladders with locking spring-loaded gates to all levels requiring maintenance access) for the supplied technologies. While no fatal flaws are apparent, the scale of jobhours required for completion of the activities will need to be considered and planned for and DCPP may need to hire additional personnel with the sole responsibility of ensuring the maintenance requirements are met for the selected technology.

There are additional equipments that could be purchased that can help to reduce jobhours required to perform gear-box lubrication oil change-out and reduce the volume of hazardous waste disposal of used oil. These include oil filtration systems and their purchase and use is at the discretion of DCPP personnel.

4.9.2 Detailed Evaluation

Table CC-8 reflects some of the major cooling tower maintenance activities and it indicates to which technology the activity is applicable. Ultimately, the tower supplier will provide a recommended maintenance schedule for the technology provided. The following maintenance activities are typical of what is recommended during normal tower operation. Additional activities may be required during extended shut-down or other abnormal operational modes.

Activity	Recommended Frequency (Tower Supplier Should be Consulted to Develop Formal Program for the Selected Technology)	Passive Draft Dry/Air Cooling	Mechanical (Forced) Draft Dry/Air Cooling	Wet Natural Draft Cooling	Wet Mechanical (Forced) Draft Cooling	Hybrid Wet/Dry Cooling
Check condition of finned-tube heat exchangers	Quarterly	✓	✓			✓
Cleaning of fins on heat exchanger tube bundles	Semiannually or as needed	✓	✓			✓
Operating ball cleaning system for tube internal surfaces	Semiannually or as needed	✓	✓			✓
Check for and repair/replace missing or broken water distribution pipes or nozzles	Monthly	✓	✓	✓	✓	✓
Weigh fill packs to characterize fouling	Annually			✓	✓	✓
Check for and repair/replace missing or broken fill packs	Quarterly			✓	✓	✓
Check for and repair/replace missing or broken drift eliminator	Quarterly			✓	✓	✓

Activity	Recommended Frequency (Tower Supplier Should be Consulted to Develop Formal Program for the Selected Technology)	Passive Draft Dry/Air Cooling	Mechanical (Forced) Draft Dry/Air Cooling	Wet Natural Draft Cooling	Wet Mechanical (Forced) Draft Cooling	Hybrid Wet/Dry Cooling
packs						
Check for and repair/replace missing or broken drift eliminator seals	Quarterly			✓	✓	✓
Check oil level in gear box	Daily		✓		✓	✓
Check for foreign material in gear box oil	Every 2 weeks		✓		✓	✓
Replace oil in gear box	Semiannually		✓		✓	✓
Check backlash and endplay of gear box shafts	Semiannually		✓		✓	✓
Ensure no buildup or other deposits are present on exterior surface of gear box (any inhibitors of proper cooling)	Semiannually		✓		✓	✓
Inspect gear box gears for wear and corrosion	Semiannually		✓		✓	✓
Check and adjust alignment of driveshaft	Semiannually		✓		✓	✓
Check and adjust fan pitch angles	Quarterly		✓		✓	✓
Check and adjust fan blade tracking	Quarterly		✓		✓	✓
Check and adjust fan blade tip clearance	Quarterly		✓		✓	✓
Check tightness of fan bolts	Quarterly		✓		✓	✓
Ensure fan weepholes are clear	Quarterly		✓		✓	✓
Check tightness of structural connecting bolts	Annually	✓	✓	✓	✓	✓
Check for and replace any fan blade wear or defects	Quarterly		✓		✓	✓
Check operating mechanical equipment for excessive noise	Daily		✓		✓	✓
Check vibration levels of operating mechanical equipment	Daily		✓		✓	✓
Check condition and repair if necessary – concrete shell	Annually	✓		✓		
Check proper attachment and condition of the airseal	Annually			✓		
Check condition of protective epoxy coating/sheeting - steel shell	Annually			✓		
Check for scale, algae, etc. to ensure water treatment is adequate	Weekly			✓	✓	✓
Check cold water basin level	Daily			✓	✓	✓

Activity	Recommended Frequency (Tower Supplier Should be Consulted to Develop Formal Program for the Selected Technology)	Passive Draft Dry/Air Cooling	Mechanical (Forced) Draft Dry/Air Cooling	Wet Natural Draft Cooling	Wet Mechanical (Forced) Draft Cooling	Hybrid Wet/Dry Cooling
Inspect cold water basin and repair any cracks or coating defects as necessary	Semiannually			✓	✓	✓
Relubricate motor bearings	Semi-annually		✓		✓	✓
Ensure no buildup or other deposits are present on exterior surface of motor (any inhibitors of proper motor cooling)	Semiannually		✓		✓	✓
Check proper operation of valves	Monthly	✓	✓	✓	✓	✓
Lubricate valves	Quarterly	✓	✓	✓	✓	✓
Check proper operation of dampers	Monthly					✓
Check condition of flanged and threaded connections and replace gaskets as necessary	Monthly	✓	✓	✓	✓	✓
Check steel structures for evidence of corrosion	Annually	✓	✓	✓	✓	✓
Check function of and replace bulbs as necessary – aircraft warning lights on top of shell	Daily	✓		✓		

5. Conclusion

Replacing the DCPP once-through cooling systems with any of the five variants of closed-cycle cooling technologies evaluated is technically feasible. These five variants will, therefore, likely be viewed as complying with the Section 316(b), *California Once-Through Cooling Policy*, Phase 2 rules on impingement and entrainment reduction because those reductions are considered equivalent to reductions in intake flow rate.

Using closed-cycle technology for all of the existing once-through cooling systems—except for safety-related systems and components—results in dramatic reduction of cooling water withdrawals from the Pacific Ocean.

For the wet and hybrid technologies, it was determined that saltwater is not feasible for use as the circulating water due to significant PM-10 emissions and lack of related necessary offsets, as described in Section 4.1. The only water sources that can be used are fresh and reclaimed water, which are assumed to be available from wells and water treatment facilities, and, thus, impingement/entrainment concerns are eliminated. The dry technologies will not require a continuous water makeup source after the closed system is initially charged because there will be no evaporative or drift losses and makeup will only be required for small system leaks or other minimal losses. Thus, impingement/entrainment concerns are minimized.

While not an evaluated part of this phase of the study, the saltwater demand of the safety-related, once-through cooling system is approximately 2 to 5 percent of the current total saltwater demand. By substituting

closed cooling cycles for all but that system, the saltwater demand is reduced by approximately 95 to 98 percent.

It must be noted that the feasibility of closed-cycle cooling includes substantial technical and operational challenges. These include routing and constructing the plant infrastructure for the tower circulating/ cooling water in such a fashion as to minimize disruption of current operation of both units, the tower location and construction challenges, the significant de-rate of the units' electrical output due to increased condenser back pressure and lower plant efficiency, and the parasitic loads and the added maintenance burden associated with the mechanical draft tower technologies. Equally significant are the predictably contentious permitting process and the visual impacts resulting from the imposing tower sizes and the discharge plumes. The table below highlights the major challenges.

Nonetheless, these challenges do not represent fatal flaws at this stage of the assessment. See Table CC-1 for a summary presentation of the Phase 1 findings and conclusions.

The five variants of closed-cycle cooling are, therefore, candidates for further detailed evaluation in Phase 2 of this study.

	Passive Draft Dry/Air Cooling	Mechanical (Forced) Draft Dry/Air Cooling	Wet Natural Draft Cooling	Wet Mechanical (Forced) Draft Cooling	Hybrid Wet/Dry Cooling
Estimated Decrease in Turbine Output per Unit, MW	125.5	125.5	52.3	44.4	44.4
Estimated Total Plot Area Requirement for Both Units, ft²	6.618 million	3.004 million	1.629 million	2.647 million	2.647 million
Visible Plume	No	No	Yes	Yes	No
Associated Air Emissions	No	No	Yes	Yes	Yes
Required Parasitic Loads per Unit (includes fan power and increased circulating water pump power), MW	7.6	46.9	2.6	17	26.4
Contentious Permitting process	Yes	Yes	Yes	Yes	Yes

6. References

Alstom – Steam Turbine Balance HTGD04031 Diablo Canyon LP Retrofit – Thermodynamic Information dated 16 September 03

Alstom curve – Load Operation Protection Diagram – HTGD493710) at the turbine loads of 75 to 100 percent.

Alstom heat balance 75V1754-28 for Diablo Canyon Unit 1: Maximum Calculated – Post LP Retrofit VWO

Bishop, J. Policy on Use of Coastal and Estuarine Waters for Power Plant Cooling – CalEPA, SWRCB, 2011

California Coastal Power Plants: Alternative Cooling System Analysis for Diablo Canyon Power Plant, prepared by Tetra Tech

California's Coast Power Plants: Alternative Cooling System Analysis, Section C. Diablo Canyon Power Plant, Tetra Tech, 2008

Comments – Proposed EPA Section 316(b) BTA Impingement Standard - Open Coastal Power Plants Using Once-Through Cooling (PG&E Diablo Canyon Power Plant), Tenera Environmental, July 2011.

DCPP Unit 1 & 2 FSAR Update Section 10.4 - dated November 2006 Rev 17

DeLeon, J., California State Lands Commission (personal communications, April 16, 2012)

Detmer, A., California Coastal Commission (personnel communications, April 17, 2012)

Diablo Canyon Power Plant – Auxiliary Salt Water System Training Guide E-5 dated 5/27/09

Diablo Canyon Power Plant – Circulating Water System Training Guide E-4 dated 5/6/10

Diablo Canyon Power Plant Cooling Tower Feasibility Study, Enercon Services, Inc., March 2009

Diablo Canyon Power Plant Cooling Tower Feasibility, Tetra Tech, March 2009.

Environmental Offsets Position No. 9, Government of Western Australia (GWA), January 2006

Excel spreadsheet attached to e-mail from Cunningham, Bryan, K. of PGE to Dismukes, Douglas, of Bechtel dated May 88, 2012, 12:58 a.m.

Exchanger Specification Sheet for Service Water Heat Exchanger DC-663012-2-1 dated 8/23/68

Expected Condenser Performance for Unit 1 & 2 DC 663041-93-2 Rev 2, DC 663041-94-2 Rev 2, DC 663041-120-1 Rev 1, DC 663041-121-1 Rev 1, and DC 663041-122-1 Rev 1.

Feasibility Study for Installation of Cooling Towers at San Onofre Nuclear Generating Station, Enercon Services, Inc.

Hostetter, R., San Luis Obispo County Planning and Building Department, April 17, 2012)

Jauregui, R., State Water Resources Board (personnel communications, May 2, 2012)

Kroger, Detlev G. Air-Cooled Heat Exchangers and Cooling Towers. Vol. 1, PennWell Corporation, 2004.

Lambert, J., U.S. Army Corps of Engineers (personal communication, April 11, 2012)

LCM – Main Condensers - Condenser Description dated July 16. 2003 Rev 0

License Renewal Application Diablo Canyon Power Plant Unit 1 and 2 - Appendix E Applicants Environmental Report – Operating Renewal Stage (Chapter 4), PG&E, November 2009

Luster, T., California Coastal Commission (personal communication, April 17, 2012)

NRC Supplemental Safety Evaluation Report #1, dated 1/31/75

NRC Supplemental Safety Evaluation Report #5, dated 9/10/76

NUREG-0675, NRC SER for DCPP Units 1 and 2, Supplement 1 (dated 1/31/75),

Oggins, C., California State Lands Commission (personal communications, April 16, 2012)

Proposed Regulations to Establish Requirements for Existing Cooling Water Intake Structures at Existing Facilities, EPA – 820-F-11-002, USEPA, March 2011.

Supplement 5 (dated 9/10/76) and Supplement 7 (dated 5/26/78).

The list of all DCPP documents that were furnished to Bechtel and that have been used to develop the input data and evaluation criteria are as follows:

Von Langen, P., Central Coast Regional Water Quality Control Board (personal communication April 16, 2012)

Willey, G., San Luis Obispo Air Pollution Control District (personal communication, April 19, 2012)

Willey, G., San Luis Obispo Air Pollution Control District (personal communication, April 20, 2012) – attached file, BANKLOG_current_Apr_2012.xlsx

Bishop, J. Policy on the Use of Coastal and Estuarine Waters for Power Plant Cooling, Joint Agency

Workshop on Emissions Offsets Challenge for Fossil Power Plants for Southern California, 2011

California's Coast Power Plants: Alternative Cooling System Analysis, Section C. Diablo Canyon Power Plant, Tetra Tech, 2008

Comments – Proposed EPA 316(b) BTA Impingement Standard - Open Coastal Power Plants Using Once-Through Cooling (PG&E Diablo Canyon Power Plant), Tenera Environmental, July 2011.

DeLeon, J., California State Lands Commission (personal communications, April 16, 2012)

Detmer, A., California Coastal Commission (personnel communications, April 17, 2012)

Environmental Offsets Position No. 9, Government of Western Australia (GWA), January 2006

Hostetter, R., San Luis Obispo County Planning and Building Department, April 17, 2012)

Jauregui, R., State Water Resources Board (personnel communications, May 2, 2012)

License Renewal Application Diablo Canyon Power Plant Unit 1 and 2 - Appendix E Applicants Environmental Report – Operating Renewal Stage (Chapter 4), PG&E, November 2009

Lambert, J., US Army Corps of Engineers (personal communication, April 11, 2012)

Luster, T., California Coastal Commission (personal communication, April 17, 2012)

Oggins, C., California State Lands Commission (personal communications, April 16, 2012)

Von Langen, P., Central Coast Regional Water Quality Control Board (personal communication April 16, 2012)

Willey, G., San Luis Obispo Air Pollution Control District (personal communication, April 19, 2012)

Table CC-2.
San Luis Obispo Air Pollution Control District Emission Reduction Credit Banking Registry Excerpt (April 2012)

Application Number	Company	Action Date	Action Type	Certificate Number	SOx tons/year Emission Reduction Credits	PM-10 tons/year Emission Reduction Credits
none	CBC Funding	11-5-91	deposit	none	0.000	0.000
1509	SP Milling	03/17/92	deposit	S-2860-ZA-1	0.000	0.644
1619	Union Asphalt	01/15/93	deposit	U-3022-ZA-1	0.000	1.470
1742	Union Asphalt	04/20/93	deposit	U-3022-ZA-2	2.600	0.000
1838	Unocal SMR	06/29/94	deposit	U-3031-ZL-1	0.000	0.000
1838	Unocal SMR	06/29/94	deposit	U-3031-ZL-2	0.000	0.000
1916	Unocal Battles	12/15/96	deposit	SBAPCD none	0.000	0.000
1916	Unocal SMR	12/15/96	withdraw	SBAPCD none	0.000	0.000
1859	Unocal Guad	01/07/97	deposit	U-3032-Z-1	2.968	0.088
1916	Unocal SMR	01/31/97	withdraw	U-3031-ZL-1	0.000	0.000
2043	Unocal SMR	01/31/97	deposit	U-3031-ZL-3	0.000	0.000
2189	Unocal SMR	03/20/97	withdraw	U-3031-ZL-3	0.000	0.000
2189	Unocal SMR	03/20/97	deposit	U-3031-ZL-4	0.000	0.000
2236	Unocal	06/05/97	withdraw	U-3032-Z-1	-2.968	-0.088
2236	Unocal	06/05/97	deposit	U-3032-Z-2	2.968	0.088
2188	Chevron	07/16/97	deposit	C-1215-ZH-1	0.000	0.000
2147	Chevron	07/16/97	deposit	C-1232-Z-2	0.000	0.000
2190	Chevron	07/16/97	deposit	T-2909-ZA-1	0.000	0.000
2192	Chevron	07/16/97	deposit	A-1077-ZA-1	0.000	0.000
2158	Chevron	07/16/97	deposit	C-1232-Z-1	0.000	0.000
2188	Chevron	07/16/97	withdraw	C-1215-ZH-1	0.000	0.000
2147	Chevron	07/16/97	withdraw	C-1232-Z-2	0.000	0.000
2190	Chevron	07/16/97	withdraw	T-2909-ZA-1	0.000	0.000
2192	Chevron	07/16/97	withdraw	A-1077-ZA-1	0.000	0.000
2158	Chevron	07/16/97	withdraw	C-1232-Z-1	0.000	0.000
2268	Unocal	07/27/99	deposit	516-Z	0.290	0.390
2236	Unocal	07/15/99	withdraw	U-3032-Z-2	-2.968	-0.088
2236	Unocal	01/07/97	deposit	U-3032-Z-3	2.968	0.088
2865	Unocal SMR	09/15/99	withdraw	U-3031-ZL-4	0.000	0.000
2865	Tosco SMR	09/15/99	deposit	589-Z1	0.000	0.000
2866	Unocal SMR	09/15/99	withdraw	U-3031-ZL-2	0.000	0.000
2866	Tosco SMR	09/15/99	deposit	590-T1	0.000	0.000
2943	Chevron, Cars	05/10/00	deposit	670-T1	0.000	0.000
2853	Chevron, Estero	07/06/00	deposit	681-Z1	0.000	0.000
2854	Chevron, Estero	07/06/00	deposit	680-Z1	0.000	0.000
2855	Chevron, Estero	07/06/00	deposit		0.000	1.920

Table CC-2.
San Luis Obispo Air Pollution Control District Emission Reduction Credit Banking Registry Excerpt (April 2012) *(cont.)*

Application Number	Company	Action Date	Action Type	Certificate Number	SOx tons/year Emission Reduction Credits	PM-10 tons/year Emission Reduction Credits
2856	Chevron, Estero	07/06/00	deposit	684-Z1	1.230	0.000
2857	Chevron, Estero	07/06/00	deposit	685-Z1	0.000	0.000
Expired	Unocal SMR	06/29/94	withdraw	590-T1	0.000	0.000
2961	Chevron Shandn	09/22/00	deposit	359-Z2		
2980	Chevron Shandn	09/22/00	deposit	690-Z1	0.040	0.000
2981	Chevron Shandn	09/22/00	deposit	691-Z1	0.000	0.480
2982	Chevron Shandn	09/22/00	deposit	692-Z1	0.000	0.000
2983	Chevron Shandn	09/22/00	deposit	693-Z1	zero	0.000
2894	Dynegy	11/20/00	deposit	694-Z1	194.930	17.220
3053	Union Asphalt	01/20/01	withdraw	U-3022-ZA-2	-2.600	0.000
3068	Stocker Resource	05/20/01	deposit	722-Z1	0.000	0.000
2853	Chevron, Estero	4/17/2002	withdraw	681-Z1	0.000	0.000
2854	Chevron, Estero	4/17/2002	withdraw	680-Z1	0.000	0.000
2855	Chevron, Estero	4/17/2002	withdraw	682-Z1	0.000	-1.920
2856	Chevron, Estero	4/17/2002	withdraw	684-Z1	-1.230	0.000
2857	Chevron, Estero	4/17/2002	withdraw	685-Z1	0.000	0.000
3219	Dynegy	04/17/02	deposit	772-Z1	1.230	1.920
2943	Chevron, Cars	04/27/02	withdraw	Expire April 02	0.000	0.000
3068	Stocker Resource	05/20/01	withdraw	722-Z1	0.000	0.000
3111	Philips 66	05/24/02	deposit	780-Z1	1.440	1.610
	Philips 66	05/24/02	deposit	780-CB		
3430	Plains Exp.	08/05/03	deposit	722-Z2	0.000	0.000
3364	Plains Exp.	02/27/04	withdraw	722-Z2	0.000	0.000
3364	Plains Exp.	02/27/04	deposit	722-Z3	0.000	0.000
3111	ConocoPhillips	05/20/04	withdraw	780-Z1	-1.440	-1.610
3521	ConocoPhillips	05/20/04	deposit	780-Z2	1.210	1.610
3559	ConocoPhillips	07/12/04	withdraw	780-Z2	-1.210	-1.610
3559	ConocoPhillips	07/12/04	deposit	780-Z3	1.210	0.120
4048	ConocoPhillips	07/12/04	withdraw	780-Z3	-1.210	-0.120
4048	ConocoPhillips	12/16/05	deposit	780-Z4	1.210	0.120
4048	ConocoPhillips	12/16/05	withdraw	780-Z4	-1.210	-0.120
4048	ConocoPhillips	05/15/05	deposit	780-Z4	1.210	0.070
3875	ConocoPhillips	06/28/06	withdraw	780-Z4	-1.210	-0.070

Table CC-2.
San Luis Obispo Air Pollution Control District Emission Reduction Credit Banking Registry Excerpt (April 2012) *(cont.)*

Application Number	Company	Action Date	Action Type	Certificate Number	SOx tons/year Emission Reduction Credits	PM-10 tons/year Emission Reduction Credits
3855	ConocoPhillips	06/28/06	deposit	780-Z5	1.110	1.534
3855	ConocoPhillips	10/16/06	withdraw	780-Z5	-1.110	-1.534
4246	ConocoPhillips	10/16/06	deposit	780-Z6	1.206	1.533
4376	CB&I Trusco	10/03/07	deposit	1196-Z1	0.000	0.001
4432	ConocoPhillips	02/05/08	deposit	1319-Z1	299.528	7.567
5179	Lime Mountain	08/11/10	deposit	728-Z1	0.005	0.035
5320	ConocoPhillips	04/12/12	withdraw	780-Z6	-1.206	-1.533
5320	Philips 66	04/12/12	deposit	780-Z7	1.205	1.297
name only	ConocoPhillips	04/12/12	withdraw	1319-Z1	-299.528	-7.567
name only	Philips 66	04/12/12	deposit	1319-Z2	299.528	7.567
name only	Tosco SMR	04/12/12	withdraw	589-Z1	0.000	0.000
name only	Philips 66	04/12/12	deposit	589-Z2	0.000	0.000
					SO2	**PM-10**
				TOTAL	**500.196**	**31.112**

Re: Willey, G., San Luis Obispo Air Pollution Control District (personal communication, April 20, 2012) – attached file, BANKLOG_current_Apr_2012.xlsx

Table CC-3
Environmental Permit/Approval Assessment: Passive Draft Dry/Air Cooling (Saltwater)
Diablo Canyon Power Plant

Permit/Approval	Assessment	Permit Review Period (Preconstruction)	Critical Path	Fatal Flaw
Multiple-Use Class L Limited Land Use Designated Utility Corridor – Bureau of Land Management (BLM) or Other Responsible Federal Agency	Not applicable - the addition of the cooling tower system will not require any additional federal land.	Not applicable	No	No
California Public Utility Commission (CPUC) Approval	CPUC may share the lead agency California CEQA responsibilities for the proposed PDD technology. The CEQA review process trigger development of a comprehensive EIR.	12 months nominally	Potential	Potential
California Energy Commission (CEC) – Final Decision	Not applicable - this process is only applicable if there is a power capacity (increase) > 50 MW, the threshold for review by the CEC. A PDD system will not result in increased power output, so there will be no CEC-sponsored CEQA review or specific permits or approvals.	Not applicable	No	No
Coastal Development Permit - California Coastal Commission/Local Coastal Programs	Applicable for cooling tower development within the coastal zone that includes all of the DCPP property. While there are no initial fatal flaws with the passive air-cooled draft tower system, the elevated position of the tower system could result in visual impacts that become a contention issue.	A 3 to 9 month process is advertised, but longer if CEQA review process (CEQA/EIR) is triggered.	Potential	No
Coastal Development Lease – California State Lands Commission and potential California Environmental Quality Act (CEQA) Lead Agency	The State Land Commission will evaluate the expected impacts to marine environment associated with addition of PDD towers and determine if a Categorical Exemption (unlikely) or Mitigated Negative Declaration applies. These impacts could trigger the Commission to initiate the CEQA/EIR review process.	Dependent of the duration of the CEQA/EIR process (> 1 year).	Potential	No
Regional Pollution Control District Authority to Construct (ATC) – San Luis Obispo Air Pollution Control District	Not applicable - the PDD towers will not generate any additional operational air emissions.	Not applicable	NA	NA

Table CC-3
Environmental Permit/Approval Assessment: Passive Draft Dry/Air Cooling (Saltwater)
Diablo Canyon Power Plant *(cont.)*

Permit/Approval	Assessment	Permit Review Period (Preconstruction)	Critical Path	Fatal Flaw
Regional Control District Permit to Operate (PTO) – San Luis Obispo Air Pollution Control District	Not applicable - the PDD towers will not generate any additional operational air emissions.	Not applicable	NA	NA
Title V Federal Operating Permit –San Luis Obispo Air Pollution Control District and USEPA	Not applicable - the PDD towers will not generate any operational additional air emissions.	Not applicable	No	No
Title IV Acid Rain Permit - USEPA	Not applicable – no major sources of acid rain air pollution.	Not applicable	NA	NA
Dust Control Plan – San Luis Obispo Air Pollution Control District	Construction projects that emit particulate matter must comply with PM-10 standards via a Dust Control Plan.	Plans development: 1 month	No	No
NPDES Industrial Discharge Permit – Central Coast Regional Water Quality Control Board (RWQCB) and State Water Resources Control Board	Changes in the quantity and quality of the cooling system discharge will necessitate a change in the NPDES permit that is based on a once-through system. The water withdrawal and discharge will be significantly decreased, but there will be changes in the water treatment processes (additional biocides and other treatment chemicals). The modification of the current NPDES permit to reflect the PDD system is not expected to generate significant issues.	~6 months	No	No
Notice of Intent (NOI) – National Pollutant Discharge Elimination System General Permit for Storm Water Discharges Associated with Construction Activity, Central Coast Regional Water Quality Control Board (RWQCB)	Land disturbances associated with the PDD towers system will substantially exceed the 1 acre threshold level necessitating the submittal of Notice of Intent (NOI) and development of Storm Water Pollution Prevention Plan.	Electronic submittal – 1 week process	No	No

Table CC-3
Environmental Permit/Approval Assessment: Passive Draft Dry/Air Cooling (Saltwater)
Diablo Canyon Power Plant *(cont.)*

Permit/Approval	Assessment	Permit Review Period (Preconstruction)	Critical Path	Fatal Flaw
Storm Water Pollution Prevention Plan (SWPPP) – National Pollutant Discharge Elimination System General Permit for Storm Water Discharges Associated with Construction Activity – Central Coast Regional Quality Control Board (RWQCB)	Land disturbances associated with the PDD towers will substantially exceed the 1 acre threshold level necessitating the submittal of Notice of Intent (NOI) and development of Storm Water Pollution Prevention Plan.	SWPPP development process (3-months)	No	No
Notice of Intent (NOI) – National Pollutant Discharge Elimination System General Permit for Storm Water Discharges Associated with Industrial Activity, Central Coast Regional Water Quality Control Board (RWQCB)	Not applicable - DCPP NPDES permit addresses operational storm water – there is no operational phase Notice of Intent for this facility.	Not applicable	NA	NA
Storm Water Pollution Prevention Plan (SWPPP) – National Pollutant Discharge Elimination System General Permit for Storm Water Discharges Associated with Industrial Activity, Central Coast Regional Quality Control Board (RWQCB)	Not applicable - DCPP NPDES permit addresses operational storm water – there is no separate operational phase SWPPP.	Not applicable	NA	NA
2081 Permit for California Endangered Species Act of 1984 (Fish & Game Code, §2050 through 2098) – California Department of Fish & Game (CDFG)	Potentially applicable - PDD tower site area will impact undeveloped upland areas that could include grassland and chaparral habitat. There will also be water pipeline crossings of the riparian habitat along Diablo Creek.	Potentially, part of CEQA Review	No	No
Lake and Streambed Alteration Agreement - California Department of Fish & Game (CDFG)	Potentially applicable - if PDD tower site area disturbance involves impacts to jurisdictional streambed areas (waters of the state).	1-2 months, (if application complete) Note recent history indicates this could extend to 4 to 6 months.	No	No
Waste Discharge Requirements (WDR) – Central Coast Regional Water Quality Control Board (RWQCB)	Potentially applicable - if PDD tower site area disturbance involves impacts to jurisdictional streambed (waters of the state)	4-6 months	No	No
Section 106 Review – Office of Historic Preservation (OHP)	Potential for Historical Review – part of CEQA review process.	Integral to CEQA review process.	No	No

Table CC-3
Environmental Permit/Approval Assessment: Passive Draft Dry/Air Cooling (Saltwater)
Diablo Canyon Power Plant *(cont.)*

Permit/Approval	Assessment	Permit Review Period (Preconstruction)	Critical Path	Fatal Flaw
Notification of Waste Activity - RCRA Hazardous Waste Identification Number (Small Quantity Generator) – Construction Phase - Department of Toxic Substance Control, USEPA, San Luis Obispo County Environment Health Services - California Unified Program Agency	Potentially necessary for construction of the PDD towers, unless current DCPP ID will be used.	1-2 weeks	No	No
Notification of Waste Activity - RCRA Hazardous Waste Identification Number (Small Quantity Generator) – Operation - Department of Toxic Substance Control, USEPA, San Luis Obispo County Environmental Health Services - California Unified Program Agency	DCPP likely will continue to be able to continue to use their existing hazardous waste ID number. There will be no impacts to the onsite hazardous treatment facility (oil separation unit).	Not Preconstruction Permit	No	No
SPCC Plan - 40 CFR 112 and Aboveground Petroleum Storage Act – San Luis Obispo Environmental Health Services- California Unified Program Agency and USEPA	DCPP will likely have to modify their existing SPCC plan in response to potential for new aboveground storage tanks of applicable petroleum materials.	1-2 months plan development	No	No
Underground Storage Tank Permit - San Luis Obispo County Environmental Health - California Unified Program Agency and State Water Resources Board	The new PDD towers could force the relocation of underground tanks mandating new permits from the county and revised inspection programs.	1-2 months	No	No
Risk Management Plan (Clean Air Act 112r) – San Luis Obispo County Environmental Health Services - California Unified Program Agency and USEPA	If new volatile chemicals are needed to support PDD tower operation, a Risk Management Plan may be needed to assess the offsite impacts of a release of the subject chemical.	Not a preconstruction requirement.	No	No
Emergency Planning and Community Right-to-Know Act (EPCRA) – 40 CFR 311 & 312 - San Luis Obispo County Environmental Health Services - California Unified Program Agency and USEPA	If new chemicals are stored in quantities that exceed applicable thresholds (for example, 10,000 lbs for hazardous chemicals, 500 lbs for extremely hazardous chemicals), additional notification reports will need to be sent to the county.	Not a preconstruction requirement	No	No

Table CC-3
Environmental Permit/Approval Assessment: Passive Draft Dry/Air Cooling (Saltwater)
Diablo Canyon Power Plant *(cont.)*

Permit/Approval	Assessment	Permit Review Period (Preconstruction)	Critical Path	Fatal Flaw
Land Use Zones/Districts Approval - San Luis Obispo County Department of Planning and Building	The county will likely evaluate consistency of the proposed cooling tower development with the current land use designation. Part of the cooling facility extends beyond the current DCPP boundaries.	Dependent of the duration of the CEQA/EIR process (> 1 year).	Potential	Potential
Condition Use Plan Amendment - San Luis Obispo County Department of Planning and Building	A Conditional Use Plan will be issued based on the findings of the CEQA review process.	Dependent of the duration of the CEQA/EIR process (> 1 year).	Potential	Potential
Grading Plan Approval or Permit - San Luis Obispo County Department of Public Works & Planning and Building	Grading plan permits will be necessary to support construction.	4-6 weeks –following completion of CEQA and conditional use permit	No	No
Erosion and Sediment Control Plan (Rain Event Action Plan) - San Luis Obispo County Department of Public Works	Similar to construction phase SWPPP. No separate submittal is expected to be directed to the county.	See SWPPP discussion	No	No
Building Permit (including plumbing and electrical) – San Obispo County Building Division	Building permits will be necessary to support construction.	4-6 weeks –following completion of CEQA and conditional use permit	No	No
Domestic Water Supply Permit (public potable water) - San Obispo County Department of Environmental Health	Not applicable – no new potable water systems are planned.	Not applicable	NA	NA
San Luis Obispo County Well Water Permit - San Luis Obispo County Environmental Health Services	No new wells to be developed will be developed in support of saltwater cooling towers.	Not applicable – saltwater option.	NA	NA
California Department of Transportation (Caltrans) – Oversize/Overweight Vehicles	Potentially applicable - if some of the tower elements prove to be oversized.	Not a preconstruction requirement.	No	No
Caltrans Heavy Haul Report (transport and delivery of heavy and oversized loads)	Potentially applicable - if some of the tower elements prove to be oversized.	Not a preconstruction requirement.	No	No

Table CC-3
Environmental Permit/Approval Assessment: Passive Draft Dry/Air Cooling (Saltwater)
Diablo Canyon Power Plant *(cont.)*

Permit/Approval	Assessment	Permit Review Period (Preconstruction)	Critical Path	Fatal Flaw
Resource Conservation (RC) Land Use Management Approval	Not applicable - while local municipality rules may supersede this regional land use//watershed protection-related project approval process, this is not the case for DCPP.	1-4 months, if application complete	NA	NA
Temporary Power Pole – Local municipality or San Luis Obispo County Public Works Department	Local power poles may be needed during the course of construction.	Not a Preconstruction Approvals	No	No
Fire Safety Plan Approval, Certificate of Occupancy, Flammable Storage – San Luis Obispo County Fire Department	While the addition of PDD towers may require revisions to the existing Fire Safety Plan, the tower system is not expected to include new occupied structures,	1 month for approval of Fire Safety Plan.	No	No
Sewer and Sewer Connections – San Luis Obispo County Environmental Health Services	Not applicable - no new sanitary connections are envisioned.	Not applicable.	NA	NA
Road Crossing or Encroachment Permit (Caltrans, San Luis Obispo County)	Not applicable – the addition of the tower system is not expected to pose any road crossing or encroachment issues.	Not applicable.	NA	NA

Table CC-4
Environmental Permit/Approval Assessment: Passive Draft Dry/Air Cooling System (Reclaimed and Freshwater)
Diablo Canyon Power Plant

Permit/Approval	Assessment	Permit Review Period (Preconstruction)	Critical Path	Fatal Flaw
National Environmental Policy Act – BLM or Other Responsible Lead Federal Agency (Record of Decision, Right of Way)	Not applicable – if Project does not constitute major federal action (federal land, funding). Please note that if NEPA is triggered it could involve a 12-18 month review period.	Not applicable	NA	NA
Section 404/10 Permit – U.S. Army Corps of Engineers (USACE)	Not applicable – water supply is assumed to be available at the site boundary. There are no impacts to jurisdictional waters.	Not applicable	NA	NA
Section 401 Water Quality Certificate – U.S. Army Corps of Engineers (USACE) & Regional Quality Control Board (RWQCB)	Not applicable – if the water supply is assumed to be available at the site boundary. There are no impacts to jurisdictional waters.	Not applicable	NA	NA
Nationwide Permit – U.S. Army Corps of Engineers	Not applicable – if the water supply is assumed to be available at the site boundary. There are no impacts to jurisdictional waters.	Not applicable	No	No
Section 7 Consultation with U.S. Fish and Wildlife Service (Endangered Species Act of 1973)	The tower construction will impact unoccupied, potentially undeveloped land that could include grassland and chaparral habitat. Pipelines will cross riparian habitat along Diablo Creek.	Potentially part of CEQA Review	No	No
Notice of Proposed Construction or Alteration – Federal Aviation Administration (FAA), Permanent Facilities	Applicable because natural draft towers will be taller than 200 feet above ground level and represent a potential obstruction to local aviation.	1-2 months	No	No
Notice of Proposed Construction or Alteration – FAA, Temporary Construction Facilities	Applicable because temporary structures (for example, cranes) will be taller than 200 feet above ground level and represent a potential obstruction to local aviation.	1-2 months	No	No
Multiple-Use Class L Limited Land Use Designated Utility Corridor – Bureau of Land Management (BLM) or Other Responsible Federal Agency	Not applicable - the addition of the cooling tower system will not require any additional federal land.	Not applicable	No	No

Table CC-4
Environmental Permit/Approval Assessment: Passive Draft Dry/Air Cooling System (Reclaimed and Freshwater)
Diablo Canyon Power Plant *(cont.)*

Permit/Approval	Assessment	Permit Review Period (Preconstruction)	Critical Path	Fatal Flaw
California Public Utility Commission (CPUC) Approval	CPUC may share the lead agency CEQA responsibilities for the proposed PDD technology. The CEQA review process trigger development of a comprehensive EIR.	12 months nominally	Potential	Potential
California Energy Commission (CEC) – Final Decision	Not applicable - this process is only applicable if there is a power capacity (increase) > 50 MW, the threshold for review by the CEC. PDD towers will not result in increased power output, so there will be no CEC-sponsored CEQA review or specific permits or approvals.	Not applicable	NA	NA
Coastal Development Permit - California Coastal Commission/Local Coastal Programs	Applicable for cooling tower development within the coastal zone that includes all of the DCPP property. While there are no initial fatal flaws with the PDD system, the elevated position of the tall tower system could result in visual impacts that are ultimately found unacceptable by the Commission.	A 3 to 9 month process is advertised, but longer if CEQA review process (CEQA/EIR) is triggered.	Potential	Potential
Coastal Development Lease – California State Lands Commission and potential California Environmental Quality Act (CEQA) Lead Agency	The State Land Commission will evaluate the expected impacts to marine environment associated with addition of a PDD system and determine if a Categorical Exemption (unlikely) or Mitigated Negative Declaration applies. These impacts could trigger the Commission to initiate the CEQA/EIR review process.	Dependent of the duration of the CEQA/EIR process (> 1 year).	Potential	No
Regional Pollution Control District Authority to Construct (ATC) – San Luis Obispo Air Pollution Control District	Not applicable - the PDD towers will not generate any additional operational air emissions.	Not applicable	NA	NA
Regional Control District Permit to Operate (PTO) – San Luis Obispo Air Pollution Control District	Not applicable - the PDD towers will not generate any additional operational air emissions.	Not applicable	NA	NA

Table CC-4
Environmental Permit/Approval Assessment: Passive Draft Dry/Air Cooling System (Reclaimed and Freshwater)
Diablo Canyon Power Plant *(cont.)*

Permit/Approval	Assessment	Permit Review Period (Preconstruction)	Critical Path	Fatal Flaw
Title V Federal Operating Permit – San Luis Obispo Air Pollution Control District and USEPA	Not applicable - the PDD towers will not generate any operational additional air emissions.	Not applicable	NA	NA
Title IV Acid Rain Permit - USEPA	Not applicable – no major sources of acid rain air pollution	Not applicable	NA	NA
Dust Control Plan – San Luis Obispo Air Pollution Control District	Construction projects that emit particulate matter must comply with PM-10 standards via a Dust Control Plan.	Plans development: 1 month	No	No
NPDES Industrial Discharge Permit – Central Coast Regional Water Quality Control Board (RWQCB) and State Water Resources Control Board	Changes in the quantity and quality of the cooling system discharge will necessitate a change in the NPDES permit, which is based on a once-through system. The water withdrawal from the ocean will be discontinued and the discharge will be significantly decreased. There will be changes in the water treatment processes (additional biocides and other treatment chemicals). The modification of the current NPDES permit to reflect the PDD system is not expected to generate significant issues.	~6 months	No	No
Notice of Intent (NOI) – National Pollutant Discharge Elimination System General Permit for Storm Water Discharges Associated with Construction Activity, Central Coast Regional Water Quality Control Board (RWQCB)	Land disturbances associated with PDD towers will substantially exceed the 1 acre threshold level necessitating the submittal of Notice of Intent (NOI) and development of Storm Water Pollution Prevention Plan.	Electronic submittal – 1 week process	No	No
Storm Water Pollution Prevention Plan (SWPPP) – National Pollutant Discharge Elimination System General Permit for Storm Water Discharges Associated with Construction Activity –Central Coast Regional Quality Control Board (RWQCB)	Land disturbances associated with PDD towers will substantially exceed the 1 acre threshold level necessitating the submittal of Notice of Intent (NOI) and development of Storm Water Pollution Prevention Plan.	SWPPP development process (3-months)	No	No

Table CC-4
Environmental Permit/Approval Assessment: Passive Draft Dry/Air Cooling System (Reclaimed and Freshwater)
Diablo Canyon Power Plant *(cont.)*

Permit/Approval	Assessment	Permit Review Period (Preconstruction)	Critical Path	Fatal Flaw
Notice of Intent (NOI) – National Pollutant Discharge Elimination System General Permit for Storm Water Discharges Associated with Industrial Activity, Central Coast Regional Water Quality Control Board (RWQCB)	Not applicable - DCPP NPDES permit addresses operational storm water – there is no operational phase Notice of Intent for this facility.	Not applicable	NA	NA
Storm Water Pollution Prevention Plan (SWPPP) – National Pollutant Discharge Elimination System General Permit for Storm Water Discharges Associated with Industrial Activity, Central Coast Regional Quality Control Board (RWQCB)	Not applicable - DCPP NPDES permit addresses operational storm water – there is no separate operational phase SWPPP.	Not applicable	NA	NA
2081 Permit for California Endangered Species Act of 1984 (Fish & Game Code, §2050 through 2098) – California Department of Fish & Game (CDFG)	Potentially applicable - PDD tower site area will impact undeveloped upland areas that could include grassland and chaparral habitat. There will also be water pipeline crossings of the riparian habitat along Diablo Creek.	Potentially, part of CEQA Review	No	No
Lake and Streambed Alteration Agreement - California Department of Fish & Game (CDFG)	Potentially applicable - if PDD tower site area disturbance involves impacts to jurisdictional streambed areas (waters of the state).	1-2 months, (if application complete) Note recent history indicates this could extend to 4 to 6 months.	No	No
Waste Discharge Requirements (WDR) –Central Coast Regional Water Quality Control Board (RWQCB)	Potentially applicable - if PDD tower site area disturbance involves impacts to jurisdictional streambed (waters of the state)	4-6 months	No	No
Section 106 Review – Office of Historic Preservation (OHP)	Potential for Historical Review – part of CEQA review process.	Integral to CEQA review process.	No	No

Table CC-4
Environmental Permit/Approval Assessment: Passive Draft Dry/Air Cooling System (Reclaimed and Freshwater)
Diablo Canyon Power Plant *(cont.)*

Permit/Approval	Assessment	Permit Review Period (Preconstruction)	Critical Path	Fatal Flaw
Notification of Waste Activity - RCRA Hazardous Waste Identification Number (Small Quantity Generator) – Construction Phase - Department of Toxic Substance Control, USEPA, San Luis Obispo County Environment Health Services - California Unified Program Agency	Potentially necessary for construction of the towers, unless current DCPP ID will be used.	1-2 weeks	No	No
Notification of Waste Activity - RCRA Hazardous Waste Identification Number (Small Quantity Generator) – Operation - Department of Toxic Substance Control, USEPA, San Luis Obispo County Environmental Health Services - California Unified Program Agency	DCPP likely will continue to be able to continue to use their existing hazardous waste ID number. There will be no impacts to the onsite hazardous treatment facility (oil separation unit).	Not Preconstruction Permit	No	No
SPCC Plan - 40 CFR 112 and Aboveground Petroleum Storage Act – San Luis Obispo Environmental Health Services- California Unified Program Agency and USEPA	DCPP will likely have to modify their existing SPCC plan in response to potential for new aboveground storage tanks of applicable petroleum materials.	1-2 months plan development	No	No
Underground Storage Tank Permit - San Luis Obispo County Environmental Health - California Unified Program Agency and State Water Resources Board	The new PDD towers could force the relocation of underground tanks mandating new permits from the county and revised inspection programs.	1-2 months	No	No
Risk Management Plan (Clean Air Act 112r) – San Luis Obispo County Environmental Health Services - California Unified Program Agency and USEPA	If new volatile chemicals are needed to support PDD tower operation, a Risk Management Plan may be needed to assess the offsite impacts of a release of the subject chemical.	Not a preconstruction requirement.	No	No
Emergency Planning and Community Right-to-Know Act (EPCRA) – 40 CFR 311 & 312 - San Luis Obispo County Environmental Health Services - California Unified Program Agency and USEPA	If new chemicals are stored in quantities that exceed applicable thresholds (for example, 10,000 lbs for hazardous chemicals, 500 lbs for extremely hazardous chemicals), additional notification reports will need to be sent to the county.	Not a preconstruction requirement	No	No

Table CC-4
Environmental Permit/Approval Assessment: Passive Draft Dry/Air Cooling System (Reclaimed and Freshwater)
Diablo Canyon Power Plant *(cont.)*

Permit/Approval	Assessment	Permit Review Period (Preconstruction)	Critical Path	Fatal Flaw
Land Use Zones/Districts Approval - San Luis Obispo County Department of Planning and Building	The county will likely evaluate consistency of the proposed cooling tower development with the current land use designation. Portions of the passive draft air-cooled system extend beyond the DCPP property boundaries.	Dependent of the duration of the CEQA/EIR process (> 1 year).	Potential	Potential
Condition Use Plan Amendment - San Luis Obispo County Department of Planning and Building	A Conditional Use Plan will be issued based on the findings of the CEQA review process.	Dependent of the duration of the CEQA/EIR process (> 1 year).	Potential	Potential
Grading Plan Approval or Permit - San Luis Obispo County Department of Public Works & Planning and Building	Grading plan permits will be necessary to support construction.	4-6 weeks –following completion of CEQA and conditional use permit	No	No
Erosion and Sediment Control Plan (Rain Event Action Plan) - San Luis Obispo County Department of Public Works	Similar to construction phase SWPPP. No separate submittal is expected to be directed to the county.	See SWPPP discussion	No	No
Building Permit (including plumbing and electrical) – San Obispo County Building Division	Building permits will be necessary to support construction.	4-6 weeks –following completion of CEQA and conditional use permit	No	No
Domestic Water Supply Permit (public potable water) - San Obispo County Department of Environmental Health	Not applicable – no new potable water systems are planned. The delivery of offsite freshwater to the site is not addressed by this permit.	Not applicable	NA	NA
San Luis Obispo County Well Water Permit - San Luis Obispo County Environmental Health Services	The freshwater supply option could demand the addition of onsite wells.	1 -2 weeks (freshwater supply option)	No	No
California Department of Transportation (Caltrans) – Oversize/Overweight Vehicles	Potentially applicable - if some of the tower elements prove to be oversized.	Not a preconstruction requirement.	No	No
Caltrans Heavy Haul Report (transport and delivery of heavy and oversized loads)	Potentially applicable - if some of the tower elements prove to be oversized.	Not a preconstruction requirement.	No	No

Table CC-4
Environmental Permit/Approval Assessment: Passive Draft Dry/Air Cooling System (Reclaimed and Freshwater)
Diablo Canyon Power Plant *(cont.)*

Permit/Approval	Assessment	Permit Review Period (Preconstruction)	Critical Path	Fatal Flaw
Resource Conservation (RC) Land Use Management Approval	While local municipality rules may supersede this regional land use//watershed protection-related project approval process, this is not the case for DCPP.	1-4 months, if application complete	NA	NA
Temporary Power Pole – Local municipality or San Luis Obispo County Public Works Department	Local power poles may be needed during the course of construction.	Not Preconstruction Approvals	No	No
Fire Safety Plan Approval, Certificate of Occupancy, Flammable Storage – San Luis Obispo County Fire Department	While the addition of PDD towers may require revisions to the existing Fire Safety Plan, the tower system is not expected to include new occupied structures,	1 month for approval of Fire Safety Plan.	No	No
Sewer and Sewer Connections – San Luis Obispo County Environmental Health Services	Not applicable - no new sanitary connections are envisioned.	Not applicable.	NA	NA
Road Crossing or Encroachment Permit (Caltrans, San Luis Obispo County)	The freshwater and reclaimed water pipeline routes have not been determined. Encroachment permits and related engineering studies remain a possibility.	1-3 months.	No	No

Table CC-5
Environmental Permit/Approval Assessment: Mechanical (Forced) Draft Dry/Air Cooling (Saltwater)
Diablo Canyon Power Plant

Permit/Approval	Assessment	Permit Review Period (Preconstruction)	Critical Path	Fatal Flaw
National Environmental Policy Act – BLM or Other Responsible Lead Federal Agency (Record of Decision, Right of Way)	Not applicable – if Project does not constitute major federal action (federal land, funding). Please note that if NEPA is triggered it could involve a 12-18 month review period.	NA	NA	NA
Section 404/10 Permit – U.S. Army Corps of Engineers (USACE)	Refashioning of the existing intake system for closed-cycle cooling may generate significant impacts to waters of the U.S. and will involve work in navigable waters. Work associated with crossings of Diablo Creek could also represent significant impacts. An individual form of permit will be required	120 days from complete application (goal) ~12 months (expected)	Potential	No
Section 401 Water Quality Certificate – U.S. Army Corps of Engineers (USACE) & Regional Quality Control Board (RWQCB)	Section 401 permit process will parallel Section 404 permit process.	~12 months (expected)	No	No
Nationwide Permit – U.S. Army Corps of Engineers	Not applicable - the refashioning of the existing intake system for closed-cycle cooling may generate significant impacts to waters of the S that cannot be addressed by the Nationwide permitting process.	Not applicable	No	No
Section 7 Consultation with U.S. Fish and Wildlife Service (Endangered Species Act of 1973)	The tower construction will impact unoccupied, potentially undeveloped land that could include grassland and chaparral habitat. Pipelines will cross riparian habitat along Diablo Creek.	Potentially part of CEQA Review	No	No
Notice of Proposed Construction or Alteration – Federal Aviation Administration (FAA), Permanent Facilities	Not applicable – MDD towers will be less than 200 feet above ground level threshold for FAA review.	Not applicable	NA	NA
Notice of Proposed Construction or Alteration – FAA, Temporary Construction Facilities	Not applicable – MDD towers will be less than 200 feet above ground level threshold for FAA review.	Not applicable	NA	NA
Multiple-Use Class L Limited Land Use Designated Utility Corridor – Bureau of Land Management (BLM) or Other Responsible Federal Agency	Not applicable - the addition of the MDD tower system will not require any additional federal land.	Not applicable	No	No

Table CC-5
Environmental Permit/Approval Assessment: Mechanical (Forced) Draft Dry/Air Cooling (Saltwater)
Diablo Canyon Power Plant *(cont.)*

Permit/Approval	Assessment	Permit Review Period (Preconstruction)	Critical Path	Fatal Flaw
California Public Utility Commission (CPUC) Approval	CPUC may share the lead agency California Environmental Policy Act (CEQA) responsibilities for the proposed MDD technology. The CEQA review process trigger development of a comprehensive EIR.	12 months nominally	Potential	Potential
California Energy Commission (CEC) – Final Decision	Not applicable - this process is only applicable if there is a power capacity (increase) > 50 MW, the threshold for review by the CEC. An MDD system will not result in increased power output, so there will be no CEC-sponsored CEQA review or specific permits or approvals.	Not applicable	No	No
Coastal Development Permit - California Coastal Commission/Local Coastal Programs	Applicable for cooling tower development within the coastal zone that includes all of the DCPP property. While there are no initial fatal flaws with the MDD system, the elevated position of the tower system could result in visual impacts that become a contention issue.	A 3 to 9 month process is advertised, but longer if CEQA review process (CEQA/EIR) is triggered.	Potential	No
Coastal Development Lease – California State Lands Commission and potential California Environmental Quality Act (CEQA) Lead Agency	The State Land Commission will evaluate the expected impacts to marine environment associated with addition of an MDD cooling tower system and determine if a Categorical Exemption (unlikely) or Mitigated Negative Declaration applies. These impacts could trigger the Commission to initiate the CEQA/EIR review process.	Dependent of the duration of the CEQA/EIR process (> 1 year).	Potential	No
Regional Pollution Control District Authority to Construct (ATC) – San Luis Obispo Air Pollution Control District	Not applicable - the MDD tower system will not generate any additional operational air emissions.	Not applicable	NA	NA
Regional Control District Permit to Operate (PTO) – San Luis Obispo Air Pollution Control District	Not applicable - the MDD tower system will not generate any additional operational air emissions.	Not applicable	NA	NA

Table CC-5
Environmental Permit/Approval Assessment: Mechanical (Forced) Draft Dry/Air Cooling (Saltwater)
Diablo Canyon Power Plant *(cont.)*

Permit/Approval	Assessment	Permit Review Period (Preconstruction)	Critical Path	Fatal Flaw
Title V Federal Operating Permit –San Luis Obispo Air Pollution Control District and USEPA	Not applicable - the MDD tower system will not generate any operational additional air emissions.	Not applicable	No	No
Title IV Acid Rain Permit - USEPA	Not applicable – no major sources of acid rain air pollution.	Not applicable	NA	NA
Dust Control Plan – San Luis Obispo Air Pollution Control District	Construction projects that emit particulate matter must comply with PM-10 standards via a Dust Control Plan.	Plans development: 1 month	No	No
NPDES Industrial Discharge Permit – Central Coast Regional Water Quality Control Board (RWQCB) and State Water Resources Control Board	Changes in the quantity and quality of the cooling system discharge will necessitate a change in the NPDES permit that is based on a once-through system. The water withdrawal and discharge will be significantly decreased, but there will be changes in the water treatment processes (additional biocides and other treatment chemicals). The modification of the current NPDES permit to reflect the MDD tower system is not expected to generate significant issues.	~6 months	No	No
Notice of Intent (NOI) – National Pollutant Discharge Elimination System General Permit for Storm Water Discharges Associated with Construction Activity, Central Coast Regional Water Quality Control Board (RWQCB)	Land disturbances associated with the MDD tower system will substantially exceed the 1 acre threshold level necessitating the submittal of Notice of Intent (NOI) and development of Storm Water Pollution Prevention Plan.	Electronic submittal – 1 week process	No	No
Storm Water Pollution Prevention Plan (SWPPP) – National Pollutant Discharge Elimination System General Permit for Storm Water Discharges Associated with Construction Activity – Central Coast Regional Quality Control Board (RWQCB)	Land disturbances associated with the MDD tower system will substantially exceed the 1 acre threshold level necessitating the submittal of Notice of Intent (NOI) and development of Storm Water Pollution Prevention Plan.	SWPPP development process (3-months)	No	No

Table CC-5
Environmental Permit/Approval Assessment: Mechanical (Forced) Draft Dry/Air Cooling (Saltwater)
Diablo Canyon Power Plant *(cont.)*

Permit/Approval	Assessment	Permit Review Period (Preconstruction)	Critical Path	Fatal Flaw
Notice of Intent (NOI) – National Pollutant Discharge Elimination System General Permit for Storm Water Discharges Associated with Industrial Activity, Central Coast Regional Water Quality Control Board (RWQCB)	Not applicable - DCPP NPDES permit addresses operational storm water – there is no operational phase Notice of Intent for this facility.	Not applicable	NA	NA
Storm Water Pollution Prevention Plan (SWPPP) – National Pollutant Discharge Elimination System General Permit for Storm Water Discharges Associated with Industrial Activity, Central Coast Regional Quality Control Board (RWQCB)	Not applicable - DCPP NPDES permit addresses operational storm water – there is no separate operational phase SWPPP.	Not applicable	NA	NA
2081 Permit for California Endangered Species Act of 1984 (Fish & Game Code, §2050 through 2098) – California Department of Fish & Game (CDFG)	Potentially applicable - cooling tower site area will impact undeveloped upland areas that could include grassland and chaparral habitat. There will also be water pipeline crossings of the riparian habitat along Diablo Creek.	Potentially, part of CEQA Review	No	No
Lake and Streambed Alteration Agreement - California Department of Fish & Game (CDFG)	Potentially applicable - if cooling tower site area disturbance involves impacts to jurisdictional streambed areas (waters of the state).	1-2 months, (if application complete) Note recent history indicates this could extend to 4 to 6 months.	No	No
Waste Discharge Requirements (WDR) – Central Coast Regional Water Quality Control Board (RWQCB)	Potentially applicable - if cooling tower site area disturbance involves impacts to jurisdictional streambed (waters of the state)	4-6 months	No	No
Section 106 Review – Office of Historic Preservation (OHP)	Potential for Historical Review – part of CEQA review process.	Integral to CEQA review process.	No	No

Table CC-5
Environmental Permit/Approval Assessment: Mechanical (Forced) Draft Dry/Air Cooling (Saltwater)
Diablo Canyon Power Plant *(cont.)*

Permit/Approval	Assessment	Permit Review Period (Preconstruction)	Critical Path	Fatal Flaw
Notification of Waste Activity - RCRA Hazardous Waste Identification Number (Small Quantity Generator) – Construction Phase - Department of Toxic Substance Control, USEPA, San Luis Obispo County Environment Health Services - California Unified Program Agency	Potentially necessary for construction of the towers, unless current DCPP ID will be used.	1-2 weeks	No	No
Notification of Waste Activity - RCRA Hazardous Waste Identification Number (Small Quantity Generator) – Operation - Department of Toxic Substance Control, USEPA, San Luis Obispo County Environmental Health Services - California Unified Program Agency	DCPP likely will continue to be able to continue to use their existing hazardous waste ID number. There will be no impacts to the onsite hazardous treatment facility (oil separation unit).	Not Preconstruction Permit	No	No
SPCC Plan - 40 CFR 112 and Aboveground Petroleum Storage Act – San Luis Obispo Environmental Health Services- California Unified Program Agency and USEPA	DCPP will likely have to modify their existing SPCC plan in response to potential for new aboveground storage tanks of applicable petroleum materials.	1-2 months plan development	No	No
Underground Storage Tank Permit - San Luis Obispo County Environmental Health - California Unified Program Agency and State Water Resources Board	The new cooling towers could force the relocation of underground tanks mandating new permits from the county and revised inspection programs.	1-2 months	No	No
Risk Management Plan (Clean Air Act 112r) – San Luis Obispo County Environmental Health Services - California Unified Program Agency and USEPA	If new volatile chemicals are needed to support MDD cooling tower operation, a Risk Management Plan may be needed to assess the offsite impacts of a release of the subject chemical.	Not a preconstruction requirement.	No	No
Emergency Planning and Community Right-to-Know Act (EPCRA) – 40 CFR 311 & 312 - San Luis Obispo County Environmental Health Services - California Unified Program Agency and USEPA	If new chemicals are stored in quantities that exceed applicable thresholds (for example, 10,000 lbs for hazardous chemicals, 500 lbs for extremely hazardous chemicals), additional notification reports will need to be sent to the county.	Not a preconstruction requirement	No	No

Table CC-5
Environmental Permit/Approval Assessment: Mechanical (Forced) Draft Dry/Air Cooling (Saltwater)
Diablo Canyon Power Plant *(cont.)*

Permit/Approval	Assessment	Permit Review Period (Preconstruction)	Critical Path	Fatal Flaw
Land Use Zones/Districts Approval - San Luis Obispo County Department of Planning and Building	The county will likely evaluate consistency of the proposed cooling tower development with the current land use designation. Part of the cooling facility extends beyond the current DCPP boundaries.	Dependent of the duration of the CEQA/EIR process (> 1 year).	Potential	Potential
Condition Use Plan Amendment - San Luis Obispo County Department of Planning and Building	A Conditional Use Plan will be issued based on the findings of the CEQA review process.	Dependent of the duration of the CEQA/EIR process (> 1 year).	Potential	Potential
Grading Plan Approval or Permit - San Luis Obispo County Department of Public Works & Planning and Building	Grading plan permits will be necessary to support construction.	4-6 weeks –following completion of CEQA and conditional use permit	No	No
Erosion and Sediment Control Plan (Rain Event Action Plan) - San Luis Obispo County Department of Public Works	Similar to construction phase SWPPP. No separate submittal is expected to be directed to the county.	See SWPPP discussion	No	No
Building Permit (including plumbing and electrical) – San Obispo County Building Division	Building permits will be necessary to support construction.	4-6 weeks –following completion of CEQA and conditional use permit	No	No
Domestic Water Supply Permit (public potable water) - San Obispo County Department of Environmental Health	Not applicable – no new potable water systems are planned.	Not applicable	NA	NA
San Luis Obispo County Well Water Permit - San Luis Obispo County Environmental Health Services	No new wells to be developed will be developed in support of saltwater cooling towers.	Not applicable – saltwater option.	NA	NA
California Department of Transportation (Caltrans) – Oversize/Overweight Vehicles	Potentially applicable - if some of the tower elements prove to be oversized.	Not a preconstruction requirement.	No	No
Caltrans Heavy Haul Report (transport and delivery of heavy and oversized loads)	Potentially applicable - if some of the tower elements prove to be oversized.	Not a preconstruction requirement.	No	No

Table CC-5
Environmental Permit/Approval Assessment: Mechanical (Forced) Draft Dry/Air Cooling (Saltwater)
Diablo Canyon Power Plant *(cont.)*

Permit/Approval	Assessment	Permit Review Period (Preconstruction)	Critical Path	Fatal Flaw
Resource Conservation (RC) Land Use Management Approval	Not applicable - while local municipality rules may supersede this regional land use//watershed protection-related project approval process, this is not the case for DCPP.	1-4 months, if application complete	NA	NA
Temporary Power Pole – Local municipality or San Luis Obispo County Public Works Department	Local power poles may be needed during the course of construction.	Not a Preconstruction Approvals	No	No
Fire Safety Plan Approval, Certificate of Occupancy, Flammable Storage – San Luis Obispo County Fire Department	While the addition of MDD towers may require revisions to the existing Fire Safety Plan, the tower system is not expected to include new occupied structures,	1 month for approval of Fire Safety Plan.	No	No
Sewer and Sewer Connections – San Luis Obispo County Environmental Health Services	Not applicable - no new sanitary connections are envisioned.	Not applicable.	NA	NA
Road Crossing or Encroachment Permit (Caltrans, San Luis Obispo County)	Not applicable – the addition of the tower system is not expected to pose any road crossing or encroachment issues.	Not applicable.	NA	NA

Table CC-6
Environmental Permit/Approval Assessment: Mechanical (Forced) Draft Dry/Air Cooling (Reclaimed and Freshwater)
Diablo Canyon Power Plant

Permit/Approval	Assessment	Permit Review Period (Preconstruction)	Critical Path	Fatal Flaw
National Environmental Policy Act – BLM or Other Responsible Lead Federal Agency (Record of Decision, Right of Way)	Not applicable – if Project does not constitute major federal action (federal land, funding). Please note that if NEPA is triggered it could involve a 12-18 month review period.	Not applicable	NA	NA
Section 404/10 Permit – U.S. Army Corps of Engineers (USACE)	Not applicable – water supply is assumed to be available at the site boundary. There are no impacts to jurisdictional waters.	Not applicable	NA	NA
Section 401 Water Quality Certificate – U.S. Army Corps of Engineers (USACE) & Regional Quality Control Board (RWQCB)	Not applicable – if the water supply is assumed to be available at the site boundary. There are no impacts to jurisdictional waters.	Not applicable	NA	NA
Nationwide Permit – U.S. Army Corps of Engineers	Not applicable – if the water supply is assumed to be available at the site boundary. There are no impacts to jurisdictional waters.	Not applicable	No	No
Section 7 Consultation with U.S. Fish and Wildlife Service (Endangered Species Act of 1973)	Not applicable - if eventual cooling tower site area is within a developed or disturbed area.	Potentially part of CEQA Review	No	No
Notice of Proposed Construction or Alteration – Federal Aviation Administration (FAA), Permanent Facilities	Not applicable – MDD towers will be less than 200 feet above ground level threshold for FAA review.	Not applicable	NA	NA
Notice of Proposed Construction or Alteration – FAA, Temporary Construction Facilities	Not applicable – MDD towers will be less than 200 feet above ground level threshold for FAA review.	Not applicable	NA	NA
Multiple-Use Class L Limited Land Use Designated Utility Corridor – Bureau of Land Management (BLM) or Other Responsible Federal Agency	Not applicable - the addition of the cooling tower system will not require any additional federal land.	Not applicable	No	No
California Public Utility Commission (CPUC) Approval	CPUC may share the lead agency CEQA responsibilities for the proposed mechanical air-cooled draft cooling tower technology. The CEQA review process trigger development of a comprehensive EIR.	12 months nominally	Potential	Potential

Table CC-6
Environmental Permit/Approval Assessment: Mechanical (Forced) Draft Dry/Air Cooling (Reclaimed and Freshwater)
Diablo Canyon Power Plant *(cont.)*

Permit/Approval	Assessment	Permit Review Period (Preconstruction)	Critical Path	Fatal Flaw
California Energy Commission (CEC) – Final Decision	Not applicable - this process is only applicable if there is a power capacity (increase) > 50 MW, the threshold for review by the CEC. An MDD tower system will not result in increased power output, so there will be no CEC-sponsored CEQA review or specific permits or approvals.	Not applicable	NA	NA
Coastal Development Permit - California Coastal Commission/Local Coastal Programs	Applicable for cooling tower development within the coastal zone that includes all of the DCPP property. While there are no initial fatal flaws with the mechanical air-cooled draft tower system, the elevated position of the tower system could result in visual impacts that are ultimately found unacceptable by the Commission.	A 3 to 9 month process is advertised, but longer if CEQA review process (CEQA/EIR) is triggered.	Potential	Potential
Coastal Development Lease – California State Lands Commission and potential California Environmental Quality Act (CEQA) Lead Agency	The State Land Commission will evaluate the expected impacts to marine environment associated with addition of mechanical air-cooled draft cooling tower system and determine if a Categorical Exemption (unlikely) or Mitigated Negative Declaration applies. These impacts could trigger the Commission to initiate the CEQA/EIR review process.	Dependent of the duration of the CEQA/EIR process (> 1 year).	Potential	No
Regional Pollution Control District Authority to Construct (ATC) – San Luis Obispo Air Pollution Control District	Not applicable - the mechanical draft air-cooled towers system will not generate any additional operational air emissions.	Not applicable	NA	NA
Regional Control District Permit to Operate (PTO) – San Luis Obispo Air Pollution Control District	Not applicable - the MDD system will not generate any additional operational air emissions.	Not applicable	NA	NA
Title V Federal Operating Permit – San Luis Obispo Air Pollution Control District and USEPA	Not applicable - the MDD system will not generate any operational additional air emissions.	Not applicable	NA	NA

Table CC-6
Environmental Permit/Approval Assessment: Mechanical (Forced) Draft Dry/Air Cooling (Reclaimed and Freshwater)
Diablo Canyon Power Plant *(cont.)*

Permit/Approval	Assessment	Permit Review Period (Preconstruction)	Critical Path	Fatal Flaw
Title IV Acid Rain Permit - USEPA	Not applicable – no major sources of acid rain air pollution	Not applicable	NA	NA
Dust Control Plan – San Luis Obispo Air Pollution Control District	Construction projects that emit particulate matter must comply with PM-10 standards via a Dust Control Plan.	Plans development: 1 month	No	No
NPDES Industrial Discharge Permit – Central Coast Regional Water Quality Control Board (RWQCB) and State Water Resources Control Board	Changes in the quantity and quality of the cooling system discharge will necessitate a change in the NPDES permit, which is based on a once-through system. The water withdrawal from the ocean will be discontinued and the discharge will be significantly decreased. There will be changes in the water treatment processes (additional biocides and other treatment chemicals). The modification of the current NPDES permit to reflect the MDD system is not expected to generate significant issues.	~6 months	No	No
Notice of Intent (NOI) – National Pollutant Discharge Elimination System General Permit for Storm Water Discharges Associated with Construction Activity, Central Coast Regional Water Quality Control Board (RWQCB)	Land disturbances associated with the MDD system will substantially exceed the 1 acre threshold level necessitating the submittal of Notice of Intent (NOI) and development of Storm Water Pollution Prevention Plan.	Electronic submittal – 1 week process	No	No
Storm Water Pollution Prevention Plan (SWPPP) – National Pollutant Discharge Elimination System General Permit for Storm Water Discharges Associated with Construction Activity –Central Coast Regional Quality Control Board (RWQCB)	Land disturbances associated with the MDD system will substantially exceed the 1 acre threshold level necessitating the submittal of Notice of Intent (NOI) and development of Storm Water Pollution Prevention Plan.	SWPPP development process (3-months)	No	No
Notice of Intent (NOI) – National Pollutant Discharge Elimination System General Permit for Storm Water Discharges Associated with Industrial Activity, Central Coast Regional Water Quality Control Board (RWQCB)	Not applicable - DCPP NPDES permit addresses operational storm water – there is no operational phase Notice of Intent for this facility.	Not applicable	NA	NA

Table CC-6
Environmental Permit/Approval Assessment: Mechanical (Forced) Draft Dry/Air Cooling (Reclaimed and Freshwater)
Diablo Canyon Power Plant *(cont.)*

Permit/Approval	Assessment	Permit Review Period (Preconstruction)	Critical Path	Fatal Flaw
Storm Water Pollution Prevention Plan (SWPPP) – National Pollutant Discharge Elimination System General Permit for Storm Water Discharges Associated with Industrial Activity, Central Coast Regional Quality Control Board (RWQCB)	Not applicable - DCPP NPDES permit addresses operational storm water – there is no separate operational phase SWPPP.	Not applicable	NA	NA
2081 Permit for California Endangered Species Act of 1984 (Fish & Game Code, §2050 through 2098) – California Department of Fish & Game (CDFG)	Potentially applicable - cooling tower site area will impact undeveloped upland areas that could include grassland and chaparral habitat. There will also be water pipeline crossings of the riparian habitat along Diablo Creek.	Potentially, part of CEQA Review	No	No
Lake and Streambed Alteration Agreement - California Department of Fish & Game (CDFG)	Potentially applicable - if cooling tower site area disturbance involves impacts to jurisdictional streambed areas (waters of the state).	1-2 months, (if application complete) Note recent history indicates this could extend to 4 to 6 months.	No	No
Waste Discharge Requirements (WDR) –Central Coast Regional Water Quality Control Board (RWQCB)	Potentially applicable - if cooling tower site area disturbance involves impacts to jurisdictional streambed (waters of the state)	4-6 months	No	No
Section 106 Review – Office of Historic Preservation (OHP)	Potential for Historical Review – part of CEQA review process.	Integral to CEQA review process.	No	No
Notification of Waste Activity - RCRA Hazardous Waste Identification Number (Small Quantity Generator) – Construction Phase - Department of Toxic Substance Control, USEPA, San Luis Obispo County Environment Health Services - California Unified Program Agency	Potentially necessary for construction of the towers, unless current DCPP ID will be used.	1-2 weeks	No	No

Table CC-6
Environmental Permit/Approval Assessment: Mechanical (Forced) Draft Dry/Air Cooling (Reclaimed and Freshwater)
Diablo Canyon Power Plant *(cont.)*

Permit/Approval	Assessment	Permit Review Period (Preconstruction)	Critical Path	Fatal Flaw
Notification of Waste Activity - RCRA Hazardous Waste Identification Number (Small Quantity Generator) – Operation - Department of Toxic Substance Control, USEPA, San Luis Obispo County Environmental Health Services - California Unified Program Agency	DCPP likely will continue to be able to continue to use their existing hazardous waste ID number. There will be no impacts to the onsite hazardous treatment facility (oil separation unit).	Not Preconstruction Permit	No	No
SPCC Plan - 40 CFR 112 and Aboveground Petroleum Storage Act – San Luis Obispo Environmental Health Services- California Unified Program Agency and USEPA	DCPP will likely have to modify their existing SPCC plan in response to potential for new aboveground storage tanks of applicable petroleum materials.	1-2 months plan development	No	No
Underground Storage Tank Permit - San Luis Obispo County Environmental Health - California Unified Program Agency and State Water Resources Board	The new cooling towers could force the relocation of underground tanks mandating new permits from the county and revised inspection programs.	1-2 months	No	No
Risk Management Plan (Clean Air Act 112r) – San Luis Obispo County Environmental Health Services - California Unified Program Agency and USEPA	If new volatile chemicals are needed to support mechanical air-cooled draft cooling tower operation, a Risk Management Plan may be needed to assess the offsite impacts of a release of the subject chemical.	Not a preconstruction requirement.	No	No
Emergency Planning and Community Right-to-Know Act (EPCRA) – 40 CFR 311 & 312 - San Luis Obispo County Environmental Health Services - California Unified Program Agency and USEPA	If new chemicals are stored in quantities that exceed applicable thresholds (for example, 10,000 lbs for hazardous chemicals, 500 lbs for extremely hazardous chemicals), additional notification reports will need to be sent to the county.	Not a preconstruction requirement	No	No
Land Use Zones/Districts Approval - San Luis Obispo County Department of Planning and Building	The county will likely evaluate consistency of the proposed cooling tower development with the current land use designation. Portions of the mechanical draft air-cooled system extend beyond the DCPP property boundaries.	Dependent of the duration of the CEQA/EIR process (> 1 year).	Potential	Potential
Condition Use Plan Amendment - San Luis Obispo County Department of Planning and Building	A Conditional Use Plan will be issued based on the findings of the CEQA review process.	Dependent of the duration of the CEQA/EIR process (> 1 year).	Potential	Potential

Table CC-6
Environmental Permit/Approval Assessment: Mechanical (Forced) Draft Dry/Air Cooling (Reclaimed and Freshwater)
Diablo Canyon Power Plant *(cont.)*

Permit/Approval	Assessment	Permit Review Period (Preconstruction)	Critical Path	Fatal Flaw
Grading Plan Approval or Permit - San Luis Obispo County Department of Public Works & Planning and Building	Grading plan permits will be necessary to support construction.	4-6 weeks –following completion of CEQA and conditional use permit	No	No
Erosion and Sediment Control Plan (Rain Event Action Plan) - San Luis Obispo County Department of Public Works	Similar to construction phase SWPPP. No separate submittal is expected to be directed to the county.	See SWPPP discussion	No	No
Building Permit (including plumbing and electrical) – San Obispo County Building Division	Building permits will be necessary to support construction.	4-6 weeks –following completion of CEQA and conditional use permit	No	No
Domestic Water Supply Permit (public potable water) - San Obispo County Department of Environmental Health	Not applicable – no new potable water systems are planned. The delivery of offsite freshwater to the site is not addressed by this permit.	Not applicable	NA	NA
San Luis Obispo County Well Water Permit - San Luis Obispo County Environmental Health Services	The freshwater supply option could demand the addition of onsite wells.	1 -2 weeks (freshwater supply option)	No	No
California Department of Transportation (Caltrans) – Oversize/Overweight Vehicles	Potentially applicable - if some of the tower elements prove to be oversized.	Not a preconstruction requirement.	No	No
Caltrans Heavy Haul Report (transport and delivery of heavy and oversized loads)	Potentially applicable - if some of the tower elements prove to be oversized.	Not a preconstruction requirement.	No	No
Resource Conservation (RC) Land Use Management Approval	While local municipality rules may supersede this regional land use//watershed protection-related project approval process, this is not the case for DCPP.	1-4 months, if application complete	NA	NA
Temporary Power Pole – Local municipality or San Luis Obispo County Public Works Department	Local power poles may be needed during the course of construction.	Not Preconstruction Approvals	No	No
Fire Safety Plan Approval, Certificate of Occupancy, Flammable Storage – San Luis Obispo County Fire Department	While the addition of MDD towers may require revisions to the existing Fire Safety Plan, the tower system is not expected to include new occupied structures,	1 month for approval of Fire Safety Plan.	No	No
Sewer and Sewer Connections – San Luis Obispo County Environmental Health Services	Not applicable - no new sanitary connections are envisioned.	Not applicable.	NA	NA

Table CC-6
Environmental Permit/Approval Assessment: Mechanical (Forced) Draft Dry/Air Cooling (Reclaimed and Freshwater)
Diablo Canyon Power Plant *(cont.)*

Permit/Approval	Assessment	Permit Review Period (Preconstruction)	Critical Path	Fatal Flaw
Road Crossing or Encroachment Permit (Caltrans, San Luis Obispo County)	The freshwater and reclaimed water pipeline routes have not been determined. Encroachment permits and related engineering studies remain a possibility.	1-3 months.	No	No

Table CC-7
Environmental Permit/Approval Assessment: Wet Natural Draft Cooling Towers (Saltwater)
Diablo Canyon Power Plant

Permit/Approval	Assessment	Permit Review Period (Preconstruction)	Critical Path	Fatal Flaw
National Environmental Policy Act – BLM or Other Responsible Lead Federal Agency (Record of Decision, Right of Way)	Not applicable – if Project does not constitute major federal action (federal land, funding). Please note that if NEPA is triggered it could involve a 12-18 month review period.	NA	NA	NA
Section 404/10 Permit – U.S. Army Corps of Engineers (USACE)	Refashioning of the existing intake system for closed-cycle cooling is likely to generate significant impacts to waters of the U.S. and will involve work in navigable waters. Work associated with crossings of Diablo Creek could also represent significant impacts. Individual form of permit will be required	120 days from complete application (goal) ~12 months (expected)	Potential	No
Section 401 Water Quality Certificate – U.S. Army Corps of Engineers (USACE) & Regional Quality Control Board (RWQCB)	Section 401 permit process will parallel Section 404 permit process.	~12 months (expected)	No	No
Nationwide Permit – U.S. Army Corps of Engineers	Not applicable - the refashioning of the existing intake system for closed-cycle cooling will generate significant impacts to waters of the U.S. that cannot be addressed by the Nationwide permitting process.	Not applicable	No	No
Section 7 Consultation with U.S. Fish and Wildlife Service (Endangered Species Act of 1973)	The tower construction will impact unoccupied, potentially undeveloped land that could include grassland and chaparral habitat. Pipelines will cross riparian habitat along Diablo Creek.	Potentially part of CEQA Review	No	No
Notice of Proposed Construction or Alteration – Federal Aviation Administration (FAA), Permanent Facilities	Applicable because NDW towers will be taller than 200 feet agl and represent a potential obstruction to local aviation.	1-2 months	No	No

Table CC-7
Environmental Permit/Approval Assessment: Wet Natural Draft Cooling Towers (Saltwater)
Diablo Canyon Power Plant *(cont.)*

Permit/Approval	Assessment	Permit Review Period (Preconstruction)	Critical Path	Fatal Flaw
Notice of Proposed Construction or Alteration – FAA, Temporary Construction Facilities	Applicable because temporary structures (for example, cranes) will be taller than 200 feet agl and represent a potential obstruction to local aviation.	1-2 months	No	No
Multiple-Use Class L Limited Land Use Designated Utility Corridor – Bureau of Land Management (BLM) or Other Responsible Federal Agency	Not applicable - the addition of the cooling tower system will not require any additional federal land.	Not applicable	No	No
California Public Utility Commission (CPUC) Approval	CPUC may share the lead agency CEQA responsibilities for the proposed NDW tower technology. The CEQA review process trigger development of a comprehensive EIR.	12 months nominally	Potential	Potential
California Energy Commission (CEC) – Final Decision	Not applicable - this process is only applicable if there is a power capacity (increase) > 50 MW, the threshold for review by the CEC. An NDW system will not result in increased power output, so there will be no CEC-sponsored CEQA review or specific permits or approvals.	Not applicable	No	No
Coastal Development Permit - California Coastal Commission/Local Coastal Programs	Applicable for cooling tower development within the coastal zone that includes all of the DCPP property. While there are no initial fatal flaws with the NDW tower system, the extreme height of the tower system and unabated plume could result in visual impacts that are ultimately found unacceptable by the Commission.	A 3 to 9 month process is advertised, but longer if CEQA review process (CEQA/EIR) is triggered.	Potential	Potential
Coastal Development Lease – California State Lands Commission and potential California Environmental Quality Act (CEQA) Lead Agency	The State Land Commission will evaluate the expected impacts to marine environment associated with addition of NDW cooling tower system and determine if a Categorical Exemption (unlikely) or Mitigated Negative Declaration applies. These impacts could trigger the Commission to initiate the CEQA/EIR review process.	Dependent of the duration of the CEQA/EIR process (> 1 year).	Potential	No

Table CC-7
Environmental Permit/Approval Assessment: Wet Natural Draft Cooling Towers (Saltwater)
Diablo Canyon Power Plant *(cont.)*

Permit/Approval	Assessment	Permit Review Period (Preconstruction)	Critical Path	Fatal Flaw
Regional Pollution Control District Authority to Construct (ATC) – San Luis Obispo Air Pollution Control District	Major source air permit will be required to account for the significant emission of PM-10 (>100 tons/year). The San Luis Obispo Air Pollution Control District is designated a state non-attainment area for PM-10 and PM-2.5 that will necessitate securing PM-10 emission offsets. Currently, only 31 tons of PM-10 credits are available in this District. Given the improbable case where additional emission offsets can be generated, the lack of sufficient PM-10 offsets will effectively preclude the ability to receive an associated major source air permit to construct.	Permit review process is not expected to be successful.	Potentially	Yes
Regional Control District Permit to Operate (PTO) – San Luis Obispo Air Pollution Control District	.Major source air permit will be required to account for the significant emission of PM-10 (>100 tons/year). The San Luis Obispo Air Pollution Control District is designated a state non-attainment area for PM-10 and PM-2.5 that will necessitate securing PM-10 emission offsets. Currently, only 31 tons of PM-10 credits are available in this District. Given the improbable case where additional emission offsets can be generated, the lack of sufficient PM-10 offsets will effectively preclude the ability to receive an associated major source air permit to construct.	Permit review process is not expected to be successful	No	Yes
Title V Federal Operating Permit –San Luis Obispo Air Pollution Control District and USEPA	A Title V Federal Operating Permit will be needed. The lack of sufficient PM-10 offsets will effectively preclude receipt of this permit.	Permit review process is not expected to be successful	No	Yes
Title IV Acid Rain Permit - USEPA	Not applicable – no major sources of acid rain air pollution	Not applicable	NA	NA
Dust Control Plan – San Luis Obispo Air Pollution Control District	Construction projects that emit particulate matter must comply with PM-10 standards via a Dust Control Plan.	Plans development: 1 month	No	No

Table CC-7
Environmental Permit/Approval Assessment: Wet Natural Draft Cooling Towers (Saltwater)
Diablo Canyon Power Plant *(cont.)*

Permit/Approval	Assessment	Permit Review Period (Preconstruction)	Critical Path	Fatal Flaw
NPDES Industrial Discharge Permit – Central Coast Regional Water Quality Control Board (RWQCB) and State Water Resources Control Board	Changes in the quantity and quality of the cooling system discharge will necessitate a change in the NPDES permit that is based on a once-through system. The water withdrawal and discharge will be significantly decreased, but there will be changes in the water treatment processes (additional biocides and other treatment chemicals). The modification of the current NPDES permit to reflect the NDW tower system is not expected to generate significant issues.	~6 months	No	No
Notice of Intent (NOI) – National Pollutant Discharge Elimination System General Permit for Storm Water Discharges Associated with Construction Activity, Central Coast Regional Water Quality Control Board (RWQCB)	Land disturbances associated with the NDW system will substantially exceed the 1 acre threshold level necessitating the submittal of Notice of Intent (NOI) and development of Storm Water Pollution Prevention Plan.	Electronic submittal – 1 week process	No	No
Storm Water Pollution Prevention Plan (SWPPP) – National Pollutant Discharge Elimination System General Permit for Storm Water Discharges Associated with Construction Activity – Central Coast Regional Quality Control Board (RWQCB)	Land disturbances associated with the NDW system will substantially exceed the 1 acre threshold level necessitating the submittal of Notice of Intent (NOI) and development of Storm Water Pollution Prevention Plan.	SWPPP development process (3-months)	No	No
Notice of Intent (NOI) – National Pollutant Discharge Elimination System General Permit for Storm Water Discharges Associated with Industrial Activity, Central Coast Regional Water Quality Control Board (RWQCB)	Not applicable - DCPP NPDES permit addresses operational storm water – there is no operational phase Notice of Intent for this facility.	Not applicable	NA	NA
Storm Water Pollution Prevention Plan (SWPPP) – National Pollutant Discharge Elimination System General Permit for Storm Water Discharges Associated with Industrial Activity, Central Coast Regional Quality Control Board (RWQCB)	Not applicable - DCPP NPDES permit addresses operational storm water – there is no separate operational phase SWPPP.	Not applicable	NA	NA

Table CC-7
Environmental Permit/Approval Assessment: Wet Natural Draft Cooling Towers (Saltwater)
Diablo Canyon Power Plant *(cont.)*

Permit/Approval	Assessment	Permit Review Period (Preconstruction)	Critical Path	Fatal Flaw
2081 Permit for California Endangered Species Act of 1984 (Fish & Game Code, §2050 through 2098) – California Department of Fish & Game (CDFG)	Potentially applicable - cooling tower site area will impact undeveloped upland areas that could include grassland and chaparral habitat. There will also be water pipeline crossings of the riparian habitat along Diablo Creek.	Potentially, part of CEQA Review	No	No
Lake and Streambed Alteration Agreement - California Department of Fish & Game (CDFG)	Potentially applicable - if cooling tower site area disturbance involves impacts to jurisdictional streambed areas (waters of the state).	1-2 months, (if application complete) Note recent history indicates this could extend to 4 to 6 months.	No	No
Waste Discharge Requirements (WDR) – Central Coast Regional Water Quality Control Board (RWQCB)	Potentially applicable - if cooling tower site area disturbance involves impacts to jurisdictional streambed (waters of the state)	4-6 months	No	No
Section 106 Review – Office of Historic Preservation (OHP)	Potential for Historical Review – part of CEQA review process.	Integral to CEQA review process.	No	No
Notification of Waste Activity - RCRA Hazardous Waste Identification Number (Small Quantity Generator) – Construction Phase - Department of Toxic Substance Control, USEPA, San Luis Obispo County Environment Health Services - California Unified Program Agency	Potentially necessary for construction of the towers, unless current DCPP ID will be used.	1-2 weeks	No	No
Notification of Waste Activity - RCRA Hazardous Waste Identification Number (Small Quantity Generator) – Operation - Department of Toxic Substance Control, USEPA, San Luis Obispo County Environmental Health Services - California Unified Program Agency	DCPP likely will continue to be able to continue to use their existing hazardous waste ID number. There will be no impacts to the onsite hazardous treatment facility (oil separation unit).	Not Preconstruction Permit	No	No

Table CC-7
Environmental Permit/Approval Assessment: Wet Natural Draft Cooling Towers (Saltwater)
Diablo Canyon Power Plant *(cont.)*

Permit/Approval	Assessment	Permit Review Period (Preconstruction)	Critical Path	Fatal Flaw
SPCC Plan - 40 CFR 112 and Aboveground Petroleum Storage Act – San Luis Obispo Environmental Health Services- California Unified Program Agency and USEPA	DCPP will likely have to modify their existing SPCC plan in response to potential for new aboveground storage tanks of applicable petroleum materials.	1-2 months plan development	No	No
Underground Storage Tank Permit - San Luis Obispo County Environmental Health - California Unified Program Agency and State Water Resources Board	The new cooling towers could force the relocation of underground tanks mandating new permits from the county and revised inspection programs.	1-2 months	No	No
Risk Management Plan (Clean Air Act 112r) – San Luis Obispo County Environmental Health Services - California Unified Program Agency and USEPA	If new volatile chemicals are needed to support NDW cooling tower operation, a Risk Management Plan may be needed to assess the offsite impacts of a release of the subject chemical.	Not a preconstruction requirement.	No	No
Emergency Planning and Community Right-to-Know Act (EPCRA) – 40 CFR 311 & 312 - San Luis Obispo County Environmental Health Services - California Unified Program Agency and USEPA	If new chemicals are stored in quantities that exceed applicable thresholds (e.g., 10,000 lbs for hazardous chemicals, 500 lbs for extremely hazardous chemicals), additional notification reports will need to be sent to the county.	Not a preconstruction requirement	No	No
Land Use Zones/Districts Approval - San Luis Obispo County Department of Planning and Building	The county will likely evaluate consistency of the proposed cooling tower development with the current land use designation.	Dependent of the duration of the CEQA/EIR process (> 1 year).	Potential	Potential
Condition Use Plan Amendment - San Luis Obispo County Department of Planning and Building	A Conditional Use Plan will be issued based on the findings of the CEQA review process.	Dependent of the duration of the CEQA/EIR process (> 1 year).	Potential	Potential
Grading Plan Approval or Permit - San Luis Obispo County Department of Public Works & Planning and Building	Grading plan permits will be necessary to support construction.	4-6 weeks –following completion of CEQA and conditional use permit	No	No
Erosion and Sediment Control Plan (Rain Event Action Plan) - San Luis Obispo County Department of Public Works	Similar to construction phase SWPPP. No separate submittal is expected to be directed to the county.	See SWPPP discussion	No	No

Table CC-7
Environmental Permit/Approval Assessment: Wet Natural Draft Cooling Towers (Saltwater)
Diablo Canyon Power Plant *(cont.)*

Permit/Approval	Assessment	Permit Review Period (Preconstruction)	Critical Path	Fatal Flaw
Building Permit (including plumbing and electrical) – San Obispo County Building Division	Building permits will be necessary to support construction.	4-6 weeks –following completion of CEQA and conditional use permit	No	No
Domestic Water Supply Permit (public potable water) - San Obispo County Department of Environmental Health	Not applicable – no new potable water systems are planned.	Not applicable	NA	NA
San Luis Obispo County Well Water Permit - San Luis Obispo County Environmental Health Services	No new wells to be developed will be developed in support of saltwater cooling towers.	Not applicable – saltwater option.	NA	NA
California Department of Transportation (Caltrans) – Oversize/Overweight Vehicles	Potentially applicable - if some of the tower elements prove to be oversized.	Not a preconstruction requirement.	No	No
Caltrans Heavy Haul Report (transport and delivery of heavy and oversized loads)	Potentially applicable - if some of the tower elements prove to be oversized.	Not a preconstruction requirement.	No	No
Resource Conservation (RC) Land Use Management Approval	Not applicable - while local municipality rules may supersede this regional land use//watershed protection-related project approval process, this is not the case for DCPP.	1-4 months, if application complete	NA	NA
Temporary Power Pole – Local municipality or San Luis Obispo County Public Works Department	Local power poles may be needed during the course of construction.	Not a Preconstruction Approvals	No	No
Fire Safety Plan Approval, Certificate of Occupancy, Flammable Storage – San Luis Obispo County Fire Department	While the addition of NDW towers may require revisions to the existing Fire Safety Plan, the tower system is not expected to include new occupied structures,	1 month for approval of Fire Safety Plan.	No	No
Sewer and Sewer Connections – San Luis Obispo County Environmental Health Services	Not applicable - no new sanitary connections are envisioned.	Not applicable.	NA	NA
Road Crossing or Encroachment Permit (Caltrans, San Luis Obispo County)	Not applicable – the addition of the tower system is not expected to pose any road crossing or encroachment issues.	Not applicable.	NA	NA

Table CC-8
Environmental Permit/Approval Assessment: Wet Natural Draft Cooling Towers (Fresh and Reclaimed Water)
Diablo Canyon Power Plant

Permit/Approval	Assessment	Permit Review Period (Preconstruction)	Critical Path	Fatal Flaw
National Environmental Policy Act – BLM or Other Responsible Lead Federal Agency (Record of Decision, Right of Way)	Not applicable – if Project does not constitute major federal action (federal land, funding). Please note that if NEPA is triggered it could involve a 12-18 month review period.	Not applicable	NA	NA
Section 404/10 Permit – U.S. Army Corps of Engineers (USACE)	Not applicable – water supply is assumed to be available at the site boundary. There are no impacts to jurisdictional waters.	Not applicable	NA	NA
Section 401 Water Quality Certificate – U.S. Army Corps of Engineers (USACE) & Regional Quality Control Board (RWQCB)	Not applicable – if the water supply is assumed to be available at the site boundary. There are no impacts to jurisdictional waters.	Not applicable	NA	NA
Nationwide Permit – U.S. Army Corps of Engineers	The tower construction will impact unoccupied, potentially undeveloped land that could include grassland and chaparral habitat. Pipelines will cross riparian habitat along Diablo Creek.	Potentially part of CEQA Review	No	No
Section 7 Consultation with U.S. Fish and Wildlife Service (Endangered Species Act of 1973)	Not applicable - if eventual cooling tower site area is within a developed or disturbed area.	Potentially part of CEQA Review	No	No
Notice of Proposed Construction or Alteration – Federal Aviation Administration (FAA), Permanent Facilities	Applicable because NDW towers will be taller than 200 feet agl and represent a potential obstruction to local aviation.	1-2 months	No	No
Notice of Proposed Construction or Alteration – FAA, Temporary Facilities	Applicable because temporary structures (e.g., cranes) will be taller than 200 feet agl and represent a potential obstruction to local aviation.	1-2 months	No	No
Multiple-Use Class L Limited Land Use Designated Utility Corridor – Bureau of Land Management (BLM) or Other Responsible Federal Agency	Not applicable - the addition of the cooling tower system will not require any additional federal land.	Not applicable	No	No

Table CC-8
Environmental Permit/Approval Assessment: Wet Natural Draft Cooling Towers (Fresh and Reclaimed Water)
Diablo Canyon Power Plant *(cont.)*

Permit/Approval	Assessment	Permit Review Period (Preconstruction)	Critical Path	Fatal Flaw
California Public Utility Commission (CPUC) Approval	CPUC may share the lead agency CEQA responsibilities for the proposed NDW cooling tower technology. The CEQA review process trigger development of a comprehensive EIR.	12 months nominally	Potential	Potential
California Energy Commission (CEC) – Final Decision	Not applicable - this process is only applicable if there is a power capacity (increase) > 50 MW, the threshold for review by the CEC. An NDW system will not result in increased power output, so there will be no CEC-sponsored CEQA review or specific permits or approvals.	Not applicable	NA	NA
Coastal Development Permit - California Coastal Commission/Local Coastal Programs	Applicable for cooling tower development within the coastal zone that includes all of the DCPP property. While there are no initial fatal flaws with the NDW tower system, the extreme height of the tower system and unabated plume could result in visual impacts that are ultimately found unacceptable by the Commission.	A 3 to 9 month process is advertised, but longer if CEQA review process (CEQA/EIR) is triggered.	Potential	Potential
Coastal Development Lease – California State Lands Commission and potential California Environmental Quality Act (CEQA) Lead Agency	The State Land Commission will evaluate the expected impacts to marine environment associated with addition of NDW cooling tower system and determine if a Categorical Exemption (unlikely) or Mitigated Negative Declaration applies. These impacts could trigger the Commission to initiate the CEQA/EIR review process.	Dependent of the duration of the CEQA/EIR process (> 1 year).	Potential	No
Regional Pollution Control District Authority to Construct (ATC) – San Luis Obispo Air Pollution Control District	With freshwater and reclaimed water, the NDW towers do not require a major source air permit because of PM-10 emissions (<100 tons/year) and will therefore not require PM-10 emission offsets.	Not applicable	NA	NA
Regional Control District Permit to Operate (PTO) – San Luis Obispo Air Pollution Control District	With freshwater and reclaimed water, the NDW towers do not require a major source air permit because of PM-10 emissions (<100 tons/year) and will therefore not require PM-10 emission offsets.	Not applicable	NA	NA

Table CC-8
Environmental Permit/Approval Assessment: Wet Natural Draft Cooling Towers (Fresh and Reclaimed Water)
Diablo Canyon Power Plant *(cont.)*

Permit/Approval	Assessment	Permit Review Period (Preconstruction)	Critical Path	Fatal Flaw
Title V Federal Operating Permit – San Luis Obispo Air Pollution Control District and USEPA	Not applicable - a Title V Federal Operating Permit will not be needed for the freshwater or reclaimed water options.	Not applicable	NA	NA
Title IV Acid Rain Permit - USEPA	Not applicable – no major sources of acid rain air pollution	Not applicable	NA	NA
Dust Control Plan – San Luis Obispo Air Pollution Control District	Construction projects that emit particulate matter must comply with PM-10 standards via a Dust Control Plan.	Plans development: 1 month	No	No
NPDES Industrial Discharge Permit – Central Coast Regional Water Quality Control Board (RWQCB) and State Water Resources Control Board	Changes in the quantity and quality of the cooling system discharge will necessitate a change in the NPDES permit, which is based on a once-through system. The water withdrawal from the ocean will be discontinued and the discharge will be significantly decreased. There will be changes in the water treatment processes (additional biocides and other treatment chemicals). The modification of the current NPDES permit to reflect the NDW tower system is not expected to generate significant issues.	~6 months	No	No
Notice of Intent (NOI) – National Pollutant Discharge Elimination System General Permit for Storm Water Discharges Associated with Construction Activity, Central Coast Regional Water Quality Control Board (RWQCB)	Land disturbances associated with the NDW tower system will substantially exceed the 1 acre threshold level necessitating the submittal of Notice of Intent (NOI) and development of Storm Water Pollution Prevention Plan.	Electronic submittal – 1 week process	No	No
Storm Water Pollution Prevention Plan (SWPPP) – National Pollutant Discharge Elimination System General Permit for Storm Water Discharges Associated with Construction Activity –Central Coast Regional Quality Control Board (RWQCB)	Land disturbances associated with the NDW tower system will substantially exceed the 1 acre threshold level necessitating the submittal of Notice of Intent (NOI) and development of Storm Water Pollution Prevention Plan.	SWPPP development process (3-months)	No	No

Table CC-8
Environmental Permit/Approval Assessment: Wet Natural Draft Cooling Towers (Fresh and Reclaimed Water)
Diablo Canyon Power Plant *(cont.)*

Permit/Approval	Assessment	Permit Review Period (Preconstruction)	Critical Path	Fatal Flaw
Notice of Intent (NOI) – National Pollutant Discharge Elimination System General Permit for Storm Water Discharges Associated with Industrial Activity, Central Coast Regional Water Quality Control Board (RWQCB)	Not applicable - DCPP NPDES permit addresses operational storm water – there is no operational phase Notice of Intent for this facility.	Not applicable	NA	NA
Storm Water Pollution Prevention Plan (SWPPP) – National Pollutant Discharge Elimination System General Permit for Storm Water Discharges Associated with Industrial Activity, Central Coast Regional Quality Control Board (RWQCB)	Not applicable - DCPP NPDES permit addresses operational storm water – there is no separate operational phase SWPPP.	Not applicable	NA	NA
2081 Permit for California Endangered Species Act of 1984 (Fish & Game Code, §2050 through 2098) – California Department of Fish & Game (CDFG)	Not applicable - if eventual cooling tower site area is within a developed or disturbed area.	Potentially, part of CEQA Review	No	No
Lake and Streambed Alteration Agreement - California Department of Fish & Game (CDFG)	Potentially applicable - if cooling tower site area disturbance involves impacts to jurisdictional streambed areas (waters of the state).	1-2 months, (if application complete) Note recent history indicates this could extend to 4 to 6 months.	No	No
Waste Discharge Requirements (WDR) –Central Coast Regional Water Quality Control Board (RWQCB)	Potentially applicable - if cooling tower site area disturbance involves impacts to jurisdictional streambed (waters of the state)	4-6 months	No	No
Section 106 Review – Office of Historic Preservation (OHP)	Potential for Historical Review – part of CEQA review process.	Integral to CEQA review process.	No	No
Notification of Waste Activity - RCRA Hazardous Waste Identification Number (Small Quantity Generator) – Construction Phase - Department of Toxic Substance Control, USEPA, San Luis Obispo County Environment Health Services - California Unified Program Agency	Potentially necessary for construction of the towers, unless current DCPP ID will be used.	1-2 weeks	No	No

Table CC-8
Environmental Permit/Approval Assessment: Wet Natural Draft Cooling Towers (Fresh and Reclaimed Water)
Diablo Canyon Power Plant *(cont.)*

Permit/Approval	Assessment	Permit Review Period (Preconstruction)	Critical Path	Fatal Flaw
Notification of Waste Activity - RCRA Hazardous Waste Identification Number (Small Quantity Generator) – Operation - Department of Toxic Substance Control, USEPA, San Luis Obispo County Environmental Health Services - California Unified Program Agency	DCPP likely will continue to be able to continue to use their existing hazardous waste ID number. There will be no impacts to the onsite hazardous treatment facility (oil separation unit).	Not Preconstruction Permit	No	No
SPCC Plan - 40 CFR 112 and Aboveground Petroleum Storage Act – San Luis Obispo Environmental Health Services- California Unified Program Agency and USEPA	DCPP will likely have to modify their existing SPCC plan in response to potential for new aboveground storage tanks of applicable petroleum materials.	1-2 months plan development	No	No
Underground Storage Tank Permit - San Luis Obispo County Environmental Health - California Unified Program Agency and State Water Resources Board	The new cooling towers could force the relocation of underground tanks mandating new permits from the county and revised inspection programs.	1-2 months	No	No
Risk Management Plan (Clean Air Act 112r) – San Luis Obispo County Environmental Health Services - California Unified Program Agency and USEPA	If new volatile chemicals are needed to support NDW cooling tower operation, a Risk Management Plan may be needed to assess the offsite impacts of a release of the subject chemical.	Not a preconstruction requirement.	No	No
Emergency Planning and Community Right-to-Know Act (EPCRA) – 40 CFR 311 & 312 - San Luis Obispo County Environmental Health Services - California Unified Program Agency and USEPA	If new chemicals are stored in quantities that exceed applicable thresholds (e.g., 10,000 lbs for hazardous chemicals, 500 lbs for extremely hazardous chemicals), additional notification reports will need to be sent to the county.	Not a preconstruction requirement	No	No
Land Use Zones/Districts Approval - San Luis Obispo County Department of Planning and Building	The county will likely evaluate consistency of the proposed cooling tower development with the current land use designation.	Dependent of the duration of the CEQA/EIR process (> 1 year).	Potential	Potential
Condition Use Plan Amendment - San Luis Obispo County Department of Planning and Building	A Conditional Use Plan will be issued based on the findings of the CEQA review process.	Dependent of the duration of the CEQA/EIR process (> 1 year).	Potential	Potential

Table CC-8
Environmental Permit/Approval Assessment: Wet Natural Draft Cooling Towers (Fresh and Reclaimed Water)
Diablo Canyon Power Plant *(cont.)*

Permit/Approval	Assessment	Permit Review Period (Preconstruction)	Critical Path	Fatal Flaw
Grading Plan Approval or Permit - San Luis Obispo County Department of Public Works & Planning and Building	Grading plan permits will be necessary to support construction.	4-6 weeks –following completion of CEQA and conditional use permit	No	No
Erosion and Sediment Control Plan (Rain Event Action Plan) - San Luis Obispo County Department of Public Works	Similar to construction phase SWPPP. No separate submittal is expected to be directed to the county.	See SWPPP discussion	No	No
Building Permit (including plumbing and electrical) – San Obispo County Building Division	Building permits will be necessary to support construction.	4-6 weeks –following completion of CEQA and conditional use permit	No	No
Domestic Water Supply Permit (public potable water) - San Obispo County Department of Environmental Health	Not applicable – no new potable water systems are planned. The delivery of offsite freshwater to the site is not addressed by this permit.	Not applicable	NA	NA
San Luis Obispo County Well Water Permit - San Luis Obispo County Environmental Health Services	The freshwater supply option could demand the addition of onsite wells.	1 -2 weeks (freshwater supply option)	No	No
California Department of Transportation (Caltrans) – Oversize/Overweight Vehicles	Potentially applicable - if some of the tower elements prove to be oversized.	Not a preconstruction requirement.	No	No
Caltrans Heavy Haul Report (transport and delivery of heavy and oversized loads)	Potentially applicable - if some of the tower elements prove to be oversized.	Not a preconstruction requirement.	No	No
Resource Conservation (RC) Land Use Management Approval	While local municipality rules may supersede this regional land use//watershed protection-related project approval process, this is not the case for DCPP.	1-4 months, if application complete	NA	NA
Temporary Power Pole – Local municipality or San Luis Obispo County Public Works Department	Local power poles may be needed during the course of construction.	Not Preconstruction Approvals	No	No
Fire Safety Plan Approval, Certificate of Occupancy, Flammable Storage – San Luis Obispo County Fire Department	While the addition of NDW towers may require revisions to the existing Fire Safety Plan, the tower system is not expected to include new occupied structures,	1 month for approval of Fire Safety Plan.	No	No
Sewer and Sewer Connections – San Luis Obispo County Environmental Health Services	Not applicable - no new sanitary connections are envisioned.	Not applicable.	NA	NA

Table CC-8
Environmental Permit/Approval Assessment: Wet Natural Draft Cooling Towers (Fresh and Reclaimed Water)
Diablo Canyon Power Plant *(cont.)*

Permit/Approval	Assessment	Permit Review Period (Preconstruction)	Critical Path	Fatal Flaw
Road Crossing or Encroachment Permit (Caltrans, San Luis Obispo County)	The freshwater and reclaimed water pipeline routes have not been determined. Encroachment permits and related engineering studies remain a possibility.	1-3 months.	No	No

Table CC-9
Environmental Permit/Approval Assessment: Wet Mechanical Draft (forced) (Saltwater)
Diablo Canyon Power Plant

Permit/Approval	Assessment	Permit Review Period (Preconstruction)	Critical Path	Fatal Flaw
National Environmental Policy Act – BLM or Other Responsible Lead Federal Agency (Record of Decision, Right of Way)	Not applicable – if Project does not constitute major federal action (federal land, funding). Please note that if NEPA is triggered it could involve a 12-18 month review period.	NA	NA	NA
Section 404/10 Permit – U.S. Army Corps of Engineers (USACE)	Refashioning of the existing intake system for closed-cycle cooling is likely to generate significant impacts to waters of the U.S. and will involve work in navigable waters. Work associated with crossings of Diablo Creek could also represent significant impacts. Individual form of permit will be required	120 days from complete application (goal) ~12 months (expected)	Potential	No
Section 401 Water Quality Certificate – U.S. Army Corps of Engineers (USACE) & Regional Quality Control Board (RWQCB)	Section 401 permit process will parallel Section 404 permit process.	~12 months (expected)	No	No
Nationwide Permit – U.S. Army Corps of Engineers	Not applicable - the refashioning of the existing intake system for closed-cycle cooling will generate significant impacts to waters of the U.S. that cannot be addressed by the Nationwide permitting process.	Not applicable	No	No
Section 7 Consultation with U.S. Fish and Wildlife Service (Endangered Species Act of 1973)	The tower construction will impact unoccupied, potentially undeveloped land that could include grassland and chaparral habitat. Pipelines will cross riparian habitat along Diablo Creek.	Potentially part of CEQA Review	No	No
Notice of Proposed Construction or Alteration – Federal Aviation Administration (FAA), Permanent Facilities	Not applicable - hybrid wet/dry cooling towers will be less than 200 feet agl threshold for FAA review.	Not applicable	NA	NA
Notice of Proposed Construction or Alteration – FAA, Temporary Construction Facilities	Not applicable - hybrid wet/dry cooling towers will be less than 200 feet agl threshold for FAA review.	Not applicable	NA	NA
Multiple-Use Class L Limited Land Use Designated Utility Corridor – Bureau of Land Management (BLM) or Other Responsible Federal Agency	Not applicable - the addition of the cooling tower system will not require any additional federal land.	Not applicable	No	No

Table CC-9
Environmental Permit/Approval Assessment: Wet Mechanical Draft (forced) (Saltwater)
Diablo Canyon Power Plant *(cont.)*

Permit/Approval	Assessment	Permit Review Period (Preconstruction)	Critical Path	Fatal Flaw
California Public Utility Commission (CPUC) Approval	CPUC may share the lead agency CEQA responsibilities for the proposed MDW cooling tower technology. The CEQA review process trigger development of a comprehensive EIR.	12 months nominally	Potential	Potential
California Energy Commission (CEC) – Final Decision	Not applicable - this process is only applicable if there is a power capacity (increase) > 50 MW, the threshold for review by the CEC. An MDW system will not result in increased power output, so there will be no CEC-sponsored CEQA review or specific permits or approvals.	Not applicable	No	No
Coastal Development Permit - California Coastal Commission/Local Coastal Programs	Applicable for cooling tower development within the coastal zone that includes all of the DCPP property. While there are no initial fatal flaws with the MDW tower system, the extreme height of the tower system and unabated plume could result in visual impacts that are ultimately found unacceptable by the Commission.	A 3 to 9 month process is advertised, but longer if CEQA review process (CEQA/EIR) is triggered.	Potential	Potential
Coastal Development Lease – California State Lands Commission and potential California Environmental Quality Act (CEQA) Lead Agency	The State Land Commission will evaluate the expected impacts to marine environment associated with addition of and MDW cooling tower system and determine if a Categorical Exemption (unlikely) or Mitigated Negative Declaration applies. These impacts could trigger the Commission to initiate the CEQA/EIR review process.	Dependent of the duration of the CEQA/EIR process (> 1 year).	Potential	No

Table CC-9
Environmental Permit/Approval Assessment: Wet Mechanical Draft (forced) (Saltwater)
Diablo Canyon Power Plant *(cont.)*

Permit/Approval	Assessment	Permit Review Period (Preconstruction)	Critical Path	Fatal Flaw
Regional Pollution Control District Authority to Construct (ATC) – San Luis Obispo Air Pollution Control District	Major source air permit will be required to account for the significant emission of PM-10 (>100 tons/year). The San Luis Obispo Air Pollution Control District is designated a state non-attainment area for PM-10 and PM-2.5 that will necessitate securing PM-10 emission offsets. Currently, only 31 tons of PM-10 credits are available in this District. Given the improbable case where additional emission offsets can be generated, the lack of sufficient PM-10 offsets will effectively preclude the ability to receive an associated major source air permit to construct.	Permit review process is not expected to be successful.	Potentially	Yes
Regional Control District Permit to Operate (PTO) – San Luis Obispo Air Pollution Control District	.Major source air permit will be required to account for the significant emission of PM-10 (>100 tons/year). The San Luis Obispo Air Pollution Control District is designated a state non-attainment area for PM-10 and PM-2.5 that will necessitate securing PM-10 emission offsets. Currently, only 31 tons of PM-10 credits are available in this District. Given the improbable case where additional emission offsets can be generated, the lack of sufficient PM-10 offsets will effectively preclude the ability to receive an associated major source air permit to construct.	Permit review process is not expected to be successful	No	Yes
Title V Federal Operating Permit –San Luis Obispo Air Pollution Control District and USEPA	A Title V Federal Operating Permit will be needed. The lack of sufficient PM-10 offsets will effectively preclude receipt of this permit.	Permit review process is not expected to be successful	No	Yes
Title IV Acid Rain Permit - USEPA	Not applicable – no major sources of acid rain air pollution	Not applicable	NA	NA
Dust Control Plan – San Luis Obispo Air Pollution Control District	Construction projects that emit particulate matter must comply with PM-10 standards via a Dust Control Plan.	Plans development: 1 month	No	No

Table CC-9
Environmental Permit/Approval Assessment: Wet Mechanical Draft (forced) (Saltwater)
Diablo Canyon Power Plant *(cont.)*

Permit/Approval	Assessment	Permit Review Period (Preconstruction)	Critical Path	Fatal Flaw
NPDES Industrial Discharge Permit – Central Coast Regional Water Quality Control Board (RWQCB) and State Water Resources Control Board	Changes in the quantity and quality of the cooling system discharge will necessitate a change in the NPDES permit that is based on a once-through system. The water withdrawal and discharge will be significantly decreased, but there will be changes in the water treatment processes (additional biocides and other treatment chemicals). The modification of the current NPDES permit to reflect the MDW tower system is not expected to generate significant issues.	~6 months	No	No
Notice of Intent (NOI) – National Pollutant Discharge Elimination System General Permit for Storm Water Discharges Associated with Construction Activity, Central Coast Regional Water Quality Control Board (RWQCB)	Land disturbances associated with the MDW tower system will substantially exceed the 1 acre threshold level necessitating the submittal of Notice of Intent (NOI) and development of Storm Water Pollution Prevention Plan.	Electronic submittal – 1 week process	No	No
Storm Water Pollution Prevention Plan (SWPPP) – National Pollutant Discharge Elimination System General Permit for Storm Water Discharges Associated with Construction Activity – Central Coast Regional Quality Control Board (RWQCB)	Land disturbances associated with the MDW tower system will substantially exceed the 1 acre threshold level necessitating the submittal of Notice of Intent (NOI) and development of Storm Water Pollution Prevention Plan.	SWPPP development process (3-months)	No	No
Notice of Intent (NOI) – National Pollutant Discharge Elimination System General Permit for Storm Water Discharges Associated with Industrial Activity, Central Coast Regional Water Quality Control Board (RWQCB)	Not applicable - DCPP NPDES permit addresses operational storm water – there is no operational phase Notice of Intent for this facility.	Not applicable	NA	NA
Storm Water Pollution Prevention Plan (SWPPP) – National Pollutant Discharge Elimination System General Permit for Storm Water Discharges Associated with Industrial Activity, Central Coast Regional Quality Control Board (RWQCB)	Not applicable - DCPP NPDES permit addresses operational storm water – there is no separate operational phase SWPPP.	Not applicable	NA	NA

Table CC-9
Environmental Permit/Approval Assessment: Wet Mechanical Draft (forced) (Saltwater)
Diablo Canyon Power Plant *(cont.)*

Permit/Approval	Assessment	Permit Review Period (Preconstruction)	Critical Path	Fatal Flaw
2081 Permit for California Endangered Species Act of 1984 (Fish & Game Code, §2050 through 2098) – California Department of Fish & Game (CDFG)	Potentially applicable - cooling tower site area will impact undeveloped upland areas that could include grassland and chaparral habitat. There will also be water pipeline crossings of the riparian habitat along Diablo Creek.	Potentially, part of CEQA Review	No	No
Lake and Streambed Alteration Agreement - Department of Fish & Game (CDFG)	Potentially applicable - if cooling tower site area disturbance involves impacts to jurisdictional streambed areas (waters of the state).	1-2 months, (if application complete) Note recent history indicates this could extend to 4 to 6 months.	No	No
Waste Discharge Requirements (WDR) – Central Coast Regional Water Quality Control Board (RWQCB)	Potentially applicable - if cooling tower site area disturbance involves impacts to jurisdictional streambed (waters of the state)	4-6 months	No	No
Section 106 Review – Office of Historic Preservation (OHP)	Potential for Historical Review – part of CEQA review process.	Integral to CEQA review process.	No	No
Notification of Waste Activity - RCRA Hazardous Waste Identification Number (Small Quantity Generator) – Construction Phase - Department of Toxic Substance Control, USEPA, San Luis Obispo County Environment Health Services - California Unified Program Agency	Potentially necessary for construction of the towers, unless current DCPP ID will be used.	1-2 weeks	No	No
Notification of Waste Activity - RCRA Hazardous Waste Identification Number (Small Quantity Generator) – Operation - Department of Toxic Substance Control, USEPA, San Luis Obispo County Environmental Health Services - California Unified Program Agency	DCPP likely will continue to be able to continue to use their existing hazardous waste ID number. There will be no impacts to the onsite hazardous treatment facility (oil separation unit).	Not Preconstruction Permit	No	No

Table CC-9
Environmental Permit/Approval Assessment: Wet Mechanical Draft (forced) (Saltwater)
Diablo Canyon Power Plant *(cont.)*

Permit/Approval	Assessment	Permit Review Period (Preconstruction)	Critical Path	Fatal Flaw
SPCC Plan - 40 CFR 112 and Aboveground Petroleum Storage Act – San Luis Obispo Environmental Health Services- California Unified Program Agency and USEPA	DCPP will likely have to modify their existing SPCC plan in response to potential for new aboveground storage tanks of applicable petroleum materials.	1-2 months plan development	No	No
Underground Storage Tank Permit - San Luis Obispo County Environmental Health - California Unified Program Agency and State Water Resources Board	The new cooling towers could force the relocation of underground tanks mandating new permits from the county and revised inspection programs.	1-2 months	No	No
Risk Management Plan (Clean Air Act 112r) – San Luis Obispo County Environmental Health Services - California Unified Program Agency and USEPA	If new volatile chemicals are needed to support MDW cooling tower operation, a Risk Management Plan may be needed to assess the offsite impacts of a release of the subject chemical.	Not a preconstruction requirement.	No	No
Emergency Planning and Community Right-to-Know Act (EPCRA) – 40 CFR 311 & 312 - San Luis Obispo County Environmental Health Services - California Unified Program Agency and USEPA	If new chemicals are stored in quantities that exceed applicable thresholds (e.g., 10,000 lbs for hazardous chemicals, 500 lbs for extremely hazardous chemicals), additional notification reports will need to be sent to the county.	Not a preconstruction requirement	No	No
Land Use Zones/Districts Approval - San Luis Obispo County Department of Planning and Building	The county will likely evaluate consistency of the proposed cooling tower development with the current land use designation.	Dependent of the duration of the CEQA/EIR process (> 1 year).	Potential	Potential
Condition Use Plan Amendment - San Luis Obispo County Department of Planning and Building	A Conditional Use Plan will be issued based on the findings of the CEQA review process.	Dependent of the duration of the CEQA/EIR process (> 1 year).	Potential	Potential
Grading Plan Approval or Permit - San Luis Obispo County Department of Public Works & Planning and Building	Grading plan permits will be necessary to support construction.	4-6 weeks –following completion of CEQA and conditional use permit	No	No
Erosion and Sediment Control Plan (Rain Event Action Plan) - San Luis Obispo County Department of Public Works	Similar to construction phase SWPPP. No separate submittal is expected to be directed to the county.	See SWPPP discussion	No	No

Table CC-9
Environmental Permit/Approval Assessment: Wet Mechanical Draft (forced) (Saltwater)
Diablo Canyon Power Plant *(cont.)*

Permit/Approval	Assessment	Permit Review Period (Preconstruction)	Critical Path	Fatal Flaw
Building Permit (including plumbing and electrical) – San Obispo County Building Division	Building permits will be necessary to support construction.	4-6 weeks –following completion of CEQA and conditional use permit	No	No
Domestic Water Supply Permit (public potable water) - San Obispo County Department of Environmental Health	Not applicable – no new potable water systems are planned.	Not applicable	NA	NA
San Luis Obispo County Well Water Permit - San Luis Obispo County Environmental Health Services	No new wells to be developed will be developed in support of saltwater cooling towers.	Not applicable – saltwater option.	NA	NA
California Department of Transportation (Caltrans) – Oversize/Overweight Vehicles	Potentially applicable - if some of the tower elements prove to be oversized.	Not a preconstruction requirement.	No	No
Caltrans Heavy Haul Report (transport and delivery of heavy and oversized loads)	Potentially applicable - if some of the tower elements prove to be oversized.	Not a preconstruction requirement.	No	No
Resource Conservation (RC) Land Use Management Approval	Not applicable - while local municipality rules may supersede this regional land use//watershed protection-related project approval process, this is not the case for DCPP.	1-4 months, if application complete	NA	NA
Temporary Power Pole – Local municipality or San Luis Obispo County Public Works Department	Local power poles may be needed during the course of construction.	Not a Preconstruction Approvals	No	No
Fire Safety Plan Approval, Certificate of Occupancy, Flammable Storage – San Luis Obispo County Fire Department	While the addition of MDW towers may require revisions to the existing Fire Safety Plan, the tower system is not expected to include new occupied structures,	1 month for approval of Fire Safety Plan.	No	No
Sewer and Sewer Connections – San Luis Obispo County Environmental Health Services	Not applicable - no new sanitary connections are envisioned.	Not applicable.	NA	NA
Road Crossing or Encroachment Permit (Caltrans, San Luis Obispo County)	Not applicable – the addition of the tower system is not expected to pose any road crossing or encroachment issues.	Not applicable.	NA	NA

Table CC-10.
Environmental Permit/Approval Assessment: Wet Mechanical Draft (Forced) (Fresh and Reclaimed)
Diablo Canyon Power Plant

Permit/Approval	Assessment	Permit Review Period (Preconstruction)	Critical Path	Fatal Flaw
National Environmental Policy Act – BLM or Other Responsible Lead Federal Agency (Record of Decision, Right of Way)	Not applicable – if Project does not constitute major federal action (federal land, funding). Please note that if NEPA is triggered it could involve a 12-18 month review period.	Not applicable	NA	NA
Section 404/10 Permit – U.S. Army Corps of Engineers (USACE)	Not applicable – water supply is assumed to be available at the site boundary. There are no impacts to jurisdictional waters.	Not applicable	NA	NA
Section 401 Water Quality Certificate – U.S. Army Corps of Engineers (USACE) & Regional Quality Control Board (RWQCB)	Not applicable – if the water supply is assumed to be available at the site boundary. There are no impacts to jurisdictional waters.	Not applicable	NA	NA
Nationwide Permit – U.S. Army Corps of Engineers	Not applicable – if the water supply is assumed to be available at the site boundary. There are no impacts to jurisdictional waters.	Not applicable	No	No
Section 7 Consultation with U.S. Fish and Wildlife Service (Endangered Species Act of 1973)	Not applicable - if eventual cooling tower site area is within a developed or disturbed area.	Potentially part of CEQA Review	No	No
Notice of Proposed Construction or Alteration – Federal Aviation Administration (FAA), Permanent Facilities	Not applicable – MDW towers will be less than 200 feet agl threshold for FAA review.	Not applicable	NA	NA
Notice of Proposed Construction or Alteration – FAA, Temporary Construction Facilities	Not applicable – MDW towers will be less than 200 feet agl threshold for FAA review.	Not applicable	NA	NA
Multiple-Use Class L Limited Land Use Designated Utility Corridor – Bureau of Land Management (BLM) or Other Responsible Federal Agency	Not applicable - the addition of the cooling tower system will not require any additional federal land.	Not applicable	No	No

Table CC-10.
Environmental Permit/Approval Assessment: Wet Mechanical Draft (Forced) (Fresh and Reclaimed)
Diablo Canyon Power Plant *(cont.)*

Permit/Approval	Assessment	Permit Review Period (Preconstruction)	Critical Path	Fatal Flaw
California Public Utility Commission (CPUC) Approval	CPUC may share the lead agency CEQA responsibilities for the proposed MDW cooling tower technology. The CEQA review process trigger development of a comprehensive EIR.	12 months nominally	Potential	Potential
California Energy Commission (CEC) – Final Decision	Not applicable - this process is only applicable if there is a power capacity (increase) > 50 MW, the threshold for review by the CEC. An MDW tower system will not result in increased power output, so there will be no CEC-sponsored CEQA review or specific permits or approvals.	Not applicable	NA	NA
Coastal Development Permit - California Coastal Commission/Local Coastal Programs	Applicable for cooling tower development within the coastal zone that includes all of the DCPP property. While there are no initial fatal flaws with the MDW tower system, the extreme height of the tower system and unabated plume could result in visual impacts that are ultimately found unacceptable by the Commission.	A 3 to 9 month process is advertised, but longer if CEQA review process (CEQA/EIR) is triggered.	Potential	Potential
Coastal Development Lease – California State Lands Commission and potential California Environmental Quality Act (CEQA) Lead Agency	The State Land Commission will evaluate the expected impacts to marine environment associated with addition of MDW cooling tower system and determine if a Categorical Exemption (unlikely) or Mitigated Negative Declaration applies. These impacts could trigger the Commission to initiate the CEQA/EIR review process.	Dependent of the duration of the CEQA/EIR process (> 1 year).	Potential	No
Regional Pollution Control District Authority to Construct (ATC) – San Luis Obispo Air Pollution Control District	With freshwater and reclaimed water, the MDW towers do not require a major source air permit because of PM-10 emissions (<100 tons/year) and will therefore not require PM-10 emission offsets.	Not applicable	NA	NA
Regional Control District Permit to Operate (PTO) – San Luis Obispo Air Pollution Control District	With freshwater and reclaimed water, the MDW towers do not require a major source air permit because of PM-10 emissions (<100 tons/year) and will therefore not require PM-10 emission offsets.	Not applicable	NA	NA

Table CC-10.
Environmental Permit/Approval Assessment: Wet Mechanical Draft (Forced) (Fresh and Reclaimed)
Diablo Canyon Power Plant *(cont.)*

Permit/Approval	Assessment	Permit Review Period (Preconstruction)	Critical Path	Fatal Flaw
Title V Federal Operating Permit – San Luis Obispo Air Pollution Control District and USEPA	Not applicable - a Title V Federal Operating Permit will not be needed for the freshwater or reclaimed water options.	Not applicable	NA	NA
Title IV Acid Rain Permit - USEPA	Not applicable – no major sources of acid rain air pollution	Not applicable	NA	NA
Dust Control Plan – San Luis Obispo Air Pollution Control District	Construction projects that emit particulate matter must comply with PM-10 standards via a Dust Control Plan.	Plans development: 1 month	No	No
NPDES Industrial Discharge Permit – Central Coast Regional Water Quality Control Board (RWQCB) and State Water Resources Control Board	Changes in the quantity and quality of the cooling system discharge will necessitate a change in the NPDES permit, that is based on a once-through system. The water withdrawal from the ocean will be discontinued and the discharge will be significantly decreased. There will be changes in the water treatment processes (additional biocides and other treatment chemicals). The modification of the current NPDES permit to reflect the MDW tower system is not expected to generate significant issues.	~6 months	No	No
Notice of Intent (NOI) – National Pollutant Discharge Elimination System General Permit for Storm Water Discharges Associated with Construction Activity, Central Coast Regional Water Quality Control Board (RWQCB)	Land disturbances associated with the MDW tower system will substantially exceed the 1 acre threshold level necessitating the submittal of Notice of Intent (NOI) and development of Storm Water Pollution Prevention Plan.	Electronic submittal – 1 week process	No	No
Storm Water Pollution Prevention Plan (SWPPP) – National Pollutant Discharge Elimination System General Permit for Storm Water Discharges Associated with Construction Activity –Central Coast Regional Quality Control Board (RWQCB)	Land disturbances associated with the MDW tower system will substantially exceed the 1 acre threshold level necessitating the submittal of Notice of Intent (NOI) and development of Storm Water Pollution Prevention Plan.	SWPPP development process (3-months)	No	No

Table CC-10.
Environmental Permit/Approval Assessment: Wet Mechanical Draft (Forced) (Fresh and Reclaimed)
Diablo Canyon Power Plant *(cont.)*

Permit/Approval	Assessment	Permit Review Period (Preconstruction)	Critical Path	Fatal Flaw
Notice of Intent (NOI) – National Pollutant Discharge Elimination System General Permit for Storm Water Discharges Associated with Industrial Activity, Central Coast Regional Water Quality Control Board (RWQCB)	Not applicable - DCPP NPDES permit addresses operational storm water – there is no operational phase Notice of Intent for this facility.	Not applicable	NA	NA
Storm Water Pollution Prevention Plan (SWPPP) – National Pollutant Discharge Elimination System General Permit for Storm Water Discharges Associated with Industrial Activity, Central Coast Regional Quality Control Board (RWQCB)	Not applicable - DCPP NPDES permit addresses operational storm water – there is no separate operational phase SWPPP.	Not applicable	NA	NA
2081 Permit for California Endangered Species Act of 1984 (Fish & Game Code, §2050 through 2098) – California Department of Fish & Game (CDFG)	Not applicable - if eventual cooling tower site area is within a developed or disturbed area.	Potentially, part of CEQA Review	No	No
Lake and Streambed Alteration Agreement - Department of Fish & Game (CDFG)	Potentially applicable - if cooling tower site area disturbance involves impacts to jurisdictional streambed areas (waters of the state).	1-2 months, (if application complete) Note recent history indicates this could extend to 4 to 6 months.	No	No
Waste Discharge Requirements (WDR) –Central Coast Regional Water Quality Control Board (RWQCB)	Potentially applicable - if cooling tower site area disturbance involves impacts to jurisdictional streambed (waters of the state)	4-6 months	No	No
Section 106 Review – Office of Historic Preservation (OHP)	Potential for Historical Review – part of CEQA review process.	Integral to CEQA review process.	No	No
Notification of Waste Activity - RCRA Hazardous Waste Identification Number (Small Quantity Generator) – Construction Phase - Department of Toxic Substance Control, USEPA, San Luis Obispo County Environment Health Services - California Unified Program Agency	Potentially necessary for construction of the towers, unless current DCPP ID will be used.	1-2 weeks	No	No

Table CC-10.
Environmental Permit/Approval Assessment: Wet Mechanical Draft (Forced) (Fresh and Reclaimed)
Diablo Canyon Power Plant *(cont.)*

Permit/Approval	Assessment	Permit Review Period (Preconstruction)	Critical Path	Fatal Flaw
Notification of Waste Activity - RCRA Hazardous Waste Identification Number (Small Quantity Generator) – Operation - Department of Toxic Substance Control, USEPA, San Luis Obispo County Environmental Health Services - California Unified Program Agency	DCPP likely will continue to be able to continue to use their existing hazardous waste ID number. There will be no impacts to the onsite hazardous treatment facility (oil separation unit).	Not Preconstruction Permit	No	No
SPCC Plan - 40 CFR 112 and Aboveground Petroleum Storage Act – San Luis Obispo Environmental Health Services- California Unified Program Agency and USEPA	DCPP will likely have to modify their existing SPCC plan in response to potential for new aboveground storage tanks of applicable petroleum materials.	1-2 months plan development	No	No
Underground Storage Tank Permit - San Luis Obispo County Environmental Health - California Unified Program Agency and State Water Resources Board	The new cooling towers could force the relocation of underground tanks mandating new permits from the county and revised inspection programs.	1-2 months	No	No
Risk Management Plan (Clean Air Act 112r) – San Luis Obispo County Environmental Health Services - California Unified Program Agency and USEPA	If new volatile chemicals are needed to support MDW cooling tower operation, a Risk Management Plan may be needed to assess the offsite impacts of a release of the subject chemical.	Not a preconstruction requirement.	No	No
Emergency Planning and Community Right-to-Know Act (EPCRA) – 40 CFR 311 & 312 - San Luis Obispo County Environmental Health Services - California Unified Program Agency and USEPA	If new chemicals are stored in quantities that exceed applicable thresholds (e.g., 10,000 lbs for hazardous chemicals, 500 lbs for extremely hazardous chemicals), additional notification reports will need to be sent to the county.	Not a preconstruction requirement	No	No
Land Use Zones/Districts Approval - San Luis Obispo County Department of Planning and Building	The county will likely evaluate consistency of the proposed cooling tower development with the current land use designation.	Dependent of the duration of the CEQA/EIR process (> 1 year).	Potential	Potential
Condition Use Plan Amendment - San Luis Obispo County Department of Planning and Building	A Conditional Use Plan will be issued based on the findings of the CEQA review process.	Dependent of the duration of the CEQA/EIR process (> 1 year).	Potential	Potential

Table CC-10.
Environmental Permit/Approval Assessment: Wet Mechanical Draft (Forced) (Fresh and Reclaimed)
Diablo Canyon Power Plant *(cont.)*

Permit/Approval	Assessment	Permit Review Period (Preconstruction)	Critical Path	Fatal Flaw
Grading Plan Approval or Permit - San Luis Obispo County Department of Public Works & Planning and Building	Grading plan permits will be necessary to support construction.	4-6 weeks –following completion of CEQA and conditional use permit	No	No
Erosion and Sediment Control Plan (Rain Event Action Plan) - San Luis Obispo County Department of Public Works	Similar to construction phase SWPPP. No separate submittal is expected to be directed to the county.	See SWPPP discussion	No	No
Building Permit (including plumbing and electrical) – San Obispo County Building Division	Building permits will be necessary to support construction.	4-6 weeks –following completion of CEQA and conditional use permit	No	No
Domestic Water Supply Permit (public potable water) - San Obispo County Department of Environmental Health	Not applicable – no new potable water systems are planned. The delivery of offsite freshwater to the site is not addressed by this permit.	Not applicable	NA	NA
San Luis Obispo County Well Water Permit - San Luis Obispo County Environmental Health Services	The freshwater supply option could demand the addition of onsite wells.	1 -2 weeks (freshwater supply option)	No	No
California Department of Transportation (Caltrans) – Oversize/Overweight Vehicles	Potentially applicable - if some of the tower elements prove to be oversized.	Not a preconstruction requirement.	No	No
Caltrans Heavy Haul Report (transport and delivery of heavy and oversized loads)	Potentially applicable - if some of the tower elements prove to be oversized.	Not a preconstruction requirement.	No	No
Resource Conservation (RC) Land Use Management Approval	While local municipality rules may supersede this regional land use//watershed protection-related project approval process, this is not the case for DCPP.	1-4 months, if application complete	NA	NA
Temporary Power Pole – Local municipality or San Luis Obispo County Public Works Department	Local power poles may be needed during the course of construction.	Not Preconstruction Approvals	No	No
Fire Safety Plan Approval, Certificate of Occupancy, Flammable Storage – San Luis Obispo County Fire Department	While the addition of MDW towers may require revisions to the existing Fire Safety Plan, the tower system is not expected to include new occupied structures,	1 month for approval of Fire Safety Plan.	No	No
Sewer and Sewer Connections – San Luis Obispo County Environmental Health Services	Not applicable - no new sanitary connections are envisioned.	Not applicable.	NA	NA

Table CC-10.
Environmental Permit/Approval Assessment: Wet Mechanical Draft (Forced) (Fresh and Reclaimed)
Diablo Canyon Power Plant *(cont.)*

Permit/Approval	Assessment	Permit Review Period (Preconstruction)	Critical Path	Fatal Flaw
Road Crossing or Encroachment Permit (Caltrans, San Luis Obispo County)	The freshwater and reclaimed water pipeline routes have not been determined. Encroachment permits and related engineering studies remain a possibility.	1-3 months.	No	No

Table CC-11
Environmental Permit/Approval Assessment: Hybrid Wet/Dry Cooling (Saltwater)
Diablo Canyon Power Plant

Permit/Approval	Assessment	Permit Review Period (Preconstruction)	Critical Path	Fatal Flaw
National Environmental Policy Act – BLM or Other Responsible Lead Federal Agency (Record of Decision, Right of Way)	Not applicable – if Project does not constitute major federal action (federal land, funding). Please note that if NEPA is triggered it could involve a 12-18 month review period.	NA	NA	NA
Section 404/10 Permit – U.S. Army Corps of Engineers (USACE)	Refashioning of the existing intake system for closed-cycle cooling is likely to generate significant impacts to waters of the U.S. and will involve work in navigable waters. Work associated with crossings of Diablo Creek could also represent significant impacts. Individual form of permit will be required	120 days from complete application (goal), actual duration could be much longer.	Potential	No
Section 401 Water Quality Certificate – U.S. Army Corps of Engineers (USACE) & Regional Quality Control Board (RWQCB)	Section 401 permit process will parallel Section 404 permit process.	120 days from complete application (goal) ~12 months (expected)	Potential	No
Nationwide Permit – U.S. Army Corps of Engineers	Not applicable - the refashioning of the existing intake system for closed-cycle cooling will generate significant impacts to waters of the U.S. that cannot be addressed by the Nationwide permitting process.	~12 months (expected)	No	No
Section 7 Consultation with U.S. Fish and Wildlife Service (Endangered Species Act of 1973)	The tower construction will impact unoccupied, potentially undeveloped land that could include grassland and chaparral habitat. Pipelines will cross riparian habitat along Diablo Creek.	Part of CEQA review process	No	No
Notice of Proposed Construction or Alteration – Federal Aviation Administration (FAA)	Not applicable - hybrid wet/dry cooling towers will be less than 200 feet agl threshold for FAA review.	Not applicable	NA	NA
Notice of Proposed Construction or Alteration – FAA	Not applicable - hybrid wet/dry cooling towers will be less than 200 feet agl threshold for FAA review.	Not applicable	NA	NA

Table CC-11
Environmental Permit/Approval Assessment: Hybrid Wet/Dry Cooling (Saltwater)
Diablo Canyon Power Plant *(cont.)*

Permit/Approval	Assessment	Permit Review Period (Preconstruction)	Critical Path	Fatal Flaw
Multiple-Use Class L Limited Land Use Designated Utility Corridor – Bureau of Land Management (BLM) or Other Responsible Federal Agency	Not applicable - the addition of the cooling tower system will not require any additional federal land.	Not applicable	No	No
California Public Utility Commission (CPUC) Approval	CPUC may share the lead agency CEQA responsibilities for the proposed hybrid wet/dry cooling tower technology. The CEQA review process trigger development of a comprehensive EIR.	12 months nominally	Potential	Potential
California Energy Commission (CEC) – Final Decision	Not applicable - this process is only applicable if there is a power capacity (increase) > 50 MW, the threshold for review by the CEC. Hybrid wet/dry cooling tower system will not result in increased power output, so there will be no CEC-sponsored CEQA review or specific permits or approvals.	Not applicable	No	No
Coastal Development Permit - California Coastal Commission/Local Coastal Programs	Applicable for cooling tower development within the coastal zone, which includes all of the DCPP property. While there are no initial fatal flaws with the hybrid wet/dry cooling tower system, the significant construction in the coastal zone could be an issue.	A 3 to 9 month process is advertised, but longer if CEQA review process (CEQA/EIR) is triggered.	Potential	No
Coastal Development Lease – California State Lands Commission and potential California Environmental Quality Act (CEQA) Lead Agency	The State Land Commission will evaluate the expected impacts to marine environment associated with addition of hybrid wet/dry cooling tower system and determine if a Categorical Exemption (unlikely) or Mitigated Negative Declaration applies. These impacts could trigger the Commission to initiate the CEQA/EIR review process.	Dependent of the duration of the CEQA/EIR process (> 1 year).	Potential	No

Table CC-11
Environmental Permit/Approval Assessment: Hybrid Wet/Dry Cooling (Saltwater)
Diablo Canyon Power Plant *(cont.)*

Permit/Approval	Assessment	Permit Review Period (Preconstruction)	Critical Path	Fatal Flaw
Regional Pollution Control District Authority to Construct (ATC) – San Luis Obispo Air Pollution Control District	Major source air permit will be required to account for the significant emission of PM-10 (>100 tons/year). The San Luis Obispo Air Pollution Control District is designated a state non-attainment area for PM-10 and PM-2.5 that will necessitate securing PM-10 emission offsets. Currently, only 31 tons of PM-10 credits are available in this District. Given the improbable case where additional emission offsets can be generated, the lack of sufficient PM-10 offsets will effectively preclude the ability to receive an associated major source air permit to construct.	Permit review process is not expected to be successful.	Potentially	Yes
Regional Control District Permit to Operate (PTO) – San Luis Obispo Air Pollution Control District	.Major source air permit will be required to account for the significant emission of PM-10 (>100 tons/year). The San Luis Obispo Air Pollution Control District is designated a state non-attainment area for PM-10 and PM-2.5 that will necessitate securing PM-10 emission offsets. Currently, only 31 tons of PM-10 credits are available in this District. Given the improbable case where additional emission offsets can be generated, the lack of sufficient PM-10 offsets will effectively preclude the ability to receive an associated major source air permit to construct.	Permit review process is not expected to be successful	No	Yes
Title V Federal Operating Permit –San Luis Obispo Air Pollution Control District and USEPA	A Title V Federal Operating Permit will be needed. The lack of sufficient PM-10 offsets will effectively preclude receipt of this permit.	Permit review process is not expected to be successful	No	Yes
Title IV Acid Rain Permit - USEPA	Not applicable – no major sources of acid rain air pollution	Not applicable	NA	NA
Dust Control Plan – San Luis Obispo Air Pollution Control District	Construction projects that emit particulate matter must comply with PM-10 standards via a Dust Control Plan.	Plans development: 1 month	No	No

Table CC-11
Environmental Permit/Approval Assessment: Hybrid Wet/Dry Cooling (Saltwater)
Diablo Canyon Power Plant *(cont.)*

Permit/Approval	Assessment	Permit Review Period (Preconstruction)	Critical Path	Fatal Flaw
NPDES Industrial Discharge Permit – Central Coast Regional Water Quality Control Board (RWQCB) and State Water Resources Control Board	Changes in the quantity and quality of the cooling system discharge will necessitate a change in the NPDES permit that is based on a once-through system. The water withdrawal and discharge will be significantly decreased, but there will be changes in the water treatment processes (additional biocides and other treatment chemicals). The modification of the current NPDES permit to reflect the hybrid wet/dry cooling tower system is not expected to generate significant issues.	~6 months	No	No
Notice of Intent (NOI) – National Pollutant Discharge Elimination System General Permit for Storm Water Discharges Associated with Construction Activity, Central Coast Regional Water Quality Control Board (RWQCB)	Land disturbances associated with the hybrid wet/dry cooling tower system will substantially exceed the 1 acre threshold level necessitating the submittal of Notice of Intent (NOI) and development of Storm Water Pollution Prevention Plan.	Electronic submittal – 1 week process	No	No
Storm Water Pollution Prevention Plan (SWPPP) – National Pollutant Discharge Elimination System General Permit for Storm Water Discharges Associated with Construction Activity – Central Coast Regional Quality Control Board (RWQCB)	Land disturbances associated with the hybrid wet/dry cooling tower system will substantially exceed the 1 acre threshold level necessitating the submittal of Notice of Intent (NOI) and development of Storm Water Pollution Prevention Plan.	SWPPP development process (3-months)	No	No
Notice of Intent (NOI) – National Pollutant Discharge Elimination System General Permit for Storm Water Discharges Associated with Industrial Activity, Central Coast Regional Water Quality Control Board (RWQCB)	Not applicable - DCPP NPDES permit addresses operational storm water – there is no operational phase Notice of Intent for this facility.	Not applicable	NA	NA
Storm Water Pollution Prevention Plan (SWPPP) – National Pollutant Discharge Elimination System General Permit for Storm Water Discharges Associated with Industrial Activity, Central Coast Regional Quality Control Board (RWQCB)	Not applicable - DCPP NPDES permit addresses operational storm water – there is no separate operational phase SWPPP.	Not applicable	NA	NA

Table CC-11
Environmental Permit/Approval Assessment: Hybrid Wet/Dry Cooling (Saltwater)
Diablo Canyon Power Plant *(cont.)*

Permit/Approval	Assessment	Permit Review Period (Preconstruction)	Critical Path	Fatal Flaw
2081 Permit for California Endangered Species Act of 1984 (Fish & Game Code, §2050 through 2098) – California Department of Fish & Game (CDFG)	Potentially applicable - cooling tower site area will impact undeveloped upland areas that could include grassland and chaparral habitat. There will also be water pipeline crossings of the riparian habitat along Diablo Creek.	Potentially, part of CEQA Review	No	No
Lake and Streambed Alteration Agreement - Department of Fish & Game (CDFG)	Potentially applicable - if cooling tower site area disturbance involves impacts to jurisdictional streambed areas (waters of the state).	1-2 months, (if application complete) Note recent history indicates this could extend to 4 to 6 months.	No	No
Waste Discharge Requirements (WDR) – Central Coast Regional Water Quality Control Board (RWQCB)	Potentially applicable - if cooling tower site area disturbance involves impacts to jurisdictional streambed (waters of the state)	4-6 months	No	No
Section 106 Review – Office of Historic Preservation (OHP)	Potential for Historical Review – part of CEQA review process.	Integral to CEQA review process.	No	No
Notification of Waste Activity - RCRA Hazardous Waste Identification Number (Small Quantity Generator) – Construction Phase - Department of Toxic Substance Control, USEPA, San Luis Obispo County Environment Health Services - California Unified Program Agency	Potentially necessary for construction of the towers, unless current DCPP ID will be used.	1-2 weeks	No	No
Notification of Waste Activity - RCRA Hazardous Waste Identification Number (Small Quantity Generator) – Operation - Department of Toxic Substance Control, USEPA, San Luis Obispo County Environmental Health Services - California Unified Program Agency	DCPP likely will continue to be able to continue to use their existing hazardous waste ID number. There will be no impacts to the onsite hazardous treatment facility (oil separation unit).	Not Preconstruction Permit	No	No

Table CC-11
Environmental Permit/Approval Assessment: Hybrid Wet/Dry Cooling (Saltwater)
Diablo Canyon Power Plant *(cont.)*

Permit/Approval	Assessment	Permit Review Period (Preconstruction)	Critical Path	Fatal Flaw
SPCC Plan - 40 CFR 112 and Aboveground Petroleum Storage Act – San Luis Obispo Environmental Health Services- California Unified Program Agency and USEPA	DCPP will likely have to modify their existing SPCC plan in response to potential for new aboveground storage tanks of applicable petroleum materials.	1-2 months plan development	No	No
Underground Storage Tank Permit - San Luis Obispo County Environmental Health - California Unified Program Agency and State Water Resources Board	The new cooling towers could force the relocation of underground tanks mandating new permits from the county and revised inspection programs.	1-2 months	No	No
Risk Management Plan (Clean Air Act 112r) – San Luis Obispo County Environmental Health Services - California Unified Program Agency and USEPA	If new volatile chemicals are needed to support hybrid wet/dry cooling tower operation, a Risk Management Plan may be needed to assess the offsite impacts of a release of the subject chemical.	Not a preconstruction requirement.	No	No
Emergency Planning and Community Right-to-Know Act (EPCRA) – 40 CFR 311 & 312 - San Luis Obispo County Environmental Health Services - California Unified Program Agency and USEPA	If new chemicals are stored in quantities that exceed applicable thresholds (e.g., 10,000 lbs for hazardous chemicals, 500 lbs for extremely hazardous chemicals), additional notification reports will need to be sent to the county.	Not a preconstruction requirement	No	No
Land Use Zones/Districts Approval - San Luis Obispo County Department of Planning and Building	The county will likely evaluate consistency of the proposed cooling tower development with the current land use designation.	Dependent of the duration of the CEQA/EIR process (> 1 year).	Potential	Potential
Condition Use Plan Amendment - San Luis Obispo County Department of Planning and Building	A Conditional Use Plan will be issued based on the findings of the CEQA review process.	Dependent of the duration of the CEQA/EIR process (> 1 year).	Potential	Potential
Grading Plan Approval or Permit - San Luis Obispo County Department of Public Works & Planning and Building	Grading plan permits will be necessary to support construction.	4-6 weeks –following completion of CEQA and conditional use permit	No	No
Erosion and Sediment Control Plan (Rain Event Action Plan) - San Luis Obispo County Department of Public Works	Similar to construction phase SWPPP. No separate submittal is expected to be directed to the county.	See SWPPP discussion	No	No

Table CC-11
Environmental Permit/Approval Assessment: Hybrid Wet/Dry Cooling (Saltwater)
Diablo Canyon Power Plant *(cont.)*

Permit/Approval	Assessment	Permit Review Period (Preconstruction)	Critical Path	Fatal Flaw
Building Permit (including plumbing and electrical) – San Obispo County Building Division	Building permits will be necessary to support construction.	4-6 weeks –following completion of CEQA and conditional use permit	No	No
Domestic Water Supply Permit (public potable water) - San Obispo County Department of Environmental Health	Not applicable – no new potable water systems are planned.	Not applicable	NA	NA
San Luis Obispo County Well Water Permit - San Luis Obispo County Environmental Health Services	No new wells to be developed will be developed in support of saltwater cooling towers.	Not applicable – saltwater option.	NA	NA
California Department of Transportation (Caltrans) – Oversize/Overweight Vehicles	Potentially applicable - if some of the tower elements prove to be oversized.	Not a preconstruction requirement.	No	No
Caltrans Heavy Haul Report (transport and delivery of heavy and oversized loads)	Potentially applicable - if some of the tower elements prove to be oversized.	Not a preconstruction requirement.	No	No
Resource Conservation (RC) Land Use Management Approval	Not applicable - while local municipality rules may supersede this regional land use//watershed protection-related project approval process, this is not the case for DCPP.	1-4 months, if application complete	NA	NA
Temporary Power Pole – Local municipality or San Luis Obispo County Public Works Department	Local power poles may be needed during the course of construction.	Not a Preconstruction Approvals	No	No
Fire Safety Plan Approval, Certificate of Occupancy, Flammable Storage – San Luis Obispo County Fire Department	While the addition of hybrid wet/dry cooling towers may require revisions to the existing Fire Safety Plan, the tower system is not expected to include new occupied structures,	1 month for approval of Fire Safety Plan.	No	No
Sewer and Sewer Connections – San Luis Obispo County Environmental Health Services	Not applicable - no new sanitary connections are envisioned.	Not applicable.	NA	NA
Road Crossing or Encroachment Permit (Caltrans, San Luis Obispo County)	Not applicable – the addition of the hybrid wet/dry cooling tower system is not expected to pose any road crossing or encroachment issues.	Not applicable.	NA	NA

Table CC-12.
Environmental Permit/Approval Assessment: Hybrid Wet/Dry Cooling (Fresh and Reclaimed Water)
Diablo Canyon Power Plant

Permit/Approval	Assessment	Permit Review Period (Preconstruction)	Critical Path	Fatal Flaw
Permit/Approval	Assessment	Permit Review Period (preconstruction)	Critical Path	Fatal Flaw
National Environmental Policy Act – BLM or Other Responsible Lead Federal Agency (Record of Decision, Right of Way)	Not applicable – if Project does not constitute major federal action (federal land, funding). Please note that if NEPA is triggered it could involve a 12-18 month review period.	Not applicable	NA	NA
Section 404/10 Permit – U.S. Army Corps of Engineers (USACE)	Not applicable – water supply is assumed to be available at the site boundary (no crossing of Diablo Creek). There are no impacts to jurisdictional waters.	Not applicable	NA	NA
Section 401 Water Quality Certificate – U.S. Army Corps of Engineers (USACE) & Regional Quality Control Board (RWQCB)	Not applicable – if the water supply is assumed to be available at the site boundary (no crossing of Diablo Creek). There are no impacts to jurisdictional waters.	Not applicable	NA	NA
Nationwide Permit – U.S. Army Corps of Engineers	Not applicable – if the water supply is assumed to be available at the site boundary (no crossing of Diablo Creek). There are no impacts to jurisdictional waters.	Not applicable	No	No
Section 7 Consultation with U.S. Fish and Wildlife Service (Endangered Species Act of 1973)	The tower construction will impact unoccupied, potentially undeveloped land that could include grassland and chaparral habitat.	Potentially part of CEQA Review	No	No
Notice of Proposed Construction or Alteration – Federal Aviation Administration (FAA)	Not applicable - hybrid wet/dry cooling towers will be less than 200 feet agl threshold for FAA review.	1-2 months	NA	NA
Notice of Proposed Construction or Alteration – FAA	Not applicable - hybrid wet/dry cooling towers will be less than 200 feet agl threshold for FAA review.	1-2 months	NA	NA
Multiple-Use Class L Limited Land Use Designated Utility Corridor – Bureau of Land Management (BLM) or Other Responsible Federal Agency	Not applicable - the addition of the cooling tower system will not require any additional federal land.	Not applicable	No	No

Table CC-12.
Environmental Permit/Approval Assessment: Hybrid Wet/Dry Cooling (Fresh and Reclaimed Water)
Diablo Canyon Power Plant *(cont.)*

Permit/Approval	Assessment	Permit Review Period (Preconstruction)	Critical Path	Fatal Flaw
California Public Utility Commission (CPUC) Approval	CPUC may share the lead agency CEQA responsibilities for the proposed hybrid wet/dry cooling tower technology. The CEQA review process trigger development of a comprehensive EIR.	12 months nominally	Potential	Potential
California Energy Commission (CEC) – Final Decision	Not applicable - this process is only applicable if there is a power capacity (increase) > 50 MW, the threshold for review by the CEC. hybrid wet/dry cooling tower system will not result in increased power output, so there will be no CEC-sponsored CEQA review or specific permits or approvals.	Not applicable	NA	NA
Coastal Development Permit - California Coastal Commission/Local Coastal Programs	Applicable for cooling tower development within the coastal zone, which includes all of the DCPP property. While there are no initial fatal flaws with the hybrid wet/dry cooling tower system, the significant construction in the coastal zone could be an issue.	A 3 to 9 month process is advertised, but longer if CEQA review process (CEQA/EIR) is triggered.	Potential	Potential
Coastal Development Lease – California State Lands Commission and potential California Environmental Quality Act (CEQA) Lead Agency	The State Land Commission will evaluate the expected impacts to marine environment associated with addition of hybrid wet/dry cooling tower system and determine if a Categorical Exemption (unlikely) or Mitigated Negative Declaration applies. These impacts could trigger the Commission to initiate the CEQA/EIR review process.	Dependent of the duration of the CEQA/EIR process (> 1 year).	Potential	No
Regional Pollution Control District Authority to Construct (ATC) – San Luis Obispo Air Pollution Control District	With freshwater and reclaimed water, the hybrid wet/dry cooling towers do not require a major source air permit because of PM-10 emissions (<100 tons/year) and will therefore not require PM-10 emission offsets.	Not applicable	NA	NA
Regional Control District Permit to Operate (PTO) – San Luis Obispo Air Pollution Control District	With freshwater and reclaimed water, the hybrid wet/dry cooling towers do not require a major source air permit because of PM-10 emissions (<100 tons/year) and will therefore not require PM-10 emission offsets.	Not applicable	NA	NA

Table CC-12.
Environmental Permit/Approval Assessment: Hybrid Wet/Dry Cooling (Fresh and Reclaimed Water)
Diablo Canyon Power Plant *(cont.)*

Permit/Approval	Assessment	Permit Review Period (Preconstruction)	Critical Path	Fatal Flaw
Title V Federal Operating Permit – San Luis Obispo Air Pollution Control District and USEPA	Not applicable - a Title V Federal Operating Permit will not be needed for the freshwater or reclaimed water options.	Not applicable	NA	NA
Title IV Acid Rain Permit - USEPA	Not applicable – no major sources of acid rain air pollution	Not applicable	NA	NA
Dust Control Plan – San Luis Obispo Air Pollution Control District	Construction projects that emit particulate matter must comply with PM-10 standards via a Dust Control Plan.	Plans development: 1 month	No	No
NPDES Industrial Discharge Permit – Central Coast Regional Water Quality Control Board (RWQCB) and State Water Resources Control Board	Changes in the quantity and quality of the cooling system discharge will necessitate a change in the NPDES permit, which is based on a once-through system. The water withdrawal from the ocean will be discontinued and the discharge will be significantly decreased. There will be changes in the water treatment processes (additional biocides and other treatment chemicals). The modification of the current NPDES permit to reflect the hybrid wet/dry cooling tower system is not expected to generate significant issues.	~6 months	No	No
Notice of Intent (NOI) – National Pollutant Discharge Elimination System General Permit for Storm Water Discharges Associated with Construction Activity, Central Coast Regional Water Quality Control Board (RWQCB)	Land disturbances associated with the hybrid wet/dry cooling tower system will substantially exceed the 1 acre threshold level necessitating the submittal of Notice of Intent (NOI) and development of Storm Water Pollution Prevention Plan.	Electronic submittal – 1 week process	No	No
Storm Water Pollution Prevention Plan (SWPPP) – National Pollutant Discharge Elimination System General Permit for Storm Water Discharges Associated with Construction Activity –Central Coast Regional Quality Control Board (RWQCB)	Land disturbances associated with the hybrid wet/dry cooling tower system will substantially exceed the 1 acre threshold level necessitating the submittal of Notice of Intent (NOI) and development of Storm Water Pollution Prevention Plan.	SWPPP development process (3-months)	No	No

Table CC-12.
Environmental Permit/Approval Assessment: Hybrid Wet/Dry Cooling (Fresh and Reclaimed Water)
Diablo Canyon Power Plant *(cont.)*

Permit/Approval	Assessment	Permit Review Period (Preconstruction)	Critical Path	Fatal Flaw
Notice of Intent (NOI) – National Pollutant Discharge Elimination System General Permit for Storm Water Discharges Associated with Industrial Activity, Central Coast Regional Water Quality Control Board (RWQCB)	Not applicable - DCPP NPDES permit addresses operational storm water – there is no operational phase Notice of Intent for this facility.	Not applicable	NA	NA
Storm Water Pollution Prevention Plan (SWPPP) – National Pollutant Discharge Elimination System General Permit for Storm Water Discharges Associated with Industrial Activity, Central Coast Regional Quality Control Board (RWQCB)	Not applicable - DCPP NPDES permit addresses operational storm water – there is no separate operational phase SWPPP.	Not applicable	NA	NA
2081 Permit for California Endangered Species Act of 1984 (Fish & Game Code, §2050 through 2098) – California Department of Fish & Game (CDFG)	Not applicable - if eventual cooling tower site area is within a developed or disturbed area.	Potentially, part of CEQA Review	No	No
Lake and Streambed Alteration Agreement - California Department of Fish & Game (CDFG)	Potentially applicable - if cooling tower site area disturbance involves impacts to jurisdictional streambed areas (waters of the state).	1-2 months, (if application complete) Note recent history indicates this could extend to 4 to 6 months.	No	No
Waste Discharge Requirements (WDR) –Central Coast Regional Water Quality Control Board (RWQCB)	Potentially applicable - if cooling tower site area disturbance involves impacts to jurisdictional streambed (waters of the state)	4-6 months	No	No
Section 106 Review – Office of Historic Preservation (OHP)	Potential for Historical Review – part of CEQA review process.	Integral to CEQA review process.	No	No
Notification of Waste Activity - RCRA Hazardous Waste Identification Number (Small Quantity Generator) – Construction Phase - Department of Toxic Substance Control, USEPA, San Luis Obispo County Environment Health Services - California Unified Program Agency	Potentially necessary for construction of the towers, unless current DCPP ID will be used.	1-2 weeks	No	No

Table CC-12.
Environmental Permit/Approval Assessment: Hybrid Wet/Dry Cooling (Fresh and Reclaimed Water)
Diablo Canyon Power Plant *(cont.)*

Permit/Approval	Assessment	Permit Review Period (Preconstruction)	Critical Path	Fatal Flaw
Notification of Waste Activity - RCRA Hazardous Waste Identification Number (Small Quantity Generator) – Operation - Department of Toxic Substance Control, USEPA, San Luis Obispo County Environmental Health Services - California Unified Program Agency	DCPP likely will continue to be able to continue to use their existing hazardous waste ID number. There will be no impacts to the onsite hazardous treatment facility (oil separation unit).	Not Preconstruction Permit	No	No
SPCC Plan - 40 CFR 112 and Aboveground Petroleum Storage Act – San Luis Obispo Environmental Health Services- California Unified Program Agency and USEPA	DCPP will likely have to modify their existing SPCC plan in response to potential for new aboveground storage tanks of applicable petroleum materials.	1-2 months plan development	No	No
Underground Storage Tank Permit - San Luis Obispo County Environmental Health - California Unified Program Agency and State Water Resources Board	The new cooling towers could force the relocation of underground tanks mandating new permits from the county and revised inspection programs.	1-2 months	No	No
Risk Management Plan (Clean Air Act 112r) – San Luis Obispo County Environmental Health Services - California Unified Program Agency and USEPA	If new volatile chemicals are needed to support hybrid wet/dry cooling tower operation, a Risk Management Plan may be needed to assess the offsite impacts of a release of the subject chemical.	Not a preconstruction requirement.	No	No
Emergency Planning and Community Right-to-Know Act (EPCRA) – 40 CFR 311 & 312 - San Luis Obispo County Environmental Health Services - California Unified Program Agency and USEPA	If new chemicals are stored in quantities that exceed applicable thresholds (e.g., 10,000 lbs for hazardous chemicals, 500 lbs for extremely hazardous chemicals), additional notification reports will need to be sent to the county.	Not a preconstruction requirement	No	No
Land Use Zones/Districts Approval - San Luis Obispo County Department of Planning and Building	The county will likely evaluate consistency of the proposed cooling tower development with the current land use designation.	Dependent of the duration of the CEQA/EIR process (> 1 year).	Potential	Potential
Condition Use Plan Amendment - San Luis Obispo County Department of Planning and Building	A Conditional Use Plan will be issued based on the findings of the CEQA review process.	Dependent of the duration of the CEQA/EIR process (> 1 year).	Potential	Potential

Table CC-12.
Environmental Permit/Approval Assessment: Hybrid Wet/Dry Cooling (Fresh and Reclaimed Water)
Diablo Canyon Power Plant *(cont.)*

Permit/Approval	Assessment	Permit Review Period (Preconstruction)	Critical Path	Fatal Flaw
Grading Plan Approval or Permit - San Luis Obispo County Department of Public Works & Planning and Building	Grading plan permits will be necessary to support construction.	4-6 weeks –following completion of CEQA and conditional use permit	No	No
Erosion and Sediment Control Plan (Rain Event Action Plan) - San Luis Obispo County Department of Public Works	Similar to construction phase SWPPP. No separate submittal is expected to be directed to the county.	See SWPPP discussion	No	No
Building Permit (including plumbing and electrical) – San Obispo County Building Division	Building permits will be necessary to support construction.	4-6 weeks –following completion of CEQA and conditional use permit	No	No
Domestic Water Supply Permit (public potable water) - San Obispo County Department of Environmental Health	Not applicable – no new potable water systems are planned. The delivery of offsite freshwater to the site is not addressed by this permit.	Not applicable	NA	NA
San Luis Obispo County Well Water Permit - San Luis Obispo County Environmental Health Services	The freshwater supply option could demand the addition of onsite wells.	1 -2 weeks (freshwater supply option)	No	No
California Department of Transportation (Caltrans) – Oversize/Overweight Vehicles	Potentially applicable - if some of the tower elements prove to be oversized.	Not a preconstruction requirement.	No	No
Caltrans Heavy Haul Report (transport and delivery of heavy and oversized loads)	Potentially applicable - if some of the tower elements prove to be oversized.	Not a preconstruction requirement.	No	No
Resource Conservation (RC) Land Use Management Approval	While local municipality rules may supersede this regional land use//watershed protection-related project approval process, this is not the case for DCPP.	1-4 months, if application complete	NA	NA
Temporary Power Pole – Local municipality or San Luis Obispo County Public Works Department	Local power poles may be needed during the course of construction.	Not Preconstruction Approvals	No	No
Fire Safety Plan Approval, Certificate of Occupancy, Flammable Storage – San Luis Obispo County Fire Department	While the addition of hybrid wet/dry cooling towers may require revisions to the existing Fire Safety Plan, the tower system is not expected to include new occupied structures,	1 month for approval of Fire Safety Plan.	No	No
Sewer and Sewer Connections – San Luis Obispo County Environmental Health Services	Not applicable - no new sanitary connections are envisioned.	Not applicable	NA	NA

Table CC-12.
Environmental Permit/Approval Assessment: Hybrid Wet/Dry Cooling (Fresh and Reclaimed Water)
Diablo Canyon Power Plant *(cont.)*

Permit/Approval	Assessment	Permit Review Period (Preconstruction)	Critical Path	Fatal Flaw
Road Crossing or Encroachment Permit (Caltrans, San Luis Obispo County)	The freshwater and reclaimed water pipeline routes have not been determined. Encroachment permits and related engineering studies remain a possibility.	1-3 months.	No	No

Table CC-13.
Offsetting Impacts for Passive Draft Dry/Air Cooling
Diablo Canyon Power Plant

Category	Impacts – Construction	Impacts – Operations	Magnitude	Construction Impact Significance	Operation Impact Significance
Air	Increase in greenhouse gases, NOx, volatile organic compound, CO, and particulate matter from construction equipment, material deliveries, and commuting workforce. Fugitive dust emissions from land disturbance and potential concrete batch plant.	Increased greenhouse gas emissions from replacement fossil-fuel generation to offset the short term loss of DCPP generation during the associated plant outages and the ongoing decreases DCPP output from associated auxiliary loads and reduced thermal efficiency. There are no drift losses or condensed plume from operation of this system. Consequently, there are no particulate emissions (salt) or related impacts.	Small temporary increase in CO_2 greenhouse gas emissions from temporary increase in commuting traffic during associated plant outage.	Small Negative	Small Negative
Surface Water	Increased potential for soil erosion and sedimentation as well as other storm water contamination threats from material storage, handling and related spills. Construction activities will have the potential to generate turbidity impacts from disruption of near-shore habitats near the intake where some marine work will be pursued.	Saltwater - significantly reduced seawater withdrawals, reduced thermal impacts (lower temperature, reduced flow), and increased residual biocides in the cooling system. Fresh and Reclaimed Water - an increase in residual biocides in the cooling system discharge. This involves an industrial use of an otherwise potable water source and a wastewater.		Small Negative	Small Positive (saltwater, reclaimed water) Small Negative (freshwater)

Table CC-13.
Offsetting Impacts for Passive Draft Dry/Air Cooling
Diablo Canyon Power Plant *(cont.)*

Category	Impacts – Construction	Impacts – Operations	Magnitude	Construction Impact Significance	Operation Impact Significance
Groundwater	Additional groundwater resources could be used to satisfy increase freshwater construction water demands (compaction, dust control, concrete).	Onsite groundwater resources will not be used in support of saltwater PDD tower operation. Groundwater could be used to satisfy or contribute to the operational water needs of the freshwater PDD towers or used to supplement the water needs of the reclaimed water cooling tower system.	Minimal for dry technologies	Small Negative	Small Positive (saltwater) Moderate Negative (freshwater and reclaimed water)
Marine Ecological Resources	Saltwater - new localized disruptions to inshore marine habitat from installation of new inshore intake system. Fresh and Reclaimed Water – no impacts to marine resources.	Permanent lost of inshore marine habitat. Saltwater - reduced impingement and entrainment from reduced water withdrawals (+95% reduction in withdrawals, influent velocity < 0.5 fps and reduced and appropriate screening). Freshwater and Reclaimed Water – no seawater withdrawals, so no impingement or entrapment impacts to marine life.	Loss of acres of 0.35 acres of sub-tidal habitat. (Enercon, 2009)	Small Negative (saltwater) None (fresh and reclaimed water)	Large Positive
Waste	Increased generation of demolition and construction-related wastes. There will be significant earthwork – soil material balance to be developed in later assessment.	Increased generation of wastes from cooling tower maintenance activities and collection of wastes from the modified inshore intake system.	Earthwork material balance pending later assessment phase. See Section 4.8 for estimated excavation requirements.	Moderate Negative	Small Negative

Table CC-13.
Offsetting Impacts for Passive Draft Dry/Air Cooling
Diablo Canyon Power Plant *(cont.)*

Category	Impacts – Construction	Impacts – Operations	Magnitude	Construction Impact Significance	Operation Impact Significance
Noise	Increased noise from construction activities associated with development of the cooling tower installation and associated intake modifications.	Increased noise from operation of the cooling tower system (pump, and motor noise). Impacts to distant public are unlikely.	Construction activities and operation of the PDD cooling cycle system will not result in an exceedance of the local noise criteria (nominally 70 dBa at nearest public noise receptor).	Small Negative	None
Land Use	Construction activities will be occurring on previously occupied, undeveloped or undisturbed land and require expansion of the current site boundaries. Some marine work will be necessary to modify the inshore portions of the existing intake system.	Significant re-purposing of previously occupied, undeveloped or undisturbed land for industrial purposes and the expansion of the DCPP property boundary.	See Section 4.8 for estimated construction and excavation areas.	Large Negative	Large Negative
Terrestrial Ecological Resources	Construction will be confined to the largely undeveloped area with some habitat value north of the power block area, but also involve crossing a more sensitive and valuable riparian habitat along Diablo Creek.	The tower system is will result in some permanent loss of modest upland habitats and some permanent impacts to small portions of the riparian habitat along Diablo Creek.	See Section 4.8 for estimated construction and excavation areas.	Moderate Negative	Moderate Negative
Cultural & Paleontological Resources	Limited to potential for discovery of new cultural or paleontological resources during construction in the largely undeveloped area north of the power block area and in the expected pipeline crossings of the Diablo Creek.	Permanent loss of upland areas with limited potential for cultural and paleontological resources.	N/A	Small Negative	Small Negative

Table CC-13.
Offsetting Impacts for Passive Draft Dry/Air Cooling
Diablo Canyon Power Plant *(cont.)*

Category	Impacts – Construction	Impacts – Operations	Magnitude	Construction Impact Significance	Operation Impact Significance
Visual Resources	The construction efforts for the tall PDD cooling system will still be very visible on the elevated terrain north of the power block area.	Even without a visible plume, the tall PDD cooling system will be very visible on the elevated terrain north of the power block area.	See Section 3 for description of technology, including heights	Large Negative	Large Negative
Transportation	Increased traffic from the construction workforce will worsen the existing level of service on local roads.	There will be no condensed plume and so additional fogging or icing impacts.	N/A	Small Negative	None
Socioeconomic	While there will be construction-related employment opportunities, these opportunities are not expected to significantly strain local community resources (for example, housing, school, fire/police services, water/sewer).	Maintenance staff levels may increase to address cooling tower system operation.	See Section 4.9	Small Positive	None

Notes: Levels of Impact of Significance

Small: Environmental effects are not detectable or are minor, such that they will not noticeably alter any important attribute of the resource

Moderate: Environmental effects are sufficient to noticeably alter, but not significantly change the attributes of the resource.

Large: Environmental effects are clearly noticeable and are sufficient to change the attributes of the resource.

Table CC-14.
Offsetting Impacts for Mechanical (Forced) Draft Dry/Air Cooling
Diablo Canyon Power Plant

Category	Impacts – Construction	Impacts – Operations	Magnitude	Construction Impact Significance	Operation Impact Significance
Air	Increase in greenhouse gas, NOx, volatile organic compound, CO, and particulate matter from construction equipment, material deliveries, and commuting workforce. Fugitive dust emissions from land disturbance and potential concrete batch plant.	Increased greenhouse gas emissions from replacement fossil-fuel generation to offset the short term loss of DCPP generation during the associated plant outages and the ongoing decreases DCPP output from associated auxiliary loads and reduced thermal efficiency. There are no drift losses or condensed plume from operation of this system. Consequently, there are no particulate emissions (salt) or related impacts.	Small temporary increase in CO_2 greenhouse gas emissions from temporary increase in commuting traffic during associated plant outage.	Small Negative	Small Negative
Surface Water	Increased potential for soil erosion and sedimentation as well as other storm water contamination threats from material storage, handling and related spills. Construction activities will have the potential to generate turbidity impacts from disruption of near-shore habitats near the intake where some marine work will be pursued.	Saltwater - significantly reduced seawater withdrawals, reduced thermal impacts (lower temperature, reduced flow), and increased residual biocides in the cooling system. Fresh and Reclaimed Water - an increase in residual biocides in the cooling system discharge. This involves an industrial use of an otherwise potable water source and a wastewater.		Small Negative	Small Positive (saltwater, reclaimed water) Small Negative (freshwater)

Table CC-14.
Offsetting Impacts for Mechanical (Forced) Draft Dry/Air Cooling
Diablo Canyon Power Plant *(cont.)*

Category	Impacts – Construction	Impacts – Operations	Magnitude	Construction Impact Significance	Operation Impact Significance
Groundwater	Additional groundwater resources could be used to satisfy increase freshwater construction water demands (compaction, dust control, concrete).	Onsite groundwater resources will not be used in support of saltwater MDD tower operation. Groundwater could be used to satisfy or contribute to the operational water needs of the freshwater MDD towers or used to supplement the water needs of the reclaimed water cooling tower system.	Minimal for dry technologies	Small Negative	Small Positive (saltwater) Moderate Negative (freshwater and reclaimed water)
Marine Ecological Resources	Saltwater - new localized disruptions to inshore marine habitat from installation of new inshore intake system. Fresh and Reclaimed Water – no impacts to marine resources.	Permanent lost of inshore marine habitat. Saltwater - reduced impingement and entrainment from reduced water withdrawals (+95% reduction in withdrawals, influent velocity < 0.5 fps and reduced and appropriate screening). Freshwater and Reclaimed Water – no seawater withdrawals, so no impingement or entrapment impacts to marine life.	Loss of acres of 0.35 acres of sub-tidal habitat. (Enercon, 2009)	Small Negative (saltwater) None (fresh and reclaimed water)	Large Positive
Waste	Increased generation of demolition and construction-related wastes. There will be significant earthwork – soil material balance to be developed in later assessment.	Increased generation of wastes from cooling tower maintenance activities and collection of wastes from the modified inshore intake system.	Earthwork material balance pending later assessment phase. See Section 4.8 for estimated excavation requirements.	Moderate Negative	Small Negative

Table CC-14.
Offsetting Impacts for Mechanical (Forced) Draft Dry/Air Cooling
Diablo Canyon Power Plant *(cont.)*

Category	Impacts – Construction	Impacts – Operations	Magnitude	Construction Impact Significance	Operation Impact Significance
Noise	Increased noise from construction activities associated with development of the cooling tower installation and associated intake modifications.	Increased noise from operation of the cooling tower system (fan, pump, and motor noise). Impacts to distant public unlikely.	Construction activities and operation of the MDD cooling cycle system will not result in an exceedance of the local noise criteria (nominally 70 dBa at nearest public noise receptor).	Small Negative	None
Land Use	Construction activities will be occurring on previously occupied, undeveloped or undisturbed land and require expansion of the current site boundaries. Some marine work will be necessary to modify the inshore portions of the existing intake system.	Significant re-purposing of previously occupied, undeveloped or undisturbed land for industrial purposes and the expansion of the DCPP property boundary.	See Section 4.8 for estimated construction and excavation areas.	Large Negative	Large Negative
Terrestrial Ecological Resources	Construction will be confined to the largely undeveloped area with some habitat value north of the power block area, but also involve crossing a more sensitive and valuable riparian habitat along Diablo Creek.	The tower system is will result in some permanent loss of modest upland habitats and some permanent impacts to small portions of the riparian habitat along Diablo Creek.	See Section 4.8 for estimated construction and excavation areas.	Moderate Negative	Moderate Negative
Cultural & Paleontological Resources	Limited to potential for discovery of new cultural or paleontological resources during construction in the largely undeveloped area north of the power block area and in the expected pipeline crossings of the Diablo Creek.	Permanent loss of upland areas with limited potential for cultural and paleontological resources.	N/A	Small Negative	Small Negative

Table CC-14.
Offsetting Impacts for Mechanical (Forced) Draft Dry/Air Cooling
Diablo Canyon Power Plant *(cont.)*

Category	Impacts – Construction	Impacts – Operations	Magnitude	Construction Impact Significance	Operation Impact Significance
Visual Resources	The construction efforts for the relatively low profile MDD cooling system will still be very visible on the elevated terrain north of the power block area.	Even without a visible plume, the MDD cooling system will be very visible on the elevated terrain north of the power block area.	See Section 3 for description of technology, including heights	Moderate Negative	Moderate Negative
Transportation	Increased traffic from the construction workforce will worsen the existing level of service on local roads.	There will be no condensed plume and so additional fogging or icing impacts.	See Section 4.8 for estimated construction duration.	Small Negative	None
Socioeconomic	While there will be construction-related employment opportunities, these opportunities are not expected to significantly strain local community resources (for example, housing, school, fire/police services, water/sewer).	Maintenance staff levels may increase to address cooling tower system operation.	See Section 4.9	Small Positive	None

Notes: Levels of Impact of Significance

Small: Environmental effects are not detectable or are minor, such that they will not noticeably alter any important attribute of the resource

Moderate: Environmental effects are sufficient to noticeably alter, but not significantly change the attributes of the resource.

Large: Environmental effects are clearly noticeable and are sufficient to change the attributes of the resource.

Table CC-15.
Offsetting Impacts for Wet Natural Draft
Diablo Canyon Power Plant

Category	Impacts – Construction	Impacts – Operations	Magnitude	Construction Impact Significance	Operation Impact Significance
Air	Increase in greenhouse gases, NOx, VOC, CO, and PM from construction equipment, material deliveries, and commuting workforce. Fugitive dust emissions from land disturbance and potential concrete batch plant.	Increased greenhouse gas emissions from replacement fossil-fuel generation to offset the short term loss of DCPP generation during the associated plant outages and the ongoing decreases DCPP output from associated auxiliary loads and reduced thermal efficiency. Saltwater - Increased salt deposition from cooling tower drift emissions will impact offsite salt-sensitive vegetation and increase onsite equipment corrosion potential. There will be increased VOC emissions from supplemental corrosion control measures (resurfacing/painting). The salt emissions could pose visibility impacts on sensitive Class I areas in Southern California. Fresh and Reclaimed Water: Some salt deposition from cooling tower drift emissions. Onsite corrosion and Class I visibility should not be an issue.	Small temporary increase in CO_2 greenhouse gas emissions from temporary increase in commuting traffic during associated plant outage. Additional 10,318,500 tons of CO_2 greenhouse gas emissions from associated plant outages. (Enercon, 2009) Additional 180, 500 tons/year of CO_2 greenhouse gas emissions from unit from reduced plant efficiency. (Enercon, 2009) Additional 992 tons/year of PM-10 from cooling systems. (Enercon, 2009) Additional +500 tons of VOC from painting and refinishing operations. (Enercon, 2009)	Small Negative	Large Negative (saltwater) Small Negative (fresh and reclaimed water)

Table CC-15.
Offsetting Impacts for Wet Natural Draft
Diablo Canyon Power Plant *(cont.)*

Category	Impacts – Construction	Impacts – Operations	Magnitude	Construction Impact Significance	Operation Impact Significance
Surface Water	Increased potential for soil erosion and sedimentation as well as other storm water contamination threats from material storage, handling and related spills. Construction activities will have the potential to generate turbidity impacts from disruption of near-shore habitats near the intake where some marine work will be pursued.	Saltwater - significantly reduced seawater withdrawals, reduced thermal discharge impacts (lower temperature, reduced flow), and increased salinity and residual biocides in the cooling system discharge. Fresh and Reclaimed Water - decrease in salinity and an increase in residual biocides in the cooling system discharge. This involves an industrial use of an otherwise potable water source and a wastewater.	Velocity and flow characterization (pending later assessment)	Small Negative	Small Positive (saltwater, reclaimed water) Small Negative (freshwater)
Groundwater	Additional groundwater resources could be used to satisfy increase freshwater construction water demands (compaction, dust control, concrete).	Onsite groundwater resources will not be used in support of saltwater NDW tower operation. Groundwater could be used to satisfy or contribute to the operational water needs of the freshwater NDW towers or used to supplement the water needs of the reclaimed water cooling tower system.	See Section 3 for description of technology, including quantification of makeup requirements.	Small Negative	Small Positive (saltwater) Moderate Negative (freshwater and reclaimed water)

Table CC-15.
Offsetting Impacts for Wet Natural Draft
Diablo Canyon Power Plant *(cont.)*

Category	Impacts – Construction	Impacts – Operations	Magnitude	Construction Impact Significance	Operation Impact Significance
Marine Ecological Resources	Saltwater - new localized disruptions to inshore marine habitat from installation of new inshore intake system. Fresh and Reclaimed Water – no impacts to marine resources.	Permanent lost of inshore marine habitat. Saltwater - reduced impingement and entrainment from reduced water withdrawals (90-95% reduction in withdrawals, influent velocity < 0.5 fps and reduced and appropriate screening). Freshwater and Reclaimed Water – no seawater withdrawals, so no impingement or entrapment impacts to marine life.	Loss of acres of 0.35 acres of sub-tidal habitat. (Enercon, 2009)	Small Negative (saltwater) None (fresh and reclaimed water)	Large Positive
Waste	Increased generation of demolition and construction-related wastes. There will be significant earthwork – soil material balance to be developed in later assessment.	Increased generation of wastes from cooling tower maintenance activities and collection of wastes from the modified inshore intake system.	Earthwork material balance pending later assessment phase. Generation of 3,600 yd^3 of construction wastes to landfill. (Enercon, 2009)	Moderate Negative	Small Negative
Noise	Increased noise from construction activities associated with development of the cooling tower installation and associated intake modifications.	Increased noise from operation of the cooling tower system (cascading water, pump, and motor noise). Impacts to distant public unlikely.	Construction activities and operation of the NDW cycle system will not result in an exceedance of the local noise criteria (nominally 70 dBa at nearest public noise receptor).	Small Negative	None

Table CC-15.
Offsetting Impacts for Wet Natural Draft
Diablo Canyon Power Plant *(cont.)*

Category	Impacts – Construction	Impacts – Operations	Magnitude	Construction Impact Significance	Operation Impact Significance
Land Use	Construction activities will be occurring on previously occupied, undeveloped or undisturbed land. Some marine work will be necessary to modify the inshore portions of the existing intake system.	Significant re-purposing of previously occupied, undeveloped or undisturbed land for industrial purposes.	See Section 4.8 for estimated construction and excavation areas.	Moderate Negative	Moderate Negative
Terrestrial Ecological Resources	Construction will be confined to the largely undeveloped area with some habitat value north of the power block area, but also involve crossing a more sensitive and valuable riparian habitat along Diablo Creek.	The tower system is will result in some permanent loss of modest upland habitats and some permanent impacts to small portions of the riparian habitat along Diablo Creek.	See Section 4.8 for estimated construction and excavation areas.	Moderate Negative	Moderate Negative
Cultural & Paleontological Resources	Limited to potential for discovery of new cultural or paleontological resources during construction in the largely undeveloped area north of the power block area and in the expected pipeline crossings of the Diablo Creek.	Permanent loss of upland areas with limited potential for cultural and paleontological resources. Increased salt deposition from the saltwater tower operation may accelerate decay of local surface resources.	Salt deposition 916 ton/year on surrounding lands (Tetra Tech) from saltwater tower.	Small Negative	Small Negative
Visual Resources	New temporary visual impact to local areas from construction cranes and other high profile construction equipment.	Generation of significant visual impacts from tall cooling tower structures (550 feet) and the associated plumes, including possible impacts to local aviation.	Plume length > 5 miles Plume height > 2500 feet Plume visibility – 300 events/year for (Enercon, 2009)	Moderate Negative	Large Negative
Transportation	Increased traffic from the construction workforce will worsen the existing level of service on local roads.	Increased hours of local fogging and icing on local roads and impacts to local aviation.	See Section 4.8 for estimated construction duration. Detailed analysis of fogging and icing severity pending later assessment phase.	Small Negative	Moderate Negative

Table CC-15.
Offsetting Impacts for Wet Natural Draft
Diablo Canyon Power Plant *(cont.)*

Category	Impacts – Construction	Impacts – Operations	Magnitude	Construction Impact Significance	Operation Impact Significance
Socioeconomic	While there will be construction-related employment opportunities, these opportunities are not expected to significantly strain local community resources (e.g., housing, school, fire/police services, water/sewer).	Maintenance staff levels may increase to address cooling tower system operation and corrosion mitigation (for the salt tower system).	See Section 4.9	Small Positive	None

Notes: Levels of Impact of Significance

Small: Environmental effects are not detectable or are minor, such that they will not noticeably alter any important attribute of the resource

Moderate: Environmental effects are sufficient to noticeably alter, but not significantly change the attributes of the resource.

Large: Environmental effects are clearly noticeable and are sufficient to change the attributes of the resource.

Table CC-16.
Offsetting Impacts for Wet Mechanical Dry (Forced)
Diablo Canyon Power Plant

Category	Impacts – Construction	Impacts – Operations	Magnitude	Construction Impact Significance	Operation Impact Significance
Air	Increase in greenhouse gases, NOx, VOC, CO, and PM from construction equipment, material deliveries, and commuting workforce. Fugitive dust emissions from land disturbance and potential concrete batch plant.	Increased greenhouse gas emissions from replacement fossil-fuel generation to offset the short term loss of DCPP generation during the associated plant outages and the ongoing decreases DCPP output from associated auxiliary loads and reduced thermal efficiency. Saltwater - Increased salt deposition from cooling tower drift emissions will impact offsite salt-sensitive vegetation and increase onsite equipment corrosion potential. There will be increased VOC emissions from supplemental corrosion control measures (resurfacing/painting). The salt emissions could pose visibility impacts on sensitive Class I areas in Southern California. Fresh and Reclaimed Water: Some salt deposition from cooling tower drift emissions. Onsite corrosion and Class I visibility should not be an issue.	Small temporary increase in CO_2 greenhouse gas emissions from temporary increase in commuting traffic during associated plant outage. Additional 10,318,500 tons of CO_2 greenhouse gas emissions from associated plant outages. (Enercon, 2009) Additional 180, 500 tons/year of CO_2 greenhouse gas emissions from unit from reduced plant efficiency. (Enercon, 2009) Additional 992 tons/year of PM-10 from cooling systems. (Enercon, 2009) Additional +500 tons of VOC from painting and refinishing operations. (Enercon, 2009)	Small Negative	Large Negative (saltwater) Small Negative (fresh and reclaimed water)

Table CC-16.
Offsetting Impacts for Wet Mechanical Dry (Forced)
Diablo Canyon Power Plant *(cont.)*

Category	Impacts – Construction	Impacts – Operations	Magnitude	Construction Impact Significance	Operation Impact Significance
Surface Water	Increased potential for soil erosion and sedimentation as well as other storm water contamination threats from material storage, handling and related spills. Construction activities will have the potential to generate turbidity impacts from disruption of near-shore habitats near the intake where some marine work will be pursued.	Saltwater - significantly reduced seawater withdrawals, reduced thermal discharge impacts (lower temperature, reduced flow), and increased salinity and residual biocides in the cooling system discharge. Fresh and Reclaimed Water - decrease in salinity and an increase in residual biocides in the cooling system discharge. This involves an industrial use of an otherwise potable water source and a wastewater.	Velocity and flow characterization (pending later assessment)	Small Negative	Small Positive (saltwater, reclaimed water) Small Negative (freshwater)
Groundwater	Additional groundwater resources could be used to satisfy increase freshwater construction water demands (compaction, dust control, concrete).	Onsite groundwater resources will not be used in support of saltwater MDW tower operation. Groundwater could be used to satisfy or contribute to the operational water needs of the freshwater MDW towers or used to supplement the water needs of the reclaimed water cooling tower system.	See Section 3 for description of technology, including quantification of makeup requirements.	Small Negative	Small Positive (saltwater) Moderate Negative (freshwater and reclaimed water)

Table CC-16.
Offsetting Impacts for Wet Mechanical Dry (Forced)
Diablo Canyon Power Plant *(cont.)*

Category	Impacts – Construction	Impacts – Operations	Magnitude	Construction Impact Significance	Operation Impact Significance
Marine Ecological Resources	Saltwater - new localized disruptions to inshore marine habitat from installation of new inshore intake system. Fresh and Reclaimed Water – no impacts to marine resources.	Permanent lost of inshore marine habitat. Saltwater - reduced impingement and entrainment from reduced water withdrawals (90-95% reduction in withdrawals, influent velocity < 0.5 fps second and reduced and appropriate screening). Freshwater and Reclaimed Water – no seawater withdrawals, so no impingement or entrapment impacts to marine life.	Loss of acres of 0.35 acres of sub-tidal habitat. (Enercon, 2009)	Small Negative (saltwater) None (fresh and reclaimed water)	Large Positive
Waste	Increased generation of demolition and construction-related wastes. There will be significant earthwork – soil material balance to be developed in later assessment.	Increased generation of wastes from cooling tower maintenance activities and collection of wastes from the modified inshore intake system.	Earthwork material balance pending later assessment phase. Generation of 3,600 yd^3 of construction wastes to landfill. (Enercon, 2009)	Moderate Negative	Small Negative
Noise	Increased noise from construction activities associated with development of the cooling tower installation and associated intake modifications.	Increased noise from operation of the cooling tower system (cascading water,fans, pump, and motor noise). Impacts to distant public unlikely.	Construction activities and operation of the NDW cycle system will not result in an exceedance of the local noise criteria (nominally 70 dBa at nearest public noise receptor).	Small Negative	None

Table CC-16.
Offsetting Impacts for Wet Mechanical Dry (Forced)
Diablo Canyon Power Plant *(cont.)*

Category	Impacts – Construction	Impacts – Operations	Magnitude	Construction Impact Significance	Operation Impact Significance
Land Use	Construction activities will be occurring on previously occupied, undeveloped or undisturbed land. Some marine work will be necessary to modify the inshore portions of the existing intake system.	Significant re-purposing of previously occupied, undeveloped or undisturbed land for industrial purposes.	See Section 4.8 for estimated construction and excavation areas.	Moderate Negative	Moderate Negative
Terrestrial Ecological Resources	Construction will be confined to the largely undeveloped area with some habitat value north of the power block area, but also involve crossing a more sensitive and valuable riparian habitat along Diablo Creek.	The tower system is will result in some permanent loss of modest upland habitats and some permanent impacts to small portions of the riparian habitat along Diablo Creek.	See Section 4.8 for estimated construction and excavation areas.	Moderate Negative	Moderate Negative
Cultural & Paleontological Resources	Limited to potential for discovery of new cultural or paleontological resources during construction in the largely undeveloped area north of the power block area and in the expected pipeline crossings of the Diablo Creek.	Permanent loss of upland areas with limited potential for cultural and paleontological resources. Increased salt deposition from the saltwater tower operation may accelerate decay of local surface resources.	Salt deposition 916 ton/year on surrounding lands (Tetra Tech) from saltwater tower.	Small Negative	Small Negative
Visual Resources	The construction efforts for the relatively low profile MDW cooling towers will still be very visible on the elevated terrain north of the power block area.	Generation of significant visual impacts from cooling tower plumes from relatively low profile structures.	Plume length > 5 miles Plume height > 2500 feet Plume visibility – 300 events/year for (Enercon, 2009)	Moderate Negative	Large Negative

Table CC-16.
Offsetting Impacts for Wet Mechanical Dry (Forced)
Diablo Canyon Power Plant *(cont.)*

Category	Impacts – Construction	Impacts – Operations	Magnitude	Construction Impact Significance	Operation Impact Significance
Transportation	Increased traffic from the construction workforce will worsen the existing level of service on local roads.	Increased hours of local fogging and icing on local roads and impacts to local aviation.	See Section 4.8 for estimated construction duration. Detailed analysis of fogging and icing severity pending later assessment phase.	Small Negative	Moderate Negative
Socioeconomic	While there will be construction-related employment opportunities, these opportunities are not expected to significantly strain local community resources (e.g., housing, school, fire/police services, water/sewer).	Maintenance staff levels may increase to address cooling tower system operation and corrosion mitigation (for the salt tower system).	See Section 4.9	Small Positive	None

Notes: Levels of Impact of Significance

Small: Environmental effects are not detectable or are minor, such that they will not noticeably alter any important attribute of the resource

Moderate: Environmental effects are sufficient to noticeably alter, but not significantly change the attributes of the resource.

Large: Environmental effects are clearly noticeable and are sufficient to change the attributes of the resource.

Table CC-17.
Offsetting Impacts for Hybrid Wet/Dry Cooling
Diablo Canyon Power Plant

Category	Impacts – Construction	Impacts – Operations	Magnitude	Construction Impact Significance	Operation Impact Significance
Air	Increase in greenhouse gases, NOx, VOC, CO, and PM from construction equipment, material deliveries, and commuting workforce. Fugitive dust emissions from land disturbance and potential concrete batch plant.	Increased greenhouse gas emissions from replacement fossil-fuel generation to offset the short term loss of DCPP generation during the associated plant outages and the ongoing decreases DCPP output from associated auxiliary loads and reduced thermal efficiency. Saltwater - Increased salt deposition from cooling tower drift emissions will impact offsite salt-sensitive vegetation and increase onsite equipment corrosion potential. There will be increased VOC emissions from supplemental corrosion control measures (resurfacing/painting). The salt emissions could pose visibility impacts on sensitive Class I areas in Southern California. Fresh and Reclaimed Water: Some salt deposition from cooling tower drift emissions. Onsite corrosion and Class I visibility should not be an issue.	Small temporary increase in CO_2 greenhouse gas emissions from temporary increase in commuting traffic during associated plant outage. Additional 10,318,500 tons of CO_2 greenhouse gas emissions from associated plant outages. (Enercon, 2009) Additional 180, 500 tons/year of CO_2 greenhouse gas emissions from unit from reduced plant efficiency. (Enercon, 2009) Additional 992 tons/year of PM-10 from cooling systems. (Enercon, 2009) Additional +500 tons of VOC from painting and refinishing operations. (Enercon, 2009)	Small Negative	Large Negative (saltwater) Small Negative (fresh and reclaimed water)

Table CC-17.
Offsetting Impacts for Hybrid Wet/Dry Cooling
Diablo Canyon Power Plant *(cont.)*

Category	Impacts – Construction	Impacts – Operations	Magnitude	Construction Impact Significance	Operation Impact Significance
Surface Water	Increased potential for soil erosion and sedimentation as well as other storm water contamination threats from material storage, handling and related spills. Construction activities will have the potential to generate turbidity impacts from disruption of near-shore habitats near the intake where some marine work will be pursued.	Saltwater - significantly reduced seawater withdrawals, reduced thermal discharge impacts (lower temperature, reduced flow), and increased salinity and residual biocides in the cooling system discharge. Fresh and Reclaimed Water - decrease in salinity and an increase in residual biocides in the cooling system discharge. This involves an industrial use of an otherwise potable water source and a wastewater.	Velocity and flow characterization (pending later assessment)	Small Negative	Small Positive (saltwater, reclaimed water) Small Negative (freshwater)
Groundwater	Additional groundwater resources could be used to satisfy increase freshwater construction water demands (compaction, dust control, concrete).	Onsite groundwater resources will not be used in support of saltwater hybrid wet/dry cooling tower operation. Groundwater could be used to satisfy or contribute to the operational water needs of the freshwater hybrid wet/dry cooling towers or used to supplement the water needs of the reclaimed water cooling tower system.	See Section 3 for description of technology, including quantification of makeup requirements.	Small Negative	None (saltwater) Moderate Negative (freshwater and reclaimed water)

Table CC-17.
Offsetting Impacts for Hybrid Wet/Dry Cooling
Diablo Canyon Power Plant *(cont.)*

Category	Impacts – Construction	Impacts – Operations	Magnitude	Construction Impact Significance	Operation Impact Significance
Marine Ecological Resources	Saltwater - new localized disruptions to inshore marine habitat from installation of new inshore intake system. Fresh and Reclaimed Water – no impacts to marine resources.	Permanent lost of inshore marine habitat. Saltwater - reduced impingement and entrainment from reduced water withdrawals (90-95% reduction in withdrawals, influent velocity < 0.5 fps second and reduced and appropriate screening). Freshwater and Reclaimed Water – no seawater withdrawals, so no impingement or entrapment impacts to marine life.	Loss of acres of 0.35 acres of sub-tidal habitat. (Enercon, 2009)	Small Negative (saltwater) None (fresh and reclaimed water)	Large Positive
Waste	Increased generation of demolition and construction-related wastes. There will be significant earthwork – soil material balance to be developed in later assessment.	Increased generation of wastes from cooling tower maintenance activities and collection of wastes from the modified inshore intake system.	Earthwork material balance pending later assessment phase. Generation of 3,600 yd^3 of construction wastes to landfill. (Enercon, 2009)	Moderate Negative	Small Negative
Noise	Increased noise from construction activities associated with development of the cooling tower installation and associated intake modifications.	Increased noise from operation of the cooling tower system (cascading water, fans, pump, and motor noise). Impacts to distant public unlikely.	Construction activities and operation of the Hybrid cycle system will not result in an exceedance of the local noise criteria (nominally 70 dBa at nearest public noise receptor).	Small Negative	None

Table CC-17.
Offsetting Impacts for Hybrid Wet/Dry Cooling
Diablo Canyon Power Plant *(cont.)*

Category	Impacts – Construction	Impacts – Operations	Magnitude	Construction Impact Significance	Operation Impact Significance
Land Use	Construction activities will be occurring on previously occupied, undeveloped or undisturbed land. Some marine work will be necessary to modify the inshore portions of the existing intake system.	Significant re-purposing of previously occupied, undeveloped or undisturbed land for industrial purposes.	See Section 4.8 for estimated construction and excavation areas.	Moderate Negative	Moderate Negative
Terrestrial Ecological Resources	Construction will be confined to the largely undeveloped area with some habitat value north of the power block area, but also involve crossing a more sensitive and valuable riparian habitat along Diablo Creek.	The tower system is will result in some permanent loss of modest upland habitats and some permanent impacts to small portions of the riparian habitat along Diablo Creek.	See Section 4.8 for estimated construction and excavation areas.	Moderate Negative	Moderate Negative
Cultural & Paleontological Resources	Limited to potential for discovery of new cultural or paleontological resources during construction in the largely undeveloped area north of the power block area and in the expected pipeline crossings of the Diablo Creek.	Permanent loss of upland areas with limited potential for cultural and paleontological resources. Increased salt deposition from the saltwater tower operation may accelerate decay of local surface resources.	Salt deposition 916 ton/year on surrounding lands (Tetra Tech) from saltwater tower.	Small Negative	Small Negative
Visual Resources	The 175 foot towers arranged up a hillside will be a prominent feature in what had been an undeveloped area.	Plume abatement features will mitigate visible plume issue, but towers will remain prominent feature on a previously undeveloped area.		Moderate Negative	Moderate Negative
Transportation	Increased traffic from the construction workforce will worsen the existing level of service on local roads.	Limited additional fogging and icing impacts on local roads and impacts to local aviation.	See Section 4.8 for estimated construction duration. Detailed analysis of fogging and icing severity pending later assessment phase.	Small Negative	Small Negative

Table CC-17.
Offsetting Impacts for Hybrid Wet/Dry Cooling
Diablo Canyon Power Plant *(cont.)*

Category	Impacts – Construction	Impacts – Operations	Magnitude	Construction Impact Significance	Operation Impact Significance
Socioeconomic	While there will be construction-related employment opportunities, these opportunities are not expected to significantly strain local community resources (e.g., housing, school, fire/police services, water/sewer).	Maintenance staff levels may increase to address cooling tower system operation and corrosion mitigation (for the salt tower system).	See Section 4.9	Small Positive	None

Notes: Levels of Impact of Significance

Small: Environmental effects are not detectble or are minor, such that they will not noticeably alter any important attribute of the resource

Moderate: Environmental effects are sufficient to noticeably alter, but not significantly change the attributes of the resource.

Large: Environmental effects are clearly noticeable and are sufficient to change the attributes of the resource.

Table CC-18.
Major Cooling Tower Maintenance Activities
Diablo Canyon Power Plant

Activity	Recommended Frequency (Tower Supplier Should be Consulted to Develop Formal Program for the Selected Technology)	PDD	MDD	NDW	MDW	Hybrid
Check condition of finned-tube heat exchangers	Quarterly	✓	✓			✓
Cleaning of fins on heat exchanger tube bundles	Semiannually or as needed	✓	✓			✓
Operating ball cleaning system for tube internal surfaces	Semiannually or as needed	✓	✓			✓
Check for and repair/replace missing or broken water distribution pipes or nozzles	Monthly	✓	✓	✓	✓	✓
Weigh fill packs to characterize fouling	Annually			✓	✓	✓
Check for and repair/replace missing or broken fill packs	Quarterly			✓	✓	✓
Check for and repair/replace missing or broken drift eliminator packs	Quarterly			✓	✓	✓
Check for and repair/replace missing or broken drift eliminator seals	Quarterly			✓	✓	✓
Check oil level in gear box	Daily		✓		✓	✓
Check for foreign material in gear box oil	Every 2 weeks		✓		✓	✓
Replace oil in gear box	Semiannually		✓		✓	✓
Check backlash and endplay of gear box shafts	Semiannually		✓		✓	✓

Table CC-18.
Major Cooling Tower Maintenance Activities
Diablo Canyon Power Plant *(cont.)*

Activity	Recommended Frequency (Tower Supplier Should be Consulted to Develop Formal Program for the Selected Technology)	PDD	MDD	NDW	MDW	Hybrid
Ensure no buildup or other deposits are present on exterior surface of gear box (any inhibitors of proper cooling)	Semiannually		✓		✓	✓
Inspect gear box gears for wear and corrosion	Semiannually		✓		✓	✓
Check and adjust alignment of driveshaft	Semiannually		✓		✓	✓
Check and adjust fan pitch angles	Quarterly		✓		✓	✓
Check and adjust fan blade tracking	Quarterly		✓		✓	✓
Check and adjust fan blade tip clearance	Quarterly		✓		✓	✓
Check tightness of fan bolts	Quarterly		✓		✓	✓
Ensure fan weepholes are clear	Quarterly		✓		✓	✓
Check tightness of structural connecting bolts	Annually	✓	✓	✓	✓	✓
Check for and replace any fan blade wear or defects	Quarterly		✓		✓	✓
Check operating mechanical equipment for excessive noise	Daily		✓		✓	✓
Check vibration levels of operating mechanical equipment	Daily		✓		✓	✓
Check condition and repair if necessary – concrete shell	Annually	✓		✓		
Check proper attachment and condition of the airseal	Annually			✓		
Check condition of protective epoxy coating/sheeting - steel shell	Annually			✓		
Check for scale, algae, etc. to ensure water treatment is adequate	Weekly			✓	✓	✓
Check cold water basin level	Daily			✓	✓	✓
Inspect cold water basin and repair any cracks or coating defects as necessary	Semiannually			✓	✓	✓

Table CC-18.
Major Cooling Tower Maintenance Activities
Diablo Canyon Power Plant *(cont.)*

Activity	Recommended Frequency (Tower Supplier Should be Consulted to Develop Formal Program for the Selected Technology)	PDD	MDD	NDW	MDW	Hybrid
Relubricate motor bearings	Semiannually		✓		✓	✓
Ensure no buildup or other deposits are present on exterior surface of motor (any inhibitors of proper motor cooling)	Semiannually		✓		✓	✓
Check proper operation of valves	Monthly	✓	✓	✓	✓	✓
Lubricate valves	Quarterly	✓	✓	✓	✓	✓
Check proper operation of dampers	Monthly					✓
Check condition of flanged and threaded connections and replace gaskets as necessary	Monthly	✓	✓	✓	✓	✓
Check steel structures for evidence of corrosion	Annually	✓	✓	✓	✓	✓
Check function of and replace bulbs as necessary – aircraft warning lights on top of shell	Daily	✓		✓		