October 9, 2009

Michael Adackapara
Division Chief
California Regional Water Quality Control Board
Sana Ana Region

RE: ORDER NO. R8-2009-0033

Dear Mr. Adackapara,

Thank you for the opportunity to comment on the draft Riverside County area NPDES permit. My comments primarily pertain to section XII which contains new development requirements. Overall, CONTECH supports the requirement that runoff reduction BMPs be utilized where feasible to restore the predevelopment hydrologic balance. We also support the use of filters that are demonstrated to be effective for pollutants of concern where retention is infeasible, without triggering in-lieu program requirements. We support the creation of an "Urban Runoff Fund" and in-lieu program which would be used to ensure that that the impact of development is at least mitigated on a watershed basis, although the trigger point for enrollment in that program must be clarified. Finally, it is imperative that LID BMPs be held to the same inspection, maintenance and tracking requirements as other structural BMPs.

Specific comments and suggested changes are as follows:

Page 89, Section XII.E.3
Comment:
This section should be revised to require on-site retention of the water quality volume where technically feasible. Where that is not technically feasible, the retention volume should be maximized and any runoff discharged during the water quality event must be treated to the Maximum Extent Practicable by BMPs with at least moderate effectiveness for the pollutants of concern expected to be generated on site. Where the most effective and technically feasible BMP is not implemented, participation in section X.II.F programs should be required.

Page 89, Section XII.E.4
Suggested Change:
Add "Allow the use of subsurface infiltration systems with adequate pretreatment to protect groundwater resources."
Justification:
The use of underground infiltration and detention BMPs has been strongly discouraged in the past by Riverside County Flood Control District and others. However, systems such as perforated pipe, plastic chambers and concrete arch storage products are used throughout California to successfully eliminate discharge of the water quality volume. The reluctance to allow or outright prohibition on the use of underground BMPs may prevent the use of such

infiltration BMPs on sites where they are feasible, but where landscape based infiltration BMPs are infeasible.

Page 90, Section XII.E.7
Suggested Change:
Replace:
"(3) Vegetated BMPs that promote evapotranspiration including bioretention, biofiltration and bio-treatment."
With:
"(3) BMPs that promote evapotranspiration, including landscape based retention and filtration"

Justification:
The requirement that BMPs include vegetation is unnecessary and conflicts with potable water use reduction goals. For example, a landscape based filter or retention system with an ornamental rock surface may be aesthetically pleasing, effective in removing pollutants and reducing runoff rates, and would be constructed entirely without irrigation. The core performance objective inherent in this requirement should be stated rather than giving prescriptive BMP design guidance.

Page 90, Section XII.E.8
Comment:
The word "Biotreat" should be changed to "filter"

The term biotreat presumably refers to those structural treatment controls that include both filtration and some biological process. The term does not indicate any particular level of pollutant or runoff volume reduction. The addition of the word bio-filter as an acceptable means of treatment seems to exclude the use of media filters without a biological component. This is problematic, since some non-vegetated media filters are reliably more effective than some bio-filters. Therefore to allow bio-filters as a category and to exclude non-vegetated filters violates the maximum extent practicable standard.

A 2008 summary report of the International Stormwater BMP Database entitled "Analysis of Treatment System Performance[1]" illustrates this fact. In it, the effectiveness of common BMPs like media filters and bio-filters is reported for conventional stormwater pollutants. The bio-filter category in the database is dominated by vegetated swales and filter strips. The media filter category includes Austin and Delaware sand filters, and various other bed and cartridge based filters without vegetation. The report shows that media filters tend to outperform biofilters for

[1] This database is sponsored by EPA, the Water Environment Research Federation, the American Society of Civil Engineers and others. The summary report can be found on-line at www.bmpdatabase.org

important parameters like TSS and TP. Heavy metal removal rates are not substantially different between BMP types, although median average effluent concentrations of total zinc and total copper were lower for media filters.

Clearly there are highly effective media filter and biofilter designs that will maximize pollutant load reduction. For example, swale designs that capture the water quality storm, percolate it through vegetation and engineered soil, and finally collect that filtered water in an underdrain prior to release are most effective. This design is fundamentally different than conventional swales and grass filter strips that are designed to convey the design storm over land as shallow, low velocity flow with only incidental infiltration.

Non-vegetated filter design varies dramatically as well. On one end of the spectrum are the catch basin inserts and other BMPs with filter fabric barriers or a token amount of coarse media with virtually no contact time with runoff at design flow rates. On the other end of the spectrum are sand or engineered media filters which typically are designed with minutes to hours of contact time and are highly effective for most pollutants. The obvious challenge for either class of filters is to separate the designs likely to achieve adequate performance from those that are inadequate. This performance-based differentiation will be required regardless of whether or not the filtration options allowed by this permit are limited to those with a biological component. This differentiation can either be added to the permit in section XII.C.2, or to the updated DAMP.

Thankfully there are options for separating potentially suitable BMPs from those that are ineffective or still in the experimental stage without burdening the permittees with the task. For example, the Sacramento Stormwater Quality Partnership (SSQP)[2] has an evaluation program for proprietary treatment BMPs which has identified several suitable stand–alone treatment options. Outside of California, the Washington State Department of Ecology (DOE)[3] and the New Jersey Department of Environmental Protection (DEP)[4] have BMP performance verification programs that require extensive lab and field studies prior to approval for stand-alone treatment. A relatively simple approach to differentiating between filters would be to require that filters be fully approved for stand alone treatment through the Washington DOE, New Jersey DEP or SSQP prior to use.

An alternative language option could be borrowed from the stormwater quality credit criteria from the LEED 2009 rating system which requires:

[2] Sacramento Stormwater Quality Partnership. Program information available at: http://www.msa.saccounty.net/sactostormwater/SSQP/development/treatment-options.asp
[3] Washington Department of Ecology. Program information available at: http://www.ecy.wa.gov/programs/wq/stormwater/newtech/index.html
[4] New Jersey Department of Environmental Protection. Program information available at: http://www.nj.gov/dep/stormwater/treatment.html

BMPs used to treat runoff must be capable of removing 80% of the average annual postdevelopment total suspended solids (TSS) load based on existing monitoring reports. BMPs are considered to meet these criteria if:

- *They are designed in accordance with standards and specifications from a state or local program that has adopted these performance standards,*

OR

- *There exists infield performance monitoring data demonstrating compliance with the criteria. Data must conform to accepted protocol (e.g., Technology Acceptance Reciprocity Partnership [TARP], Washington State Department of Ecology) for BMP monitoring.* [5]

At CONTECH we have been researching stormwater filter performance for over 15 years and offer a vegetated version, the UrbanGreen BioFilter® (Attachment 1) and several non-vegetated versions including the Stormwater Management StormFilter® (Attachment 2). Throughout the United States, more than 80,000 StormFilter cartridges have been installed, often in combination with infiltration or detention systems, or other stormwater management practices. In California there are over 25,000 StormFilter cartridges in operation. During the past permit term more than 130 separate StormFilter system installations have been completed in the Santa Ana Region alone. This system is typically used on the densest and most challenging sites where infiltration and landscape based BMPs are not feasible. The flexibility to use this BMP and similarly effective controls such as sand filters without triggering waiver programs must be maintained for those projects where they are in fact the most effective controls that are technically feasible.

Page 93, Section XII.E.10.iii.1.c
Suggested Change:
Either remove the 3% Effective Impervious Area requirement, or define disconnection as retention of the water quality volume from disconnected areas.

Justification:
The hydraulic capabilities of the pervious site features that runoff from impervious areas can be routed through in order to render them ineffective, must be specified. If they are not, it will be possible to meet this requirement with minimal hydrologic benefit. For example, based on the current definition in Appendix 4, a parking lot draining to a grass filter strip or swale having minimal infiltration capacity would be considered "ineffective" even if the runoff volume is not significantly reduced.

Any disconnection should be encouraged, providing that erosion and prolonged saturation risks are mitigated, however a 3% EIA requirement as written is not an adequate HCOC mitigation method.

[5] United States Green Building Council. (2009) "LEED 2009 for New Construction and Major Renovations". Sustainable Sites Credit 6.2

Page 93: XII.F.1
Suggested Change:
Add the following text to the beginning of the section:

"If on-site retention of the water quality volume is not feasible, runoff reduction should be maximized and the most effective and technically feasible control must be utilized to treat any portion of the water quality event that is discharged. If the project does not implement the most effective and technically feasible, treatment controls with moderate effectiveness for the pollutants of concern expected to be generated on site must be implemented. In addition, the cost difference between the most effective technically feasible BMP and the BMP implemented X 1.5 must be paid to the Urban Runoff fund. Alternatively, the difference between the water quality volume and the amount of runoff retained by the BMPs implemented on site times 1.5 may be retained on another site in the same watershed."

Justification:
As written, it is not entirely clear here or in Section XII.E.3 when the in-lieu program is triggered. It should be triggered when the Maximum Extent Practicable standard is deliberately not met. If participation in the in-lieu program is required even where the most effective controls that are technically feasible and not cost prohibitive are implemented, the program represents a higher burden than is supported by the Clean Water Act standard of MEP. A cost or retention volume multiplier is fair if the program is triggered only when a project chooses in-lieu program participation instead of implementation of BMPs to the MEP on site. This logic must also be clarified in Section XII.E.3 on page 89.

Page 96 Section XII.G.4
Comment:
Please make it clear that the operation and maintenance tool provisions also apply to LID BMPs including bioretention cells, infiltration systems and harvest and use system. Even where these systems are landscape based they must be inspected and maintained regularly to ensure adequate storage volume, hydraulic capacity and other operational functionality.

Page 97, Section XII.J.3
Comment:
Please make it clear that this section also applies to LID BMPs. See previous comment.

Appendix 4, Page 6 of 16
Comments:
The definition of LID that appears here goes far beyond what is needed. This is not an appropriate place to editorialize regarding the possible benefits of an LID approach. The findings section may be a more appropriate location to include much of this information.

In particular, the assertions of aesthetic and cost benefits of LID and negative hydraulic effects

associated with traditional treatment controls are subjective and depend on site conditions. In many cases, landscape based LID approaches come with additional engineering costs and land value opportunity costs. Many LID BMPs capture and retain pollutants in the landscape which can be a maintenance burden and a public nuisance. Regarding hydrology impacts, too much infiltration can also be detrimental. Mandatory retention of the design storm on all sites regardless of predevelopment hydrology has been advocated by some as the definition of LID implementation. Yet, in most cases this approach will dramatically increase infiltration rates over natural rates which can be problematic.

Please change the word “Biotreat” to “Filter” where it appears to make the definition more consistent with EPA, LID Center and other definitions which include the term “filter”.

Thank you again for this opportunity to comment. Please let me know if you have any questions.

Sincerely,

Vaikko P. Allen II, CPSWQ, LEED-AP

Regulatory Relations Manager - Southwest
CONTECH Stormwater Solutions, Inc.
allenv@contech-cpi.com

Attachment 1
UrbanGreen BioFilter®

URBANGREEN™

leaving a greener footprint on your site.

BIOFILTER

The UrbanGreen BioFilter is an enhanced biofiltration system that combines nature's ability to treat stormwater runoff with the most highly tested and proven media filtration system on the market today - the Stormwater Management StormFilter®. This combination of biological and engineered media filtration creates the perfect balance for the removal of the most common pollutants found in stormwater runoff. The UrbanGreen BioFilter was developed to help meet today's site design challenges of Low Impact Development.

The UrbanGreen BioFilter is an enhanced biofiltration system incorporating the benefits of bioretention, biofiltration, and media filtration.

1. The system can be configured for curb and gutter flow, rooftop drainage, or as an area drain in parking lots.
2. Initial runoff flow is treated by biofiltration. Biofiltration is achieved using an engineered soil mixture. The soil components are designed for high permeability while maintaining moisture content for plant growth. The soil mixture has a documented ability to remove fine sediments, metals, nutrients, hydrocarbons, and other common pollutants found in stormwater.
3. Native vegetation provides nutrient uptake and evapotranspiration. Multiple vegetation options are available for all geographies.
4. Once the Biofiltration bay reaches its capacity, the remaining flow is treated by StormFilter media filtration cartridges. Media options include Perlite, Zeolite/Perlite/Granular activated carbon mix (ZPG), or CSF® leaf media.
5. High flow is directed downstream of the system via an internal bypass. The built-in bypass eliminates the need and cost of external bypass structures.
6. System can be designed to discharge to conveyance system or configured for subsurface infiltration when combined with CONTECH infiltration products.

Patents Pending

Nothing in this catalog should be construed as an expressed warranty or an implied warranty of merchantability or fitness for any particular purpose. See the CONTECH standard Conditions of Sale (viewable at www.contech-cpi.com/cos) for more information.

800.338.1122
www.contech-cpi.com
CONTECH Construction Products Inc.

CONTECH®
CONSTRUCTION PRODUCTS INC.

UrbanGreen™ BioFilter
Design, Operation and Performance

BioFilter

UrbanGreen™
leaving a greener footprint on your site.

UrbanGreen™ BioFilter Overview

The UrbanGreen™ BioFilter is an enhanced biofiltration system that combines nature's ability to treat stormwater runoff with the proven performance capabilities of cartridge-based media filtration. This combination of biological and engineered media filtration create the perfect balance for the removal of common pollutants found in stormwater runoff.

Although the UrbanGreen BioFilter will complement any site, it was specifically developed as a component for low impact development (LID) sites. LID is an approach to stormwater management, emphasizing the use of small, decentralized management practices to treat rainfall close to its source and facilitate infiltration back into the ground. The goal of LID is to maintain the predevelopment hydrology and to lower the overall environmental impact footprint of the site.

Common LID practices include biofiltration, bioretention and media filtration. The UrbanGreen BioFilter incorporates all three of these processes into one system to maximize the pollutant removal capabilities. Furthermore, the UrbanGreen BioFilter is specifically designed to treat small catchment areas and can easily be combined with underground infiltration, so runoff can be treated and infiltrated close to where the rain falls. This decentralized approach to managing stormwater is a core principle of LID.

Basic Operation

The UrbanGreen BioFilter is constructed in a curb inlet configuration and designed to treat runoff from roadways, parking lots, roof tops, and other runoff generating surfaces. The basic operation and components of the UrbanGreen BioFilter are illustrated in Figure 1. As illustrated, initial runoff enters the system and is directed by the inlet weir into the bioretention bay. A variety of complex treatment processes including physical, chemical, and biological activities occur as stormwater infiltrates through the engineered soil mixture and interfaces with the root system of the tree or other vegetation. The specific components of the engineered soil mixture were selected to provide high pollutant removal and permeability while maintaining sufficient moisture content for plant growth. After infiltrating through the engineered soil mixture stormwater exits the bioretention bay via the bioretention bay underdrain which directs the treated stormwater to the outlet chamber.

The UrbanGreen BioFilter employs two distinct treatment components. The first is the bioretention component as described above. The second is a media filtration component. When the bioretention bay reaches its treatment capacity, runoff begins to flow through the cartridge bay inlet located at a set elevation above the surface of the engineered soil mixture. This runoff is treated by Stormwater Management StormFilter® (StormFilter) media cartridges prior to discharging into the outlet chamber. StormFilter media cartridges are among the most thoroughly tested and proven stormwater treatment devices and can be designed with a variety of media types including CSF leaf compost, Perlite and ZPG (a blend of Zeolite, Perlite and Granular Activated Carbon) to target the specific pollutants of concern. More information on the operation and performance of the StormFilter media cartridge can be found in the StormFilter Configuration Guide available at www.contech-cpi.com.

The two stage treatment process of the UrbanGreen BioFilter ensures that the initial runoff from small urban catchments, which commonly carries the highest pollutant concentrations, is treated via bioretention. Higher flows are treated by StormFilter media cartridges. Consequently, unlike similar manufactured tree box filters, the bioretention bay is not inundated with a higher degree of runoff or pollution than it can reasonably handle without causing frequent bypass or maintenance issues.

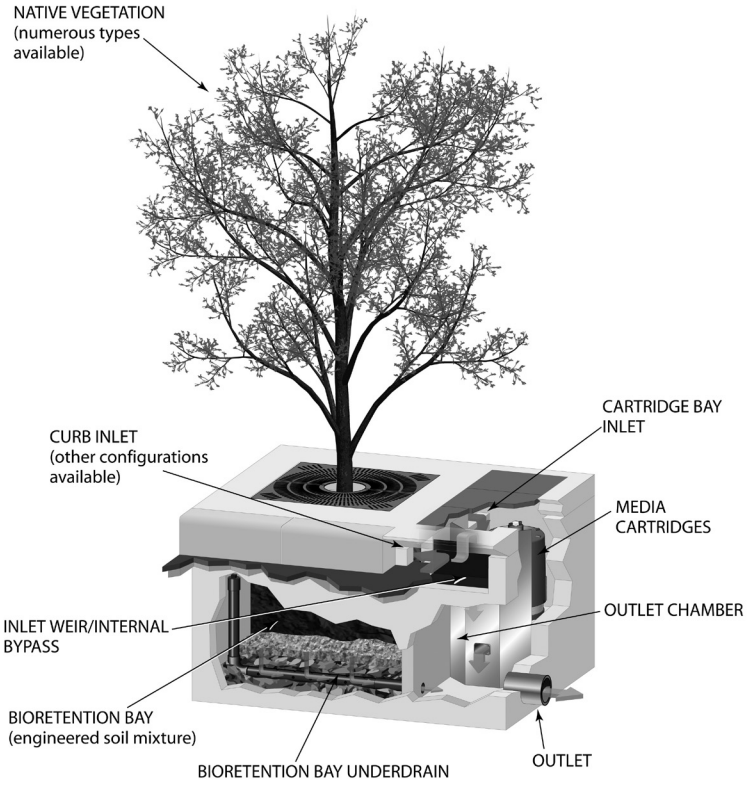

Figure 1: Basic Operation & Components

The UrbanGreen BioFilter is designed with an internal bypass to allow runoff exceeding the capacity of both the bioretention bay and the media cartridges to discharge directly into the outlet chamber. This unique feature of the UrbanGreen BioFilter protects against high flow washout of previously captured pollutants and reduces overall project costs by eliminating the need for external bypass structures.

Treated and bypassed flows are joined in the outlet bay of the system where they can then be directed into a detention or retention system as site conditions and regulations dictate. If infiltration is feasible based on soil conditions, CONTECH recommends that the UrbanGreen BioFilter be combined with subsurface infiltration BMPs such as the ChamberMaxx™ or perforated CMP system (more information available at www.contech-cpi.com) infiltration chambers to facilitate groundwater recharge and reduce runoff from the site.

Design Process

The UrbanGreen BioFilter provides a variety of stormwater management and development benefits including a high level of removal of the primary pollutants of concern, unconstrained placement of the system on the site, improved aesthetics, improved air quality and potential LEED credits. Another benefit is the simple sizing process for this technology.

As shown in Table 1, the UrbanGreen BioFilter is available in one standard size and has a total treatment capacity of 61 gallons per minute (gpm). The total treatment capacity is the aggregate of the treatment capacities of the bioretention bay and StormFilter media cartridges.

Treatment Capacity[1,2] (gpm)	Footprint[3] (LXW) (ft)	Depth[4] (ft)
61.0	6 x 8	5.083

1. Combined capacity of bioretention and media cartridges
2. Maximum conveyance flow through the system is a function of the allowable depth of flow at the curb face as defined by the governing jurisdiction
3. Inside dimensions
4. Distance from tree grate to invert of outlet pipe (or vault floor)

Table 1: Treatment Capacity, Bypass Capacity and Dimensions

The design infiltration rate of the bioretention bay is controlled by the initial media permeability and a flow control orifice. Although the infiltration rate may vary in different jurisdictions, 50 in/hr (approximately 0.5 gpm per square foot) of surface area is the typical design infiltration rate. The surface of the engineered soil mixture is approximately 32 square feet which equates to a treatment capacity of 16 gpm.

Testing has shown that the engineered soil mixture in the bioretention bay can infiltrate at a rate of 360 in/hr at the design driving head of 12 inches, however an outlet flow control limits the rate so significant pollutant loads can accumulate before the media drops below the design infiltration, and maintenance is required. Using an outlet flow control to control infiltration rates rather than the media itself allows soil with a higher void volume to be used. This substantially decreases the frequency of maintenance because there is more storage volume for captured pollutants within the soil media. It also improves performance by reducing velocities in the pore spaces within the media.

The treatment capacity of the media cartridge portion of the UrbanGreen BioFilter is based on treating runoff at a rate of 2 gpm per square foot of cartridge surface area and utilizing two 27-in media cartridges. The treatment capacity of each cartridge is 22.5 gpm for a total capacity of 45 gpm for both cartridges. Like the soil mixture, the media cartridges are designed with a flow control, so flow through each cartridge is restricted to the design rate. This feature improves both the performance and longevity of the cartridges.

Local regulations will typically determine how much flow needs to be treated. Many regulatory agencies specify a water quality "design storm" such as a 6-month or 1-year return period storm event. Refer to local guidelines for the calculation of required design storm. Once the treatment flow rate has been determined, simply divide that amount by the total treatment capacity of the UrbanGreen BioFilter (61 gpm) to determine the number of units needed.

When placing the system on site, there are few constraints on the location of the UrbanGreen BioFilter system (unlike similar systems that cannot be placed at the low point of a parking lot or require unidirectional flow along a curb face in order to function). Once a location for the UrbanGreen BioFilter has been determined, compare the anticipated peak conveyance flow with the bypass capacity to ensure that the system has sufficient capacity to handle these higher flows.

Two hydraulic controls impact the bypass capacity of the UrbanGreen BioFilter. The throat opening controls the hydraulic capacity as a function of the opening width, allowable top width, gutter cross slope, manning's "n," and other relative factors. State and local jurisdictions typically provide inlet design guidelines for flow hydraulics. (If this information is not available, refer to the FHWA HEC 12 Drainage of Highway Pavements, 1984. http://www.fhwa.dot.gov/engineering/hydraulics/pubs/hec/hec12.pdf)

The second hydraulic control is the internal bypass weir. The crest elevation is 4 inches below the grade break point of the curb opening inlet at the face of curb and has a weir length of 2-ft by 4-in. It is a sharp crested weir. Calculate the capacity of the bypass weir using the discharge equation, $Q = cLH^{1.5}$.

For example, with 4 inches of driving head and a discharge coefficient of 3.3, the design discharge is 1.48 cfs. At a discharge of 2 cfs, the head on the weir is 4.9 inches giving a depth of flow at the curb face of approximately 1-in. This is given the conservative assumption that there is no flow through the treatment system itself.

The UrbanGreen BioFilter has been hydraulically tested and evaluated for scour at flows up to 2 cfs with results showing that no scour was present in the system. These observations indicate that the system could handle higher flows without compromising performance. The maximum bypass capacity of the UrbanGreen BioFilter is therefore a function of the maximum allowable depth of flow at the curb face as defined by the governing jurisdiction.

This substantial internal bypass capacity is a key advantage of the UrbanGreen BioFilter as it eliminates the need for additional external structures. However, if the bypass capacity of the UrbanGreen BioFilter is less than the anticipated peak conveyance flow rate, then an external bypass may be used.

Performance Testing

As part of the development of the UrbanGreen BioFilter, several soil mixtures were subject to large-scale column tests in order to identify a combination of soil components that offered the best combination of porosity, conductivity, treatment capacity, water retention capacity and performance (de Ridder, 11/17/08).

Testing was conducted using an apparatus that simulated a 1.8-ft^2 section of a full-scale UrbanGreen BioFilter soil bed. Experiments included:

1. Retention—water retention characteristics;
2. Head Loss—stage discharge relationships; and
3. Sediment Removal—assessment of sediment removal capabilities.

The best mixture identified for use with the UrbanGreen BioFilter consisted of a specific mixture of sand, processed leaf compost, porous aggregate and special additives.

With respect to water retention, the chosen soil mixture demonstrated a 1-hr specific yield (ratio of the volume of water that drains due to gravity in 1-hr to the total volume of soil) of 0.39 and a 1-hr specific retention (ratio of volume of water retained against gravity in 1-hr to the total volume of soil) of 0.12. These values were similar to those observed for soil mixtures with particle size distributions that were much finer than the chosen soil mixture.

The bioretention component of the UrbanGreen BioFilter treats stormwater at a rate of 50 in/hr with 12-in of driving head. The high conductivity of the chosen soil mixture provides the desired hydraulic loading rate at a much lower driving head (Figure 2). This suggests that the soil mix allows the system to operate at design hydraulic loading rates for an extended period of time despite continuous interstitial sediment accumulation.

Sediment removal characteristics of the chosen soil mix were very high. Greater than 95% removal was observed at the design operating rate of 50 in/hr using the Sil-Co-Sil 106 sediment removal testing standard (SG = 2.65, d50 = 25-um). More information on the evaluation of the UrbanGreen BioFilter is available upon request.

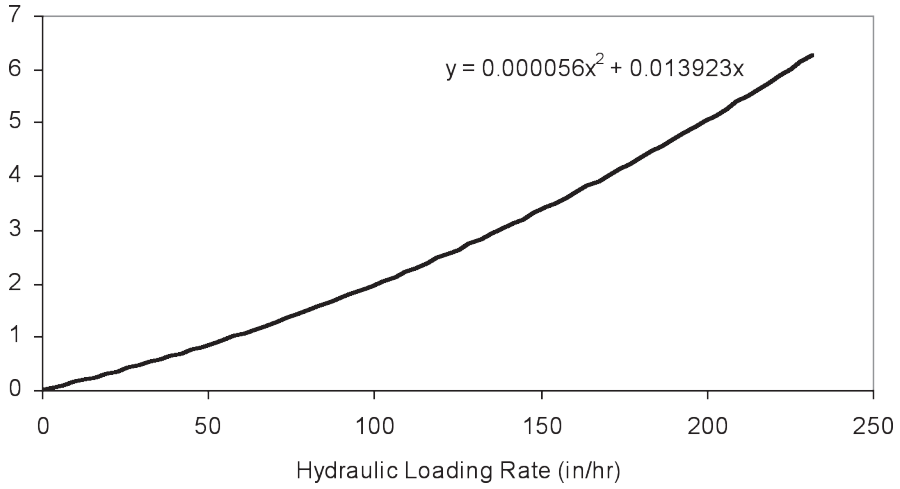

Figure 2: Hydraulic Loading Characteristics of the UrbanGreen BioFilter

©2009 CONTECH Construction Products Inc.

CONTECH Construction Products Inc. provides site solutions for the civil engineering industry. CONTECH's portfolio includes bridges, drainage, sanitary sewer, stormwater and earth stabilization products.

Nothing in this catalog should be construed as an expressed warranty or an implied warranty of merchantability or fitness for any particular purpose. See the CONTECH standard Conditions of Sale (viewable at www.contech-cpi.com/cos) for more information

The product(s) described may be protected by one or more of the following US patents: 5,322,629; 5,624,576; 5,707,527; 5,759,415; 5,788,848; 5,985,157; 6,027,639; 6,350,374; 6,406,218; 6,641,720; 6,511,595; 6,649,048; 6,991,114; 6,998,038; 7,186,058; 7,296,692; 7,297,266; related foreign patents or other patents pending.

Please Recycle

Attachment 2
Stormwater Management StormFilter® Performance Summary

The Stormwater Management StormFilter®
Performance Summary

September 9, 2009

12021-B NE Airport Way, Portland, OR 97220 Tel: 800.548.4667 Fax: 800.541.1271 Web: contechstormwater.com

Stormwater Management StormFilter® Performance

Table of Contents

1. StormFilter Product Brief

2. Pollutants

    a. Field - Total Suspended Solids Removal
    b. Lab - Total Suspended Solids Removal
    c. Total Phosphorus
    d. Total Nitrogen
    e. Heavy Metals Removal
    f. Oil and Grease
    g. PAHs and Phthalates
    h. Bacteria

CONTECH® STORMWATER SOLUTIONS INC.

Target Pollutants

- Total suspended solids
- Soluble heavy metals
- Oil and grease
- Total nutrients
- Organic toxicants

Applications

- Commercial, municipal, and industrial sites
- High-density and single-family residential sites
- Maintenance, transportation and port facilities
- Parking lots
- Arterial roads
- Bridges

Filtration Products

CONTECH Stormwater Solutions provides filtration Best Management Practices (BMPs) designed to meet the most stringent regulatory requirements for stormwater treatment. Our products remove the most challenging target pollutants using sustainable media – including total suspended solids (TSS), soluble heavy metals, oil and grease, and total nutrients. Product field-proven performance has earned hundreds of standalone BMP approvals from regulatory agencies nationwide.

Why Filtration?

- Provides the highest treatment level of any standalone, passive BMP
- Meets the most stringent regulatory requirements
- Scalable cartridge-based design allows sizing to meet project requirements
- Targets site-specific pollutants with customized filtration media
- HS-20 rated, underground BMPs maximize land use

About CONTECH Stormwater Solutions

When you select CONTECH Stormwater Solutions, you'll get much more than stormwater management products. You'll have dedicated, knowledgeable engineers and technical experts to help you select the right technology to meet your regulations. Our organization is committed to preserving water resources by providing customized, site-specific stormwater treatment solutions. And, every product is backed by the most comprehensive lab, field and independent testing in the industry. As one of the four divisions of CONTECH Construction Products – Stormwater, Bridge, Earth Stabilization, and Drainage – we bring you the most comprehensive portfolio of solutions in the industry. Every day. Every site.

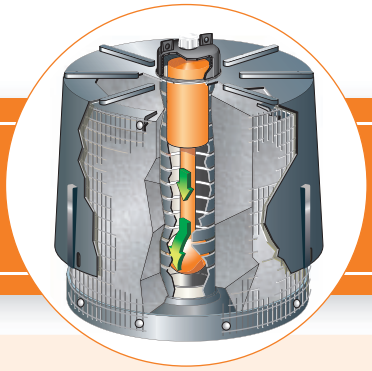

The Stormwater Management StormFilter®

- Siphon-actuated filtration
- Surface cleaning mechanism extends maintenance intervals
- Uniform sediment loading increases cartridge longevity
- Five optimized configurations fits different applications
- Cartridge-based system provides exact sizing
- Dry sump means no water to remove during maintenance
- Extensive field verification studies prove performance

Filtration

CONTECH® STORMWATER SOLUTIONS INC.

StormFilter

Siphon-actuated filtration

Designed to meet stringent regulatory requirements, The Stormwater Management StormFilter® targets a full range of pollutants in urban runoff. Using a variety of sustainable media and passive filtration, the StormFilter effectively removes TSS, soluble heavy metals, oil and grease, and total nutrients.

The patented surface cleaning system prevents surface blinding and extends the cartridge life cycle as well as maintenance intervals. The StormFilter is cost-effective, highly reliable, and easy to install.

From small, pre-fabricated catch basins to large box culvert and panel vaults, StormFilter systems are installed underground, leaving valuable land available for development. The compact design also reduces construction and installation costs by limiting excavation.

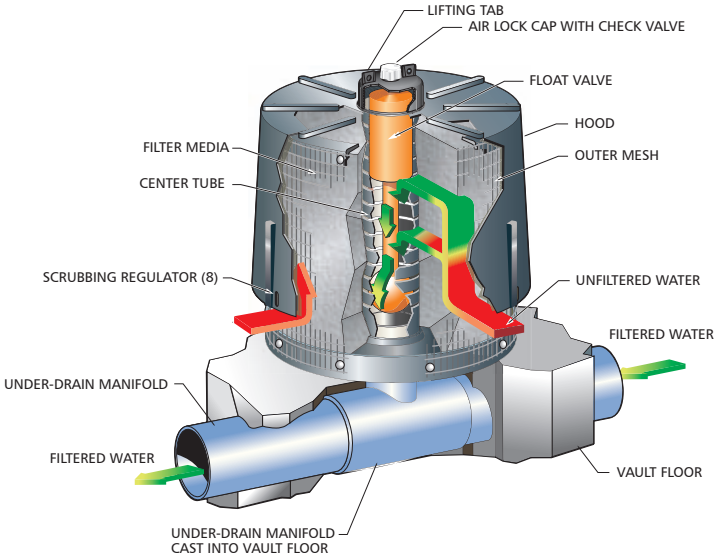

How does it work?

The StormFilter is a passive, siphon-actuated, media-filled filter cartridge that traps and adsorbs particulates and pollutants.

During a storm, runoff passes through the filtration media and starts filling the cartridge center tube. Air below the hood is purged through a one-way check valve as the water rises. When water reaches the top of the float, buoyant forces pull the float free and allow filtered water to drain.

After the storm, the water level in the structure starts falling. A hanging water column remains under the cartridge hood until the water level reaches the scrubbing regulators. Air then rushes through the regulators releasing water and creating air bubbles that agitate the surface of the filter media, causing accumulated sediment to drop to the vault floor. This patented surface-cleaning mechanism helps restore the filter's permeability between storm events.

Vault StormFilter

- Site-specific design treats the water quality storm
- Engineered to simplify the entire stormwater system and lower overall cost
- Easy installation — arrives on-site fully assembled

High Flow StormFilter

- One structure for easy installation
- Sized to meet the site-specific treatment rate for lower capital, installation and maintenance costs
- Reduces labor and site work associated with cast-in-place designs

Volume StormFilter

- Volume-based
- Configured as an entire system or partial system (pretreatment captures the WQv; filtration flow control)
- Low cost installation — precast components simplify installation

CONTECH® STORMWATER SOLUTIONS INC.

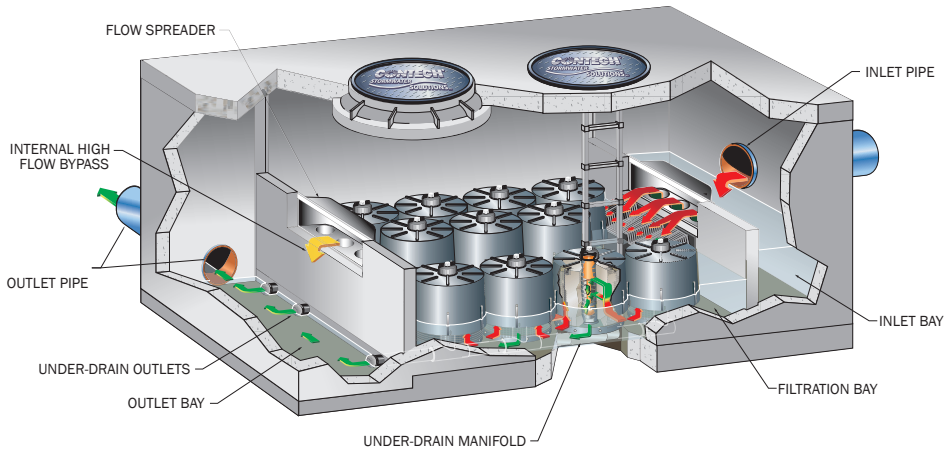

The Stormwater Management StormFilter®

- An array of filtration media targets site-specific pollutants
- Designed for maintenance cycles of one year or longer so your filtration system remains active all year long
- Flow-based and volume-based systems available to fit regulations on your project
- Pre-manufactured designs make installation easier, save you time and money
- Cartridge-based systems provide exact sizing for every project
- Dry, or nearly dry, between storm events with optional Drain-Down — no water to remove during maintenance

Media Choices

Our filtration products can be customized using different filter media to target site-specific pollutants. A combination of media is often recommended to maximize pollutant removal effectiveness.

Perlite is naturally occurring puffed volcanic ash. Effective for removing TSS, oil and grease.

CSF® Leaf Media and MetalRx™ are created from deciduous leaves processed into granular, organic media. CSF is most effective for removing soluble metals, TSS, oil and grease, and neutralizing acid rain. MetalRx, a finer gradation, is used for higher levels of metal removal.

Zeolite is a naturally occurring mineral used to remove soluble metals, ammonium and some organics.

GAC (Granular Activated Carbon) has a micro-porous structure with an extensive surface area to provide high levels of adsorption. It is primarily used to remove oil and grease and organics such as herbicides and pesticides.

	Perlite	CSF	MetalRx	Zeolite	GAC
Sediments	✓💧	✓			
Oil and Grease	✓💧	✓	✓		
Soluble Metals		✓	✓	✓💧	
Organics		✓	✓		✓💧
Nutrients	✓	✓	✓	✓	

✓-StormFilter Application 💧-VortFilter Application

Note: Indicated media are most effective for associated pollutant type. Other media may treat pollutants, but to a lesser degree.

CatchBasin StormFilter

- Low cost, ideal for small sites with stringent regulations
- Low hydraulic profile
- 3-in-1 design: Catch basin, high flow bypass, filtration BMP
- Easy installation — arrives on-site fully assembled

Curb-Inlet StormFilter

- Low drop filtration meets stringent treatment regulations on low drop sites
- Curb inlet installs out of the roadway, and treats sheet flow as it enters the stormwater system
- 3-in-1 design reduces costs and simplifies design

Parameter Brief

Summary of Field Performance Evaluation of the Stormwater Management StormFilter® for Removal of Total Suspended Solids

Introduction

The Washington State Department of Ecology (Ecology) and the New Jersey Department of Environmental Protection (NJDEP) have established individual statewide certification programs for the evaluation and approval of stormwater best management practices (BMPs). The certification programs establish guidelines and protocols for meeting state regulatory stormwater treatment requirements and define analytical methods for the evaluation of suspended solids removal efficiency.

The Stormwater Management StormFilter® (StormFilter) is the first manufactured BMP to receive stand-alone approval by both NJDEP and Ecology for meeting state requirements for removal of total suspended solids (TSS). Summaries of the certification programs and the StormFilter field evaluations are included below.

Field Evaluation Programs

Technology Assessment Protocol – Ecology

In 2002, Ecology established the Guidance for Evaluating Emerging Stormwater Treatment Technologies, Technology Assessment Protocol – Ecology (TAPE) for evaluating stormwater BMPs. The primary objective of the TAPE is to characterize BMP effectiveness in removing pollutants from stormwater in accordance with the performance claims and treatment goals outlined by Ecology (Table 1).

The TAPE technology evaluation process determines use-level designations for each BMP technology. Where an emerging technology is not in widespread use, a Pilot Level Designation may be assigned, allowing limited use in order to demonstrate performance in the field. If the technology has substantial performance data, Ecology may grant a Conditional Use Level Designation, defining a period when field testing per the TAPE must be completed in order to obtain a General Use Level Designation (GULD). A GULD confers a general acceptance for the technology as it has satisfied Ecology's treatment goals per the TAPE.

The technology evaluation process that leads to a GULD from Ecology involves several elements beyond the execution of a field-monitoring program. The applicant must implement a Quality Assurance Project Plan (QAPP), outlining the monitoring program specifics in accordance with the TAPE. In addition to the QAPP, the applicant must submit an independent Technology Evaluation Engineering Report (TEER) to Ecology for review and approval (WADOE, 2004). The TEER is a third-party document that evaluates performance claims and field results, and then recommends use-level designations. Representatives from Ecology and local municipalities participate in a Technical Review Committee that is responsible for reviewing BMP performance documentation and providing additional approval recommendations to Ecology.

Technology Acceptance Reciprocity Partnership - Tier II Protocol

The State of New Jersey is a member of the Technology Acceptance Reciprocity Partnership (TARP), a joint effort between six states to share information on the performance of emerging BMP technologies. The TARP Tier II Protocol for Stormwater Best Management Practice Demonstrations (TARP Tier II Protocol) provides standards for evaluating stormwater technologies (TARP, 2003).

The NJDEP has developed a BMP certification program for performance claims in accordance with the TARP Tier II Protocol. The New Jersey Corporation of Advanced Technology (NJCAT) verifies laboratory and field performance claims and the NJDEP reviews and certifies the NJCAT verification.

CONTECH Stormwater Solutions, Inc. (CONTECH) began the process of obtaining product approval for the StormFilter in New Jersey by seeking verification from NJCAT. The initial application prompted extensive laboratory evaluation, yielding substantive performance claims (CONTECH, 2001). The laboratory evaluation was verified by NJCAT and used to support a Conditional Interim Certification, issued by NJDEP.

A requirement of Conditional Interim Certification is the execution of field monitoring conducted in accordance with the TARP Tier II Protocol to verify field performance claims relative to laboratory claims (TARP, 2003). The Greenville Yards Industrial Park Field Evaluation Project Plan was accepted by NJCAT and NJDEP as TARP Tier II compliant and monitoring activity began in June 2004 (CONTECH, 2004). Upon successful completion of field monitoring, NJCAT issues a Field Verification, followed by Final Certification from NJDEP. The NJDEP performance goal for stand-alone treatment is listed in Table 1.

Table 1: Ecology Performance Goals for Basic Treatment

Jurisdiction	Category (mg/L)	Goal
Ecology	Influent TSS-WA EMC < 100	Effluent EMC ≤ 20 mg/L
	Influent TSS-WA EMC > 100	80% Removal
NJDEP	TSS	80% Removal

Field Evaluation Site Descriptions

Washington Field Evaluations

Two field evaluations were conducted as part of the performance assessment of the StormFilter in the State of Washington. The Heritage Marketplace (HMP) StormFilter system treats runoff from 4 acres of primarily impervious asphalt surrounding a commercial retail center in Vancouver, WA. The Lake Stevens North (LSN) StormFilter system is adjacent to Lake Stevens and drains an area of 0.29 acres of impervious road bridge decking and roadway. Table 2 provides a summary of the monitoring sites and StormFilter systems.

The Heritage Marketplace and Lake Stevens field evaluations involved 18 months of monitoring, providing sufficient TSS removal to support Ecology's basic treatment requirements for the StormFilter (SMI, 2004a; SMI, 2004b).

Table 2: Summary of field monitoring site conditions

Site Name	Location	WQ Flow Rate (cfs)	Specific Flow Rate (gpm/ft^2)	Unit Size (ft)	Media	No. of Cartridges	Site Description
Heritage Marketplace	Vancouver, WA	0.38	1	8 x 16	ZPG	23	Commercial
Lake Stevens	Everett, WA	0.17	1	6 x 12	ZPG	10	Roadway
Greenville Yards	Jersey City, NJ	0.90	2	8 x 18	Perlite	27	Commercial

New Jersey Field Evaluation

Greenville Yards (GYS) is a commercial warehouse complex in Jersey City, NJ. This complex generates runoff from over 10 acres of pavement and ultimately drains to the New York Harbor. As a regional boat, rail, and truck-shipping hub, this complex sees constant activity and receives heavy traffic. Table 2 provides a summary of the monitoring site and the StormFilter system.

Monitoring at the Greenville Yards Field Evaluation Project lasted for an 18-month period and involved the collection of 16 storm events representing 17.13 inches of precipitation (CONTECH, 2006a). The performance data collected provided sufficient TSS removal to verify the overall performance of the StormFilter.

Particle Size Distribution

Washington

Ecology defines TSS as sediment less than 500 microns measured by the Suspended-Sediment Concentration method (ASTM 3977-97), and it is referred to as TSS-WA. Ecology's laboratory testing standard uses Sil-Co-Sil-106, a manufactured silica sand, as the benchmark for evaluating a silt loam texture. The particle size distributions at these field monitoring sites are representative of the high silt content of stormwater runoff (silt loam) that is characteristic of the Pacific Northwest (SMI, 2004a; SMI, 2004b) (Figure 1).

New Jersey

New Jersey uses EPA Method 160.2 to measure TSS. Particle size distribution was evaluated in order to verify that the suspended solids collected at the Greenville Yards monitoring site were representative of the soils characteristic of New Jersey (Figure 1) (NJDEP, 2006). Based upon the average of three separate assessments, solids were characterized as a sandy loam texture, with a sand, silt and clay distribution of 59%, 34% and 7%, respectively (CONTECH, 2006b).

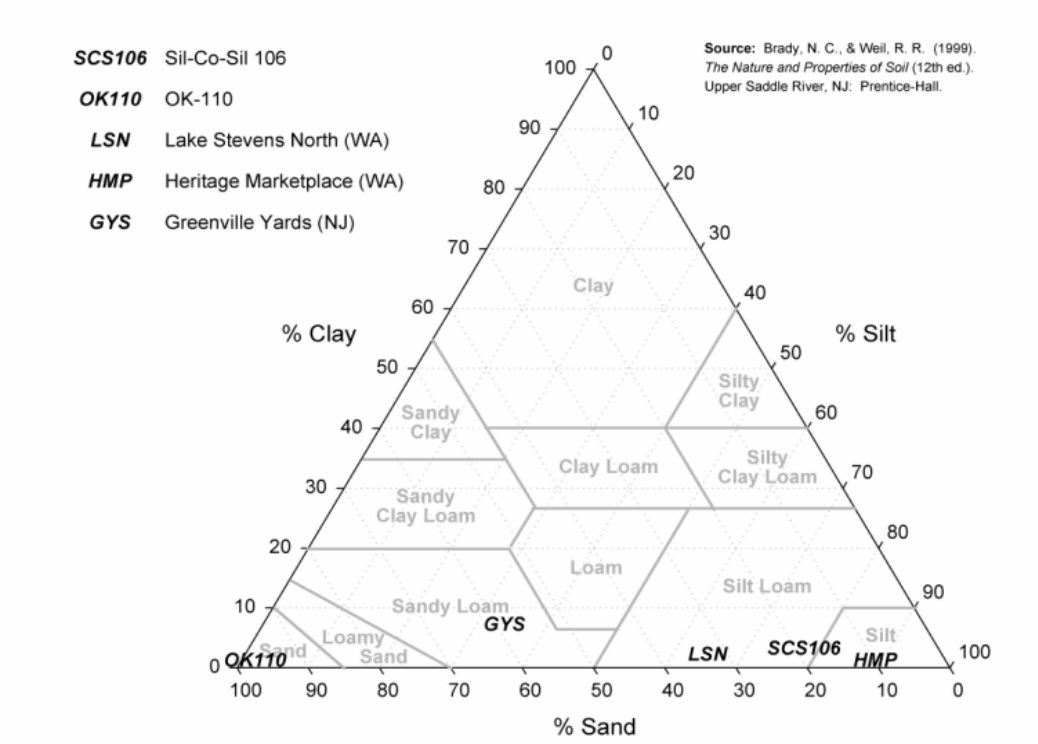

Figure 1: Ternary plot of sediment textures.

Summary of Performance

The performances of the StormFilter in field evaluation programs in Washington and New Jersey are summarized below (Table 3). The StormFilter installations met the performance goals for soils of a silt loam texture operating at 1 gpm/ft^2 and of a sandy loam texture operating at 2 gpm/ft^2. Storm events with influent EMCs greater than 100 mg/L exceeded the performance goal of 80% TSS removal at each field evaluation site. For influent concentrations less than 100 mg/L, an effluent goal of 20 mg/L was satisfied.

Conclusion

Different land use types and rainfall distributions require different stormwater treatment technologies to protect water quality and meet local regulatory requirements. The StormFilter was evaluated at commercial and roadway sites in a Type IA rainfall distribution in Washington. In New Jersey, field evaluation was conducted at a commercial site in a Type II rainfall distribution. TAPE and TARP Tier II technology certification programs determined the effectiveness of the StormFilter at removing suspended solids in stormwater. Because soil texture, land use, and rainfall characteristics vary, it is important to incorporate local and regional conditions into consideration when applying technology evaluation programs.

The TAPE and TARP Tier II certification programs defined the requirements for the StormFilter to achieve approval as a stand-alone BMP. The StormFilter has been evaluated in the field at varying operating rates, with different media, and under varying land use types and rainfall distributions. In Washington, the StormFilter systems met the requirements for TSS removal as defined by Ecology. In January 2005, Ecology issued the StormFilter a General Use Level Designation as a basic treatment device for TSS removal, operating at a specific flow rate of 1 gpm/ft2 (7.5 gpm per cartridge for an 18-inch cartridge) using ZPG™

(zeolite/perlite/granular activated carbon) media for a silt loam texture. In May 2007, NJDEP issued a Final Certification of the StormFilter system as a stand-alone system for TSS removal, operating at a specific flow rate of 2 gpm/ft2 (15 gpm per cartridge for an 18-inch cartridge) using perlite media for a sandy loam soil texture. NJDEP and NJCAT found the StormFilter field evaluations satisfied the TARP Tier II requirements.

Through the TAPE and TARP Tier II evaluation programs, the StormFilter is the first proprietary device approved as an effective, stand-alone stormwater BMP for TSS removal, and is the only manufactured BMP approved under both of these nationally recognized programs.

Table 3: Summarized performance for the StormFilter field evaluations in Washington and New Jersey. [1]

Field Evaluation Sites		
Site Description	**GYS**	**HMP and LSN (pooled data)**
Land Use	Commercial	Commercial and Roadway
Location	NJ	WA
Soil Texture	Sandy loam	Silt loam
Specific Flow Rate (gpm/ft²)	2	1
Qualifying Storm Events	*n* = 16	*n* = 22
Data Summary		
TSS Influent EMC	**Median Effluent EMC (mg/L)**	
< 100 mg/L	12	19
≥ 100 mg/L	25	33
	Suspended Solids Reduction (%)	
All	80*	82
< 100 mg/L	73	61
≥ 100 mg/L	82	89

***** NJCAT verified regression of EMC ($P < 0.001$)

[1] Raw data available from CONTECH Stormwater Solutions, 2007

References

CONTECH Stormwater Solutions, Inc. (2001). Sandy Loam TSS Removal Efficiency of a Stormwater BMP: Coarse perlite StormFilter Cartridge at 57 L/min (15 gpm) (Document PE-B023). Portland, Oregon: Author.

CONTECH Stormwater Solutions, Inc. (2004). Stormwater Management StormFilter Field Evaluation Project Plan: Greenville Yards Industrial Park. Portland, Oregon: Author.

CONTECH Stormwater Solutions, Inc (2006a). Greenville Yards Stormwater Treatment System Field Evaluation: Stormwater Management StormFilter with Perlite Media at 57 L/min/cart (Document PE-G080). Portland, Oregon: Author.

CONTECH Stormwater Solutions, Inc (2006b). Performance of the Stormwater Management StormFilter® Relative to Performance Claims for Suspended Solids with a Sandy Loam Texture. (Document PE-G091). Portland, Oregon: Author.

New Jersey Department of Environmental Protection (NJDEP). (2006). New Jersey Tier II Stormwater Test Requirements—Amendments to TARP Tier II Protocol. Trenton, New Jersey: Author. Available online: http://www.state.nj.us/dep/dsr/bscit/NJStormwater_TierII.pdf

Stormwater Management, Inc (SMI). (2004a). Heritage Marketplace Field Evaluation: Stormwater Management StormFilter with ZPG Media (Document PE-E081). Portland, Oregon: Author.

Stormwater Management, Inc (SMI). (2004b). Lake Stevens North Field Evaluation: Stormwater Management StormFilter with ZPG Media (Document PE-E012). Portland, Oregon: Author.

Technology Acceptance and Reciprocity Partnership (TARP). (2003). The Technology Acceptance Reciprocity Partnership Protocol for Stormwater Best Management Practice Demonstrations. Harrisburg, Pennsylvania: Author. Available online: http://www.dep.state.pa.us/dep/deputate/pollprev/techservices/tarp/pdffiles/Tier2protocol.pdf

Washington State Department of Ecology (WADOE). (2004). Guidance for Evaluating Emerging Stormwater Treatment Technologies: Technology Assessment Protocol—Ecology (TAPE) (Publication Number 02-10-037). Olympia, Washington: Author. Available Online: http://www.ecy.wa.gov/biblio/0210037.html

Parameter Brief

Total Suspended Solids (TSS) Removal Using Different Particle Size Distributions with the Stormwater Management StormFilter®

Introduction

Total Suspended Solids (TSS) is commonly used in the stormwater industry as a surrogate pollutant and a measure of Best Management Practice (BMP) performance. Although a practical standard, it is becoming evident that the measurement of TSS can be complex. Historically, parameters such as particle size distribution and specific gravity have not been included as part of BMP performance due to the difficulty of measuring these parameters in the field. For example, in a situation where road-sanding material is being washed into a BMP, the removal of 80% of TSS is easily achieved as the majority of the mass of the particles is composed of large sand and grit particles with a high specific gravity. In other situations, the TSS particles are much finer and have lower specific gravity, such as runoff from parking lots and high travel roads that frequently have "gray" water resulting from suspensions of silts, tire and brake dust, and associated fractions of oil and grease at low concentrations.

TSS Definitions

CONTECH Stormwater Solutions Inc. (CONTECH) has been investigating various particle size distributions (PSDs) for BMP acceptance or verification for various agencies: Washington State Department of Ecology (Ecology), New Jersey Corporation for Advanced Technology (NJ CAT), New Jersey State Department of Environmental Protection (NJ DEP), City of Portland, OR Bureau of Environmental Services (BES).

Five different PSDs are presented in Table 1. These particle sizes consist of natural soils (sandy loam and silt loam), manufactured sediment (SIL-CO-SIL 106), and two protocols for evaluating stormwater (APWA and City of Portland BES). The StormFilter was tested with the natural soils and SIL-CO-SIL sediments (finer distribution than the APWA or BES protocols). PSD testing was predominantly conducted in the CONTECH laboratory using simulated stormwater in a TSS concentration range between approximately 0 – 350 mg/L.

CONTECH would recommend that a jurisdiction define TSS with a range of PSDs such as the sandy loam, silt loam, or SIL-CO-SIL 106 used in these laboratory investigations, as opposed to a uniform PSD (i.e. 80% removal of 125 microns). Manufactured sediments are commercially available and can easily be used in comparing different BMPs. The PSDs are idealized at a specific gravity of 2.65, while field studies by CONTECH clearly show a high fraction of the TSS as organic in texture (seasonally) with a specific gravity at approximately 1.0. Investigations by CONTECH show that PSDs in the Pacific Northwest tend to be characteristic of silt loams and PSDs in the NE tend to be sandy loams or loamy sands, especially where road sanding is practiced.

Table 1 has a summary of various PSDs that have been investigated by CONTECH. For further information, Appendix A contains the graphical representation of each sediment type. Table 2 contains the TSS removal performance with these different sediments.

Table 1. Sediment Particle Size Distributions

Particle Size (microns)	Percent by mass (approximate)				
	Sandy loam [a]	Silt loam [a]	SIL-CO-SIL 106 [b]	APWA 1999 Protocol [c]	Portland BES [c]
500 – 1000	5.0	5.0	0	20.0	10.0
250 – 500	5.0	2.5	0	10.0	10.0
100 – 250	30.0	2.5	0	35.0	25.0
50 –100	15.0	5.0	20.0	10.0	25.0
2 – 50	40.0	65.0	80.0	25.0	30.0
1 – 2	5.0	20.0	0.0	0	0

[a] CONTECH tested Oregon silt and sandy loams for New Jersey Corporation for Advanced Technology verification of TSS performance claims.

[b] CONTECH tested SIL-CO-SIL 106 for Washington State Department of Ecology per the Technology Assessment Protocol – Ecology (2001).

[c] Hypothetical particle size distributions from these testing protocols. Particle sizes were presented in a range available in Appendix A; the table represents the least conservative (coarser) approximate particle size range.

Table 2. TSS removal using differing particle size distributions

Media Type	Cartridge Flow Rate (gpm)	Percent Removal (%)		
		Silt loam [a]	SIL-CO-SIL 106 [a]	Sandy loam [a]
Standard Perlite	15		72 – 78	77 - 80
Standard Perlite	7.5		78 – 83	
Coarse Fine Perlite	15			
Coarse Fine Perlite	7.5	68 – 75	79 – 82	
Fine Perlite	15		73 – 78	
Fine Perlite	7.5		85 – 88	
CSF® leaf [b]	15	68 – 79		
Coarse Perlite/Zeolite [c]	15	63 – 84		
ZPG™	15		80 – 82	
ZPG™	7.5		86 – 89	
Perlite/CSF® leaf	7.5		82 – 86	
Perlite/Metal Rx™	7.5		89 – 92	

[a] Linear regression was used in the data analysis, the table presents the upper and lower 95% confidence limits. Data was collected in the CONTECH laboratory using simulated stormwater for TSS concentrations between 0 – 350 mg/L. Silt and sandy loam performance data was NJCAT-verified.

[b] Performance of the CSF leaf media was tested using both field and laboratory investigations. Laboratory studies used a Palatine loam sediment. Field data is from the Pacific Northwest.

[c] Performance of the coarse perlite / coarse zeolite media was tested using a Palatine loam sediment. Reported in Total Suspended Solids Removal using StormFilter Technology.

References

American Public Works Association (APWA). (1999). Protocol for the acceptance of unapproved stormwater treatment technologies for use in the Puget Sound watershed. Washington: APWA Washington Chapter, Stormwater Managers Committee. Retrieved January 3, 2002 from the Municipal Research and Services Center of Washington website: www.mrsc.org/environment/water/water-s/apwa/protocol.htm

de Ridder, S. A., Darcy, S. I., and Lenhart, J. H. (2002). Silt loam TSS removal efficiency of a stormwater BMP: Coarse/fine perlite StormFilter cartridge at 28 L/min (7.5 gpm). (Report No. PD-01-001.1). Portland, Oregon: Stormwater Management Inc.

de Ridder, S. A., Darcy, S. I., and Lenhart, J. H. (2002). Sandy loam TSS removal efficiency of a stormwater BMP: Coarse perlite StormFilter cartridge at 57 L/min (15 gpm). (Report No. PD-01-002.1). Portland, Oregon: Stormwater Management Inc.

New Jersey Corporation for Advanced Technology. (2002). NJCAT Technology Verification Stormwater Management, Inc. Bordentown, NJ: Author. Retrieved July 31, 2003 from: www.resourcesaver.com/file/toolmanager/O56F24106.doc

Portland Bureau of Environmental Services (Portland BES). (2001). Vendor submission guidance for evaluating stormwater treatment technologies. Portland, Oregon: City of Portland, Bureau of Environmental Services.

State of Washington Department of Ecology (WADOE). (2002, October). Guidance for Evaluating Emerging Stormwater Treatment Technologies: Technology Assessment Protocol—Ecology (WADOE Publication No. 02-10-037). Retrieved November 11, 2002 from: www.ecy.wa.gov/programs/wq/stormwater/newtech/02-10-037%20TAPE.pdf

Stormwater Management, Inc. (2004). Evaluation of the Stormwater Management StormFilter® cartridge for the removal of SIL-CO-SIL 106, a synthetically graded sand material: ZPG StormFilter cartridge at 28 L/min (7.5 gpm). (Report No. PD-04-006.0). Portland, Oregon: Author.

Stormwater Management, Inc. (2003). Influence of flow rate and media gradation on the cost-effective design of stormwater filtration best management practices for the removal of total suspended solids. (Report No. PD-03-006.0). Portland, Oregon: Author.

Stormwater Management, Inc. (2000). Total Suspended Solids Removal using StormFilter Technology. Portland, Oregon: Author.

Stormwater Management, Inc. (2005). Evaluation of the Stormwater Management StormFilter® cartridge for the removal of SIL-CO-SIL 106, a synthetically graded sand material: Perlite/CSF StormFilter cartridge at 28 L/min (7.5 gpm). (Report No. PE-05-002.0). Portland, Oregon: Author.

Stormwater Management, Inc. (2005). Evaluation of the Stormwater Management StormFilter® cartridge for the removal of SIL-CO-SIL 106, a synthetically graded sand material: Perlite/MetalRx StormFilter cartridge at 28 L/min (7.5 gpm). (Report No. PE-05-004.0). Portland, Oregon: Author.

CONTECH Stormwater Solutions, Inc. (2005). Evaluation of the Stormwater Management StormFilter® cartridge for the removal of SIL-CO-SIL® 106, a standardized silica product: Standard Perlite StormFilter cartridge at 28 L/min (7.5 gpm) (Report No. PE-05-013.0). Portland, Oregon: Author.

CONTECH Stormwater Solutions, Inc. (2005). Evaluation of the Stormwater Management StormFilter® cartridge for the removal of SIL-CO-SIL® 106, a standardized silica product: Standard Perlite StormFilter cartridge at 56 L/min (15 gpm) (Report No. PE-05-014.0). Portland, Oregon: Author.

Parameter Brief

Total Phosphorus Removal:
Comparing the Performance of the Stormwater Management StormFilter® and Sand Filters

Summary

Two media filters, the Stormwater Management StormFilter® (StormFilter) and sand filters were compared for the removal of total phosphorus. Nine different sites with 110 paired influent and effluent samples were evaluated. For the sand filter, 52 paired samples were retrieved from the International Stormwater BMP Database (BMP database) for five sites. For the StormFilter, 58 paired samples were analyzed from four peer reviewed and/or independent studies. Regression of Event Mean Concentration (EMC) results indicates that there was no statistical difference between the StormFilter (64% mean removal: 95% confidence limits 54% and 74%) and sand filter (67% mean removal: 95% confidence limits 52% and 83%) for the removal of total phosphorus.

Introduction

Total phosphorus (TP), expressed in milligrams/liter is the sum of particulate organic phosphorus, particulate inorganic phosphate, dissolved inorganic phosphorus (ortho-phosphate), and dissolved organic phosphorus. Organic phosphates are a part of plants and animals, their wastes or decomposing remains. Inorganic phosphate originates from decomposing mineral materials and man-made fertilizer products. TP concentrations in stormwater are variable but range from 0.01 to 7.3 mg/L (Minton, 2002).

Removal of phosphorus can be accomplished by three mechanisms. The first is removal of organic and inorganic phosphorus associated with solids. The second is removal by biological uptake by plants or bacteria. The third is through chemical precipitation such as the reaction of ortho-phosphate with iron to form iron phosphate in aerobic conditions. Both the StormFilter and sand filters primarily remove TP by the removal of solids and can be amended with alternative media like iron to target ortho-phosphate.

Approach

Sand filter data were retrieved from the International Stormwater BMP Database (www.bmpdatabase.org) on September 30, 2005. A total of six sand filter investigations that included TP - all roadway sites - were available from the BMP Database. Only five sites were utilized in this comparison. One sand filter site (I-5/SR-78 P&R – Vista, CA) contained a large variance in data and demonstrated poor performance (-167% aggregate load removal) that was not consistent with the other investigations, and thus was omitted from the analysis. The only criterion for selection was paired influent and effluent samples with the assumption that the BMP database has screened and assured data integrity. The data set represents storm events that were sampled from April 1999 to May 2001.

Data used for the StormFilter were collected from four sites that have been either independently tested and/or peer-reviewed. The criteria used for StormFilter data selection was that a final,

completed evaluation report was issued as of October 1, 2005; all information has been peer-reviewed; and each investigation evaluated a stand-alone, flow-based StormFilter system using ZPG (Perlite/Zeolite/Granular Activated Carbon) or Perlite/Zeolite (PZ) media. Three investigations contained ZPG media, while one investigation contained PZ media. Only 5% by volume of the ZPG media contains granular activated carbon. Since 95% of ZPG and PZ media are the same, they were deemed comparable for the purpose of the analysis. The data set represents storm events that were sampled from November 2001 to March 2004.

The peer review entities and/or third party investigators with report titles were:

- NSF International in cooperation with U.S. EPA, Wisconsin Department of Natural Resources under the Environmental Technology Verification Program.
  - "Environmental Technology Verification Report. Stormwater Source Area Treatment Device. The Stormwater Management StormFilter Using ZPG Filter Media." NSF International, 2005.
- City of South Lake Tahoe in conjunction with the Tahoe Regional Planning Agency.
  - "StormFilter Performance Analysis prepared for the City of South Lake Tahoe, CA." 2nd Nature Environmental Science + Consulting, 2005.
- State of Washington Department of Ecology and APWA Surface Water Managers Technical Review Committee. Resource Planning Associates provided a Technical Engineering Evaluation Report regarding Quality Assurance/Quality Control and confirmed analysis in accordance with the Guidance for Evaluating Emerging Stormwater Treatment Technologies, Technology Assessment Protocol – Ecology (TAPE) for Basic Treatment.
  - "Heritage Marketplace Field Evaluation: Stormwater Management StormFilter with ZPG Media." Stormwater Managment Inc., 2004a.
  - "Lake Stevens North Field Evaluation: Stormwater Management StormFilter with ZPG Media." Stormwater Managment Inc., 2004b.

Table 1. General Site Description for the StormFilter sites

Location	Media	WQ Flow Rate (cfs)	Unit Size	No. of Cartridges	Surface Area of Media (ft^2)	Individual Cartridge Flow rate (gpm)	Site Description
Vancouver, WA	ZPG	0.50	8 x 16	23	168	7.5	Shopping Center
Lake Stevens, WA	ZPG	0.23	8 x 16	10	73	7.5	Roadway
S. Lake Tahoe, CA	PZ	1.65	CIP	50	365	15	Resort
Milwaukee, WI	ZPG	0.30	6 x 12	9	66	15	Roadway

Table 2. General Site Description for the sand filter sites

Location	Media	WQ Flow Rate (cfs)	Surface Area of Media (ft^2)	Site Description
Whittier, CA	sand	NA	291	Roadway
Escondido, CA	sand	NA	291	Roadway
Monrovia, CA	sand	NA	431	Roadway
Carlsbad, CA	sand	NA	776	Roadway
Norwalk, CA	sand	NA	614	Roadway

NA – Not Available

Site Description

Tables 1 and 2 provide summaries of the general site descriptions available for the StormFilter

and sand filter evaluated for the comparison. Limited information was available from the BMP database regarding the sand filters.

Data Analysis Method

Data were compared using Regression of EMC (REMC). Linear regression statistics similar to those suggested by Martin (1988) and URS et al. (1999) were used to estimate the mean TP removal efficiency. Instead of using calculated load values as suggested by Martin (1988), regressions were performed on EMC values alone so as to avoid any error associated with the storm volume data. REMC is a quantitative data analysis method that uses parametric statistics. REMC provides 95% confidence intervals and is more robust than using qualitative data analysis methods such as the Line of Comparative Performance, Discrete Removal Efficiencies, or Aggregate Load methods that can be subject to interpretation or require non-parametric statistical tools, such as a sign test. REMC analysis estimates the mean removal efficiency over a range of influent concentrations, and thus yields a continuous series of normal distributions. Resulting standard deviations can thus be used to statistically compare performance.

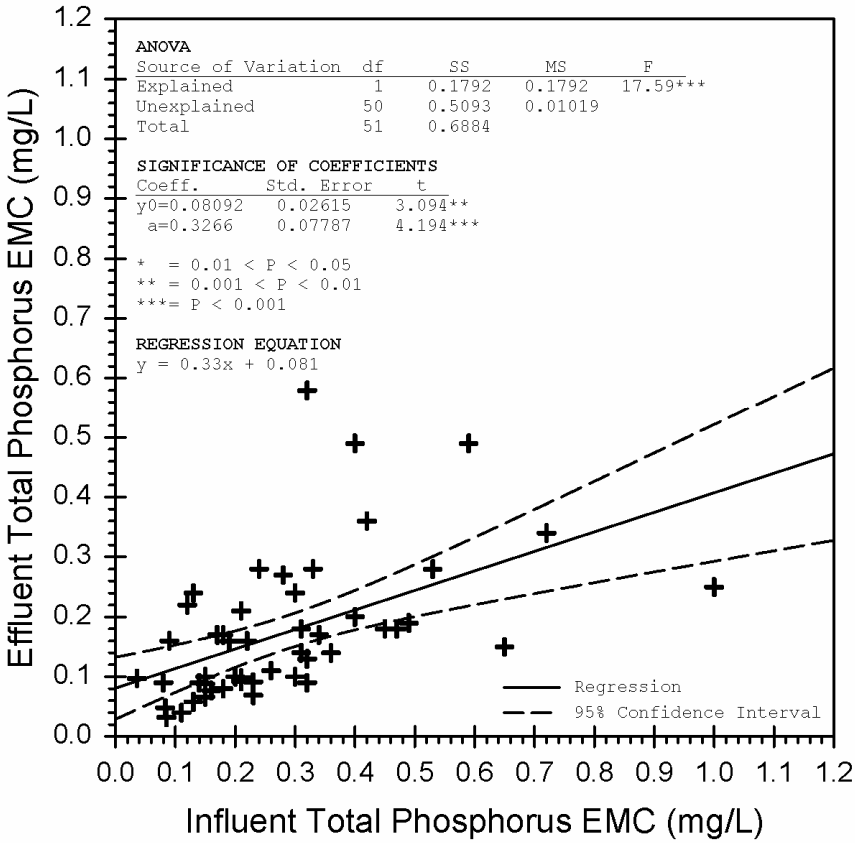

Figure 1. **Sand filter** data analyzed using Regression of EMC for Total Phosphorus (TP) removal representing 52 paired influent and effluent samples at 5 roadway sites and demonstrating a mean removal efficiency estimate of 67% with 95% confidence intervals of 52% and 83%. Data was statistically significant at the P <0.001 level.

Results

Figures 1 and 2, and Table 3 summarize the data analyzed using REMC. Figures 1 and 2 provide detailed statistical analysis. Table 3 provides general descriptive statistics. Both media filters had similar influent concentrations, with the sand filter data containing a higher median influent concentration (0.23 mg/L) than the StormFilter data (0.16 mg/L).

Figure 1 and Table 3 indicate that the performance of the sand filter for five roadway sites evaluated in California achieved a mean removal efficiency of 67% with 95% confidence intervals for the mean removal efficiency of 52% and 83%. A grand total of 52 storm events were sampled, and eight data points had an effluent concentration higher than the influent concentrations. The sand filter demonstrated a statistically significant removal (P<0.001; 99.9% probability of net removal) of TP.

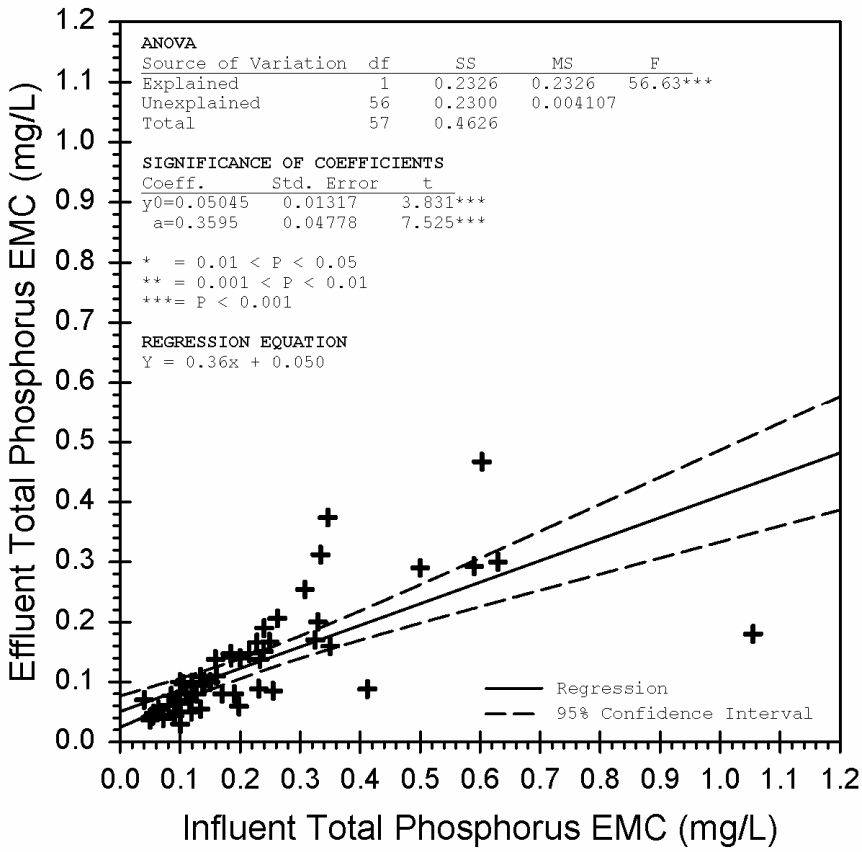

Figure 2. **StormFilter** data analyzed using Regression of EMC for Total Phosphorus removal representing 58 paired influent and effluent samples at 4 sites and demonstrating a mean removal efficiency estimate of 64% with 95% confidence intervals of 54% and 74%. Data was statistically significant at the P <0.001 level.

Figure 2 and Table 3 represent the StormFilter data using ZPG or PZ media at four sites for 58 storm events. The total phosphorus mean removal efficiency using linear regression was 64% with 95% confidence limits of 54% and 74%. Two data points that were included in the analysis had effluent concentrations greater than the influent concentrations. Overall the StormFilter system demonstrated statistically significant removal (P<0.001; 99.9% probability of net removal) of TP.

In Figure 3, StormFilter and sand filter data were compared using the estimated mean and standard deviation of the sample populations. When comparing these distributions, a one-tailed or two-tailed test is used to determine the cumulative probability of Type I and Type II errors (i.e. the probability of wrongly rejecting or wrongly accepting the null hypothesis) in the statistical analysis. In this instance, Figure 3 graphically demonstrates that the StormFilter data is 99.6% within the sand filter 95% confidence intervals. Thus, there is no significant difference (P=0.05) between the performance of the StormFilter and sand filter for total phosphorus removal.

Table 3. Total phosphorus removal statistical information for the StormFilter and sand filters. Sand filter data were retrieved from the International Stormwater BMP Database. StormFilter data were from four sites (Milwaukee Riverwalk, Ski Run Marina, Heritage Marketplace, and Lake Stevens) using ZPG or Perlite/Zeolite media.

	Descriptive Statistics				Regression of EMC			
Filter type	*n*	Range of Influent EMCs (mg/L)	Median Influent EMC (mg/L)	Mean Removal Efficiency Estimate (%)	95% Confidence Interval for the Mean Removal Efficiency Estimate (%)	Median Effluent EMC Estimate (mg/L)	95% Confidence Interval for the Median Effluent EMC Estimate (mg/L)
Sand Filter	52	0.04 to 1.00	0.23	67***	52 to 83	0.16	0.13 to 0.19
StormFilter	58	0.04 to 1.06	0.15	64***	54 to 74	0.11	0.09 to 0.12

*** = P < 0.001

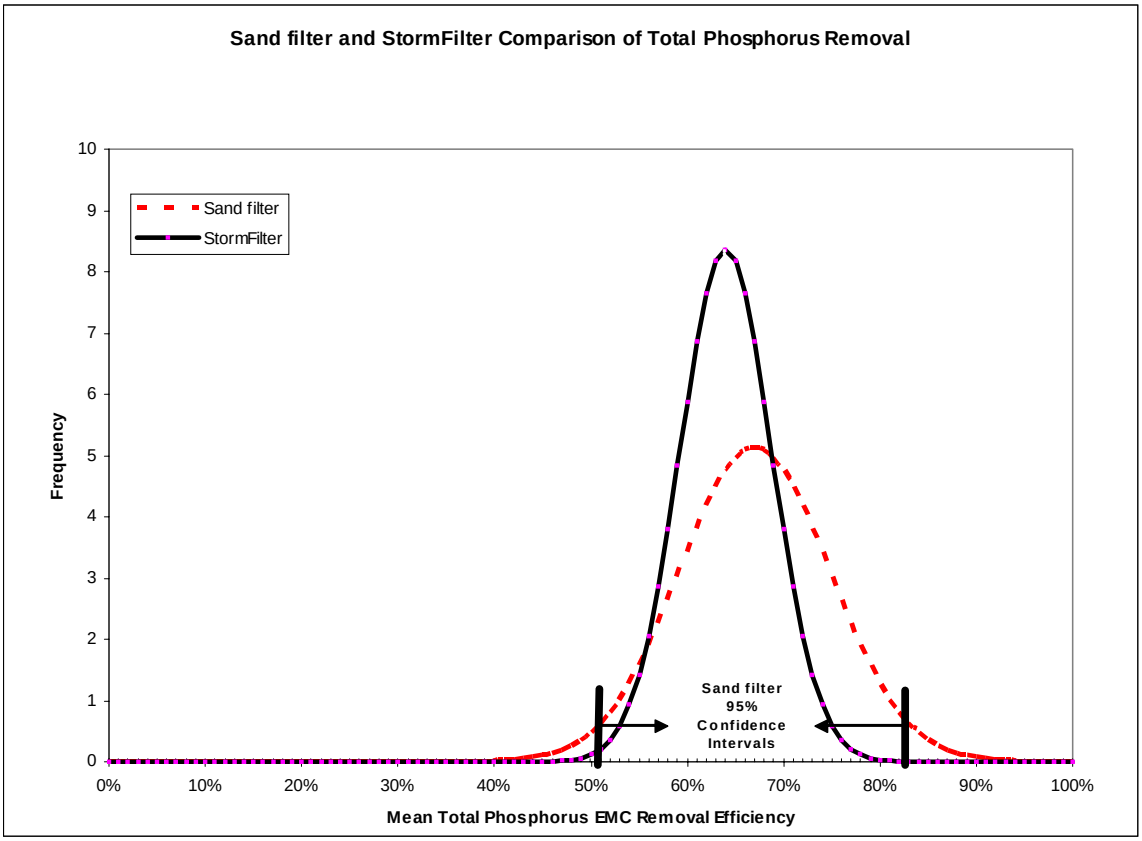

Figure 3. A comparative analysis of the StormFilter and sand filter data that displays the probability distribution of the mean total phosphorus removal performance of these two types of media filters. A total of 9 sites, each data set containing over 50 storm events were used in the comparison. The overlap of the two bell shaped curves indicate that there is no statistical difference between the performance of the StormFilter and sand filters for the removal of total phosphorus.

Conclusion

Two media filters, sand filter and StormFilter, displayed similar TP removal performance when analyzing the data with REMC and comparing the standard deviation and the distributions of these sample populations. Although the sand filter demonstrated a higher mean (+3%) than the StormFilter, the StormFilter exhibited more precise range of performance (standard deviation (SD) = 10) than the sand filter (SD = 15). Therefore, these two media filters can be said to have equivalent performance for the removal of total phosphorus.

References

2nd Nature Environmental Science + Consulting. (2004). StormFilter Performance Analysis prepared for the City of South Lake Tahoe. Santa Cruz, CA. Author.

Martin, E. H. (1988). Effectiveness of an Urban Runoff Detention Pond - Wetlands System. *J. Environnemental Eng*. 114 (4), pp. 810 - 827.

Minton, Ph.D, PE., Gary. (2002). Stormwater Treatment: Biological, Chemical, & Engineering Principles. Resource Planning Associates. Seattle, WA.: Author.

NSF International. (2004). Environmental Technology Verification Report. Stormwater Source Area Treatment Device. The Stormwater Management StormFilter Using ZPG Filter Media. Report No. 04/17/WQPC-WWF; EPA/600/R-04/125. Milwaukee, WI.: Author.

Stormwater Management Inc. (2004a). Heritage Marketplace Field Evaluation: Stormwater Management StormFilter with ZPG Media (Report No. PE-04-008.0). Portland, Oregon: Author.

Stormwater Management Inc. (2004b). Lake Stevens North Field Evaluation: Stormwater Management StormFilter with ZPG Media (Report No. PE-04-001.1). Portland, Oregon: Author.

URS, Urban Drainage and Flood District, and Urban Water Resources Research Council of ASCE. (1999). Determining Urban Stormwater Best Management Practice (BMP) Removal Efficiencies. Task 3.1 - Technical Memorandum. Available on ASCE website: http://www.asce.org/pdf/task3_1.pdf. Washington, DC: Author.

Product Evaluation

Evaluation of the Stormwater Management StormFilter® system for the removal of total nitrogen:

Kearny Mesa Maintenance Station case study

Overview

This study summarizes the ability of a Stormwater Management StormFilter® (StormFilter) system installation to remove nitrogen compounds from stormwater runoff. Only limited data exist documenting the total nitrogen removal performance of the StormFilter system. Presently, the only study that has documented the total nitrogen removal of a StormFilter system over the course of multiple storm events is the California Department of Transportation 3-year study of the Kearny Mesa Maintenance Station (KMMS) site. The KMMS StormFilter system contains 79 coarse perlite/coarse zeolite cartridges operating at 15 gpm/cartridge and treats 1.5 acres of a road equipment maintenance facility. Based upon data collected between March 1999 and April 2001, total nitrogen removal is evident.

Background on Nitrogen

Nitrogen is a very dynamic and biologically important element. It is an integral part of protein, and thus is omnipotent in water bodies associated with biologically rich environments. Except for most saltwater ecosystems and some desert aquatic environments (environments that are nitrogen limited), nitrogen is usually present in quantities that exceed what is needed for biological productivity, allowing phosphorus availability to dictate productivity instead (phosphorus limited). Although it is possible for stormwater BMPs to demonstrate the removal of nitrogen compounds during an individual storm event, retention of nitrogen by these systems over time is a much more important issue (Scheuler, undated).

In chemical terms, nitrogen in stormwater is usually present in 2 forms: organic nitrogen and inorganic nitrogen. Total nitrogen encompasses the sum of these nitrogen compounds. Each of these forms of nitrogen is susceptible to different removal mechanisms, though removal can often be complicated by the transformation of one nitrogen compound into another following capture. Thus, in determining the nitrogen removal potential of a specific stormwater BMP, it is necessary to first understand the various nitrogen compounds and the mechanisms by which they can be removed from an aquatic system.

Organic nitrogen (organic-N) describes biogenic nitrogen compounds such as protein, urea, and nucleic acids. It can be measured by quantifying the total kjeldahl nitrogen (TK-N) content of a sample minus the ammonia-N concentration. TK-N assesses the ammonification potential of the nitrogen compounds in a sample and thus detects biogenic nitrogen as well as existing ammonia-N, hence the need to account for the pre-existing ammonia-N. Since bulk biological solids contain a substantial quantity of organic cellular material, the removal of such solids can result in the removal of some fraction of the nitrogen load encountered by a system. The removal of fine biological solids such as bacteria and cells, as well as the removal of dissolved organic nitrogen compounds such as urea and protein, is much more difficult and not easily accomplished through settling or screening. While per-storm removal is possible and documented, the challenge of removing solid-phase organic-N as solids from stormwater lies in preventing the digestion and eventual processing of this material into other, more difficult to remove, nitrogen compounds.

Inorganic Nitrogen (inorganic-N) is usually broken down into oxidized nitrogen compounds and reduced nitrogen compounds. These two types of inorganic nitrogen have very different characteristics.

Oxidized nitrogen compounds of importance in aquatic environments are nitrate-N (NO_3^--N) and nitrite-N (NO_2^--N). These are oxidized, anionic, inorganic forms of nitrogen that are highly soluble in water, with NO_3^--N being the predominant compound and NO_2^--N being an intermediate. These oxidized forms of nitrogen are the usual fate of other nitrogen compounds in aerobic aquatic environments such as stormwater runoff. The solubility and stability of these nitrogen compounds makes their removal a challenge, and the only high volume commercial process that is currently available for oxidized nitrogen removal is anaerobic digestion wherein denitrification (NO_3^--N → NO_2^--N → N_2 gas) is performed by specific anaerobic microbes—an intensive, controlled process. While these microbes are naturally occurring and probably present to some degree in most stormwater BMPs, their effectiveness is dependent upon basic environmental parameters such as temperature and oxygen content, making their effectiveness both random and seasonal.

Where nitrate-N and nitrite-N represent important oxidized, inorganic forms of nitrogen, ammonia-N is the most important reduced form of inorganic nitrogen. As with the oxidized forms of nitrogen, NH_3-N is highly water soluble. While most often referred to as ammonia-N, in solution it is most often present as ammonium-N (NH_4^+-N), though reference to ammonia-N will be continued in this document. Unlike the oxidized forms of nitrogen, NH_3-N is highly toxic and volatile, which makes it the nitrogen compound of most concern in aquatic ecosystems. In oxic, aquatic environments, NH_3-N is rapidly transformed into oxidized nitrogen via biochemical nitrification processes (NH_3-N → NO_2^--N → NO_3^--N). This is the primary mechanism utilized in aquaculture to address nitrogen toxicity issues, whereas nitrogen load issues are addressed through frequent water changes wherein water high in nitrogen is discharged and replaced with water with lower nitrogen concentrations. However, when water bearing NH_3-N is passed through a medium with cation exchange properties, both toxicity and load issues associated with NH_3-N can be addressed.

While the Stormwater Management StormFilter® (StormFilter) is susceptible to the same total nitrogen removal challenges (i.e. uncontrollable nitrogen transformations, sensitivity of biological natural attenuation functions to environmental conditions) encountered by engineered surface water ecosystems, it has some distinct advantages. The availability of cation exchange media, the dewatering characteristics of the system, and the physical removal of used cartridges and the associated captured materials from the site all provide the potential for the substantial reduction of the total nitrogen load of a system on an annual basis (assuming annual maintenance). Maintenance assures the true removal of the contaminants from a system since stormwater BMPs capture and store non-biodegradable contaminants such as metals, inorganic solids, and nutrients.

Unfortunately, evaluation of the total nitrogen removal capabilities of a stormwater BMP requires monitoring of all three nitrogen compounds discussed above for an extended period of time. All three compounds must be monitored because organic-N captured during one event may degrade into NH_3-N between events and gradually leave the system as NO_3^--N over the course of subsequent storm events. The need to track total nitrogen loads over time also makes extended monitoring imperative as the loss of previously captured nitrogen is a gradual process which is difficult to monitor if substantial data gaps exist. Conducting monitoring for an extended period of time will account for seasonable variables such as temperature, water chemistry, microbial activity, and nutrient loading, which all affect the biochemical transformation of nitrogen compounds and thus system performance.

Procedure

Monitoring data for this system is publicly available from the National Stormwater BMP Database (www.bmpdatabase.org) and was used to evaluate the total nitrogen removal potential of a StormFilter system.

Results

Using paired influent and effluent EMC data for TK-N and NO_3^--N obtained from the National Stormwater BMP Database, the performance of the system was summarized using the Regression of EMC method ($y_0 \neq 0$) (SMI, 2002). Unlike the Regression of Load method, the Regression of EMC method limits the incorporation of errors associated with flow measurement by assuming that influent volume equals effluent volume—a logical assumption for flow-through stormwater BMPs such as the StormFilter. Figures 1 and 2 illustrate the summarized removal efficiencies for TK-N and NO_3^--N, respectively. Based upon this data summarization method, mean TK-N removal efficiency demonstrated by the KMMS StormFilter system was 31% (P=0.05: L1=39%, L2=23%), and mean NO_3^--N removal efficiency was observed to be 21% (P=0.05: L1=39%, L2=4%).

Assuming that the NO_2^--N is either insignificant or accounted for (see Discussion), the TK-N and NO_3^--N EMCs can be combined to produce the total nitrogen EMC. Under this assumption, total nitrogen influent and effluent EMCs were calculated using the data presented in Figures 1 and 2. The extrapolated total nitrogen data is shown in Figure 3 and evaluated using the Regression of EMC method. It yields a mean total nitrogen removal efficiency of 27% (P=0.05: L1=35%, L2=18%).

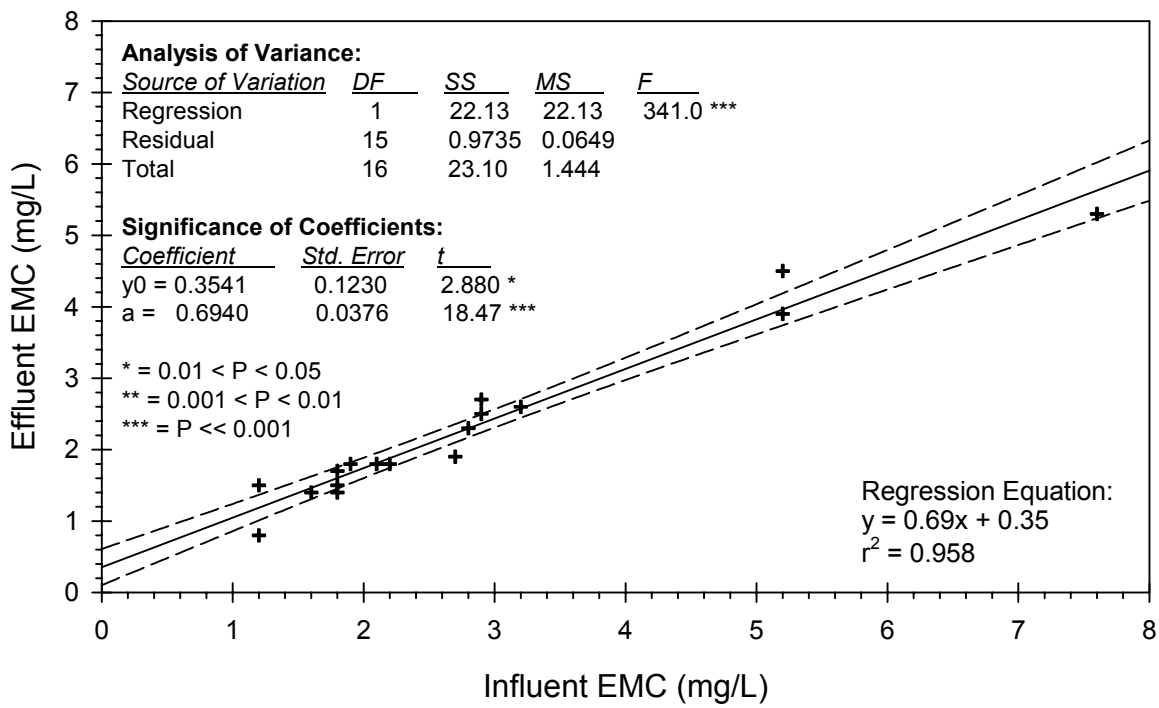

Figure 1. Total Kjeldahl Nitrogen (TK-N) EMC data for the KMMS StormFilter system with coarse perlite/coarse zeolite cartridges with a design flow rate of 15 gpm/cartridge. Using the regression of EMC performance evaluation method, TK-N removal is determined by subtracting the regression slope from 1 and thus estimated to be 31% (P=0.05: L1=39%, L2=23%).

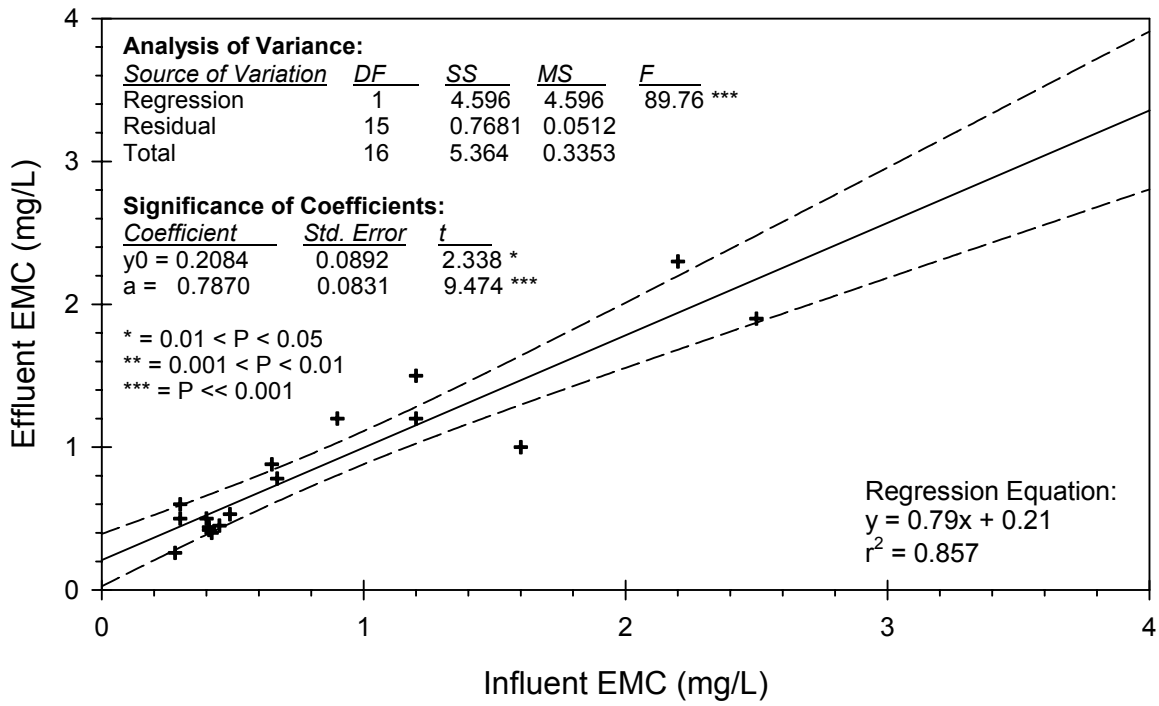

Figure 2. Nitrate Nitrogen (NO_3^--N) EMC data for the KMMS StormFilter system with coarse perlite/coarse zeolite cartridges with a design flow rate of 15 gpm/cartridge. Using the regression of EMC performance evaluation method, NO_3^--N removal is estimated to be 21% (P=0.05: L1=39%, L2=4%).

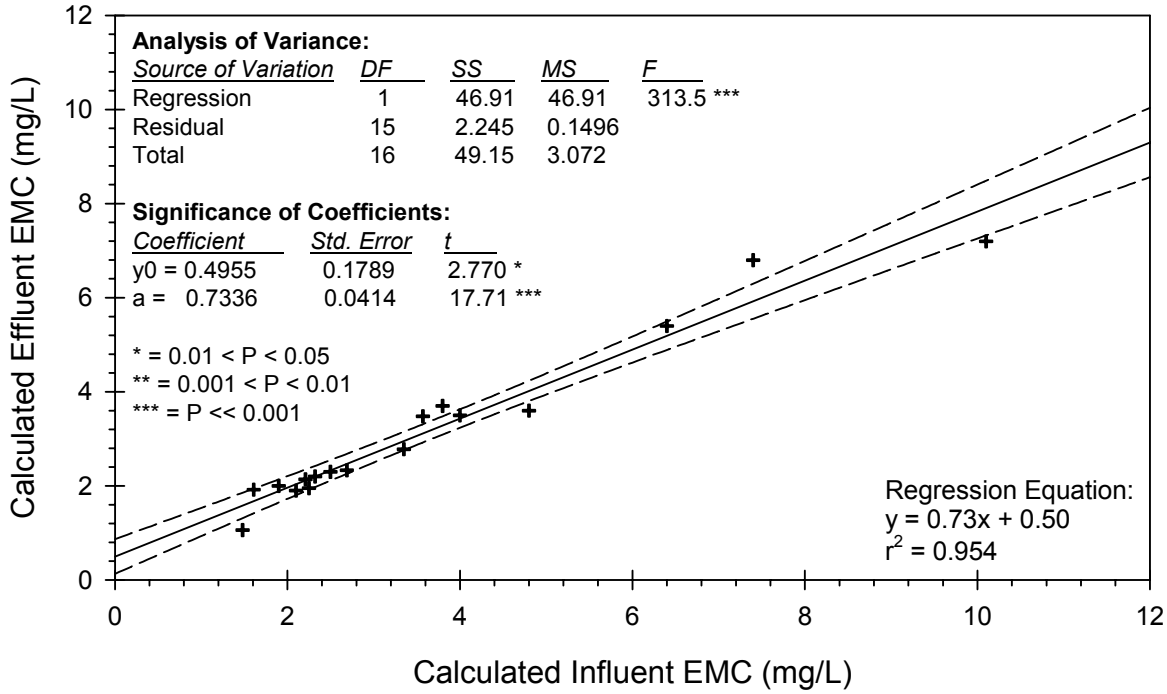

Figure 3. Total nitrogen EMC data extrapolated from available TK-N and NO_3^--N data for the KMMS StormFilter system with coarse perlite/coarse zeolite cartridges with a design flow rate of 15 gpm/cartridge. Using the regression of EMC performance evaluation method, total nitrogen removal is estimated to be 27% (P=0.05: L1=35%, L2=18%).

Discussion

The relationship observed between the influent and effluent EMC data shown in Tables 1, 2, and 3 is surprisingly linear considering the range of potential variables that affect system performance in the field. The validity of the linear relationships and the regression equations is verified by the very low probability ($P<<0.001$) of a type I error (the probability that the linear relationships are falsely identified and that no observable relationship exists). This suggests that as with the total suspended solids removal efficiency of the StormFilter, the TK-N, NO_3^--N, and possibly total nitrogen removal performance of the StormFilter is constant regardless of influent contaminant concentrations.

Though NO_2^--N concentration had to be assumed to be insignificant in order to extrapolate total nitrogen EMCs, the assumption has weight given the fact that NO_2^--N concentration is usually much less than NO_3^--N concentration. Thus an assumption was made in order to utilize the invaluable data provided by the KMMS StormFilter monitoring project. Other than NO_2^--N, all other important forms of nitrogen were accounted for.

Again, under the assumption that TK-N and NO_3^--N represent the bulk of total nitrogen load encountered by the KMMS StormFilter system, the positive TK-N and NO_3^--N removal performance demonstrated by the system indicates a net removal of part of the total nitrogen load to the system. Considering that biological denitrification is usually responsible for the removal of oxidized nitrogen in natural systems, this suggests that an underappreciated biological component was active within this engineered system. Much like the denitrification processes at work in the bed of a fluvial system, moist conditions, anaerobic microsites, and the ready availability of oxidized nitrogen may have sustained a population of denitrifying microorganisms within the system throughout its use. Considering the net removal of oxidized nitrogen from the system (between 4% and 39% with 95% confidence), and the absence of an intentional physicochemical oxidized nitrogen removal component from the StormFilter system, it can be said that the KMMS StormFilter system demonstrated some degree of biological denitrification throughout the 3-year monitoring period.

While the KMMS system did contain cation exchange media in the form of zeolite, the effectiveness of the media on NH_3-N removal could not be evaluated. The TK-N data includes, and thus accounts for, any NH_3-N present in the system; however, the fraction of TK-N present in the form of NH_3-N was not determined for influent/effluent sample pairs. Based upon the wide-spread, specific use of zeolite in the aquaculture industry for NH_3-N removal, it can be said that some of the TK-N removal demonstrated by the system was most likely due to the cation exchange media.

Conclusions

The analysis of 3 years of winter/spring monitoring data shows that the KMMS StormFilter system demonstrated a net removal of total nitrogen from stormwater originating from a road equipment maintenance facility. The total nitrogen removal efficiency of the system was estimated to be between 35% and 18% with 95% confidence.

The total nitrogen removal performance estimated by this study is thought to be conservative. This is based upon the observation that the bulk of the solids found within the KMMS system were observed to be organic, with recognizable leaf debris (Caltrans, 1999). It is impossible to account for the nitrogen load entering the system in the form of bulk leaf material using automated sampling equipment; however, this material eventually breaks down into smaller solids and even dissolved components that can easily be detected with automated sampling equipment upon leaving the system. Thus not accounting for this material on the influent end but accounting for it on the effluent end results in artificially depressed influent concentrations that negatively affect removal performance observations.

Considering the difficulty of accounting for nitrogen influx into a system in the form of bulk solids, as well as the potential environmental gains afforded by keeping bulk solids from degrading within a system, a very simple option may be exercised in the future. The screening

of bulk solids can be performed at the intake for the system (usually catch basins) or within the system itself. In the interest of both accurate monitoring of the system as well as maximum total nitrogen removal, these devices could be cleaned between monitoring events and the nitrogen content represented by the bulk debris could be quantified. The only drawback to this activity is that it increases both the frequency and level of maintenance required for the system.

Stormwater360, Stormwater Management Inc, and Vortechnics Inc. are now CONTECH Stormwater Solutions Inc.

References

California Department of Transportation, District 11 (Caltrans). (1999). BMP Retrofit Pilot Program, First Year 1998-1999 Report, Kearny Mesa Maintenance Station Stormfilter. San Diego, California: Author.

Stormwater Management Inc (SMI). (2002). Influence of analytical method, data summarization method, and particle size on total suspended solids (TSS) removal efficiency (Report No. PD-02-006.1). Portland, Oregon: Author.

Schueler, T. (undated). "Comparative Pollutant Removal Capability of Stormwater Treatment Practices." Technical Note #95. Watershed Protection Techniques, 2(4), 515-520. Retrieved September 18, 2002, from the Stormwater Manager's Resource Center website: http://www.stormwatercenter.net

THE REMOVAL OF SOLUBLE HEAVY METALS FROM NON-POINT SOURCE RUNOFF ORIGINATING FROM INDUSTRIAL SOURCES BY LEAF COMPOST MEDIA

James H. Lenhart, PE, Scott deRidder, Paula Calvert, Calvin Noling, PE

ABSTRACT

Total and soluble heavy metals such as copper and zinc can be found in significant concentrations in stormwater runoff from industrial sites such as shipyards, marinas, metal recycling facilities and mining areas. Frequently, the concentrations are high enough to exceed permit levels or exhibit toxicity characteristics.

Recent field tests and laboratory treatability studies by Stormwater Management (SMI) and others have demonstrated that pelletized leaf media made from composted deciduous leaves can frequently provide high levels of soluble metals removal and toxicity reduction.

The media was evaluated either in the field or the laboratory using the StormFilter cartridge. The cartridge utilizes a siphonic process to evenly distribute flows across the entire surface of the filter while providing sufficient hydraulic potential to cause a self powered surface cleaning mechanism when the siphon collapses.

Removal of soluble metals is primarily through cation exchange processes where less toxic “light metals” such as Na, Ca, Mg are displaced from negatively charged sites on the surfaces of the complex humic substances by heavy metals such as Zn, Cu, Pb, Cr, etc. With measured cation ion exchange capacities (CEC) of about 70 meq/100 grams the leaf media provides a lost cost media that can be ideal for stormwater filtration applications.

This paper summarizes a series of reports describing results of laboratory and field testing of leaf compost media to remove soluble copper and zinc from stormwater runoff. These studies include a large commercial shipyard in Southern California, simulated runoff from a boat yard in Oregon, and roof runoff from a metals plating facility in Oregon. In addition, data from the shipyard study show a significant decrease in toxicity. Mean removal rates are summarized below:

Site	Soluble Copper		Soluble Zn	
	Removal	Influent (ug/l)	Removal	Influent (ug/l)
Nassco Shipyard	54%	61-401	64%	191-124
Charleston Boatyard	49%	11,000 (Total)	48%	3,560 (Total)
East Side Plating	92%	58-268	43%	ND-569 (Total)

KEYWORDS

heavy metals, compost, cation exchange, filtration, stormwater, copper, zinc, shipyards, bioassay

1 INTRODUCTION

Soluble heavy metals such a copper and zinc can be found in significant concentrations in stormwater runoff originating from paved areas and roof tops. Land use clearly influences pollutant constituents and their concentrations. Runoff from industrial sites such as shipyards, marinas, metal finishing/plating facilities frequently contains pollutants that originate from their specific industrial activities. To compound this problem,

many waterways were historically used for materials transport or industrial waste disposal, resulting in the concentration of industrial development in environmentally sensitive areas.

Toxicity characteristics of metals in the aquatic environment is complicated by water chemistry. Parameters such as concentration, partitioning, valence state, pH, and hardness can impact the aquatic toxicity as well as the physical and chemical methods used to remove metals from water. Current USEPA guidelines for Critical Maximum Concentrations (CMC) are 4.8 ug/l for Copper in saltwater and 120 ug/l for zinc in freshwater. This assumes dissolved metals, 100 mg/l hardness, etc (USEPA, 1999).

The origin of heavy metals in the industrial environment is related to both common urban sources as well as process specific sources. Common urban sources include degradation of tires, automotive and machine part wear such as bearings, brake linings etc., oxidation of galvanized roofs and other corrosion resistant appurtenances. Industrial sources include exhaust from plating facilities, fugitive dust from grinding, coating and blasting operations. Despite source control efforts to reduce the exposure of these materials to non-point source runoff, many industrial facilities still have stormwater discharges that exceed permit levels or regulatory guidelines.

In many cases, it is necessary to provide some form of treatment mechanism within the drainage system to reduce the concentrations of metals to a regulated or acceptable level. This can be problematic in that these facilities are highly impervious and there are few technologies available that can provide for the uptake of soluble heavy metals while handling large volumes of water associated with rainfall runoff from such highly impervious large sites.

1.1 FILTRATION MEDIA CARRIER AND BODY

The Stormwater Management StormFilter® (StormFilter) was used for testing of the media. The StormFilter is a passive, flow-through, stormwater filtration system that improves the quality of stormwater runoff from the urban environment before it enters receiving waterways by removing non-point source pollutants. The StormFilter system is constructed in five basic configurations: pre-cast, linear, catch basin, cast-in-place, and corrugated metal pipe (CMP) form. The pre-cast, linear, CMP and catch basin models use pre-manufactured facilities to ease the design and installation process; cast-in-place facilities are customized for larger flows and may be either uncovered or covered underground units.

The typical facility as shown in Figure 1is composed of three bays: the inlet bay, the filtration bay, and the outlet bay (Figure 1). Stormwater first enters the inlet bay of the vault through the inlet pipe. Stormwater in the inlet bay is then directed through the flow spreader, which traps some floatables, oils, and surface scum, and over the energy dissipater into the filtration bay. Once in the filtration bay, stormwater begins to pond and percolates horizontally through the media contained in the cartridges (Figure 2). The treated water collects in the cartridge's center tube from where it is directed into the outlet bay by an under drain manifold. The treated water in the outlet bay is then discharged through the outlet pipe. In some applications where heavy grit loads are anticipated pretreatment by settling is recommended.

Figure 1: The Pre-cast 2.5 x 7 m StormFilter

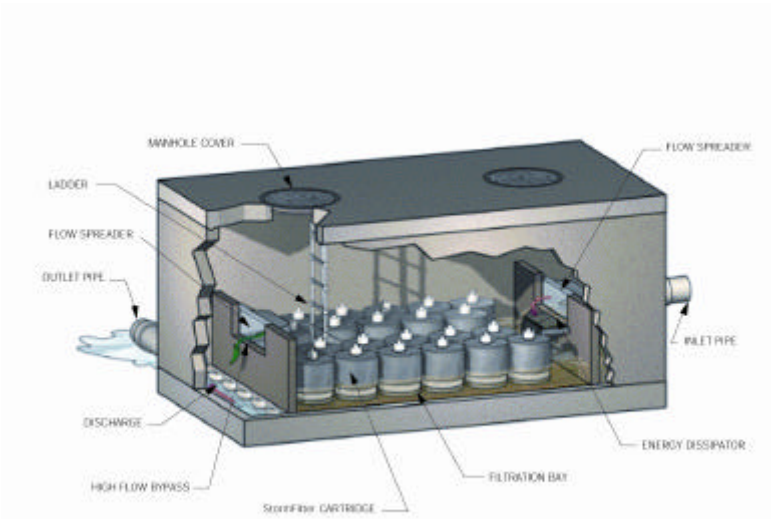

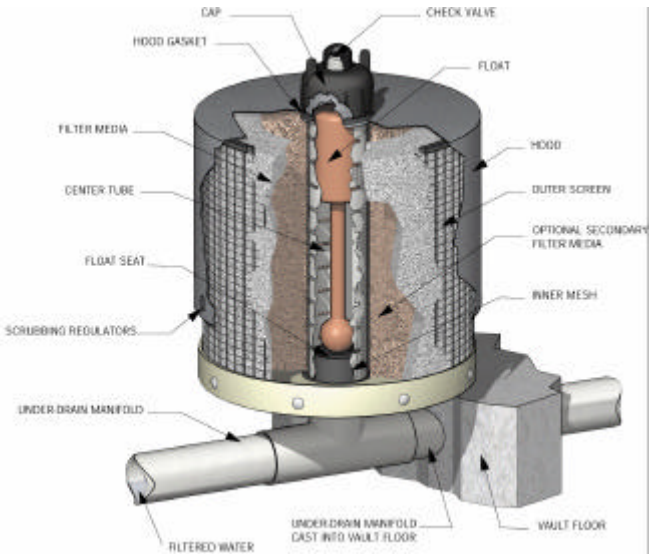

Figure 2: The StormFilter cartridge

The operation of the 50 cm high x 50 cm diameter cartridge is unique. Stormwater in the cartridge percolates horizontally through the filter media and passes into the cartridge's center tube, where the float in the cartridge is in a closed (downward) position. As the water level in the center tube continues to rise, the air in the cartridge is displaced and purged from beneath the filter hood through the one-way check valve located in the cap. Once the center tube is filled with water (approximately 45 cm from the base), there is enough buoyant force on the float to pop open and allow the treated water to flow into the under drain manifold. As the treated water drains, it tries to pull in air behind it. This causes the check valve to close, initiating a siphon that draws polluted water throughout the entire surface area of the filter.

This continues until the water surface elevation on the outside of the hood drops to the elevation of the scrubbing regulators. Inside the hood, a hanging column of water is created due to the closed check valve. At this point, the siphon begins to break and air is quickly drawn beneath the hood through the scrubbing regulators, causing energetic bubbling between the inner surface of the hood and the outer surface of the filter. This bubbling agitates the surface of the filter, releasing accumulated sediments on the surface, flushing them from beneath the hood, and allowing them to settle to the vault floor. This surface-cleaning mechanism maintains the permeability of the filter surface and enhances the overall performance and of the system.

1.2 LEAF COMPOST MEDIA

Photograph 1: CSF Leaf Media

Early research indicated that mature leaf compost had the ability to remove soluble heavy metals uptake through cation exchange processes (Stewart, 1993). Fallen deciduous leaves are composed primarily of cellulose and lignins. Early decomposition is by thermophilic bacteria and later by fungi and actinomycetes, which bio-degrade the feed stock into very stable humic substances.

Humic substances comprised of humic acids, fulvic acids and humins have the ability to complex metals through the process of cation exchange, chelation, and the formation of electrostatic bonds. Measured CEC's of mature leaf compost are approximately 70 meq/100 grams depending on the feedstock and processing.

Although most types of organic matter can be used to make compost, other constituents need to be considered as residual nitrates and ortho-Phosphorus can impair water quality. Compost from deciduous leaves naturally contains significantly lower levels of N,P and micronutrient metals such as iron and zinc since deciduous trees translocate nutrients out of the leaves and into the stems as a reserve for the next seasons growth flush.

In addition to the chemical aspects of the compost, the physical attributes need to be considered as well. Mature compost can have very low permeability characteristic and needs to be processed into a media which has uniform and reproducible permeability characteristics. The media used in these case studies, was processed by agglomeration to transform the compost into a uniform granular product. Though the use of granulated media allows for a higher degree of process control, this variable adds an element of design complexity. Basically, coarse media exhibits higher conductivity with lower removal performance while finer media has higher performance with lower conductivity. The challenge is to design a media that optimizes performance with respect to cost and the project treatment goals.

Another challenge of media design is adding resistance to environmental exposure. Stormwater is laden with bacteria, BOD, TSS, Nutrients and other pollutants that can easily impact the physical integrity of the media. For example, one media tried in the Pacific North West was made from processed paper pulp. In laboratory conditions the media is excellent for the removal of oils. However, once placed in a drainage system, the media would decompose within a few weeks, rendering it ineffective.

Media cost is also very important. Frequently the design life of the media is governed by the TSS loading characteristics rather than the CEC. Once loaded with solids and sometimes oils and grease, it is not practical to regenerate the media as is commonly done in industrial wastewater applications. Hence many of the commercial resins and other high performance media cost too much to be used on a practical basis for stormwater treatment.

2 LABORATORY STUDIES

There have been a significant number of laboratory studies on leaf compost media using artificial stormwater and actual stormwater runoff. A Study by SMI (SMI,2001) characterized both the TSS, Total Zinc, and soluble zinc removal characteristics of coarse and fine grain compost media. Results indicate strong relationships between influent and effluent concentrations and higher performance characteristics of finer grained media. Presented below is a summary of two similar studies using runoff generated from a simulated storm event and simulated stormwater.

2.1 CHARLESTON BOATYARD

Charleston Boatyard is a small ship building and repair facility located at the entrance to Coos Bay along the central Oregon coast. The 2 Ha Charleston Boatyard facility caters to commercial fishing trawlers, tugboats and larger pleasure vessels, and includes several businesses, tenant boat storage and work areas, two marine ways and a boat wash area. A few areas around the boatyard site and within Charleston Harbor adjacent to the boatyard were found to be contaminated with metals, poly-aromatic hydrocarbons and tributyl tin, largely from industrial activities conducted at the site prior to its occupation.

Photo 2: Charleston Boatyard

Influent and Effluent Sampling

A simulated stormwater runoff event was conducted at the site in September 2002 following a two-month dry period to allow performance evaluation of the StormFilter under first-flush loading conditions. Simulated stormwater runoff was generated in a section of Charleston Boatyard deemed representative of activities conducted at the site and subject to contact with stormwater. A total of three fanning sprinklers and one hose sprayed in the air were used to generate the simulated storm event. Care was taken to ensure that the hoses were not directly aimed into the catch basins. It took about 15 minutes for incipient runoff to reach the catch basins. A 200 liter sample volume was collected over a 20 minute period at the inlet of the StormFilter.

Photo 3: Laboratory Column Test Apparatus

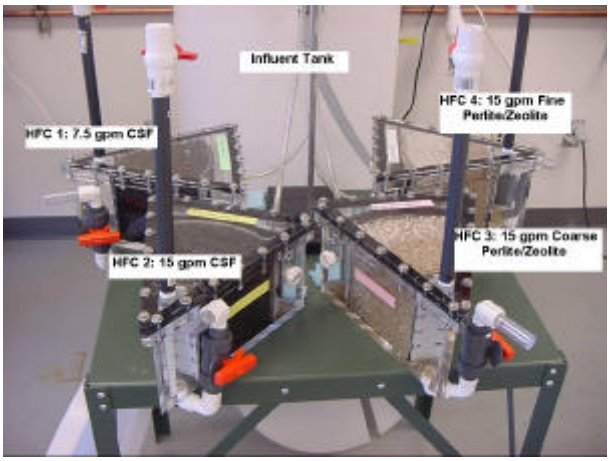

The samples were then transported to the wet lab, continuously stirred with a mixer and run through a series of horizontal flow columns shown in Photo 3.

Each column contained a trial media or represented a specific flow rate. The columns operate in a radial flow fashion under siphon acting as an equivalent 1/24 scale flow of an individual cartridge. Both influent and effluent samples were collected and analyzed. Results are provided in Table 1.

Table 1: Chaleston Boatyard –Performance Data

Parameter	Influent (mg/l)	Media-> Grade-> Spec. Flow Rate->	Configuration (Removal efficiency)			
			CSF Standard 15 gpm	CSF Standard 7.5 gpm	Perlite/Zeolite Coarse 15 gpm	Perlite/Zeolite Fine 15 gpm
Total Copper	11		42%	49%	41%	54%
Total Lead	0.096		43%	47%	42%	60%
Total Zinc	3.56		41%	48%	31%	51%
Total Chromium	0.0384		49%	61%	57%	67%

These comparative data show that factors such a media size and flow rate do influence performance. It is important to note however that halving the flow rate does not double the removal. A marginal 10% increase in removal is realized. This is fairly consistent with other technologies that show marginal increases in performance relative to substantial increases in the application of the technology. As expected, costs would increase exponentially as removal rates approach 100 %.

The removal rates are also somewhat lower than frequently encountered. This is probably due to higher TSS concentration of very fine particles. For filtration, as particle sizes decrease, removal effectiveness decreases. For the StormFilter it is estimated that at particles sizes of 10 um or less, removal efficiencies are not realized. Hence if the metals are bound to ligands, clays, and organic micelle, the CEC and complexing mechanisms are defeated and removal rates decline. The hardness of the water was also 420 mg/l.

2.2 PORT OF SEATTLE

Research was conducted by the Port of Seattle (Tobiason, 2002). The Port of Seattle tested four filtration media types in controlled laboratory experiments to determine their effectiveness for concurrent metals removal and toxicity abatement in synthetic stormwater. Amongst the media tested included leaf compost media. Up to three replicates per medium were tested using synthetic water at three different levels of zinc (concentrations ranging from 100-200 ppb, 250-500 ppb, and 800-1700+ ppb). Dissolved zinc fractions averaged 82% over the

concentrations tested. Toxicity was assessed using acute C. dubia (48 hr) bioassays. The leaf compost media removed up to 75% of the zinc and reduced toxicity significantly for influent zinc concentrations up to about 300 ppb zinc. Variations of the leaf compost media ("extra fine" and reduced flow rates) improved zinc removal modestly compared to the standard version. Based on these screening level results, the standard leaf compost media media qualified for onsite stormwater treatment BMP testing at the Seattle-Tacoma International airport.

Table 2: Summary Data for Soluble Zinc (Tobiason, 2000)

Media	IN	OUT	% Removed	% Survival
CSF	0.305	0.07	77	70
XFCSF	0.136	0.05	63	100
CSF	0.196	0.046	77	100
CSF @7.5	0.116	0.061	47	100
XFCSF	0.106	0.05	53	100
CSF	0.102	0.046	55	100
XFCSF	0.308	0.092	70	100
XFCSF	0.262	0.084	68	85
CSF@7.5	0.355	0.105	70	15
CSF	0.266	0.113	58	95
CSF	0.389	0.158	59	25
XFCSF	1.07	0.305	71	0
XFCSF	0.637	0.200	69	0
CSF@7.5	1.23	0.539	56	0
CSF	0.988	0.56	43	0
CSF	0.698	0.51	27	5
CSF	0.945	0.716	24	0

CSF = Leaf Compost media, XFCSF = Extra Fine Leaf Compost Media

Note: unless otherwise designated at 7.5 (0.5 l/sec) all tests were conducted at 15 (1 l/s)

Tobiason's work clearly shows an increase in performance with either finer media and/or reduced flow rates. Tobiason's work also reveals a toxicity threshold at 100 ug/l effluent is survival rates begin to drop. At 200 ug/l of soluble zinc the toxicity is acute with 0% survival. Tobiason also tested other media including one manufactured from processes soybean hulls, data from these test showed very high removal of soluble metals, however additional work on this media is needed due to very low pH observations and questions about how the media would fare over time in the natural environment.

3 CASE STUDIES OF FIELD APPLICATIONS

Though laboratory studies can reveal much about the expected performance of a system since they provide for better control of environmental variables, field studies are also needed to evaluate performance in a real and practical platform. The two case studies presented below provide data collected in the field from industrial applications.

3.1 NASSCO SHIPYARD

Nassco Shipyards is a large ship building and repair facility in San Diego California. In 1997, Hart Crowser conducted an AKART (all known and reasonable technologies) laboratory study of various stormwater filtration media (Hart Crowser, 1997). Findings from this study led to the design and installation of a demonstration project at Nassco using the StormFilter technology with the leaf compost media. The project consists of a 3.75 hectare catchment which discharges to a manhole equipped with a three way splitter. Flow from the splitter goes to three different vaults utilizing different gradations and flow rates. The objective was to evaluate the

treatment effectiveness of each combination to optimize the design to minimize costs while meeting the discharge limits dictated by their NPDES permit.

The treatment system combinations are:

1. T1 - Fine grained leaf compost (XFCSF) media at a design rate of 28 l/min/cartridge (42 l/min/m^2)

2. T2 - Standard gradation (CSF) at 56 l/min/cartridge/cartridge

3. T3 - Combined coarse on the outside, fine on the inside at 28 l/min/cartridge

These systems operated for a period of two years without maintenance during which four events were sampled, the first being an artificial storm. The systems were maintained in early 2003 after which four additional storms have been captured. Relative removal for total and dissolved copper and toxicity data are provided in Table 3.

The permit requirements state that there must be a survival rate of 70% or greater at least 90% of the time using acute effluent bioassay tests. The permit also requires that the systems treat the runoff from the first 6.4 mm (0.25”) of rainfall which was defined to be the first flush. The report, completed in June 2002 concluded that this filtration approach was able to meet the toxicity levels required by the NPDES permit and that the system was more cost effective than standard chemical treatment.

Photo 4: Nassco Shipyard – Influent Sample Bottles

Effluent data from a fourth storm were collected in December of 2002. Survival percentages had dropped to 65% for T1 and 50% for T2 indicating that the uptake capacity of the media was exhausted after a two year period of operation. The systems were maintained in January 2003 and then equipped with automated samplers to collect additional flow weighted data. Since the systems were maintained, more recent storms show a survival of 90% or greater for all three trials. This clearly indicates the importance of facility maintenance and that metals uptake has a direct impact on toxicity.

It is interesting to note the high fraction of dissolved metals relative to total metals. One reason for this is that the shipyard very aggressive at source control measures including sweeping. Hence larger particles that can transport particulate phase metals are frequently removed by sweeping. This is also evidenced by an average TSS removal rate of 55% which is attributed to a very fine particle size distribution.

Table 3: Nassco Shipyard – Summary Data

Sample Type	Storm Date	Cu total in	Cu total out	Removal	Cu Dissolved In	Cu Dissolved Out	Removal	% Survival
Influent	9/1/2001 FF	0.401			0.397			80
T1	9/1/2001 FF	0.401	0.145	0.64	0.397	0.142	0.64	100
T2	9/1/2001 FF	0.401	0.155	0.61	0.397	0.053	0.87	95
T3	9/1/2001 FF	0.401	0.094	0.77	0.397	0.087	0.78	95
Influent	9/1/2001 WS	0.061			0.053			NA
T1	9/1/2001 WS	0.061	0.021	0.66	0.053	0.013	0.76	NA
T2	9/1/2001 WS	0.061	0.025	0.59	0.053	0.014	0.74	NA
T3	9/1/2001 WS	0.061	0.027	0.56	0.053	0.015	0.72	NA
Influent	March - 2002 A	0.159			0.092			50

T1	March - 2002 A	0.159	0.102	0.36	0.092	0.075	0.18	80
T2	March - 2002 A	0.159	0.106	0.33	0.092	0.072	0.22	90
T3	March - 2002 A	0.159	0.089	0.44	0.092	0.069	0.26	100
Influent	March - 2002 B	0.17			0.115			45
T1	March - 2002 B	0.17	0.127	0.25	0.115	0.086	0.26	65
T2	March - 2002 B	0.17	0.121	0.29	0.115	0.087	0.24	80
T3	March - 2002 B	0.17	0.078	0.54	0.115	0.069	0.40	95
Influent	Apr-02	0.244			0.179			20
T1	Apr-02	0.244	0.232	0.05	0.179	0.175	0.02	55
T2	Apr-02	0.244	0.203	0.17	0.179	0.164	0.08	40
T3	Apr-02	0.244	0.189	0.23	0.179	0.145	0.19	75

FF = First flush, WS = waning storm

As with the Tobiason data there is an indication that finer media operating a reduced flow rate lasted longer in terms of toxicity reduction. Even though the data are not as consistent as the Tobiason data, these results indicate that the T3 system provided the highest level of performance even though the T2 contained all fine media compared to the T3 system with had an outer layer of coarse media with an inner layer of fine media.

Data from continued automated monitoring of these facilities is continuing with published results anticipated in the summer of 2003.

3.2 EASTSIDE PLATING

Eastside Plating is small metal finishing and plating business in the Portland metropolitan area. A roof drain filter was installed to treat roof runoff from a galvanized roof surface. Influent and effluent samples were taken at the filter inlet and a tap at the filter outlet. The objective of the test was to evaluate both the removal effectiveness and the longevity of the filter. A total of 10 discrete samples show a mean removal rate of 43%, while data for copper show a mean removal rate of 92%

Photo 5: East Side Plating –Roof Drain Installation

This system was also evaluated using a peat based media resulting in an 82% removal rate of Zinc and 96% removal of Copper. Given an Oregon Industrial benchmark standard of 0.6 mg/l for zinc and 0.1 mg/l for copper part of the question becomes what type of media can be used.

For zinc, the compost media would exceed the limit at 0.79 mg/l but would meet the limit for copper. The peat based media would meet the requirement for both. Since the peat media is more expensive, another option would be to use a two stage filter to further reduce the effluent zinc concentration. This type of configuration is currently being tested at a galvanizing facility in San Diego which has installed two-stage filters.

Figure 1 – Metals Removal

Influent and Effluent Values

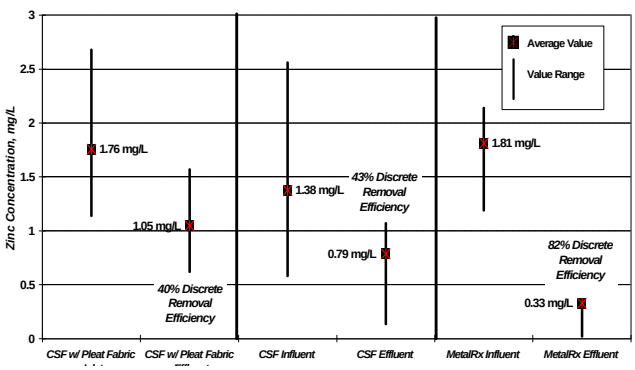

Figure 2 – Metals Removal

Means and Ranges

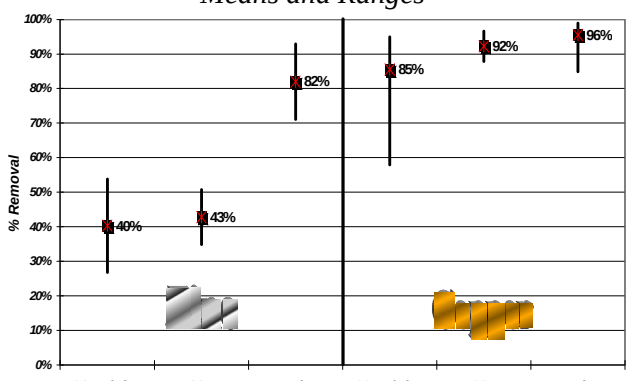

Table 4:

East Side Plating –Performance Data Total Zinc Removal

Date and Time	Influent Zn (mg/l)	Effluent Zn (mg/l)	% Removal
1/2/2003 18:30	1.08	0.625	42
12/30/2002 18:30	1.48	0.925	38
12/30/2002 18:30	0.892	0.558	37
12/27/2002 18:30	0.58	0.42	28
12/26/2002 18:30	2.56	0.714	72
12/26/2002 20:00	1.71	1.07	37
12/26/2002 21:30	0.98	0.70	29
12/13/2002 19:30	1.53	0.74	52
12/13/2002 18:30	1.52	0.782	49
12/13/2002 15:30	1.42	0.78	45

4 CONCLUSIONS

Repeated laboratory simulations, field simulations, and capture of actual storm events in industrial applications has demonstrated the ability of leaf compost media to provide for the uptake of heavy metals and reduce the toxicity of stormwater runoff. The major challenge is to gain a better understanding of what types of flow rates media and media gradation need to be used to meet the individual permit requirements for a particular jurisdiction.

In addition, due to the variable nature of runoff in terms of volume, peak flow, water chemistry and pollutant concentration, it is likely that some frequency of exceedence be acceptable. A likely consequence of requiring that a certain discharge be at or under permit levels 100 percent of the time will lead to costs that are not practical which frequently means that no practices are installed at all.

Maintenance of these systems is also being evaluated. Factors such as media costs, exhaustion of media by metals load vs. TSS, classification and disposal of the residuals all impact the life cycle costs of the system. If the media is not regenerated, it may be advantageous to use less effective media at slower flow rates such that metals concentrations in the residuals does not trigger a regulatory limit.

REFERENCES

Stormwater Management, Inc, (2001)Comparison of CSF and XFCSF StormFilter Cartridges for Zinc and Total Suspended Solids Removal, Stormwater Management Inc., Technical Update

USEPA, (1999) National Recommended Water Quality Criteria – Correction, USEPA 822-Z-99-001

Noling, Calvin,(2002) The Road to Environmental Performance: A Small Shipyards Experience, 2nd Annual Shipyard Environmental Issues Conference.

Minton, Gary (2002), Stormwater Treatment, 1st ed., Amica International,3.4, 64-68

W&H Pacific (1992), Compost Stormwater Treatment System, Final Report

Tobiason, Scott, et.al. (2002), Stormwater Metals Removal Testing at Seattle-Tacoma International Airport, Proceedings Water Environment Federation, Watershed 2002 Conference,

Hart Crowser,(2002) Final Report (Deliverable 5) Demonstration of Enhanced Filtration for Stormwater Treatment of Shipyard Stormwater San Diego, California, June 2002 7374-03

Hart Crowser,(1997) Shipyard AKART Analysis for Treatment of Stormwater, Final Report Prepared for Maritime Environmental Coalition, May 7, 1997

Parameter Brief

The Stormwater Management StormFilter® for Removal of Oil and Grease

Oils and Greases (O&G) are commonly found in stormwater runoff from automobiles and associated anthropogenic activities. O&G appears in many different forms in stormwater runoff: free, dissolved, emulsified, and attached to sediments. Total Petroleum Hydrocarbons (TPH) is the usual analytical measure of fuels, oils and grease (O&G) for stormwater. Typically the concentrations of TPH associated with runoff from streets and parking lots do not exceed concentrations that range from 2.7 to 27 mg/l (FHWA, 1996).

Frequently studies are conducted using high concentrations of oil, e.g. 5,000 mg/l in and 250 mg/l out, with claims of 95% removal. These concentrations are not representative of those associated with most stormwater runoff. In the event of these high concentrations, then an oil/water separation technology would be required as pretreatment.

Removal of TPH by media within the StormFilter cartridge is accomplished through adsorption. Adsorption is the attraction and adhesion of a free or dissolved contaminant to the media surface. This occurs at the surface as well as within the pores of the media granule. Adsorption requires that a contaminant come in contact with an active surface site on the media and time must be allowed for the contaminant to adhere. These reactions are usually promoted by polar interactions between the media and the pollutant. Adsorption can also occur within the dead end pores and channels of the media but is generally slower than a surface reaction due to limits of the contaminants diffusion into the pore. (Note: The contaminant's molecular size will limit diffusion in that the media's pore opening must be larger than the dissolved contaminant.) Commonly adsorbed pollutants include: gasoline, oil, grease, TNT, polar organics or organically bound metals and nutrients.

The media provided by CONTECH Stormwater Solutions Inc. for the removal of oils and grease are targeted to remove concentrations of 25 mg/l or less. Media promoting adsorption reactions are the CSF® leaf media, perlite, and granular activated carbon. For concentrations that continually are higher than 10 mg/l, an oil removing accessory such as a sorbent cartridge hood cover is recommended.

References

Center for Watershed Protection. (2000). A Periodic Bulletin on Urban Watershed Restoration and Protection Tools. Vol. 3, No. 3.

Federal Highway Association. (1996). Evaluation and Management of Highway Runoff Water Quality. Publication No. FHWA-PD-96-032.

Tenney, Sean, Michael E. Barret, Joseph M. Malina, Randall Charbeneau, George H. Ward. (1995). An Evaluation of Highway Runoff Filtration Systems. Technical Report CRWR 265. Center for Research in Water Resources.

A COMPARISON OF TWO MEDIA FILTRATION BMP TREATMENTS FOR THE REMOVAL OF PAHS AND PHTHALATES FROM ROADWAY RUNOFF

Carla Milesi, Taylor Associates, Inc., Seattle, WA
Scott A. de Ridder, Stormwater360, Portland, OR
Dana DeLeon, City of Tacoma, Tacoma, WA
Heidi Wachter, Taylor Associates, Inc., Seattle, WA

INTRODUCTION

Urban runoff is a major contributor to the degradation of our urban streams, rivers, and lakes (Pitt, 1995). Organic pollutants, such as PAHs and phthalates, in urban stormwater can contribute to receiving water degradation (EPA, 1983). A study in Rhode Island's Narragansett Bay watershed found that urban runoff accounted for 71 percent of the total inputs to the bay for higher molecular weight PAHs, and for 36 percent of the total PAHs (Hoffman et al, 1984). Testing done in 2003 by King County, the City of Seattle, and the City of Tacoma found high levels of phthalates in products such as brake pads and tires used in vehicles (King County et al, 2004 and City of Tacoma, 2005). In the Lower Duwamish Waterway in King County, Washington and in the Thea Foss Waterway in Tacoma, Washington these products are thought to contribute phthalates to surface waters by atmospheric deposition or direct deposition and stormwater runoff (King County et al, 2004). This contribution of PAHs and phthalates to our waters is a regional concern in Western Washington State if not a national and international concern.

Reducing the pollutant loading of phthalates and PAHs from automobile use can be extremely difficult. Therefore, the effectiveness of most stormwater control practices is dependent on their ability to remove pollutants from the water, and not through source reduction (Pitt, 2000). One stormwater pollutant removal technology, which can be incorporated into stormwater control practices, is the Stormwater Management StormFilter™ (StormFilter). This technology is a stand-alone stormwater treatment system that utilizes media filtration to remove contaminants, such as phthalates and PAHs, from stormwater.

The StormFilter is a flow-through stormwater filtration system consisting of a concrete vault, which houses filter cartridges filled with treatment media selected by the end user. The vault is composed of three bays: an inlet bay, filtration bay, and outlet bay. Stormwater enters the inlet bay, which is designed to settle out heavy solids, and is directed through a flow spreader, which traps some floatables, oils, and surface scum. As it leaves the inlet bay, stormwater flows over an energy dissipater and enters the filtration bay, where the media-filled StormFilter filtration cartridges are located. Once in the filtration bay, the stormwater begins to pond and percolate horizontally through the cartridges. The StormFilter utilizes a "siphon" system to pass flow through these cartridges. In the center of the cartridge, a float system is designed to prime a siphon that draws stormwater through the filtration media and into an under-drain. The treated stormwater in the under-drain discharges into the outlet bay before exiting the StormFilter vault through a single outlet pipe.

As part of the Tacoma Thea Foss Waterway Study, a StormFilter was used to assess the ability of different media mixes to remove phthalates and PAHs from stormwater in true, side-by-side fashion. The two media mixes contained different levels of bituminous granular activated carbon (GAC) to test the hypothesis that GAC enhances the removal of these anthropogenic organic contaminants. Testing was done using the discrete flow composite (DFC) method as outlined by the Technology Assessment Protocol - Ecology (TAPE) (Ecology, 2004), which specifies that sampling occur during periods when inflow to the treatment device is relatively constant (less than 20 percent variation of the median inflow). Testing of these two media mixes was conducted during 12 storm events between October 2004 and November 2005 at the Washington State Department of Transportation Lake Union Ship Canal Test Facility (Test Facility).

The Test Facility is located in Seattle, Washington in the Interstate Route 5 right of way beneath the north side of the Lake Union Ship Canal Bridge. The site contains four test bays to allow for the simultaneous testing of four ultra-urban stormwater treatment technologies. The drainage area to the site is approximately 33 acres and the land cover in the basin is predominantly pavement. Runoff from the drainage area is collected in catch basins and conveyed to Lake Union by a 30-inch pipe. Flow is diverted from the 30-inch pipe to the site using a "draw-bridge" half-pipe structure and is partitioned to the separate test bays using flow splitters and gate valves. A more detailed description of the Test Facility can be found in the EvTec Ultra-urban Stormwater Technology Evaluation, Stormwater360 StormFilter® Quality Assurance Project Plan (2005).

Individual StormFilter units are sized based on the anticipated inflow rates for a site. The StormFilter selected for evaluation at the Test Facility is a 6 foot by 12 foot vault containing 11 filtration cartridges. The cartridges are aligned in three rows, with four cartridges in each of the outer rows and three cartridges in the middle row. Each row of cartridges drains to a separate under-drain, which allows for each row of cartridges to be tested independently. At the start of the study two media mixes were selected for testing, a perlite/zeolite (PZ) mix and a zeolite/perlite/GAC (ZPG) mix. The PZ cartridges contained a 50/50 mix of perlite and zeolite in the inner core with an outer ring of perlite. The ZPG cartridges contained a 50/50 mix of zeolite and GAC in the inner core, with an outer ring of perlite. Early examination of water quality data collected during five initial storm events did not show a significant difference in the removal efficiencies for organics between the PZ and the ZPG media. Thus, in October 2004 the cartridges containing the PZ mixture were replaced with cartridges containing 100 percent GAC. This change was made to determine if an increased percentage of GAC in the media mix would lead to improved removal rates for organics. This paper focuses on the comparative ability of the ZPG and GAC media mixes to remove PAHs and phthalates.

METHODS

The side by side testing of the ZPG and GAC media mixes was conducted during 12 storm events between October 2004 and November 2005. To assess the average influent and effluent water quality, or mean concentrations (MCs), at specific inflow conditions, samples were collected using a DFC sampling approach over a relatively constant inflow period (less than 20 percent variation of the median flow) (EvTec 2001, Ecology 2004). The inflow rates that were sampled were 50 percent, 100 percent, and 125 percent of the filtration capacity of the StormFilter installed at the Test Facility. These target inflow rates encompassed the range suggested by the TAPE guidelines (Ecology 2004). When storm conditions allowed, two inflow rates were sampled during each storm event. This resulted in the collection of 23 paired influent and effluent stormwater samples for the two media mixes.

To perform the DFC sampling, flow into and out of the StormFilter unit was monitored using Palmer-Bowlus (P-B) flumes installed in the inlet and outlet conveyance pipes. Isco 6700 samplers with 730 bubbler modules were used to measure and record water level in the flumes, which was converted to flow using the rating curve supplied by the flume manufacturer. To monitor when and if flow was bypassed into the outlet bay without treatment by the filtration cartridges, an Isco 6700 sampler with 730 bubbler module was used to measure water level in the filtration bay.

Side-by-side testing of the media required the collection of one influent sample and two independent effluent samples (one from each media type). Influent samples were collected just upstream of the StormFilter's inlet pipe. Effluent samples were collected from the two separate under-drains, one draining from the ZPG cartridges and one from the GAC cartridges. Collecting effluent samples from the inside of the under-drain was necessary to isolate the effluent from each media type before they mixed in the outlet bay. This approach allowed for the comparison of the influent concentrations with effluent concentrations for each media type (zeolite/perlite/GAC and GAC).

Flow-weighted composite samples were collected using one Isco 6700 automated sampler for the influent and two Isco 6700 automated samplers for the two effluent samples. The influent sampler and a

primary effluent sampler were automatically triggered to collect samples based on flow volumes measured in the respective P-B flumes. The second effluent sampler was linked to the primary sampler using an Isco SPA 1026 cable which would trigger the second sampler to collect a sample simultaneously with the primary sampler. As recommended by TAPE (Ecology 2004), each composite sample was collected throughout a time period during which the volume of water passing through the unit was equal to or greater than eight times the StormFilter's detention volume. For the StormFilter, the detention volume is defined as the maximum storage volume between the inlet to the vault and the effluent sample location.

In accordance with TAPE protocols (Ecology 2004), all samples were collected through Teflon™-lined intake lines into 1-gallon glass jars with Teflon™-lined lids. This approach was used because these materials are known to be the most inert in terms of adsorption and desorption of organic compounds (CDOT, 2000). Sample bottles were cleaned by the analytical laboratory using a diluted sulfuric acid rinse followed by a deionized (DI) water rinse.

During the study period, equipment rinsate blanks were collected at the inlet sampler on three occasions. Each blank was collected by pumping DI water through the strainer and Teflon™-lined intake line into a clean 1-gallon glass sample bottle. Two blanks were collected at the start and one midway through the study. Blanks were collected to estimate bias, that is to determine if any of the sample containers, preservation methods, handling procedures, or sampling equipment contributed constituents to the sample. Field duplicates were collected at the inlet sampler during nine storms (ten percent of the total stormwater samples) and submitted blind to the laboratory to provide estimates of field variability.

RESULTS AND DISCUSSION

This study produced thousands of analytical results, the presentation of which would be far beyond the format of this document. The reader is encouraged to contact the Taylor Associates, Inc. authors for a copy of a final report for access to the full data set. A summary of influent mean concentration (MC) results for the data set used for analysis is shown in Table 1.

		Descriptive Statistics			ZPG Performance			GAC Performance		
	Analyte	*n*	Range of Influent MCs (µg/L)	Median Influent MC (µg/L)	Mean Removal Efficiency Estimate (%)	SE	95% Confidence Interval for the Mean Removal Efficiency Estimate (%)	Mean Removal Efficiency Estimate (%)	SE	95% Confidence Interval for the Mean Removal Efficiency Estimate (%)
	Total Suspended Solids	23	12.2 to 174	49.3	68***	7	54 to 83	73***	6	60 to 86
Poly Aromatic Hydrocarbons (PAHs)	Naphthalene	21	0.0180 to 0.175	0.0470	34***	11	12 to 57	47***	9	27 to 67
	2-Methylnaphthalene	20	0.0100 to 0.112	0.0260	28***	12	2 to 54	54***	11	29 to 78
	Acenaphthylene	10	0.0110 to 0.0180	0.0130	---	---	--- to ---	---	---	--- to ---
	Acenaphthene	11	0.0100 to 0.0860	0.0160	75*	8	56 to 94	---	---	--- to ---
	Fluorene	21	0.0130 to 0.591	0.0250	15***	6	3 to 28	60***	2	56 to 64
	Anthracene	18	0.0100 to 0.132	0.0155	---	---	--- to ---	68***	5	57 to 78
	Phenanthrene	22	0.0180 to 0.902	0.0990	33***	6	20 to 46	53***	4	44 to 62
	Fluoranthene	22	0.0450 to 0.955	0.178	44***	6	33 to 56	61***	5	51 to 71
	Pyrene	22	0.0570 to 1.08	0.248	52***	6	40 to 64	61***	5	50 to 72
	Benzo(a)anthracene	22	0.0130 to 0.591	0.0555	42***	8	26 to 58	62***	3	55 to 68
	Chrysene	22	0.0320 to 0.573	0.122	52***	6	40 to 63	63***	4	55 to 71
	Benzo(a)pyrene	22	0.0140 to 0.616	0.0565	38***	6	26 to 50	62***	3	55 to 69
	Benzofluoranthenes	22	0.0400 to 1.39	0.140	40***	6	28 to 51	61***	3	54 to 68
	Benzo(g,h,i)perylene	22	0.0260 to 0.419	0.100	41***	8	25 to 57	57***	6	44 to 69
	Indeno(1,2,3-cd)pyrene	22	0.0110 to 0.413	0.0440	33***	7	20 to 47	60***	4	52 to 69
	Dibenz(a,h)anthracene	16	0.0100 to 0.126	0.0175	36***	11	12 to 61	76**	8	59 to 93
Phthalates	Dimethyl phthalate	22	0.0180 to 0.150	0.0665	23***	10	2 to 43	35***	8	17 to 52
	Diethyl phthalate	12	0.250 to 0.690	0.380	---	---	--- to ---	---	---	--- to ---
	Di-n-butyl phthalate	12	0.240 to 0.550	0.360	---	---	--- to ---	---	---	--- to ---
	Butyl benzyl phthalate	12	0.260 to 0.850	0.430	---	---	--- to ---	81**	6	69 to 94
	Di-n-octyl phthalate	22	1.27 to 59.8	2.96	38***	12	13 to 62	52***	12	28 to 77
	bis(2-Ethylhexyl)phthalate	22	9.20 to 42.7	18.2	40***	11	17 to 64	54***	11	30 to 78

Table 1. Summary of influent observations and treatment performance. Descriptive Statistics include outliers. Asterisks indicate the significance of the underlying regression: * = 0.05 > P > 0.01, ** = 0.01 > P > 0.001, *** = P < 0.001. Regressions that were not significant at the 95% confidence level or better are indicated by "---". SE = Standard Error of the Mean Removal Efficiency Estimate.

Regression analysis was used to characterize the influent/effluent MC relationship for each analyte (univariate analysis). Since this relationship is a reflection of performance, it can be used to compare media treatments. Regression analysis is especially well suited for this purpose since it is more immune to the normality issues typical of water quality data and thus provides more meaningful statistics. An example of a single regression analysis is shown in Figure 1 with the result of all regression analyses shown in Table 1.

As is typical of water quality data, many suspected outliers were observed on the basis of their uncharacteristically high MCs (Figure 1) and had to be addressed prior to data analysis. Due to sample size and normality constraints, no conventional methods of outlier analysis could be employed (Robinson et al., 2005), thus to mitigate the effects of these outliers on data analysis, a systematic solution was employed. Given the healthy size of the data set, the data pairs with the highest influent and effluent MCs within the data set for each individual analyte were excluded from the analysis. This ensured that the most extreme outliers were excluded from analysis in a non-selective fashion.

Graphical presentation of the data shown in Table 1 highlights instances where a significant difference was observed between the two treatments. This is shown in Figure 2, where the dark bars represent the 95% confidence intervals for the performance of the baseline media (ZPG) and the light bars represent the 95% confidence intervals for the performance of the alternative treatment (GAC). The mean removal efficiency estimate for the GAC treatment is indicated by a horizontal bar, with a significant difference at the 95% confidence level indicated when the bar lies outside the 95% confidence range for the mean removal efficiency estimate of the ZPG treatment. A sense of statistical power can also be gained from the figures, with less overlap between confidence intervals indicating greater statistical power.

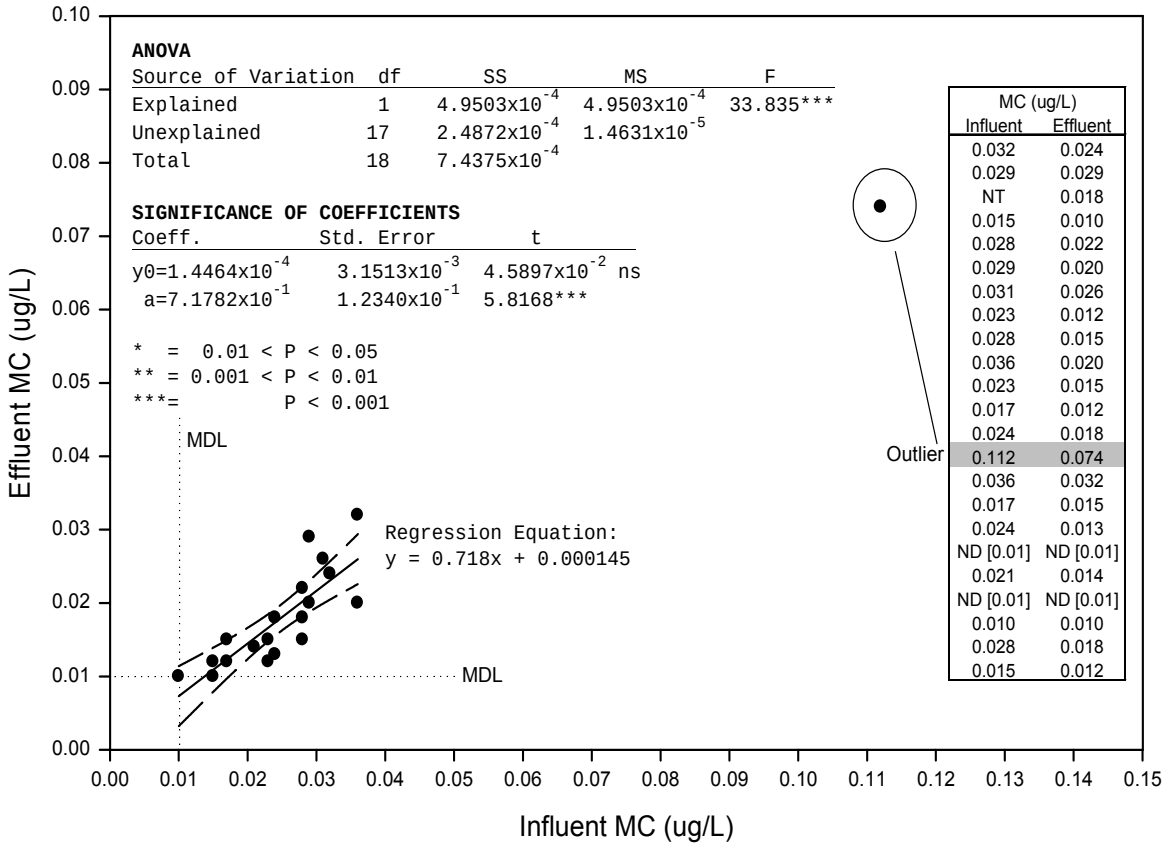

MC (ug/L) Influent	Effluent
0.032	0.024
0.029	0.029
NT	0.018
0.015	0.010
0.028	0.022
0.029	0.020
0.031	0.026
0.023	0.012
0.028	0.015
0.036	0.020
0.023	0.015
0.017	0.012
0.024	0.018
0.112	0.074
0.036	0.032
0.017	0.015
0.024	0.013
ND [0.01]	ND [0.01]
0.021	0.014
ND [0.01]	ND [0.01]
0.010	0.010
0.028	0.018
0.015	0.012

Figure 1. An example of regression analysis of the 2-Methylnaphthalene results for the ZPG data including the ANOVA table used to assess the significance of the regression and the error statistics of regression coefficients. Note that the indicated outlier is not included in the regression analysis (see Results and Discussion section). MDL = Method Detection Limit.

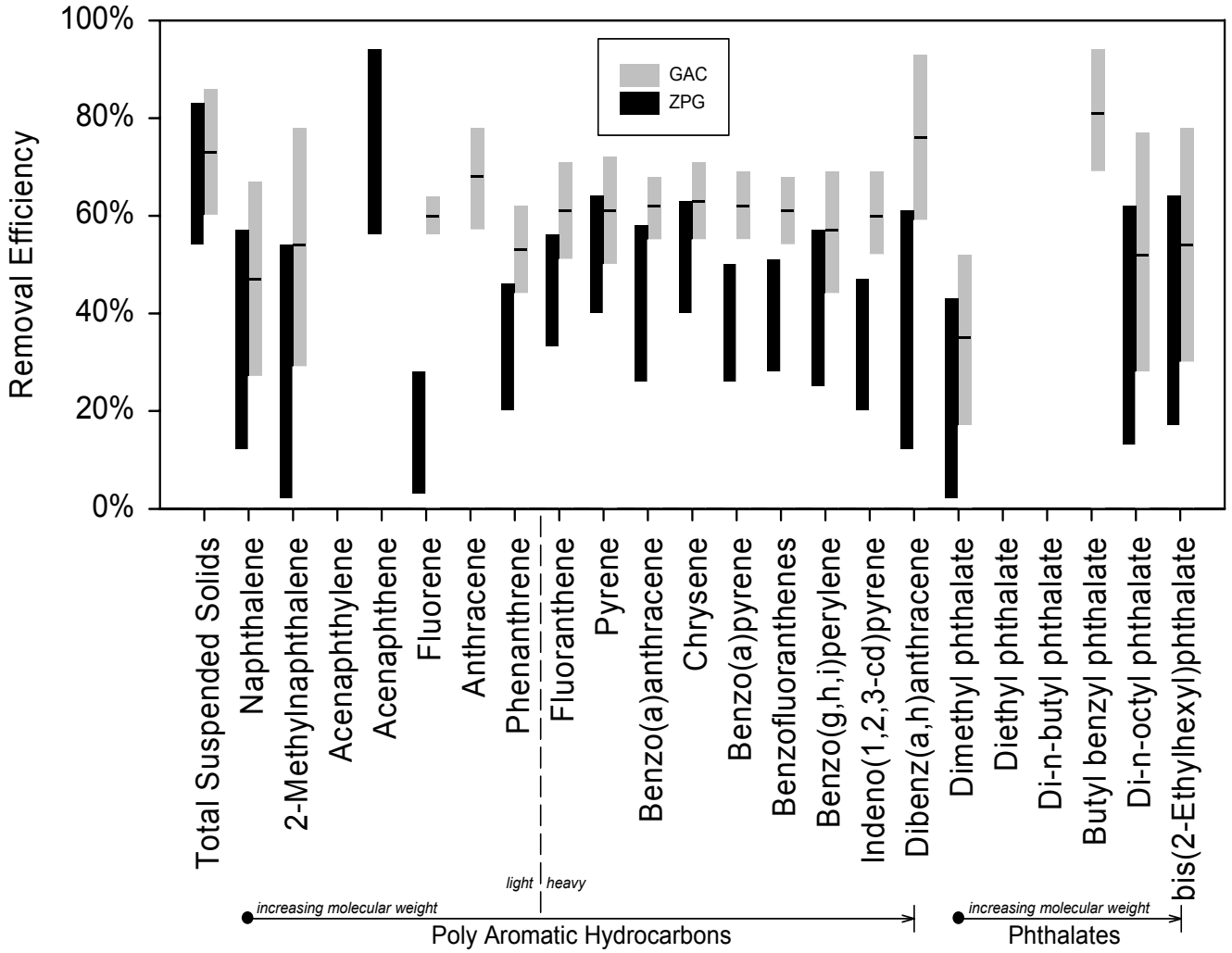

Figure 2. Graphical comparison of ZPG and GAC treatment performance. Absent bars indicate a regression that was not significant at the 95% confidence level or better.

CONCLUSION

Comparison of the two treatments suggests that the GAC treatment performed significantly (P=0.05) better than the ZPG treatment for many PAHs, with statistical power >80% observed for several analytes. On the other hand, no significant difference was observed between the two treatments for phthalates. While the variance of the observations was too great to allow the two treatments to be statistically distinguishable, removal of some phthalates was still observed to be significant at the 95% level.

While both media treatments appear to be capable of PAH and phthalate removal, GAC appears to be the better media for these contaminants. The observation of no significant difference (P=0.05) between the two media for Total Suspended Solids removal suggests that this difference is due in some part to the composition of the two media types as opposed to an artifact of improved suspended solids removal. This supports the hypothesis that the use of GAC enhances the removal of anthropogenic organic contaminants.

REFERENCES

City of Tacoma, 2005. 2003-2004 Stormwater Source Control Report, Thea Foss and Wheeler-Osgood Waterways, City of Tacoma, March 2005.

CDOT. 2000. Guidance Manual: Stormwater Monitoring Protocols, second edition. CTSW-RT-00-005. California Department of Transportation.

Ecology. 2004. Guidance for Evaluating Emerging Stormwater Treatment Technologies. Technology Assessment Protocol – Ecology (TAPE). Publication no. 02-10-037. Water Quality Program, Washington State Department of Ecology

EPA. 1983. Results of the Nationwide Urban Runoff Program. U.S. Enviornmental Protection Agency,Water Planning Division, PB 84-185552, Washington, D.C.

EvTEC. 2001. Environmental Technology Evaluation Center. EvTEC Evaluation Plan for Ultra-urban Stormwater Technologies. Prepared for: Washington State Department of Transportation. Prepared by: The Environmental Technology Evaluation Center and David Evans and Associates, Inc.

Hoffman, E.J., G.L. Mills, J.S. Latimer, and J.G. Quinn. 1984 "Urban runoff as a source of polycyclic aromatic hydrocarbons to coastal waters." *Environment Science and Technology*, 18:580-587.

King County and Seattle Public Utilities. 2004. King County And Seattle Public Utilities Source Control Program for the Lower Duwamish Waterway, June 2004 Progress Report.

Pitt, R., R. Field, M. Lalor and M. Brown. 1995. "Urban stormwater toxic pollutants: assessment, sources and treatability." *Water Environment Research*. Vol. 67, No. 3, pp. 260-275.

Pitt, Robert and Melinda Lalor. 2000. "The Role of Pollution Prevention in Stormwater Management." *Models and Applications to Urban Water Systems, Monograph 9.*

Robinson, R. B., C. D. Cox, and K. Odom. 2005. "Identifying Outliers in Correlated Water Quality Data." *Journal of Environmental Engineering*. pp. 651-657.

Taylor Associates, Inc. 2005. EvTec Ultra-urban Stormwater Technology Evaluation, Stormwater 360 StormFilter® Quality Assurance Project Plan.

Parameter Brief

Performance of the Stormwater Management StormFilter® for Removal of Bacteria

Microbial contaminants, generally referred to as bacteria, are frequently identified as a pollutant of concern and are common in stormwater runoff from both developed and undeveloped areas. Typically, fecal coliform is used as an indicator that enteric organisms may be present in the stormwater runoff and is used to set water quality standards. Human waste is a common source of fecal coliform; other sources include pets and urban wildlife, native wildlife in rural areas, and to a surprising extent, birds (Burton and Pitt, 2002; Crabill et al., 1999; Grant et al., 2001; Apicella, undated; WPT, 1999). The concentration of indicator microbial contaminants in urban stormwater is routinely measured in the thousands to tens of thousands of organisms per 100 mL range (Burton and Pitt, 2002).

Typical federal coliform standards for different water uses range from less than 14 MPN (most probable number) per 100 mL for shellfish beds to less than 200 MPN per 100 mL for water contact recreation. Studies have found that mean fecal coliform concentrations in stormwater runoff may well exceed 20,000 colonies per 100 mL (WPT, 1999). Given the concentrations of bacteria commonly found in stormwater, this could represent a required removal efficiency of 99.9% (WPT, 1999; NRDC, 2001). Fecal coliform levels may vary greatly depending on occurrences of dry weather flows, seasonal effects, and impervious cover. Effective reduction to meet federal regulations is best achieved through a technology such as ultraviolet disinfection, ozone disinfection or chlorination.

Filtration of Stormwater

Available research literature indicates that media filtration of stormwater can achieve a significant and reasonable level of bacteria reduction. Compared to other treatment technologies currently available, a media filter may be considered treatment to the "maximum extent practical".

Since media filters, including sand filters, have no astringent properties, the removal of fecal coliform is typically associated with the removal of total suspended solids (TSS). An article from Watershed Protection Techniques (1999) establishes a link between bacteria and sediment. This article suggests 50% of fecal coliform bacteria are attached or adsorbed to larger suspended particles in stormwater. These larger particles can then be settled or filtered out. In general, the article concludes that filters are very effective for removing bacteria associated with TSS.

The Stormwater Management StormFilter® is a passive, siphon-actuated, flow-through stormwater filtration system consisting of a structure that houses rechargeable, media-filled filter cartridges. The StormFilter has been demonstrated to be an effective BMP for the removal of TSS (WADOE, 2004). Hence, according to the research presented by Schueler, the StormFilter will provide a reasonable removal of bacteria.

It is important to note that sampling to determine the performance of stormwater BMPs

with regards to bacteria removal is quite challenging. To ensure minimal die-off of the organisms between sampling and analysis, sample hold times are very short (approximately eight hours). In addition, samples must typically be manual grab samples with sterile equipment. Finally, there is such high variability in the level of organisms in the influent and effluent flows that many samples are required to adequately characterize facility performance.

This combination of variability, sampling difficulties and required number of samples results in few field data or definitive reports on bacteria removal for any stormwater BMP.

Study Results

A laboratory study evaluating both bench scale and column tests of the CSF® leaf media demonstrated reasonable removals of both fecal coliform and E. coli. For the bench scale test, the media demonstrated removal efficiencies for fecal coliform on the order of 50 – 60% and for E. coli on the order of 65 – 75%. Column tests showed average removal for fecal coliform of 47% and E. coli of 30% (Roy, 1995).

In a California field study, the StormFilter using perlite/zeolite media achieved an average bacteria reduction of 47% even with a TSS removal of 50%, which is on the low end of the StormFilter performance scale (Caltrans, 2004). Bacteria reduction in future applications may be even greater if source controls such as street sweeping or removal of leaves and other organic matter upstream of the unit are provided. In addition, the StormFilter media-filled cartridges can be operated at lower cartridge flow rates to maximize contact time with the media and improve removal efficiencies. Finally, bacteria removals can be improved by ensuring complete drain down of stormwater devices between storms. This prevents mosquito breeding and eliminates putrefaction of collected pollutants, thereby limiting the availability of hosts for bacteria.

Conclusion

In conclusion, given the few data points and limited available literature, the StormFilter provides a level of bacteria removal consistent with other stormwater filtration systems.

References

Apicella, G. Undated. Urban runoff, wetlands and waterfowl effects on water quality in Alley Creek and Little Neck Bay. Online: www.stormwateresources.com/Library/071PLAlleyCreek.pdf

Burton Jr., G.A. and R.E. Pitt. 2002. Stormwater Effects Handbook: A toolbox for watershed managers, scientists, and engineers. Lewis, New York.

California State Department of Transportation (Caltrans). 2004. BMP Retrofit Pilot Program Final. Report ID CTSW-RT-01-050. Sacramento, CA.

Crabill, C., R. Donald, J. Snelling, R. Foust, and G. Southam. 1999. The impact of sediment fecal coliform reservoirs on seasonal water quality in Oak Creek, Arizona. Water Research, 33: 2163-2171.

Grant, S.B., B.F. Sanders, A.B. Boehm, J.A. Redman, J.H. Kim, R.D. Mrse, A.K. Chu, M. Gouldin, C.D. McGee, N.A. Gardiner, B.H. Jones, J. Svejkovsky, G.V. Leipzig, and A. Brown. 2001. Generation of Entercocci bacteria in a coastal saltwater marsh and its impact on surf zone water quality. Environmental Science and Technology, 35(12): 2407-2416.

Natural Resources Defense Council (NRDC). Undated. Testing the waters 2001: a guide to water quality at vacation beaches. Online: www.nrdc.org/water/oceans/ttw/chap1.asp

Roy, Steven. 1995. Stormwater Compost Filter Analysis – Bench Scale and Test Column Results. Burlington, Vermont.

Washington State Department of Ecology (WADOE). (2004). Draft General Use Level Designation For Basic (TSS) Treatment the Stormwater Management, Inc.'s StormFilter Using Zeolite-Perlite-Granular Activated Carbon Media And Operating at 7.5 GPM per Cartridge. The final can be retrieved after December 22, 2004 from: www.ecy.wa.gov/programs/wq/stormwater/newtech/media_filtration.html

Watershed Protection Techniques (WPT). 1999. Microbes and Urban Watersheds. Watershed Protection Techniques, 3(1): 551 – 596.

Watershed Protection Techniques (WPT). Undated. Comparative pollutant removal capability of stormwater treatment practices. Watershed Protection Techniques, 2(4): 515 – 520.