California Regional Water Quality Control Board
Santa Ana Region
3737 Main Street, Suite 500
Riverside, CA 92501-3348

December 19, 2001

ITEM: *6

SUBJECT: Waste Discharge and Producer/User Water Recycling Requirements for the Irvine Ranch Water District Michelson Water Reclamation Plant, Orange County, Order No. 01-95 (NPDES CA8000326)

DISCUSSION:

See attached Fact Sheet

RECOMMENDATION:

Adopt Order No. 01-95, NPDES No. CA8000326, as presented.

COMMENTS SOLICITED:

Comments were solicited from the following persons and agencies:

U.S. Environmental Protection Agency, Permits Issuance Section (WTR-5) - Terry Oda
U.S. Army Corps of Engineers, Los Angeles District, Regulatory Branch
U.S. Fish and Wildlife Service - Carlsbad
State Water Resources Control Board, Office of the Chief Counsel – Jorge Leon
State Water Resources Control Board, Division of Water Quality- James Kassel
State Water Resources Control Board, Division of Clean Water Programs - Lynn E. Johnson
State Department of Health Services, Carpenteria – John Curphey
State Department of Health Services, Carpenteria – Jeff Stone
State Department of Health Services, Santa Ana – Frank Hamamura
State Department of Water Resources - Glendale
State Department of Fish and Game - Long Beach
Orange County Water District - Nira Yamachika
Orange County Sanitation District - Robert P. Ghirelli
Southern California Association of Governments – Mark A. Pisano
South Coast Air Quality Management District - James Lents
University of California, Irvine - Bill Bretz
The Irvine Company – Sat Tamaribuchi
Orange County Public Facilities and Resources Department, Harbors, Beaches and Parks
Los Alisos Development Company
City of Newport Beach – City Manager
City of Irvine – City Manager
Defend the Bay – Bob Caustin
SPON – Jack Skinner
Susan Skinner Caustin
Orange County Coastkeeper – Garry Brown
Lawyers for Clean Water C/c San Francisco Baykeeper

California Regional Water Quality Control Board
Santa Ana Region
3737 Main Street, Suite 500
Riverside, CA 92501-3348

December 19, 2001

FACT SHEET

The attached pages contain information concerning an application for the renewal of waste discharge requirements and a National Pollutant Discharge Elimination System (NPDES) permit.

I. FACILITY DESCRIPTION:

The Irvine Ranch Water District (hereinafter IRWD or discharger) owns and operates the Michelson Water Reclamation Plant (MWRP). The MWRP treats wastewater that is generated in residential, commercial, and industrial areas within its service area. Wastewater flows within the service boundaries are generated in the following three main areas: the North Irvine tributary area; the South Irvine tributary area; and the Harvard Avenue Trunk sewer (HATS) area. Wastewater flows from the HATS area are currently conveyed to the Orange County Sanitation District (OCSD) facilities through the Main Street Interceptor. The majority of the flows to the MWRP come from the North Irvine Interceptor. Collected wastewater that is needed for water recycling is tertiary treated at the MWRP; the remaining wastewater is diverted to OCSD treatment facilities for treatment and disposal.

The facility location map is shown on Attachment "A1". Attachment "A2" shows the relationship of the reuse distribution system, the Michelson Water Reclamation Plant and the two storage reservoirs. The flow diagram for the wastewater treatment process is shown on Attachment "B". The schematic of the wastewater collection system is shown on Attachment "C".

The MWRP consists of the following:

1. The preliminary treatment process consists of flow equalization basins, screening by using mechanically cleaned bar screens and channel grinders and augers, and primary clarifiers.

2. Secondary treatment is by an activated sludge process that consists of aeration basins and secondary clarifiers, including partial denitrification using a methanol augmented anoxic zone at the head of the aeration systems.

3. Tertiary treatment consists of alum treatment of secondary effluent prior to filtration through rectangular, downflow, conventional dual-media filters, and disinfection by chlorination.

All waste sludge collected at the plant from the reclamation process, including grit that has settled out in the primary clarifiers, is pumped to OCSD facilities for final treatment and disposal.

The treatment, discharge and reuse of wastewater from the MWRP is currently regulated under Order No. 94-22 (NPDES No. CA8000326), which expired on September 1, 1999. Order No. 94-22 has been administratively extended until it is replaced by revised waste discharge requirements.

Tertiary treated wastewater from the MWRP is either distributed directly to recycled water users or discharged to either Rattlesnake or Sand Canyon reservoirs for storage prior to recycling within the discharger's service areas. Sand Canyon Reservoir was built by the Irvine Company in 1943 to capture runoff from a 6.5 square mile watershed for water supply purposes. In the late 1960's, IRWD bought Sand Canyon reservoir to store recycled water produced at the MWRP. Current storage capacity of the reservoir is 768 acre-feet. The Rattlesnake Reservoir was completed in 1959 and has a storage capacity of 1480 acre-feet.

During dry weather, when the recycled water demand is high, the discharger treats all the wastewater generated within its service area. To meet the demand for irrigation water during the dry season, the discharger supplements the recycled water with fresh water from local groundwater wells and Irvine Lake. Irvine Lake gets most of its water from the Colorado River and local runoff.

By agreement with OCSD, IRWD has acquired a capacity right of 32 MGD for treatment and disposal of wastewater at OCSD's facilities. During wet weather, when the demand for recycled water is low, untreated or partially treated wastewater is diverted to OCSD's facilities through the use of one or all of the following, depending on the volume and location of the wastewater to be diverted: a) collection system diversion structures; b) MWRP pumping stations; and/or c) process water storage and pumping. IRWD's wastewater diversion facilities include the necessary sensors, instruments, valves, and other devices to enable fully automatic diversion of wastewater to OCSD's facilities.

The current Order No. 94-22 prohibits the direct discharge of tertiary treated wastewater to surface waters, except for the two reservoirs. However, during wet weather conditions, storm water runoff from the reservoir watershed occasionally causes overflows[1] from Sand Canyon Reservoir into San Diego Creek. The current Order allows the emergency discharge of water from the reservoir during rainfall events occurring over a 7-day period or less that result in rainfall equivalent to that from a 25-year, 24-hour storm event. The discharger has implemented best management practice to minimize overflows from Sand Canyon Reservoir by limiting recycled water storage at 200 acre-feet or less from October 1st to March 1st of each year. Historically, Sand Canyon Reservoir spilled in 1980, 1983, 1991, 1993, and 1997-98. The years 1980, 1983, 1997-98 were identified as El Nino years.

---

[1] *Rattlesnake Reservoir is not expected to overflow during the life of this Order.*

The MWRP is located adjacent to the San Joaquin Marsh and San Diego Creek. As such, the groundwater elevation is high. Consequently, dewatering of the shallow groundwater zone is necessary to protect in-ground facilities. The area is dewatered through a network of shallow zone wells with two separate discharge points, either into San Diego Creek or into the San Joaquin Marsh.

The MWRP is rated at 15 million gallons per day (mgd), however, since the completion of various plant upgrades, the recycled water production capacity has increased to 18 mgd. This capacity increase was reported in the Title 22 Engineering Report for the MWRP that the discharger submitted on April 1, 1997.

Recycled water is currently being used for all categories of reuse defined in Title 22, with the exception of groundwater recharge. Recycled water is used for crop and landscape irrigation, industrial process water, wetlands, cooling towers, car wash supply, toilet flushing in high rise commercial buildings and community facilities, decorative fountains, and sanitary landfill dust control and soil compaction activities.

In the fall of 1997, the OCSD, the City of Newport Beach, and the discharger dedicated an 8 mgd recycled water pipeline, the Green Acres Project (GAP) II pipeline, which connected the discharger's recycled water distribution system to Orange County Water District's GAP system to provide up to 4.2 mgd of recycled water, and up to 3.8 mgd recycled water disposal directly into the OCSD's ocean outfall.

Water supplied to the service areas is a combination of local groundwater from the Dyer Road Wellfield (DRWF) and Metropolitan Water District water from the Colorado River and northern California. The table below lists the range and average total dissolved solids (TDS) concentration of imported water and groundwater that is supplied to the discharger's service areas.

TDS CONCENTRATION OF WATER SUPPLY				
	Imported Water (mg/l)		Groundwater (mg/l)	
Period	Range	Average	Range	Average
1996	558-720	624	189-250	232
1997	530-674	586	196-264	232
1998	450-622	538	196-264	233
1999	481-586	512	196-250	233
2000	373-491	432	204-315	243
Water from these sources is supplied to the potable water distribution system at several points, making it difficult to determine the average TDS concentration of water supply within any specific area.				

II. REGULATORY BASIS FOR WASTE DISCHARGE REQUIREMENTS:

This Order includes requirements that implement the Water Quality Control Plan (Basin Plan), which was adopted by the Regional Board on March 11, 1994. The Basin Plan was approved by the Office of Administrative Law and became effective on January 24, 1995. This Plan specifies water quality objectives and beneficial uses for the waters of the Santa Ana Region.

The discharger's recycled water reservoirs and recycled water use areas overlie the Irvine Forebay I and II and Irvine Pressure Groundwater Subbasins. The beneficial uses of these groundwater subbasins include: municipal and domestic supply, agricultural supply, industrial service supply, and industrial process supply. The beneficial uses of the Sand Canyon and Rattlesnake Reservoirs include: agricultural supply, water contact recreation, non-contact water recreation, warm freshwater habitat, and wildlife habitat.

The beneficial uses of San Diego Creek include: water contact recreation; non-contact water recreation; warm freshwater habitat; and wildlife habitat.

The beneficial uses of San Joaquin Freshwater Marsh include: water contact recreation; non-contact water recreation; warm freshwater habitat; wildlife habitat; and preservation of rare and endangered species.

San Diego Creek and the San Joaquin Freshwater Marsh are tributary to Upper and Lower Newport Bay, the beneficial uses of which include: navigation; water contact recreation; non-contact water recreation; commercial and sportfishing; preservation of biological habitats of special significance; wildlife habitat; rare, threatened or endangered species; spawning, reproduction, and development; marine habitat; shellfish harvesting; and estuarine habitat.

On April 17, 1998, the Regional Board adopted Resolution No. 98-9, amending the Water Quality Control Plan for the Santa Ana River Basin (Basin Plan) to include a nutrient Total Maximum Daily Load (TMDL) for the Newport Bay/San Diego Creek Watershed. The nutrient TMDL was amended by Resolution No. 98-100 on October 9, 1998. Thereafter, it was approved by the State Water Resources Control Board, Office of Administrative Law and the US EPA.

In accordance with the nutrient TMDL, the proposed Order will update the existing waste discharge requirements for MWRP to include monitoring of waste discharges from groundwater dewatering operations at the plant for total nitrogen and total phosphorous.

Revisions to water quality objectives or to beneficial uses designated in the Basin Plan may occur in the course of periodic review and update of that Plan. These waste discharge requirements will be reopened to accommodate any of these changes.

Recycled water from the facility is used in a variety of ways: 1) Irrigation of parks and playgrounds; 2) Toilet flushing in high rise commercial buildings and community facilities; 3) Decorative fountains; 4) Landfill dust control and soil compaction activities; 5) Industrial process water; 6) Wetlands; 7) Cooling towers; and 8) Car wash supply. This Order includes water recycling requirements.

For discharges to Rattlesnake and Sand Canyon Reservoirs, the proposed Order specifies numeric and narrative limits for the control of toxic substances. These limits implement relevant water quality objectives in accordance with State and federal policy and regulation. Best professional judgement is also applied in determining effluent limits necessary to implement narrative toxicity objectives (in essence, that there shall be no toxics in toxic amounts) for these constituents without numeric water quality objectives. Documents used in determining these limits include:

1. 1995 Basin Plan
2. Policy for Implementation of Toxics Standards for Inland Surface Waters, Enclosed Bays, and Estuaries of California adopted on March 2, 2000 by the State Water Resources Control Board (hereinafter, "Policy")
3. Code of Federal Regulations (40 CFR Parts 122-503)
4. U.S. EPA, Quality Criteria for Water (1986)
5. National Toxics Rule (Federal Register, vol. 57, No. 256, Dec. 22, 1992, 60848-60922)

6. U.S. EPA, Office of Water Policy and Technical Guidance on Interpretation of Aquatic Life Metals Criteria (October 1, 1993)
7. Technical Support Document for Water Quality-based Toxics Control (EPA/505/2-90-001, March 1991)
8. Water Quality Standards; Establishment of Numeric Criteria for Priority Toxic Pollutants for the State of California, promulgated in May 18, 2000 by the U.S. EPA.
9. Water Quality Criterion for the Protection of Human Health: Methylmercury – EPA-823-R-01-001, January 2001.

Article 3, Section 60304, 60305 and 60307 of Title 22, Division 4, Chapter 3, "Water Recycling Criteria" shall be disinfected tertiary recycled water.

This Order implements federal regulations specified in 40 CFR 122, 123, 124, 125, 129 and 501, which pertain to all publicly-owned treatment works (POTW) with average design flows exceeding 1 mgd.

This Order contains requirements for the implementation of an effective pretreatment program pursuant to Section 307 of the Federal Clean Water Act Parts 35 and 403 of Title 40, Code of Federal Regulations (40 CFR 35 and 40 CFR 403) and Section 2233, Title 23, California Code of Regulations.

In accordance with Section 402 (p) of the Federal Clean Water Act, EPA published the final regulations for storm water runoff on November 16, 1990 (40 CFR Parts 122, 123 and 124). Industrial facilities, including POTW sites, are required to obtain NPDES Permits for storm water discharges. On April 17, 1997, the State Board adopted a General Industrial Storm Water Permit, Order No. 97-03-DWQ, NPDES No. CAS000001. Order No. 01-95 includes pertinent provisions of the General Industrial Storm Water Permit.

The State Water Resources Control Board (State Board) adopted a water reclamation policy on January 6, 1977. This policy requires that wastewater recycling requirements be issued to primary users of recycled water. Recycling requirements are included in this Order to address current and future use of recycled water.

The State Water Resources Control Board adopted the Policy for Implementation of Toxics Standards for Inland Surface Waters, Enclosed Bays, and Estuaries of California (Policy) on March 2, 2000. This Policy establishes implementation provisions for priority pollutant criteria promulgated by the U.S. Environmental Protection Agency (U.S. EPA) through the National Toxics Rule (NTR) (promulgated on December 22, 1992 and amended on May 4, 1995) and through the California Toxics Rule (CTR) (promulgated on May 18, 2000).

III. PROPOSED EFFLUENT LIMITATIONS:

The limitations in this Order are intended to control pollutants in the waste discharge, maintain water quality, and protect the beneficial uses of the affected receiving waters. Revisions to water quality objectives, to beneficial uses, or to the implementation plan specified in the Basin Plan may occur in the course of periodic review and update of the Plan. These waste discharge requirements will be re-evaluated and may be revised to accommodate any of these changes.

A. Biochemical Oxygen Demand (BOD) and Suspended Solids (SS)

The proposed Biological Oxygen Demand (BOD) and suspended solids (SS) limits are based on values that are achievable with biological treatment. These limits are intended to ensure that only adequately oxidized wastewater is discharged.

B. Total Dissolved Solids (TDS)/Inorganic Minerals

The proposed TDS limit is based on the objective for the Irvine Forebay II subbasin, which lacks assimilative capacity for TDS. This limit is equal to or more restrictive than the TDS objectives for any other waters affected by the discharge. This Order also specifies another TDS limit which is based on the quality of the water supplied to the service area plus a reasonable use increment[2]. The more restrictive of the two TDS limits applies to the discharges.

The Basin Plan recognizes that strict compliance with the TDS limits may be difficult to achieve. The Basin Plan describes the regulatory approach the Regional Board uses to address such situations. The Board incorporates offset provisions in waste discharge requirements whereby dischargers can participate in approved programs to offset TDS discharges in excess of specified TDS limits, provided that the discharger makes all reasonable efforts to improve the TDS quality of the water supply (and, thereby, the wastewater).

Total dissolved solids is essentially the summation of the concentrations of sodium, sulfate, chloride and total hardness (carbonates) in water. The water quality objectives for these individual mineral constituents are commensurate with the TDS objective for a groundwater subbasin. An exceedance of the TDS objective would likely result in an exceedance of one or more of the objectives for these components of TDS. Therefore, although the offset provision mentioned above specifically addresses only TDS, it is reasonable that this provision should also apply to those individual mineral components of TDS.

---

[2] *See Mineral Increments on Page 5-15 of 1995 Basin Plan.*

C. Total Inorganic Nitrogen (Nitrate, Nitrite, Ammonia)

High concentrations of nitrates in domestic water can be toxic to human life. To protect human health, the concentrations of nitrates in lakes, streams, and groundwater which are sources of drinking water must not exceed 45 mg/l (as NO_3) or 10 mg/l (as N) as a result of controllable water quality factors.

Un-ionized ammonia (NH_3) exists in equilibrium with ammonia (NH_4) and hydroxide (OH^-) ions. The concentrations of ammonium and hydroxide ions change with temperature, pH and salinity of the water. This Order specifies an ammonia effluent limitation of 1.50 mg/l for recycled water discharged into reservoirs. This limit is based on best professional judgement, using intensive, ammonia/un-ionized ammonia studies as guidance, regarding the un-ionized objectives necessary to protect the beneficial uses of the receiving waters affected by the discharge and the ammonia limitations necessary to assure compliance with those objectives.

D. Trace Constituent Limitations

The U.S. EPA has identified 126 priority pollutants, including metals and organic chemicals, and has promulgated water quality objectives for many of these substances in the California Toxics Rule and National Toxics Rule. The State Board's Policy for Implementation of Toxics Standards for Inland Surface Waters, Enclosed Bays and Estuaries of California (Policy) specifies the procedures that are to be used in implementing these objectives in waste discharge requirements. Numeric effluent limitations must be specified for those priority pollutants that are determined to have the reasonable potential to cause or contribute to a violation of the applicable objectives. To determine reasonable potential, the maximum effluent concentrations were compared to the criteria values specified in the California Toxics Rule. If the detected concentrations are less than the objectives, it is concluded that the effluent poses no reasonable potential to exceed water quality objectives for that constituent, and numeric effluent limitations for that constituents are not required. However, periodic quarterly monitoring for such constituents is required. In situations where the criteria value and all available effluent and receiving water data were below detection limits, no reasonable potential determination could be made. Therefore, in accordance with the State Board's Policy, effluent limits for those constituents also were not included in this Order. However, the discharger is also required to monitor these pollutants on a quarterly basis at detection levels that are specified in the Order.

No numeric effluent limitations for priority pollutants are specified in this Order based on the determination that these pollutants have no reasonable potential to cause or contribute to violations of the relevant water quality objectives. In one case, Bis(2-Ethyhexyl)phthalate, the discharger reported values[3] that exceeded the objective. These data are suspect, however. Other dischargers within the Santa Ana Region have reported levels of Bis(2-Ethyhexyl)phthalate in excess of the objective and have conducted studies to determine its source. The conclusions drawn to date have been that the Bis(2-Ethyhexyl)phthalate reported in effluent analyses reflect contamination during the sample collection or analysis process. Bis(2-Ethyhexyl)phthalateis widely used in plastic bottles and tubings used to collect and analyze samples. No receiving water data for this constituent are available. Therefore, in accordance with Section 2.2.2.A. of the Policy, no limit for bis (2-ethylhexyl) phthalate is included in the Order. Rather, the Order includes an interim requirement for the discharger to conduct a controlled and intensive one-year monitoring program of the effluent for bis (2-ethylhexyl) phthalate using methods and equipment that would prevent sample contamination, produce reliable test results and use a test detection level acceptable to the Regional Board. Should monitoring data show a reasonable potential for the constituent to exceed objectives, this Order will be reopened to include a limit for bis (2-ethylhexyl) phthalate.

Some constituents were previously limited in Order No. 94-22 but have not been detected. Pursuant to the State Board Policy, these constituents have no demonstrated reasonable potential to cause or contribute to a violation of water quality standards. Therefore, the effluent limits for these constituents were eliminated in this Order.

E. Toxicity Limitations

This Order requires the discharger to conduct chronic[4] toxicity testing of the effluent on a monthly basis. The Order also requires the discharger to conduct an Initial Investigation Toxicity Reduction Evaluation (IITRE[5]) program when either the two month median of toxicity test results exceeds 1 TUc or any single test exceeds 1.7 TUc for survival endpoint. Based on the results of this investigation program and at the discretion of the Executive Officer, a more rigorous Toxicity Reduction Evaluation/Toxicity Identification Evaluation (TRE/TIE) may be required. A re-opener provision is included in the Order to incorporate a chronic toxicity effluent limitation if warranted by the toxicity test results.

---

3 *For monitoring period between 1997 to 2000, out of 12 data points 4 are above the criteria value. Two values (13 and 18 ug/l) were detected in 1998 and one each for 1997 (7 ug/l) and 2000 (11 ug/l).*

4 *The chronic test method for the water flea "Ceriodaphnia dubia" also measures acute toxicity.*

5 *An IITRE is the initial stage of investigation conducted prior to implementing a complete toxicity reduction evaluation (TRE) study. A TRE is a stepwise process for identifying the agent(s) and/or source(s) of toxicity in a given effluent.*

F. Compliance

Many of the objectives specified in the California Toxics Rule, and the effluent limits that implement them, are at extremely low concentrations. In several cases, these concentrations are below current laboratory detection values. As such, it is necessary to require laboratory analyses to be performed to the lowest possible concentrations. The Policy for Implementation of Toxics Standards for Inland Surface Waters, Enclosed Bays, and Estuaries of California (Policy) includes a list of priority pollutants with their respective Minimum Levels (ML)[6] on which "reported Minimum Levels" (i.e., quantitation values for the sample) shall be based. The Policy recognizes that the "reported ML" may be orders of magnitude different than the listed MLs depending on the amount of dilution/concentration required for sample preparation, and the amount of dilution necessary to address matrix interference. Unfortunately, the policy lacks guidance for the development of appropriate "reported MLs".

For the last several permit cycles, the Regional Board has required discharges to meet practical quantitation levels (PQLs[7]). The PQLs for wastewater were developed based on the following:

1. A survey of laboratories in the Southern California area and a review of method detection levels (MDLs) in accordance with 40 CFR 136 for a wastewater matrix reported by local laboratories;

2. The consensus PQLs determined during the meeting of major Southern California laboratories with the Regional Board staff on January 28, 1992. The consensus PQLs are believed to represent the lowest quantitation levels that can be achieved by most laboratories in Southern California based on proven laboratory performance and the reasonable application of best available analytical technology for most toxic substances;

3. The report "A Study To Determine The Practical Quantitation Levels (PQL) For Selected Water Chemistry Parameters Analyzed by Commercial Laboratories Operating In The Santa Ana River Watershed" (Risk Sciences, 1993). This report recommended PQLs for cadmium, copper, lead, selenium, and silver that better represented the actual PQLs attained by analytical laboratories performing analyses for these substances in a recycled water matrix.

---

6 *Minimum Level is the concentration at which the entire analytical system must give a recognizable signal and acceptable calibration point. The ML is the concentration in a sample that is equivalent to the concentration of the lowest calibration standard analyzed by a specific analytical procedure, assuming that all the method specified sample weights, volumes, and processing steps have been followed.*

7 *PQL is the lowest concentration of a substance that can be determined within ± 20 percent of the true concentration by 75 percent of the analytical laboratories tested in a performance evaluation study. Alternatively, if performance data are not available, the PQL is the method detection limit (MDL) x 5 for carcinogens and MDL x 10 for noncarcinogens.*

Order No. 01-95 sets the PQLs listed in Attachment "A" of the monitoring and reporting program as the "reported MLs" for those constituents listed, until June 1, 2002. For all other constituents not listed in the PQL list, the lowest detection level achieved by the discharger shall be used with prior approval by the Executive Officer. Order No. 01-95 requires that by June 1, 2002, the discharger shall meet the quantitation levels specified in Attachment "B" of the Monitoring and Reporting Program No. 01-95 for those priority pollutants with effluent limitations in the Order.

In cases where the discharger believes that the sample matrix justifies a different "reported ML", the discharger is required to demonstrate to the satisfaction of the Regional Board's Executive Officer the appropriateness of the alternative "reported ML" for that sample matrix prior to June 1, 2002.

All analytical data are required to be submitted with the corresponding MDLs and MLs. Sample results shall be reported as "DNQ" (Detected, but Not Quantified) if the results are less than the reported ML, but greater than the MDL. Sample results shall be reported as "ND" (Not Detected) if the results are less than the MDL.

Dischargers shall be deemed out of compliance with an effluent concentration limit if the concentration of the effluent sample is greater than the effluent limit and greater than or equal to the "reported ML". Dischargers shall not be deemed out of compliance for any sample result reported as DNQ or ND. However, the discharger is required to conduct a Pollutant Minimization Program, as described in the Policy, if there is an indication that a constituent is present in the effluent above an effluent limitation in this Order and either:

a. A sample result is reported as DNQ and the effluent limitation is less than the "reported ML", or

b. A sample result is reported as ND and the effluent limitation is less than the MDL.

IV. ANTIDEGRADATION ANALYSIS:

The Regional Board has considered antidegradation pursuant to 40 CFR 131.12 and State Board Resolution No. 68-16. The water quality of the receiving waters is not expected to degrade as a result of this discharge. Neither the constituent concentrations of the discharge nor the mass loading of pollutants associated with the discharge will adversely affect the beneficial uses of the receiving waters. These waste discharge requirements specify effluent limitations that are based on the increased design capacity of the facility (from 15 to 18 mgd). The requirements thus allow an increase in the mass loading of pollutants over that currently permitted. However, the increase in mass loading is not expected to degrade the water quality of the receiving waters. During dry weather, all the treated effluent from the Michelson Water Reclamation Plant is and will continue to be recycled. During periods of low demand for recycled water, wastewater that is not needed for recycling is now diverted to OCSD facilities for treatment and ocean disposal. That diversion is not expected to increase in the forseeable future given capacity and hydraulic constraints.

Implementation of the Groundwater Replenishment Project, a joint effort of the OCSD (which includes the discharger) and the Orange County Water District, will create additional demand for recycled water. The limitations in this Order are established at levels that will assure no degradation of groundwaters affected by wastewater recycling. Therefore, this discharge is consistent with federal and state antidegradation policies.

V. WRITTEN COMMENTS:

Interested persons are invited to submit written comments on the proposed waste discharge requirements. Submittal of comments by November 16, 2001, would be appreciated. Please mail them to:

Jane Qiu
California Regional Water Quality Control Board
Santa Ana Region
3737 Main Street, Suite 500
Riverside, CA 92501-3348

VI. INFORMATION AND COPYING:

Persons wishing further information may write to the above address or call Jun Martirez of the Regional Board at (909) 782-3258. Copies of the application, proposed waste discharge requirements, Fact Sheet, and other documents (other than those which the Executive Officer maintains as confidential) are available at the Regional Board office for inspection and copying between the hours of 9:00 a.m. and 3:00 p.m., Monday through Friday (excluding holidays).

VII. REGISTER OF INTERESTED PERSONS:

Any person interested in a particular application or group of applications may leave his name, address, and phone number as part of the file for an application.

VIII. PUBLIC HEARING:

The Regional Board will hold a public hearing regarding the proposed waste discharge requirements as follows:

DATE: **December 19, 2001**
TIME: **9:00 a.m.**
PLACE: **City Council Chambers of Santa Ana**
22 Civic Center Plaza
Santa Ana, CA 92702

Location Map

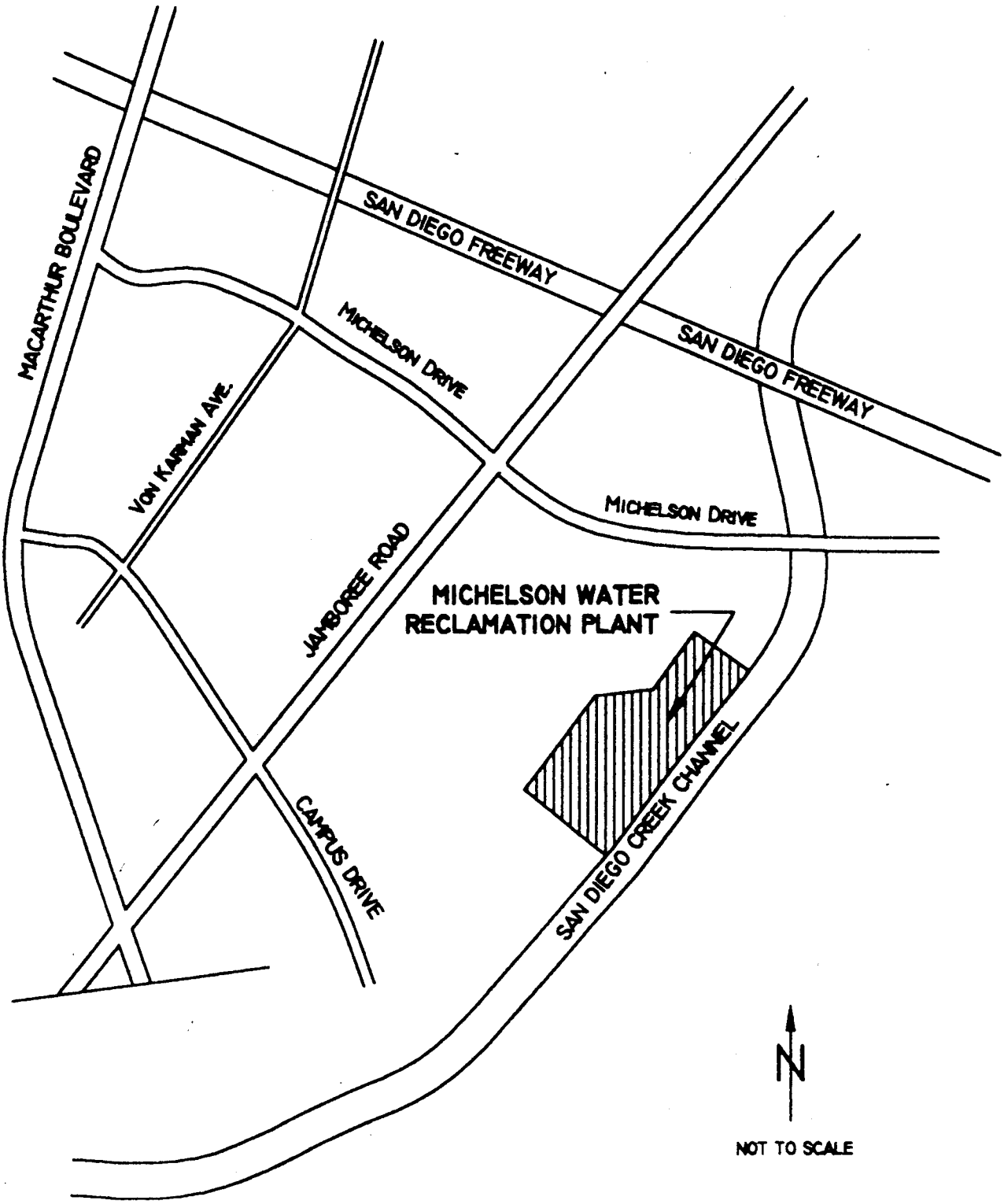

Reuse Distribution System Schematic

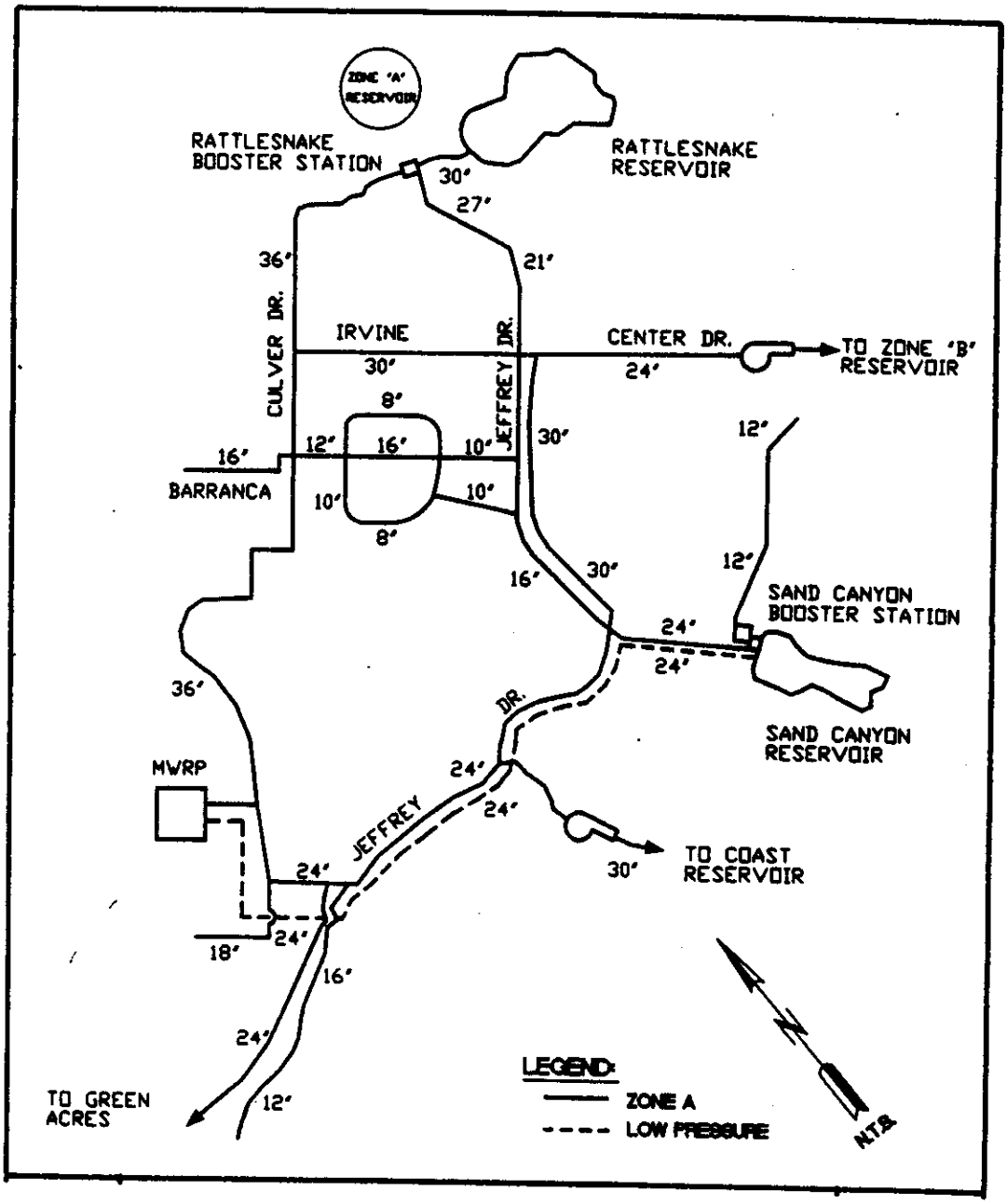

Schematic of Treatment Plant Wastewater Flow

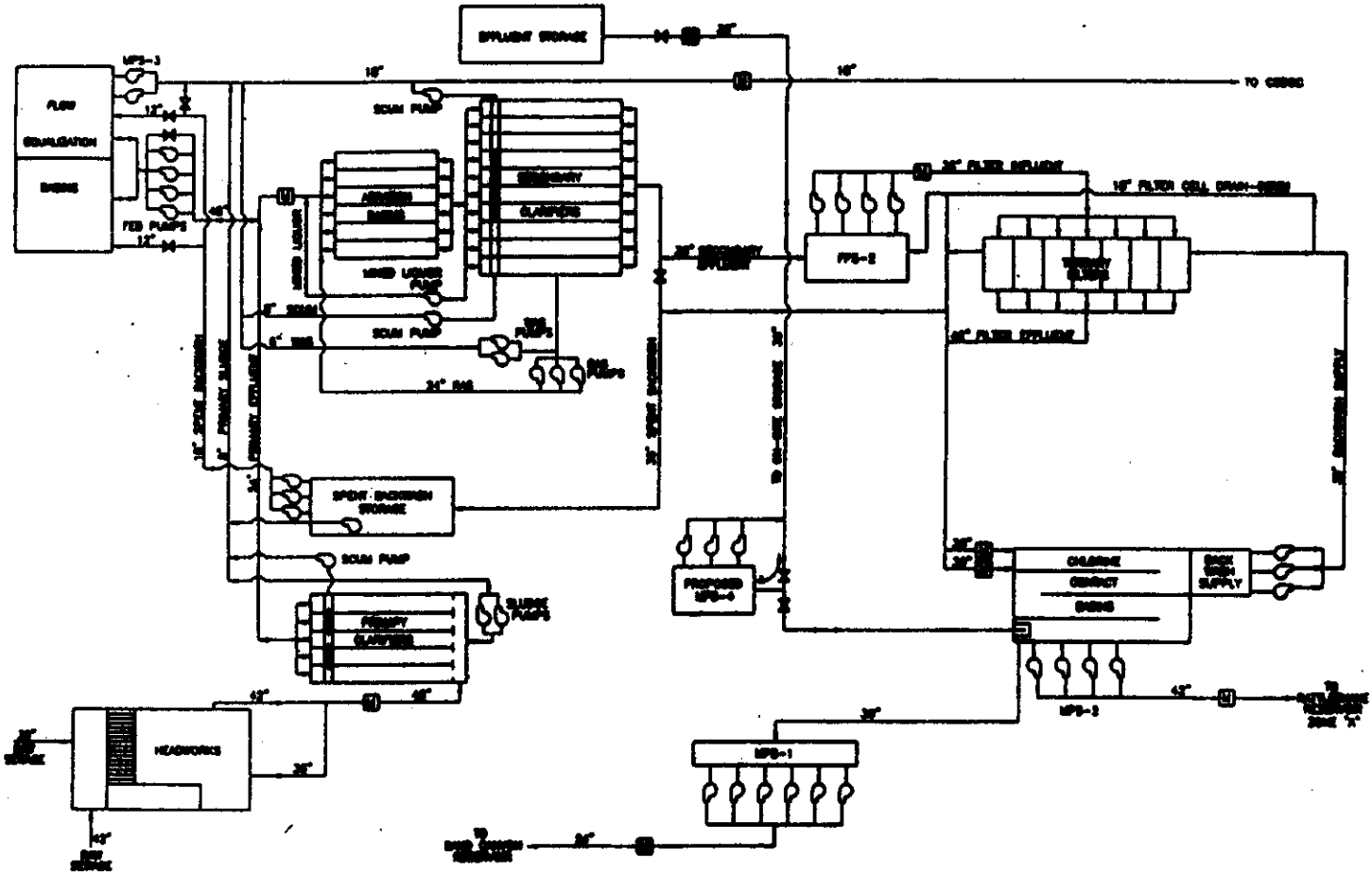

Wastewater Collection System Schematic

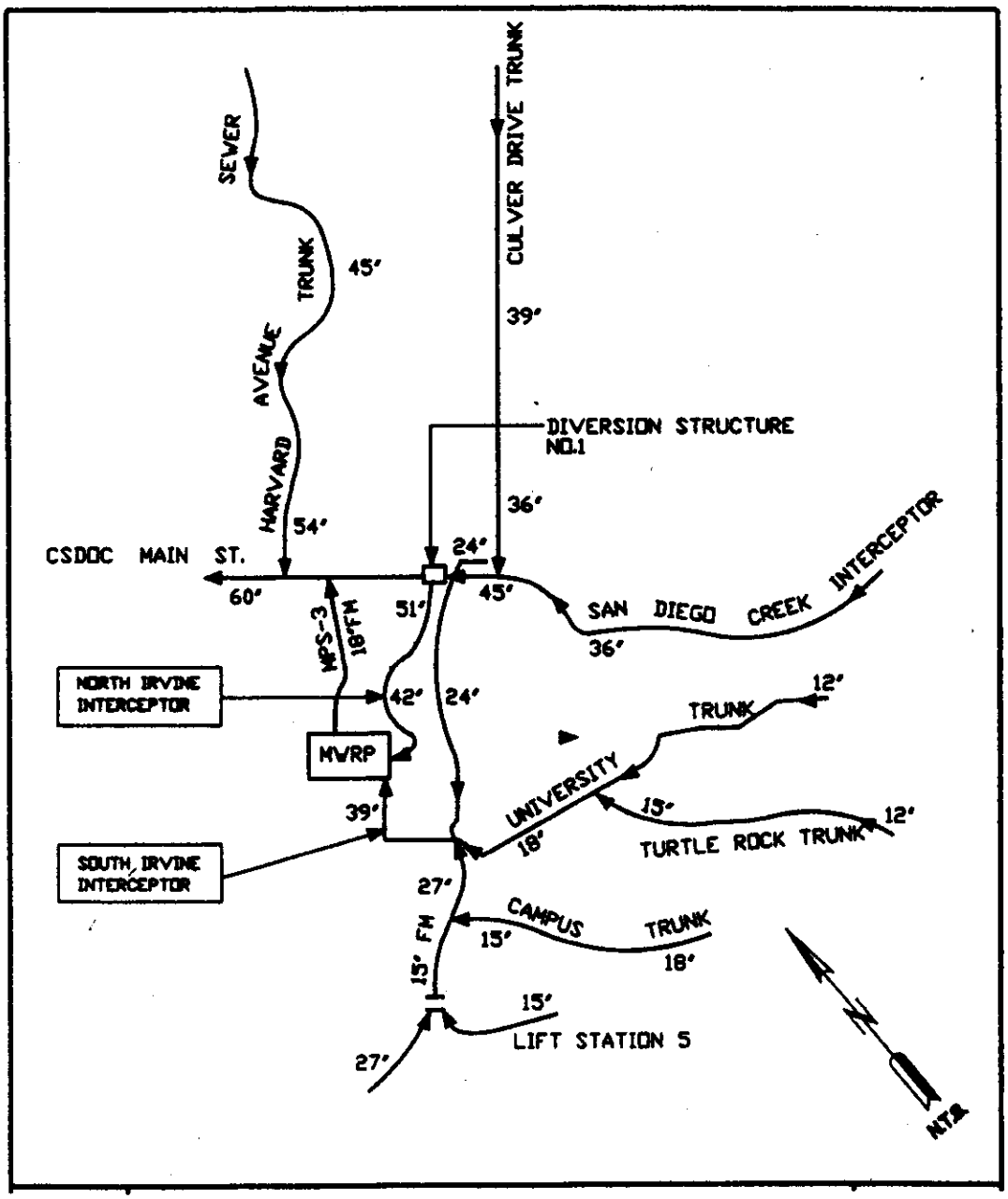

California Regional Water Quality Control Board
Santa Ana Region

ORDER NO. 01-95
NPDES NO. CA8000326

Waste Discharge and Producer/User Water Recycling Requirements

for the

Irvine Ranch Water District
Michelson Water Reclamation Plant
Orange County

California Regional Water Quality Control Board
Santa Ana Region

ORDER N0. 01-95
NPDES NO. CA8000326

TABLE OF CONTENTS

PAGE

FINDINGS: 1-9

A. Discharge Specifications 10-14

1. Effluent Limits for Discharge Serial Nos. 003 & 004 10-13

a. Conventional Pollutants 10

b. Non-Conventional Pollutants Effluent Limitations 10

c. (1) TDS/Mineral Effluent Limitations 11-12

(2) Water Supply Based TDS Limitation 12

2. Recycled Wastewater Discharge Specifications 12-13

3.-10. Discharge Specifications
and Effluent Limits for Discharge Point 001 13-15

B. Toxicity Requirements 15-16

C. Receiving Water Limitations: 16-17

D. Stormwater Requirements 17

E. Pretreatment Requirements: 18-19

F. Water Recycling Requirements: 19-21

G. Compliance Determination: 21-24

H. Required Notices and Reports: 24-28

I. Penalties: 29

J. Provisions: 29-34

K. Permit Re-opening, Revision, Revocation, and Re-issuance: 35

California Regional Water Quality Control Board
Santa Ana Region

ORDER NO. 01-95
NPDES NO. CA8000326

Waste Discharge and Producer/User Water Recycling Requirements
for the
Irvine Ranch Water District
Michelson Water Reclamation Plant
Orange County

The California Regional Water Quality Control Board, Santa Ana Region (hereinafter, Regional Board), finds that:

1. The Irvine Ranch Water District (hereinafter discharger) owns and operates the Michelson Water Reclamation Plant (MWRP). The discharge and distribution of recycled water from the MWRP is currently regulated by Order No. 94-22, National Pollutant Discharge Elimination System (NPDES) Permit No. CA8000326, which expired on September 1, 1999. Order No. 94-22 has been administratively extended until it is replaced by revised waste discharge requirements.

2. The Michelson Water Reclamation Plant is located at longitude 117°50'30", latitude 33°39'38" within the SW quarter of Section 8, T6S, R9W, SBB&M.

3. The MWRP treats domestic, commercial, and industrial wastes from areas within central Orange County that are designated as Revenue Area 14 of the County Sanitation District. Revenue Area 14 includes the City of Irvine, portions of the Cities of Tustin and Newport Beach, and parts of unincorporated Orange County.

4. The wastewater treatment consists of the following:

    a. Preliminary treatment consisting of the headworks, with mechanically cleaned bar screens and grinding equipment, primary clarifiers, and flow equalization basins.

    b. Activated sludge process consisting of aeration basins and secondary clarifiers.

    c. Tertiary treatment consisting of coagulation with alum, dual media filtration and disinfection by chlorination.

5. Tertiary treated wastewater from the plant is either directly recycled to customers through 800 miles of pipes or discharged to dedicated recycled water storage reservoirs prior to reuse within the discharger's service areas. Currently, during dry weather, all wastewater treated by the discharger is recycled and used in a wide variety of ways, including crop and landscape irrigation, toilet flushing in high rise commercial buildings and community association operated facilities, decorative fountains, and sanitary landfill dust control and soil compaction activities. When necessary, the discharger supplements the recycled water with water from local groundwater wells and Irvine Lake.

   Approximately 1 mgd is utilized in Newport Beach and Newport Coast throughout the year. Approximately 6 mgd is provided to OCSD and OCWD during the winter months, when the supply of recycled water exceeds the local demand.

6. The MWRP was originally designed to treat up to 15.0 mgd of wastewater, however due to recent plant upgrades, the plant has been re-rated to a capacity of 18 mgd. The average annual influent flow to the plant is approximately 13.2 mgd.

7. The discharger also discharges wastewater from groundwater dewatering[1] operations at the MWRP site. Approximately 0.36 mgd of this wastewater is discharged into San Diego Creek or the San Joaquin Marsh.

8. Outside of the discharger's recycled water storage and delivery system, wastewater is discharged at the following discharge points:

Discharge Serial	Location of Discharge		Description of discharge
	Latitude	Longitude	
001	33°39'48"	117°50'15"	Pumped groundwater discharged into San Diego Creek
002	33°39'53"	117°50'24"	Pumped groundwater discharged into San Joaquin Marsh
003	33°38'44"	117°47'49"	Recycled water discharge into Sand Canyon Reservoir
004	33°43'40"	117°44'34"	Recycled water discharge into Rattlesnake Reservoir

[1] *Groundwater dewatering is necessary to protect in-ground treatment structures and equipment from the fluctuating groundwater table.*

9. Sand Canyon Reservoir occasionally overflows into San Diego Creek, a tributary of Newport Bay[2]. The reservoir will be operated in a manner designed to reduce the potential for overflow of recycled water. This Order requires the discharger to stop discharging recycled water into the reservoir from October 1st to March 1st whenever the stored volume is at 200 acre-feet. This will allow a buffer volume of approximately 568 acre-feet (approximately 185 million gallons) for storm runoff. When overflow occurs, the stored recycled water will be diluted 2.84 times with storm runoff from the reservoir watershed.

10. In January 1986, the discharger joined the Orange County Sanitation District (OCSD) to dispose of untreated wastewater generated within the discharger's service area when it is not needed for reclamation. In February of 1987, the discharger and OCSD entered into a memorandum of understanding (MOU) governing the administration of the discharger's industrial waste program. The MOU brought industries considered as Class I industries by the District's wastewater discharge regulations/ordinance under a joint IRWD/OCSD Class I permit, which is administered by OCSD's ordinance. The MOU also preserves the independent authority and responsibilities of both agencies, thereby allowing the discharger to operate its pretreatment program for the MWRP in compliance with Federal and state pretreatment regulations. This Order requires the discharger to update, as necessary, its MOU with OCSD.

11. The discharger acquired a 32 million gallons per day (mgd) capacity right for the delivery, treatment, and disposal of wastewater to OCSD treatment facilities. During periods of low demand for recycled water, wastewater that is not needed for recycling is diverted to OCSD facilities for treatment and disposal.

12. A revised Water Quality Control Plan (Basin Plan) became effective on January 24, 1995. The Basin Plan contains beneficial uses and water quality objectives for waters in the Santa Ana Region. The Basin Plan was subsequently amended by Resolutions No. 98-9 and 98-69. (See also Finding 28)

13. The beneficial uses of San Diego Creek, Reach 1 include:

    a. Water contact recreation,

    b. Non-contact water recreation,

    c. Warm freshwater habitat, and

    d. Wildlife habitat.

14. The beneficial uses of Sand Canyon and Rattlesnake Reservoirs include:

    a. Agricultural supply,

    b. Water contact recreation,

---

[2] *Records show that the reservoir spilled in 1980, 1983, 1991, 1993, and 1997-98.*

c. Non-contact water recreation,

d. Warm freshwater habitat, and

e. Wildlife habitat.

15. The beneficial uses of San Joaquin Freshwater Marsh include:

a. Water contact recreation,

b. Non-contact water recreation,

c. Warm freshwater habitat,

d. Preservation of biological habitats of special significance,

e. Wildlife habitat, and

f. Rare, threatened or endangered species.

16. San Diego Creek and the San Joaquin Freshwater Marsh are tributary to Upper and Lower Newport Bay, the beneficial uses of which include:

a. Navigation,

b. Water contact recreation,

c. Non-contact water recreation,

d. Commercial and sport fishing,

e. Preservation of biological habitats of special significance,

f. Wildlife habitat,

g. Rare, threatened or endangered species,

h. Spawning, reproduction, and development,

i. Marine habitat,

j. Shellfish harvesting, and

k. Estuarine habitat.

17. The beneficial uses of the Irvine Forebay I & II and Irvine Pressure Groundwater Subbasins include:

a. Municipal and domestic supply,

b. Agricultural supply,

c. Industrial service supply, and

d. Industrial process supply.

18. The requirements contained in this Order are necessary to implement the Basin Plan.

19. It is appropriate and necessary to control and limit the concentrations of individual mineral constituents that may be discharged from the wastewater treatment plant.

20. The effluent monitoring data from January 2000 through July 2001 show a 12-month average TDS concentration maximum of 697 mg/l and a minimum of 654 mg/l. The median of the 12-month-average TDS concentration is 666 mg/l.

21. The discharger's recycled water reservoirs and recycled water use areas overlie the Irvine Forebay I & II and Irvine Pressure Groundwater Subbasins. The total dissolved solids (TDS) objectives of these groundwater subbasins and reservoirs are:

Groundwater Subbasin/ Reservoirs	TDS Objective (mg/l)
Irvine Forebay I Subbasin	1,000
Irvine Forebay II & Irvine Pressure Subbasins, Sand Canyon and Rattlesnake Reservoirs	720

22. The Irvine Forebay I & II ground water subbasins lack assimilative capacity for TDS. Therefore, discharges to these subbasins cannot exceed the respective subbasin objectives. However, recognizing the practical reality that recycled water may be discharged for recycling purposes in areas overlying multiple subbasins, this order specifies a TDS limit based on the most restrictive subbasin objective (720 mg/l).

23. The Basin Plan recognizes that strict compliance with these Groundwater Subbasin TDS objectives may be difficult to achieve. The Basin Plan describes the regulatory approach the Regional Board uses to address such situations. The Board incorporates offset provisions in waste discharge requirements whereby dischargers can participate in approved programs to offset TDS discharges in excess of specified TDS limits, provided that the discharger makes all reasonable efforts to improve the TDS quality of the water supply (and, thereby, the wastewater).

24. Total dissolved solids is essentially the summation of the concentrations of sodium, sulfate, chloride and total hardness (carbonates) in water. The water quality objectives for these individual mineral constituents are commensurate with the TDS objectives for these groundwater subbasins. An exceedance of the TDS objective would likely result in an exceedance of one or more of the objectives for these components of TDS. Therefore, although the offset provision mentioned above specifically addresses only TDS, it is reasonable that this provision should also apply to those individual mineral components of TDS.

25. This Order specifies that the TDS and mineral limits apply unless the discharger implements an approved program to offset TDS and mineral constituents discharges in excess of these groundwater subbasin objectives.

26. Recycled water from the MWRP is distributed to the Sand Canyon and Rattlesnake Reservoirs for storage. Super-chlorination of the recycled water is necessary to prevent fouling of the recycled water distribution lines. As such, discharges of recycled water into the reservoirs contain concentrations of residual chlorine that may be toxic to aquatic organisms. However, the residual chlorine present in the discharges dissipates within the reservoirs such that the reservoirs support aquatic life, including fish. The discharge of chlorinated recycled water to the reservoirs does not compromise the beneficial uses of the reservoirs, which include warm water aquatic habitat. The discharge of chlorinated recycled water to the reservoirs is necessary to accommodate wastewater reclamation and water conservation. It is in the public interest to accommodate these activities.

    This Order specifies an effluent limitation for total chlorine residual to protect aquatic life beneficial uses. Compliance with this limitation is to be achieved outside a zone of initial dilution, wherein dissipation of the chlorine occurs. This Order requires the discharger to conduct a focused investigation, approved by the Regional Board's Executive Officer, to provide data concerning the boundary of the zone of initial dilution. Upon approval by the Executive Officer, the boundary of the zone of initial dilution shall serve as the point of compliance for the chlorine residual limit in this Order.

27. This Order specifies an effluent limitation for ammonia nitrogen to protect aquatic life beneficial uses. Compliance with this limitation is to be achieved outside a zone of initial dilution, wherein dissipation of the ammonia occurs. This Order requires the discharger to conduct a focused investigation, approved by the Regional Board's Executive Officer, to provide data concerning the boundary of the zone of initial dilution. Upon approval by the Executive Officer, the boundary of the zone of initial dilution shall serve as the point of compliance for the ammonia nitrogen limit in this Order.

28. On April 17, 1998, the Regional Board adopted Resolution No. 98-9 amending the Basin Plan for the Santa Ana River Basin to incorporate a Nutrient Total Maximum Daily Load (TMDL) for the Newport Bay/ San Diego Creek Watershed. The TMDL was amended by Resolution No. 98-100 on October 9, 1998 and thereafter approved by the State Water Resources Control Board, Office of Administrative Law and the US EPA.

29. This Order implements relevant requirements of the Nutrient TMDL. This TMDL requires a 50 percent reduction in nitrogen discharges to Newport Bay, including discharges from groundwater dewatering operations, as soon as possible but no later than 2012. Earlier compliance with this requirement may be required where it is feasible and reasonable.

30. Current monitoring data for Total Nitrogen (TN) discharges from dewatering operations at the facility show an average concentration of 2.19 mg/l. To implement the nutrient TMDL, this Order includes a total nitrogen effluent limit of 1 mg/l for groundwater dewatering discharges to San Diego Creek, which is tributary to Newport Bay. The discharger proposes to comply with this requirement by implementing a nitrogen offset program. Nitrogen

discharges in excess of 1 mg/l will be offset by nitrogen reductions as the result of the discharger's diversion and treatment of San Diego Creek flows in the IRWD constructed wetlands in the San Joaquin Marsh.

31. The discharger is considered a publicly owned treatment works (POTW) as defined in 40 CFR[3] Part 122.2.

32. As required by the Clean Water Act (CWA) and regulations adopted thereunder, the chemical specific limitations contained in this Order are designed to prevent a violation of any applicable water quality standard for receiving waters adopted by the Regional Board, the State Board or US EPA. If more stringent applicable water quality standards are approved pursuant to Section 303 of the CWA, or amendments thereto, the Regional Board will revise and modify this Order in accordance with such more stringent standards.

33. To control pollutants that pass through or interfere with treatment processes in Publicly Owned Treatment Works or that may contaminate sewage sludge, and to prevent the discharge of pollutants into the treatment plant that may endanger treatment plant operational safety, this Order contains requirements for the implementation of an effective pretreatment program pursuant to Section 307 of the CWA; Parts 35 and 403 of Title 40, Code of Federal Regulations (40 CFR 35 and 40 CFR 403); and/or Section 2233, Title 23, California Code of Regulations. Currently, by agreement, OCSD and IRWD have joint authority for implementation of the pretreatment program within IRWD's service area, with OCSD having primary responsibility for monitoring, inspection, and enforcement. Consequently, the OCSD submits the required annual pretreatment report that covers all of its service area, including OCSD's Revenue Area 14, which encompasses the area sewered to the MWRP. The discharger will continue to inspect and monitor the pretreatment program concurrently with OCSD and will submit any supplemental information to OCSD for inclusion in the annual and semiannual pretreatment reports.

34. This Order incorporates the requirements specified in the EPA and Regional Board approved pretreatment program for the discharger's service areas as enforceable conditions of this Order.

35. This Order does not include requirements for biosolids management since all biosolids produced at the facility are pumped to the OCSD facilities for treatment and disposal.

36. Article 3, Sections 60304(a) and 60307(a) of Title 22, Chapter 3, "Water Recycling Criteria" of the California Code of Regulations specifies that recycled water used as described in Finding No. 5, above, shall be disinfected tertiary recycled water. Section 60307(b) specifies that at least disinfected secondary-23 recycled water be provided if the recycled water is to be used for soil compaction, or dust control on roads and streets.

---

[3] *Code of Federal Regulations*

37. On January 6, 1977, the State Board adopted a water recycling policy "Policy and Action Plan for Water Reclamation in California" regarding the issuance of wastewater recycling requirements to primary users of recycled water. This Order incorporates requirements for the production and use of recycled water in conformance with the Policy and with the "Water Recycling Criteria" (Title 22, Division 4, California Code of Regulations (CCR)) adopted by the California Department of Health Services. The Regional Board has consulted with the Department of Health Services regarding these requirements and has incorporated the Department's recommendations.

38. On April 17, 1997, the State Board adopted the General Industrial Storm Water Permit, Order No. 97-03-DWQ, NPDES No. CAS000001. This General Permit implements the Final Regulations (40 CFR 122, 123, and 124) for storm water runoff published on November 16, 1990 by EPA in compliance with Section 402(p) of the Clean Water Act (CWA). Storm water from the facility is channeled into the onsite emergency storage pond, from which it is pumped to the treatment plant for treatment. However, the potential for stormwater to be discharged is present during heavy storms. Therefore, this Order includes pertinent provisions of the General Industrial Storm Water Permit.

39. Effluent limitations, national standards of performance, and toxic pretreatment effluent standards established pursuant to Section 208(b), 301, 302, 303(d), 304, 306, and 307 of the Clean Water Act, and amendments thereto, are applicable to the discharge.

40. On May 18, 2000, the U.S. Environmental Protection Agency issued a final rule establishing Numeric Criteria for Priority Toxic Pollutants for the State of California. This action was necessary to fulfill the requirements of Section 303(c)(2)(B) of the Clean Water Act. This rule is commonly referred to as the California Toxics Rule.

41. Federal Regulations require permits to include limitations for all pollutants that are or may be discharged at a level that will cause, have the reasonable potential to cause, or contribute to an excursion of a water quality standard.

42. On March 2, 2000, the State Water Resources Control Board adopted the Policy for Implementation of Toxics Standards for Inland Surface Waters, Enclosed Bays, and Estuaries of California. This Policy includes implementation provisions for the California Toxics Rule. The Policy specifies a methodology to determine if pollutants in the discharge are at a level that will cause, have the reasonable potential to cause, or contribute to an excursion of a water quality standard. The Policy also delineates procedures to be used to calculate appropriate limits.

43. This Order implements relevant provisions of the California Toxic Rule and the State Board Policy. Based on the methodology outlined in the State Board Policy, the review of relevant data indicates that there are no priority pollutants[4] that pose a reasonable potential to cause or contribute to an excursion of a water quality standard.

---

[4] *As listed in 40 CFR 131.38. See also Federal Register/ Vol. 65, No. 97 / Thursday, May 18, 2000 / Rules and Regulations*

44. The Regional Board has considered antidegradation pursuant to 40 CFR 131.12 and State Board Resolution No. 68-16. The water quality of the receiving waters is not expected to degrade as a result of this discharge. Neither the constituent concentrations of the discharge nor the mass loading of pollutants associated with the discharge will adversely affect the beneficial uses of the receiving waters. These waste discharge requirements specify effluent limitations that are based on the increased design capacity of the facility (from 15 to 18 mgd). The requirements thus allow an increase in the mass loading of pollutants over that currently permitted. However, the increase in mass loading is not expected to degrade the water quality of the receiving waters. During dry weather, all the treated effluent from the Michelson Water Reclamation Plant is and will continue to be recycled. During periods of low demand for recycled water, wastewater that is not needed for recycling is now diverted to OCSD facilities for treatment and ocean disposal. That diversion is not expected to increase in the forseeable future given capacity and hydraulic constraints. Implementation of the Groundwater Replenishment Project, a joint effort of the OCSD (which includes the discharger) and the Orange County Water District, will create additional demand for recycled water. The limitations in this Order are established at levels that will assure no degradation of groundwaters affected by wastewater recycling. Therefore, this discharge is consistent with federal and state antidegradation policies.

45. In accordance with California Water Code Section 13389, the issuance of waste discharge requirements for this discharge is exempt from those provisions of the California Environmental Quality Act contained in Chapter 3 (commencing with Section 21100), Division 13 of the Public Resources Code.

46. The Regional Board has notified the discharger and other interested agencies and persons of its intent to prescribe waste discharge requirements for the discharge and has provided them with an opportunity to submit their written views and recommendations.

47. The Regional Board, in a public meeting, heard and considered all comments pertaining to the discharge.

IT IS HEREBY ORDERED that the discharger, in order to meet the provisions contained in Division 7 of the California Water Code and regulations adopted thereunder and the provisions of the Clean Water Act and regulations and guidelines adopted thereunder, shall comply with the following:

A. DISCHARGE SPECIFICATIONS:

1. These effluent limits are applicable to discharges to the reservoirs and recycled water use. These limits shall be met at each discharge point (Discharge Serial Nos. 003 and 004 and recycled water main trunkline before the first lateral transmission line). The discharge of treated wastewater or the use of recycled water containing constituent concentrations in excess of the following limits is prohibited:

   a. Conventional Pollutants:

Constituent	Average Weekly Concentration (mg/l)	Average Monthly Concentration (mg/l)	Average Weekly Mass Emission Rate [5] (lbs/day)	Average Monthly Mass Emission Rate (lbs/day)
Biochemical Oxygen Demand	30	20	4,504	3,002
Total Suspended Solids	30	20	4,504	3,002

   b. Non-Conventional Pollutants Effluent Limitations:

Constituent	12-Month Average Concentration (mg/l)	12-Month Average Mass Emission Rate (lbs/day)
Fluoride	1	150
Boron	0.75	112

[5] *Mass emission rates for this and all other tables in this Order are based on 18 mgd flow.*

c. TDS/Mineral Limitations: For Discharge Specification A.1.c.(1) and A.1.c.(2), whichever total dissolved solids limit that results in the lower concentration shall be controlling.

(1) The 12-month average constituent concentrations and mass emission rates shall not exceed the values in the following table, unless:

(a) The discharger demonstrates to the satisfaction of the Regional Board's Executive Officer that:

i. Discharges in excess of the following values are due to the quality of water supply sources utilized in the discharger's service area, and that all reasonable steps, as agreed upon by the Executive Officer, have been taken to ensure that the best quality supplies are obtained and utilized in the discharger's service area; or

ii. Discharges in excess of the following values are due solely to chemical additions in the treatment process needed to meet waste discharge requirements, and the discharger has taken all steps to optimize chemical additions so as to minimize the increases; and

(b) The discharger implements a plan, with the approval of the Executive Officer, to offset discharges in excess of the following values.

Constituent	12-Month Average[6] Concentration (mg/l)	12-Month Average Mass Emission Rate (lbs/day)
Total Dissolved Solids	720	108,086
Total Hardness	380	57,046
Chloride	150	22,518
Sodium	125	18,765
Sulfate	240	36,029

[6] *See Provision G. 3.*

(2) The 12-month average total dissolved solids concentration shall not exceed the 12-month average total dissolved solids concentration in the water supply by more than 250 mg/l, unless (See also Provision G.3.):

(a) The discharger demonstrates to the satisfaction of the Regional Board's Executive Officer that TDS discharges in excess of the 250 mg/l mineral increment are due solely to chemical additions in the treatment process needed to meet waste discharge requirements, and the discharger has taken all steps to optimize chemical additions so as to minimize the TDS increases; and

(b) The discharger implements a plan, with the approval of the Executive Officer, to offset TDS discharges in excess of the 250 mg/l mineral increment.

2. Recycled wastewater discharged to the storage reservoirs or used for recycling purposes shall be a filtered and subsequently disinfected wastewater at all times.

a. Filtered wastewater means an oxidized wastewater that meets either (1) or (2):

(1) Has been coagulated and passed through natural undisturbed soils or a bed of filter media pursuant to the following:

(a) At a rate that does not exceed 5 gallons per minute per square foot of surface area in mono, dual or mixed media gravity, upflow or pressure filtration systems, or does not exceed 2 gallons per minute per square foot of surface area in traveling bridge automatic backwash filters, based on peak dry weather design flow; and

(b) The turbidity of the filtered wastewater does not exceed any of the following:

i. An average of 2 Nephelometric Turbidity Unit (NTU) within any calendar day.

ii. 5 NTU more than 5 percent of the time within any calendar day; and

iii. 10 NTU at any time[7].

(2) Has been passed through a microfiltration, ultrafiltration, nanofiltration, or reverse osmosis membrane so that the turbidity of the filtered wastewater does not exceed any of the following:

(a) 0.2 NTU more than 5 percent of the time within any calendar day; and

(b) 0.5 NTU at any time.

---

[7] *See Section G.8., " Compliance Determination."*

b. Disinfected wastewater shall mean a filtered wastewater that has been disinfected and meets the following criteria:

(1) The filtered wastewater has been disinfected by either:

(a) A chlorine disinfection process following filtration that provides a CT (the product of total chlorine residual and modal contact time measured at the same point) value of not less than 450 milligram-minutes per liter at all times with a modal contact time of at least 90 minutes, based on peak dry weather design flow; or

(b) A disinfection process that, when combined with the filtration process, demonstrates inactivation and/or removal of 99.999 percent of the plaque-forming units of F-specific bacteriophage MS2, or polio virus in the wastewater. A virus that is at least as resistant to disinfection as polio virus may be used for purposes of the demonstration. Where ultraviolet (UV) disinfection is used for disinfection, UV disinfection shall deliver under worst operating conditions a minimum UV dose of 140 milli-watts seconds per square centimeter (mW-s/cm2) at maximum weekly flow and 100 mW-s/cm2 at peak flow (maximum day), unless otherwise approved by the Department of Health Services.

(2) The average weekly concentration of total coliform bacteria measured in the disinfected effluent shall not exceed an MPN of 2.2 per 100 milliliters. The average weekly concentration shall be evaluated using the median of the bacteriological results of the last seven days[8.]

(3) The number of total coliform bacteria shall not exceed an MPN of 23 per 100 milliliters in more than one sample in any calendar month.

(4) The number of total coliform bacteria shall not exceed an MPN of 240 per 100 milliliters in any sample.

3. The monthly average biochemical oxygen demand and suspended solids concentrations of the recycled water shall not be greater than fifteen percent (15%) of the monthly average treatment plant influent concentrations.

4. The discharge of any substances in concentrations toxic to animal or plant life in the affected receiving waters is prohibited.

5. There shall be no visible oil and grease in the discharge.

6. The pH of the discharge shall be within 6.5 and 8.5 pH[9].

---

8 *See Section G.8., "Compliance Determination."*

9 *See Section G.7., "Compliance Determination."*

7. Effluent limitations applicable to discharges into Sand Canyon Reservoir and Rattlesnake Reservoir.

   a. Total Chlorine Residual/ Ammonia-Nitrogen

Constituent	Instantaneous Maximum Concentration (mg/l)	Average Monthly Concentration (mg/l)	Average Monthly Mass Rate (lbs/day)
Total Chlorine Residual[10]	0.1	--	--
Ammonia-Nitrogen	--	1.5	225

8. Effluent limitations applicable to discharges into San Diego Creek (Discharge Serial 001).

   a. Only groundwater from dewatering operations at the facility may be discharged from Discharge Serial No. 001.

   b. The discharge of dewatering wastes containing constituent concentrations in excess of the following limits is prohibited:

Constituent	Maximum Daily Concentration Limit (mg/l)	Monthly Average Concentration Limit (mg/l)
Total Nitrogen	--	1[11]
Total Suspended Solids	75	50

9. The discharge of recycled water into the Sand Canyon Reservoir is prohibited between the periods of October 1 through March 1 of each year whenever the reservoir surface water elevation is at or above 176.5 feet[12] above mean sea level. (see also Provision J.6.)

---

10 *See Section G.5., "Compliance Determination."*

11 *The monthly average concentration limit shall not exceed 1 mg/l unless the discharger implements an offset program that achieves nitrogen reduction at least equal to nitrogen discharges in excess of 1 mg/l.*

12 *This elevation corresponds to approximately 200 acre-feet of stored water.*

10. The discharge of recycled water to San Diego Creek or its tributaries, in any other manner is prohibited. Recycled water that is stored in Sand Canyon Reservoir may be discharged to San Diego Creek only when the storm water runoff from the reservoir watershed causes an overflow into the Sand Canyon Wash.

B. TOXICITY REQUIREMENTS:

1. This Order contains no numeric limitation for toxicity. However, the discharger shall conduct chronic toxicity monitoring as specified in Monitoring and Reporting Program (M&RP) No. 01-95 for discharges into the Reservoirs.

2. The discharger shall implement the accelerated monitoring as specified in Section E.4. of M&RP No. 01-95 when the result of any single chronic toxicity test of the effluent exceeds 1.0 TUc.

3. The discharger shall develop an Initial Investigation Toxicity Reduction Evaluation (IITRE) work plan that describes the steps the discharger intends to follow if required by Toxicity Requirement No. 4, below. The work plan shall include at a minimum:

    a. A description of the investigation and evaluation techniques that will be used to identify potential causes/sources of the exceedance, effluent variability, and/or efficiency of the treatment system in removing toxic substances. This shall include a description of an accelerated chronic toxicity testing program.

    b. A description of the methods to be used for investigating and maximizing in-house treatment efficiency and good housekeeping practices.

    c. A description of the evaluation process to be used to determine if implementation of a more detailed TRE\TIE is necessary.

4. The discharger shall implement the IITRE work plan whenever the results of chronic toxicity tests of the effluent exceed:

    a. A two month median value of 1.0 TUc for survival or reproduction endpoint or,

    b. Any single test value of 1.7 TUc for survival endpoint.

5. The discharger shall develop a detailed Toxicity Reduction Evaluation and Toxicity Identification Evaluation (TRE/TIE) work plan that shall describe the steps the discharger intends to follow if the implemented IITRE fails to identify the cause of, or to rectify, the toxicity.

    The discharger shall use as guidance, at a minimum, EPA manuals *EPA/600/2-88/070* (industrial), *EPA/600/4-89-001A* (municipal), *EPA/600/6-91/005F* (Phase I), *EPA/600/R-92/080* (Phase II), and *EPA-600/R-92/081* (Phase III) to identify the cause(s) of toxicity. If the aforementioned EPA manuals are revised or updated during the life of this Order, the revised/updated manuals may also be used as guidance.

6. The detailed TRE/TIE work plan shall include:

   a. Further actions to investigate and identify the cause of toxicity;

   b. Actions the discharger will take to mitigate the impact of the discharge and to prevent the recurrence of toxicity; and

   c. A schedule for these actions.

7. The discharger shall implement the TRE/TIE workplan if the IITRE fails to identify the cause of, or rectify, the toxicity, or if in the opinion of the Executive Officer the IITRE does not adequately address an identified toxicity problem.

8. The discharger shall assure that adequate resources are available to implement the required TRE/TIE.

C. RECEIVING WATER LIMITATIONS[13]:

1. The discharge of wastes shall not cause a violation of any applicable water quality standards for receiving waters adopted by the Board or State Board, as required by the Clean Water Act and regulations adopted thereunder.

2. The discharge shall not cause any of the following:

   a. Coloration of the receiving waters which causes a nuisance or adversely affects beneficial uses.

   b. Deposition of oil, grease, wax or other materials in the receiving waters in concentrations which result in a visible film or in coating objects in the water, or which cause a nuisance or affect beneficial uses.

   c. An increase in the amounts of suspended or settleable solids in the receiving waters which will cause a nuisance or adversely affect beneficial uses as a result of controllable water quality factors.

   d. Taste or odor producing substances in the receiving waters at concentrations which cause a nuisance or adversely affect beneficial uses.

   e. The presence of radioactive materials in the receiving waters in concentrations which are deleterious to human, plant or animal life.

   f. The depletion of the dissolved oxygen concentration below 5.0 mg/l.

---

13 *Receiving water limitations are specific interpretations of water quality objectives from applicable water quality control plans. As such they are a required part of this Order. A receiving water condition not in conformance with any of these receiving water limitations, is not necessarily a violation of this Order. The Regional Board may require an investigation to determine the cause and culpability prior to asserting a violation that has occurred, or requiring that corrective action be taken.*

g. The temperature of the receiving waters to be raised above 90°F (32°C) during the period of June through October, or above 78°F (26°C) during the rest of the year.

h. The concentration of pollutants in the water column, sediments, or biota to adversely affect the beneficial uses of the receiving water. The discharge shall not result in the degradation of inland surface water communities and populations, including vertebrate, invertebrate, and plant species.

3. Pollutants not specifically mentioned and limited in this Order shall not be discharged at levels that will bioaccumulate in aquatic resources to levels which are harmful to human health.

4. The discharge shall not contain constituent concentrations of mercury that will result in the bioaccumulation of methylmercury in fish flesh tissue greater than 0.3 mg methylmercury/kg fish.

D. STORM WATER REQUIREMENTS:

1. Storm water[14] discharges from the Michelson Water Reclamation Plant shall not:

a. cause or contribute to a violation of any applicable water quality standards contained in the Basin Plan, or in the State or Federal regulations.

b. cause or threaten to cause pollution, contamination, or nuisance.

c. contain a hazardous substance equal to or in excess of a reportable quantity listed in 40 CFR Part 117 and/or 40 CFR Part 302.

d. adversely impact human health or the environment.

e. result in noncompliance with the lawful requirements of municipalities, counties, drainage districts, and other local agencies on storm water discharges into storm drain systems or other courses under their jurisdiction.

2. The discharger shall develop and implement a Storm Water Pollution Prevention Plan for the treatment facility in accordance with Attachment "A" of this Order. The discharger shall update as necessary and implement the Storm Water Pollution Prevention Plan.

---

14 *Storm water means storm water runoff and surface runoff drainage.*

E. PRETREATMENT REQUIREMENTS:

1. The discharger shall ensure that the POTW[15] pretreatment program for all contributory agencies to the treatment facility are implemented and enforced. The discharger shall be responsible and liable for the performance of all Control Authority pretreatment requirements contained in 40 CFR 403, including any subsequent regulatory revisions to Part 403. Where Part 403 or subsequent revisions place mandatory actions upon the discharger as Control Authority but does not specify a timetable for completion of the actions, the discharger shall submit for approval of the Regional Board's Executive Officer, a schedule for implementation of the required actions and shall implement the approved schedule. The schedule for implementation shall be submitted within six months from the date that such mandatory actions are established. For violations of pretreatment requirements, the discharger shall be subject to enforcement actions, penalties, fines and other remedies by the EPA, or other appropriate parties, as provided in the CWA, as amended (33 USC 1351 et seq.). The EPA or the Regional Board may also initiate enforcement action against an industrial user (IU) for non-compliance with applicable standards and requirements as provided in the CWA.

2. The discharger shall enforce the requirements promulgated under Sections 307(b), 307(c), 307(d), and 402(b) of the CWA with timely, appropriate and effective enforcement actions. The discharger, in cooperation with OCSD or independently, shall cause industrial users (IUs) subject to the Federal Categorical Standards to achieve compliance no later than the date specified in those requirements or, in the case of a new IU, upon commencement of the discharge.

3. The discharger, in cooperation with OCSD or independently, shall perform the pretreatment functions as required in 40 CFR Part 403 including, but not limited to:

    a. Enforce the pretreatment requirements under 40 CFR 403.5 and 403.6;

    b. Implement the necessary legal authorities as provided in 40 CFR 403.8(f)(1);

    c. Implement the programmatic functions as provided in 40 CFR 403.8(f)(2);

    d. Publish a list of significant non-compliance as required by 40 CFR 403.8(f)(2)(vii), and

    e. Provide the requisite funding and personnel to implement the pretreatment program as provided in 40 CFR 403.8(f)(3).

4. The following wastes shall not be introduced into the treatment works:

    a. Wastes which create a fire or explosion hazard in the treatment works;

---

15 *Publicly owned treatment works*

b. Wastes which will cause corrosive structural damage to treatment works, but, in no case, wastes with a pH lower than 5.0 unless the works are designed to accommodate such wastes;

c. Wastes at a flow rate and/or pollutant discharge rate which is excessive over relatively short time periods so that there is a treatment process upset and subsequent loss of treatment efficiency;

d. Solid or viscous wastes in amounts which would cause obstruction to the flow in sewers or otherwise interfere with the proper operation of the treatment works.

5. The discharger shall enforce, in cooperation with OCSD or independently, any existing or future pretreatment standard promulgated by EPA under Section 307 of the CWA or amendments thereto for any discharge to the municipal system.

6. The discharger shall comply with effluent standards or prohibitions established under Section 307(a) of the CWA for toxic pollutants within the time provided in the regulations that establish these standards or prohibitions, even if this Order has not yet been modified to incorporate the requirement.

7. The discharger shall require each user not in compliance with any pretreatment standard to submit periodic notice (over intervals not to exceed nine months) of progress toward compliance with applicable toxic and pretreatment standards developed pursuant to the CWA or amendments thereto. The discharger shall forward a copy of such notice to the Regional Board and to the EPA Regional Administrator.

F. WATER RECYCLING REQUIREMENTS:

1. Recycling of treated effluent wastewater is prohibited when any of the following conditions occur:

   a. Failure of chlorination equipment.

   b. Effluent total coliform MPN is greater than 240/100 milliliters.

   c. Turbidity of treated effluent is greater than 10 NTU.

   d. The CT (contact time) is less than 450 (mg-min)/l.

2. The discharger shall implement and enforce onsite use regulations that require recycled water to be delivered and utilized in conformance with this Order, the water recycling criteria contained in Title 22, Division 4, Chapter 3, Sections 60301 through 60355, California Code of Regulations, June 2001 Edition, and the "Guidelines for Preparation of an Engineering Report for the Production, Distribution and Use of Reclaimed Water" approved in March 2001 by the California Department of Health Services. The discharger shall conduct periodic inspections of the facilities of the recycled water users to monitor compliance by the users with the onsite use regulations.

3. The discharger shall establish and enforce rules and regulations for recycled water users, governing the design and construction of recycled water use facilities and the use of recycled water in accordance with the uniform statewide reclamation criteria established pursuant to the California Water Code Section 13521.

    a. Use of recycled water by the discharger shall be consistent with its Rules and Regulations for Recycled Water Use.

    b. Any revisions made to the Rules and Regulations shall be subject to the review of the Regional Board, the State Department of Health Services, and the Orange County Health Care Agency. The revised Rules and Regulations or a letter certifying that the discharger's Rules and Regulations contain the updated provisions in this Order, shall be submitted to the Regional Board within 60 days of adoption of this Order by the Regional Board.

4. The discharger shall, within 60 days of the adoption of this Order, review and update if necessary, its program to conduct compliance inspections of recycled water reuse sites. Inspections shall determine the status of compliance with the discharger's Rules and Regulations for Recycled Water Use.

5. The storage, delivery, or use of recycled water shall not individually or collectively, directly or indirectly, result in a pollution or nuisance, or adversely affect water quality, as defined in the California Water Code.

6. Prior to delivering recycled water to any new user[16], the discharger shall submit to the Regional Board, the California Department of Health Services and the Orange County Health Department a report containing the following information for review and approval:

    a. The average number of persons estimated to be served at each use site area on a daily basis.

    b. The specific boundaries of the proposed use site area including a map showing the location of each facility, drinking water fountain, and impoundment to be used.

    c. The person or persons responsible for operation of the recycled water system at each use area.

    d. The specific use to be made of the recycled water at each use area.

    e. The methods to be used to assure that the installation and operation of the recycled system will not result in cross connections between the recycled water and potable water piping systems. This shall include a description of the pressure, dye or other test methods to be used to test the system.

---

16 *New user is defined as those who plan to use recycled water and are not currently being supplied by the discharger with recycled water. Transfer of ownership from one currently using recycled water to another who is not currently using recycled water does not qualify as a new user.*

f. Plans and specifications which include following:

1) Proposed piping system to be used.

2) Pipe locations of both the recycled and potable systems.

3) Type and location of the outlets and plumbing fixtures that will be accessible to the public.

4) The methods and devices to be used to prevent backflow of recycled water into the potable water system.

5) Plan notes relating to specific installation and use requirements.

7. An on-site supervisor responsible for the operation of the recycled water distribution system shall be designated by the discharger. The supervisor shall be responsible for enforcing this Order, prevention of potential hazards, the installation, operation and maintenance of the distribution system, maintenance of the distribution and irrigation system plans in "as-built" form, and for the distribution of the recycled wastewater in accordance with this Order.

G. COMPLIANCE DETERMINATION:

1. The "maximum daily" concentration is defined as the measurement made on any single grab sample or composite sample.

2. Compliance with average weekly and monthly discharge limitations specified under Discharge Specifications A.1. and A.2. shall be determined from the average of the analytical results of all samples collected during a calendar week or month, respectively. Where a calendar week overlaps two different months, compliance shall be determined for the month in which the week ends.

3. Compliance with the 12-month average limit under Discharge Specifications A.1.c and A.1.d. shall be determined by the arithmetic mean of the last twelve monthly averages.

4. The discharger shall be deemed out of compliance with an effluent limitation if the concentration of the priority pollutant in the monitoring sample is greater than the effluent limitation.

a. Until June 1, 2002, compliance determination shall be based on the practical quantitation levels[17] (PQL) specified in Attachment "A" of M&RP No. 01-95 or on the lower reporting level that may reasonably be achieved by the discharger with prior approval by the Executive Officer of the Regional Board.

---

17 *PQL is the lowest concentration of a substance which can be determined within ± 20 percent of the true concentration by 75 percent of the analytical laboratories tested in a performance evaluation study. Alternatively, if performance data are not available, the PQL is the method detection limit (MDL) x 5 for carcinogens and MDL x 10 for noncarcinogens.*

b. As of June 1, 2002, compliance determination shall be based on the quantification levels specified in Attachment "B" of the Monitoring and Reporting Program No. 01-95, unless an alternative minimum level[18] (ML) is approved by the Regional Board's Executive Officer.

c. When determining compliance with an average monthly limit and more than one sample result is available in a month, the discharger shall compute the arithmetic mean unless the data set contains one or more reported determinations of detected but not quantified (DNQ) or not detected (ND). In those cases, the discharger shall compute the median in place of the arithmetic mean in accordance with the following procedure:

1) The data set shall be ranked from low to high, reported ND determinations lowest, DNQ determinations next, followed by quantified values (if any). The order of the individual ND or DNQ determinations is unimportant.

2) The median value of the data set shall be determined. If the data set has an odd number of data points, then the median is the middle value. If the data set has an even number of data points, then the median is the average of the two values around the middle unless one or both of the points are ND or DNQ, in which case the median value shall be the lower of the two data points where DNQ is lower than a value and ND is lower than DNQ. If a sample result, or the arithmetic mean or median of multiple sample results, is below the reported ML, and there is evidence that the priority pollutant is present in the effluent above an effluent limitation and the discharger conducts a pollutant minimization program (PMP)[19] (as described in Section J.7.), the discharger shall not be deemed out of compliance.

5. Compliance determinations for total chlorine residual shall be determined at the boundary of the zone of initial dilution approved by the Regional Board Executive Officer. (see also Required Notices and Reports 7)

---

18 *The goal of the PMP shall be to reduce all potential sources of a priority pollutant(s) through pollutant minimization (control) strategies, including pollution prevention measures as appropriate, to maintain the effluent concentration at or below the water quality-based effluent limitation.*

19 *The goal of the PMP shall be to reduce all potential sources of a priority pollutant(s) through pollutant minimization (control) strategies, including pollution prevention measures as appropriate, to maintain the effluent concentration at or below the water quality-based effluent limitation.*

6. Compliance determinations for ammonia nitrogen shall be determined at the boundary of the zone of initial dilution approved by the Regional Board Executive Officer. (see also Required Notices and Reports 8)

7. Pursuant to 40 CFR 401.17, the discharger shall be in compliance with the pH limitation specified in this Order (Discharge Specifications A.6., above), provided that both of the following conditions are satisfied:

   a. The total time during which the pH values are outside the required range of 6.5-8.5 pH values shall not exceed 7 hours and 26 minutes in any calendar month; and

   b. No individual excursion from the range of pH values shall exceed 60 minutes.

8. Exceedance of the "10 NTU at any time" turbidity requirement referenced in Discharge Specifications A.2.a. shall not be considered a violation of these waste discharge requirements if such exceedance does not exceed a duration of one minute. The discharger shall not be considered to be in violation of this requirement if the apparent exceedance was caused by interference with, or malfunction of, the monitoring instrument. If the discharger is using a properly operating backup turbidimeter, the reading of the backup turbidimeter shall be considered in determining whether there has been an actual noncompliance.

9. Compliance with the weekly average total coliform limit expressed in Discharge Specification A.2.b.(2) shall be based on a running median of the test results from the previous 7 days. To comply with the weekly average limit, the 7-day median MPN must not exceed 2.2 per 100 milliliters on any day during the week. However, only one violation is recorded for each week, even if the 7-day median MPN value is greater than 2.2 for more than one day in the week.

10. Compliance determinations shall be based on available analyses for the time interval associated with the effluent limitation. Where only one sample analysis is available in a specified time interval (e.g., monthly or weekly average), that sample shall serve to characterize the discharge for the entire interval. If quarterly sample result shows noncompliance with the average monthly limit and that sample result is used for compliance determinations for each month of the quarter, then three separate violations of the average monthly limit shall be deemed to have occurred.

11. Compliance with a single effluent limitation which applies to a group of chemicals (e.g., PCBs), based on a single sample shall be determined by considering the concentrations of individual members of the group to be zero if the analytical response for the individual chemical falls below the method detection limit (MDL or PQL) for that chemical.

12. For non-priority pollutants, compliance based on a single sample analysis shall be determined where appropriate, as described below:

a. When the effluent limitation is greater than or equal to the PQL, compliance shall be determined based on the effluent limitation in either single or multiple sample analyses.

b. When the effluent limitation is less than the PQL, compliance determinations based on analysis of a single sample shall only be undertaken if the concentration of the constituent of concern in the sample is greater than or equal to the PQL.

13. For non- priority pollutants, the discharge shall be considered to be in compliance with an effluent limitation which is less than or equal to the PQL specified in Attachment "A" of M&RP No. 01-95 if the arithmetic mean of all test results for the monitoring period is less than the constituent effluent limitation. Analytical results that are less than the specified PQL shall be assigned a value of zero.

14. "Upset" means an exceptional incident in which there is unintentional and temporary noncompliance with permit effluent limitations because of factors beyond the reasonable control of the discharger. An upset does not include noncompliance to the extent caused by operational error, improperly designed treatment facilities, inadequate treatment facilities, lack of preventive maintenance, or careless or improper action. A discharger that wishes to establish the affirmative defense of an upset in an action brought for noncompliance shall demonstrate, through properly signed, contemporaneous operating logs, or other relevant evidence that:

a. an upset occurred and that the discharger can identify the cause(s) of the upset:

b. the permitted facility was being properly operated at the time of the upset;

c. the discharger submitted notice of the upset as required in Section H.13., below;

d. the discharger complied with any remedial measures required under Section J. 11., below.

No determination made before an action for noncompliance, such as during administrative review of claims that noncompliance was caused by an upset, is final administrative action subject to judicial review. In any enforcement proceeding, the discharger seeking to establish the occurrence of an upset has the burden of proof.

H. REQUIRED NOTICES AND REPORTS:

1. Reporting Provisions:

a. All applications, reports, or information submitted to the Regional Board shall be signed and certified in accordance with 40 CFR 122.22 except as otherwise specified by the Regional Board's Executive Officer.

b. The discharger shall furnish, within a reasonable time, any information the Regional Board or EPA may request to determine compliance with this Order or whether cause exists for modifying, revoking and reissuing, or terminating this Order. The dis-

charger shall also furnish to the Regional Board, upon request, copies of records required to be kept by this Order.

c. Except for data determined to be confidential under Section 308 of the CWA, all reports prepared in accordance with the terms of this Order shall be available for public inspection at the offices of the Regional Board and the Regional Administrator of EPA. As required by the CWA, effluent data shall not be considered confidential. Knowingly making any false statements on any such report may result in the imposition of criminal penalties as provided for in Section 309 of the CWA and Section 13387 of the California Water Code.

2. By March 1, 2002, the discharger shall submit an updated written description of electrical power failure safeguards. Such safeguards may include alternate power sources, standby generators, retention capacity, operating procedures, or other means. The description of the safeguards provided shall include an analysis of the frequency, duration, and impact of power failures experienced over the past year(s) of treatment plant operation on effluent quality and on the capability of the discharger to comply with the requirements of this Order. Deficiencies in present safeguards must be identified together with a plan for any necessary corrective actions. The adequacy of the safeguards and the corrective action plan (if necessary) is subject to the approval of the Executive Officer.

3. By March 1, 2002, the discharger shall submit an updated technical report on the discharger's preventive (failsafe) and contingency (response and cleanup) plans for controlling accidental discharges and for minimizing the effect of such events. This technical report may be combined with that required under Section H.2., above. The technical report shall:

   a. Identify the possible sources of accidental loss, untreated waste bypass, and contaminated drainage. Loading and storage areas, power outage, waste treatment outage, and failure of process equipment, tanks, and pipes should be considered.

   b. Evaluate the effectiveness of present facilities and procedures and state when they become operational.

   c. Describe any new facilities and procedures needed. Predict the effectiveness of the proposed facilities and procedures and provide an implementation schedule containing interim and final dates when they will be constructed, implemented, or operational.

   d. Describe proposed and completed training programs and schedules to train and familiarize plant operating personnel with the discharger's preventive (failsafe) and contingency (response and cleanup) plans for controlling accidental discharges and for minimizing the effect of such events.

4. By March 1, 2002, the discharger shall submit a copy of the Initial Investigation Toxicity Reduction Evaluation work plan specified in Toxicity Requirement B.3 of this Order. TRE/TIE workplan

5. By March 1, 2002, the discharger shall submit a copy of the TRE/TIE work plan specified in Toxicity Requirement B.5 of this Order.

6. By March 1, 2002, the discharger shall submit for approval by the Executive Officer, a report which details the manner in which sampling, monitoring and reporting will be performed as required in this Order.

7. By March 1, 2002, the discharger shall submit for approval by the Executive Officer, a report which details a proposed focused investigation to determine the zone of initial dilution for total chlorine residual in the Sand Canyon and Rattlesnake Reservoirs. (see Findings 26)

8. By March 1, 2002, the discharger shall submit for approval by the Executive Officer, a report which details a proposed focused investigation to determine the zone of initial dilution for ammonia nitrogen in the Sand Canyon and Rattlesnake Reservoirs. (see Findings 27)

9. The discharger shall give advance notice to the Regional Board of any planned physical alterations or additions to the permitted facility or changes in operation or activity that may result in noncompliance with these waste discharge requirements.

10. The discharger shall provide adequate notice to the Regional Board of:

    a. Any new introduction of pollutants into the POTW from an indirect discharger that would be subject to Sections 301 or 306 of the CWA if it were directly discharging those pollutants.[20]

    b. Any change in the volume or character of pollutants being introduced by an existing or new source into the treatment facility that will cause or threaten to cause a violation of this Order.

    c. Any planned changes in the discharger's biosolids use or disposal practice, or provision of additional disposal sites not reported during the permit application process.

    d. Any proposed change in the character, location, or method of disposal of the discharge, or any proposed change in ownership of the facility.

    e. All instances of noncompliance. Reports of noncompliance shall be submitted with the discharger's next scheduled self-monitoring report or earlier, as specified in this Order, or if requested by the Executive Officer, or if required by an applicable standard for biosolids use and disposal.

11. The discharger shall file with the Regional Board within sixty days of adoption of this Order, the revised Rules and Regulations or letter as specified in Water Recycling Requirements F.3.b.

---

[20] *Adequate notice shall include information on the quality and quantity of effluent introduced, and any anticipated impact of the change on the quantity or quality of the discharger's effluent and/or biosolids.*

12. The discharger shall file with the Regional Board the documents required in Section F.4., above, prior to delivering recycled water to any new user.

13. The discharger shall file a written report with the Regional Board within ninety (90) days after the average dry-weather waste flow for any month equals or exceeds 75 percent of the design capacity of the waste treatment and/or disposal facilities. The discharger's senior administrative officer shall sign a letter which transmits that report and certifies that the policy making body is adequately informed about it. The report shall include:

    a. Average daily flow for the month, the date on which the instantaneous peak flow occurred, the rate of that peak flow, and the total flow for the day.

    b. The discharger's best estimate of when the average daily dry-weather flow rate will equal or exceed the design capacity of the treatment facilities.

    c. The discharger's intended schedule for studies, design, and other steps needed to provide additional capacity for the waste treatment and/or disposal facilities before the waste flow rate equals the capacity of present units.

14. The discharger shall file with the Regional Board a Report of Waste Discharge at least 180 days before making any material change in the character, location, or volume of the discharge. A material change includes, but is not limited to, the following:

    a. Adding a major industrial waste discharge to a discharge of essentially domestic sewage, or adding a new process or product by an industrial facility resulting in a change in the character of the waste.

    b. Significantly changing the disposal method or location, such as changing the disposal to another drainage area or water body.

    c. Significantly changing the method of treatment.

    d. Increasing the treatment plant design capacity beyond that specified in this Order.

15. The discharger shall submit a Title 22 Engineering Report for review and approval by the Department of Health Services at least 180 days before making any of the material changes in the recycling plant[21] or recycled water agency[22], including the changes identified in H. 14. b., c., and d. above. The Engineering Report shall be in compliance with the California Code of Regulations, Title 22, Chapter 3.

---

21 *"Recycling plant" means an arrangement of devices, structures, equipment, processes and control which produce recycled water.*

22 *"Recycled water agency" means the public water system, or a public or private owned or operated recycled water system, that delivers or proposes to delivers recycled water to a facility.*

16. The discharger shall immediately report any condition related to the discharge of waste from discharger's collection, treatment or disposal facilities that may endanger human health or the environment including any unauthorized discharge not regulated by this Order of treated, partially treated, or untreated wastewater from the discharger's collection, treatment, or disposal system in excess of 1000 gallons within a single continuous event or within a calendar day. All available information concerning the condition and/or unauthorized discharge shall be provided to the Executive Officer or the Executive Officer's designee (909-782-4130) and the Office of Emergency Services (1-800-852-7550), as soon as the discharger becomes aware of the circumstances. A written report shall be submitted within 5 days and shall contain a description of the condition and its cause; the duration of the condition, including exact dates and times, and, if the condition has not been corrected, the anticipated time it is expected to continue; and the steps taken or planned to reduce, eliminate, and prevent recurrence of the condition, with a schedule for their implementation. The following shall be included as information that must be reported within 24 hours under this paragraph:

    a. Any unanticipated bypass that exceeds any requirement of this Order.

    b. Any upset that exceeds any requirement of this Order.

    c. Any violation of a maximum daily discharge limitation for any of the pollutants listed in this Order.

    d. Any unauthorized discharge not regulated by this Order of treated, partially treated, or untreated wastewater resulting from the intentional or unintentional diversion of wastewater from a collection, treatment or disposal system.

    e. The Executive Officer or the Executive Officer's designee may waive the above required written report on a case-by-case basis.

    f. Unauthorized discharges of 50,000 gallons or more of "disinfected tertiary 2.2 recycled water" as defined or described by the State Department of Health Services (DHS) or wastewater receiving advanced treatment beyond disinfected tertiary 2.2 recycled water.

    g. Unauthorized discharges of 1,000 gallons or more of recycled water, which is treated at a level less than "disinfected tertiary 2.2 recycled water," as defined or described by DHS.

    Discharges of less than 1000 gallons within a single continuous event or within a calendar day that do not endanger human health or the environment shall be reported to the Executive Officer's designee no later than the last day of the month following the month the discharges occurred.

    Discharges that result from operations and maintenance of the treatment plant and that are returned to the treatment process or headworks do not constitute reportable events under this Section.

I. PENALTIES:

1. Violation of any of the provisions of the NPDES program or of any of the provisions of this Order may subject the violator to any of the penalties described under Section 309(c) of the CWA, or any subsequent amendments to Section 309(c). The violator may be subjected to any combination of the penalties described herein at the discretion of the prosecuting authority; however, only one kind of penalty may be applied for each kind of violation.

2. The CWA provides that any person who violates any portion of this Order implementing Sections 301, 302, 306, 307, 308, 318, or 405 of the CWA, or any order requirement or limitation implementing any such sections in this Order, is subject to a civil penalty not to exceed $25,000 per day for each violation. The CWA provides that any person who willfully or negligently violates this Order with regard to these sections of the CWA is subject to criminal penalties of $2,500 to $25,000 per day of violation, or imprisonment of not more than 1 year, or both. Any person who knowingly violates a provision implementing these sections is subject to criminal penalties of $5,000 to $50,000 per day of violation, or imprisonment of not more than 3 years, or both.

3. The CWA provides that any person who knowingly falsifies, tampers with, or knowingly renders inaccurate any monitoring device or method required to be maintained under this Order shall, upon conviction, be punished by a fine of not more than $10,000 per violation, or by imprisonment for not more than 2 years per violation, or by both.

4. The CWA provides that any person who knowingly makes any false statement, representation, or certification in any record or other document submitted or required to be maintained under this Order, including monitoring reports or reports of compliance or noncompliance shall, upon conviction, be punished by a fine of not more than $10,000 per violation, or by imprisonment for not more than 2 years per violation, or by both.

5. The California Water Code provides that any person who violates an order of the Regional Board is subject to civil penalties of up to $25,000 per day of violation, and when the violation involves the discharge of pollutants, additional civil penalties of up to $25 per gallon.

J. PROVISIONS:

1. This Order shall serve as a National Pollutant Discharge Elimination System permit pursuant to Section 402 of the CWA, or amendments thereto, that shall become effective 10 days after the date of adoption, provided the Regional Administrator of the EPA has no objection. If the Regional Administrator objects to its issuance, this Order shall not serve as an NPDES permit until such objection is withdrawn.

2. Neither the treatment nor discharge of waste shall create, or threaten to create, a nuisance or pollution as defined by Section 13050 of the California Water Code.

3. Order No. 94-22 is hereby rescinded.

4. This Order expires December 1, 2006 and the discharger must file a Report of Waste Discharge in accordance with Title 23, Division 3, Chapter 9 of the California Code of Regulations not later than 180 days in advance of this expiration date. The Report of Waste Discharge shall serve as the application for issuance of new waste discharge requirements.

5. The discharger shall comply with M&RP No. 01-95. This monitoring and reporting program may be modified by the Executive Officer at any time during the term of this Order to include an increase in the number of parameters to be monitored, the frequency of the monitoring or the number and size of samples to be collected. Any such modifications may be reduced back to the levels specified in the original monitoring and reporting program at the discretion of the Executive Officer.

6. The discharger shall provide a permanent measuring device at the Sand Canyon Reservoir that shows surface water elevation based on mean sea level datum line. The device shall be accessible and elevation markings shall be easily readable.

7. Recycled water may be used for irrigation within the San Joaquin Marsh, provided that there is no direct discharge of recycled water from the marsh to San Diego Creek. Recycled water may be used for irrigation of riparian areas of the Marsh and as a supplemental water supply (if necessary) to support the development of grass or grain crops in the marsh ponds during the dry season, provided all reasonable steps are taken to minimize recycled water runoff and commingling of recycled water with other waters.

8. The discharger shall conduct a controlled and intensive monitoring program for bis (2-ethylhexyl) phthalate for one year until December 7, 2002, using methods, equipment and processes that will prevent contamination of effluent samples during sampling and testing and assure reliability of testing results. The discharger's testing laboratory shall be able to achieve a minimum detection level of 5 micrograms per liter for quantifying bis (2-ethylhexyl) phthalate concentrations in the effluent.

9. The discharger shall maintain a copy of this Order at the Michelson Water Reclamation Plant so that it is available to site operating personnel at all times. Key operating personnel shall be familiar with its content.

10. The discharger must comply with all of the requirements of this Order. Any violation of this Order constitutes a violation of the California Water Code and may constitute a violation of the CWA and its regulations, and is grounds for enforcement action, termination of this Order, revocation and re-issuance of this Order, denial of an application for re-issuance of this Order; or a combination thereof.

11. The discharger shall conduct a Pollutant Minimization Program (PMP) when there is evidence that the priority pollutant is present in the effluent above an effluent limitation (e.g., sample results reported as detected but not quantified (DNQ) when the effluent limitation established in this Order is less than the MDL, sample results from analytical methods more sensitive than those methods included in this Order, presence of whole effluent toxicity, health advisories for fish consumption, results of benthic or aquatic organism tissue sampling) and either: (i). A sample result is reported as DNQ and the effluent limitation is less than the reported ML; or (ii). A sample result is reported as ND and the effluent limitation is less than the MDL. The PMP shall include, but not be limited to, the following actions and submittals acceptable to the Regional Board:

    a. An annual review and semi-annual monitoring of potential sources of the reportable priority pollutant(s), which may include fish tissue monitoring and other bio-uptake sampling;

    b. Quarterly monitoring for the reportable priority pollutant(s) in the influent to the wastewater treatment system;

    c. Submittal of a control strategy designed to proceed toward the goal of maintaining concentrations of the reportable priority pollutant(s) in the effluent at or below the effluent limitation;

    d. Implementation of appropriate cost-effective control measures for the reportable priority pollutant(s), consistent with the control strategy; and

    e. An annual status report that shall be sent to the Regional Board including:

        (1) All PMP monitoring results for the previous year;
        (2) A list of potential sources of the reportable priority pollutant(s);
        (3) A summary of all actions undertaken pursuant to the control strategy; and
        (4) A description of actions to be taken in the following year.

12. The discharger shall take all reasonable steps to:

    a. minimize or prevent any discharge that has a reasonable likelihood of adversely affecting human health or the environment.

    b. minimize any adverse impact to receiving waters resulting from noncompliance with any requirements specified in this Order, including such accelerated or additional monitoring as necessary to determine the nature and impact of the noncomplying discharge.

13. The discharger shall provide safeguards to assure that should there be reduction, loss, or failure of electric power, the discharger will comply with the requirements of this Order.

14. The discharger shall, at all times, properly operate and maintain all facilities and systems of treatment and control including biosolids use, disposal facilities, and related appurtenances which are installed or used by the discharger to achieve compliance with this Order. Proper operation and maintenance includes adequate laboratory controls, appropriate quality assurance procedures, effective performance, adequate funding, adequate staffing and training, and adequate process controls. This provision requires the operation of back up or auxiliary facilities or similar systems that are installed by a discharger only when the operation is necessary to achieve compliance with the requirements of this Order.

15. The discharger shall update as necessary, the "Operation and Maintenance Manual (O&M Manual)" which it has developed for the Michelson Water Reclamation Plant to conform with latest plant changes and requirements. The O&M Manual shall be readily available to operating personnel onsite. The O&M Manual shall include the following:

    a. Description of the treatment plant table of organization showing the number of employees, duties and qualifications and plant attendance schedules (daily, weekends and holidays, part-time, etc). The description should include documentation that the personnel are knowledgeable and qualified to operate the treatment facility so as to achieve the required level of treatment at all times.

    b. Detailed description of safe and effective operation and maintenance of treatment processes, process control instrumentation and equipment.

    c. Description of laboratory and quality assurance procedures.

    d. Process and equipment inspection and maintenance schedules.

    e. Description of safeguards to assure that, should there be reduction, loss, or failure of electric power, the discharger will be able to comply with requirements of this Order.

    f. Description of preventive (fail-safe) and contingency (response and cleanup) plans for controlling accidental discharges, and for minimizing the effect of such events. These plans shall identify the possible sources (such as loading and storage areas, power outage, waste treatment unit failure, process equipment failure, tank and piping failure) of accidental discharges, untreated or partially treated waste bypass, and polluted drainage.

16. The discharger's wastewater reclamation plant shall be supervised and operated by persons possessing certificates of appropriate grade pursuant to Title 23, Division 3, Chapter 14, California Code of Regulations.

17. The discharge of any radiological, chemical, or biological warfare agent or high level radiological waste is prohibited.

18. The provisions of this Order are severable, and if any provision of this Order, or the application of any provisions of this Order to any circumstance, is held invalid, the application of such provision to other circumstances, and the remainder of this Order shall not be affected thereby.

19. The filing of a request by the discharger for modification, revocation and re-issuance, or termination of this Order or a notification of planned changes or anticipated noncompliance does not stay any requirements of this Order.

20. The requirements prescribed herein do not authorize the commission of any act causing injury to the property of another, nor protect the discharger from liabilities under federal, state, or local laws, nor guarantee the discharger a capacity right in the receiving waters.

21. This Order does not convey any property rights of any sort, or any exclusive privilege.

22. This Order is not transferable to any person except after notice to, and approval by the Executive Officer. The Regional Board may require modification or revocation and re-issuance of this Order to change the name of the discharger and incorporate such other requirements as may be necessary under the CWA.

23. Collected screenings, biosolids, and other solids removed from liquid wastes shall be disposed of in a manner approved by the Regional Board's Executive Officer.

24. If the discharger demonstrates a correlation between the biological oxygen demand (BOD) and total organic carbon (TOC) concentrations in the effluent to the satisfaction of the Executive Officer, compliance with the BOD limits contained in this Order may be determined based on analyses of the TOC of the effluent.

25. In the event of any change in control or ownership of land or waste discharge facility presently owned or controlled by the discharger, the discharger shall notify the succeeding owner or operator of the existence of this Order by letter, a copy of which shall be forwarded to the Regional Board.

26. It shall not be a defense for a discharger in an enforcement action that it would have been necessary to halt or reduce the permitted activity in order to maintain compliance with the requirements of this Order.

27. Bypass (the intentional diversion of waste streams from any portion of a treatment facility or collection system) is prohibited unless it is permitted under the terms of this Order. The Regional Board may take enforcement action against the discharger for unpermitted bypass unless:

    a. Bypass was unavoidable to prevent loss of life, personal injury, or severe property damage. (Severe property damage means substantial physical damage to property, damage to the treatment facilities that causes them to become inoperable, or substantial and permanent loss of natural resources that can reasonably be expected to occur in the absence of a bypass. Severe property damage does not mean economic loss caused by delays in production.);

    b. There were no feasible alternative to bypass, such as the use of auxiliary treatment facilities, retention of untreated waste, or maintenance during normal periods of equipment down time. This condition is not satisfied if adequate back-up equipment should have been installed in the exercise of reasonable engineering judgment to prevent a bypass that could occur during normal periods of equipment down time or preventive maintenance; and

    c. The discharger submitted a notice to the Regional Board at least ten days in advance of the need for a bypass, except in emergency situation described in H.13.a. The discharger may allow a bypass to occur that does not cause effluent limitations to be exceeded, but only if the by-pass is required for essential maintenance to assure efficient operation, and neither effluent nor receiving water limitations are exceeded. In such a case, the above bypass conditions are not applicable. The discharger shall promptly notify the Regional Board and the EPA within 24 hours of each such bypass.

28. The Regional Board, EPA, and other authorized representatives shall be allowed:

    a. Entry upon premises where a regulated facility or activity is located or conducted, or where records are kept under the requirements of this Order;

    b. Access to copy any records that are kept under the requirements of this Order;

    c. To inspect any facility, equipment (including monitoring and control equipment), practices, or operations regulated or required under this Order; and

    d. To photograph, sample and monitor for the purpose of assuring compliance with this Order, or as otherwise authorized by the CWA.

K. PERMIT RE-OPENING, REVISION, REVOCATION, AND RE-ISSUANCE:

1. This Order may be modified, revoked and reissued, or terminated for cause.

2. This Order may be reopened to address any changes in State or federal plans, policies or regulations which would affect the quality requirements for the discharges.

3. This Order may be reopened to include effluent limitations for pollutants determined to be present in the discharge in concentrations that pose a reasonable potential to cause or contribute to violations of water quality objectives.

4. This Order may be reopened to consider revised effluent limitations if the Regional Board or the discharger develops different site-specific total-to-dissolved ratios for cadmium, copper, and lead, which are acceptable to the Regional Board's Executive Officer.

5. This Order may be reopened and modified in accordance with the requirements set forth at 40 CFR 122 and 124, to include the appropriate conditions or limits to address demonstrated effluent toxicity based on newly available information, or to implement any EPA-approved new State water quality standards applicable to effluent toxicity.

6. This Order may be reopened to incorporate appropriate biosolids requirements if the State Water Resources Control Board and the Regional Water Quality Control Board are given the authority to implement regulations contained in 40 CFR 503.

I, Gerard J. Thibeault, Executive Officer, do hereby certify that the foregoing is a full, true, and correct copy of an Order adopted by the California Regional Water Quality Control Board, Santa Ana Region, on December 19, 2001.

_____

Gerard J. Thibeault
Executive Officer

STORM WATER POLLUTION PREVENTION PLAN REQUIREMENTS

1. *Implementation Schedule*

A storm water pollution prevention plan (SWPPP) shall be developed and implemented in a timely manner, but in no case later than January 1, 2002. The SWPPP shall be updated as necessary in accordance with the following requirements.

2. *Objectives*

The SWPPP has two major objectives: (a) to identify and evaluate sources of pollutants associated with industrial activities that may affect the quality of storm water discharges and authorized non-storm water discharges from the facility; and (b) to identify and implement site-specific best management practices (BMPs) to reduce or prevent pollutants associated with industrial activities in storm water discharges and authorized non-storm water discharges. BMPs may include a variety of pollution prevention measures or other low-cost pollution control measures. They are generally categorized as non-structural BMPs (activity schedules, prohibitions of practices, maintenance procedures, and other low-cost measures) and as structural BMPs (treatment measures, run-off controls, over-head coverage). To achieve these objectives, dischargers should consider the five-phase process for SWPPP development and implementation as shown in Table A (see page 9 of 10, below).

The SWPPP requirements are designed to be sufficiently flexible to meet the various needs of the facility. SWPPP requirements that are not applicable to the facility should not be included in the SWPPP.

A facility's SWPPP is a written document that shall contain a compliance activity schedule, a description of industrial activities and pollutant sources, descriptions of BMPs, drawings, maps, and relevant copies or references of parts of other plans. The SWPPP shall be revised whenever appropriate and shall be readily available for review by facility employees or Regional Board inspectors.

3. *Planning and Organization*

a. Pollution Prevention Team

The SWPPP shall identify a specific individual or individuals and their positions within the facility organization as members of a storm water pollution prevention team responsible for developing the SWPPP, assisting the facility manager in SWPPP implementation and revision, and conducting all monitoring program activities required in the stormwater monitoring program of Order No. 01-95. The SWPPP shall clearly identify the storm water pollution prevention related responsibilities, duties, and activities of each team member.

b. Review Other Requirements and Existing Facility Plans

The SWPPP may incorporate or reference the appropriate elements of other regulatory requirements. The discharger shall review all local, state, and federal requirements that impact, complement, or are consistent with the requirements of Order No. 01-95. The discharger shall identify any existing facility plans that contain storm water pollutant control measures or relate to the requirements of Order No. 01-95. As examples, dischargers whose facilities are subject to Federal Spill Prevention Control and Countermeasures' requirements should already have instituted a plan to control spills of certain hazardous materials. Similarly, the discharger whose facilities are subject to air quality related permits and regulations may already have evaluated industrial activities that generate dust or particulates.

4. *Site Map*

The SWPPP shall include a site map. The site map shall be provided on an 8-1/2 x 11 inch or larger sheet and include notes, legends, and other data as appropriate to ensure that the site map is clear and understandable. If necessary, the discharger may provide the required information on multiple site maps. The following information shall be included on the site map:

a. The facility boundaries; the outline of all storm water drainage areas within the facility boundaries; portions of the drainage area impacted by run-on from surrounding areas; and direction of flow of each drainage area, on-site surface water bodies, and areas of soil erosion. The map shall also identify nearby water bodies (such as rivers, lakes, ponds) and municipal storm drain inlets where the facility's storm water discharges and authorized non-storm water discharges may be received.

b. The location of the storm water collection and conveyance system, associated points of discharge, and direction of flow. Include any structural control measures that affect storm water discharges, authorized non-storm water discharges, and run-on. Examples of structural control measures are catch basins, berms, detention ponds, secondary containment, oil/water separators, diversion barriers, etc.

c. An outline of all impervious areas of the facility, including paved areas, buildings, covered storage areas, or other roofed structures.

d. Locations where materials are directly exposed to precipitation and the locations where significant spills or leaks identified in Section 6.a.(4)., below, have occurred.

e. Areas of industrial activity, which are potential pollutant sources. This shall include the locations of all waste treatment and disposal areas, cleaning and rinsing areas, shipping and receiving areas, storage areas and storage tanks, material handling and processing areas, vehicle and equipment storage/maintenance areas, fueling areas, or particulate/dust generating areas.

5. *List of Significant Materials*

The SWPPP shall include a list of significant materials handled and stored at the site. For each material on the list, describe the locations where the material is being stored, received, shipped, and handled, as well as the typical quantities and frequency. Materials shall include raw materials, intermediate products, final or finished products, recycled materials, and waste or disposed materials.

6. *Description of Potential Pollutant Sources*

a. The SWPPP shall include a narrative description of the treatment plant's activities, as identified in Section 4.e., above, associated potential pollutant sources, and potential pollutants that could be discharged in storm water discharges or authorized non-storm water discharges.

b. Significant Spills and Leaks
Describe materials that have spilled or leaked in significant quantities during construction and operation of the treatment plant.
The description shall include the type, characteristics, and approximate quantity of the material spilled or leaked, the cleanup or remedial actions that have occurred or are planned, the approximate remaining quantity of materials that may be exposed to storm water or non-storm water discharges, and the preventative measures taken to ensure spills or leaks do not reoccur. Such list shall be updated as appropriate during the term of Order No. 01-95.

c. Non-Storm Water Discharges
The discharger shall investigate the facility to identify all non-storm water discharges and their sources. All non-storm water discharges shall be described. This shall include the source, quantity, frequency, and characteristics of the non-storm water discharges.
Non-storm water discharges that contain significant quantities of pollutants and do not meet the conditions of Order No. 01-95 are prohibited (Examples of prohibited non-storm water discharges are contact and non-contact cooling water, rinse water, wash water, etc.). The SWPPP must include BMPs to prevent or reduce contact of non-storm water discharges with significant materials or equipment.

d. Soil Erosion
Describe the facility locations where soil erosion may occur as a result of storm water discharges or authorized non-storm water discharges.

e. The SWPPP shall include a summary of all areas of industrial activities, potential pollutant sources, and potential pollutants. This information should be summarized similar to Table B (see page 10 of 10, below). The last column of Table B, "Control Practices", should be completed in accordance with Section 8., below.

7. *Assessment of Potential Pollutant Sources*

a. The SWPPP shall include a narrative assessment of all industrial activities and potential pollutant sources as described in Section 6., above, to determine:

(1) Which areas of the facility are likely sources of pollutants in storm water discharges and authorized non-storm water discharges, and

(2) Which pollutants are likely to be present in storm water discharges and authorized non-storm water discharges. The discharger shall consider and evaluate various factors when performing this assessment such as current storm water BMPs; quantities of significant materials handled, produced, stored, or disposed of; likelihood of exposure to storm water or authorized non-storm water discharges; history of spill or leaks; and run-on from outside sources.

b. The discharger shall summarize the areas of the facility that are likely sources of pollutants and the corresponding pollutants that are likely to be present in storm water discharges and authorized non-storm water discharges.

The discharger is required to develop and implement additional BMPs as appropriate and necessary to prevent or reduce pollutants associated with each pollutant source. The BMPs will be narratively described in Section 8., below.

8. *Storm Water Best Management Practices*

The SWPPP shall include a narrative description of the storm water BMPs to be implemented at the facility for each potential pollutant and its source identified in the site assessment phase (Sections 6. and 7., above). The BMPs shall be developed and implemented to reduce or prevent pollutants in storm water discharges and authorized non-storm water discharges. Each pollutant and its source may require one or more BMPs. Some BMPs may be implemented for multiple pollutants and their sources, while other BMPs will be implemented for a very specific pollutant and its source.

The description of the BMPs shall identify the BMPs as (1) existing BMPs, (2) existing BMPs to be revised and implemented, or (3) new BMPs to be implemented. The description shall also include a discussion on the effectiveness of each BMP to reduce or prevent pollutants in storm water discharges and authorized non-storm water discharges. The SWPPP shall provide a summary of all BMPs implemented for each pollutant source. This information should be summarized similar to Table B.

The discharger shall consider the following BMPs for implementation at the facility:

a. Non-Structural BMPs: Non-structural BMPs generally consist of processes, prohibitions, procedures, schedule of activities, etc., that prevent pollutants associated with industrial activity from contacting with storm water discharges and authorized non-storm water discharges. They are considered low technology, cost-effective measures. The discharger should consider all possible non-structural BMPs options before considering additional structural BMPs (see Section 8.b., below). Below is a list of non-structural BMPs that should be considered:

(1) Good Housekeeping: Good housekeeping generally consist of practical procedures to maintain a clean and orderly facility.

(2) Preventive Maintenance: Preventive maintenance includes the regular inspection and maintenance of structural storm water controls (catch basins, oil/water separators, etc.) as well as other facility equipment and systems.

(3) Spill Response: This includes spill clean-up procedures and necessary clean-up equipment based upon the quantities and locations of significant materials that may spill or leak.

(4) Material Handling and Storage: This includes all procedures to minimize the potential for spills and leaks and to minimize exposure of significant materials to storm water and authorized non-storm water discharges.

(5) Employee Training: This includes training of personnel who are responsible for (a) implementing activities identified in the SWPPP, (b) conducting inspections, sampling, and visual observations, and (c) managing storm water. Training should address topics such as spill response, good housekeeping, and material handling procedures, and actions necessary to implement all BMPs identified in the SWPPP. The SWPPP shall identify periodic dates for such training. Records shall be maintained of all training sessions held.

(6) Waste Handling/Recycling: This includes the procedures or processes to handle, store, or dispose of waste materials or recyclable materials.

(7) Record Keeping and Internal Reporting: This includes the procedures to ensure that all records of inspections, spills, maintenance activities, corrective actions, visual observations, etc., are developed, retained, and provided, as necessary, to the appropriate facility personnel.

(8) Erosion Control and Site Stabilization: This includes a description of all sediment and erosion control activities. This may include the planting and maintenance of vegetation, diversion of run-on and runoff, placement of sandbags, silt screens, or other sediment control devices, etc.

(9) Inspections: This includes, in addition to the preventative maintenance inspections identified above, an inspection schedule of all potential pollutant sources. Tracking and follow-up procedures shall be described to ensure adequate corrective actions are taken and SWPPPs are made.

(10) Quality Assurance: This includes the procedures to ensure that all elements of the SWPPP and Monitoring Program are adequately conducted.

b. Structural BMPs: Where non-structural BMPs as identified in Section 8.a., above, are not effective, structural BMPs shall be considered. Structural BMPs generally consist of structural devices that reduce or prevent pollutants in storm water discharges and authorized non-storm water discharges. Below is a list of structural BMPs that should be considered:

(1) Overhead Coverage: This includes structures that provide horizontal coverage of materials, chemicals, and pollutant sources from contact with storm water and authorized non-storm water discharges.

(2) Retention Ponds: This includes basins, ponds, surface impoundments, bermed areas, etc., that do not allow storm water to discharge from the facility.

(3) Control Devices: This includes berms or other devices that channel or route run-on and runoff away from pollutant sources.

(4) Secondary Containment Structures: This generally includes containment structures around storage tanks and other areas for the purpose of collecting any leaks or spills.

(5) Treatment: This includes inlet controls, infiltration devices, oil/water separators, detention ponds, vegetative swales, etc., that reduce the pollutants in storm water discharges and authorized non-storm water discharges.

9. *Annual Comprehensive Site Compliance Evaluation*

The discharger shall conduct one comprehensive site compliance evaluation in each reporting period (July 1-June 30). Evaluations shall be conducted within 8-16 months of each other. The SWPPP shall be revised, as appropriate, and the revisions implemented within 90 days of the evaluation. Evaluations shall include the following:

a. A review of all visual observation records, inspection records, and sampling and analysis results.

b. A visual inspection of all potential pollutant sources for evidence of, or the potential for, pollutants entering the drainage system.

c. A review and evaluation of all BMPs (both structural and non-structural) to determine whether the BMPs are adequate, properly implemented and maintained, or whether additional BMPs are needed. A visual inspection of equipment needed to implement the SWPPP, such as spill response equipment, shall be included.

d. An evaluation report that includes, (1) identification of personnel performing the evaluation, (2) the date(s) of the evaluation, (3) necessary SWPPP revisions, (4) schedule, as required in Section 10.e, below, for implementing SWPPP revisions, (5) any incidents of non-compliance and the corrective actions taken, and (6) a certification that the discharger is in compliance with Order No. 01-2. If the above certification cannot be provided, explain in the evaluation report why the discharger is not in compliance with this order. The evaluation report shall be submitted as part of the annual report, retained for at least five years, and signed and certified in accordance with Section A.18. "Monitoring and Reporting Requirements" of Monitoring and Reporting Program No. 01-95.

10. *SWPPP General Requirements*

a. The SWPPP shall be retained on site and made available upon request by a representative of the Regional Board and/or local storm water management agency (local agency) which receives the storm water discharges.

b. The Regional Board and/or local agency may notify the discharger when the SWPPP does not meet one or more of the minimum requirements of this section. As requested by the Regional Board and/or local agency, the discharger shall submit a SWPPP revision and implementation schedule that meets the minimum requirements of this section to the Regional Board and/or local agency that requested the SWPPP revisions. Within 14 days after implementing the required SWPPP revisions, the discharger shall provide written certification to the Regional Board and/or local agency that the revisions have been implemented.

c. The SWPPP shall be revised, as appropriate, and implemented prior to changes in industrial activities which (1) may significantly increase the quantities of pollutants in storm water discharge, (2) cause a new area of industrial activity at the facility to be exposed to storm water, or (3) begin an industrial activity which would introduce a new pollutant source at the facility.

d. The SWPPP shall be revised and implemented in a timely manner, but in no case more than 90 days after a discharger determines that the SWPPP is in violation of any requirement(s) of Order No. 01-95.

e. When any part of the SWPPP is infeasible to implement by the deadlines specified in Order No. 01-95, due to proposed significant structural changes, the discharger shall submit a report to the Regional Board prior to the applicable deadline that (1) describes the portion of the SWPPP that is infeasible to implement by the deadline, (2) provides justification for a time extension, (3) provides a schedule for completing and implementing that portion of the SWPPP, and (4) describes the BMPs that will be implemented in the interim period to reduce or prevent pollutants in storm water discharges and authorized non-storm water discharges. Such reports are subject to Regional Board approval and/or modifications. The discharger shall provide written notification to the Regional Board within 14 days after the SWPPP revisions are implemented.

f. The SWPPP shall be provided, upon request, to the Regional Board. The SWPPP is considered a report that shall be available to the public by the Regional Board under Section 308(b) of the Clean Water Act.

TABLE A

FIVE PHASES FOR DEVELOPING AND IMPLEMENTING INDUSTRIAL STORM WATER POLLUTION PREVENTION PLANS

PLANNING AND ORGANIZATION

*Form pollution prevention team
*Review other plans

↓

ASSESSMENT PHASE

*Develop a site map
*Identify potential pollutant sources
*Inventory of materials and chemicals
*List significant spills and leaks
*Identify non-storm water discharges
*Assess pollutant risks

↓

BEST MANAGEMENT PRACTICES IDENTIFICATION PHASE

*Non-structural BMPs
*Structural BMPs
*Select activity and site-specific BMPs

↓

IMPLEMENTATION PHASE

*Train employees
*Implement BMPs
*Conduct record keeping and reporting

↓

EVALUATION / MONITORING

*Conduct annual site evaluation
*Review monitoring information
*Evaluate BMPs
*Review and revise SWPPP

TABLE B

EXAMPLE

ASSESSMENT OF POTENTIAL POLLUTION SOURCES AND CORRESPONDING BEST MANAGEMENT PRACTICES SUMMARY

AREA	ACTIVITY	POLLUTANT SOURCE	POLLUTANT	BEST MANAGEMENT PRACTICES
Vehicle & equipment fueling	Fueling	Spills and leaks during delivery	Fuel oil	- Use spill and overflow protection - Minimize run-on of storm water into the fueling area - Cover fueling area - Use dry cleanup methods rather than hosing down area - Implement proper spill prevention control program - Implement adequate preventative maintenance program to prevent tank and line leaks - Inspect fueling areas regularly to detect problems before they occur - Train employees on proper fueling, cleanup, and spill response techniques.
		Spills caused by topping off fuel oil	Fuel oil	
		Hosing or washing down fuel area	Fuel oil	
		Leaking storage tanks	Fuel oil	
		Rainfall running off fueling areas, and rainfall running onto and off fueling area	Fuel oil	

California Regional Water Quality Control Board
Santa Ana Region

Monitoring and Reporting Program (M&RP) No. 01-95
NPDES NO. CA 8000326

for
Irvine Ranch Water District
Michelson Water Reclamation Plant
Irvine, Orange County

A. MONITORING AND REPORTING REQUIREMENTS:

1. All sampling and sample preservation shall be in accordance with the current edition of *"Standard Methods for the Examination of Water and Wastewater"* (American Public Health Association).

2. All laboratory analyses shall be performed in accordance with test procedures under 40 CFR 136 (latest edition) *"Guidelines Establishing Test Procedures for the Analysis of Pollutants,"* promulgated by the United States Environmental Protection Agency (EPA), unless otherwise specified in this monitoring and reporting program (M&RP). In addition, the Regional Board and/or EPA, at their discretion, may specify test methods which are more sensitive than those specified in 40 CFR 136. Laboratory analysis for biosolids shall be in accordance with 40 CFR 503.8.

3. Chemical, bacteriological, and bioassay analyses shall be conducted at a laboratory certified for such analyses by the State Department of Health Services or EPA or at laboratories approved by the Regional Board's Executive Officer.

4. In conformance with federal regulations 40 CFR 122.45(c), analyses to determine compliance with the effluent limitations for metals shall be conducted using the total recoverable method. For Chromium (VI), the dissolved method in conformance with 40 CFR 136 may be used to measure compliance with the Chromium (VI) limitation.

5. For effluent and ambient receiving water monitoring:

    a. Until June 1, 2002, the discharger shall require its testing laboratory analyzing priority pollutants to quantify each constituent at least down to the Practical Quantitation Levels[1] specified in Attachment "A". Any internal quality control data associated with the sample must be reported when requested by the Executive Officer. The Regional Board will reject the quantified laboratory data if quality control data is unavailable or unacceptable.

---

[1] *PQL is the lowest concentration of a substance which can be determined within ± 20 percent of the true concentration by 75 percent of the analytical laboratories tested in a performance evaluation study. Alternatively, if performance data are not available, the PQL is the method detection limit (MDL) x 5 for carcinogens and MDL x 10 for noncarcinogens.*

b. By June 1, 2002, the discharger shall require its testing laboratory to calibrate the analytical system down to the minimum levels (MLs)[2] specified in Attachment "B" for priority pollutants with effluent limitations in this Order, unless an alternative minimum level is approved by the Regional Board's Executive Officer. The June 1, 2002 date may be extended by the Executive Officer provided that good cause is demonstrated by the discharger and provided that any such extension is as short as possible. Any internal quality control data associated with the sample must be reported when requested by the Executive Officer. The Regional Board will reject the quantified laboratory data if quality control data is unavailable or unacceptable.

c. For receiving water monitoring and for those priority pollutants without effluent limitations, the discharger shall require its testing laboratory to quantify constituent concentrations to the lowest achievable MDL as determined by the procedure found in 40 CFR 136 (revised as of May 14, 1999). In situations where the most stringent applicable receiving water objective (freshwater or human health (consumption of organisms only), as specified for that pollutant in 40 CFR 131.38[3]) is below the minimum level value specified in Attachment "B" and the discharger cannot achieve an MDL value for that pollutant below the ML value, the discharger shall submit justification why a lower MDL value cannot be achieved. Justification shall be submitted together with monthly monitoring reports.

d. The discharger shall report the results of analytical determinations for the presence of chemical constituents in a sample using the following reporting protocols:

1) For monitoring data submitted through June 1, 2002:

(a) Sample results greater than or equal to the PQL shall be reported as measured by the laboratory (i.e., the measured chemical concentration in the sample).

(b) Sample results less than the PQL, but greater than or equal to the laboratory's MDL, shall be reported as "Detected, but Not Quantified," or "DNQ." The estimated chemical concentration of the sample shall also be reported.

---

2 *Minimum level is the concentration at which the entire analytical system must give a recognizable signal and acceptable point. The ML is the concentration in a sample that is equivalent to the concentration of the lowest calibration standard analyzed by a specific analytical procedure, assuming that all the method specified sample weights, volumes, and processing steps have been followed.*

3 *See Federal Register/ Vol. 65, No. 97 / Thursday, May 18, 2000 / Rules and Regulations.*

(c) Sample results not detected above the laboratory's MDL shall be reported as "not detected" or "ND."

2) For monitoring data submitted after June 1, 2002[4]:

(a) Sample results greater than or equal to the reported ML shall be reported as measured by the laboratory (i.e., the measured chemical concentration in the sample).

(b) Sample results less than the reported ML, but greater than or equal to the laboratory's MDL, shall be reported as "Detected, but Not Quantified," or "DNQ." The estimated chemical concentration of the sample shall also be reported.

(c) Sample results not detected above the laboratory's MDL shall be reported as "not detected" or "ND."

e. The discharger shall submit to the Regional Board reports necessary to determine compliance with effluent limitations for priority pollutants in this Order and shall follow the chemical nomenclature and sequential order of constituents shown in Attachment "C" – Priority Pollutant Lists. The discharger shall report with each sample result:

1) The PQL or ML achieved by the testing laboratory; and

2) The laboratory's current Method Detection Limit (MDL)[5], as determined by the procedure found in 40 CFR 136 (revised as of May 14, 1999).

6. For non-priority pollutants monitoring, all analytical data shall be reported with identification of practical quantitation levels and with method detection limits, as determined by the procedure found in 40 CFR 136 (revised as of May 14, 1999).

7. The discharger shall have, and implement an acceptable written quality assurance (QA) plan for laboratory analyses. Duplicate chemical analyses must be conducted on a minimum of ten percent (10%) of the samples, or at least one sample per month, whichever is greater. A similar frequency shall be maintained for analyzing spiked samples. When requested by the Regional Board or EPA, the discharger will participate in the NPDES discharge monitoring report QA performance study.

---

4 *If an extension from this date is authorized by the Executive Officer for one or more constituents, then the requirements specified in paragraph A.5.d.1) above, shall apply to that constituent(s) until the extended date specified by the Executive Officer. After that date, the requirements specified in paragraph A.5.d.2) shall apply.*

5 *MDL is the minimum concentration of a substance that can be measured and reported with 99 percent confidence that the analyte concentration is greater than zero, as defined in 40 CFR 136, Appendix B, revised as of May 14, 1999.*

8. Discharge monitoring data shall be submitted in a format acceptable by the Regional Board and EPA. Specific reporting format may include preprinted forms and/or electronic media. The results of all monitoring required by this Order shall be reported to the Regional Board, and shall be submitted in such a format as to allow direct comparison with the limitations and requirements of this Order. The hard copy of submitted reports shall serve as the official submittal.

9. The discharger shall tabulate the monitoring data to clearly illustrate compliance and/or noncompliance with the requirements of the Order.

10. The discharger shall multiply each measured or estimated congener concentration by its respective toxic equivalency factor (TEF) as shown below and report the sum of these values. The discharger shall use the U.S. EPA approved test method 1613 for dioxins and furans.

Toxic Equivalency Factors for 2,3,7, 8-TCDD Equivalents	
Congener	TEF
2,3,7,8-TetraCDD	1
1,2,3,7,8-PentaCDD	1.0
1,2,3,4,7,8-HexaCDD	0.1
1,2,3,6,7,8-HexaCDD	0.1
1,2,3,7,8,9-HexaCDD	0.1
1,2,3,4,6,7,8-HeptaCDD	0.01
OctaCDD	0.0001
2,3,7,8-TetraCDF	0.1
1,2,3,7,8-PentaCDF	0.05
2,3,4,7,8-PentaCDF	0.5
1,2,3,4,7,8-HexaCDF	0.1
1,2,3,6,7,8-HexaCDF	0.1
1,2,3,7,8,9-HexaCDF	0.1
2,3,4,6,7,8-HexaCDF	0.1
1,2,3,4,6,7,8-HeptaCDF	0.01
1,2,3,4,7,8,9-HeptaCDF	0.01
OctaCDF	0.0001

11. For every item of monitoring data where the requirements are not met, the monitoring report shall include a statement discussing the reasons for noncompliance, and of the actions undertaken or proposed which will bring the discharge into full compliance with requirements at the earliest time, and an estimate of the date when the discharger will be in compliance. The discharger shall notify the Regional Board by letter when compliance with the time schedule has been achieved.

12. The monthly reports for June and December shall include a roster of plant personnel, including job titles, duties, and level of State certification for each individual.

13. By March 1 of each year, the discharger shall submit an annual report for Michelson Water Reclamation Plant to the Regional Board. The report shall contain both tabular and graphical summaries of the monitoring data obtained during the previous year. In addition, the discharger shall discuss the compliance record and the corrective actions taken or planned which may be needed to bring the discharge into full compliance with the waste discharge requirements. The annual report shall include a summary of the quality assurance (QA) activities for the previous year.

14. The discharger shall assure that records of all monitoring information are maintained and accessible for a period of at least five years from the date of the sample, report, or application. This period of retention shall be extended during the course of any unresolved litigation regarding this discharge or by the request of the Regional Board at any time. Records of monitoring information shall include:

    a. The date, exact place, and time of sampling or measurements;
    b. The individual(s) who performed the sampling, and/or measurements;
    c. The date(s) analyses were performed;
    d. The laboratory which performed the analyses,
    e. The individual(s) who performed the analyses;
    f. The analytical techniques or methods used;
    g. All sampling and analytical results;
    h. All monitoring equipment calibration and maintenance records;
    i. All original strip charts from continuous monitoring devices;
    j. All data used to complete the application for this Order;
    k. Copies of all reports required by this Order; and.
    l. Electronic data. and information generated by the Supervisory Control And Data Acquisition (SCADA) System.

15. The flow measurement system shall be calibrated at least once per year or more frequently, to ensure continued accuracy.

16. All monitoring instruments and devices used by the discharger to fulfill the prescribed monitoring program shall be properly maintained and calibrated as necessary to ensure their continued accuracy. In the event that continuous monitoring equipment is out of service for greater than a 24-hour period, the discharger shall obtain at least a representative grab sample each day the equipment is out of service. The discharger shall correct the cause(s) of failure of the continuous monitoring equipment as soon as practicable. In its monitoring report, the discharger shall specify the period(s) during which the equipment was out of service and if the problem has not been corrected, shall identify the steps which the discharger is taking or proposes to take to bring the equipment back into service and the schedule for these actions.

17. Monitoring and reporting shall be in accordance with the following:

    a. Samples and measurements taken for the purpose of monitoring shall be representative of the monitored activity.

    b. The monitoring and reporting of influent, effluent, and sludge shall be done, at a minimum, on an annual basis, and more frequently, depending on the nature and effect of the sewage sludge use or disposal practice, or as specified in this Order.

    c. All monitoring, including that of sludge use or disposal, must be conducted according to test procedures approved under 40 CFR 136 or as specified in this Order.

    d. The results of any analysis of samples taken more frequently than required at the locations specified in this M&RP shall be reported to the Regional Board.

    e. A "grab" sample is defined as any individual sample collected in less than 15 minutes.

    f. A composite sample is defined as a combination of no fewer than eight individual grab samples obtained over the specified sampling period. The volume of each individual grab sample shall be proportional to the discharge flow rate at the time of sampling or, the number of equal volume samples shall be proportional to the flow over the sampling period. The composting period shall equal the specific sampling period, or 24 hours, if no period is specified.

    g. Daily samples shall be collected on each day of the week.

    h. Weekly samples shall be collected any representative day of each week.

    i. Monthly samples shall be collected on any representative day of each month.

    j. Quarterly samples shall be collected in January, April, July, and October.

    k. Semi-annual samples shall be collected in January and July.

l. Annual samples shall be collected in accordance with the following schedule:

Year	Annual samples
2002	July
2003	October
2004	January
2005	April
2006	July

18. All reports shall be signed by either a principal executive officer or ranking elected or appointed official or a duly authorized representative of a principal executive officer or ranking elected or appointed official. A duly authorized representative of a principal executive officer or ranking elected or appointed official may sign the reports only if;

    a. The authorization is made in writing by a principal executive officer or ranking elected or appointed official,

    b. The authorization specifies either an individual or a position having responsibility for the overall operation of the regulated facility or activity, such as the position of plant manager, superintendent, or position of equivalent responsibility. (A duly authorized representative may thus be either a named individual or any individual occupying a named position), and

    c. The written authorization is submitted to the Regional Board.

    Each person signing a report required by this Order or other information requested by the Regional Board shall make the following certification:

    " I certify under penalty of law that this document and all attachments were prepared under my direction or supervision in accordance with a system designed to assure that qualified personnel properly gather and evaluate the information submitted. Based on my inquiry of the person or persons who manage the system, or those persons directly responsible for gathering the information, the information submitted is, to the best of my knowledge and belief, true, accurate[6]*, and complete. I am aware that there are significant penalties for submitting false information, including the possibility of fine and imprisonment for knowing violations."*

---

6 *For the purposes of this certification the term "accurate" refers to the veracity of the information submittal and not to the performance characteristics of the measurement system.*

19. The discharger, unless otherwise specified elsewhere in this M&RP, shall deliver a copy of each monitoring report in the appropriate format to:

    a. California Regional Water Quality Control Board
    Santa Ana Region
    3737 Main Street, Suite 500
    Riverside, CA 92501-3348, and

    b. NPDES/DMR
    CWA Compliance Office, WTR-7
    Water Division
    75 Hawthorne Street
    San Francisco, CA 94105

B. INFLUENT MONITORING:

1. Sampling stations shall be established and located upstream of any in-plant return flows and where a representative sample of the influents to the treatment facility can be obtained. The date and time of sampling (as appropriate) shall be reported with the analytical values determined.

2. The following shall constitute the influent monitoring program:

Constituent	Units	Type of Sample	Minimum Frequency of Sampling & Analysis
Flow	mgd[7]	Recorder/Totalizer	Continuous
Specific Conductance	µmhos/cm	Recorder	"
pH	pH units	Recorder	Continuous
BOD	mg/l[8]	Composite	Daily
COD	"	"	"
Suspended Solids	"	Composite	"
Total Dissolved Solids	"	Composite	Monthly
Ammonia-Nitrogen	"	Grab	"
Total Inorganic Nitrogen	"	Composite	"
Total Kjeldahl Nitrogen	mg/l	"	"
Bis(2-ethyhexyl)phthalate	µg/l[9]	Grab	"
Dibromochloromethane	"	"	Quarterly
Dichlorobromomethane	"	"	"
Methyl Chloride	"	"	"
Methylene Chloride	"	"	"

[7] *Mgd = Million gallons per day.*

[8] *mg/l = milligrams per liter*

[9] *µg/l = micrograms per liter*

Constituent	Units	Type of Sample	Minimum Frequency of Sampling & Analysis
Tetrachloroethylene	µg/l	Grab	Quarterly
PAHs[10]	µg/l	Grab	Quarterly
Total Trihalomethanes[11]	"	"	"
Arsenic	µg/l	Composite	Quarterly
Cadmium	"	"	"
Total Chromium	"	"	"
Copper	"	"	"
Lead	"	"	"
Mercury	"	"	"
Nickel	"	"	"
Silver	"	"	"
Zinc	µg/l	Composite	Quarterly
Volatile organic portion of remaining EPA Priority Pollutants[12] (See Attachment "C")	µg/l	Grab	Annually
Remaining EPA Priority Pollutants[13] (See Attachment "C")	µg/l	Composite	Annually

10 *Sum of acenaphthylene, anthracene, 1,2-benzanthracene, 3,4-benzofluoranthene, dibenzo (ah) anthracene, flourene, indeno (1,2,3,-cd) pyrene, phenantrene, and pyrene.*

11 *Sum of bromodichloromethane, dibromochlormethane, bromoform and chloroform.*

12 *EPA priority pollutants are those remaining volatile organic pollutants listed in Attachment "C" which are not specifically listed in this monitoring program table.*

13 *Remaining EPA priority pollutants are those pollutants listed in Attachment "C" which are not volatile organics and pollutants not specifically listed in this monitoring program table.*

C. EFFLUENT MONITORING:

1. Sampling station(s) shall be established at the point(s) of discharge and shall be located where representative samples of the effluent can be obtained.

2. The following shall constitute the recycled water monitoring program:

Constituent	Units	Type of Sample	Minimum Frequency of Analysis
Flow	mgd	Recorder/Totalizer	Continuous
Specific Conductance	µmhos/cm	Recorder	"
pH	pH units	"	"
Turbidity	NTU[14]	"	"
Total Residual Chlorine	mg/l	Recorder	Continuous
Total Suspended Solids	mg/l	Composite	Daily
BOD	"	"	"
COD	mg/l	Composite	"
Coliform Organisms	MPN per 100 ml[15]	Grab	Daily
CT (contact time) Value	Mg-min/L[16]	Calculation	Daily (see note (3), below)
Temperature	^{0}C	Grab	Weekly
Ammonia-Nitrogen	mg/l	"	Monthly
Bicarbonate	mg/l	Composite	Monthly
Boron	"	"	"
Calcium	"	"	"
Carbonate	"	"	"

14 *NTU = Nephelometric Turbidity Units*

15 *MPN/100ml = Most Probable Number per 100 milliliters*

16 *mg-min/L = milligram-minutes per liter*

Constituent	Units	Type of Sample	Minimum Frequency of Analysis
Chloride	mg/l	Composite	Monthly
Fluoride	"	"	"
Nitrate	"	"	"
Sodium	"	"	"
Sulfate	"	"	"
Total Inorganic Nitrogen	"	"	"
Total Kjeldalh Nitrogen	"	"	"
Total Nitrogen	"	"	"
Total Organic Carbon (TOC)	"	"	"
Total Dissolved Solids	"	"	"
Total Hardness	"	"	"
Total Phosphorous	mg/l	"	Monthly
Bis(2-Ethyhexyl)phthalate	µg/l	Grab	Monthly
Antimony	µg/l	Composite	Quarterly
Arsenic	"	"	"
Cadmium	"	"	"
Chromium (VI) or Total Chromium	"	"	"
Copper	"	"	"
Lead	"	"	"
Mercury	"	"	"
Nickel	"	"	"
Selenium	"	"	"
Silver	"	"	"
Zinc	"	"	"

Constituent	Units	Type of Sample	Minimum Frequency of Analysis
Barium	mg/l	Composite	Quarterly
Cobalt	mg/l	Composite	Quarterly
Iron	"	"	"
Manganese	"	"	"
Bromoform	µg/l	Grab	Quarterly
Chlorodibromomethane	"	"	"
Chloroform	"	"	"
Dichlorobromomethane	"	"	"
Methyl Chloride	"	"	"
Methylene Chloride	"	"	"
Tetrachloroethylene	"	"	"
Acenaphthylene	"	"	"
Anthracene	"	"	"
Benzo (a) anthracene	"	"	"
Benzo (b) Fluorantene	"	"	"
Dibenzo (ah) anthracene	"	"	"
Flourene	"	"	"
Indeno (1,2,3-cd) pyrene	"	"	"
N-Nitrosodimethylamine	"	"	"
Phenantrene	"	"	"
Pyrene	µg/l	Grab	"
2,3,7,8-TetraCDD	ρg/l (parts-per-quadrillion)	Composite	Semi-annual (see A.10 & A.17.j.)
1,2,3,7,8-PentaCDD	"	"	"

Constituent	Units	Type of Sample	Minimum Frequency of Analysis
1,2,3,4,7,8-HexaCDD	"	"	"
1,2,3,6,7,8-HexaCDD	"	"	"
1,2,3,7,8,9-HexaCDD	ρg/l (parts-per-quadrillion)	Composite	Semi-annual (see A.10 & A.17.j.)
1,2,3,4,6,7,8-HeptaCDD	"	"	"
OctaCDD	"	"	"
2,3,7,8-TetraCDF	"	"	"
1,2,3,7,8-PentaCDF	"	"	"
2,3,4,7,8-PentaCDF	"	"	"
1,2,3,4,7,8-HexaCDF	"	"	"
1,2,3,6,7,8-HexaCDF	"	"	"
1,2,3,7,8,9-HexaCDF	"	"	"
2,3,4,6,7,8-HexaCDF	"	"	"
1,2,3,4,6,7,8-HeptaCDF	"	"	"
1,2,3,4,7,8,9-HeptaCDF	"	"	"
OctaCDF	"	"	"
Volatile organic portion of EPA Priority Pollutants (See Attachment "C")	µg/l	Grab	Semi -annually
Remaining EPA Priority Pollutants (See Attachment "C")	µg/l	Composite	Semi-annually
Toxicity	TUc	Composite	See Section E., below

Notes:

(1) Samples for total coliform bacteria shall be collected at least daily. Samples shall be taken from the disinfected effluent.

(2) Turbidity analysis shall be continuous, performed by a continuous recording turbidimeter. Compliance with the daily average operating filter effluent turbidity shall be determined by averaging the levels of recorded turbidity taken at a minimum of four-hour intervals over a 24-hour period. The results of the daily average turbidity determinations shall be reported monthly.

(3) Compliance with CT requirements shall be determined daily based on low chlorine residual and/or peak flow.

3. The monitoring frequency for those priority pollutants that are detected during the required quarterly monitoring at a concentration greater than fifty percent of the most stringent applicable receiving water objective (freshwater or human health (consumption of organisms only) specified for that pollutant[17] in 40 CFR 131.38[18]) shall be accelerated to monthly. To return to the monitoring frequency specified, the discharger shall request and receive approval from the Regional Board's Executive Officer or designee.

4. The monitoring frequency for those priority pollutants that are detected during the required quarterly or semi-annual monitoring shall be accelerated to monthly for one year following detection. To return to the monitoring frequency specified, the discharger shall request and receive approval from the Regional Board's Executive Officer or designee.

5. The following shall constitute the monitoring program for the dewatering waste discharges at Discharge Serial No. 001.

Constituent	Unit	Type of Sample	Frequency of Analysis
Flow	mgd	Estimate	Daily
Suspended Solids	mg/l	Grab	Monthly
Total Sulfides	"	"	"
Oil & Grease	"	"	"
Total Nitrogen (as N)	"	"	"
Total Phosphorous (as P)	"	"	"

17 *For those priority pollutants without specified criteria values, accelerated monitoring is not required.*

18 *See Federal Register/ Vol. 65, No. 97 / Thursday, May 18, 2000 / Rules and Regulations.*

D. RECEIVING WATER MONITORING:

1. The following shall constitute receiving water monitoring at Sand Canyon Reservoir and Rattlesnake Reservoir:

Constituent	Units	Type of Sample	Minimum Frequency of Analysis
Total Chlorine Residual	mg/l	grab	Weekly
Temperature	^{0}C	Grab	"
Ammonia-Nitrogen	mg/l	"	"
Total Inorganic Nitrogen	"	"	"
Total Kjeldalh Nitrogen	"	"	"
Total Nitrogen	"	"	"
2,3,7,8-TetraCDD	ρg/l (parts-per-quadrillion)	Composite	Semi-annual (see A.10 & A.17.j.)
1,2,3,7,8-PentaCDD	"	"	"
1,2,3,4,7,8-HexaCDD	"	"	"
1,2,3,6,7,8-HexaCDD	"	"	"
1,2,3,7,8,9-HexaCDD	ρg/l (parts-per-quadrillion)	Composite	Semi-annual (see A.10 & A.17.j.)
1,2,3,4,6,7,8-HeptaCDD	"	"	"
OctaCDD	"	"	"
2,3,7,8-TetraCDF	"	"	"
1,2,3,7,8-PentaCDF	"	"	"
2,3,4,7,8-PentaCDF	"	"	"
1,2,3,4,7,8-HexaCDF	"	"	"
1,2,3,6,7,8-HexaCDF	"	"	"
1,2,3,7,8,9-HexaCDF	"	"	"

Constituent	Units	Type of Sample	Minimum Frequency of Analysis
2,3,4,6,7,8-HexaCDF	"	"	"
1,2,3,4,6,7,8-HeptaCDF	"	"	"
1,2,3,4,7,8,9-HeptaCDF	"	"	"
OctaCDF	"	"	"
Volatile organic portion of EPA Priority Pollutants (See Attachment "C")	µg/l	Grab	Semi -annually
Remaining EPA Priority Pollutants (See Attachment "C")	µg/l	Composite	Semi-annually

2. During the winter months, from October 1 through March 1 of each year, the following shall also be monitored at Sand Canyon Reservoir:

   a. Recycled water discharges into the reservoir shall be estimated and recorded on a permanent log daily.

   b. Overflow discharges from the reservoir to Sand Canyon Wash shall be estimated and recorded on a permanent log daily.

   c. The date and duration of storm events which has occurred and contributed stormwater into the reservoir shall be noted and recorded on a permanent log daily.

   d. Every Tuesday and Friday, the surface water elevation shall be determined and recorded on a permanent log.

E. TOXICITY MONITORING REQUIREMENTS:

1. The discharger shall conduct critical life stage chronic toxicity testing in accordance with *Method 1002.0 - Survival and Reproduction test for water flea, Ceriodaphnia dubia* as specified in "*Short-term Methods for Estimating the Chronic Toxicity of Effluents and Receiving Waters to Freshwater Organisms*", third edition, Environmental Monitoring Systems Laboratory, U.S. Environmental Protection Agency 1994, Cincinnati, Ohio (July 1994, EPA/600/4-91/002).

2. The discharger shall establish procedures to ensure that the toxicity testing laboratory notifies the discharger of the results of toxicity testing within twenty-four hours of completing such tests.

3. A minimum of one monthly chronic toxicity test shall be conducted on 24-hour composite samples.

4. The discharger shall increase the frequency of chronic toxicity testing to every two weeks whenever any test result exceeds 1.0 TUc. The first test under the accelerated schedule shall be conducted within two weeks of receiving notice of the test which exceeds 1.0 TUc, and every two weeks thereafter. The discharger may resume the regular test schedule when two consecutive chronic toxicity tests result in 1.0 TUc, or when the results of the Initial Investigation Reduction Evaluation conducted by the discharger have adequately addressed the identified toxicity problem .

5. The presence of chronic toxicity shall be estimated as specified in Short-Term Methods for Estimating the Chronic Toxicity of Effluents and Receiving Waters to Freshwater Organisms. Third Edition. EPA/600/4-91/002.

6. Results for both survival and reproduction endpoints shall be reported in TUc, where TUc = 100/NOEC or 100/ICp or ECp (p is the percent effluent). The no observed effect concentration (NOEC) is the highest concentration of toxicant to which organisms are exposed in a chronic test, that causes no observable adverse effect on the tests organisms (e.g., the highest concentration of toxicant to which the values for the observed responses are not statistically significant different from the controls). The inhibition concentration (IC) is a point estimate of the toxicant concentration that causes a given percent reduction in a non-quantal biological measurement (e.g., reproduction or growth) calculated from a continuous model (the EPA Interpolation Method). The effective concentration (EC) is a point estimate of the toxicant concentration that would cause a given percent reduction in quantal biological measurement (e.g., larval development, survival) calculated from a continuous model (e.g., probit).

7. Additional Testing Requirements.

   a. A series of at least five dilutions and a control will be tested. The series shall be within 60% to 100% effluent concentration.

   b. If organisms are not cultured in-house, concurrent testing with reference toxicants shall be conducted. Where organisms are cultured in-house, monthly reference toxicant testing is sufficient. Reference toxicants shall also be conducted using the same test conditions as the effluent toxicity test (e.g., same test duration, etc).

   c. If either of the reference toxicant test or the effluent tests do not meet all test acceptability criteria as specified in the manual[19], then the discharger must re-sample and re-test within 14 days or as soon as the discharger receives notification of failed tests.

---

19 *Refers to USEPA Manual "Short-Term Methods for Estimating the Chronic Toxicity of Effluents and Receiving Waters to Freshwater Organisms. Third Edition. EPA/600/4-91/002."*

d. Control and dilution water should be receiving water or lab water, as appropriate, as described in the manual. If the dilution water used is different from the culture water, a second control, using culture water shall also be used.

8. Quality Assurance/Control:

a. A quality assurance/quality control (QA/QC) program shall be instituted to verify the results of the effluent toxicity monitoring program. The QA/QC program shall include but shall not be limited to the following: (1) Selection of an independent testing laboratory; (2) Approval by the Regional Board's Executive Officer or Executive Officer's designee of the independent testing laboratory; (3) Once during the year, the discharger shall split samples with the independent laboratory for conducting acute and chronic toxicity testing; (4) Results from the independent laboratory shall be submitted to the Regional Board and the discharger for evaluation; (5) The discharger shall review the test acceptability criteria in accordance with the EPA test protocols, EPA/600/4-91/002.

b. Results from the independent laboratory of the annual QA/QC split samples are to be used for Quality Assurance/Quality Control (QA/QC) purposes only and not for purposes of determining compliance with other requirements of this Order.

9. The use of alternative methods for measuring chronic toxicity may be considered by the Executive Officer on a case–by-case basis. The use of a different test species, in lieu of conducting the required test species may be considered/approved by the Executive Officer on a case-by case basis upon submittal of the documentation supporting discharger's determination that a different species is more sensitive and appropriate.

10. Reporting: Results of all toxicity testing conducted within the month following the reporting period shall be submitted monthly in accordance with "Short-term Methods for Estimating the Chronic Toxicity of Effluents and Receiving Waters to Freshwater Organisms", third edition, Environmental Monitoring Systems Laboratory, U.S. Environmental Protection Agency 1994, Cincinnati, Ohio (July 1994, EPA/600/4-91/002). The report shall include a determination of the median value of all chronic toxicity testing results conducted during the two previous months.

11. Whenever an Initial Investigation Reduction Evaluation is conducted, the results of the evaluation shall be submitted upon completion. In addition, monthly status reports shall be submitted as part of the discharger's monitoring report for the previous month.

F. SOLIDS MONITORING:

1. The discharger shall maintain a permanent log of all the solids hauled away from the treatment facility for use/disposal elsewhere and shall provide a monthly summary of the volume, type (screenings, raw sludge), use (for further treatment at OCSD, composting, etc), and the destination.

G. WATER SUPPLY MONITORING:

1. In August of each year, a sample of each source of the water supplied to the sewered area shall be obtained and analyzed for the following constituents:

Bicarbonate	Magnesium	Specific Conductance
Boron	Nitrate	Sulfate
Calcium	Potassium	Total Dissolved Solids
Chloride	pH	Total Hardness
Fluoride	Sodium	

2. All of the above constituents shall be expressed in "mg/l" except specific conductance and pH, which shall be expressed in "micromhos/cm" and "pH units," respectively.

3. Monthly reports shall be submitted stating the amount (in percentage or acre-feet) supplied to the sewered area from each source of water and the resulting flow-weighted water supply quality for constituents specified in Section G.1. above.

H. WATER RECLAMATION MONITORING AND REPORTING:

Whenever recycled water is supplied to a user, the volume of recycled water, the user of recycled water, the locations of those sites including the names of the groundwater subbasins underlying the recycled water use sites, type of use (e.g. irrigation, industrial, etc) and the dates at which water is supplied shall be recorded. A summary report of water use by groundwater subbasins shall be submitted annually. This report shall be included in the annual report required in Section A.13. above.

I. STORM WATER MONITORING:

The discharger shall comply with Attachment “D” – Storm Water Monitoring and Reporting Requirements.

J. PRETREATMENT MONITORING AND REPORTING:

1. The discharger shall submit to the Regional Board, the State Water Resources Control Board and the EPA Region 9, a semi-annual compliance status report. The semi-annual compliance status reports shall cover the periods January 1 - June 30 and July 1 - December 31. Each report shall be submitted by the end of the quarter following the six-month period. The report for January 1 - June 30 may be included in the annual report. This semi-annual reporting requirement shall commence for the first full semi-annual following issuance of this Order. The reports shall identify:

    a. All significant industrial users (SIUs) which violated any standards or reporting requirements during that quarter;

    b. The violations committed (distinguish between categorical and local limits);

    c. The enforcement actions undertaken; and

    d. The status of active enforcement actions from previous periods, including closeouts (facilities under previous enforcement actions which attained compliance during the quarter).

2. Annually, the discharger shall submit a report to the Regional Board, the State Water Resources Control Board and the EPA Region 9 describing the pretreatment activities within the service area during the previous year. In the event that any control authority within the service area is not in compliance with any conditions or requirements of this Order or their approved pretreatment program (such as due to industrial user discharges, inter-jurisdictional agency agreement implementation issues, or other causes,) then the discharger shall also include the reasons for non-compliance and state how and when the discharger and the control authority shall comply with such conditions and requirements. This annual report shall cover operations from July 1 through June 30 of each fiscal year and is due on October 31 of each year. The report shall contain, but not be limited to, the following information:

    a. A summary of analytical results from representative, flow-proportioned, 24-hour composite sampling of the POTW's influent and effluent wastewaters for those pollutants which are known or suspected to be discharged by industrial users (IUs) as identified by EPA under Section 307(a) of the CWA. The summary will include the result of annual full priority pollutant scan, with quarterly samples analyzed only for those pollutants[20] detected in the full scan. The discharger shall also provide any influent or effluent monitoring data for non-priority pollutants which the discharger believes may be causing or contributing to Interference, Pass Through or adversely impacting sludge quality. Sampling and analysis shall be performed in accordance with the techniques prescribed in 40 CFR 136 and amendments thereto.

---

20 *The discharger is not required to analyze for asbestos.*

b. A discussion of any upset, interference, or pass-through incidents at the treatment plant (if any), which the discharger knows or suspects were caused by IUs of the POTW system. The discussion shall include the following:

1) The reasons why the incidents occurred, the corrective actions taken, and, if known, the name and address of the IU(s) responsible.

2) A review of the applicable pollutant limitations to determine whether any additional limitations, or changes to existing requirements, may be necessary to prevent pass through, interference or noncompliance with sludge disposal requirements.

c. A complete and updated list of the discharger's significant industrial users (SIUs), including names, Standard Industrial Classification (SIC) code(s) and addresses, and a list of any SIU deletions and/or additions. The discharger shall provide a brief explanation for each deletion. The SIU list shall identify the SIUs subject to Federal Categorical Standards by specifying which set(s) of standards are applicable to each SIU. The list shall also indicate which SIUs are subject to local limitations more stringent than Federal Categorical Standards and those which are not subject to local limits.

d. A list or table characterizing the industrial compliance status of each SIU, including:

1) SIU name;
2) Industrial category;
3) The type (processes) of wastewater treatment in place;
4) Number of samples taken by the POTW during the year;
5) Number of samples taken by the SIU during the year;
6) Whether all needed certifications (if allowed) were provided by SIUs which have limits for total toxic organics;
7) Federal and Regional Standards violated during the year, reported separately;
8) Whether the SIU at any time in the year was in Significant Noncompliance (SNC)[21], as defined by 40 CFR 403.12 (f)(2)(vii); and
9) A summary of enforcement actions against the SIU taken during the year, including the type of action, final compliance date, and amount of fines assessed/collected (if any). Proposed actions, if known, should be included.
10) Number of inspections conducted at each SIU during the year.

---

[21] *SNC is determined at the beginning of each quarter based on data of the previous six months.*

e. A compliance summary table which includes:

1) SIU's which were in SNC at any time during the year;
2) The total number of SIUs which are in SNC with pretreatment compliance schedules during the year;
3) The total number of notices of violation and administrative orders issued against SIUs during the year;
4) The total number of civil and criminal judicial actions filed against SIUs during the year;
5) The number of SIUs which were published as being in SNC during the year; and
6) The number of IUs from which penalties were collected during the year.

f. A short description of any significant changes in operating the pretreatment program which differ from the previous year including, but not limited to changes concerning:

1) the program's administrative structure;
2) local industrial discharge limitations;
3) monitoring program or monitoring frequencies;
4) legal authority or enforcement policy;
5) funding mechanisms; and
6) resource requirements and/or staffing levels.

g. A summary of the annual pretreatment budget, including the cost of pretreatment program functions and equipment purchases.

h. A summary of public participation activities to involve and inform the public.

i. A description of any changes in sludge disposal methods and a discussion of any concerns not described elsewhere in the report.

3. The cumulative number of industrial users that the discharger has notified regarding Baseline Monitoring Reports and the cumulative number of industrial user responses.

4. The discharger shall submit the quarterly compliance status reports and the annual pretreatment report to EPA Region 9, the State Board and the Regional Board at the following addresses:

   a. Regional Administrator
      U.S. Environmental Protection Agency
      Region 9 - Attention WTR-7
      75 Hawthorne Street
      San Francisco, CA 94105

   b. State Water Resources Control Board
      Division of Water Quality, Pretreatment Unit
      P.O. Box 944213
      Sacramento, CA 94244-2130

   c. Gerard J. Thibeault, Executive Officer
      California Regional Water Quality Control Board
      Santa Ana Region
      3737 Main Street, Suite 500
      Riverside, CA 92501-3348

K. REPORTING:

1. Monitoring reports shall be submitted by the dates in the following schedule:

Report	Reporting period	Report Due Date
Influent and effluent constituents	Monthly	By the 30th day of the month following the monitoring period
Dewatering Wastewater Discharges	"	"
Sand Canyon Reservoir Monitoring	"	"
Toxicity Monitoring	E.10., above	"
Water Supply Quality	Monthly	"
Receiving Water Monitoring	"	"
Semi-Annual Priority Pollutants	July and January	By the 30th day of the month following the monitoring period
Semi-annual pretreatment report	Semi-annually	March 31 and September 30 (or October 31)
Annual Pretreatment Report	Annually	October 31
Annual Report per Section A.13., above	See Section A.13., above	March 1, each year
Annual Water Supply Parameters from each source	Annually	Fourth Monday of September

2. The following reports shall also be submitted by the dates indicated:

REQUIRED REPORTS OF ORDER NO. 01-95	
Report	Report Due Date
Report per Section G.2.	March 1, 2002
Report per Section G.3.	March 1, 2002

REQUIRED REPORTS OF ORDER NO. 01-95	
Report	Report Due Date
Report per Section G.4.	June 1, 2002
Report per Section G.5.	June 1, 2002
Report per Section G.6.	June 1, 2002
Report per Section G.7.	See Section G.7. of the Order
Report per Section G.8.	See Section G.8. of the Order
Report per Section G.9	See Section G.9. of the Order
Report per Section G.10	See Section G.10. of the Order
Report per Section G.11.	90-days after effective date of the Order (see Section G.11. of the Order)
Report of Waste Discharge per Section G.12.	180-days before any plant changes (see Section G.12. of the Order)
Non-compliance Reporting per Section G.13.	within 24-hours followed by a written report within 5-days (see Section G.13. of the Order)
This table attempts to summarize all of the special reports that are required to be submitted in accordance with Order No. 01-95; however, the omission of a report from this table does not absolve the discharger from the requirement to submit that report.	

Gerard J. Thibeault
Executive Officer

December 19, 2001

PRACTICAL QUANTITATION LEVELS FOR COMPLIANCE DETERMINATION

	Constituent	RL µg/l	Analysis Method
1	Arsenic	7.5	GF/AA
2	Barium	20	ICP/GFAA
3	Cadmium	15	ICP
4	Chromium (VI)	15.0	ICP
5	Cobalt	10.0	GF/AA
6	Copper	19.0	GF/ICP
7	Cyanide	50.0	335.2/335.3
8	Iron	100.0	ICP
9	Lead	26.0	GF/AA
10	Manganese	20.0	ICP
11	Mercury	0.5	CV/AA
12	Nickel	50.0	ICP
13	Selenium	14.0	GF/HYDRIDE GENERATION
14	Silver	16.0	ICP
15	Zinc	20	ICP
16	1,2 - Dichlorobenzene	5.0	601/602/624
17	1,3 - Dichlorobenzene	5.0	601
18	1,4 - Dichlorobenzene	5.0	601
18	2,4 - Dichlorophenol	10.0	625/604
20	4 - Chloro -3-methylphenol	10.0	625/604
21	Aldrin	0.04	608
22	Benzene	1.0	602/624
23	Chlordane	0.30	608
24	Chloroform	5.0	601/624
25	DDT	0.10	608
26	Dichloromethane	5.0	601/624
27	Dieldrin	0.10	608
28	Fluorantene	10.0	625/610
29	Endosulfan	0.50	608
30	Endrin	0.10	608
31	Halomethanes	5.0	601/624
32	Heptachlor	0.03	608
33	Hepthachlor Epoxide	0.05	608
34	Hexachlorobenzene	10.0	625
35	Hexachlorocyclohexane		
	Alpha	0.03	608
	Beta	0.03	608
	Gamma	0.03	608
36	PAH's	10.0	625/610
37	PCB	1.0	608
38	Pentachlorophenol	10.0	625/604
39	Phenol	10.0	625/604
40	TCDD Equivalent	0.05	8280
41	Toluene	1.0	602/625
42	Toxaphene	2.0	608
43	Tributyltin	0.02	GC
44	2,4,6-Trichlorophenol	10.0	625/604

MINIMUM LEVELS IN PPB (μg/l)

Table 1- VOLATILE SUBSTANCES[1]	GC	GCMS
Acrolein	2.0	5
Acrylonitrile	2.0	2
Benzene	0.5	2
Bromoform	0.5	2
Carbon Tetrachloride	0.5	2
Chlorobenzene	0.5	2
Chlorodibromomethane	0.5	2
Chloroethane	0.5	2
Chloroform	0.5	2
Dichlorobromomethane	0.5	2
1,1 Dichloroethane	0.5	1
1,2 Dichloroethane	0.5	2
1,1 Dichloroethylene	0.5	2
1,2 Dichloropropane	0.5	1
1,3 Dichloropropylene (volatile)	0.5	2
Ethylbenzene	0.5	2
Methyl Bromide (*Bromomethane*)	1.0	2
Methyl Chloride (*Chloromethane*)	0.5	2
Methylene Chloride (*Dichloromethane*)	0.5	2
1,1,2,2 Tetrachloroethane	0.5	1
Tetrachloroethylene	0.5	2
Toluene	0.5	2
trans-1,2 Dichloroethylene	0.5	1
1,1,1 Trichloroethane	0.5	2
1,1,2 Trichloroethane	0.5	2
Trichloroethylene	0.5	2
Vinyl Chloride	0.5	2
1,2 Dichlorobenzene (volatile)	0.5	2
1,3 Dichlorobenzene (volatile)	0.5	2
1,4 Dichlorobenzene (volatile)	0.5	2

Selection and Use of Appropriate ML Value:

ML Selection: When there is more than one ML value for a given substance, the discharger may select any one of those ML values, and their associated analytical methods, listed in Attachment "A" that are below the calculated effluent limitation for compliance determination. If no ML value is below the effluent limitation, then the discharger shall select the lowest ML value, and its associated analytical method, listed in this Attachment "A".

ML Usage: The ML value in Attachment "A" represents the lowest quantifiable concentration in a sample based on the proper application of all method-based analytical procedures and the absence of any matrix interferences. Assuming that all method-specific analytical steps are followed, the ML value will also represent, after the appropriate application of method-specific factors, the lowest standard in the calibration curve for that specific analytical technique. Common analytical practices sometimes require different treatment of the sample relative to calibration standards.

Note: chemical names in parenthesis and italicized is another name for the constituent.

[1] *The normal method-specific factor for these substances is 1, therefore, the lowest standard concentration in the calibration curve is equal to the above ML value for each substance.*

MINIMUM LEVELS IN PPB (μg/l)

Table 2 – Semi-Volatile Substances[2]	GC	GCMS	LC
2-Chloroethyl vinyl ether	1	1	
2 Chlorophenol	2	5	
2,4 Dichlorophenol	1	5	
2,4 Dimethylphenol	1	2	
4,6 Dinitro-2-methylphenol	10	5	
2,4 Dinitrophenol	5	5	
2- Nitrophenol		10	
4- Nitrophenol	5	10	
4 Chloro-3-methylphenol	5	1	
2,4,6 Trichlorophenol	10	10	
Acenaphthene	1	1	0.5
Acenaphthylene		10	0.2
Anthracene		10	2
Benzidine		5	
Benzo (a) Anthracene (*1,2 Benzanthracene*)	10	5	
Benzo(a) pyrene (*3,4 Benzopyrene*)		10	2
Benzo (b) Flouranthene (*3,4 Benzofluoranthene*)		10	10
Benzo(g,h,i)perylene		5	0.1
Benzo(k)fluoranthene		10	2
bis 2-(1-Chloroethoxyl) methane		5	
bis(2-chloroethyl) ether	10	1	
bis(2-Chloroisopropyl) ether	10	2	
bis(2-Ethylhexyl) phthalate	10	5	
4-Bromophenyl phenyl ether	10	5	
Butyl benzyl phthalate	10	10	
2-Chloronaphthalene		10	
4-Chlorophenyl phenyl ether		5	
Chrysene		10	5
Dibenzo(a,h)-anthracene		10	0.1
1,2 Dichlorobenzene (semivolatile)	2	2	
1,3 Dichlorobenzene (semivolatile)	2	1	
1,4 Dichlorobenzene (semivolatile)	2	1	
3,3' Dichlorobenzidine		5	
Diethyl phthalate	10	2	
Dimethyl phthalate	10	2	
di-n-Butyl phthalate		10	
2,4 Dinitrotoluene	10	5	
2,6 Dinitrotoluene		5	
di-n-Octyl phthalate		10	
1,2 Diphenylhydrazine		1	
Fluoranthene	10	1	0.05
Fluorene		10	0.1
Hexachloro-cyclopentadiene	5	5	
1,2,4 Trichlorobenzene	1	5	

MINIMUM LEVELS IN PPB (μg/l)

Table 2 - SEMI-VOLATILE SUBSTANCES[2]	GC	GCMS	LC	COLOR
Pentachlorophenol	1	5		
Phenol [3]	1	1		50
Hexachlorobenzene	5	1		
Hexachlorobutadiene	5	1		
Hexachloroethane	5	1		
Indeno(1,2,3,cd)-pyrene		10	0.05	
Isophorone	10	1		
Naphthalene	10	1	0.2	
Nitrobenzene	10	1		
N-Nitroso-dimethyl amine	10	5		
N-Nitroso -di n-propyl amine	10	5		
N-Nitroso diphenyl amine	10	1		
Phenanthrene		5	0.05	
Pyrene		10	0.05	

Table 3– INORGANICS[4]	FAA	GFAA	ICP	ICPMS	SPGFAA	HYDRIDE	CVAA	COLOR	DCP
Antimony	10	5	50	0.5	5	0.5			1000
Arsenic		2	10	2	2	1		20	1000
Beryllium	20	0.5	2	0.5	1				1000
Cadmium	10	0.5	10	0.25	0.5				1000
Chromium (total)	50	2	10	0.5	1				1000
Chromium VI	5							10	
Copper	25	5	10	0.5	2				1000
Lead	20	5	5	0.5	2				10000
Mercury				0.5			0.2		
Nickel	50	5	20	1	5				1000
Selenium		5	10	2	5	1			1000
Silver	10	1	10	0.25	2				1000
Thallium	10	2	10	1	5				1000
Zinc	20		20	1	10				1000
Cyanide								5	

---

2 *With the exception of phenol by colorimetric technique, the normal method-specific factor for these substances is 1000, therefore, the lowest standards concentration in the calibration curve is equal to the above ML value for each substance multiplied by 1000.*

3 *Phenol by colorimetric technique has a factor of 1*

4 *The normal method-specific factor for these substances is 1, therefore, the lowest standard concentration in the calibration curve is equal to the above ML value for each substance.*

MINIMUM LEVELS IN PPB (μg/l)

Table 4- PESTICIDES – PCBs[5]	GC
Aldrin	0.005
alpha–BHC (*a-Hexachloro-cyclohexane*)	0.01
beta–BHC (*b-Hexachloro-cyclohexane*)	0.005
Gamma–BHC (*Lindane; g-Hexachloro-cyclohexane*)	0.02
Delta-BHC (*d-Hexachloro-cyclohexane*)	0.005
Chlordane	0.1
4,4'-DDT	0.01
4,4'-DDE	0.05
4,4'-DDD	0.05
Dieldrin	0.01
Alpha-Endosulfan	0.02
Beta-Endosulfan	0.01
Endosulfan Sulfate	0.05
Endrin	0.01
Endrin Aldehyde	0.01
Heptachlor	0.01
Heptachlor Epoxide	0.01
PCB 1016	0.5
PCB 1221	0.5
PCB 1232	0.5
PCB 1242	0.5
PCB 1248	0.5
PCB 1254	0.5
PCB 1260	0.5
Toxaphene	0.5

Techniques:
GC - Gas Chromatography
GCMS - Gas Chromatography/Mass Spectrometry
HRGCMS - High Resolution Gas Chromatography/Mass Spectrometry (i.e., EPA 1613, 1624, or 1625)
LC - High Pressure Liquid Chromatography
FAA - Flame Atomic Absorption
GFAA - Graphite Furnace Atomic Absorption
HYDRIDE - Gaseous Hydride Atomic Absorption
CVAA - Cold Vapor Atomic Absorption
ICP - Inductively Coupled Plasma
ICPMS - Inductively Coupled Plasma/Mass Spectrometry
SPGFAA - Stabilized Platform Graphite Furnace Atomic Absorption (i.e., EPA 200.9)
DCP - Direct Current Plasma
COLOR - Colorimetric

---

[5] *The normal method-specific factor for these substances is 100, therefore, the lowest standard concentration in the calibration curve is equal to the above ML value for each substance multiplied by 100.*

EPA PRIORITY POLLUTANT LIST

Metals		Acid Extractibles		Base/Neutral Extractibles (continuation)	
1.	Antimony	45.	2-Chlorophenol	91.	Hexachloroethane
2.	Arsenic	46.	2,4-Dichlorophenol	92.	Indeno (1,2,3-cd) Pyrene
3.	Beryllium	47.	2,4-Dimethylphenol	93.	Isophorone
4.	Cadmium	48.	2-Methyl-4,6-Dinitrophenol	94.	Naphthalene
5a.	Chromium (III)	49.	2,4-Dinitrophenol	95.	Nitrobenzene
5b.	Chromium (VI)	50.	2-Nitrophenol	96.	N-Nitrosodimethylamine
6.	Copper	51.	4-Nitrophenol	97.	N-Nitrosodi-N-Propylamine
7.	Lead	52.	3-Methyl-4-Chlorophenol	98.	N-Nitrosodiphenylamine
8.	Mercury	53.	Pentachlorophenol	99.	Phenanthrene
9.	Nickel	54.	Phenol	100.	Pyrene
10.	Selenium	55.	2, 4, 6 – Trichlorophenol	101.	1,2,4-Trichlorobenzene
11.	Silver	**Base/Neutral Extractibles**		**Pesticides**	
12.	Thallium	56.	Acenaphthene	102.	Aldrin
13.	Zinc	57.	Acenaphthylene	103.	Alpha BHC
Miscellaneous		58.	Anthracene	104.	Beta BHC
14.	Cyanide	59.	Benzidine	105.	Delta BHC
15.	Asbestos (not required unless requested)	60.	Benzo (a) Anthracene	106.	Gamma BHC
16.	2,3,7,8-Tetrachlorodibenzo-P-Dioxin (TCDD)	61.	Benzo (a) Pyrene	107.	Chlordane
Volatile Organics		62.	Benzo (b) Fluoranthene	108.	4, 4' - DDT
17.	Acrolein	63.	Benzo (g,h,i) Perylene	109.	4, 4' - DDE
18.	Acrylonitrile	64.	Benzo (k) Fluoranthene	110.	4, 4' - DDD
19.	Benzene	65.	Bis (2-Chloroethoxy) Methane	111.	Dieldrin
20.	Bromoform	66.	Bis (2-Chloroethyl) Ether	112.	Alpha Endosulfan
21.	Carbon Tetrachloride	67.	Bis (2-Chloroisopropyl) Ether	113.	Beta Endosulfan
22.	Chlorobenzene	68.	Bis (2-Ethylhexyl) Phthalate	114.	Endosulfan Sulfate
23.	Chlorodibromomethane	69.	4-Bromophenyl Phenyl Ether	115.	Endrin
24.	Chloroethane	70.	Butylbenzyl Phthalate	116.	Endrin Aldehyde
25.	2-Chloroethyl Vinyl Ether	71.	2-Chloronaphthalene	117.	Heptachlor
26.	Chloroform	72.	4-Chlorophenyl Phenyl Ether	118.	Heptachlor Epoxide
27.	Dichlorobromomethane	73.	Chrysene	119.	PCB 1016
28.	1,1-Dichloroethane	74.	Dibenzo (a,h) Anthracene	120.	PCB 1221
29.	1,2-Dichloroethane	75.	1,2-Dichlorobenzene	121.	PCB 1232
30.	1,1-Dichloroethylene	76.	1,3-Dichlorobenzene	122.	PCB 1242
31.	1,2-Dichloropropane	77.	1,4-Dichlorobenzene	123.	PCB 1248
32.	1,3-Dichloropropylene	78.	3,3'-Dichlorobenzidine	124.	PCB 1254
33.	Ethylbenzene	79.	Diethyl Phthalate	125.	PCB 1260
34.	Methyl Bromide	80.	Dimethyl Phthalate	126.	Toxaphene
35.	Methyl Chloride	81.	Di-n-Butyl Phthalate		
36.	Methylene Chloride	82.	2,4-Dinitrotoluene		
37.	1,1,2,2-Tetrachloroethane	83.	2-6-Dinitrotoluene		
38.	Tetrachloroethylene	84.	Di-n-Octyl Phthalate		
39.	Toluene	85.	1,2-Dipenylhydrazine		
40.	1,2-Trans-Dichloroethylene	86.	Fluoranthene		
41.	1,1,1-Trichloroethane	87.	Fluorene		
42.	1,1,2-Trichloroethane	88.	Hexachlorobenzene		
43.	Trichloroethylene	89.	Hexachlorobutadiene		
44.	Vinyl Chloride	90.	Hexachlorocyclopentadiene	Revised: 7/7/2000	

STORMWATER MONITORING PROGRAM AND REPORTING REQUIREMENTS

1. *Implementation Schedule*

The discharger shall implement a stormwater monitoring program. Any necessary revisions to the stormwater monitoring program shall be implemented in a timely manner and shall be in accordance with the following requirements. The discharger may use the monitoring results conducted in accordance with this stormwater monitoring program to satisfy the pollutant/parameter reduction requirements in Section 5.c., below, and Sampling and Analysis Exemptions and Reduction Certifications in Section 10, below.

2. *Objectives*

The objectives of the monitoring program are to:

a. Ensure that storm water discharges are in compliance with waste discharge requirements specified in Order No. 01-95.

b. Ensure that practices conducted at the facility to reduce or prevent pollutants in storm water discharges and in authorized non-storm water discharges are evaluated and revised to meet changing conditions.

c. Aid in the implementation and revision of the SWPPP required by Attachment "A" Stormwater Pollution Prevention Plan of Order No. 01-95.

d. Measure the effectiveness of best management practices (BMPs) to prevent or reduce pollutants in storm water discharges and authorized non-storm water discharges. Much of the information necessary to develop the monitoring program, such as discharge locations, drainage areas, pollutant sources, etc., should be found in the Storm Water Pollution Prevention Plan (SWPPP). The facility's monitoring program shall be a written, site-specific document that shall be revised whenever appropriate and be readily available for review by employees or Regional Board inspectors.

3. *Non-Storm Water Discharge Visual Observations*

a. The discharger shall visually observe all drainage areas within their facility for the presence of unauthorized non-storm water discharges;

b. The discharger shall visually observe the facility's authorized non-storm water discharges and their sources;

c. The visual observations required above shall occur quarterly, during daylight hours, on days with no storm water discharges, and during scheduled facility operating hours[1]. Quarterly visual observations shall be conducted in each of the following periods: January-March, April-June, July-September, and October-December. The discharger shall conduct quarterly visual observations within 6-18 weeks of each other.

d. Visual observations shall document the presence of any discolorations, stains, odors, floating materials, etc., as well as the source of any discharge. Records shall be maintained of the visual observation dates, locations observed, observations, and response taken to eliminate unauthorized non-storm water discharges and to reduce or prevent pollutants from contacting non-storm water discharges. The SWPPP shall be revised, as necessary, and implemented in accordance with Attachment "A," Stormwater Pollution Prevention Plan of Order No. 01-95.

4. *Storm Water Discharge Visual Observations*

a. With the exception of those facilities described in Section 4.d., below, the discharger shall visually observe storm water discharges from one storm event per month during the wet season (October 1-May 30). These visual observations shall occur during the first hour of discharge and at all discharge locations. Visual observations of stored or contained storm water shall occur at the time of release.

b. Visual observations are only required of storm water discharges that occur during daylight hours that are preceded by at least three (3) working days[2] without storm water discharges and that occur during scheduled facility operating hours.

c. Visual observations shall document the presence of any floating and suspended material, oil and grease, discolorations, turbidity, odor, and source of any pollutants. Records shall be maintained of observation dates, locations observed, observations, and response taken to reduce or prevent pollutants in storm water discharges. The SWPPP shall be revised, as necessary, and implemented in accordance with Attachment "A," Stormwater Pollution Prevention Plan of Order No. 01-95.

---

1 *"Scheduled facility operating hours" are the time periods when the facility is staffed to conduct any function related to industrial activity, but excluding time periods where only routine maintenance, emergency response, security, and/or janitorial services are performed.*

2 *Three (3) working days may be separated by non-working days such as weekends and holidays provided that no storm water discharges occur during the three (3) working days and the non-working days.*

d. The discharger with storm water containment facilities shall conduct monthly inspections of their containment areas to detect leaks and ensure maintenance of adequate freeboard. Records shall be maintained of the inspection dates, observations, and any response taken to eliminate leaks and to maintain adequate freeboard.

5. *Sampling and Analysis*

a. The discharger shall collect storm water samples during the first hour of discharge from (1) the first storm event of the wet season, and (2) at least one other storm event in the wet season. All storm water discharge locations shall be sampled. Sampling of stored or contained storm water shall occur at the time the stored or contained storm water is released. The discharger that does not collect samples from the first storm event of the wet season are still required to collect samples from two other storm events of the wet season and shall explain in the "Annual Stormwater Report" (see Section 12, below) why the first storm event was not sampled.

b. Sample collection is only required of storm water discharges that occur during scheduled facility operating hours and that are preceded by at least (3) three working days without storm water discharge.

c. The samples shall be analyzed for:

(1) Total suspended solids (TSS), pH, specific conductance, and total organic carbon (TOC). Oil and grease (O&G) may be substituted for TOC;

(2) Toxic chemicals and other pollutants that are likely to be present in storm water discharges in significant quantities. If these pollutants are not detected in significant quantities after two consecutive sampling events, the discharger may eliminate the pollutant from future sample analysis until the pollutant is likely to be present again;

(3) The discharger is not required to analyze a parameter when either of the two following conditions are met: (a) the parameter has not been detected in significant quantities from the last two consecutive sampling events, or (b) the parameter is not likely to be present in storm water discharges and authorized non-storm water discharges in significant quantities based upon the discharger's evaluation of the facilities industrial activities, potential pollutant sources, and SWPPP; and

(4) Other parameters as required by the Regional Board.

6. *Sample Storm Water Discharge Locations*

a. The discharger shall visually observe and collect samples of storm water discharges from all drainage areas that represent the quality and quantity of the facility's storm water discharges from the storm event.

b. If the facility's storm water discharges are commingled with run-on from surrounding areas, the discharger should identify other visual observation and sample collection locations that have not been commingled by run-on and that represent the quality and quantity of the facility's storm water discharges from the storm event.

c. If visual observation and sample collection locations are difficult to observe or sample (e.g., sheet flow, submerged outfalls), the discharger shall identify and collect samples from other locations that represent the quality and quantity of the facility's storm water discharges from the storm event.

d. The discharger that determines that the industrial activities and BMPs within two or more drainage areas are substantially identical may either (1) collect samples from a reduced number of substantially identical drainage areas, or (2) collect samples from each substantially identical drainage area and analyze a combined sample from each substantially identical drainage area. The discharger must document such a determination in the annual stormwater report.

7. Visual Observation and Sample Collection Exceptions

The discharger is required to be prepared to collect samples and conduct visual observations at the beginning of the wet season (October 1) and throughout the wet season until the minimum requirements of Sections 4. and 5., above, are completed with the following exceptions:

a. The discharger is not required to collect a sample and conduct visual observations in accordance with Section 4 and Section 5, above, due to dangerous weather conditions, such as flooding, electrical storm, etc., when storm water discharges begin after scheduled facility operating hours or when storm water discharges are not preceded by three working days without discharge. Visual observations are only required during daylight hours. The discharger that does not collect the required samples or visual observations during a wet season due to these exceptions shall include an explanation in the "Annual Stormwater Report" why the sampling or visual observations could not be conducted.

b. The discharger may conduct visual observations and sample collection more than one hour after discharge begins if the discharger determines that the objectives of this section will be better satisfied. The discharger shall include an explanation in the "Annual Stormwater Report" why the visual observations and sample collection should be conducted after the first hour of discharge.

8. *Alternative Monitoring Procedures*

The discharger may propose an alternative monitoring program that meets Section 2, above, monitoring program objectives for approval by the Regional Board's Executive Officer. The discharger shall continue to comply with the monitoring requirements of this section and may not implement an alternative monitoring plan until the alternative monitoring plan is approved by the Regional Board's Executive Officer. Alternative monitoring plans are subject to modification by the Regional Board's Executive Officer.

9. *Monitoring Methods*

a. The discharger shall explain how the facility's monitoring program will satisfy the monitoring program objectives of Section 2., above. This shall include:

(1) Rationale and description of the visual observation methods, location, and frequency;

(2) Rationale and description of the sampling methods, location, and frequency; and

(3) Identification of the analytical methods and corresponding method detection limits used to detect pollutants in storm water discharges. This shall include justification that the method detection limits are adequate to satisfy the objectives of the monitoring program.

b. All sampling and sample preservation shall be in accordance with the current edition of "Standard Methods for the Examination of Water and Wastewater" (American Public Health Association). All monitoring instruments and equipment (including the discharger's own field instruments for measuring pH and Electro-conductivity) shall be calibrated and maintained in accordance with manufacturers' specifications to ensure accurate measurements. All laboratory analyses must be conducted according to test procedures under 40 CFR Part 136, unless other test procedures have been specified in Order No. 01-95 or by the Regional Board's Executive Officer. All metals shall be reported as total recoverable metals or unless otherwise specified in Order No. 01-95. With the exception of analysis conducted by the discharger, all laboratory analyses shall be conducted at a laboratory certified for such analyses by the State Department of Health Services. The discharger may conduct their own sample analyses if the discharger has sufficient capability (qualified employees, laboratory equipment, etc.) to adequately perform the test procedures.

10. *Sampling and Analysis Exemptions and Reductions*

A discharger who qualifies for sampling and analysis exemptions, as described below in Section 10.a.(1) or who qualifies for reduced sampling and analysis, as described below in Section 10.b., must submit the appropriate certifications and required documentation to the Regional Board prior to the wet season (October 1) and recertify as part of the annual stormwater report submittal. A discharger that qualifies for either the Regional Board or local agency certification programs, as described below in Section 10.a.(2) and (3), shall submit certification and documentation in accordance with the requirements of those programs. The discharger who provides certification(s) in accordance with this section are still required to comply with all other monitoring program and reporting requirements. The discharger shall prepare and submit their certification(s) using forms and instructions provided by the State Water Board, Regional Board, or local agency or shall submit their information on a form that contains equivalent information. The discharger whose facility no longer meets the certification conditions must notify the Regional Board's Executive Officer (and local agency) within 30 days and immediately comply with Section 5., Sampling and Analysis requirements. Should a Regional Board (or local agency) determine that a certification does not meet the conditions set forth below, the discharger must immediately comply with Section 5., Sampling and Analysis requirements.

a. Sampling and Analysis Exemptions

A discharger is not required to collect and analyze samples in accordance with Section 5., above, if the discharger meets all of the conditions of one of the following certification programs:

(1) No Exposure Certification (NEC)

This exemption is designed primarily for those facilities where all industrial activities are conducted inside buildings and where all materials stored and handled are not exposed to storm water. To qualify for this exemption, the discharger must certify that their facilities meet all of the following conditions:

(a) All prohibited non-storm water discharges have been eliminated or otherwise permitted.

(b) All authorized non-storm water discharges have been identified and addressed in the SWPPP.

(c) All areas of past exposure have been inspected and cleaned, as appropriate.

(d) All significant materials related to industrial activity (including waste materials) are not exposed to storm water or authorized non-storm water discharges.

(e) All industrial activities and industrial equipment are not exposed to storm water or authorized non-storm water discharges.

(f) There is no exposure of storm water to significant materials associated with industrial activity through other direct or indirect pathways such as from industrial activities that generate dust and particulates.

(g) There is periodic re-evaluation of the facility to ensure conditions (a), (b), (d), (e), and (f) above are continuously met. At a minimum, re-evaluation shall be conducted once a year.

(2) Regional Board Certification Programs

The Regional Board may grant an exemption to the Section 5. Sampling and Analysis requirements if it determines that a discharger has met the conditions set forth in a Regional Board certification program. Regional Board certification programs may include conditions to (a) exempt the discharger whose facilities infrequently discharge storm water to waters of the United States, and (b) exempt the discharger that demonstrate compliance with the terms and conditions of Order No. 01-95.

(3) Local Agency Certifications

A local agency may develop a local agency certification program. Such programs must be approved by the Regional Board. An approved local agency program may either grant an exemption from Section 5. Sampling and Analysis requirements or reduce the frequency of sampling if it determines that a discharger has demonstrated compliance with the terms and conditions of the Industrial Activities Storm Water General Permit Order No. 97-03-DWQ, which was adopted by the State Water Resources Control Board on April 17, 1997.

b. Sampling and Analysis Reduction

(1) A discharger may reduce the number of sampling events required to be sampled for the remaining term of Order No. 01-95 if the discharger provides certification that the following conditions have been met:

(a) The discharger has collected and analyzed samples from a minimum of six storm events from all required drainage areas;

(b) All prohibited non-storm water discharges have been eliminated or otherwise permitted;

(c) The discharger demonstrates compliance with the terms and conditions of Order No. 01-95 for the previous two years (i.e., completed Annual Stormwater Reports, performed visual observations, implemented appropriate BMPs, etc.);

(d) The discharger demonstrates that the facility's storm water discharges and authorized non-storm water discharges do not contain significant quantities of pollutants; and

(e) Conditions (b), (c), and (d) above are expected to remain in effect for a minimum of one year after filing the certification.

(2) Unless otherwise instructed by the Regional Board, the discharger shall collect and analyze samples from two additional storm events during the remaining term of Order No. 01-95 in accordance with Table A, below. The discharger shall collect samples of the first storm event of the wet season. The discharger that does not collect samples from the first storm event of the wet season shall collect samples from another storm event during the same wet season. The discharger that does not collect a sample in a required wet season shall collect the sample from another storm event in the next wet season. The discharger shall explain in the "Annual Stormwater Report" why the first storm event of a wet season was not sampled.

11. *Records*

Records of all storm water monitoring information and copies of all reports (including the Annual Stormwater Reports) required by Order No. 01-95 shall be retained for a period of at least five years. These records shall include:

a. The date, place, and time of site inspections, sampling, visual observations, and/or measurements;

b. The individual(s) who performed the site inspections, sampling, visual observations, and or measurements;

c. Flow measurements or estimates;

d. The date and approximate time of analyses;

e. The individual(s) who performed the analyses;

f. Analytical results, method detection limits, and the analytical techniques or methods used;

g. Quality assurance/quality control records and results;

h. Non-storm water discharge inspections and visual observations and storm water discharge visual observation records (see Sections 3. and 4., above);

i. Visual observation and sample collection exception records (see Section 5.a, 6.d, 7, and 10.b.(2), above;

j. All calibration and maintenance records of on-site instruments used;

k. All Sampling and Analysis Exemption and Reduction certifications and supporting documentation (see Section 10);

l. The records of any corrective actions and follow-up activities that resulted from the visual observations.

12. Annual Report

The discharger shall submit an Annual Stormwater Report by July 1 of each year to the Executive Officer of the Regional Board and to the local agency (if requested). The report shall include a summary of visual observations and sampling results, an evaluation of the visual observation and sampling and analysis results, laboratory reports, the Annual Comprehensive Site Compliance Evaluation Report required in Section 9. of Attachment "A" of Order No. 01-95, an explanation of why a facility did not implement any activities required by Order No. 01-95 (if not already included in the Evaluation Report), and records specified in Section 11., above. The Annual Stormwater Report shall be signed and certified in accordance with Section A.18. "Monitoring and Reporting Requirements" of Monitoring and Reporting Program No. 01-95. The discharger shall prepare and submit their Annual Stormwater Reports using the annual report forms provided by the State Water Board or Regional Board or shall submit their information on a form that contains equivalent information.

13. Watershed Monitoring Option

Regional Boards may approve proposals to substitute watershed monitoring for some or all of the requirements of this section if the Regional Board finds that the watershed monitoring will provide substantially similar monitoring information in evaluating discharger compliance with the requirements of Order No. 01-95.