INVITATION FOR BIDS (IFB) SMALL BUSINESS SET ASIDE

BERRYESSA FLOOD CONTROL CHANNEL IMPROVEMENT PROJECT

MILPITAS, SANTA CLARA COUNTY, CALIFORNIA

IFB NO. W912P7-16-C-0008

CONFORMED

US ARMY CORPS OF ENGINEERS
San Francisco District

DIRECTIVE NO.
PROJECT NO.

ATTENTION TO BIDDERS:

1. FACTS ABOUT THE USE OF INDIVIDUAL SURETIES

The Federal Acquisition Regulation (FAR 28.200) permits the use of individual sureties for bid, payment and performance bonds. However, the conditions that must be met are strict, and they may not be waived. Further, the FAR imposes limits with respect to the type of property interest individual sureties may utilize.

Individual sureties have been occasionally and successfully used in accordance with FAR requirements within the San Francisco District, when real property interests have not been provided as the security interest. On at least one occasion, an individual surety was made acceptable when an individual personally known to a bidder provided a business property for the security interest, and legal counsel was engaged to navigate and implement the FAR requirements.

Bidders or proposers considering utilizing individuals or firms providing “brokerage” or “insurance” services to obtain bonds from individual sureties are advised to carefully research their backgrounds. The Government is not responsible for and will not reimburse any bidder for advance payments made to such firms in the event that the bonds are unacceptable to the contracting officer.

The San Francisco District strictly follows the FAR 28.203 “Acceptability of individual sureties.” Frequently, an individual surety’s bid bond raises questions about the real property security interest being offered. Also, individual sureties may use “altered” Standard Form 28 affidavits, which are unacceptable. Documentation containing such flaws will result in rejection of the bonds, and, if it is a bid bond, rejection of the bid.

Some “brokers” apparently represent that “their bonds” are accepted by federal government entities. Yet, be aware that not all federal agencies implement the FAR in a uniform manner. Insufficiencies that go unnoticed by one agency may be perceived as fatal by another. The risk of such results rests with the bidder offering the bid bond.

Know your broker, and ensure that all bonding documents comply with FAR requirements before you submit them. It is important to remember that the contracting officer is vested with a wide degree of discretion and business judgment in determining the acceptability of an individual surety, and the Comptroller General has stated that he will not question such a determination so long as it is reasonable.

So, please make certain that if you intend to use an individual surety you are familiar with the regulations and specific requirements that apply to this form of bonding.

CONFORMED

TABLE OF CONTENTS

COVER SHEET
TABLE OF CONTENTS

SECTION	TITLE
SOLICIATION	SOLICITATION, OFFER AND AWARD (STANDARD FORM 1442) (CONTINUATION STANDARD FROM 1442)
00 00 10	PRICING SCHEDULE
00 21 00	INSTRUCTIONS, CONDITIONS AND NOTICES TO BIDDERS/ OFFERORS AND EVALUATION CRITERIA FOR AWARD
00 45 00	REPRESENTATIONS, CERTIFICATIONS AND OTHER STATEMENTS OF BIDDERS/OFFERORS
00 72 00	CONTRACT CLAUSES
00 73 00	SPECIAL CONTRACT REQUIREMENTS

ATTACHMENTS

1	GENERAL WAGE DETERMINATION
2	PREAWARD SURVEY

TECHNICAL SPECIFICATIONS

(SEE TECHNICAL SPECIFICATIONS' TABLE OF CONTENTS FOR SPECIFICATION SECTIONS INCLUDED IN THIS SOLICITATION/CONTRACT)

DRAWINGS (SEPARATE PACKAGE)

NOTE: AS A MINIMUM ANY CONTRACT AWARDED AS A RESULT OF THIS SOLICITATION SHALL CONSIST OF THE FOLLOWING DOCUMENTS:

STANDARD FORM 1442, SECTIONS 00 00 10, 00 72 00, 00 73 00, TECHNICAL SPECIFICATIONS AND DRAWINGS, AND ATTACHMENTS AS DESCRIBED IN CONTRACT DOCUMENT.

SECTION 00 45 00, AS COMPLETED BY AWARDEE, IS INCORPORATED INTO ANY RESULTANT CONTRACT BY REFERENCE.

SECTION 00 21 00 IS INCLUDED FOR SOLICITATION PURPOSES ONLY. THIS SECTION WILL BE REMOVED, MAINTAINED IN THE CONTRACT FILE AND NOT MADE PART OF THE CONTRACT.

AMENDMENTS ARE INCORPORATED INTO THE RESULTANT CONTRACT.

SUBCONTRACTING PLAN (IF REQUIRED) BECOMES AN ATTACHMENT TO AND A MATERIAL PART OF THE CONTRACT.

CONFORMED

SOLICITATION, OFFER, AND AWARD *(Construction, Alteration, or Repair)*	1. SOLICITATION NO. W912P7-16-B-0007	2. TYPE OF SOLICITATION [X] SEALED BID (IFB) [ ] NEGOTIATED *(RFP)*	3. DATE ISSUED 9-Jun-2016	PAGE OF PAGES 1 OF 103

IMPORTANT - The "offer" section on the reverse must be fully completed by offeror.

4. CONTRACT NO.	5. REQUISITION/PURCHASE REQUEST NO.	6. PROJECT NO.
W912P7-16-C-0008		

7. ISSUED BY CODE W912P7	8. ADDRESS OFFER TO *(If Other Than Item 7)* CODE
US ARMY ENGINEER DISTRICT, SAN FRANCISCO CONTRACTING DIVISION 1455 MARKET ST., 17TH FLOOR SUITE 1741 SAN FRANCISCO CA 94103-1398 TEL: FAX:	**See Item 7** TEL: FAX:

9. FOR INFORMATION CALL:	A. NAME	B. TELEPHONE NO. *(Include area code)* *(NO COLLECT CALLS)*
	JAMES E GARROR	415-503-6988

SOLICITATION

NOTE: In sealed bid solicitations "offer" and "offeror" mean "bid" and "bidder".

10. THE GOVERNMENT REQUIRES PERFORMANCE OF THE WORK DESCRIBED IN THESE DOCUMENTS *(Title, identifying no., date):*

BERRYESSA FLOOD CONTROL CHANNEL IMPROVEMENT PROJECT, MILPITAS, SANTA CLARA COUNTY, CALIFORNIA.

JOB DESCRIPTION: The work includes construction of an earthen trapezoidal channel section with varying bottom width and 2H:1V side slopes and placement of rip-rap and geotextiles mats. Concrete floodwalls would be constructed within the west bank of the channel Downstream of Yosemite Drive, and within the west bank upstream of Montague Expressway. An access road would be located along the east and west banks of the channel. Transition structures at Montague Expressway, UPRR culvert, Los Coches Street, and Calaveras Boulevard would be constructed. Transition structures (with variable sloping wing walls) would extend for 50 to 75 feet upstream or downstream of the bridge face. *In order to meet time sensitive UPRR operations, the existing UPRR trestle would be demolished and replaced with a pre-cast double barrel concrete box culvert within a 60 hour time frame following coordination with UPRR. UPRR will replace the track bed and tracks. Non time sensitive Box culvert extensions will be placed at two tributary crossings.*

This requirement is for SMALL BUSINESS competition. It will be issued as an invitation for bid (IFB) which will result in the award of a single Firm Fixed Price (FFP) contract.

The North American Industry Classification System (NAICS) Code applicable to this acquisition is 237990.

ESTIMATED COST RANGE IS BETWEEN: $10,000,000 - $25,000,000

11. The Contractor shall begin performance within 5 calendar days and complete it within 470 calendar days after receiving [ ] award, [X] notice to proceed. This performance period is [ ] mandatory, [ ] negotiable. *(See* 52.211-10 *.)*

12 A. THE CONTRACTOR MUST FURNISH ANY REQUIRED PERFORMANCE AND PAYMENT BONDS? *(If "YES," indicate within how many calendar days after award in Item 12B.)* [X] YES [ ] NO	12B. CALENDAR DAYS 5

13. ADDITIONAL SOLICITATION REQUIREMENTS:

A. Sealed offers in original and 1 copies to perform the work required are due at the place specified in Item 8 by 1:00 PM *(hour)* local time **26 July 2016** *(date)*. If this is a sealed bid solicitation, offers must be publicly opened at that time. Sealed envelopes containing offers shall be marked to show the offeror's name and address, the solicitation number, and the date and time offers are due.

B. An offer guarantee [X] is, [ ] is not required.

C. All offers are subject to the (1) work requirements, and (2) other provisions and clauses incorporated in the solicitation in full text or by reference.

D. Offers providing less than 60 calendar days for Government acceptance after the date offers are due will not be considered and will be rejected.

CONFORMED

SOLICITATION, OFFER, AND AWARD (Continued)

(Construction, Alteration, or Repair)

OFFER ***(Must be fully completed by offeror)***

14. NAME AND ADDRESS OF OFFEROR *(Include ZIP Code)*	15. TELEPHONE NO. *(Include area code)* 707-427-3209
Suulutaaq, Inc. 110 Railroad Ave., Suite A Suisun City, CA 94585 DUNS No. 028684096 / CAGE No. 6E9D1	16. REMITTANCE ADDRESS *(Include only if different than Item 14)* Refer to Box 14
CODE / FACILITY CODE	

17. The offeror agrees to perform the work required at the prices specified below in strict accordance with the terms of this solicitation, if this offer is accepted by the Government in writing within 60 calendar days after the date offers are due. *(Insert any number equal to or greater than the minimum requirements stated in Item 13D. Failure to insert any number means the offeror accepts the minimum in Item 13D.)*

AMOUNTS	SEE SCHEDULE OF PRICES

18. The offeror agrees to furnish any required performance and payment bonds.

19. ACKNOWLEDGMENT OF AMENDMENTS

(The offeror acknowledges receipt of amendments to the solicitation -- give number and date of each)

AMENDMENT NO.	1	2	3							
DATE	7/10/16	7/12/16	7/19/16							

20A. NAME AND TITLE OF PERSON AUTHORIZED TO SIGN OFFER *(Type or print)* Lane Baker, General Manager	20B. SIGNATURE	20C. OFFER DATE 7/26/2016

AWARD ***(To be completed by Government)***

21. ITEMS ACCEPTED:
Line Items 0001 - 0025, 0027, 0028

22. AMOUNT	23. ACCOUNTING AND APPROPRIATION DATA
$18,361,020.00	See attached continuation page 2A

24. SUBMIT INVOICES TO ADDRESS SHOWN IN *(4 copies unless otherwise specified)*	ITEM	25. OTHER THAN FULL AND OPEN COMPETITION PURSUANT TO
	Block 26	☐ 10 U.S.C. 2304(c) ☐ 41 U.S.C. 253(c)

26. ADMINISTERED BY CODE W912P7	27. PAYMENT WILL BE MADE BY: CODE
USACE Construction Services Branch San Francisco District 2100 Bridgeway Drive Sausalito, CA 94965	USAED, SF District/South Pacific Division C/O USACE Finance CTR 5720 Integrity Drive Millington, TN 38054-5005

CONTRACTING OFFICER WILL COMPLETE ITEM 28 OR 29 AS APPLICABLE

☐ 28. NEGOTIATED AGREEMENT *(Contractor is required to sign this document and return _____ copies to issuing office.)* Contractor agrees to furnish and deliver all items or perform all work, requisitions identified on this form and any continuation sheets for the consideration stated in this contract. The rights and obligations of the parties to this contract shall be governed by (a) this contract award, (b) the solicitation, and (c) the clauses, representations, certifications, and specifications or incorporated by reference in or attached to this contract.

☒ 29. AWARD *(Contractor is not required to sign this document.)* Your offer on this solicitation, is hereby accepted as to the items listed. This award consummates the contract, which consists of (a) the Government solicitation and your offer, and (b) this contract award. No further contractual document is necessary.

30A. NAME AND TITLE OF CONTRACTOR OR PERSON AUTHORIZED TO SIGN *(Type or print)*	31A. NAME OF CONTRACTING OFFICER *(Type or print)* Linda F. Hales TEL: EMAIL: Linda.F.Hales@usace.army.mil
30B. SIGNATURE / 30C. DATE	31B. UNITED STATES OF AMERICA BY / 31C. AWARD DATE

CONFORMED

Continuation SF 1442 page 2A

ACCOUNTING CLASSIFICATION AND AMOUNT

W62A2B621092800001
096 NA X 2016 3122 000 0000 CCS: 511 L3 2016 08 2452 012504 96043 2520 3BG29G NA 32G3J3
$1,280,000.00

W62A2B621092800002
096 NA X 2016 3122 000 0000 CCS: 511 L3 2016 08 2452 012504 96043 2520 3BG29G NA 32G3J3
$2,265,103.00

W62A2B621092800003
096 NA X 2016 3122 000 0000 CCS: 511 L3 2016 08 2452 012504 96043 2520 3BG29G NA 32G3J3
$3,911,000.00

W62A2B621092800004
096 NA X 2016 3122 000 0000 CCS: 511 L3 2016 08 2452 012504 96043 2520 3BG29G NA 32G3J3
$643,000.00

W62A2B621092800005
096 NA X 2016 3122 000 0000 CCS: 511 L3 2016 08 2452 012504 96043 2520 3BG29G NA 32G3J3
$515,000.00

W62A2B621092800006
096 NA X 2016 3122 000 0000 CCS: 511 L3 2016 08 2452 012504 96043 2520 3BG29G NA 32G3J3
$1,419,000.00

W62A2B621092800007
096 NA X 2016 3122 000 0000 CCS: 511 L3 2016 08 2452 012504 96043 2520 3BG29G NA 32G3J3
$211,000.00

W62A2B621092800008
096 NA X 2016 3122 000 0000 CCS: 511 L3 2016 08 2452 012504 96043 2520 3BG29G NA 32G3J3
$47,000.00

W62A2B621092800009
096 NA X 2016 3122 000 0000 CCS: 511 L3 2016 08 2452 012504 96043 2520 3BG29G NA 32G3J3
$927,000.00

W62A2B621092800010
096 NA X 2016 3122 000 0000 CCS: 511 L3 2016 08 2452 012504 96043 2520 3BG29G NA 32G3J3
$15,500.00

W62A2B621092800011
096 NA X 2016 3122 000 0000 CCS: 511 L3 2016 08 2452 012504 96043 2520 3BG29G NA 32G3J3
$258,000.00

W62A2B621092800012
096 NA X 2016 3122 000 0000 CCS: 511 L3 2016 08 2452 012504 96043 2520 3BG29G NA 32G3J3
$106,000.00

W62A2B621092800013
096 NA X 2016 3122 000 0000 CCS: 511 L3 2016 08 2452 012504 96043 2520 3BG29G NA 32G3J3
$21,500.00

CONFORMED

Continuation SF 1442 page 2A

ACCOUNTING CLASSIFICATION AND AMOUNT

W62A2B621092800014
096 NA X 2016 3122 000 0000 CCS: 511 L3 2016 08 2452 012504 96043 2520 3BG29G NA 32G3J3
$11,620.00

W62A2B621092800015
096 NA X 2016 3122 000 0000 CCS: 511 L3 2016 08 2452 012504 96043 2520 3BG29G NA 32G3J3
$306,000.00

W62A2B621092800016
096 NA X 2016 3122 000 0000 CCS: 511 L3 2016 08 2452 012504 96043 2520 3BG29G NA 32G3J3
$71,000.00

W62A2B621092800017
096 NA X 2016 3122 000 0000 CCS: 511 L3 2016 08 2452 012504 96043 2520 3BG29G NA 32G3J3
$40,500.00

W62A2B621092800018
096 NA X 2016 3122 000 0000 CCS: 511 L3 2016 08 2452 012504 96043 2520 3BG29G NA 32G3J3
$992,147.00

W62A2B621092800019
096 NA X 2016 3122 000 0000 CCS: 511 L3 2016 08 2452 012504 96043 2520 3BG29G NA 32G3J3
$31,500.00

W62A2B621092800020
096 NA X 2016 3122 000 0000 CCS: 511 L3 2016 08 2452 012504 96043 2520 3BG29G NA 32G3J3
$590,000.00

W62A2B621092800021
096 NA X 2016 3122 000 0000 CCS: 511 L3 2016 08 2452 012504 96043 2520 3BG29G NA 32G3J3
$474,100.00

W62A2B621092800022
096 NA X 2016 3122 000 0000 CCS: 511 L3 2016 08 2452 012504 96043 2520 3BG29G NA 32G3J3
$36,200.00

W62A2B621092800023
096 NA X 2016 3122 000 0000 CCS: 511 L3 2016 08 2452 012504 96043 2520 3BG29G NA 32G3J3
$75,600.00

W62A2B621092800024
096 NA X 2016 3122 000 0000 CCS: 511 L3 2016 08 2452 012504 96043 2520 3BG29G NA 32G3J3
$28,200.00

CONFORMED

Continuation SF 1442 page 2A

ACCOUNTING CLASSIFICATION AND AMOUNT

W62A2B621092800025
096 NA X 2016 3122 000 0000 CCS: 511 L3 2016 08 2452 012504 96043 2520 3BG29G NA 32G3J3
$40,000.00

W62A2B6210928300027
096 NA X X 8862 000 0000 CCS: 511 L3 X 08 2452 012504 96043 2520 37D380 NA 316L60 -
$217,100.00

W62A2B621092830028
096 NA X X 8862 000 0000 CCS: 511 L3 X 08 2452 012504 96043 2520 37D380 NA 316L60 –
$68,200.00

W62A2B621092830002
096 NA X X 8862 000 0000 CCS: 511 L3 X 08 2452 012504 96043 2520 37D380 NA 316L60 -
$3,134,897.00

W62A2B621092830018
096 NA X X 8862 000 0000 CCS: 511 L3 X 08 2452 012504 96043 2520 37D380 NA 316L60 -
$624,853.00

CONFORMED

CONTINUATION OF STANDARD FORM 1442

CORPORATION AUTHORIZATION CERTIFICATE

I, Race McCleery (name), certify that I am the Secretary of the corporation named as offeror in the within offer; that Lane Baker (name), who signed said offer on behalf of the corporation, was then General Manager (title) of said corporation, that the signature thereto is genuine; that said contract was duly signed, sealed and attested for in behalf of said corporation by authority of its governing body.

Suulutaaq, Inc.
(Name of Corporation)

(Secretary)

N/A (4) IF THE OFFEROR IS AN INDIVIDUAL DOING BUSINESS AS A FIRM, THE OFFER SHALL BE SIGNED BY THAT INDIVIDUAL IN BLOCK 20B FOLLOWED BY THE WORDS "AN INDIVIDUAL DOING BUSINESS AS _____ (INSERT NAME OF FIRM).

(5) WHEN AN AGENT SIGNS THE OFFER, PROVIDE PROOF OF THE AGENT'S AUTHORITY TO BIND THE PRINCIPAL.

see attached

CONFORMED

SUULUTAAQ, INC.

Date: July 19, 2016

Reference: Evidence of Authorization

To Whom It May Concern:

Pursuant to Suulutaaq, Inc. revised Bylaws dated 30 September 2014, I, Sam Boyle, Chairman of the Board hereby delegate and certify that Lane Baker is the General Manager of Suulutaaq, Inc., and he is vested with the authority to execute and deliver both the Proposal and Contract for any referenced projects.

Sincerely,

Samuel Boyle
Chairman of the Board

Subscribed and sworn to before me this 19th day of July, 2016

Notary Public in and for the State of Alaska

My Commission Expires: 5-5-20

STATE OF ALASKA
NOTARY PUBLIC
Winona Beesing
My Commission Expires: May 5, 2020

CONFORMED

A Subsidiary of
The Kuskokwim Corporation
An Equal Opportunity Employer

4300 B Street, Suite 205
P: 907.375.9744
F: 907.375.9322
www.suulutaaq.com

AMENDMENT OF SOLICITATION/MODIFICATION OF CONTRACT

1. CONTRACT ID CODE	PAGE OF PAGES
J	1 / 54

2. AMENDMENT/MODIFICATION NO.	3. EFFECTIVE DATE	4. REQUISITION/PURCHASE REQ. NO.	5. PROJECT NO.(If applicable)
0001	08-Jul-2016		

6. ISSUED BY CODE W912P7

US ARMY ENGINEER DISTRICT, SAN FRANCISCO
CONTRACTING DIVISION
1455 MARKET ST., 17TH FLOOR SUITE 1741
SAN FRANCISCO CA 94103-1398

7. ADMINISTERED BY (If other than item 6) CODE

See Item 6

8. NAME AND ADDRESS OF CONTRACTOR (No., Street, County, State and Zip Code)

Suulutaaq, Inc.
110 Railroad Avenue, Suite A
Suisun City, CA 94585

CODE FACILITY CODE

X	9A. AMENDMENT OF SOLICITATION NO. W912P7-16-B-0007
X	9B. DATED (SEE ITEM 11) 10-Jun-2016
	10A. MOD. OF CONTRACT/ORDER NO.
	10B. DATED (SEE ITEM 13)

11. THIS ITEM ONLY APPLIES TO AMENDMENTS OF SOLICITATIONS

[X] The above numbered solicitation is amended as set forth in Item 14. The hour and date specified for receipt of Offer [X] is extended, [ ] is not extended.

Offer must acknowledge receipt of this amendment prior to the hour and date specified in the solicitation or as amended by one of the following methods: (a) By completing Items 8 and 15, and returning 1 copies of the amendment; (b) By acknowledging receipt of this amendment on each copy of the offer submitted; or (c) By separate letter or telegram which includes a reference to the solicitation and amendment numbers. FAILURE OF YOUR ACKNOWLEDGMENT TO BE RECEIVED AT THE PLACE DESIGNATED FOR THE RECEIPT OF OFFERS PRIOR TO THE HOUR AND DATE SPECIFIED MAY RESULT IN REJECTION OF YOUR OFFER. If by virtue of this amendment you desire to change an offer already submitted, such change may be made by telegram or letter, provided each telegram or letter makes reference to the solicitation and this amendment, and is received prior to the opening hour and date specified.

12. ACCOUNTING AND APPROPRIATION DATA (If required)

13. THIS ITEM APPLIES ONLY TO MODIFICATIONS OF CONTRACTS/ORDERS. IT MODIFIES THE CONTRACT/ORDER NO. AS DESCRIBED IN ITEM 14.

A. THIS CHANGE ORDER IS ISSUED PURSUANT TO: (Specify authority) THE CHANGES SET FORTH IN ITEM 14 ARE MADE IN THE CONTRACT ORDER NO. IN ITEM 10A.

B. THE ABOVE NUMBERED CONTRACT/ORDER IS MODIFIED TO REFLECT THE ADMINISTRATIVE CHANGES (such as changes in paying office, appropriation date, etc.) SET FORTH IN ITEM 14, PURSUANT TO THE AUTHORITY OF FAR 43.103(B).

C. THIS SUPPLEMENTAL AGREEMENT IS ENTERED INTO PURSUANT TO AUTHORITY OF:

D. OTHER (Specify type of modification and authority)

E. IMPORTANT: Contractor [ ] is not, [ ] is required to sign this document and return _____ copies to the issuing office.

14. DESCRIPTION OF AMENDMENT/MODIFICATION (Organized by UCF section headings, including solicitation/contract subject matter where feasible.)

BERRYESSA FLOOD CONTROL CHANNEL IMPROVEMENT PROJECT, MILPITAS, SANTA CLARA COUNTY, CALIFORNIA.

BID OPENING DATE HAS BEEN POSTPONED TO 13 JULY 2016

ENCL) SF1442 PAGES 1 AND 2, SECTION 00 72 00 PAGE 17, SECTION 00 73 00 ATTACHMENT 1 WAGE DETERMINATION REVISED DATED 7/8/2016.

Except as provided herein, all terms and conditions of the document referenced in Item 9A or 10A, as heretofore changed, remains unchanged and in full force and effect.

15A. NAME AND TITLE OF SIGNER (Type or print)		16A. NAME AND TITLE OF CONTRACTING OFFICER (Type or print)	
Lane Baker, General Manager		TEL: EMAIL:	
15B. CONTRACTOR/OFFEROR (Signature of person authorized to sign)	15C. DATE SIGNED July 12, 2016	16B. UNITED STATES OF AMERICA BY (Signature of Contracting Officer)	16C. DATE SIGNED

EXCEPTION TO SF 30
APPROVED BY OIRM 11-84

30-105-04

STANDARD FORM 30 (Rev. 10-83)
Prescribed by GSA
FAR (48 CFR) 53.243

CONFORMED

AMENDMENT OF SOLICITATION/MODIFICATION OF CONTRACT

1. CONTRACT ID CODE	PAGE OF PAGES	
J	1	68

2. AMENDMENT/MODIFICATION NO.	3. EFFECTIVE DATE	4. REQUISITION/PURCHASE REQ. NO.	5. PROJECT NO.(If applicable)
0002	12-Jul-2016		

6. ISSUED BY CODE W912P7

US ARMY ENGINEER DISTRICT, SAN FRANCISCO
CONTRACTING DIVISION
1455 MARKET ST., 17TH FLOOR SUITE 1741
SAN FRANCISCO CA 94103-1398

7. ADMINISTERED BY (If other than item 6) CODE

See Item 6

8. NAME AND ADDRESS OF CONTRACTOR (No., Street, County, State and Zip Code)

Suulutaaq, Inc.
110 Railroad Avenue, Suite A
Suisun City, CA 94585

CODE FACILITY CODE

X	9A. AMENDMENT OF SOLICITATION NO. W912P7-16-B-0007
X	9B. DATED (SEE ITEM 11) 10-Jun-2016
	10A. MOD. OF CONTRACT/ORDER NO.
	10B. DATED (SEE ITEM 13)

11. THIS ITEM ONLY APPLIES TO AMENDMENTS OF SOLICITATIONS

[X] The above numbered solicitation is amended as set forth in Item 14. The hour and date specified for receipt of Offer [X] is extended, [ ] is not extended.

Offer must acknowledge receipt of this amendment prior to the hour and date specified in the solicitation or as amended by one of the following methods: (a) By completing Items 8 and 15, and returning 1 copies of the amendment; (b) By acknowledging receipt of this amendment on each copy of the offer submitted; or (c) By separate letter or telegram which includes a reference to the solicitation and amendment numbers. FAILURE OF YOUR ACKNOWLEDGMENT TO BE RECEIVED AT THE PLACE DESIGNATED FOR THE RECEIPT OF OFFERS PRIOR TO THE HOUR AND DATE SPECIFIED MAY RESULT IN REJECTION OF YOUR OFFER. If by virtue of this amendment you desire to change an offer already submitted, such change may be made by telegram or letter, provided each telegram or letter makes reference to the solicitation and this amendment, and is received prior to the opening hour and date specified.

12. ACCOUNTING AND APPROPRIATION DATA (If required)

13. THIS ITEM APPLIES ONLY TO MODIFICATIONS OF CONTRACTS/ORDERS. IT MODIFIES THE CONTRACT/ORDER NO. AS DESCRIBED IN ITEM 14.

[ ] A. THIS CHANGE ORDER IS ISSUED PURSUANT TO: (Specify authority) THE CHANGES SET FORTH IN ITEM 14 ARE MADE IN THE CONTRACT ORDER NO. IN ITEM 10A.

[ ] B. THE ABOVE NUMBERED CONTRACT/ORDER IS MODIFIED TO REFLECT THE ADMINISTRATIVE CHANGES (such as changes in paying office, appropriation date, etc.) SET FORTH IN ITEM 14, PURSUANT TO THE AUTHORITY OF FAR 43.103(B).

[ ] C. THIS SUPPLEMENTAL AGREEMENT IS ENTERED INTO PURSUANT TO AUTHORITY OF:

[ ] D. OTHER (Specify type of modification and authority)

E. IMPORTANT: Contractor [ ] is not, [ ] is required to sign this document and return _____ copies to the issuing office.

14. DESCRIPTION OF AMENDMENT/MODIFICATION (Organized by UCF section headings, including solicitation/contract subject matter where feasible.)

BERRYESSA FLOOD CONTROL CHANNEL IMPROVEMENT PROJECT, MILPITAS, SANTA CLARA COUNTY, CALIFORNIA.

BID OPENING DATE HAS BEEN POSTPONED TO 25 JULY 2016

ENCL) SF1442 PAGES 1 AND 2, Section 01 22 00.00, Section 31 32 11 Soil Surface Erosion Control, Section 32 31 13 Chain Link Fence and Gates, Section 33 40 00 Storm Drainage Utilities, Section 34 11 00 Railroad Track and Accessories, Drawings Sheet G-07, Sheet C-100, Sheet C-102, Sheet C-107, Sheet C-108, Sheet C-109, Sheet C-110, Sheet C-111, Sheet C-112, Sheet C-201, Sheet C-211 to C-213, Sheet C-301, Sheet C-305, Sheet C-306, Sheet C-307, Sheet C-308, Sheet S-102, Sheet S-104, Sheet RP-02 and RP-03, Sheet SR-100

Except as provided herein, all terms and conditions of the document referenced in Item 9A or 10A, as heretofore changed, remains unchanged and in full force and effect.

15A. NAME AND TITLE OF SIGNER (Type or print)		16A. NAME AND TITLE OF CONTRACTING OFFICER (Type or print)	
Lane Baker, General Manager		TEL: EMAIL:	
15B. CONTRACTOR/OFFEROR (Signature of person authorized to sign)	15C. DATE SIGNED 7/14/2016	16B. UNITED STATES OF AMERICA BY (Signature of Contracting Officer)	16C. DATE SIGNED

CONFORMED

EXCEPTION TO SF 30
APPROVED BY OIRM 11-84

30-105-04

STANDARD FORM 30 (Rev. 10-83)
Prescribed by GSA
FAR (48 CFR) 53.243

AMENDMENT OF SOLICITATION/MODIFICATION OF CONTRACT

1. CONTRACT ID CODE	PAGE OF PAGES
J	1 | 48

2. AMENDMENT/MODIFICATION NO.	3. EFFECTIVE DATE	4. REQUISITION/PURCHASE REQ. NO.	5. PROJECT NO.(If applicable)
0003	19-Jul-2016		

6. ISSUED BY CODE W912P7

US ARMY ENGINEER DISTRICT, SAN FRANCISCO
CONTRACTING DIVISION
1455 MARKET ST., 17TH FLOOR SUITE 1741
SAN FRANCISCO CA 94103-1398

7. ADMINISTERED BY (If other than item 6) CODE

See Item 6

8. NAME AND ADDRESS OF CONTRACTOR (No., Street, County, State and Zip Code)

Suulutaaq, Inc.
110 Railroad Ave., Suite A
Suisun City, CA 94585

CODE FACILITY CODE

X	9A. AMENDMENT OF SOLICITATION NO. W912P7-16-B-0007
X	9B. DATED (SEE ITEM 11) 10-Jun-2016
	10A. MOD. OF CONTRACT/ORDER NO.
	10B. DATED (SEE ITEM 13)

11. THIS ITEM ONLY APPLIES TO AMENDMENTS OF SOLICITATIONS

[X] The above numbered solicitation is amended as set forth in Item 14. The hour and date specified for receipt of Offer [X] is extended, [ ] is not extended.

Offer must acknowledge receipt of this amendment prior to the hour and date specified in the solicitation or as amended by one of the following methods: (a) By completing Items 8 and 15, and returning 1 copies of the amendment; (b) By acknowledging receipt of this amendment on each copy of the offer submitted; or (c) By separate letter or telegram which includes a reference to the solicitation and amendment numbers. FAILURE OF YOUR ACKNOWLEDGMENT TO BE RECEIVED AT THE PLACE DESIGNATED FOR THE RECEIPT OF OFFERS PRIOR TO THE HOUR AND DATE SPECIFIED MAY RESULT IN REJECTION OF YOUR OFFER. If by virtue of this amendment you desire to change an offer already submitted, such change may be made by telegram or letter, provided each telegram or letter makes reference to the solicitation and this amendment, and is received prior to the opening hour and date specified.

12. ACCOUNTING AND APPROPRIATION DATA (If required)

13. THIS ITEM APPLIES ONLY TO MODIFICATIONS OF CONTRACTS/ORDERS. IT MODIFIES THE CONTRACT/ORDER NO. AS DESCRIBED IN ITEM 14.

A. THIS CHANGE ORDER IS ISSUED PURSUANT TO: (Specify authority) THE CHANGES SET FORTH IN ITEM 14 ARE MADE IN THE CONTRACT ORDER NO. IN ITEM 10A.

B. THE ABOVE NUMBERED CONTRACT/ORDER IS MODIFIED TO REFLECT THE ADMINISTRATIVE CHANGES (such as changes in paying office, appropriation date, etc.) SET FORTH IN ITEM 14, PURSUANT TO THE AUTHORITY OF FAR 43.103(B).

C. THIS SUPPLEMENTAL AGREEMENT IS ENTERED INTO PURSUANT TO AUTHORITY OF:

D. OTHER (Specify type of modification and authority)

E. IMPORTANT: Contractor [ ] is not, [ ] is required to sign this document and return _____ copies to the issuing office.

14. DESCRIPTION OF AMENDMENT/MODIFICATION (Organized by UCF section headings, including solicitation/contract subject matter where feasible.)

BERRYESSA FLOOD CONTROL CHANNEL IMPROVEMENT PROJECT, MILPITAS, SANTA CLARA COUNTY, CALIFORNIA.

BID OPENING DATE HAS BEEN POSTPONED TO 26 JULY 2016.

ENCL) SF1442 PAGES 1 AND 2, Pricing Schedule Section 00 00 10, Spec 01 33 00 Submittal Procedures, Spec 34 11 00 Railroad Track and Accessories, Appendix Table of Contents, Appendix L Public Entities Indemnification and Insurance - Contractor - Construction Risk

Except as provided herein, all terms and conditions of the document referenced in Item 9A or 10A, as heretofore changed, remains unchanged and in full force and effect.

15A. NAME AND TITLE OF SIGNER (Type or print)		16A. NAME AND TITLE OF CONTRACTING OFFICER (Type or print)	
Lane Baker, General Manager		TEL: EMAIL:	
15B. CONTRACTOR/OFFEROR (Signature of person authorized to sign)	15C. DATE SIGNED 7/26/2016	16B. UNITED STATES OF AMERICA BY (Signature of Contracting Officer)	16C. DATE SIGNED

CONFORMED

SECTION 00 00 10
PRICING SCHEDULES

THE CONTRACTOR SHALL FURNISH ALL PLANT, LABOR, MATERIAL, EQUIPMENT, ETC., NECESSARY TO PERFORM ALL WORK IN STRICT ACCORDANCE WITH THE TERMS AND CONDITIONS SET FORTH IN THE CONTRACT TO INCLUDE ALL ATTACHMENTS THERETO.

BASE
Sta. 87+21.43 to Sta. 154+00 and Sta. 164+92.98 to Sta. 199+22.28

Item	Description	Estimated Quantity	Unit	Unit Price	Amount
0001	Clearing and Grubbing, Demolition, and Control of Water	1	JOB	$ 1,280,000.00	$ 1,280,000.00
0002	Earthwork	1	JOB	$ 5,400,000.00	$ 5,400,000.00
0003	Riprap Revetment and Erosion Control	1	JOB	$ 3,911,000.00	$ 3,911,000.00
0004	RC Floodwall	1	JOB	$ 643,000.00	$ 643,000.00
0005	14'W x 6'H RCB	1	JOB	$ 515,000.00	$ 515,000.00
0006	RC Channel and Transition Structures	1	JOB	$ 1,419,000.00	$ 1,419,000.00
0007	18" to 36" RCP Drain and Outlet Structures	1	JOB	$ 211,000.00	$ 211,000.00
0008	Demo of UPRR Piedmont Bridge	1	JOB	$ 47,000.00	$ 47,000.00
0009	Access Road	1	JOB	$ 927,000.00	$ 927,000.00
0010	Crane Pads	1	JOB	$ 15,500.00	$ 15,500.00
0011	Chainlink Fence and Gates	1	JOB	$ 258,000.00	$ 258,000.00
0012	Concrete Down Ramp	1	JOB	$ 106,000.00	$ 106,000.00
0013	Driveway Entrance	1	JOB	$ 21,500.00	$ 21,500.00
0014	Manhole Grade Adjustment	14	EA	$ 830.00	$ 11,620.00
0015	Wetland/Upland Hydro Seed	1	JOB	$ 306,000.00	$ 306,000.00
				Total Amount:	$ 15,071,620.00
0028	**Public Entities Indemnification and Insurance**	**1**	**JOB**	**$ 68,200.00**	**$ 68,200.00**
				Total Amount:	**$ 68,200.00**

CONFORMED

OPTION 1
Sta. 154+00 to Sta. 164+92.98

Item	Description	Estimated Quantity	Unit	Unit Price	Amount
0016	Clearing and Grubbing, Demolition, and Control of Water	1	JOB	$ 71,000.00	$ 71,000.00
0017	Demo of UPRR Spurline Bridge	1	JOB	$ 40,500.00	$ 40,500.00
0018	Precast RCB - UPRR	1	JOB	$ 1,617,000.00	$ 1,617,000.00
0019	UPRR Railway Construction and Transition	1	JOB	$ 31,500.00	$ 31,500.00
0020	Earthwork	1	JOB	$ 590,000.00	$ 590,000.00
0021	Riprap Revetment and Erosion Control Blankets	1	JOB	$ 474,100.00	$ 474,100.00
0022	18" to 36" RCP Drain and Outlet Structures	1	JOB	$ 36,200.00	$ 36,200.00
0023	Access Roads	1	JOB	$ 75,600.00	$ 75,600.00
0024	Chainlink Fence and Gates	1	JOB	$ 28,200.00	$ 28,200.00
0025	Wetland/Upland Hydro Seed	1	JOB	$ 40,000.00	$ 40,000.00
				Total Amount:	$ 3,004,[illegible]00.00

OPTION 2
Sta. 155+75.00 to Sta. 164+92.98

Item	Description	Estimated Quantity	Unit	Unit Price	Amount
0026	Treatment of Contaminated Groundwater	1	JOB	$ 392,000.00	$ 392,000.00
				Total Amount:	$ 392,000.00

CONFORMED

OPTION 3
Sta. 87+21.43 to Sta. 199+22.28

Item	Description	Estimated Quantity	Unit	Unit Price	Amount
0027	Check Valves	1	JOB	$ 217,100.00	$ 217,100.00
				Total Amount:	$ 217,100.00

Total Evaluated Price Base: (Line Items 0001 thru 0015+ **0028**)	$ 15,139,820.00
Total Evaluated Price Option 1: (Line Items 0016 thru 0025)	$ 3,004,100.00
Total Evaluated Price Option 2: (Line Item 0026)	$ 392,000.00
Total Evaluated Price Option 3: (Line Item 0027)	$ 217,100.00
Total Evaluated Price Base, Option 1, Option 2, Option 3:	$ 18,753,020.00

CONFORMED

NOTES:

*QUANTITY IS AN ESTIMATED AMOUNT, SEE SECTION 00 72 00, FAR 52.211-18.

1. To be considered responsive, prices must be submitted on all individual bid items of this Pricing Schedule. Failure to do so may be cause for rejection of bids. **If an individual bid item rice is zero dollars ($0.00), a zero amount ($0.00) shall be entered as the price for the individual bid item**

2. If a modification to a price based on unit price is submitted which provides for a lump sum adjustment to the total estimated price, the applications of the lump sum adjustment to each unit price in the Pricing Schedule must be stated. If it is not stated, the bidder/offeror agrees that the lump sum adjustment shall be applied on a pro rata basis to every unit price in the Pricing Schedule.

3. The bidder/offeror shall distribute his other indirect costs (overhead, bond, etc.) and profit over all the items in the Bid Schedule. The Government will review all submitted Bid Schedules for any unbalancing of the items. Any submitted Bid Schedule determined to be unbalanced may cause the proposal to be determined "unacceptable".

4. The term “JOB”, which appears on the Pricing Schedule(Section 00 00 10) under “Unit” for BASE Line Items 0001 thru 0013 and 0015, OPTION 1 Line Items 0016 thru 0025), OPTION 2 Line Item 0026 and OPTION 3 Line Item 0027, **and Line Item 0028**. The Variation in Estimated Quantities contract clause, FAR 52.211- 18, shall not apply to BASE Line Items 0001 thru 0013 and 0015, OPTION 1 Line Items 0016 thru 0025, OPTION 2 Line Item 0026 and OPTION 3 Line Item 00027, **and Line Item 0028.**

5. BASIS of AWARD: The contract will be award in accordance with FAR 52.214-19 Contract Award – Sealed Bidding – Construction.

6. Union Pacific Rail Road – All work performed near any and all rail road lines, rail road trestles or rail road bridge shall conform to the specifications herein to include those portions of the Construction & Maintenance Agreement (C&M Agreement) which are applicable to the construction contractor for this project. The C&M Agreement is Located in Appendix J.

7. Option 1 and Option 3 will be awarded at the time of the Base Contract Award.

8. Option 2 will be awarded only if groundwater is encountered in the channel reach from Sta. 155+75.00 to Sta. 164+92.98.

9. The Contractor shall comply with all terms and conditions in all Specification Appendices.

-- End of Document --

CONFORMED

CLAUSES INCORPORATED BY REFERENCE

52.202-1	Definitions	NOV 2013
52.203-3	Gratuities	APR 1984
52.203-6	Restrictions On Subcontractor Sales To The Government	SEP 2006
52.203-7	Anti-Kickback Procedures	MAY 2014
52.203-8	Cancellation, Rescission, and Recovery of Funds for Illegal or Improper Activity	MAY 2014
52.203-10	Price Or Fee Adjustment For Illegal Or Improper Activity	MAY 2014
52.203-12	Limitation On Payments To Influence Certain Federal Transactions	OCT 2010
52.203-13	Contractor Code of Business Ethics and Conduct	OCT 2015
52.203-17	Contractor Employee Whistleblower Rights and Requirement To Inform Employees of Whistleblower Rights	APR 2014
52.204-4	Printed or Copied Double-Sided on Postconsumer Fiber Content Paper	MAY 2011
52.204-10	Reporting Executive Compensation and First-Tier Subcontract Awards	OCT 2015
52.209-6	Protecting the Government's Interest When Subcontracting With Contractors Debarred, Suspended, or Proposed for Debarment	OCT 2015
52.211-18	Variation in Estimated Quantity	APR 1984
52.214-26	Audit and Records--Sealed Bidding	OCT 2010
52.214-27	Price Reduction for Defective Certified Cost or Pricing Data - Modifications - Sealed Bidding	AUG 2011
52.214-28	Subcontracting Certified Cost Or Pricing Data--Modifications--Sealed Bidding	OCT 2010
52.219-8	Utilization of Small Business Concerns	OCT 2014
52.219-16	Liquidated Damages-Subcontracting Plan	JAN 1999
52.222-3	Convict Labor	JUN 2003
52.222-4	Contract Work Hours and Safety Standards- Overtime Compensation	MAY 2014
52.222-6	Construction Wage Rate Requirements	MAY 2014
52.222-7	Withholding of Funds	MAY 2014
52.222-8	Payrolls and Basic Records	MAY 2014
52.222-9	Apprentices and Trainees	JUL 2005
52.222-10	Compliance with Copeland Act Requirements	FEB 1988
52.222-11	Subcontracts (Labor Standards)	MAY 2014
52.222-12	Contract Termination-Debarment	MAY 2014
52.222-13	Compliance With Construction Wage Rate Requirements and Related Regulations	MAY 2014
52.222-14	Disputes Concerning Labor Standards	FEB 1988
52.222-15	Certification of Eligibility	MAY 2014
52.222-21	Prohibition Of Segregated Facilities	APR 2015
52.222-22	Previous Contracts And Compliance Reports	FEB 1999
52.222-26	Equal Opportunity	APR 2015
52.222-27	Affirmative Action Compliance Requirements for Construction	APR 2015
52.222-35	Equal Opportunity for Veterans	OCT 2015
52.222-36	Equal Opportunity for Workers with Disabilities	JUL 2014

CONFORMED

52.222-37	Employment Reports on Veterans	FEB 2016
52.222-40	Notification of Employee Rights Under the National Labor Relations Act	DEC 2010
52.222-50	Combating Trafficking in Persons	MAR 2015
52.222-55	Minimum Wages Under Executive Order 13658	DEC 2015
52.223-2	Affirmative Procurement of Biobased Products Under Service and Construction Contracts	SEP 2013
52.223-6	Drug-Free Workplace	MAY 2001
52.223-18	Encouraging Contractor Policies To Ban Text Messaging While Driving	AUG 2011
52.225-12	Notice of Buy American Requirement - Construction Materials Under Trade Agreements	MAY 2014
52.225-13	Restrictions on Certain Foreign Purchases	JUN 2008
52.227-1	Authorization and Consent	DEC 2007
52.227-2	Notice And Assistance Regarding Patent And Copyright Infringement	DEC 2007
52.227-4	Patent Indemnity-Construction Contracts	DEC 2007
52.228-2	Additional Bond Security	OCT 1997
52.228-11	Pledges Of Assets	JAN 2012
52.228-12	Prospective Subcontractor Requests for Bonds	MAY 2014
52.228-15	Performance and Payment Bonds--Construction	OCT 2010
52.229-3	Federal, State And Local Taxes	FEB 2013
52.232-5	Payments under Fixed-Price Construction Contracts	MAY 2014
52.232-17	Interest	MAY 2014
52.232-23	Assignment Of Claims	MAY 2014
52.232-33	Payment by Electronic Funds Transfer--System for Award Management	JUL 2013
52.233-1 Alt I	Disputes (May 2014) - Alternate I	DEC 1991
52.233-3	Protest After Award	AUG 1996
52.233-4	Applicable Law for Breach of Contract Claim	OCT 2004
52.236-2	Differing Site Conditions	APR 1984
52.236-3	Site Investigation and Conditions Affecting the Work	APR 1984
52.236-5	Material and Workmanship	APR 1984
52.236-6	Superintendence by the Contractor	APR 1984
52.236-7	Permits and Responsibilities	NOV 1991
52.236-8	Other Contracts	APR 1984
52.236-9	Protection of Existing Vegetation, Structures, Equipment, Utilities, and Improvements	APR 1984
52.236-10	Operations and Storage Areas	APR 1984
52.236-11	Use and Possession Prior to Completion	APR 1984
52.236-12	Cleaning Up	APR 1984
52.236-13 Alt I	Accident Prevention (Nov 1991) - Alternate I	NOV 1991
52.236-15	Schedules for Construction Contracts	APR 1984
52.236-16 Alt I	Quantity Surveys (Apr 1984) - Alternate I	APR 1984
52.236-17	Layout of Work	APR 1984
52.236-21 Alt I	Specifications and Drawings for Construction (Feb 1997) - Alternate I	APR 1984
52.236-26	Preconstruction Conference	FEB 1995
52.242-13	Bankruptcy	JUL 1995
52.242-14	Suspension of Work	APR 1984
52.243-4	Changes	JUN 2007
52.244-6	Subcontracts for Commercial Items	FEB 2016
52.246-12	Inspection of Construction	AUG 1996
52.248-3	Value Engineering-Construction	OCT 2015

CONFORMED

52.249-2 Alt I	Termination for Convenience of the Government (Fixed-Price) (Apr 2012) - Alternate I	SEP 1996
52.249-10	Default (Fixed-Price Construction)	APR 1984
252.201-7000	Contracting Officer's Representative	DEC 1991
252.203-7000	Requirements Relating to Compensation of Former DoD Officials	SEP 2011
252.203-7001	Prohibition On Persons Convicted of Fraud or Other Defense-Contract-Related Felonies	DEC 2008
252.203-7002	Requirement to Inform Employees of Whistleblower Rights	SEP 2013
252.203-7003	Agency Office of the Inspector General	DEC 2012
252.204-7003	Control Of Government Personnel Work Product	APR 1992
252.204-7004 Alt A	System for Award Management Alternate A	FEB 2014
252.205-7000	Provision Of Information To Cooperative Agreement Holders	DEC 1991
252.209-7004	Subcontracting With Firms That Are Owned or Controlled By The Government of a Country that is a State Sponsor of Terrorism	OCT 2015
252.225-7012	Preference For Certain Domestic Commodities	FEB 2013
252.225-7031	Secondary Arab Boycott Of Israel	JUN 2005
252.226-7001	Utilization of Indian Organizations and Indian-Owned Economic Enterprises, and Native Hawaiian Small Business Concerns	SEP 2004
252.227-7025	Limitations on the Use or Disclosure of Government-Furnished Information Marked with Restrictive Legends	MAY 2013
252.227-7033	Rights in Shop Drawings	APR 1966
252.231-7000	Supplemental Cost Principles	DEC 1991
252.232-7003	Electronic Submission of Payment Requests and Receiving Reports	JUN 2012
252.232-7010	Levies on Contract Payments	DEC 2006
252.236-7000	Modification Proposals-Price Breakdown	DEC 1991
252.236-7002	Obstruction of Navigable Waterways	DEC 1991
252.236-7008	Contract Prices-Bidding Schedules	DEC 1991
252.243-7001	Pricing Of Contract Modifications	DEC 1991
252.243-7002	Requests for Equitable Adjustment	DEC 2012
252.244-7000	Subcontracts for Commercial Items	JUN 2013
252.247-7023	Transportation of Supplies by Sea	APR 2014
252.247-7024	Notification Of Transportation Of Supplies By Sea	MAR 2000

CONFORMED

CLAUSES INCORPORATED BY FULL TEXT

52.203-14 DISPLAY OF HOTLINE POSTER(S) (OCT 2015)

(a) Definition.

United States, as used in this clause, means the 50 States, the District of Columbia, and outlying areas.

(b) Display of fraud hotline poster(s). Except as provided in paragraph (c)--

(1) During contract performance in the United States, the Contractor shall prominently display in common work areas within business segments performing work under this contract and at contract work sites--

(i) Any agency fraud hotline poster or Department of Homeland Security (DHS) fraud hotline poster identified in paragraph (b)(3) of this clause; and

(ii) Any DHS fraud hotline poster subsequently identified by the Contracting Officer.

(2) Additionally, if the Contractor maintains a company website as a method of providing information to employees, the Contractor shall display an electronic version of the poster(s) at the website.

(3) Any required posters may be obtained as follows:

Poster(s) Obtain from

http://www.dodig.mil/hotline/htoline7.htm

(i) Appropriate agency name(s) and/or title of applicable Department of Homeland Security fraud hotline poster); and

(ii) The website(s) or other contact information for obtaining the poster(s).)

(c) If the Contractor has implemented a business ethics and conduct awareness program, including a reporting mechanism, such as a hotline poster, then the Contractor need not display any agency fraud hotline posters as required in paragraph (b) of this clause, other than any required DHS posters.

(d) Subcontracts. The Contractor shall include the substance of this clause, including this paragraph (d), in all subcontracts that exceed $5.5 million, except when the subcontract--

(1) Is for the acquisition of a commercial item; or

(2) Is performed entirely outside the United States.

(End of clause)

52.211-10 COMMENCEMENT, PROSECUTION, AND COMPLETION OF WORK (APR 1984)

The Contractor shall be required to (a) commence work under this contract within 5 calendar days after the date the Contractor receives the notice to proceed, (b) prosecute the work diligently, and (c) complete the entire work ready for use not later than 470 calendar days after receipt of notice to proceed. The time stated for completion shall include final cleanup of the premises.
(End of clause)

52.211-12 LIQUIDATED DAMAGES--CONSTRUCTION (SEP 2000)

(a) If the Contractor fails to complete the work within the time specified in the contract, the Contractor shall pay liquidated damages to the Government in the amount of $5,000.00 for each calendar day of delay until the work is completed or accepted.

(b) If the Government terminates the Contractor's right to proceed, liquidated damages will continue to accrue until the work is completed. These liquidated damages are in addition to excess costs of repurchase under the Termination clause.

CONFORMED

(End of clause)

52.219-28 POST-AWARD SMALL BUSINESS PROGRAM REREPRESENTATION (JULY 2013)

(a) Definitions. As used in this clause--

Long-term contract means a contract of more than five years in duration, including options. However, the term does not include contracts that exceed five years in duration because the period of performance has been extended for a cumulative period not to exceed six months under the clause at 52.217-8, Option to Extend Services, or other appropriate authority.

Small business concern means a concern, including its affiliates, that is independently owned and operated, not dominant in the field of operation in which it is bidding on Government contracts, and qualified as a small business under the criteria in 13 CFR part 121 and the size standard in paragraph (c) of this clause. Such a concern is ``not dominant in its field of operation'' when it does not exercise a controlling or major influence on a national basis in a kind of business activity in which a number of business concerns are primarily engaged. In determining whether dominance exists, consideration shall be given to all appropriate factors, including volume of business, number of employees, financial resources, competitive status or position, ownership or control of materials, processes, patents, license agreements, facilities, sales territory, and nature of business activity.

(b) If the Contractor represented that it was a small business concern prior to award of this contract, the Contractor shall represent its size status according to paragraph (e) of this clause or, if applicable, paragraph (g) of this clause, upon the occurrence of any of the following:

(1) Within 30 days after execution of a novation agreement or within 30 days after modification of the contract to include this clause, if the novation agreement was executed prior to inclusion of this clause in the contract.

(2) Within 30 days after a merger or acquisition that does not require a novation or within 30 days after modification of the contract to include this clause, if the merger or acquisition occurred prior to inclusion of this clause in the contract.

(3) For long-term contracts--

(i) Within 60 to 120 days prior to the end of the fifth year of the contract; and

(ii) Within 60 to 120 days prior to the date specified in the contract for exercising any option thereafter.

(c) The Contractor shall represent its size status in accordance with the size standard in effect at the time of this representation that corresponds to the North American Industry Classification System (NAICS) code assigned to this contract. The small business size standard corresponding to this NAICS code can be found at http://www.sba.gov/content/table-small-business-size-standards.

(d) The small business size standard for a Contractor providing a product which it does not manufacture itself, for a contract other than a construction or service contract, is 500 employees.

(e) Except as provided in paragraph (g) of this clause, the Contractor shall make the representation required by paragraph (b) of this clause by validating or updating all its representations in the Representations and Certifications section of the System for Award Management (SAM) and its other data in SAM, as necessary, to ensure that they reflect the Contractor's current status. The Contractor shall notify the contracting office in writing within the timeframes specified in paragraph (b) of this clause that the data have been validated or updated, and provide the date of the validation or update.

CONFORMED

(f) If the Contractor represented that it was other than a small business concern prior to award of this contract, the Contractor may, but is not required to, take the actions required by paragraphs (e) or (g) of this clause.

(g) If the Contractor does not have representations and certifications in SAM, or does not have a representation in SAM for the NAICS code applicable to this contract, the Contractor is required to complete the following representation and submit it to the contracting office, along with the contract number and the date on which the representation was completed:

The Contractor represents that it ( ) is, ( ) is not a small business concern under NAICS Code 237990- assigned to contract number .

(Contractor to sign and date and insert authorized signer's name and title).
(End of clause)

52.222-23 NOTICE OF REQUIREMENT FOR AFFIRMATIVE ACTION TO ENSURE EQUAL EMPLOYMENT OPPORTUNITY FOR CONSTRUCTION (FEB 1999)

(a) The offeror's attention is called to the Equal Opportunity clause and the Affirmative Action Compliance Requirements for Construction clause of this solicitation.

(b) The goals for minority and female participation, expressed in percentage terms for the Contractor's aggregate workforce in each trade on all construction work in the covered area, are as follows:

Goals for minority participation for each trade	Goals for female participation for each trade
25.6%	6.9%

These goals are applicable to all the Contractor's construction work performed in the covered area. If the Contractor performs construction work in a geographical area located outside of the covered area, the Contractor shall apply the goals established for the geographical area where the work is actually performed. Goals are published periodically in the Federal Register in notice form, and these notices may be obtained from any Office of Federal Contract Compliance Programs office.

(c) The Contractor's compliance with Executive Order 11246, as amended, and the regulations in 41 CFR 60-4 shall be based on (1) its implementation of the Equal Opportunity clause, (2) specific affirmative action obligations required by the clause entitled "Affirmative Action Compliance Requirements for Construction," and (3) its efforts to meet the goals. The hours of minority and female employment and training must be substantially uniform throughout the length of the contract, and in each trade. The Contractor shall make a good faith effort to employ minorities and women evenly on each of its projects. The transfer of minority or female employees or trainees from Contractor to Contractor, or from project to project, for the sole purpose of meeting the Contractor's goals shall be a violation of the contract, Executive Order 11246, as amended, and the regulations in 41 CFR 60-4. Compliance with the goals will be measured against the total work hours performed.

(d) The Contractor shall provide written notification to the Deputy Assistant Secretary for Federal Contract Compliance, U.S. Department of Labor, within 10 working days following award of any construction subcontract in excess of $10,000 at any tier for construction work under the contract resulting from this solicitation. The notification shall list the --

(1) Name, address, and telephone number of the subcontractor;

CONFORMED

(2) Employer's identification number of the subcontractor;

(3) Estimated dollar amount of the subcontract;

(4) Estimated starting and completion dates of the subcontract; and

(5) Geographical area in which the subcontract is to be performed.

(e) As used in this Notice, and in any contract resulting from this solicitation, the "covered area" is, California, Santa Clara County, Milpitas.

(End of provision)

52.223-3 HAZARDOUS MATERIAL IDENTIFICATION AND MATERIAL SAFETY DATA (JAN 1997)

(a) "Hazardous material", as used in this clause, includes any material defined as hazardous under the latest version of Federal Standard No. 313 (including revisions adopted during the term of the contract).

(b) The offeror must list any hazardous material, as defined in paragraph (a) of this clause, to be delivered under this contract. The hazardous material shall be properly identified and include any applicable identification number, such as National Stock Number or Special Item Number. This information shall also be included on the Material Safety Data Sheet submitted under this contract.

Material (If none, insert "None")	Identification No.
___	___
___	___
___	___

(c) This list must be updated during performance of the contract whenever the Contractor determines that any other material to be delivered under this contract is hazardous.

(d) The apparently successful offeror agrees to submit, for each item as required prior to award, a Material Safety Data Sheet, meeting the requirements of 29 CFR 1910.1200(g) and the latest version of Federal Standard No. 313, for all hazardous material identified in paragraph (b) of this clause. Data shall be submitted in accordance with Federal Standard No. 313, whether or not the apparently successful offeror is the actual manufacturer of these items. Failure to submit the Material Safety Data Sheet prior to award may result in the apparently successful offeror being considered non-responsible and ineligible for award.

(e) If, after award, there is a change in the composition of the item(s) or a revision to Federal Standard No. 313, which renders incomplete or inaccurate the data submitted under paragraph (d) of this clause, the Contractor shall promptly notify the Contracting Officer and resubmit the data.

(f) Neither the requirements of this clause nor any act or failure to act by the Government shall relieve the Contractor of any responsibility or liability for the safety of Government, Contractor, or subcontractor personnel or property.

(g) Nothing contained in this clause shall relieve the Contractor from complying with applicable Federal, State, and

CONFORMED

local laws, codes, ordinances, and regulations (including the obtaining of licenses and permits) in connection with hazardous material.

(h) The Government's rights in data furnished under this contract with respect to hazardous material are as follows:

(1) To use, duplicate and disclose any data to which this clause is applicable. The purposes of this right are to--

(i) Apprise personnel of the hazards to which they may be exposed in using, handling, packaging, transporting, or disposing of hazardous materials;

(ii) Obtain medical treatment for those affected by the material; and

(iii) Have others use, duplicate, and disclose the data for the Government for these purposes.

(2) To use, duplicate, and disclose data furnished under this clause, in accordance with subparagraph (h)(1) of this clause, in precedence over any other clause of this contract providing for rights in data.

(3) The Government is not precluded from using similar or identical data acquired from other sources.

(End of clause)

52.225-11 BUY AMERICAN--CONSTRUCTION MATERIALS UNDER TRADE AGREEMENTS (FEB 2016)

(a) Definitions. As used in this clause--

Caribbean Basin country construction material means a construction material that--

(1) Is wholly the growth, product, or manufacture of a Caribbean Basin country; or

(2) In the case of a construction material that consists in whole or in part of materials from another country, has been substantially transformed in a Caribbean Basin country into a new and different construction material distinct from the materials from which it was transformed.

Commercially available off-the-shelf (COTS) item—

(1) Means any item of supply (including construction material) that is--

(i) A commercial item (as defined in paragraph (1) of the definition at FAR 2.101);

(ii) Sold in substantial quantities in the commercial marketplace; and

(iii) Offered to the Government, under a contract or subcontract at any tier, without modification, in the same form in which it is sold in the commercial marketplace; and

(2) Does not include bulk cargo, as defined in 46 U.S.C. 40102(4) such as agricultural products and petroleum products.

Component means an article, material, or supply incorporated directly into a construction material.

Construction material means an article, material, or supply brought to the construction site by the Contractor or subcontractor for incorporation into the building or work. The term also includes an item brought to the site preassembled from articles, materials, or supplies. However, emergency life safety systems, such as emergency

CONFORMED

lighting, fire alarm, and audio evacuation systems, that are discrete systems incorporated into a public building or work and that are produced as complete systems, are evaluated as a single and distinct construction material regardless of when or how the individual parts or components of those systems are delivered to the construction site. Materials purchased directly by the Government are supplies, not construction material.

Cost of components means--

(1) For components purchased by the Contractor, the acquisition cost, including transportation costs to the place of incorporation into the construction material (whether or not such costs are paid to a domestic firm), and any applicable duty (whether or not a duty-free entry certificate is issued); or

(2) For components manufactured by the Contractor, all costs associated with the manufacture of the component, including transportation costs as described in paragraph (1) of this definition, plus allocable overhead costs, but excluding profit. Cost of components does not include any costs associated with the manufacture of the construction material.

Designated country means any of the following countries:

(1) A World Trade Organization Government Procurement Agreement (WTO GPA) country (Armenia, Aruba, Austria, Belgium, Bulgaria, Canada, Croatia, Cyprus, Czech Republic, Denmark, Estonia, Finland, France, Germany, Greece, Hong Kong, Hungary, Iceland, Ireland, Israel, Italy, Japan, Korea (Republic of), Latvia, Liechtenstein, Lithuania, Luxembourg, Malta, Montenegro, Netherlands, New Zealand, Norway, Poland, Portugal, Romania, Singapore, Slovak Republic, Slovenia, Spain, Sweden, Switzerland, Taiwan or United Kingdom);

(2) A Free Trade Agreement (FTA) country (Australia, Bahrain, Canada, Chile, Colombia, Costa Rica, Dominican Republic, El Salvador, Guatemala, Honduras, Korea (Republic of), Mexico, Morocco, Nicaragua, Oman, Panama, Peru, or Singapore);

(3) A least developed country (Afghanistan, Angola, Bangladesh, Benin, Bhutan, Burkina Faso, Burundi, Cambodia, Central African Republic, Chad, Comoros, Democratic Republic of Congo, Djibouti, Equatorial Guinea, Eritrea, Ethiopia, Gambia, Guinea, Guinea-Bissau, Haiti, Kiribati, Laos, Lesotho, Liberia, Madagascar, Malawi, Mali, Mauritania, Mozambique, Nepal, Niger, Rwanda, Samoa, Sao Tome and Principe, Senegal, Sierra Leone, Solomon Islands, Somalia, South Sudan, Tanzania, Timor-Leste, Togo, Tuvalu, Uganda, Vanuatu, Yemen, or Zambia); or

(4) A Caribbean Basin country (Antigua and Barbuda, Aruba, Bahamas, Barbados, Belize, Bonaire, British Virgin Islands, Curacao, Dominica, Grenada, Guyana, Haiti, Jamaica, Montserrat, Saba, St. Kitts and Nevis, St. Lucia, St. Vincent and the Grenadines, Sint Eustatius, Sint Maarten, or Trinidad and Tobago).

Designated country construction material means a construction material that is a WTO GPA country construction material, an FTA country construction material, a least developed country construction material, or a Caribbean Basin country construction material.

Domestic construction material means--

(1) An unmanufactured construction material mined or produced in the United States;

(2) A construction material manufactured in the United States, if--

(i) The cost of its components mined, produced, or manufactured in the United States exceeds 50 percent of the cost of all its components. Components of foreign origin of the same class or kind for which non-availability determinations have been made are treated as domestic; or

(ii) The construction material is a COTS item.

CONFORMED

Foreign construction material means a construction material other than a domestic construction material.

Least developed country construction material means a construction material that--

(1) Is wholly the growth, product, or manufacture of a least developed country; or

(2) In the case of a construction material that consists in whole or in part of materials from another country, has been substantially transformed in a least developed country into a new and different construction material distinct from the materials from which it was transformed.

“Free Trade Agreement country construction material” means a construction material that—

(1) Is wholly the growth, product, or manufacture of a Free Trade Agreement (FTA) country; or

(2) In the case of a construction material that consists in whole or in part of materials from another country, has been substantially transformed in a FTA country into a new and different construction material distinct from the materials from which it was transformed.

“Least developed country construction material” means a construction material that—

(1) Is wholly the growth, product, or manufacture of a least developed country; or

(2) In the case of a construction material that consists in whole or in part of materials from another country, has been substantially transformed in a least developed country into a new and different construction material distinct from the materials from which it was transformed.

United States means the 50 States, the District of Columbia, and outlying areas.

WTO GPA country construction material means a construction material that--

(1) Is wholly the growth, product, or manufacture of a WTO GPA country; or

(2) In the case of a construction material that consists in whole or in part of materials from another country, has been substantially transformed in a WTO GPA country into a new and different construction material distinct from the materials from which it was transformed.

(b) Construction materials.

(1) This clause implements 41 U.S.C. chapter 83, Buy American, by providing a preference for domestic construction material. In accordance with 41 U.S.C. 1907, the component test of the Buy American statute is waived for construction material that is a COTS item. (See FAR 12.505(a)(2)). In addition, the Contracting Officer has determined that the WTO GPA and Free Trade Agreements (FTAs) apply to this acquisition. Therefore, the Buy American restrictions are waived for designated country construction materials.

(2) The Contractor shall use only domestic or designated country construction material in performing this contract, except as provided in paragraphs (b)(3) and (b)(4) of this clause.

(3) The requirement in paragraph (b)(2) of this clause does not apply to information technology that is a commercial item or to the construction materials or components listed by the Government as follows:

[Contracting Officer to list applicable excepted materials or indicate ``none"]

(4) The Contracting Officer may add other foreign construction material to the list in paragraph (b)(3) of this clause if the Government determines that--

CONFORMED

(i) The cost of domestic construction material would be unreasonable. The cost of a particular domestic construction material subject to the restrictions of the Buy American statute is unreasonable when the cost of such material exceeds the cost of foreign material by more than 6 percent;

(ii) The application of the restriction of the Buy American statute to a particular construction material would be impracticable or inconsistent with the public interest; or

(iii) The construction material is not mined, produced, or manufactured in the United States in sufficient and reasonably available commercial quantities of a satisfactory quality.

(c) Request for determination of inapplicability of the Buy American statute.

(1)(i) Any Contractor request to use foreign construction material in accordance with paragraph (b)(4) of this clause shall include adequate information for Government evaluation of the request, including--

(A) A description of the foreign and domestic construction materials;

(B) Unit of measure;

(C) Quantity;

(D) Price;

(E) Time of delivery or availability;

(F) Location of the construction project;

(G) Name and address of the proposed supplier; and

(H) A detailed justification of the reason for use of foreign construction materials cited in accordance with paragraph (b)(3) of this clause.

(ii) A request based on unreasonable cost shall include a reasonable survey of the market and a completed price comparison table in the format in paragraph (d) of this clause.

(iii) The price of construction material shall include all delivery costs to the construction site and any applicable duty (whether or not a duty-free certificate may be issued).

(iv) Any Contractor request for a determination submitted after contract award shall explain why the Contractor could not reasonably foresee the need for such determination and could not have requested the determination before contract award. If the Contractor does not submit a satisfactory explanation, the Contracting Officer need not make a determination.

(2) If the Government determines after contract award that an exception to the Buy American statute applies and the Contracting Officer and the Contractor negotiate adequate consideration, the Contracting Officer will modify the contract to allow use of the foreign construction material. However, when the basis for the exception is the unreasonable price of a domestic construction material, adequate consideration is not less than the differential established in paragraph (b)(4)(i) of this clause.

(3) Unless the Government determines that an exception to the Buy American statute applies, use of foreign construction material is noncompliant with the Buy American statute.

CONFORMED

(d) Data. To permit evaluation of requests under paragraph (c) of this clause based on unreasonable cost, the Contractor shall include the following information and any applicable supporting data based on the survey of suppliers:

Foreign and Domestic Construction Materials Price Comparison

Construction material description	Unit of measure	Quantity	Price (dollars) \1\
Item 1:			
Foreign construction material....	.....	.....	.....
Domestic construction material...	.....	.....	.....
Item 2:			
Foreign construction material....	.....	.....	.....
Domestic construction material...	.....	.....	.....

\1\ Include all delivery costs to the construction site and any applicable duty (whether or not a duty-free entry certificate is issued).

List name, address, telephone number, and contact for suppliers surveyed. Attach copy of response; if oral, attach summary.

Include other applicable supporting information.

(End of clause)

52.228-1 BID GUARANTEE (SEP 1996)

(a) Failure to furnish a bid guarantee in the proper form and amount, by the time set for opening of bids, may be cause for rejection of the bid.

(b) The bidder shall furnish a bid guarantee in the form of a firm commitment, e.g., bid bond supported by good and sufficient surety or sureties acceptable to the Government, postal money order, certified check, cashier's check, irrevocable letter of credit, or, under Treasury Department regulations, certain bonds or notes of the United States. The Contracting Officer will return bid guarantees, other than bid bonds, (1) to unsuccessful bidders as soon as practicable after the opening of bids, and (2) to the successful bidder upon execution of contractual documents and bonds (including any necessary coinsurance or reinsurance agreements), as required by the bid as accepted.-

(c) The amount of the bid guarantee shall be 20 percent of the bid price or $3,000,000, whichever is less.-

(d) If the successful bidder, upon acceptance of its bid by the Government within the period specified for acceptance, fails to execute all contractual documents or furnish executed bond(s) within 10 days after receipt of the forms by the bidder, the Contracting Officer may terminate the contract for default.-

(e) In the event the contract is terminated for default, the bidder is liable for any cost of acquiring the work that exceeds the amount of its bid, and the bid guarantee is available to offset the difference.
(End of provision)

52.228-14 IRREVOCABLE LETTER OF CREDIT (NOV 2014)

(a) “Irrevocable letter of credit” (ILC), as used in this clause, means a written commitment by a federally insured financial institution to pay all or part of a stated amount of money, until the expiration date of the letter, upon presentation by the Government (the beneficiary) of a written demand therefor. Neither the financial institution nor

CONFORMED

the offeror/Contractor can revoke or condition the letter of credit.

(b) If the offeror intends to use an ILC in lieu of a bid bond, or to secure other types of bonds such as performance and payment bonds, the letter of credit and letter of confirmation formats in paragraphs (e) and (f) of this clause shall be used.

(c) The letter of credit shall be irrevocable, shall require presentation of no document other than a written demand and the ILC (including confirming letter, if any), shall be issued/confirmed by an acceptable federally insured financial institution as provided in paragraph (d) of this clause, and--

(1) If used as a bid guarantee, the ILC shall expire no earlier than 60 days after the close of the bid acceptance period;

(2) If used as an alternative to corporate or individual sureties as security for a performance or payment bond, the offeror/Contractor may submit an ILC with an initial expiration date estimated to cover the entire period for which financial security is required or may submit an ILC with an initial expiration date that is a minimum period of one year from the date of issuance. The ILC shall provide that, unless the issuer provides the beneficiary written notice of non-renewal at least 60 days in advance of the current expiration date, the ILC is automatically extended without amendment for one year from the expiration date, or any future expiration date, until the period of required coverage is completed and the Contracting Officer provides the financial institution with a written statement waiving the right to payment. The period of required coverage shall be:

(i) For contracts subject to 40 U.S.C. chapter 31, subchapter III, Bonds, the later of--

(A) One year following the expected date of final payment;

(B) For performance bonds only, until completion of any warranty period; or

(C) For payment bonds only, until resolution of all claims filed against the payment bond during the one-year period following final payment.

(ii) For contracts not subject to the Miller Act, the later of--

(A) 90 days following final payment; or

(B) For performance bonds only, until completion of any warranty period.

(d)(1) Only federally insured financial institutions rated investment grade by a commercial rating service shall issue or confirm the ILC.

(2) Unless the financial institution issuing the ILC had letter of credit business of at least $25 million in the past year, ILCs over $5 million must be confirmed by another acceptable financial institution that had letter of credit business of at least $25 million in the past year.

(3) The Offeror/Contractor shall provide the Contracting Officer a credit rating that indicates the financial institutions have the required credit rating as of the date of issuance of the ILC.

(4) The current rating for a financial institution is available through any of the following rating services registered with the U.S. Securities and Exchange Commission (SEC) as a Nationally Recognized Statistical Rating Organization (NRSRO). NRSRO's can be located at the Web site http://www.sec.gov/answers/nrsro.htm maintained by the SEC.

(e) The following format shall be used by the issuing financial institution to create an ILC:

CONFORMED

___
[Issuing Financial Institution's Letterhead or Name and Address]

Issue Date _ ___

IRREVOCABLE LETTER OF CREDIT NO. ___

Account party's name ___ _

Account party's address ___ _

For Solicitation No. ___ _(for reference only)

TO: [___ U.S. Government agency]

[___ U.S. Government agency's address]

1. We hereby establish this irrevocable and transferable Letter of Credit in your favor for one or more drawings up to United States $ ___ . This Letter of Credit is payable at [issuing financial institution's and, if any, confirming financial institution's] office at [___ issuing financial institution's address and, if any, confirming financial institution's address] and expires with our close of business on ___ , or any automatically extended expiration date.

2. We hereby undertake to honor your or the transferee's sight draft(s) drawn on the issuing or, if any, the confirming financial institution, for all or any part of this credit if presented with this Letter of Credit and confirmation, if any, at the office specified in paragraph 1 of this Letter of Credit on or before the expiration date or any automatically extended expiration date.

3. [This paragraph is omitted if used as a bid guarantee, and subsequent paragraphs are renumbered.] It is a condition of this Letter of Credit that it is deemed to be automatically extended without amendment for one year from the expiration date hereof, or any future expiration date, unless at least 60 days prior to any expiration date, we notify you or the transferee by registered mail, or other receipted means of delivery, that we elect not to consider this Letter of Credit renewed for any such additional period. At the time we notify you, we also agree to notify the account party (and confirming financial institution, if any) by the same means of delivery.

4. This Letter of Credit is transferable. Transfers and assignments of proceeds are to be effected without charge to either the beneficiary or the transferee/assignee of proceeds. Such transfer or assignment shall be only at the written direction of the Government (the beneficiary) in a form satisfactory to the issuing financial institution and the confirming financial institution, if any.

5. This Letter of Credit is subject to the Uniform Customs and Practice (UCP) for Documentary Credits, International Chamber of Commerce Publication No. ____ -- (Insert version in effect at the time of ILC issuance, e.g., ``Publication 600, 2006 edition") and to the extent not inconsistent therewith, to the laws of ____ --[State of confirming financial institution, if any, otherwise State of issuing financial institution].

6. If this credit expires during an interruption of business of this financial institution as described in Article 17 of the UCP, the financial institution specifically agrees to effect payment if this credit is drawn against within 30 days after the resumption of our business.

Sincerely,

___

[___ Issuing financial institution]

CONFORMED

(f) The following format shall be used by the financial institution to confirm an ILC:

___ [Confirming Financial Institution's Letterhead or Name and Address]

(Date) ___

Our Letter of Credit Advice Number ___

Beneficiary: ___ [U.S. Government agency]

Issuing Financial Institution: ___

Issuing Financial Institution's LC No.: ___

Gentlemen:

1. We hereby confirm the above indicated Letter of Credit, the original of which is attached, issued by ___ [name of issuing financial institution] for drawings of up to United States dollars ___ _/U.S. $ ___ and expiring with our close of business on ___ [the expiration date], or any automatically extended expiration date.

2. Draft(s) drawn under the Letter of Credit and this Confirmation are payable at our office located at ___ _.

3. We hereby undertake to honor sight draft(s) drawn under and presented with the Letter of Credit and this Confirmation at our offices as specified herein.

4. [This paragraph is omitted if used as a bid guarantee, and subsequent paragraphs are renumbered.] It is a condition of this confirmation that it be deemed automatically extended without amendment for one year from the expiration date hereof, or any automatically extended expiration date, unless:

(a) At least 60 days prior to any such expiration date, we shall notify the Contracting Officer, or the transferee and the issuing financial institution, by registered mail or other receipted means of delivery, that we elect not to consider this confirmation extended for any such additional period; or

(b) The issuing financial institution shall have exercised its right to notify you or the transferee, the account party, and ourselves, of its election not to extend the expiration date of the Letter of Credit.

5. This confirmation is subject to the Uniform Customs and Practice (UCP) for Documentary Credits, International Chamber of Commerce Publication No. ____ -- (Insert version in effect at the time of ILC issuance, e.g., ``Publication 600, 2006 edition") and to the extent not inconsistent therewith, to the laws of ____ --[State of confirming financial institution].

6. If this confirmation expires during an interruption of business of this financial institution as described in Article 17 of the UCP, we specifically agree to effect payment if this credit is drawn against within 30 days after the resumption of our business.

Sincerely,

___

[Confirming financial institution]

(g) The following format shall be used by the Contracting Officer for a sight draft to draw on the Letter of Credit:

SIGHT DRAFT

CONFORMED

___
[City, State]

(Date) ___

[Name and address of financial institution]

Pay to the order of ___ [Beneficiary Agency] ___ the sum of United States ___ This draft is drawn under Irrevocable Letter of Credit No. ___

___ [Beneficiary Agency]

By: ___

(End of clause)

52.232-27 PROMPT PAYMENT FOR CONSTRUCTION CONTRACTS (MAY 2014)

Notwithstanding any other payment terms in this contract, the Government will make invoice payments under the terms and conditions specified in this clause. The Government considers payment as being made on the day a check is dated or the date of an electronic funds transfer. Definitions of pertinent terms are set forth in sections 2.101, 32.001, and 32.902 of the Federal Acquisition Regulation. All days referred to in this clause are calendar days, unless otherwise specified. (However, see paragraph (a)(3) concerning payments due on Saturdays, Sundays, and legal holidays.)

(a) Invoice payments--(1) Types of invoice payments. For purposes of this clause, there are several types of invoice payments that may occur under this contract, as follows:

(i) Progress payments, if provided for elsewhere in this contract, based on Contracting Officer approval of the estimated amount and value of work or services performed, including payments for reaching milestones in any project.

(A) The due date for making such payments is 14 days after the designated billing office receives a proper payment request. If the designated billing office fails to annotate the payment request with the actual date of receipt at the time of receipt, the payment due date is the 14th day after the date of the Contractor's payment request, provided the designated billing office receives a proper payment request and there is no disagreement over quantity, quality, or Contractor compliance with contract requirements.

(B) The due date for payment of any amounts retained by the Contracting Officer in accordance with the clause at 52.232-5, Payments Under Fixed-Price Construction Contracts, is as specified in the contract or, if not specified, 30 days after approval by the Contracting Officer for release to the Contractor.

(ii) Final payments based on completion and acceptance of all work and presentation of release of all claims against the Government arising by virtue of the contract, and payments for partial deliveries that have been accepted by the Government (e.g., each separate building, public work, or other division of the contract for which the price is stated separately in the contract).

(A) The due date for making such payments is the later of the following two events:

(1) The 30th day after the designated billing office receives a proper invoice from the Contractor.

CONFORMED

(2) The 30th day after Government acceptance of the work or services completed by the Contractor. For a final invoice when the payment amount is subject to contract settlement actions (e.g., release of claims), acceptance is deemed to occur on the effective date of the contract settlement.

(B) If the designated billing office fails to annotate the invoice with the date of actual receipt at the time of receipt, the invoice payment due date is the 30th day after the date of the Contractor's invoice, provided the designated billing office receives a proper invoice and there is no disagreement over quantity, quality, or Contractor compliance with contract requirements.

(2) Contractor's invoice. The Contractor shall prepare and submit invoices to the designated billing office specified in the contract. A proper invoice must include the items listed in paragraphs (a)(2)(i) through (a)(2)(xi) of this clause. If the invoice does not comply with these requirements, the designated billing office must return it within 7 days after receipt, with the reasons why it is not a proper invoice. When computing any interest penalty owed the Contractor, the Government will take into account if the Government notifies the Contractor of an improper invoice in an untimely manner.

(i) Name and address of the Contractor.

(ii) Invoice date and invoice number. (The Contractor should date invoices as close as possible to the date of mailing or transmission.)

(iii) Contract number or other authorization for work or services performed (including order number and contract line item number).

(iv) Description of work or services performed.

(v) Delivery and payment terms (e.g., discount for prompt payment terms).

(vi) Name and address of Contractor official to whom payment is to be sent (must be the same as that in the contract or in a proper notice of assignment).

(vii) Name (where practicable), title, phone number, and mailing address of person to notify in the event of a defective invoice.

(viii) For payments described in paragraph (a)(1)(i) of this clause, substantiation of the amounts requested and certification in accordance with the requirements of the clause at 52.232-5, Payments Under Fixed-Price Construction Contracts.

(ix) Taxpayer Identification Number (TIN). The Contractor shall include its TIN on the invoice only if required elsewhere in this contract.

(x) Electronic funds transfer (EFT) banking information.

(A) The Contractor shall include EFT banking information on the invoice only if required elsewhere in this contract.

(B) If EFT banking information is not required to be on the invoice, in order for the invoice to be a proper invoice, the Contractor shall have submitted correct EFT banking information in accordance with the applicable solicitation provision (e.g., 52.232-38, Submission of Electronic Funds Transfer Information with Offer), contract clause (e.g., 52.232-33, Payment by Electronic Funds Transfer--System for Award Management, or 52.232-34, Payment by Electronic Funds Transfer--Other Than System for Award Management), or applicable agency procedures.

(C) EFT banking information is not required if the Government waived the requirement to pay by EFT.

CONFORMED

(xi) Any other information or documentation required by the contract.

(3) Interest penalty. The designated payment office will pay an interest penalty automatically, without request from the Contractor, if payment is not made by the due date and the conditions listed in paragraphs (a)(3)(i) through (a)(3)(iii) of this clause are met, if applicable. However, when the due date falls on a Saturday, Sunday, or legal holiday, the designated payment office may make payment on the following working day without incurring a late payment interest penalty.

(i) The designated billing office received a proper invoice.

(ii) The Government processed a receiving report or other Government documentation authorizing payment and there was no disagreement over quantity, quality, Contractor compliance with any contract term or condition, or requested progress payment amount.

(iii) In the case of a final invoice for any balance of funds due the Contractor for work or services performed, the amount was not subject to further contract settlement actions between the Government and the Contractor.

(4) Computing penalty amount. The Government will compute the interest penalty in accordance with the Office of Management and Budget prompt payment regulations at 5 CFR part 1315.

(i) For the sole purpose of computing an interest penalty that might be due the Contractor for payments described in paragraph (a)(1)(ii) of this clause, Government acceptance or approval is deemed to occur constructively on the 7th day after the Contractor has completed the work or services in accordance with the terms and conditions of the contract. If actual acceptance or approval occurs within the constructive acceptance or approval period, the Government will base the determination of an interest penalty on the actual date of acceptance or approval. Constructive acceptance or constructive approval requirements do not apply if there is a disagreement over quantity, quality, or Contractor compliance with a contract provision. These requirements also do not compel Government officials to accept work or services, approve Contractor estimates, perform contract administration functions, or make payment prior to fulfilling their responsibilities.

(ii) The prompt payment regulations at 5 CFR 1315.10(c) do not require the Government to pay interest penalties if payment delays are due to disagreement between the Government and the Contractor over the payment amount or other issues involving contract compliance, or on amounts temporarily withheld or retained in accordance with the terms of the contract. The Government and the Contractor shall resolve claims involving disputes, and any interest that may be payable in accordance with the clause at FAR 52.233-1, Disputes.

(5) Discounts for prompt payment. The designated payment office will pay an interest penalty automatically, without request from the Contractor, if the Government takes a discount for prompt payment improperly. The Government will calculate the interest penalty in accordance with the prompt payment regulations at 5 CFR part 1315.

(6) Additional interest penalty. (i) The designated payment office will pay a penalty amount, calculated in accordance with the prompt payment regulations at 5 CFR part 1315 in addition to the interest penalty amount only if--

(A) The Government owes an interest penalty of $1 or more;

(B) The designated payment office does not pay the interest penalty within 10 days after the date the invoice amount is paid; and

(C) The Contractor makes a written demand to the designated payment office for additional penalty payment, in accordance with paragraph (a)(6)(ii) of this clause, postmarked not later than 40 days after the date the invoice amount is paid.

CONFORMED

(ii)(A) The Contractor shall support written demands for additional penalty payments with the following data. The Government will not request any additional data. The Contractor shall--

(1) Specifically assert that late payment interest is due under a specific invoice, and request payment of all overdue late payment interest penalty and such additional penalty as may be required;

(2) Attach a copy of the invoice on which the unpaid late payment interest was due; and

(3) State that payment of the principal has been received, including the date of receipt.

(B) If there is no postmark or the postmark is illegible--

(1) The designated payment office that receives the demand will annotate it with the date of receipt provided the demand is received on or before the 40th day after payment was made; or

(2) If the designated payment office fails to make the required annotation, the Government will determine the demand's validity based on the date the Contractor has placed on the demand, provided such date is no later than the 40th day after payment was made.

(b) Contract financing payments. If this contract provides for contract financing, the Government will make contract financing payments in accordance with the applicable contract financing clause.

(c) Subcontract clause requirements. The Contractor shall include in each subcontract for property or services (including a material supplier) for the purpose of performing this contract the following:

(1) Prompt payment for subcontractors. A payment clause that obligates the Contractor to pay the subcontractor for satisfactory performance under its subcontract not later than 7 days from receipt of payment out of such amounts as are paid to the Contractor under this contract.

(2) Interest for subcontractors. An interest penalty clause that obligates the Contractor to pay to the subcontractor an interest penalty for each payment not made in accordance with the payment clause--

(i) For the period beginning on the day after the required payment date and ending on the date on which payment of the amount due is made; and

(ii) Computed at the rate of interest established by the Secretary of the Treasury, and published in the Federal Register, for interest payments under 41 U.S.C. 7109 in effect at the time the Contractor accrues the obligation to pay an interest penalty.

(3) Subcontractor clause flow down. A clause requiring each subcontractor to use:

(i) Include a payment clause and an interest penalty clause conforming to the standards set forth in paragraphs (c)(1) and (c)(2) of this clause in each of its subcontracts; and

(ii) Require each of its subcontractors to include such clauses in their subcontracts with each lower-tier subcontractor or supplier.

(d) Subcontract clause interpretation. The clauses required by paragraph (c) of this clause shall not be construed to impair the right of the Contractor or a subcontractor at any tier to negotiate, and to include in their subcontract, provisions that--

(1) Retainage permitted. Permit the Contractor or a subcontractor to retain (without cause) a specified percentage of each progress payment otherwise due to a subcontractor for satisfactory performance under the subcontract without incurring any obligation to pay a late payment interest penalty, in accordance with terms and conditions agreed to by

CONFORMED

the parties to the subcontract, giving such recognition as the parties deem appropriate to the ability of a subcontractor to furnish a performance bond and a payment bond;

(2) Withholding permitted. Permit the Contractor or subcontractor to make a determination that part or all of the subcontractor's request for payment may be withheld in accordance with the subcontract agreement; and

(3) Withholding requirements. Permit such withholding without incurring any obligation to pay a late payment penalty if--

(i) A notice conforming to the standards of paragraph (g) of this clause previously has been furnished to the subcontractor; and

(ii) The Contractor furnishes to the Contracting Officer a copy of any notice issued by a Contractor pursuant to paragraph (d)(3)(i) of this clause.

(e) Subcontractor withholding procedures. If a Contractor, after making a request for payment to the Government but before making a payment to a subcontractor for the subcontractor's performance covered by the payment request, discovers that all or a portion of the payment otherwise due such subcontractor is subject to withholding from the subcontractor in accordance with the subcontract agreement, then the Contractor shall--

(1) Subcontractor notice. Furnish to the subcontractor a notice conforming to the standards of paragraph (g) of this clause as soon as practicable upon ascertaining the cause giving rise to a withholding, but prior to the due date for subcontractor payment;

(2) Contracting Officer notice. Furnish to the Contracting Officer, as soon as practicable, a copy of the notice furnished to the subcontractor pursuant to paragraph (e)(1) of this clause;

(3) Subcontractor progress payment reduction. Reduce the subcontractor's progress payment by an amount not to exceed the amount specified in the notice of withholding furnished under paragraph (e)(1) of this clause;

(4) Subsequent subcontractor payment. Pay the subcontractor as soon as practicable after the correction of the identified subcontract performance deficiency, and--

(i) Make such payment within--

(A) Seven days after correction of the identified subcontract performance deficiency (unless the funds therefor must be recovered from the Government because of a reduction under paragraph
(e)(5)(i)) of this clause; or

(B) Seven days after the Contractor recovers such funds from the Government; or

(ii) Incur an obligation to pay a late payment interest penalty computed at the rate of interest established by the Secretary of the Treasury, and published in the Federal Register, for interest payments under 41 U.S.C. 7109 in effect at the time the Contractor accrues the obligation to pay an interest penalty;

(5) Notice to Contracting Officer. Notify the Contracting Officer upon--

(i) Reduction of the amount of any subsequent certified application for payment; or

(ii) Payment to the subcontractor of any withheld amounts of a progress payment, specifying--

(A) The amounts withheld under paragraph (e)(1) of this clause; and

(B) The dates that such withholding began and ended; and

CONFORMED

(6) Interest to Government. Be obligated to pay to the Government an amount equal to interest on the withheld payments (computed in the manner provided in 31 U.S.C. 3903(c)(1)), from the 8th day after receipt of the withheld amounts from the Government until--

(i) The day the identified subcontractor performance deficiency is corrected; or

(ii) The date that any subsequent payment is reduced under paragraph (e)(5)(i) of this clause.

(f) Third-party deficiency reports—

(1) Withholding from subcontractor. If a Contractor, after making payment to a first-tier subcontractor, receives from a supplier or subcontractor of the first-tier subcontractor (hereafter referred to as a “second-tier subcontractor”) a written notice in accordance with 40 U.S.C. 3133, asserting a deficiency in such first-tier subcontractor's performance under the contract for which the Contractor may be ultimately liable, and the Contractor determines that all or a portion of future payments otherwise due such first-tier subcontractor is subject to withholding in accordance with the subcontract agreement, the Contractor may, without incurring an obligation to pay an interest penalty under paragraph (e)(6) of this clause--

(i) Furnish to the first-tier subcontractor a notice conforming to the standards of paragraph (g) of this clause as soon as practicable upon making such determination; and

(ii) Withhold from the first-tier subcontractor's next available progress payment or payments an amount not to exceed the amount specified in the notice of withholding furnished under paragraph (f)(1)(i) of this clause.

(2) Subsequent payment or interest charge. As soon as practicable, but not later than 7 days after receipt of satisfactory written notification that the identified subcontract performance deficiency has been corrected, the Contractor shall--

(i) Pay the amount withheld under paragraph (f)(1)(ii) of this clause to such first-tier subcontractor; or

(ii) Incur an obligation to pay a late payment interest penalty to such first-tier subcontractor computed at the rate of interest established by the Secretary of the Treasury, and published in the Federal Register, for interest payments under section 12 of 41 U.S.C. 7109 in effect at the time the Contractor accrues the obligation to pay an interest penalty.

(g) Written notice of subcontractor withholding. The Contractor shall issue a written notice of any withholding to a subcontractor (with a copy furnished to the Contracting Officer), specifying--

(1) The amount to be withheld;

(2) The specific causes for the withholding under the terms of the subcontract; and

(3) The remedial actions to be taken by the subcontractor in order to receive payment of the amounts withheld.

(h) Subcontractor payment entitlement. The Contractor may not request payment from the Government of any amount withheld or retained in accordance with paragraph (d) of this clause until such time as the Contractor has determined and certified to the Contracting Officer that the subcontractor is entitled to the payment of such amount.

(i) Prime-subcontractor disputes. A dispute between the Contractor and subcontractor relating to the amount or entitlement of a subcontractor to a payment or a late payment interest penalty under a clause included in the subcontract pursuant to paragraph (c) of this clause does not constitute a dispute to which the Government is a party. The Government may not be interpleaded in any judicial or administrative proceeding involving such a dispute.

CONFORMED

(j) Preservation of prime-subcontractor rights. Except as provided in paragraph (i) of this clause, this clause shall not limit or impair any contractual, administrative, or judicial remedies otherwise available to the Contractor or a subcontractor in the event of a dispute involving late payment or nonpayment by the Contractor or deficient subcontract performance or nonperformance by a subcontractor.

(k) Non-recourse for prime contractor interest penalty. The Contractor's obligation to pay an interest penalty to a subcontractor pursuant to the clauses included in a subcontract under paragraph (c) of this clause shall not be construed to be an obligation of the Government for such interest penalty. A cost-reimbursement claim may not include any amount for reimbursement of such interest penalty.

(l) Overpayments. If the Contractor becomes aware of a duplicate contract financing or invoice payment or that the Government has otherwise overpaid on a contract financing or invoice payment, the Contractor shall--

(1) Remit the overpayment amount to the payment office cited in the contract along with a description of the overpayment including the--

(i) Circumstances of the overpayment (e.g., duplicate payment, erroneous payment, liquidation errors, date(s) of overpayment);

(ii) Affected contract number and delivery order number if applicable;

(iii) Affected contract line item or subline item, if applicable; and

(iv) Contractor point of contact.

(2) Provide a copy of the remittance and supporting documentation to the Contracting Officer.
(End of clause)

52.236-1 PERFORMANCE OF WORK BY THE CONTRACTOR (APR 1984)

The Contractor shall perform on the site, and with its own organization, work equivalent to at least 40 percent of the total amount of work to be performed under the contract. This percentage may be reduced by a supplemental agreement to this contract if, during performing the work, the Contractor requests a reduction and the Contracting Officer determines that the reduction would be to the advantage of the Government.
(End of clause)

52.236-4 PHYSICAL DATA (APR 1984)

Data and information furnished or referred to below is for the Contractor's information. The Government shall not be responsible for any interpretation of or conclusion drawn from the data or information by the Contractor.

(a) The indications of physical conditions on the drawings and in the specifications are the result of site investigations by the Government.

(b) Weather conditions: The Contractor shall satisfy himself/herself as to the hazards likely to arise from weather conditions. Complete weather records and reports may be obtained from any U.S. Weather Bureau Office.

(c) Transportation facilities: The Contractor shall make his/her own investigation of the conditions of existing public and private roads and of clearances, restrictions, bridge load limits and other limitations affecting transportation and

CONFORMED

ingress and egress at the job site. The unavailability of transportation facilities or limitations thereon shall not become a basis for claims against the Government or extension of time for completion of the work.
(End of clause)

52.244-2 SUBCONTRACTS (OCT 2010)

(a) Definitions. As used in this clause--

Approved purchasing system means a Contractor's purchasing system that has been reviewed and approved in accordance with Part 44 of the Federal Acquisition Regulation (FAR).

Consent to subcontract means the Contracting Officer's written consent for the Contractor to enter into a particular subcontract.

Subcontract means any contract, as defined in FAR Subpart 2.1, entered into by a subcontractor to furnish supplies or services for performance of the prime contractor a subcontract. It includes, but is not limited to, purchase orders, and changes and modifications to purchase orders.

(b) When this clause is included in a fixed-price type contract, consent to subcontract is required only on unpriced contract actions (including unpriced modifications or unpriced delivery orders), and only if required in accordance with paragraph (c) or (d) of this clause.

(c) If the Contractor does not have an approved purchasing system, consent to subcontract is required for any subcontract that—

(1) Is of the cost-reimbursement, time-and-materials, or labor-hour type; or

(2) Is fixed-price and exceeds—

(i) For a contract awarded by the Department of Defense, the Coast Guard, or the National Aeronautics and Space Administration, the greater of the simplified acquisition threshold or 5 percent of the total estimated cost of the contract; or

(ii) For a contract awarded by a civilian agency other than the Coast Guard and the National Aeronautics and Space Administration, either the simplified acquisition threshold or 5 percent of the total estimated cost of the contract.

(d) If the Contractor has an approved purchasing system, the Contractor nevertheless shall obtain the Contracting Officer’s written consent before placing the following subcontracts: None

(e)(1) The Contractor shall notify the Contracting Officer reasonably in advance of placing any subcontract or modification thereof for which consent is required under paragraph (b), (c), or (d) of this clause, including the following information:

(i) A description of the supplies or services to be subcontracted.

(ii) Identification of the type of subcontract to be used.

(iii) Identification of the proposed subcontractor.

(iv) The proposed subcontract price.

CONFORMED

(v) The subcontractor's current, complete, and accurate certified cost or pricing data and Certificate of Current Cost or Pricing Data, if required by other contract provisions.

(vi) The subcontractor's Disclosure Statement or Certificate relating to Cost Accounting Standards when such data are required by other provisions of this contract.

(vii) A negotiation memorandum reflecting—

(A) The principal elements of the subcontract price negotiations;

(B) The most significant considerations controlling establishment of initial or revised prices;

(C) The reason certified cost or pricing data were or were not required;

(D) The extent, if any, to which the Contractor did not rely on the subcontractor's certified cost or pricing data in determining
the price objective and in negotiating the final price;

(E) The extent to which it was recognized in the negotiation that the subcontractor's certified cost or pricing data were not accurate, complete, or current; the action taken by the Contractor and the subcontractor; and the effect of any such defective data on the total price negotiated;

(F) The reasons for any significant difference between the Contractor's price objective and the price negotiated; and

(G) A complete explanation of the incentive fee or profit plan when incentives are used. The explanation shall identify each critical performance element, management decisions used to quantify each incentive element, reasons for the incentives, and a summary of all trade-off possibilities considered.

(2) The Contractor is not required to notify the Contracting Officer in advance of entering into any subcontract for which consent is not required under paragraph (c), (d), or (e) of this clause.

(f) Unless the consent or approval specifically provides otherwise, neither consent by the Contracting Officer to any subcontract nor approval of the Contractor's purchasing system shall constitute a determination—

(1) Of the acceptability of any subcontract terms or conditions;

(2) Of the allow ability of any cost under this contract; or

(3) To relieve the Contractor of any responsibility for performing this contract.

(g) No subcontract or modification thereof placed under this contract shall provide for payment on a cost-plus-a-percentage-of-cost basis, and any fee payable under cost-reimbursement type subcontracts shall not exceed the fee limitations in FAR 15.404-4(c)(4)(i).

(h) The Contractor shall give the Contracting Officer immediate written notice of any action or suit filed and prompt notice of any claim made against the Contractor by any subcontractor or vendor that, in the opinion of the Contractor, may result in litigation related in any way to this contract, with respect to which the Contractor may be entitled to reimbursement from the Government.

(i) The Government reserves the right to review the Contractor's purchasing system as set forth in FAR Subpart 44.3.

(j) Paragraphs (c) and (e) of this clause do not apply to the following subcontracts, which were evaluated during negotiations:

CONFORMED

(End of clause)

52.246-21 WARRANTY OF CONSTRUCTION (MAR 1994)

(a) In addition to any other warranties in this contract, the Contractor warrants, except as provided in paragraph (i) of this clause, that work performed under this contract conforms to the contract requirements and is free of any defect in equipment, material, or design furnished, or workmanship performed by the Contractor or any subcontractor or supplier at any tier.

(b) This warranty shall continue for a period of 1 year from the date of final acceptance of the work. If the Government takes possession of any part of the work before final acceptance, this warranty shall continue for a period of 1 year from the date the Government takes possession.

(c) The Contractor shall remedy at the Contractor's expense any failure to conform, or any defect. In addition, the Contractor shall remedy at the Contractor's expense any damage to Government-owned or controlled real or personal property, when that damage is the result of--

(1) The Contractor's failure to conform to contract requirements; or

(2) Any defect of equipment, material, workmanship, or design furnished.

(d) The Contractor shall restore any work damaged in fulfilling the terms and conditions of this clause. The Contractor's warranty with respect to work repaired or replaced will run for 1 year from the date of repair or replacement.

(e) The Contracting Officer shall notify the Contractor, in writing, within a reasonable time after the discovery of any failure, defect, or damage.

(f) If the Contractor fails to remedy any failure, defect, or damage within a reasonable time after receipt of notice, the Government shall have the right to replace, repair, or otherwise remedy the failure, defect, or damage at the Contractor's expense.

(g) With respect to all warranties, express or implied, from subcontractors, manufacturers, or suppliers for work performed and materials furnished under this contract, the Contractor shall--

(1) Obtain all warranties that would be given in normal commercial practice;

(2) Require all warranties to be executed, in writing, for the benefit of the Government, if directed by the Contracting Officer; and

(3) Enforce all warranties for the benefit of the Government, if directed by the Contracting Officer.

(h) In the event the Contractor's warranty under paragraph (b) of this clause has expired, the Government may bring suit at its expense to enforce a subcontractor's, manufacturer's, or supplier's warranty.

(i) Unless a defect is caused by the negligence of the Contractor or subcontractor or supplier at any tier, the Contractor shall not be liable for the repair of any defects of material or design furnished by the Government nor for the repair of any damage that results from any defect in Government-furnished material or design.

CONFORMED

(j) This warranty shall not limit the Government's rights under the Inspection and Acceptance clause of this contract with respect to latent defects, gross mistakes, or fraud.
(End of clause)

52.252-2 CLAUSES INCORPORATED BY REFERENCE (FEB 1998)

This contract incorporates one or more clauses by reference, with the same force and effect as if they were given in full text. Upon request, the Contracting Officer will make their full text available. Also, the full text of a clause may be accessed electronically at this/these address(es):

http://farsite.hill.af.mil/
(End of clause)

52.252-4 ALTERATIONS IN CONTRACT (APR 1984)

Portions of this contract are altered as follows: None
(End of clause)

252.236-7001 CONTRACT DRAWINGS AND SPECIFICATIONS (AUG 2000)

(a) The Government will provide to the Contractor, without charge, one set of contract drawings and specifications, except publications incorporated into the technical provisions by reference, in electronic or paper media as chosen by the Contracting Officer.

(b) The Contractor shall--

(1) Check all drawings furnished immediately upon receipt;

(2) Compare all drawings and verify the figures before laying out the work;

(3) Promptly notify the Contracting Officer of any discrepancies;

(4) Be responsible for any errors that might have been avoided by complying with this paragraph (b); and

(5) Reproduce and print contract drawings and specifications as needed.

(c) In general--

(1) Large-scale drawings shall govern small-scale drawings; and

(2) The Contractor shall follow figures marked on drawings in preference to scale measurements.

(d) Omissions from the drawings or specifications or the misdescription of details of work that are manifestly necessary to carry out the intent of the drawings and specifications, or that are customarily performed, shall not relieve the Contractor from performing such omitted or misdescribed details of the work. The Contractor shall perform such details as if fully and correctly set forth and described in the drawings and specifications.

CONFORMED

(e) The work shall conform to the specifications and the contract drawings.
(End of clause)

252.236-7004 PAYMENT FOR MOBILIZATION AND DEMOBILIZATION (DEC 1991)

(a) The Government will pay all costs for the mobilization and demobilization of all of the Contractor's plant and equipment at the contract lump sum price for this item.

(1) 60 percent of the lump sum price upon completion of the contractor's mobilization at the work site.

(2) The remaining 40 percent upon completion of demobilization.

(b) The Contracting Officer may require the Contractor to furnish cost data to justify this portion of the bid if the Contracting Officer believes that the percentages in paragraphs (a) (1) and (2) of this clause do not bear a reasonable relation to the cost of the work in this contract.

(1) Failure to justify such price to the satisfaction of the Contracting Officer will result in payment, as determined by the Contracting Officer, of --

(i) Actual mobilization costs at completion of mobilization;

(ii) Actual demobilization costs at completion of demobilization; and

(iii) The remainder of this item in the final payment under this contract.

(2) The Contracting Officer's determination of the actual costs in paragraph (b)(1) of this clause is not subject to appeal.

CONFORMED

SECTION 00 73 00
SPECIAL CONTRACT REQUIREMENTS

ATTACHMENTS:

1. GENERAL WAGE DETERMINATION

2. PREAWARD SURVEY - SEE SECTION 00 21 00. THE PREAWARD SURVEY IS ATTACHED FOR INFORMATION PURPOSES ONLY; IT WILL BE REQUIRED ONLY FROM THE LOW BIDDER AFTER BIDOPENING IF THE LOW BIDDER HAS NOT HAD A CONTRACT WITH THE SAN FRANCISCO DISTRICT, SACRAMENTO DISTRICT, OR LOS ANGELES DISTRICT, CORPS OF ENGINEERS, IN THE LAST TWELVE-MONTH PERIOD. IT IS NOT REQUIRED AS PART OF THE BID PACKAGE.

CONFORMED

General Decision Number: CA160029 07/08/2016 CA29

Superseded General Decision Number: CA20150029

State: California

Construction Types: Building, Heavy (Heavy and Dredging) and Highway

Counties: Alameda, Calaveras, Contra Costa, Fresno, Kings, Madera, Mariposa, Merced, Monterey, San Benito, San Francisco, San Joaquin, San Mateo, Santa Clara, Santa Cruz, Stanislaus and Tuolumne Counties in California.

BUILDING CONSTRUCTION PROJECTS; DREDGING PROJECTS (does not include hopper dredge work); HEAVY CONSTRUCTION PROJECTS (does not include water well drilling); HIGHWAY CONSTRUCTION PROJECTS

Note: Under Executive Order (EO) 13658, an hourly minimum wage of $10.15 for calendar year 2016 applies to all contracts subject to the Davis-Bacon Act for which the solicitation was issued on or after January 1, 2015. If this contract is covered by the EO, the contractor must pay all workers in any classification listed on this wage determination at least $10.15 (or the applicable wage rate listed on this wage determination, if it is higher) for all hours spent performing on the contract in calendar year 2016. The EO minimum wage rate will be adjusted annually. Additional information on contractor requirements and worker protections under the EO is available at www.dol.gov/whd/govcontracts.

Modification Number	Publication Date
0	01/08/2016
1	01/15/2016
2	02/26/2016
3	03/04/2016
4	03/18/2016
5	04/29/2016
6	07/08/2016

ASBE0016-004 01/01/2015

AREA 1: CALAVERAS, FRESNO, KINGS, MADERA, MARIPOSA, MERCED, MONTEREY, SAN BENITO, SAN JOAQUIN, SANTA CRUZ, STANISLAUS & TOULMNE COUNTIES

AREA 2: ALAMEDA, CONTRA COSTA, SAN FRANSICO, SAN MATEO & SANTA CLARA COUNTIES

	Rates	Fringes
Asbestos Removal worker/hazardous material handler (Includes preparation, wetting, stripping, removal, scrapping, vacuuming, bagging and disposing of all insulation materials from mechanical systems, whether they contain asbestos or not)		
Area 1	$ 28.30	7.75
Area 2	$ 32.38	7.75

CONFORMED

ASBE0016-008 01/01/2015

AREA 1: ALAMEDA, CONTRA COSTA, MONTEREY, SAN BENITO, SAN FRANSICO, SAN MATEO, SANTA CLARA, & SANTA CRUZ

AREA 2: CALAVERAS, COLUSA, FRESNO, KINGS, MADERA, MARIPOSA, MERCED, SAN JOAQUIN, STANISLAU, & TUOLUMNE

	Rates	Fringes
Asbestos Workers/Insulator (Includes the application of all insulating materials, Protective Coverings, Coatings, and Finishes to all types of mechanical systems)		
Area 1	$ 59.38	19.83
Area 2	$ 44.05	18.62

BOIL0549-001 01/01/2013

AREA 1: ALAMEDA, CONTRA COSTA, SAN FRANCISCO, SAN MATEO & SANTA CLARA COUNTIES

AREA 2: REMAINING COUNTIES

	Rates	Fringes
BOILERMAKER		
Area 1	$ 42.06	33.43
Area 2	$ 38.37	31.32

BRCA0003-001 08/01/2013

	Rates	Fringes
MARBLE FINISHER	$ 28.05	14.01

BRCA0003-003 08/01/2013

	Rates	Fringes
MARBLE MASON	$ 39.30	22.48

---

* BRCA0003-005 05/01/2016

	Rates	Fringes
BRICKLAYER		
(1) Fresno, Kings, Madera, Mariposa, Merced	$ 37.04	21.13
(7) San Francisco, San Mateo	$ 40.89	25.78
(8) Alameda, Contra Costa, San Benito, Santa Clara	$ 42.70	21.67
(9) Calaveras, San Joaquin, Stanislaus, Toulumne	$ 38.21	20.71
(16) Monterey, Santa Cruz	$ 39.51	23.49

CONFORMED

* BRCA0003-008 07/01/2015

	Rates	Fringes
TERRAZZO FINISHER	$ 33.78	15.73
TERRAZZO WORKER/SETTER	$ 41.01	25.53

BRCA0003-011 04/01/2015

AREA 1: Alameda, Contra Costa, Monterey, San Benito, San Francisco, San Mateo, Santa Clara, Santa Cruz

AREA 2: Calaveras, San Joaquin, Stanislaus, Tuolumne

AREA 3: Fresno, Kings, Madera, Mariposa, Merced

	Rates	Fringes
TILE FINISHER		
Area 1	$ 23.49	12.32
Area 2	$ 23.31	12.90
Area 3	$ 23.15	11.96
Tile Layer		
Area 1	$ 41.87	13.55
Area 2	$ 37.71	14.19
Area 3	$ 33.13	13.59

CARP0022-001 07/01/2015

San Francisco County

	Rates	Fringes
Carpenters		
Bridge Builder/Highway Carpenter	$ 42.40	25.98
Hardwood Floorlayer, Shingler, Power Saw Operator, Steel Scaffold & Steel Shoring Erector, Saw Filer	$ 42.55	25.98
Journeyman Carpenter	$ 42.40	25.98
Millwright	$ 42.50	27.38

CARP0034-001 07/01/2014

	Rates	Fringes
Diver		
Assistant Tender, ROV Tender/Technician	$ 39.60	30.73
Diver standby	$ 44.56	30.73
Diver Tender	$ 43.56	30.73
Diver wet	$ 89.12	30.73
Manifold Operator (mixed gas)	$ 48.56	30.73
Manifold Operator (Standby)	$ 43.56	30.73

DEPTH PAY (Surface Diving):
050 to 100 ft $2.00 per foot
101 to 150 ft $3.00 per foot
151 to 220 ft $4.00 per foot

CONFORMED

SATURATION DIVING:
The standby rate shall apply until saturation starts. The saturation diving rate applies when divers are under pressure continuously until work task and decompression are complete. The diver rate shall be paid for all saturation hours.

DIVING IN ENCLOSURES:
Where it is necessary for Divers to enter pipes or tunnels, or other enclosures where there is no vertical ascent, the following premium shall be paid: Distance traveled from entrance 26 feet to 300 feet: $1.00 per foot. When it is necessary for a diver to enter any pipe, tunnel or other enclosure less than 48" in height, the premium will be $1.00 per foot.

WORK IN COMBINATION OF CLASSIFICATIONS:
Employees working in any combination of classifications within the diving crew (except dive supervisor) in a shift are paid in the classification with the highest rate for that shift.

CARP0034-003 07/01/2014

	Rates	Fringes
Piledriver	$ 40.60	30.73

CARP0035-007 07/01/2015

AREA 1: Alameda, Contra Costa, San Francisco, San Mateo, Santa Clara counties

AREA 2: Monterey, San Benito, Santa Cruz Counties

AREA 3: Calaveras, Fresno, Kings, Madera, Mariposa, Merced, San Joaquin, Stanislaus, Tuolumne Counties

	Rates	Fringes
Modular Furniture Installer		
Area 1		
Installer I	$ 24.26	17.67
Installer II	$ 20.83	18.67
Lead Installer	$ 27.71	18.17
Master Installer	$ 31.93	18.17
Area 2		
Installer I	$ 21.61	17.67
Installer II	$ 18.66	17.67
Lead Installer	$ 24.58	18.17
Master Installer	$ 28.21	19.35
Area 3		
Installer I	$ 20.66	18.85
Installer II	$ 17.89	18.85
Lead Installer	$ 23.46	18.17
Master Installer	$ 30.48	17.67

CARP0035-008 08/01/2014

AREA 1: Alameda, Contra Costa, San Francisco, San Mateo, Santa Clara counties

AREA 2: Monterey, San Benito, Santa Cruz Counties

AREA 3: San Joaquin

CONFORMED

AREA 4: Calaveras, Fresno, Kings, Madera, Mariposa, Merced, Stanislaus, Tuolumne Counties

	Rates	Fringes
Drywall Installers/Lathers:		
Area 1	$ 40.35	27.97
Area 2	$ 34.47	27.97
Area 3	$ 34.97	27.97
Area 4	$ 33.62	27.97
Drywall Stocker/Scrapper		
Area 1	$ 20.18	16.30
Area 2	$ 17.24	16.30
Area 3	$ 17.49	16.30
Area 4	$ 16.81	16.30

CARP0152-001 07/01/2014

Contra Costa County

	Rates	Fringes
Carpenters		
Bridge Builder/Highway Carpenter	$ 40.35	27.53
Hardwood Floorlayer, Shingler, Power Saw Operator, Steel Scaffold & Steel Shoring Erector, Saw Filer	$ 40.50	27.53
Journeyman Carpenter	$ 40.35	27.53
Millwright	$ 40.45	29.12

CARP0152-002 07/01/2014

San Joaquin County

	Rates	Fringes
Carpenters		
Bridge Builder/Highway Carpenter	$ 40.35	27.53
Hardwood Floorlayer, Shingler, Power Saw Operator, Steel Scaffold & Steel Shoring Erector, Saw Filer	$ 34.62	27.53
Journeyman Carpenter	$ 34.47	27.53
Millwright	$ 34.97	29.12

CARP0152-004 07/01/2014

Calaveras, Mariposa, Merced, Stanislaus and Tuolumne Counties

	Rates	Fringes
Carpenters		
Bridge Builder/Highway Carpenter	$ 40.35	27.53
Hardwood Floorlayer, Shingler, Power Saw Operator, Steel Scaffold & Steel Shoring Erector, Saw		

CONFORMED

```
     Filer.......................$ 33.27            27.53
     Journeyman Carpenter........$ 33.12            27.53
     Millwright..................$ 35.62            29.12
-----------------------------------------------------------------
 CARP0217-001 07/01/2015

San Mateo County

                                   Rates          Fringes
Carpenters
     Bridge Builder/Highway
     Carpenter...................$ 42.40            25.98
     Hardwood Floorlayer,
     Shingler, Power Saw
     Operator, Steel Scaffold &
     Steel Shoring Erector, Saw
     Filer.......................$ 42.55            25.98
     Journeyman Carpenter........$ 42.40            25.98
     Millwright..................$ 42.50            27.38
-----------------------------------------------------------------
 CARP0405-001 07/01/2015

Santa Clara County

                                   Rates          Fringes
Carpenters
     Bridge Builder/Highway
     Carpenter...................$ 42.40            25.98
     Hardwood Floorlayer,
     Shingler, Power Saw
     Operator, Steel Scaffold &
     Steel Shoring Erector, Saw
     Filer.......................$ 42.55            25.98
     Journeyman Carpenter........$ 42.40            25.98
     Millwright..................$ 42.50            27.38
-----------------------------------------------------------------
 CARP0405-002 07/01/2015

San Benito County

                                   Rates          Fringes
Carpenters
     Bridge Builder/Highway
     Carpenter...................$ 42.40            25.98
     Hardwood Floorlayer,
     Shingler, Power Saw
     Operator, Steel Scaffold &
     Steel Shoring Erector, Saw
     Filer.......................$ 36.58            25.98
     Journeyman Carpenter........$ 26.52            25.98
     Millwright..................$ 39.02            27.38
-----------------------------------------------------------------
 CARP0505-001 07/01/2015

Santa Cruz County

                                   Rates          Fringes
Carpenters
     Bridge Builder/Highway
     Carpenter...................$ 42.40            25.98
     Hardwood Floorlayer,
     Shingler, Power Saw
```

CONFORMED

```
     Operator, Steel Scaffold &
     Steel Shoring Erector, Saw
     Filer.......................$ 36.67            25.98
     Journeyman Carpenter........$ 36.52            25.98
     Millwright..................$ 39.02            27.38
----------------------------------------------------------------
 CARP0605-001 07/01/2015

Monterey County

                                   Rates          Fringes
Carpenters
     Bridge Builder/Highway
     Carpenter...................$ 42.40            25.98
     Hardwood Floorlayer,
     Shingler, Power Saw
     Operator, Steel Scaffold &
     Steel Shoring Erector, Saw
     Filer.......................$ 36.67            25.98
     Journeyman Carpenter........$ 36.52            25.98
     Millwright..................$ 39.02            27.38
----------------------------------------------------------------
 CARP0701-001 07/01/2015

Fresno and Madera Counties

                                   Rates          Fringes
Carpenters
     Bridge Builder/Highway
     Carpenter...................$ 42.40            25.98
     Hardwood Floorlayer,
     Shingler, Power Saw
     Operator, Steel Scaffold &
     Steel Shoring Erector, Saw
     Filer.......................$ 35.32            25.98
     Journeyman Carpenter........$ 35.17            25.98
     Millwright..................$ 37.67            27.38
----------------------------------------------------------------
 CARP0713-001 07/01/2015

Alameda County
                                   Rates          Fringes
Carpenters
     Bridge Builder/Highway
     Carpenter...................$ 42.40            25.98
     Hardwood Floorlayer,
     Shingler, Power Saw
     Operator, Steel Scaffold &
     Steel Shoring Erector, Saw
     Filer.......................$ 42.55            25.98
     Journeyman Carpenter........$ 42.40            25.98
     Millwright..................$ 42.50            27.38
----------------------------------------------------------------
 CARP1109-001 07/01/2014

Kings County
                                   Rates          Fringes
Carpenters
     Bridge Builder/Highway
     Carpenter...................$ 40.35            27.53
     Hardwood Floorlayer,
     Shingler, Power Saw
```

CONFORMED

```
     Operator, Steel Scaffold &
     Steel Shoring Erector, Saw
     Filer.......................$ 33.27            27.53
     Journeyman Carpenter........$ 33.12            27.53
     Millwright..................$ 35.62            29.12
-----------------------------------------------------------------
 ELEC0006-004 12/01/2015

SAN FRANCISCO COUNTY

                                   Rates          Fringes
Sound & Communications
     Installer...................$ 34.82            17.85
     Technician..................$ 39.65            17.99

  SCOPE OF WORK:  Including any data system whose only function is to
  transmit or  receive information; excluding all other data systems or
  multiple systems which include control function or power supply;  inclusion
  or exclusion of terminations and testings of  conductors determined by
  their function; excluding fire alarm  work when installed in raceways
  (including wire and cable  pulling) and when performed on new or major
  remodel building  projects or jobs for which the conductors for the fire
  alarm system are installed in conduit; excluding installation of raceway
  systems, line voltage work, industrial work, life-safety systems (all
  buildings having floors located more than 75' above the lowest floor level
  having building access); excluding energy management systems.

  FOOTNOTE:   Fire alarm work when installed in raceways (including wire and
  cable pulling), on projects which involve new or major remodel building
  construction, for which the conductors for the fire alarm system are
  installed in the conduit, shall be performed by the inside electrician.

-----------------------------------------------------------------
* ELEC0006-007 06/01/2016

SAN FRANCISCO COUNTY

                                   Rates          Fringes

ELECTRICIAN.....................$ 64.00            30.38
-----------------------------------------------------------------
 ELEC0100-002 06/01/2015

FRESNO, KINGS, AND MADERA COUNTIES

                                   Rates          Fringes

ELECTRICIAN.....................$ 34.50            20.09
-----------------------------------------------------------------
 ELEC0100-005 12/01/2015

FRESNO, KINGS, MADERA
                                   Rates          Fringes
Communications System
     Installer...................$ 30.24            16.91
     Technician..................$ 34.43            17.03

SCOPE OF WORK
  Includes the installation testing, service and maintenance, of the
  following systems which utilize the transmission and/or transference of
  voice, sound, vision and digital for commercial, education, security and
  entertainment purposes for the following: TV monitoring and surveillance,
```

CONFORMED

background-foreground music, intercom and telephone interconnect, inventory control systems, microwave transmission, multi-media, multiplex, nurse call system, radio page, school intercom and sound, burglar alarms, and low voltage master clock systems.

A. SOUND AND VOICE TRANSMISSION/TRANSFERENCE SYSTEMS
Background foreground music, Intercom and telephone interconnect systems, Telephone systems Nurse call systems, Radio page systems, School intercom and sound systems, Burglar alarm systems, Low voltage, master clock systems, Multi-media/multiplex systems, Sound and musical entertainment systems, RF systems, Antennas and Wave Guide,

B. FIRE ALARM SYSTEMS Installation, wire pulling and testing

C. TELEVISION AND VIDEO SYSTEMS Television monitoring and surveillance systems Video security systems, Video entertainment systems, Video educational systems, Microwave transmission systems, CATV and CCTV

D. SECURITY SYSTEMS Perimeter security systems Vibration sensor systems Card access systems Access control systems, Sonar/infrared monitoring equipment

E. COMMUNICATIONS SYSTEMS THAT TRANSMIT OR RECEIVE
INFORMATION AND/OR CONTROL SYSTEMS THAT ARE INTRINSIC TO THE ABOVE LISTED SYSTEMS SCADA (Supervisory Control and Data Acquisition) PCM (Pulse Code Modulation) Inventory Control Systems, Digital Data Systems Broadband and Baseband and Carriers Point of Sale Systems, VSAT Data Systems Data Communication Systems RF and Remote Control Systems, Fiber Optic Data Systems

WORK EXCLUDED Raceway systems are not covered (excluding Ladder-Rack for the purpose of the above listed systems). Chases and/or nipples (not to exceed 10 feet) may be installed on open wiring systems. Energy management systems. SCADA (Supervisory Control and Data Acquisition)when not intrinsic to the above listed systems (in the scope). Fire alarm systems when installed in raceways (including wire and cable pulling) shall be performed at the electrician wage rate, when either of the following two (2) conditions apply:
1. The project involves new or major remodel building trades construction.
2. The conductors for the fire alarm system are installed in conduit.

ELEC0234-001 05/25/2015

MONTEREY, SAN BENITO AND SANTA CRUZ COUNTIES

	Rates	Fringes
ELECTRICIAN		
Zone A	$ 42.15	23.36
Zone B	$ 46.37	23.50

Zone A: All of Santa Cruz, Monterey, and San Benito Counties within 25 air miles of Highway 1 and Dolan Road in Moss Landing, and an area extending 5 miles east and west of Highway 101 South to the San Luis Obispo County Line

Zone B: Any area outside of Zone A

ELEC0234-003 12/01/2015

CONFORMED

MONTEREY, SAN BENITO, AND SANTA CRUZ COUNTIES

	Rates	Fringes
Sound & Communications		
Installer	$ 34.32	17.33
Technician	$ 37.94	16.30

SCOPE OF WORK: Including any data system whose only function is to transmit or receive information; excluding all other data systems or multiple systems which include control function or power supply; inclusion or exclusion of terminations and testings of conductors determined by their function; excluding fire alarm work when installed in raceways (including wire and cable pulling) and when performed on new or major remodel building projects or jobs for which the conductors for the fire alarm system are installed in conduit; excluding installation of raceway systems, line voltage work, industrial work, life-safety systems (all buildings having floors located more than 75' above the lowest floor level having building access); excluding energy management systems.

FOOTNOTE: Fire alarm work when installed in raceways (including wire and cable pulling), on projects which involve new or major remodel building construction, for which the conductors for the fire alarm system are installed in the conduit, shall be performed by the inside electrician.

ELEC0302-001 02/09/2016

CONTRA COSTA COUNTY

	Rates	Fringes
CABLE SPLICER	$ 54.17	26.23
ELECTRICIAN	$ 47.76	26.03

ELEC0302-003 12/01/2015

CONTRA COSTA COUNTY

	Rates	Fringes
Sound & Communications		
Installer	$ 34.32	17.03
Technician	$ 39.08	17.17

SCOPE OF WORK: Including any data system whose only function is to transmit or receive information; excluding all other data systems or multiple systems which include control function or power supply; inclusion or exclusion of terminations and testings of conductors determined by their function; excluding fire alarm work when installed in raceways (including wire and cable pulling) and when performed on new or major remodel building projects or jobs for which the conductors for the fire alarm system are installed in conduit; excluding installation of raceway systems, line voltage work, industrial work, life-safety

CONFORMED

systems (all buildings having floors located more than 75' above the lowest floor level having building access); excluding energy management systems.

FOOTNOTE: Fire alarm work when installed in raceways (including wire and cable pulling), on projects which involve new or major remodel building construction, for which the conductors for the fire alarm system are installed in the conduit, shall be performed by the inside electrician.

---

* ELEC0332-001 05/30/2016

SANTA CLARA COUNTY

	Rates	Fringes
CABLE SPLICER	$ 67.87	33.28
ELECTRICIAN	$ 59.02	32.75

FOOTNOTES: Work under compressed air or where gas masks are required, orwork on ladders, scaffolds, stacks, "Bosun's chairs," or other structures and where the workers are not protected by permanent guard rails at a distance of 40 to 60 ft. from the ground or supporting structures: to be paid one and one-half times the straight-time rate of pay. Work on structures of 60 ft. or over (as described above): to be paid twice the straight-time rate of pay.

ELEC0332-003 11/30/2015

SANTA CLARA COUNTY

	Rates	Fringes
Sound & Communications		
Installer	$ 34.32	17.33
Technician	$ 39.08	17.47

SCOPE OF WORK: Including any data system whose only function is to transmit or receive information; excluding all other data systems or multiple systems which include control function or power supply; inclusion or exclusion of terminations and testings of conductors determined by their function; excluding fire alarm work when installed in raceways (including wire and cable pulling) and when performed on new or major remodel building projects or jobs for which the conductors for the fire alarm system are installed in conduit; excluding installation of raceway systems, line voltage work, industrial work, life-safety systems (all buildings having floors located more than 75' above the lowest floor level having building access); excluding energy management systems.

FOOTNOTE: Fire alarm work when installed in raceways (including wire and cable pulling), on projects which involve new or major remodel building construction, for which the conductors for the fire alarm system are installed in the conduit, shall be performed by the inside

CONFORMED

electrician.

ELEC0595-001 06/01/2015

ALAMEDA COUNTY

	Rates	Fringes
CABLE SPLICER	$ 56.70	33.55
ELECTRICIAN	$ 50.40	33.36

ELEC0595-002 06/01/2015

CALAVERAS AND SAN JOAQUIN COUNTIES

	Rates	Fringes
CABLE SPLICER	$ 39.09	25.68
ELECTRICIAN		
(1) Tunnel work	$ 36.49	25.48
(2) All other work	$ 34.75	25.35

ELEC0595-006 06/01/2015

ALAMEDA COUNTY

	Rates	Fringes
Sound & Communications		
Installer	$ 33.32	16.29
Technician	$ 37.94	16.44

SCOPE OF WORK: Including any data system whose only function is to transmit or receive information; excluding all other data systems or multiple systems which include control function or power supply; inclusion or exclusion of terminations and testings of conductors determined by their function; excluding fire alarm work when installed in raceways (including wire and cable pulling) and when performed on new or major remodel building projects or jobs for which the conductors for the fire alarm system are installed in conduit; excluding installation of raceway systems, line voltage work, industrial work, life-safety systems (all buildings having floors located more than 75' above the lowest floor level having building access); excluding energy management systems.

FOOTNOTE: Fire alarm work when installed in raceways (including wire and cable pulling), on projects which involve new or major remodel building construction, for which the conductors for the fire alarm system are installed in the conduit, shall be performed by the inside electrician.

ELEC0595-008 12/01/2014

CALAVERAS AND SAN JOAQUIN COUNTIES

	Rates	Fringes
Communications System		
Installer	$ 29.10	16.18
Technician	$ 33.13	16.30

SCOPE OF WORK: Including any data system whose only function

CONFORMED

is to transmit or receive information; excluding all other data systems or multiple systems which include control function or power supply; inclusion or exclusion of terminations and testings of conductors determined by their function; excluding fire alarm work when installed in raceways (including wire and cable pulling) and when performed on new or major remodel building projects or jobs for which the conductors for the fire alarm system are installed in conduit; excluding installation of raceway systems, line voltage work, industrial work, life-safety systems (all buildings having floors located more than 75' above the lowest floor level having building access); excluding energy management systems.

FOOTNOTE: Fire alarm work when installed in raceways (including wire and cable pulling), on projects which involve new or major remodel building construction, for which the conductors for the fire alarm system are installed in the conduit, shall be performed by the inside electrician.

---

* ELEC0617-001 06/01/2016

SAN MATEO COUNTY

	Rates	Fringes
ELECTRICIAN	$ 55.30	32.19

ELEC0617-003 12/01/2015

SAN MATEO COUNTY

	Rates	Fringes
Sound & Communications		
Installer	$ 34.32	17.33
Technician	$ 39.08	17.47

SCOPE OF WORK: Including any data system whose only function is to transmit or receive information; excluding all other data systems or multiple systems which include control function or power supply; inclusion or exclusion of terminations and testings of conductors determined by their function; excluding fire alarm work when installed in raceways (including wire and cable pulling) and when performed on new or major remodel building projects or jobs for which the conductors for the fire alarm system are installed in conduit; excluding installation of raceway systems, line voltage work, industrial work, life-safety systems (all buildings having floors located more than 75' above the lowest floor level having building access); excluding energy management systems.

FOOTNOTE: Fire alarm work when installed in raceways (including wire and cable pulling), on projects which involve new or major remodel building construction, for which the conductors for the fire alarm system are installed in the conduit, shall be performed by the inside electrician.

CONFORMED

* ELEC0684-001 06/01/2016

MARIPOSA, MERCED, STANISLAUS AND TUOLUMNE COUNTIES

	Rates	Fringes
ELECTRICIAN	$ 36.40	21.23

CABLE SPLICER = 110% of Journeyman Electrician

ELEC0684-004 12/01/2015

MARIPOSA, MERCED, STANISLAUS AND TUOLUMNE COUNTIES

	Rates	Fringes
Communications System		
Installer	$ 28.22	16.26
Technician	$ 32.13	16.26

SCOPE OF WORK: Including any data system whose only function is to transmit or receive information; excluding all other data systems or multiple systems which include control function or power supply; inclusion or exclusion of terminations and testings of conductors determined by their function; excluding fire alarm work when installed in raceways (including wire and cable pulling) and when performed on new or major remodel building projects or jobs for which the conductors for the fire alarm system are installed in conduit; excluding installation of raceway systems, line voltage work, industrial work, life-safety systems (all buildings having floors located more than 75' above the lowest floor level having building access); excluding energy management systems.

FOOTNOTE: Fire alarm work when installed in raceways (including wire and cable pulling), on projects which involve new or major remodel building construction, for which the conductors for the fire alarm system are installed in the conduit, shall be performed by the inside electrician.

ELEC1245-001 06/01/2015

	Rates	Fringes
LINE CONSTRUCTION		
(1) Lineman; Cable splicer	$ 52.85	15.53
(2) Equipment specialist (operates crawler tractors, commercial motor vehicles, backhoes, trenchers, cranes (50 tons and below), overhead & underground distribution line equipment)	$ 42.21	14.32
(3) Groundman	$ 32.28	14.03
(4) Powderman	$ 47.19	14.60

HOLIDAYS: New Year's Day, M.L. King Day, Memorial Day, Independence Day, Labor Day, Veterans Day, Thanksgiving Day and day after Thanksgiving, Christmas Day

---

CONFORMED

```
 ELEV0008-001 01/01/2015
                                  Rates          Fringes

ELEVATOR MECHANIC................$ 60.39            28.38

FOOTNOTE:
  PAID VACATION:  Employer contributes 8% of regular hourly
  rate as vacation pay credit for employees with more than 5
  years of service, and 6% for 6 months to 5 years of service.
  PAID HOLIDAYS: New Years Day, Memorial Day, Independence Day,
  Labor Day, Veterans Day, Thanksgiving Day, Friday after
  Thanksgiving, and Christmas Day.

----------------------------------------------------------------
 ENGI0003-008 07/01/2013
                                  Rates          Fringes
Dredging: (DREDGING:
CLAMSHELL & DIPPER DREDGING;
HYDRAULIC SUCTION DREDGING:)
     AREA 1:
      (1) Leverman...............$ 40.53            27.81
      (2) Dredge Dozer; Heavy
      duty repairman.............$ 35.57            27.81
      (3) Booster Pump
      Operator; Deck
      Engineer; Deck mate;
      Dredge Tender; Winch
      Operator...................$ 34.45            27.81
      (4) Bargeman; Deckhand;
      Fireman; Leveehand; Oiler..$ 31.15            27.81
     AREA 2:
      (1) Leverman...............$ 42.53            27.81
      (2) Dredge Dozer; Heavy
      duty repairman.............$ 37.57            27.81
      (3) Booster Pump
      Operator; Deck
      Engineer; Deck mate;
      Dredge Tender; Winch
      Operator...................$ 36.45            27.81
      (4) Bargeman; Deckhand;
      Fireman; Leveehand; Oiler..$ 33.15            27.81

AREA DESCRIPTIONS

  AREA 1: ALAMEDA,BUTTE, CONTRA COSTA, KINGS, MARIN, MERCED, NAPA,
  SACRAMENTO, SAN BENITO, SAN FRANCISCO, SAN JOAQUIN, SAN MATEO, SANTA CLARA,
  SANTA CRUZ, SOLANO, STANISLAUS, SUTTER, YOLO, AND YUBA COUNTIES

AREA 2:  MODOC COUNTY

  THE REMAINGING COUNTIES ARE SPLIT BETWEEN AREA 1 AND AREA 2
  AS NOTED BELOW:

ALPINE COUNTY:
Area 1:  Northernmost part
Area 2:  Remainder

CALAVERAS COUNTY:
Area 1: Remainder
Area 2: Eastern part

COLUSA COUNTY:
```

CONFORMED

Area 1: Eastern part
Area 2: Remainder

ELDORADO COUNTY:
Area 1: North Central part
Area 2: Remainder

FRESNO COUNTY:
Area 1: Remainder
Area 2: Eastern part

GLENN COUNTY:
Area 1: Eastern part
Area 2: Remainder

LASSEN COUNTY:
Area 1: Western part along the Southern portion of border with Shasta County
Area 2: Remainder

MADERA COUNTY:
Area 1: Except Eastern part
Area 2: Eastern part

MARIPOSA COUNTY
Area 1: Except Eastern part
Area 2: Eastern part

MONTERREY COUNTY
Area 1: Except Southwestern part
Area 2: Southwestern part

NEVADA COUNTY:
Area 1: All but the Northern portion along the border of Sierra County
Area 2: Remainder

PLACER COUNTY:
Area 1: Al but the Central portion
Area 2: Remainder

PLUMAS COUNTY:
Area 1: Western portion
Area 2: Remainder

SHASTA COUNTY:
Area 1: All but the Northeastern corner
Area 2: Remainder

SIERRA COUNTY:
Area 1: Western part
Area 2: Remainder

SISKIYOU COUNTY:
Area 1: Central part
Area 2: Remainder

SONOMA COUNTY:
Area 1: All but the Northwestern corner
Area 2: Remainder

TEHAMA COUNTY:

CONFORMED

Area 1: All but the Western border with Mendocino & Trinity Counties
Area 2: Remainder

TRINITY COUNTY:
Area 1: East Central part and the Northeastern border with Shasta County
Area 2: Remainder

TUOLUMNE COUNTY:
Area 1: Except Eastern part
Area 2: Eastern part

ENGI0003-018 06/30/2014

"AREA 1" WAGE RATES ARE LISTED BELOW

"AREA 2" RECEIVES AN ADDITIONAL $2.00 PER HOUR ABOVE AREA 1 RATES.

SEE AREA DEFINITIONS BELOW

	Rates	Fringes
OPERATOR: Power Equipment (AREA 1:)		
GROUP 1	$ 39.85	27.44
GROUP 2	$ 38.32	27.44
GROUP 3	$ 36.84	27.44
GROUP 4	$ 35.46	27.44
GROUP 5	$ 34.19	27.44
GROUP 6	$ 32.87	27.44
GROUP 7	$ 31.73	27.44
GROUP 8	$ 30.59	27.44
GROUP 8-A	$ 28.38	27.44
OPERATOR: Power Equipment (Cranes and Attachments - AREA 1:)		
GROUP 1		
Cranes	$ 40.73	27.44
Oiler	$ 33.76	27.44
Truck crane oiler	$ 37.33	27.44
GROUP 2		
Cranes	$ 38.97	27.44
Oiler	$ 33.50	27.44
Truck crane oiler	$ 37.04	27.44
GROUP 3		
Cranes	$ 37.23	27.44
Hydraulic	$ 32.87	27.44
Oiler	$ 33.26	27.44
Truck Crane Oiler	$ 36.77	27.44
GROUP 4		
Cranes	$ 34.19	27.44
OPERATOR: Power Equipment (Piledriving - AREA 1:)		
GROUP 1		
Lifting devices	$ 41.07	27.44
Oiler	$ 31.81	27.44
Truck crane oiler	$ 34.09	27.44
GROUP 2		
Lifting devices	$ 39.25	27.44
Oiler	$ 31.54	27.44
Truck Crane Oiler	$ 33.84	27.44

CONFORMED

```
     GROUP 3
      Lifting devices............$ 37.57            27.44
      Oiler......................$ 31.32            27.44
      Truck Crane Oiler..........$ 33.55            27.44
     GROUP 4
      Lifting devices............$ 35.80            27.44
     GROUP 5
      Lifting devices............$ 34.50            27.44
     GROUP 6
      Lifting devices............$ 33.16            27.44
OPERATOR:  Power Equipment
(Steel Erection - AREA 1:)
     GROUP 1
      Cranes.....................$ 41.70            27.44
      Oiler......................$ 32.15            27.44
      Truck Crane Oiler..........$ 34.38            27.44
     GROUP 2
      Cranes.....................$ 39.93            27.44
      Oiler......................$ 31.88            27.44
      Truck Crane Oiler..........$ 34.16            27.44
     GROUP 3
      Cranes.....................$ 38.45            27.44
      Hydraulic..................$ 32.67            27.44
      Oiler......................$ 31.66            27.44
      Truck Crane Oiler..........$ 33.89            27.44
     GROUP 4
      Cranes.....................$ 36.43            27.44
     GROUP 5
      Cranes.....................$ 35.13            27.44
OPERATOR:  Power Equipment
(Tunnel and Underground Work
- AREA 1:)
     SHAFTS, STOPES, RAISES:
      GROUP 1....................$ 35.95            27.44
      GROUP 1-A..................$ 38.32            27.44
      GROUP 2....................$ 34.59            27.44
      GROUP 3....................$ 33.36            27.44
      GROUP 4....................$ 32.22            27.44
      GROUP 5....................$ 31.08            27.44
     UNDERGROUND:
      GROUP 1....................$ 35.85            27.44
      GROUP 1-A..................$ 38.32            27.44
      GROUP 2....................$ 34.59            27.44
      GROUP 3....................$ 33.26            27.44
      GROUP 4....................$ 32.12            27.44
      GROUP 5....................$ 30.98            27.44
```

FOOTNOTE: Work suspended by ropes or cables, or work on a Yo-Yo Cat: $.60 per hour additional.

POWER EQUIPMENT OPERATOR CLASSIFICATIONS

GROUP 1: Operator of helicopter (when used in erection work); Hydraulic excavator, 7 cu. yds. and over; Power shovels, over 7 cu. yds.

GROUP 2: Highline cableway; Hydraulic excavator, 3-1/2 cu. yds. up to 7 cu. yds.; Licensed construction work boat operator, on site; Power blade operator (finish); Power shovels, over 1 cu. yd. up to and including 7 cu. yds. m.r.c.

GROUP 3: Asphalt milling machine; Cable backhoe; Combination

CONFORMED

backhoe and loader over 3/4 cu. yds.; Continuous flight tie back machine assistant to engineer or mechanic; Crane mounted continuous flight tie back machine, tonnage to apply; Crane mounted drill attachment, tonnage to apply; Dozer, slope brd; Gradall; Hydraulic excavator, up to 3 1/2 cu. yds.; Loader 4 cu. yds. and over; Long reach excavator; Multiple engine scraper (when used as push pull); Power shovels, up to and including 1 cu. yd.; Pre-stress wire wrapping machine; Side boom cat, 572 or larger; Track loader 4 cu. yds. and over; Wheel excavator (up to and including 750 cu. yds. per hour)

GROUP 4: Asphalt plant engineer/box person; Chicago boom; Combination backhoe and loader up to and including 3/4 cu. yd.; Concrete batch plant (wet or dry); Dozer and/or push cat; Pull- type elevating loader; Gradesetter, grade checker (GPS, mechanical or otherwise); Grooving and grinding machine; Heading shield operator; Heavy-duty drilling equipment, Hughes, LDH, Watson 3000 or similar; Heavy-duty repairperson and/or welder; Lime spreader; Loader under 4 cu. yds.; Lubrication and service engineer (mobile and grease rack); Mechanical finishers or spreader machine (asphalt, Barber-Greene and similar); Miller Formless M-9000 slope paver or similar; Portable crushing and screening plants; Power blade support; Roller operator, asphalt; Rubber-tired scraper, self-loading (paddle-wheels, etc.); Rubber- tired earthmoving equipment (scrapers); Slip form paver (concrete); Small tractor with drag; Soil stabilizer (P & H or equal); Spider plow and spider puller; Tubex pile rig; Unlicensed constuction work boat operator, on site; Timber skidder; Track loader up to 4 yds.; Tractor-drawn scraper; Tractor, compressor drill combination; Welder; Woods-Mixer (and other similar Pugmill equipment)

GROUP 5: Cast-in-place pipe laying machine; Combination slusher and motor operator; Concrete conveyor or concrete pump, truck or equipment mounted; Concrete conveyor, building site; Concrete pump or pumpcrete gun; Drilling equipment, Watson 2000, Texoma 700 or similar; Drilling and boring machinery, horizontal (not to apply to waterliners, wagon drills or jackhammers); Concrete mixer/all; Person and/or material hoist; Mechanical finishers (concrete) (Clary, Johnson, Bidwell Bridge Deck or similar types); Mechanical burm, curb and/or curb and gutter machine, concrete or asphalt); Mine or shaft hoist; Portable crusher; Power jumbo operator (setting slip-forms, etc., in tunnels); Screed (automatic or manual); Self-propelled compactor with dozer; Tractor with boom D6 or smaller; Trenching machine, maximum digging capacity over 5 ft. depth; Vermeer T-600B rock cutter or similar

GROUP 6: Armor-Coater (or similar); Ballast jack tamper; Boom- type backfilling machine; Assistant plant engineer; Bridge and/or gantry crane; Chemical grouting machine, truck-mounted; Chip spreading machine operator; Concrete saw (self-propelled unit on streets, highways, airports and canals); Deck engineer; Drilling equipment Texoma 600, Hughes 200 Series or similar up to and including 30 ft. m.r.c.; Drill doctor; Helicopter radio operator; Hydro-hammer or similar; Line master; Skidsteer loader, Bobcat larger than 743 series or similar (with

CONFORMED

attachments); Locomotive; Lull hi-lift or similar; Oiler, truck mounted equipment; Pavement breaker, truck-mounted, with compressor combination; Paving fabric installation and/or laying machine; Pipe bending machine (pipelines only); Pipe wrapping machine (tractor propelled and supported); Screed (except asphaltic concrete paving); Self- propelled pipeline wrapping machine; Tractor; Self-loading chipper; Concrete barrier moving machine

GROUP 7: Ballast regulator; Boom truck or dual-purpose A-frame truck, non-rotating - under 15 tons; Cary lift or similar; Combination slurry mixer and/or cleaner; Drilling equipment, 20 ft. and under m.r.c.; Firetender (hot plant); Grouting machine operator; Highline cableway signalperson; Stationary belt loader (Kolman or similar); Lift slab machine (Vagtborg and similar types); Maginnes internal full slab vibrator; Material hoist (1 drum); Mechanical trench shield; Pavement breaker with or without compressor combination); Pipe cleaning machine (tractor propelled and supported); Post driver; Roller (except asphalt); Chip Seal; Self-propelled automatically applied concrete curing mahcine (on streets, highways, airports and canals); Self-propelled compactor (without dozer); Signalperson; Slip-form pumps (lifting device for concrete forms); Tie spacer; Tower mobile; Trenching machine, maximum digging capacity up to and including 5 ft. depth; Truck- type loader

GROUP 8: Bit sharpener; Boiler tender; Box operator; Brakeperson; Combination mixer and compressor (shotcrete/gunite); Compressor operator; Deckhand; Fire tender; Forklift (under 20 ft.); Generator; Gunite/shotcrete equipment operator; Hydraulic monitor; Ken seal machine (or similar); Mixermobile; Oiler; Pump operator; Refrigeration plant; Reservoir-debris tug (self-propelled floating); Ross Carrier (construction site); Rotomist operator; Self-propelled tape machine; Shuttlecar; Self-propelled power sweeper operator (includes vacuum sweeper); Slusher operator; Surface heater; Switchperson; Tar pot firetender; Tugger hoist, single drum; Vacuum cooling plant; Welding machine (powered other than by electricity)

GROUP 8-A: Elevator operator; Skidsteer loader-Bobcat 743 series or smaller, and similar (without attachments); Mini excavator under 25 H.P. (backhoe-trencher); Tub grinder wood chipper

---

ALL CRANES AND ATTACHMENTS

GROUP 1: Clamshell and dragline over 7 cu. yds.; Crane, over 100 tons; Derrick, over 100 tons; Derrick barge pedestal-mounted, over 100 tons; Self-propelled boom-type lifting device, over 100 tons

GROUP 2: Clamshell and dragline over 1 cu. yd. up to and including 7 cu. yds.; Crane, over 45 tons up to and including 100 tons; Derrick barge, 100 tons and under; Self-propelled boom-type lifting device, over 45 tons; Tower crane

GROUP 3: Clamshell and dragline up to and including 1 cu. yd.; Cranes 45 tons and under; Self-propelled boom-type lifting device 45 tons and under;

CONFORMED

GROUP 4: Boom Truck or dual purpose A-frame truck, non-rotating over 15 tons; Truck-mounted rotating telescopic boom type lifting device, Manitex or similar (boom truck) over 15 tons; Truck-mounted rotating telescopic boom type lifting device, Manitex or similar (boom truck) - under 15 tons;

PILEDRIVERS

GROUP 1: Derrick barge pedestal mounted over 100 tons; Clamshell over 7 cu. yds.; Self-propelled boom-type lifting device over 100 tons; Truck crane or crawler, land or barge mounted over 100 tons

GROUP 2: Derrick barge pedestal mounted 45 tons to and including 100 tons; Clamshell up to and including 7 cu. yds.; Self-propelled boom-type lifting device over 45 tons; Truck crane or crawler, land or barge mounted, over 45 tons up to and including 100 tons; Fundex F-12 hydraulic pile rig

GROUP 3: Derrick barge pedestal mounted under 45 tons; Self-propelled boom-type lifting device 45 tons and under; Skid/scow piledriver, any tonnage; Truck crane or crawler, land or barge mounted 45 tons and under

GROUP 4: Assistant operator in lieu of assistant to engineer; Forklift, 10 tons and over; Heavy-duty repairperson/welder

GROUP 5: Deck engineer

GROUP 6: Deckhand; Fire tender

STEEL ERECTORS

GROUP 1: Crane over 100 tons; Derrick over 100 tons; Self-propelled boom-type lifting device over 100 tons

GROUP 2: Crane over 45 tons to 100 tons; Derrick under 100 tons; Self-propelled boom-type lifting device over 45 tons to 100 tons; Tower crane

GROUP 3: Crane, 45 tons and under; Self-propelled boom-type lifting device, 45 tons and under

GROUP 4: Chicago boom; Forklift, 10 tons and over; Heavy-duty repair person/welder

GROUP 5: Boom cat

TUNNEL AND UNDERGROUND WORK

GROUP 1-A: Tunnel bore machine operator, 20' diameter or more

GROUP 1: Heading shield operator; Heavy-duty repairperson; Mucking machine (rubber tired, rail or track type); Raised bore operator (tunnels); Tunnel mole bore operator

GROUP 2: Combination slusher and motor operator; Concrete pump or pumpcrete

CONFORMED

gun; Power jumbo operator

GROUP 3: Drill doctor; Mine or shaft hoist

GROUP 4: Combination slurry mixer cleaner; Grouting Machine operator; Motorman

GROUP 5: Bit Sharpener; Brakeman; Combination mixer and compressor (gunite); Compressor operator; Oiler; Pump operator; Slusher operator

---

AREA DESCRIPTIONS:

POWER EQUIPMENT OPERATORS, CRANES AND ATTACHMENTS, TUNNEL AND UNDERGROUND
[These areas do not apply to Piledrivers and Steel Erectors]

AREA 1: ALAMEDA, BUTTE, CONTRA COSTA, KINGS, MARIN, MERCED, NAPA, SACRAMENTO, SAN BENITO, SAN FRANCISCO, SAN JOAQUIN, SAN MATEO, SANTA CLARA, SANTA CRUZ, SOLANO, STANISLAUS, SUTTER, YOLO, AND YUBA COUNTIES

AREA 2 - MODOC COUNTY

THE REMAINING COUNTIES ARE SPLIT BETWEEN AREA 1 AND AREA 2 AS NOTED BELOW:

ALPINE COUNTY:
Area 1: Northernmost part
Area 2: Remainder

CALAVERAS COUNTY:
Area 1: Except Eastern part
Area 2: Eastern part

COLUSA COUNTY:
Area 1: Eastern part
Area 2: Remainder

DEL NORTE COUNTY:
Area 1: Extreme Southwestern corner
Area 2: Remainder

ELDORADO COUNTY:
Area 1: North Central part
Area 2: Remainder

FRESNO COUNTY
Area 1: Except Eastern part
Area 2: Eastern part

GLENN COUNTY:
Area 1: Eastern part
Area 2: Remainder

HUMBOLDT COUNTY:
Area 1: Except Eastern and Southwestern parts
Area 2: Remainder

LAKE COUNTY:
Area 1: Southern part
Area 2: Remainder

LASSEN COUNTY:

CONFORMED

Area 1: Western part along the Southern portion of border with Shasta County
Area 2: Remainder

MADERA COUNTY
Area 1: Remainder
Area 2: Eastern part

MARIPOSA COUNTY
Area 1: Remainder
Area 2: Eastern part

MENDOCINO COUNTY:
Area 1: Central and Southeastern parts
Area 2: Remainder

MONTEREY COUNTY
Area 1: Remainder
Area 2: Southwestern part

NEVADA COUNTY:
Area 1: All but the Northern portion along the border of Sierra County
Area 2: Remainder

PLACER COUNTY:
Area 1: All but the Central portion
Area 2: Remainder

PLUMAS COUNTY:
Area 1: Western portion
Area 2: Remainder

SHASTA COUNTY:
Area 1: All but the Northeastern corner
Area 2: Remainder

SIERRA COUNTY:
Area 1: Western part
Area 2: Remainder

SISKIYOU COUNTY:
Area 1: Central part
Area 2: Remainder

SONOMA COUNTY:
Area 1: All but the Northwestern corner
Area 2: Reaminder

TEHAMA COUNTY:
Area 1: All but the Western border with mendocino & Trinity Counties
Area 2: Remainder

TRINITY COUNTY:
Area 1: East Central part and the Northeaster border with Shasta County
Area 2: Remainder

TULARE COUNTY;
Area 1: Remainder
Area 2: Eastern part

CONFORMED

TUOLUMNE COUNTY:
Area 1: Remainder
Area 2: Eastern Part

ENGI0003-019 07/01/2013

SEE AREA DESCRIPTIONS BELOW

	Rates	Fringes
OPERATOR: Power Equipment (LANDSCAPE WORK ONLY)		
GROUP 1		
AREA 1	$ 29.64	25.71
AREA 2	$ 31.64	25.71
GROUP 2		
AREA 1	$ 26.04	25.71
AREA 2	$ 28.04	25.71
GROUP 3		
AREA 1	$ 21.43	25.71
AREA 2	$ 23.43	25.71

GROUP DESCRIPTIONS:

GROUP 1: Landscape Finish Grade Operator: All finish grade work regardless of equipment used, and all equipment with a rating more than 65 HP.

GROUP 2: Landscape Operator up to 65 HP: All equipment with a manufacturer's rating of 65 HP or less except equipment covered by Group 1 or Group 3. The following equipment shall be included except when used for finish work as long as manufacturer's rating is 65 HP or less: A-Frame and Winch Truck, Backhoe, Forklift, Hydragraphic Seeder Machine, Roller, Rubber-Tired and Track Earthmoving Equipment, Skiploader, Straw Blowers, and Trencher 31 HP up to 65 HP.

GROUP 3: Landscae Utility Operator: Small Rubber-Tired Tractor, Trencher Under 31 HP.

AREA DESCRIPTIONS:

AREA 1: ALAMEDA, BUTTE, CONTRA COSTA, KINGS, MARIN, MERCED, NAPA, SACRAMENTO, SAN BENITO, SAN FRANCISCO, SAN JOAQUIN, SAN MATEO, SANTA CLARA, SANTA CRUZ, SOLANO, STANISLAUS, SUTTER, YOLO, AND YUBA COUNTIES

AREA 2 - MODOC COUNTY

THE REMAINING COUNTIES ARE SPLIT BETWEEN AREA 1 AND AREA 2 AS NOTED BELOW:

ALPINE COUNTY:
Area 1: Northernmost part
Area 2: Remainder

CALAVERAS COUNTY:
Area 1: Except Eastern part
Area 2: Eastern part

COLUSA COUNTY:
Area 1: Eastern part
Area 2: Remainder

CONFORMED

DEL NORTE COUNTY:
Area 1: Extreme Southwestern corner
Area 2: Remainder

ELDORADO COUNTY:
Area 1: North Central part
Area 2: Remainder

FRESNO COUNTY
Area 1: Except Eastern part
Area 2: Eastern part

GLENN COUNTY:
Area 1: Eastern part
Area 2: Remainder

HUMBOLDT COUNTY:
Area 1: Except Eastern and Southwestern parts
Area 2: Remainder

LAKE COUNTY:
Area 1: Southern part
Area 2: Remainder

LASSEN COUNTY:
Area 1: Western part along the Southern portion of border with Shasta County
Area 2: Remainder

MADERA COUNTY
Area 1: Remainder
Area 2: Eastern part

MARIPOSA COUNTY
Area 1: Remainder
Area 2: Eastern part

MENDOCINO COUNTY:
Area 1: Central and Southeastern parts
Area 2: Remainder

MONTEREY COUNTY
Area 1: Remainder
Area 2: Southwestern part

NEVADA COUNTY:
Area 1: All but the Northern portion along the border of Sierra County
Area 2: Remainder

PLACER COUNTY:
Area 1: All but the Central portion
Area 2: Remainder

PLUMAS COUNTY:
Area 1: Western portion
Area 2: Remainder

SHASTA COUNTY:
Area 1: All but the Northeastern corner
Area 2: Remainder

CONFORMED

SIERRA COUNTY:
Area 1: Western part
Area 2: Remainder

SISKIYOU COUNTY:
Area 1: Central part
Area 2: Remainder

SONOMA COUNTY:
Area 1: All but the Northwestern corner
Area 2: Reaminder

TEHAMA COUNTY:
Area 1: All but the Western border with mendocino & Trinity Counties
Area 2: Remainder

TRINITY COUNTY:
Area 1: East Central part and the Northeaster border with Shasta County
Area 2: Remainder

TULARE COUNTY;
Area 1: Remainder
Area 2: Eastern part

TUOLUMNE COUNTY:
Area 1: Remainder
Area 2: Eastern Part

IRON0377-002 01/01/2016

	Rates	Fringes
Ironworkers:		
Fence Erector	$ 27.58	20.64
Ornamental, Reinforcing and Structural	$ 34.00	29.20

PREMIUM PAY:

$6.00 additional per hour at the following locations:

China Lake Naval Test Station, Chocolate Mountains Naval Reserve-Niland, Edwards AFB, Fort Irwin Military Station, Fort Irwin Training Center-Goldstone, San Clemente Island, San Nicholas Island, Susanville Federal Prison, 29 Palms - Marine Corps, U.S. Marine Base - Barstow, U.S. Naval Air Facility - Sealey, Vandenberg AFB

$4.00 additional per hour at the following locations:

Army Defense Language Institute - Monterey, Fallon Air Base, Naval Post Graduate School - Monterey, Yermo Marine Corps Logistics Center

$2.00 additional per hour at the following locations:

Port Hueneme, Port Mugu, U.S. Coast Guard Station - Two Rock

---

* LABO0067-002 06/27/2016

AREA "A" - ALAMEDA, CONTRA COSTA, MARIN, SAN FRANCISCO, SAN MATEO AND SANTA CLARA COUNTIES

CONFORMED

AREA "B" - ALPINE, AMADOR, BUTTE, CALAVERAS, COLUSA, DEL NORTE, EL DORADO, FRESNO, GLENN, HUMBOLDT, KINGS, LAKE, LASSEN, MADERA, MARIPOSA, MENDOCINO, MERCED, MODOC, MONTEREY, NAPA, NEVADA, PLACER, PLUMAS, SACRAMENTO, SAN BENITO, SAN JOAQUIN, SANTA CRUZ, SHASTA, SIERRA, SISKIYOU, SOLANO, SONOMA, STANISLAUS, SUTTER, TEHAMA, TRINITY, TULARE, TUOLUMNE, YOLO AND YUBA COUNTIES

	Rates	Fringes
Asbestos Removal Laborer		
Areas A & B	$ 20.66	10.02
LABORER (Lead Removal)		
Area A	$ 30.00	21.34
Area B	$ 29.00	21.34

ASBESTOS REMOVAL-SCOPE OF WORK: Site mobilization; initial site clean-up; site preparation; removal of asbestos-containing materials from walls and ceilings; or from pipes, boilers and mechanical systems only if they are being scrapped; encapsulation, enclosure and disposal of asbestos-containing materials by hand or with equipment or machinery; scaffolding; fabrication of temporary wooden barriers; and assembly of decontamination stations.

LABO0067-006 06/30/2014

AREA "A" - ALAMEDA, CONTRA COSTA, MARIN, SAN FRANCISCO, SAN MATEO AND SANTA CLARA COUNTIES

AREA "B" - ALPINE, AMADOR, BUTTE, CALAVERAS, COLUSA, EL DORADO, FRESNO, GLENN, KINGS, LASSEN, MADERA, MARIPOSA, MERCED, MODOC, MONTEREY, NAPA, NEVADA, PLACER, PLUMAS, SACRAMENTO, SAN BENITO, SAN JOAQUIN, SANTA CRUZ, SHASTA, SIERRA, SISKIYOU, SOLANO, SONOMA, STANISLAUS, SUTTER, TEHAMA, TRINITY, TULARE, TUOLUMNE, YOLO AND YUBA COUNTIES

	Rates	Fringes
Laborers: (CONSTRUCTION CRAFT LABORERS - AREA A:)		
Construction Specialist Group	$ 29.09	18.66
GROUP 1	$ 28.39	18.66
GROUP 1-a	$ 28.61	18.66
GROUP 1-c	$ 28.44	18.66
GROUP 1-e	$ 28.94	18.66
GROUP 1-f	$ 28.97	18.66
GROUP 1-g (Contra Costa County)	$ 28.59	18.66
GROUP 2	$ 28.24	18.66
GROUP 3	$ 28.14	18.66
GROUP 4	$ 21.83	18.66

See groups 1-b and 1-d under laborer classifications.

Laborers: (CONSTRUCTION CRAFT LABORERS - AREA B:)		
Construction Specialist Group	$ 28.09	18.66
GROUP 1	$ 27.39	18.66
GROUP 1-a	$ 27.61	18.66
GROUP 1-c	$ 27.44	18.66
GROUP 1-e	$ 27.94	18.66
GROUP 1-f	$ 27.97	18.66

CONFORMED

```
     GROUP 2.....................$ 27.24            18.66
     GROUP 3.....................$ 27.14            18.66
     GROUP 4.....................$ 20.83            18.66
  See groups 1-b and 1-d under laborer classifications.
Laborers: (GUNITE - AREA A:)
     GROUP 1.....................$ 29.35            18.66
     GROUP 2.....................$ 28.85            18.66
     GROUP 3.....................$ 28.26            18.66
     GROUP 4.....................$ 28.14            18.66
Laborers: (GUNITE - AREA B:)
     GROUP 1.....................$ 28.35            18.66
     GROUP 2.....................$ 27.85            18.66
     GROUP 3.....................$ 27.26            18.66
     GROUP 4.....................$ 27.14            18.66
Laborers: (WRECKING - AREA A:)
     GROUP 1.....................$ 28.39            18.66
     GROUP 2.....................$ 28.24            18.66
Laborers: (WRECKING - AREA B:)
     GROUP 1.....................$ 27.39            18.66
     GROUP 2.....................$ 27.24            18.66
Landscape Laborer (GARDENERS,
HORTICULTURAL & LANDSCAPE
LABORERS - AREA A:)
     (1) New Construction........$ 28.14            18.66
     (2) Establishment Warranty
     Period......................$ 21.83            18.66
Landscape Laborer (GARDENERS,
HORTICULURAL & LANDSCAPE
LABORERS - AREA B:)
     (1) New Construction........$ 27.14            18.66
     (2) Establishment Warranty
     Period......................$ 20.83            18.66

FOOTNOTES:
  Laborers working off or with or from bos'n chairs, swinging
  scaffolds, belts shall receive $0.25 per hour above the
  applicable wage rate.  This shall not apply to workers
  entitled to receive the wage rate set forth in Group 1-a
  below.

  ----------------------------------------------------------

LABORER CLASSIFICATIONS

  CONSTRUCTION SPECIALIST GROUP: Asphalt ironer and raker;
  Chainsaw; Laser beam in connection with laborers' work;
  Cast-in- place manhole form setter; Pressure pipelayer;
  Davis trencher - 300 or similar type (and all small
  trenchers); Blaster; Diamond driller; Multiple unit drill;
  Hydraulic drill

  GROUP 1: Asphalt spreader boxes (all types); Barko, Wacker
  and similar type tampers; Buggymobile; Caulker, bander,
  pipewrapper, conduit layer, plastic pipelayer; Certified
  hazardous waste worker including Leade Abatement;
  Compactors of all types; Concrete and magnesite mixer, 1/2
  yd. and under; Concrete pan work; Concrete sander; Concrete
  saw; Cribber and/or shoring; Cut granite curb setter;
  Dri-pak-it machine; Faller, logloader and bucker; Form
  raiser, slip forms; Green cutter; Headerboard, Hubsetter,
  aligner, by any method; High pressure blow pipe (1-1/2" or
  over, 100 lbs. pressure/over); Hydro seeder and similar
```

CONFORMED

type; Jackhammer operator; Jacking of pipe over 12 inches; Jackson and similar type compactor; Kettle tender, pot and worker applying asphalt, lay-kold, creosote, lime, caustic and similar type materials (applying means applying, dipping or handling of such materials); Lagging, sheeting, whaling, bracing, trenchjacking, lagging hammer; Magnesite, epoxyresin, fiberglass, mastic worker (wet or dry); No joint pipe and stripping of same, including repair of voids; Pavement breaker and spader, including tool grinder; Perma curb; Pipelayer (including grade checking in connection with pipelaying); Precast-manhole setter; Pressure pipe tester; Post hole digger, air, gas and electric; Power broom sweeper; Power tampers of all types (except as shown in Group 2); Ram set gun and stud gun; Riprap stonepaver and rock-slinger, including placing of sacked concrete and/or sand (wet or dry) and gabions and similar type; Rotary scarifier or multiple head concrete chipping scarifier; Roto and Ditch Witch; Rototiller; Sandblaster, pot, gun, nozzle operators; Signalling and rigging; Tank cleaner; Tree climber; Turbo blaster; Vibrascreed, bull float in connection with laborers' work; Vibrator; Hazardous waste worker (lead removal); Asbestos and mold removal worker

GROUP 1-a: Joy drill model TWM-2A; Gardner-Denver model DH143 and similar type drills; Track driller; Jack leg driller; Wagon driller; Mechanical drillers, all types regardless of type or method of power; Mechanical pipe layers, all types regardless of type or method of power; Blaster and powder; All work of loading, placing and blasting of all powder and explosives of whatever type regardless of method used for such loading and placing; High scalers (including drilling of same); Tree topper; Bit grinder

GROUP 1-b: Sewer cleaners shall receive $4.00 per day above Group 1 wage rates. "Sewer cleaner" means any worker who handles or comes in contact with raw sewage in small diameter sewers. Those who work inside recently active, large diameter sewers, and all recently active sewer manholes shal receive $5.00 per day above Group 1 wage rates.

GROUP 1-c: Burning and welding in connection with laborers' work; Synthetic thermoplastics and similar type welding

GROUP 1-d: Maintenance and repair track and road beds. All employees performing work covered herein shall receive $ .25 per hour above their regular rate for all work performed on underground structures not specifically covered herein. This paragraph shall not be construed to apply to work below ground level in open cut. It shall apply to cut and cover work of subway construction after the temporary cover has been placed.

GROUP 1-e: Work on and/or in bell hole footings and shafts thereof, and work on and in deep footings. (A deep footing is a hole 15 feet or more in depth.) In the event the depth of the footing is unknown at the commencement of excavation, and the final depth exceeds 15 feet, the deep footing wage rate would apply to all employees for each and every day worked on or in the excavation of the footing from the date of inception.

CONFORMED

GROUP 1-f: Wire winding machine in connection with guniting or shot crete

GROUP 1-g, CONTRA COSTA COUNTY: Pipelayer (including grade checking in connection with pipelaying); Caulker; Bander; Pipewrapper; Conduit layer; Plastic pipe layer; Pressure pipe tester; No joint pipe and stripping of same, including repair of voids; Precast manhole setters, cast in place manhole form setters

GROUP 2: Asphalt shoveler; Cement dumper and handling dry cement or gypsum; Choke-setter and rigger (clearing work); Concrete bucket dumper and chute; Concrete chipping and grinding; Concrete laborer (wet or dry); Driller tender, chuck tender, nipper; Guinea chaser (stake), grout crew; High pressure nozzle, adductor; Hydraulic monitor (over 100 lbs. pressure); Loading and unloading, carrying and hauling of all rods and materials for use in reinforcing concrete construction; Pittsburgh chipper and similar type brush shredders; Sloper; Single foot, hand-held, pneumatic tamper; All pneumatic, air, gas and electric tools not listed in Groups 1 through 1-f; Jacking of pipe - under 12 inches

GROUP 3: Construction laborers, including bridge and general laborer; Dump, load spotter; Flag person; Fire watcher; Fence erector; Guardrail erector; Gardener, horticultural and landscape laborer; Jetting; Limber, brush loader and piler; Pavement marker (button setter); Maintenance, repair track and road beds; Streetcar and railroad construction track laborer; Temporary air and water lines, Victaulic or similar; Tool room attendant (jobsite only)

GROUP 4: Final clean-up work of debris, grounds and building including but not limited to: street cleaner; cleaning and washing windows; brick cleaner (jobsite only); material cleaner (jobsite only). The classification "material cleaner" is to be utilized under the following conditions:
A: at demolition site for the salvage of the material.
B: at the conclusion of a job where the material is to be salvaged and stocked to be reused on another job.
C: for the cleaning of salvage material at the jobsite or temporary jobsite yard.

The material cleaner classification should not be used in the performance of "form stripping, cleaning and oiling and moving to the next point of erection".

GUNITE LABORER CLASSIFICATIONS

GROUP 1: Structural Nozzleman

GROUP 2: Nozzleman, Gunman, Potman, Groundman

GROUP 3: Reboundman

GROUP 4: Gunite laborer

CONFORMED

WRECKING WORK LABORER CLASSIFICATIONS

GROUP 1: Skilled wrecker (removing and salvaging of sash, windows and materials)

GROUP 2: Semi-skilled wrecker (salvaging of other building materials)

LABO0073-002 06/30/2014

CALAVERAS AND SAN JOAQUIN COUNTIES

	Rates	Fringes
LABORER (TRAFFIC CONTROL/LANE CLOSURE)		
Escort Driver, Flag Person..	$ 27.14	19.03
Traffic Control Person I....	$ 27.44	19.03
Traffic Control Person II...	$ 24.94	19.03

TRAFFIC CONTROL PERSON I: Layout of traffic control, crash cushions, construction area and roadside signage.

TRAFFIC CONTROL PERSON II: Installation and removal of temporary/permanent signs, markers, delineators and crash cushions.

LABO0073-003 06/30/2014

SAN JOAQUIN COUNTY

	Rates	Fringes
LABORER		
Mason Tender-Brick.....	$ 31.11	17.34

LABO0073-005 06/30/2014

	Rates	Fringes
Tunnel and Shaft Laborers:		
GROUP 1.....	$ 34.60	19.49
GROUP 2.....	$ 34.37	19.49
GROUP 3.....	$ 34.12	19.49
GROUP 4.....	$ 33.67	19.49
GROUP 5.....	$ 33.13	19.49
Shotcrete Specialist.....	$ 35.12	19.49

TUNNEL AND SHAFT CLASSIFICATIONS

GROUP 1: Diamond driller; Groundmen; Gunite and shotcrete nozzlemen

GROUP 2: Rodmen; Shaft work & raise (below actual or excavated ground level)

GROUP 3: Bit grinder; Blaster, driller, powdermen, heading; Cherry pickermen - where car is lifted; Concrete finisher in tunnel; Concrete screedman; Grout pumpman and potman; Gunite & shotcrete gunman & potman; Headermen; High pressure nozzleman; Miner - tunnel, including top and bottom man on shaft and raise work; Nipper; Nozzleman on slick line; Sandblaster - potman, Robotic Shotcrete Placer, Segment Erector, Tunnel Muck Hauler, Steel Form raiser and setter; Timberman, retimberman (wood or steel or substitute materials therefore); Tugger (for tunnel laborer work);

CONFORMED

Cable tender; Chuck tender; Powderman - primer house

GROUP 4: Vibrator operator, pavement breaker; Bull gang - muckers, trackmen; Concrete crew - includes rodding and spreading, Dumpmen (any method)

GROUP 5: Grout crew; Reboundman; Swamper/ Brakeman

LABO0166-001 07/01/2006

ALAMEDA AND CONTRA COSTA COUNTIES:

	Rates	Fringes
Brick Tender	$ 25.91	14.65

FOOTNOTES: Work on jobs where heat-protective clothing is required: $2.00 per hour additional. Work at grinders: $.25 per hour additional. Manhole work: $2.00 per day additional.

LABO0166-002 07/01/2007

SAN FRANCISCO AND SAN MATEO COUNTIES:

	Rates	Fringes
MASON TENDER, BRICK	$ 26.93	16.50

FOOTNOTES: Underground work such as sewers, manholes, catch basins, sewer pipes, telephone conduits, tunnels and cut trenches: $5.00 per day additional. Work in live sewage: $2.50 per day additional.

LABO0261-003 06/30/2014

SAN FRANCISCO AND SAN MATEO COUNTIES

	Rates	Fringes
LABORER (TRAFFIC CONTROL/LANE CLOSURE)		
Escort Driver, Flag Person	$ 28.14	19.03
Traffic Control Person I	$ 28.44	19.03
Traffic Control Person II	$ 25.94	19.03

TRAFFIC CONTROL PERSON I: Layout of traffic control, crash cushions, construction area and roadside signage.

TRAFFIC CONTROL PERSON II: Installation and removal of temporary/permanent signs, markers, delineators and crash cushions.

LABO0261-005 06/30/2014

SAN FRANCISCO AND SAN MATEO COUNTIES

	Rates	Fringes
Tunnel and Shaft Laborers:		
GROUP 1	$ 34.60	19.49
GROUP 2	$ 34.37	19.49

CONFORMED

```
     GROUP 3.....................$ 34.12            19.49
     GROUP 4.....................$ 33.67            19.49
     GROUP 5.....................$ 33.13            19.49
     Shotcrete Specialist........$ 35.12            19.49
```

TUNNEL AND SHAFT CLASSIFICATIONS

GROUP 1: Diamond driller; Groundmen; Gunite and shotcrete nozzlemen

GROUP 2: Rodmen; Shaft work & raise (below actual or excavated ground level)

GROUP 3: Bit grinder; Blaster, driller, powdermen, heading; Cherry pickermen - where car is lifted; Concrete finisher in tunnel; Concrete screedman; Grout pumpman and potman; Gunite & shotcrete gunman & potman; Headermen; High pressure nozzleman; Miner - tunnel, including top and bottom man on shaft and raise work; Nipper; Nozzleman on slick line; Sandblaster - potman, Robotic Shotcrete Placer, Segment Erector, Tunnel Muck Hauler, Steel Form raiser and setter; Timberman, retimberman (wood or steel or substitute materials therefore); Tugger (for tunnel laborer work); Cable tender; Chuck tender; Powderman - primer house

GROUP 4: Vibrator operator, pavement breaker; Bull gang- muckers, trackmen; Concrete crew - includes rodding and spreading, Dumpmen (any method)

GROUP 5: Grout crew; Reboundman; Swamper/ Brakeman

LABO0270-003 06/30/2014

AREA A: SANTA CLARA

AREA B: MONTEREY, SAN BENITO AND SANTA CRUZ COUNTIES

```
                                   Rates          Fringes
LABORER (TRAFFIC CONTROL/LANE
CLOSURE)
     Escort Driver, Flag Person
      Area A.....................$ 28.14            19.03
      Area B.....................$ 27.14            19.03
     Traffic Control Person I
      Area A.....................$ 28.44            19.03
      Area B.....................$ 27.44            19.03
     Traffic Control Person II
      Area A.....................$ 25.94            19.03
      Area B.....................$ 24.94            19.03
```

TRAFFIC CONTROL PERSON I: Layout of traffic control, crash cushions, construction area and roadside signage.

TRAFFIC CONTROL PERSON II: Installation and removal of temporary/permanent signs, markers, delineators and crash cushions.

LABO0270-004 06/30/2014

MONTEREY, SAN BENITO, SANTA CLARA, AND SANTA CRUZ COUNTIES

```
                                   Rates          Fringes
Tunnel and Shaft Laborers:
```

CONFORMED

```
     GROUP 1.....................$ 34.60            19.49
     GROUP 2.....................$ 34.37            19.49
     GROUP 3.....................$ 34.12            19.49
     GROUP 4.....................$ 33.67            19.49
     GROUP 5.....................$ 33.13            19.49
     Shotcrete Specialist........$ 35.12            19.49
```

TUNNEL AND SHAFT CLASSIFICATIONS

GROUP 1: Diamond driller; Groundmen; Gunite and shotcrete nozzlemen

GROUP 2: Rodmen; Shaft work & raise (below actual or excavated ground level)

GROUP 3: Bit grinder; Blaster, driller, powdermen, heading; Cherry pickermen - where car is lifted; Concrete finisher in tunnel; Concrete screedman; Grout pumpman and potman; Gunite & shotcrete gunman & potman; Headermen; High pressure nozzleman; Miner - tunnel, including top and bottom man on shaft and raise work; Nipper; Nozzleman on slick line; Sandblaster - potman, Robotic Shotcrete Placer, Segment Erector, Tunnel Muck Hauler, Steel Form raiser and setter; Timberman, retimberman (wood or steel or substitute materials therefore); Tugger (for tunnel laborer work); Cable tender; Chuck tender; Powderman - primer house

GROUP 4: Vibrator operator, pavement breaker; Bull gang- muckers, trackmen; Concrete crew - includes rodding and spreading, Dumpmen (any method)

GROUP 5: Grout crew; Reboundman; Swamper/ Brakeman

LABO0270-005 07/01/2013

MONTEREY AND SAN BENITO COUNTIES

```
                                   Rates          Fringes
LABORER
     Mason Tender-Brick..........$ 31.70            16.53
```

LABO0294-001 06/30/2014

FRESNO, KINGS AND MADERA COUNTIES

```
                                   Rates          Fringes
LABORER (Brick)
     Mason Tender-Brick..........$ 31.11            17.34
```

LABO0294-002 06/30/2014

FRESNO, KINGS, AND MADERA COUNTIES

```
                                   Rates          Fringes
LABORER (TRAFFIC CONTROL/LANE
CLOSURE)
     Escort Driver, Flag Person..$ 27.14            19.03
     Traffic Control Person I....$ 27.44            19.03
     Traffic Control Person II...$ 24.94            19.03
```

TRAFFIC CONTROL PERSON I: Layout of traffic control, crash cushions, construction area and roadside signage.

TRAFFIC CONTROL PERSON II: Installation and removal of temporary/permanent signs, markers, delineators and crash cushions.

CONFORMED

LABO0294-005 06/30/2014

FRESNO, KINGS, AND MADERA COUNTIES

	Rates	Fringes
Tunnel and Shaft Laborers:		
GROUP 1	$ 34.60	19.49
GROUP 2	$ 34.37	19.49
GROUP 3	$ 34.12	19.49
GROUP 4	$ 33.67	19.49
GROUP 5	$ 33.13	19.49
Shotcrete Specialist	$ 35.12	19.49

TUNNEL AND SHAFT CLASSIFICATIONS

GROUP 1: Diamond driller; Groundmen; Gunite and shotcrete nozzlemen

GROUP 2: Rodmen; Shaft work & raise (below actual or excavated ground level)

GROUP 3: Bit grinder; Blaster, driller, powdermen, heading; Cherry pickermen - where car is lifted; Concrete finisher in tunnel; Concrete screedman; Grout pumpman and potman; Gunite & shotcrete gunman & potman; Headermen; High pressure nozzleman; Miner - tunnel, including top and bottom man on shaft and raise work; Nipper; Nozzleman on slick line; Sandblaster - potman, Robotic Shotcrete Placer, Segment Erector, Tunnel Muck Hauler, Steel Form raiser and setter; Timberman, retimberman (wood or steel or substitute materials therefore); Tugger (for tunnel laborer work); Cable tender; Chuck tender; Powderman - primer house

GROUP 4: Vibrator operator, pavement breaker; Bull gang - muckers, trackmen; Concrete crew - includes rodding and spreading, Dumpmen (any method)

GROUP 5: Grout crew; Reboundman; Swamper/ Brakeman

LABO0304-002 06/30/2014

ALAMEDA COUNTY

	Rates	Fringes
LABORER (TRAFFIC CONTROL/LANE CLOSURE)		
Escort Driver, Flag Person	$ 28.14	19.03
Traffic Control Person I	$ 28.44	19.03
Traffic Control Person II	$ 25.94	19.03

TRAFFIC CONTROL PERSON I: Layout of traffic control, crash cushions, construction area and roadside signage.

TRAFFIC CONTROL PERSON II: Installation and removal of temporary/permanent signs, markers, delineators and crash cushions.

LABO0304-003 06/30/2014

ALAMEDA COUNTY

	Rates	Fringes
Tunnel and Shaft Laborers:		

CONFORMED

```
     GROUP 1.....................$ 34.60            19.49
     GROUP 2.....................$ 34.37            19.49
     GROUP 3.....................$ 34.12            19.49
     GROUP 4.....................$ 33.67            19.49
     GROUP 5.....................$ 33.13            19.49
     Shotcrete Specialist........$ 35.12            19.49
```

TUNNEL AND SHAFT CLASSIFICATIONS

GROUP 1: Diamond driller; Groundmen; Gunite and shotcrete nozzlemen

GROUP 2: Rodmen; Shaft work & raise (below actual or excavated ground level)

GROUP 3: Bit grinder; Blaster, driller, powdermen, heading; Cherry pickermen - where car is lifted; Concrete finisher in tunnel; Concrete screedman; Grout pumpman and potman; Gunite & shotcrete gunman & potman; Headermen; High pressure nozzleman; Miner - tunnel, including top and bottom man on shaft and raise work; Nipper; Nozzleman on slick line; Sandblaster - potman, Robotic Shotcrete Placer, Segment Erector, Tunnel Muck Hauler, Steel Form raiser and setter; Timberman, retimberman (wood or steel or substitute materials therefore); Tugger (for tunnel laborer work); Cable tender; Chuck tender; Powderman - primer house

GROUP 4: Vibrator operator, pavement breaker; Bull gang- muckers, trackmen; Concrete crew - includes rodding and spreading, Dumpmen (any method)

GROUP 5: Grout crew; Reboundman; Swamper/ Brakeman

LABO0324-002 06/30/2014

CONTRA COSTA COUNTY

```
                                   Rates          Fringes
LABORER (TRAFFIC CONTROL/LANE
CLOSURE)
     Escort Driver, Flag Person..$ 28.14            19.03
     Traffic Control Person I....$ 28.44            19.03
     Traffic Control Person II...$ 25.94            19.03
```

TRAFFIC CONTROL PERSON I: Layout of traffic control, crash cushions, construction area and roadside signage.

TRAFFIC CONTROL PERSON II: Installation and removal of temporary/permanent signs, markers, delineators and crash cushions.

LABO0324-006 06/30/2014

CONTRA COSTA COUNTY

```
                                   Rates          Fringes
Tunnel and Shaft Laborers:
     GROUP 1.....................$ 34.60            19.49
     GROUP 2.....................$ 34.37            19.49
     GROUP 3.....................$ 34.12            19.49
     GROUP 4.....................$ 33.67            19.49
     GROUP 5.....................$ 33.13            19.49
     Shotcrete Specialist........$ 35.12            19.49
```

TUNNEL AND SHAFT CLASSIFICATIONS

GROUP 1: Diamond driller; Groundmen; Gunite and shotcrete nozzlemen

CONFORMED

GROUP 2: Rodmen; Shaft work & raise (below actual or excavated ground level)

GROUP 3: Bit grinder; Blaster, driller, powdermen, heading; Cherry pickermen - where car is lifted; Concrete finisher in tunnel; Concrete screedman; Grout pumpman and potman; Gunite & shotcrete gunman & potman; Headermen; High pressure nozzleman; Miner - tunnel, including top and bottom man on shaft and raise work; Nipper; Nozzleman on slick line; Sandblaster - potman, Robotic Shotcrete Placer, Segment Erector, Tunnel Muck Hauler, Steel Form raiser and setter; Timberman, retimberman (wood or steel or substitute materials therefore); Tugger (for tunnel laborer work); Cable tender; Chuck tender; Powderman - primer house

GROUP 4: Vibrator operator, pavement breaker; Bull gang - muckers, trackmen; Concrete crew - includes rodding and spreading, Dumpmen (any method)

GROUP 5: Grout crew; Reboundman; Swamper/ Brakeman

LABO1130-002 06/30/2014

MARIPOSA, MERCED, STANISLAUS, AND TUOLUMNE COUNTIES

	Rates	Fringes
LABORER (TRAFFIC CONTROL/LANE CLOSURE)		
Escort Driver, Flag Person..	$ 27.14	19.03
Traffic Control Person I....	$ 27.44	19.03
Traffic Control Person II...	$ 24.94	19.03

TRAFFIC CONTROL PERSON I: Layout of traffic control, crash cushions, construction area and roadside signage.

TRAFFIC CONTROL PERSON II: Installation and removal of temporary/permanent signs, markers, delineators and crash cushions.

LABO1130-003 06/30/2014

MARIPOSA, MERCED, STANISLAUS, AND TUOLUMNE COUNTIES

	Rates	Fringes
Tunnel and Shaft Laborers:		
GROUP 1.....	$ 34.60	19.49
GROUP 2.....	$ 34.37	19.49
GROUP 3.....	$ 34.12	19.49
GROUP 4.....	$ 33.67	19.49
GROUP 5.....	$ 33.13	19.49
Shotcrete Specialist.....	$ 35.12	19.49

TUNNEL AND SHAFT CLASSIFICATIONS

GROUP 1: Diamond driller; Groundmen; Gunite and shotcrete nozzlemen

GROUP 2: Rodmen; Shaft work & raise (below actual or excavated ground level)

GROUP 3: Bit grinder; Blaster, driller, powdermen, heading; Cherry pickermen - where car is lifted; Concrete finisher in tunnel; Concrete screedman; Grout pumpman and potman; Gunite & shotcrete gunman & potman;

CONFORMED

Headermen; High pressure nozzleman; Miner - tunnel, including top and bottom man on shaft and raise work; Nipper; Nozzleman on slick line; Sandblaster - potman, Robotic Shotcrete Placer, Segment Erector, Tunnel Muck Hauler, Steel Form raiser and setter; Timberman, retimberman (wood or steel or substitute materials therefore); Tugger (for tunnel laborer work); Cable tender; Chuck tender; Powderman - primer house

GROUP 4: Vibrator operator, pavement breaker; Bull gang- muckers, trackmen; Concrete crew - includes rodding and spreading, Dumpmen (any method)

GROUP 5: Grout crew; Reboundman; Swamper/ Brakeman

LABO1130-005 06/30/2014

MARIPOSA, MERCED, STANISLAUS AND TUOLUMNE COUNTIES

	Rates	Fringes
LABORER		
Mason Tender-Brick	$ 31.11	17.34

LABO1414-004 08/05/2015

SAN FRANCISCO AND SAN MATEO COUNTIES:

	Rates	Fringes
PLASTER TENDER	$ 32.71	17.11

Work on a swing stage scaffold: $1.00 per hour additional.

LABO1414-007 08/05/2015

CALAVERAS, FRESNO, KINGS, MADERA, MARIPOSA, MERCED, SAN JOAQUIN, STANISLAUS & TUOLUMNE

	Rates	Fringes
Plasterer tender	$ 32.71	17.11

Work on a swing stage scaffold: $1.00 per hour additional.

LABO1414-008 08/05/2015

ALAMEDA AND CONTRA COSTA COUNTIES:

	Rates	Fringes
Plasterer tender	$ 32.71	17.11

Work on a swing stage scaffold: $1.00 per hour additional.

LABO1414-010 08/05/2015

SANTA CLARA AND SANTA CRUZ COUNTIES

	Rates	Fringes
PLASTER TENDER		
4 Stories and under	$ 30.71	17.11
5 Stories and above	$ 32.71	17.11

Work on a swing stage scaffold: $1.00 per hour additional.

CONFORMED

LABO1414-011 08/05/2015

MONTEREY AND SAN BENITO COUNTIES

	Rates	Fringes
Plasterer tender	$ 32.71	17.11

Work on a swing stage scaffold: $1.00 per hour additional.

PAIN0016-001 01/01/2015

ALAMEDA, CONTRA COSTA, MONTEREY, SAN BENITO, SAN MATEO, SANTA CLARA, AND SANTA CRUZ COUNTIES

	Rates	Fringes
Painters:	$ 36.45	21.48

PREMIUMS:

EXOTIC MATERIALS - $0.75 additional per hour.
SPRAY WORK: - $0.50 additional per hour.
INDUSTRIAL PAINTING - $0.25 additional per hour
[Work on industrial buildings used for the manufacture and processing of goods for sale or service; steel construction (bridges), stacks, towers, tanks, and similar structures]

HIGH WORK:
over 50 feet - $2.00 per hour additional
100 to 180 feet - $4.00 per hour additional
Over 180 feet - $6.00 per houir additional

PAIN0016-003 09/01/2015

AREA 1: ALAMEDA, CONTRA COSTA, SAN FRANCISCO, SAN MATEO & SANTA CLARA COUNTIES

AREA 2: CALAVERAS, MARIPOA, MERCED, MONTEREY, SAN BENITO, SAN JOAQUIN, SANTA CRUZ, STANISLAUS & TUOLUMNE COUNTIES

	Rates	Fringes
Drywall Finisher/Taper		
AREA 1	$ 42.37	21.33
AREA 2	$ 38.24	19.93

PAIN0016-012 01/01/2015

ALAMEDA, CONTRA COSTA, MARIPOSA, MERCED, MONTEREY, SAN BENITO, SAN FRANCISCO, SAN MATEO, SANTA CLARA AND SANTA CRUZ COUNTIES

	Rates	Fringes
SOFT FLOOR LAYER	$ 46.20	18.73

PAIN0016-015 01/01/2015

CALAVERAS, MARIPOSA, MERCED, SAN JOAQUIN, STANISLAUS & TUOLUMNE COUNTIES

	Rates	Fringes
PAINTER		
Brush	$ 30.85	16.85

CONFORMED

FOOTNOTES:
SPRAY/SANDBLAST: $0.50 additional per hour.
EXOTIC MATERIALS: $1.00 additional per hour.
HIGH TIME: Over 50 ft above ground or water level $2.00 additional per hour. 100 to 180 ft above ground or water level $4.00 additional per hour. Over 180 ft above ground or water level $6.00 additional per hour.

PAIN0016-022 01/01/2015

SAN FRANCISCO COUNTY

	Rates	Fringes
PAINTER	$ 40.07	21.48

PAIN0169-001 01/01/2015

FRESNO, KINGS, MADERA, MARIPOSA AND MERCED COUNTIES:

	Rates	Fringes
GLAZIER	$ 34.83	19.75

PAIN0169-005 01/01/2015

ALAMEDA CONTRA COSTA, MONTEREY, SAN BENITO, SAN FRANCISCO, SAN MATEO, SANTA CLARA & SANTA CRUZ COUNTIES

	Rates	Fringes
GLAZIER	$ 43.48	24.19

PAIN0294-004 01/01/2015

FRESNO, KINGS AND MADERA COUNTIES

	Rates	Fringes
PAINTER		
Brush, Roller	$ 25.67	15.68
Drywall Finisher/Taper	$ 30.47	16.81

FOOTNOTE:
Spray Painters & Paperhangers recive $1.00 additional per hour. Painters doing Drywall Patching receive $1.25 additional per hour. Lead Abaters & Sandblasters receive $1.50 additional per hour. High Time - over 30 feet (does not include work from a lift) $0.75 per hour additional.

PAIN0294-005 01/01/2015

FRESNO, KINGS & MADERA

	Rates	Fringes
SOFT FLOOR LAYER	$ 30.83	17.39

PAIN0767-001 01/01/2015

CALAVERAS, SAN JOAQUIN, STANISLAUS AND TUOLUMNE COUNTIES:

	Rates	Fringes
GLAZIER	$ 33.79	22.49

CONFORMED

PAID HOLIDAYS: New Year's Day, Martin Luther King, Jr. Day, President's Day, Memorial Day, Independence Day, Labor Day, Veteran's Day, Thanksgiving Day, and Christmas Day.

Employee rquired to wear a body harness shall receive $1.50 per hour above the basic hourly rate at any elevation.

PAIN1176-001 07/01/2014

HIGHWAY IMPR0VEMENT

	Rates	Fringes
Parking Lot Striping/Highway Marking:		
GROUP 1	$ 34.26	11.65
GROUP 2	$ 29.12	11.65
GROUP 3	$ 29.46	11.65

CLASSIFICATIONS

GROUP 1: Striper: Layout and application of painted traffic stripes and marking; hot thermo plastic; tape, traffic stripes and markings

GROUP 2: Gamecourt & Playground Installer

GROUP 3: Protective Coating, Pavement Sealing

PAIN1237-003 01/01/2015

CALAVERAS; SAN JOAQUIN COUNTIES; STANISLAUS AND TUOLUMNE COUNTIES:

	Rates	Fringes
SOFT FLOOR LAYER	$ 31.79	14.93

PLAS0066-002 07/01/2014

ALAMEDA, CONTRA COSTA, SAN MATEO AND SAN FRANCISCO COUNTIES:

	Rates	Fringes
PLASTERER	$ 35.34	24.21

PLAS0300-001 07/01/2014

	Rates	Fringes
PLASTERER		
AREA 188: Fresno	$ 29.44	22.26
AREA 224: San Benito, Santa Clara, Santa Cruz	$ 31.59	22.26
AREA 295: Calaveras & San Joaquin Couonties	$ 31.41	22.26
AREA 337: Monterey County	$ 30.52	22.26
AREA 429: Mariposa, Merced, Stanislaus, Tuolumne Counties	$ 31.41	22.26

PLAS0300-005 06/30/2014

CONFORMED

	Rates	Fringes
CEMENT MASON/CONCRETE FINISHER	$ 30.00	22.07

PLUM0038-001 07/01/2015

SAN FRANCISCO COUNTY

	Rates	Fringes
PLUMBER (Plumber, Steamfitter, Refrigeration Fitter)	$ 65.00	43.49

PLUM0038-005 07/01/2015

SAN FRANCISCO COUNTY

	Rates	Fringes
Landscape/Irrigation Fitter (Underground/Utility Fitter)	$ 55.10	40.91

PLUM0062-001 01/01/2016

MONTEREY AND SANTA CRUZ COUNTIES

	Rates	Fringes
PLUMBER & STEAMFITTER	$ 41.90	27.34

* PLUM0159-001 07/01/2016

CONTRA COSTA COUNTY

	Rates	Fringes
Plumber and steamfitter		
(1) Refrigeration	$ 55.03	34.46
(2) All other work	$ 55.92	34.44

PLUM0246-001 01/01/2016

FRESNO, KINGS & MADERA COUNTIES

	Rates	Fringes
PLUMBER & STEAMFITTER	$ 38.15	27.39

PLUM0246-004 07/01/2013

FRESNO, MERCED & SAN JOAQUIN COUNIES

	Rates	Fringes

CONFORMED

PLUMBER (PIPE TRADESMAN).....$ 13.00 9.77

PIPE TRADESMAN SCOPE OF WORK:
Installation of corrugated metal piping for drainage, as well as installation of corrugated metal piping for culverts in connection with storm sewers and drains; Grouting, dry packing and diapering of joints, holes or chases including paving over joints, in piping; Temporary piping for dirt work for building site preparation; Operating jack hammers, pavement breakers, chipping guns, concrete saws and spades to cut holes, chases and channels for piping systems; Digging, grading, backfilling and ground preparation for all types of pipe to all points of the jobsite; Ground preparation including ground leveling, layout and planting of shrubbery, trees and ground cover, including watering, mowing, edging, pruning and fertilizing, the breaking of concrete, digging, backfilling and tamping for the preparation and completion of all work in connection with lawn sprinkler and landscaping; Loading, unloading and distributing materials at jobsite; Putting away materials in storage bins in jobsite secure storage area; Demolition of piping and fixtures for remodeling and additions; Setting up and tearing down work benches, ladders and job shacks; Clean-up and sweeping of jobsite; Pipe wrapping and waterproofing where tar or similar material is applied for protection of buried piping; Flagman

---

PLUM0342-001 07/01/2015

ALAMEDA & CONTRA COSTA COUNTIES

	Rates	Fringes
PIPEFITTER		
CONTRA COSTA COUNTY.....	$ 53.46	40.19
PLUMBER, PIPEFITTER, STEAMFITTER		
ALAMEDA COUNTY.....	$ 53.46	40.19

PLUM0355-004 07/01/2015

ALAMEDA, CALAVERAS, CONTRA COSTA, FRESNO, KINGS, MADERA, MARIPOSA, MERCED, MONTEREY, SAN BENITO, SAN JOAQUIN, SAN MATEO, SANTA CLARA, SANTA CRUZ, STANISLAUS, AND TUOLUMNE COUNTIES:

	Rates	Fringes
Underground Utility Worker		
/Landscape Fitter.....	$ 28.60	10.05

PLUM0393-001 07/01/2015

SAN BENITO AND SANTA CLARA COUNTIES

	Rates	Fringes
PLUMBER/PIPEFITTER.....	$ 58.91	33.58

PLUM0442-001 01/01/2016

CALAVERAS, MARIPOSA, MERCED, SAN JOAQUIN, STANISLAUS & TUOLUMNE COUNTIES

CONFORMED

	Rates	Fringes
PLUMBER & STEAMFITTER	$ 39.25	27.14

PLUM0467-001 07/01/2015

SAN MATEO COUNTY

	Rates	Fringes
Plumber/Pipefitter/Steamfitter	$ 58.98	32.43

ROOF0027-002 09/01/2014

FRESNO, KINGS, AND MADERA COUNTIES

	Rates	Fringes
ROOFER	$ 26.37	12.68

FOOTNOTE: Work with pitch, pitch base of pitch impregnated products or any material containing coal tar pitch, on any building old or new, where both asphalt and pitchers are used in the application of a built-up roof or tear off: $2.00 per hour additional.

ROOF0040-002 08/01/2015

SAN FRANCISCO & SAN MATEO COUNTIES:

	Rates	Fringes
ROOFER	$ 35.50	15.82

ROOF0081-001 08/01/2015

ALAMEDA AND CONTRA COSTA COUNTIES:

	Rates	Fringes
Roofer	$ 36.08	14.90

ROOF0081-004 08/01/2015

CALAVERAS, MARIPOSA, MERCED, SAN JOAQUIN, STANISLAUS AND TUOLUMNE COUNTIES:

	Rates	Fringes
ROOFER	$ 32.71	14.65

ROOF0095-002 08/01/2015

CONFORMED

MONTEREY, SAN BENITO, SANTA CLARA, AND SANTA CRUZ COUNTIES:

	Rates	Fringes
ROOFER		
Journeyman	$ 37.55	15.52
Kettle person (2 kettles); Bitumastic, Enameler, Coal Tar, Pitch and Mastic worker	$ 39.55	15.52

SFCA0483-001 01/01/2015

ALAMEDA, CONTRA COSTA, SAN FRANCISCO, SAN MATEO AND SANTA CLARA COUNTIES:

	Rates	Fringes
SPRINKLER FITTER (FIRE)	$ 56.02	27.77

SFCA0669-011 01/01/2016

CALAVERAS, FRESNO, KINGS, MADERA, MARIPOSA, MERCED, MONTEREY, SAN BENITO, SAN JOAQUIN, SANTA CRUZ, STANISLAUS AND TUOLUMNE COUNTIES:

	Rates	Fringes
SPRINKLER FITTER	$ 34.31	20.25

SHEE0104-001 07/01/2015

AREA 1: ALAMEDA, CONTRA COSTA, SAN FRANCISCO, SAN MATEO, SANTA CLARA

AREA 2: MONTEREY & SAN BENITO

AREA 3: SANTA CRUZ

	Rates	Fringes
SHEET METAL WORKER		
AREA 1:		
Mechanical Contracts under $200,000	$ 46.30	40.28
All Other Work	$ 52.20	41.56
AREA 2	$ 41.99	32.86
AREA 3	$ 44.25	29.37

SHEE0104-003 07/01/2015

CALAVERAS AND SAN JOAQUIN COUNTIES:

	Rates	Fringes
SHEET METAL WORKER	$ 36.85	30.90

SHEE0104-005 07/01/2015

MARIPOSA, MERCED, STANISLAUS AND TUOLUMNE COUNTIES:

	Rates	Fringes
SHEET METAL WORKER (Excluding		

CONFORMED

metal deck and siding).....$ 36.29 33.79

SHEE0104-007 07/01/2015

FRESNO, KINGS, AND MADERA COUNTIES:

	Rates	Fringes
SHEET METAL WORKER.....	$ 35.11	33.54

SHEE0104-015 07/01/2015

ALAMEDA, CONTRA COSTA, MONTEREY, SAN BENITO, SAN FRANCISCO, SAN MATEO, SANTA CLARA AND SANTA CRUZ COUNTIES:

	Rates	Fringes
SHEET METAL WORKER (Metal Decking and Siding only).....	$ 34.15	32.98

SHEE0104-018 07/01/2015

CALAVERAS, FRESNO, KINGS, MADERA, MARIPOSA, MERCED, SAN JOAQUIN, STANISLAUS AND TUOLUMNE COUNTIES:

	Rates	Fringes
Sheet metal worker (Metal decking and siding only).....	$ 34.15	32.98

TEAM0094-001 07/01/2015

	Rates	Fringes
Truck drivers:		
GROUP 1.....	$ 28.57	25.22
GROUP 2.....	$ 28.87	25.22
GROUP 3.....	$ 29.17	25.22
GROUP 4.....	$ 29.52	25.22
GROUP 5.....	$ 29.87	25.22

FOOTNOTES:

Articulated dump truck; Bulk cement spreader (with or without auger); Dumpcrete truck; Skid truck (debris box); Dry pre-batch concrete mix trucks; Dumpster or similar type; Slurry truck: Use dump truck yardage rate. Heater planer; Asphalt burner; Scarifier burner; Industrial lift truck (mechanical tailgate); Utility and clean-up truck: Use appropriate rate for the power unit or the equipment utilized.

TRUCK DRIVER CLASSIFICATIONS

GROUP 1: Dump trucks, under 6 yds.; Single unit flat rack (2-axle unit); Nipper truck (when flat rack truck is used appropriate flat rack shall apply); Concrete pump truck (when flat rack truck is used appropriate flat rack shall apply); Concrete pump machine; Fork lift and lift jitneys; Fuel and/or grease truck driver or fuel person; Snow buggy; Steam cleaning; Bus or personhaul driver; Escort or pilot car driver; Pickup truck; Teamster oiler/greaser and/or serviceperson; Hook tender (including loading And unloading); Team driver; Tool room attendant (refineries)

GROUP 2: Dump trucks, 6 yds. and under 8 yds.; Transit mixers, through 10 yds.; Water trucks, under 7,000 gals.; Jetting trucks, under 7,000 gals.;

CONFORMED

Single-unit flat rack (3-axle unit); Highbed heavy duty transport; Scissor truck; Rubber-tired muck car (not self-loaded); Rubber-tired truck jumbo; Winch truck and "A" frame drivers; Combination winch truck with hoist; Road oil truck or bootperson; Buggymobile; Ross, Hyster and similar straddle carriers; Small rubber-tired tractor

GROUP 3: Dump trucks, 8 yds. and including 24 yds.; Transit mixers, over 10 yds.; Water trucks, 7,000 gals. and over; Jetting trucks, 7,000 gals. and over; Vacuum trucks under 7500 gals. Trucks towing tilt bed or flat bed pull trailers; Lowbed heavy duty transport; Heavy duty transport tiller person; Self- propelled street sweeper with self-contained refuse bin; Boom truck - hydro-lift or Swedish type extension or retracting crane; P.B. or similar type self-loading truck; Tire repairperson; Combination bootperson and road oiler; Dry distribution truck (A bootperson when employed on such equipment, shall receive the rate specified for the classification of road oil trucks or bootperson); Ammonia nitrate distributor, driver and mixer; Snow Go and/or plow

GROUP 4: Dump trucks, over 25 yds. and under 65 yds.; Water pulls - DW 10's, 20's, 21's and other similar equipment when pulling Aqua/pak or water tank trailers; Helicopter pilots (when transporting men and materials); Lowbedk Heavy Duty Transport up to including 7 axles; DW10's, 20's, 21's and other similar Cat type, Terra Cobra, LeTourneau Pulls, Tournorocker, Euclid and similar type equipment when pulling fuel and/or grease tank trailers or other miscellaneous trailers; Vacuum Trucks 7500 gals and over and truck repairman

GROUP 5: Dump trucks, 65 yds. and over; Holland hauler; Low bed Heavy Duty Transport over 7 axles

---

WELDERS - Receive rate prescribed for craft performing operation to which welding is incidental.

==========

Unlisted classifications needed for work not included within the scope of the classifications listed may be added after award only as provided in the labor standards contract clauses (29CFR 5.5 (a) (1) (ii)).

The body of each wage determination lists the classification and wage rates that have been found to be prevailing for the cited type(s) of construction in the area covered by the wage determination. The classifications are listed in alphabetical order of "identifiers" that indicate whether the particular
rate is a union rate (current union negotiated rate for local), a survey rate (weighted average rate) or a union average rate (weighted union average rate).

Union Rate Identifiers

A four letter classification abbreviation identifier enclosed in dotted lines beginning with characters other than "SU" or "UAVG" denotes that the union classification and rate were prevailing for that classification in the survey. Example: PLUM0198-005 07/01/2014. PLUM is an abbreviation identifier of the union which prevailed in the survey for this classification, which in this example would be Plumbers. 0198 indicates the local union number or district council number where applicable, i.e., Plumbers Local 0198. The next number, 005 in the example, is an internal number used in processing the wage determination. 07/01/2014 is the effective date of the most current negotiated rate, which in this example is July 1, 2014.

CONFORMED

Union prevailing wage rates are updated to reflect all rate changes in the collective bargaining agreement (CBA) governing this classification and rate.

Survey Rate Identifiers

Classifications listed under the "SU" identifier indicate that no one rate prevailed for this classification in the survey and the published rate is derived by computing a weighted average rate based on all the rates reported in the survey for that classification. As this weighted average rate includes all rates reported in the survey, it may include both union and non-union rates. Example: SULA2012-007 5/13/2014. SU indicates the rates are survey rates based on a weighted average calculation of rates and are not majority rates. LA indicates the State of Louisiana. 2012 is the year of survey on which these classifications and rates are based. The next number, 007 in the example, is an internal number used in producing the wage determination. 5/13/2014 indicates the survey completion date for the classifications and rates under that identifier.

Survey wage rates are not updated and remain in effect until a new survey is conducted.

Union Average Rate Identifiers

Classification(s) listed under the UAVG identifier indicate that no single majority rate prevailed for those classifications; however, 100% of the data reported for the classifications was union data. EXAMPLE: UAVG-OH-0010 08/29/2014. UAVG indicates that the rate is a weighted union average rate. OH indicates the state. The next number, 0010 in the example, is an internal number used in producing the wage determination. 08/29/2014 indicates the survey completion date for the classifications and rates under that identifier.

A UAVG rate will be updated once a year, usually in January of each year, to reflect a weighted average of the current negotiated/CBA rate of the union locals from which the rate is based.

WAGE DETERMINATION APPEALS PROCESS

1.) Has there been an initial decision in the matter? This can be:

* an existing published wage determination
* a survey underlying a wage determination
* a Wage and Hour Division letter setting forth a position on a wage determination matter
* a conformance (additional classification and rate) ruling

On survey related matters, initial contact, including requests for summaries of surveys, should be with the Wage and Hour Regional Office for the area in which the survey was conducted because those Regional Offices have responsibility for the Davis-Bacon survey program. If the response from this initial contact is not satisfactory, then the process described in 2.) and 3.) should be followed.

With regard to any other matter not yet ripe for the formal process described here, initial contact should be with the Branch of Construction Wage Determinations. Write to:

Branch of Construction Wage Determinations
Wage and Hour Division
U.S. Department of Labor
200 Constitution Avenue, N.W.
Washington, DC 20210

CONFORMED

2.) If the answer to the question in 1.) is yes, then an interested party (those affected by the action) can request review and reconsideration from the Wage and Hour Administrator (See 29 CFR Part 1.8 and 29 CFR Part 7). Write to:

Wage and Hour Administrator
U.S. Department of Labor
200 Constitution Avenue, N.W.
Washington, DC 20210

The request should be accompanied by a full statement of the interested party's position and by any information (wage payment data, project description, area practice material, etc.) that the requestor considers relevant to the issue.

3.) If the decision of the Administrator is not favorable, an interested party may appeal directly to the Administrative Review Board (formerly the Wage Appeals Board). Write to:

Administrative Review Board
U.S. Department of Labor
200 Constitution Avenue, N.W.
Washington, DC 20210

4.) All decisions by the Administrative Review Board are final.

==========

END OF GENERAL DECISION

CONFORMED

PROJECT TABLE OF CONTENTS

DIVISION 01 - GENERAL REQUIREMENTS

01 11 00 SUMMARY OF WORK
01 14 00 WORK RESTRICTIONS
01 16 00 GENERAL REQUIREMENTS
01 22 00.00 10 MEASUREMENT AND PAYMENT
01 32 01.00 10 PROJECT SCHEDULE
01 33 00 SUBMITTAL PROCEDURES
01 35 26 GOVERNMENTAL SAFETY REQUIREMENTS
01 42 00 SOURCES FOR REFERENCE PUBLICATIONS
01 45 00.00 10 QUALITY CONTROL
01 45 00.10 10 QUALITY CONTROL SYSTEM (QCS)
01 50 00 TEMPORARY CONSTRUCTION FACILITIES AND CONTROLS
01 57 19 TEMPORARY ENVIRONMENTAL CONTROLS
01 57 20.00 10 ENVIRONMENTAL PROTECTION
01 57 23 TEMPORARY STORM WATER POLLUTION CONTROL
01 58 00 PROJECT IDENTIFICATION
01 78 00 CLOSEOUT SUBMITTALS

DIVISION 02 - EXISTING CONDITIONS

02 22 13 VIBRATION MONITORING
02 41 00 DEMOLITION

DIVISION 03 - CONCRETE

03 11 13.00 10 STRUCTURAL CAST-IN-PLACE CONCRETE FORMING
03 15 00.00 10 CONCRETE ACCESSORIES
03 20 00.00 10 CONCRETE REINFORCING
03 31 01.00 10 CAST-IN-PLACE STRUCTURAL CONCRETE FOR CIVIL WORKS
03 35 00.00 10 CONCRETE FINISHING
03 39 00.00 10 CONCRETE CURING
03 40 00.00 10 PLANT-PRECAST CONCRETE PRODUCTS FOR BELOW GRADE CONSTRUCTION

DIVISION 31 - EARTHWORK

31 00 00 EARTHWORK
31 05 19 GEOTEXTILE
31 11 00 CLEARING AND GRUBBING
31 32 11 SOIL SURFACE EROSION CONTROL

DIVISION 32 - EXTERIOR IMPROVEMENTS

32 11 23 AGGREGATE AND/OR GRADED-CRUSHED AGGREGATE BASE COURSE
32 31 13 CHAIN LINK FENCES AND GATES
32 92 19 SEEDING

DIVISION 33 - UTILITIES

33 40 00 STORM DRAINAGE UTILITIES
33 46 16 SUBDRAINAGE SYSTEM

DIVISION 34 - TRANSPORTATION

34 11 00 RAILROAD TRACK AND ACCESSORIES

CONFORMED

DIVISION 35 - WATERWAY AND MARINE CONSTRUCTION

35 31 19 STONE PROTECTION FOR STRUCTURES

-- End of Project Table of Contents --

CONFORMED

SECTION TABLE OF CONTENTS

DIVISION 01 - GENERAL REQUIREMENTS

SECTION 01 11 00

SUMMARY OF WORK

08/11

PART 1 GENERAL

1.1 WORK COVERED BY CONTRACT DOCUMENTS
1.1.1 Project Description
1.1.2 Location
1.2 EXISTING WORK
1.3 LOCATION OF UNDERGROUND UTILITIES

PART 2 PRODUCTS

PART 3 EXECUTION

-- End of Section Table of Contents --

CONFORMED

SECTION 01 11 00

SUMMARY OF WORK
08/11

PART 1 GENERAL

1.1 WORK COVERED BY CONTRACT DOCUMENTS

1.1.1 Project Description

The work consists of all channel improvements for the Upper Berryessa Creek Flood Risk Management project including widening/reshaping of Berryessa Creek, placing riprap and erosion control blankets, improving channel crossings at East Calaveras Boulevard, Los Coches Street, Yosemite Drive, Ames Avenue, and Montague Expressway, storm drainage confluences, Union Pacific Railroad railway improvements, access roads, chainlink fence, revegetation, water proofing paint, gutter construction, and incidental related work.

1.1.2 Location

The work shall be located along Upper Berryessa Creek, from East Calaveras Boulevard on the downstream end to I-680 crossing on the upstream end, in the Santa Clara County, California, approximately as indicated on the plans.

1.2 EXISTING WORK

In addition to "FAR 52.236-9, Protection of Existing Vegetation, Structures, Equipment, Utilities, and Improvements":

a. Remove or alter existing work in such a manner as to prevent injury or damage to any portions of the existing work which remain.

b. Repair or replace portions of existing work which have been altered during construction operations to match existing or adjoining work, as approved by the Contracting Officer. At the completion of operations, existing work shall be in a condition equal to or better than that which existed before new work started.

1.3 LOCATION OF UNDERGROUND UTILITIES

Obtain digging permits prior to start of excavation. Verify the elevations of existing piping, utilities, and any type of underground or encased obstruction not indicated to be specified or removed but indicated or discovered during scanning in locations to be traversed by piping, ducts, and other work to be conducted or installed. Verify elevations before installing new work closer than nearest manhole or other structure at which an adjustment in grade can be made.

Notify the Contracting Officer at least 48 hours prior to starting excavation work.

PART 2 PRODUCTS

Not used.

CONFORMED

PART 3 EXECUTION

Not used.

-- End of Section --

CONFORMED

SECTION TABLE OF CONTENTS

DIVISION 01 - GENERAL REQUIREMENTS

SECTION 01 14 00

WORK RESTRICTIONS

11/11

PART 1 GENERAL

1.1 SUBMITTALS
1.2 CONTRACTOR ACCESS AND USE OF PREMISES
1.2.1 Activity Regulations
1.2.1.1 Subcontractors and Personnel Contacts
1.2.1.2 No Smoking Policy
1.2.2 Working Hours
1.2.3 Work Outside Regular Hours
1.2.4 Utility Cutovers and Interruptions
1.2.5 Channel Work Restrictions

PART 2 PRODUCTS

PART 3 EXECUTION

-- End of Section Table of Contents --

CONFORMED

SECTION 01 14 00

WORK RESTRICTIONS
11/11

PART 1 GENERAL

1.1 SUBMITTALS

Government approval is required for submittals with a "G" designation; submittals not having a "G" designation are for information only. When used, a designation following the "G" designation identifies the office that will review the submittal for the Government. Submit the following in accordance with Section 01 33 00 SUBMITTAL PROCEDURES:

SD-01 Preconstruction Submittals

List of Contact Personnel; G

1.2 CONTRACTOR ACCESS AND USE OF PREMISES

1.2.1 Activity Regulations

Ensure that Contractor personnel employed on the Activity become familiar with and obey Activity regulations including safety, fire, traffic and security regulations. Keep within the limits of the work and avenues of ingress and egress. Wear hard hats in designated areas. Do not enter any restricted areas unless required to do so and until cleared for such entry. Mark Contractor equipment for identification.

1.2.1.1 Subcontractors and Personnel Contacts

Provide a list of contact personnel of the Contractor and subcontractors including addresses and telephone numbers for use in the event of an emergency. As changes occur and additional information becomes available, correct and change the information contained in previous lists.

1.2.1.2 No Smoking Policy

Smoking is prohibited within and outside of all buildings on installation, except in designated smoking areas. This applies to existing buildings, buildings under construction and buildings under renovation. Discarding tobacco materials other than into designated tobacco receptacles is considered littering and is subject to fines. The Contracting Officer will identify designated smoking areas.

1.2.2 Working Hours

Construction hours would be limited between 7 a.m. and 7 p.m., Monday through Saturday. In any case, no work will be permitted on Sunday or Federal Holidays.

The San Jose Municipal Code limits construction within 500 feet of residential units to 7 a.m. to 7 p.m., Monday through Friday (Municipal Code 20.100.450)

Construction of the UPRR culvert between Sta 160+18.45 and Sta. 161+56.45

CONFORMED

shall be limited to the date and time to be determined and approved by the Contracting Officer.

1.2.3 Work Outside Regular Hours

Work outside regular working hours requires Contracting Officer approval. Make application 15 calendar days prior to such work to allow arrangements to be made by the Government for inspecting the work in progress, giving the specific dates, hours, location, type of work to be performed, contract number and project title. Based on the justification provided, the Contracting Officer may approve work outside regular hours. During periods of darkness, the different parts of the work must be lighted in a manner approved by the Contracting Officer. Make utility cutovers after normal working hours or on Saturdays, Sundays, and Government holidays unless directed otherwise.

1.2.4 Utility Cutovers and Interruptions

a. Make utility cutovers and interruptions after normal working hours or on Saturdays, Sundays, and Government holidays. Conform to procedures required in the paragraph "Work Outside Regular Hours."

b. Ensure that new utility lines are complete, except for the connection, before interrupting existing service.

c. Interruption to water, sanitary sewer, storm sewer, telephone service, electric service are considered utility cutovers pursuant to the paragraph entitled "Work Outside Regular Hours."

1.2.5 Channel Work Restrictions

In-Channel construction work is not allowed from contract award and NTP until March 1, 2017 or the end of the rainy season as determined/directed by the Contracting Officer from Station 87+21.43 to Station 120+00 and from Station 159+50 to Station 179+00. This is to limit the potential for downstream flooding. Work in all other areas is allowed anytime it is not precluded by any and all other requirements.

PART 2 PRODUCTS

Not Used

PART 3 EXECUTION

Not Used

-- End of Section --

CONFORMED

SECTION TABLE OF CONTENTS

DIVISION 01 - GENERAL REQUIREMENTS

SECTION 01 16 00

GENERAL REQUIREMENTS

01/2015

PART 1 GENERAL

1.1 APPLICABLE PUBLICATIONS
1.2 SUBMITTALS
1.3 Existing Topograhic Mapping
1.4 SCRAP MATERIAL
1.5 SALVAGE MATERIALS
1.6 CONSTRUCTION WATER
1.7 CHANGE SITE CONDITIONS
1.8 ARCHAEOLOGICAL FINDINGS DURING CONSTRUCTION
1.9 Union Pacific Railroad (UPRR)
1.10 PROTECTION OF EXISTING WORK
1.11 PUBLIC UTILITIES, NOTICES, AND RESTRICTIONS
1.11.1 General
1.11.2 Cooperation and Coordination with Others
1.11.3 Work Notification
1.11.4 Relocation or Removal
1.11.5 Utilities Not Shown
1.11.6 Notices
1.11.6.1 Utilities Owned by the City of Milpitas
1.11.6.2 Utilities To be Relocated or Protected
1.11.6.3 Permanent Utility Relocations by Others
1.11.6.4 Existing Bench Marks and R/W Markers
1.11.6.5 Spill Reporting
1.11.7 Restrictions
1.11.7.1 Representatives of Other Agencies
1.11.7.2 Vehicle and Construction Equipment
1.11.7.3 Working Hours
1.11.7.4 Disposal Locations for Excess Excavated Material
1.11.7.5 Water Course
1.11.7.6 Progress Payments
1.11.7.7 Roads
1.12 Best Managemnt Practice (BMP) for Pathogen Control
1.12.1 Plant Pathogen at Contaminated Sites and Sensitive Sites
1.12.2 Contaminated Site Standard Operating Procedures
1.12.3 Sensitive Site Standard Operating Procedures
1.13 PUBLIC SAFETY
1.13.1 Contractor Safety Personnel Requirement
1.13.2 Qualifications for Safety and Health Professional(s)
1.14 OCCUPATIONAL SAFETY AND HEALTH ACT (OSHA)
1.14.1 Accident Reporting
1.15 TRAFFIC AND ACCESS
1.16 WATER CONTAMINATION
1.17 BULLETIN BOARD, PROJECT SIGN, AND SAFETY SIGNS
1.17.1 Bulletin Board
1.17.2 Project and Safety Signs
1.17.2.1 Project Information Signs
1.17.2.2 Warning Signs

CONFORMED

1.17.2.3 Hard Hat Signs
1.18 PERMITS
1.18.1 General
1.18.1.1 City of Milpitas Business License
1.18.1.2 City of Milpitas Encroachment Permit
1.18.1.3 City of Milpitas Bonds and Fees
1.18.1.4 Caltrans Encroachment Permit
1.18.1.5 County of Santa Clara Construction Encroachment Permit
1.19 NOTICE OF PARTNERSHIP
1.20 POST-CONSTRUCTION CLEANUP
1.21 TIME EXTENSIONS FOR UNUSUALLY SEVERE WEATHER
1.22 LAYOUT OF WORK

PART 2 PRODUCTS (Not Applicable)

PART 3 EXECUTION (Not Applicable)

-- End of Section Table of Contents --

CONFORMED

SECTION 01 16 00

GENERAL REQUIREMENTS
01/2015

PART 1 GENERAL

1.1 APPLICABLE PUBLICATIONS

The publications listed below form a part of this specification to the extent referenced. The publications are referred to in the text by basic designation only.

U.S. NATIONAL ARCHIVES AND RECORDS ADMINISTRATION (NARA)

CFR 29 Part 1926	Safety and Health Regulations for Construction

U.S. ARMY CORPS OF ENGINEERS (USACE)

EM 385-1-1	(2014) Safety and Health Requirements Manual

1.2 SUBMITTALS

SD-01 Preconstruction Submittals

Work Notification; G

The Contractor shall notify the Contracting Officer a minimum of three (3) business days prior to any construction activities taking place.

1.3 Existing Topograhic Mapping

The existing topographic mapping used in the design is available upon request from the Corps of Engineers.

1.4 SCRAP MATERIAL

Materials indicated to be removed and not indicated to be salvaged, stored or reinstalled are designated as scrap and shall become the property of the Contractor and be removed from the site of work. The Contractor by signing this contract hereby acknowledges that he made due allowance for value, if any, of such scrap in the contract price.

1.5 SALVAGE MATERIALS

All materials removed and indicated to be either stored or reinstalled are designated as salvaged materials. Any salvaged materials, which are excess upon completion of the work and are not indicated to be stored, shall become the property of the Contractor.

1.6 CONSTRUCTION WATER

The provision of water for use in performing the various items of work

CONFORMED

shall be the Contractor's responsibility. The Contractor shall, whenever possible, minimize the use of water during construction of the project. Watering equipment shall be kept in good working order; water leaks shall be repaired promptly; and washing of equipment, except when necessary for the safety or for the protection of equipment, shall be discouraged.

No potable water shall be used for construction within City of Milpitas. Only non-potable (recycled) water shall be used. The Contractor shall obtain a City of Milpitas recycled construction water meter. The Contractor shall pay the required meter deposit and water usage charge. Recycled water fill stations are located in several areas of the City.

1.7 CHANGE SITE CONDITIONS

If unanticipated conditions are encountered the Contractor shall immediately bring the condition to the attention of the Contracting Officer. Immediately on discovery of the need for interpretation of the Contract Documents, the Contractor shall prepare and submit a request for information (RFI) for clarification.

1.8 ARCHAEOLOGICAL FINDINGS DURING CONSTRUCTION

An existing archaeological site, officially designate as CA-SCL-593, exists within the project area. The Contractor shall perform the required construction at CA-SCL-593 in accordance with all requirements in paragraph 3.2 ARCHAEOLOGICAL SITE CA-SCL-593 of Section 01 57 20.00 10.

Should the Contractor or any of his employees in the performance of this contract discover other archaeological resources in the project area, he shall immediately notify the Contracting Officer by telephone and in writing, and provide the location and nature of the findings. See Section 3.4 PROTECTION OF CULTURAL RESOURCES for additional information about discovery procedures. Should the discovery site require archaeological studies resulting in delays and/or additional work, the Contractor will be compensated by an equitable adjustment under the CONTRACT CLAUSES of the contract.

1.9 Union Pacific Railroad (UPRR)

Construction activities in and around active UPRR tracks shall require all personnel of the Contractor, including subcontractors, agents, suppliers, consultants, etc., to, at all times, comply with and adhere to the safety requirements of UPRR. In this regard, the Contractor shall be solely responsible for notifying all such personnel working on the project of UPRR safety requirements. The Contractor shall also be solely responsible for ensuring that all such personnel complete a UPRR Safety Training Course including providing documentation of the date and name of all personnel successfully completing the Course. Such documentation shall be available to the Contracting Officer and Engineer upon request. The Contractor shall keep a copy of the UPRR safety requirements on site at all times. The Contractor's safety meetings shall also regularly address the UPRR requirements.

1.10 PROTECTION OF EXISTING WORK

Before beginning any cutting or removal work, the Contractor shall carefully survey the existing work and examine the drawings and specifications to determine the extent of the work. The Contractor shall take all necessary precautions to ensure against damage to existing work to

CONFORMED

remain in place, to be reused, or to remain the property of the Government, and any damage to such work shall be repaired or replaced as approved by the Contracting Officer at no additional cost to the Government. The Contractor shall carefully coordinate the work of this section with all other work and construct and maintain shoring, bracing and supports, as required. The Contractor shall ensure that structural elements are not overloaded and be responsible for increasing structural supports or adding new supports as may be required as a result of any cutting, removal, or demolition work performed under any part of this Contract.

1.11 PUBLIC UTILITIES, NOTICES, AND RESTRICTIONS

1.11.1 General

The Contractor shall notify the Contracting Officer and the regional notification center for operators of subsurface installations at least 2 working days prior to performing any excavation or other work close to any underground pipelines, conduits, ducts, wires, etc. in order for the utility companies to make and identify locations of existing facilities. Regional notification centers shall be notified by calling 811 or 1-800-227-2600 Underground Service Alert North.

The approximate location of all railroads, pipe lines, power and communication lines, and other utilities known to exist within the limits of the work are indicated on the drawings. The sizes, locations, and names of owners of such utilities are given from available information, but their accuracy is not guaranteed. Except as otherwise indicated on the drawings, all existing utilities will be left in place and the Contractor shall conduct his operations in such a manner that the utilities will be protected from damage at all times, or arrangements shall be made by the Contractor for their relocation at the Contractor's own expense. The Contractor shall be responsible for any damage to utilities known to exist and shall reimburse the owner for such damage caused by his operations.

1.11.2 Cooperation and Coordination with Others

The Contractor shall be aware that construction work independent of the work under this contract, such as work in Montague Expressway, and along South Milpitas Boulevard that improve the UPRR crossing and/or the reclaimed water pipeline downstream of Los Coches Street, may proceed at the same time and in the same general area as the project described herein. The Contractor shall cooperate with other forces performing the work and provide such working space as may be required. All work within UPRR ROW or adjacent to UPRR tracks shall require worker training regarding UPRR safety policies and protocols in conformance with Subsection 1.8 of this Section. Work within UPRR ROW or adjacent to UPRR tracks shall also be in compliance with all applicable OSHA health and safety requirements.

The Contractor shall consult and cooperate with the owner of utilities that are to be relocated or removed by others to establish a mutual performance schedule and to enable coordination of such work with the construction work. These consultations shall be held as soon as possible after award of the contract or sufficiently in advance of anticipated interference with construction operations to provide required time for the removal or relocation of affected utilities.

No additional compensation shall become due the Contractor by virtue of compliance with these paragraphs.

CONFORMED

1.11.3 Work Notification

The Contractor shall notify the Contracting Officer a minimum of three (3) business days prior to any construction activities taking place.

1.11.4 Relocation or Removal

Utilities to be relocated or removed not as part of this contract are designated "To be Relocated by Others" or "To be Removed by Others," respectively. Utilities shown on the plans and not so designated will be left in place and be subject to the clause of the contract: PROTECTION OF EXISTING VEGETATION, STRUCTURES, UTILITIES, AND IMPROVEMENTS of the CONTRACT CLAUSES. The Contractor may make arrangements with the owner for the temporary relocation and restoration of utilities not designated to be relocated, or for additional work in excess of the work needed to relocate utilities designated for relocation at no additional cost to the Government.

1.11.5 Utilities Not Shown

If the Contractor encounters, within the construction limits of the entire project, utilities not shown on the plans and not visible as of the date of this contract and if such utilities will interfere with construction operations, he shall immediately notify the Contracting Officer in writing to enable a determination by the Contracting Officer as to the necessity for removal or relocation. If such utilities are left in place, removed or relocated, as directed by the Contracting Officer, the Contractor shall be entitled to an equitable adjustment for any additional work or delay.

1.11.6 Notices

1.11.6.1 Utilities Owned by the City of Milpitas

All work on City's utilities shall be in compliance with the City of Milpitas standard drawings and specifications. Modification to City's storm drain and sanitary sewer manholes shall be in compliance with the construction details shown on the drawings and/or City's standard drawings.

1.11.6.2 Utilities To be Relocated or Protected

Unless otherwise specified, the Contractor shall notify the Contracting Officer, in writing, 30 calendar days prior to starting work on any utility to be relocated or protected. On each protection, notification shall include dates on which the Contractor plans excavation, and construction work, as applicable. The Contractor shall also notify the following representatives of utility owners not less than 14 days, unless otherwise specified, prior to start of work in the vicinity of their respective utilities:

City of Milpitas
455 East Calaveras Boulevard
Milpitas, CA 95035
Steve Erickson
CIP Manager
(408) 586-3301

City of San Jose
200 East Santa Clara Street
San Jose, CA 95113
Sal Kumar

CONFORMED

(408) 535-3500

San Jose Water Company
110 W. Taylor St.
San Jose, CA 95110
(408) 279-7900

AT&T Right of Way Manager & PWC
870 N McCarthy Blvd, Suite 100
Milpitas, CA 95035
Buno Czech
(408) 635-8881

CableCom
825 Chadbourne Rd,
Fairfield, CA 94534
Alexandra Martinez
Design Manager
Office: (707) 759-4070 Ex: 236
Cell: (707) 816-0522

PG&E Land Management
111 Almaden Blvd., Rm 814
San Jose, CA 95113
Scott Brady
Land Agent
(408) 282-7543

Verizon Wireless
Paul Lynch
Manager - Network Operations
Sunnyvale MTSO/Distro
(925) 324-0181

1.11.6.3 Permanent Utility Relocations by Others

Except as otherwise specified, the Contractor shall notify the Contracting Officer, in writing, not less than 14 days in advance of the date on which he will complete trenching, excavation, fill or rough grading, as applicable, at each location where such completed work is required for temporary or permanent relocations by others. The Contractor shall allow a period of 14 calendar days at each relocation, after which time the Contractor may resume his operations.

1.11.6.4 Existing Bench Marks and R/W Markers

The Contractor shall notify the Contracting Officer, in writing, 7 days in advance of the time he proposes to remove any bench mark or right-of-way marker.

1.11.6.5 Spill Reporting

The Contractor shall notify the Contracting Officer immediately after all spills, regardless of quantity, including all personnel exposures. The Contractor shall submit a written notification not later than 7 calendar days after the initial notification. The written notification shall include the following:

a. Item spilled, leaked or released in an unauthorized manner

CONFORMED

(Identification, Quantity and Manifest Numbers).

b. Whether the amount spilled, leaked or released in an unauthorized manner is EPA reportable and, if reported, a copy of the report.

c. Exact location of the spill, leak or unauthorized release.

d. Nature of exposure to personnel.

e. Containment procedures initiated.

f. Anticipated cleanup and disposal procedures.

g. Disposal location of spill, leak or unauthorized release residue.

1.11.7 Restrictions

1.11.7.1 Representatives of Other Agencies

Personnel representing owners and agencies may be present for various portions of the work. However, the Contractor will be responsible only to the Contracting Officer.

1.11.7.2 Vehicle and Construction Equipment

Vehicular travel and operation of construction equipment on the existing concrete channel shall be subject to the following limitations and restrictions.

a. Vehicles shall be limited to rubber-tired equipment.

b. Maximum tire pressure shall not exceed 100 pounds per square inch.

c. Single axle load shall not exceed 18,000 pounds.

Contractor shall not store, park or repair any motor vehicles directly underneath or within ten (10) feet of the drip line of any overhead electrical conductor.

1.11.7.3 Working Hours

The Contractor shall restrict all construction activities, including warming equipment, to the following schedule:

Monday through Saturday 7 a.m. to 7:00 p.m.

Access to the job site will be allowed 30 minutes prior to starting time unless otherwise approved by the Contracting Officer. Work on Saturdays may be permitted under certain circumstances and with a written approval from the Contracting Officer. The Contractor shall submit his/her request a minimum of 3 days prior to the intended working Saturday. No work will be permitted on Sundays or Federal Holidays. See 01 14 00 WORK RESTRICTIONS for more restrictions.

1.11.7.4 Disposal Locations for Excess Excavated Material

Unless otherwise shown on the Plans or in the Specifications, no excess excavated material may be disposed of within the construction limits. The Contractor shall make all arrangements for disposal of the material at

CONFORMED

off-site locations and shall, upon request, file with the Contracting Officer the written consent of the owner of the property upon which it intends to dispose of such material.

1.11.7.5 Water Course

The following restrictions apply to the entire construction period.

a. Material shall not be stockpiled or stored within the channel. The existing channel shall not be obstructed without the approval of the Contracting Officer.

b. The channel invert shall be graded level across the channel, unless noted otherwise.

c. No shoring which obstructs flow shall be permitted within the existing channel without approval of the Contracting Officer.

1.11.7.6 Progress Payments

Partial pay estimates shall be submitted every month. The following items shall be submitted with the partial pay estimates to ensure prompt payment:

a. Monthly update reports as specified in SECTION: CONTRACTOR QUALITY CONTROL, paragraph: Contractor Prepared Network Analysis System (NAS).

b. Safety report(s) in accordance with OSHA and the Corps of Engineers' EM 385-1-1.

c. Updated/current submittal register as specified in SECTION: SUBMITTAL PROCEDURES, paragraph: Submittal Register (ENG FORM 4288).

d. Quality Control Reports as specified in SECTION: CONTRACTOR'S QUALITY CONTROL, paragraph: Documentation.

1.11.7.7 Roads

a. Existing Roads

The work shall be planned in such a manner that traffic on the existing roads outside the actual construction areas shall be maintained at all times, except as specified otherwise. Maintenance shall be as specified in paragraph: Maintenance of Roads. The work area shall be examined carefully relative to the order and scope of work to be performed, with respect to the limiting provisions of the plans and specifications. Others may do additional work on the existing roads during the life of this contract.

b. Public and Private Access Roads

When it is necessary for heavy equipment to operate on or to cross project roads or arterial roads, flaggers, signs, lights, and/or other necessary safeguards shall be furnished to safely control and direct the flow of traffic. When it is necessary to operate on existing roads outside the construction area, all necessary permits shall be obtained from the appropriate private or public authority. Work shall be conducted in such manner so as to obstruct and inconvenience traffic on existing roads outside the construction limits as little as possible. Spillage of earth, dusty materials, aggregates, and mud on project

CONFORMED

roads or other roads shall not be permitted. If spillage cannot be prevented, the spillage shall be immediately removed and such areas shall be kept clear throughout the workday. At the conclusion of each workday, such traveled areas shall be cleared of spillage, dusty materials, aggregates, and mud.

c. Maintenance of Roads

All roads, within the construction areas, shall be maintained regularly to provide vehicular access for the Government's vehicles and the Contractor's vehicles and equipment during the contract performance period. Road maintenance shall include clearing and disposal of rock/mud slides on the roads and drainage ditches; repair of washouts; repair of potholes, ruts; regrading; and any incident which would restrict vehicular/equipment access. Prior to any alterations of any road alignment the Contractor shall receive approval from the Contracting Officer. The Contractor at no additional cost to the Government shall perform Road maintenance and alterations.

d. Traffic Safety

Warning Devices. In accordance with Contract Clause, ACCIDENT PREVENTION, signs, barricades, and warning devices shall be provided, installed, and maintained as are required for protection of vehicular, bicycle and pedestrian traffic at any location where operations interfere with public or private roads. Traffic control shall be provided and maintained in accordance with Part VIII of the California Manual on Uniform Traffic Control Devices, as well as any City of Milpitas, Santa Clara County, Caltrans, UPRR and local jurisdiction modifications thereto.

The Contractor shall provide flaggers and guards required by regulations, when deemed necessary for safety, or as directed by the Contracting Officer. The Contractor shall furnish flaggers and guards with approved orange wearing apparel and other regulation traffic control devices.

e. Cooperation with Others

In addition to Contract Clause, OTHER CONTRACTS, agreements shall be made for cooperative use and maintenance of project roads directly between the Contractors concerned and shall be subject to approval by the Contracting Officer. No maintenance shall be charged for its use of the roads.

1.12 Best Managemnt Practice (BMP) for Pathogen Control

1.12.1 Plant Pathogen at Contaminated Sites and Sensitive Sites

All personnel and equipment entering and exiting a site that is contaminated with plant pathogens must avoid spreading the contamination from one site to next. All personnel and equipment entering and exiting a sensitive site must avoid introduction of plant pathogens into a sensitive site.

A contaminated site is defined as a site that has been tested and confirmed to contain an infestation of Phytophthora spp., or a site that is highly suspected to be contaminated (due to adjacency to a contaminated site or being located directly downstream or downslope of a contaminated site).

CONFORMED

A sensitive site is a site that contains rare or endangered plants or vegetation communities, or is located adjacent to pristine or high-quality wildland habitat. A sensitive site will be defined by a qualified biologist prior to project construction.

1.12.2 Contaminated Site Standard Operating Procedures

Prior to entry at a Contaminated Site the Contractor will implement and to minimize the spread of plant pathogens that could be present in vehicles, construction equipment and tools, and work shoes through the following procedures:

a. Vehicles should stay on established roads whenever possible.

b. Lower maintenance roads upstream of tidally influenced areas should be avoided during the wet season (generally October 15th - April 30th) or when the road is wet enough that soil will stick to vehicle tires and undercarriages.

c. The exterior and interior of all vehicles, construction equipment, and tools should be clean and free of debris, soil and mud (including mud on tires, treads, wheel wells and undercarriage) prior to arrival at a new job site.

d. Work shoes should be kept clean by inspecting shoe soles and removing mud, debris and soil off treads before moving to a new job site.

Upon leaving a Contaminated Site:

a. Vehicles, equipment and large tools must be thoroughly cleaned before moving to a new job site.

    1. Compliance with this provision is achieved by demonstrating that the vehicle or equipment has been cleaned at a commercial vehicle or appropriate truck washing facility.

    2. Equipment must be free of soil and debris on tires, wheel wells, vehicle undercarriages, and other surfaces. A high pressure washer and/or compressed air may be used to ensure that soil and debris are completely removed. The interior of equipment (cabs, etc.) must be free of mud, soil, gravel and other debris. Interiors may be vacuumed or washed.

b. Foot wear and small tools must be thoroughly cleaned and sanitized before moving to a new job site.

    1. Shoe soles must be free of debris and soil. Water, a stiff brush, screwdriver or similar tool can be used to remove soil from shoe treads.

    2. Once soil or debris have been removed, an appropriate sanitizing agent of ethyl or isopropyl alcohol (at least 70% concentration) must be used to kill pathogen spores which may be present on boot soles or tools (sanitizing agent may be applied by using spray bottles filled with alcohol to thoroughly wet the surface). Boot soles and hand tools must be sprayed with enough alcohol that surfaces are fully coated and wet. Brushes and other implements used to help remove soil will be cleaned after use with alcohol.

CONFORMED

1.12.3 Sensitive Site Standard Operating Procedures

Prior to entry at a Sensitive Site:

a. Vehicles, equipment and large tools must be thoroughly cleaned before arriving at a Sensitive Site.

    1. Compliance with this provision is achieved by demonstrating that the vehicle or equipment has been cleaned at a commercial vehicle or appropriate truck washing facility.

    2. Equipment must be free of soil and debris on tires, wheel wells, vehicle undercarriages, and other surfaces. A high pressure washer and/or compressed air may be used to ensure that soil and debris are completely removed.

    3. The interior of equipment (cabs, etc.) must be free of mud, soil, gravel and other debris. Interiors may be vacuumed or washed.

b. Foot wear and small tools must be thoroughly cleaned before arriving at a Sensitive Site.

    1. Shoe soles must be free of debris and soil. Water, a stiff brush, screwdriver or similar tool can be used to remove soil from shoe treads.

    2. Once soil or debris have been removed, an appropriate sanitizing agent of ethyl or isopropyl alcohol (at least 70% concentration) must be used to kill pathogen spores which may be present on boot soles or tools (sanitizing agent may be applied by using spray bottles filled with alcohol to thoroughly wet the surface). Boot soles and hand tools must be sprayed with enough alcohol that surfaces are fully coated and wet. Brushes and other implements used to help remove soil will be cleaned after use with alcohol.

Upon leaving a Sensitive Site - there are no specific procedures except to continue to follow the applicable standard operating procedures in the BMP for Pathogen Control above.

1.13 PUBLIC SAFETY

Attention is directed to the CONTRACT CLAUSE: PERMITS AND RESPONSIBILITIES. The Contractor shall furnish, install, maintain and remove temporary fencing, barricades, and/or guards, as required, to provide protection in the interest of public safety and in conformance with applicable Federal, State, and local laws and ordinances. As a minimum, this will include an 8-foot chain-link fence to keep the public out of area(s) where the Contractor worked in or is working on. The plan of this temporary fencing shall be furnished to the Contracting Officer for approval and the fence erected prior to commencement of any work.

Whenever the Contractor's operations create a condition hazardous to the public, he shall furnish at his own expense and without cost to the Government, such flagmen and guards as are necessary to give adequate warning to the public of any dangerous conditions to be encountered and he shall furnish, erect, or maintain such fences, barricades, lights, signs and other devices as are necessary to prevent accidents and avoid damage or injury to the public. Flagmen and guards, while on duty and assigned to

CONFORMED

give warning and safety devices, shall conform to applicable city, county, and state requirements.

Should the Contractor appear to be neglectful or negligent in furnishing adequate warning and protection measures, the Contracting Officer may direct attention to the existence of a hazard and the necessary warning and protective measures shall be furnished and installed by the Contractor without additional cost to the Government. Should the Contracting Officer point out the inadequacy of warning and protective measures, such action of the Contracting Officer shall not relieve the Contractor from any responsibility for public safety or abrogate his obligation to furnish and pay for those devices. The installation of any general illumination shall not relieve the Contractor of his responsibility for furnishing and maintaining any protective facility.

The Contractor shall ensure that sufficient fire-fighting equipment (e.g., extinguishers, shovels, water tankers) is available to construction personnel to help minimize the chance of human-caused wildfires. Shields, protective mats, and/or other fire preventive methods shall be used during grinding, welding, and other spark-inducing activities. Personnel shall be trained regarding fire hazards, preventive actions, and responses to fires.

1.13.1 Contractor Safety Personnel Requirement

Full-time, one-site, safety coverage by Contractors shall be required at all times during this contract.

This contract is considered high hazard and the following conditions and safety requirements are to be followed during the entire duration of this contract.

The Contractor shall employ at the project site to cover all hours of work at least one Safety and Occupational Health Professional to manage the overall Safety program and to manage the Contractor's accident prevention program. Duties which are not germane to the safety program, such as quality control or project engineering shall not be assigned to the Safety and Health staff. The Safety Professional shall report to and work directly for the Contractor's on-site top manager, higher level official, or corporate safety office. The Safety and Health staff shall have the authority to take immediate steps to correct unsafe or unhealthful conditions. The presence of a Safety and Health person shall not abrogate safety responsibilities of other personnel.

1.13.2 Qualifications for Safety and Health Professional(s)

a. Shall have a degree in engineering or safety in at least a four year program from an accredited school and in addition, shall have been engaged in safety and occupational health for at least two (2) years, no time being credited to these two (2) years unless at least fifty (50) percent of the time each year was devoted to safety and occupational health; or

b. Shall have a legal registration as a Professional Engineer, Certified Safety Professional, or a Certified Safety Manager, and in addition, shall have been engaged in safety and occupational health for at least (1) year, no time being credited to this one (1) year experience unless at least fifty (50) percent of the time was devoted to safety and occupational health; or

CONFORMED

c. Shall have degree other than that specified in (a) above and in addition, shall have been engaged in safety and occupational health for at least three (3) years, no time being credited to this three (3) year experience unless at least fifty (50) percent of the time was devoted to safety and occupational health; or

d. In lieu of a degree, shall have been engaged in safety and occupational health for at least five (5) years, no time being credited to this five (5) year experience unless at least fifty (50) percent of the time was devoted to safety and occupational health;

e. First aid work in not creditable experience.

The following shall be furnished to the Contraction Officer for acceptability prior to the pre-construction conference:

a. The name and qualifications of nominated safety person(s) (in resume format).

b. A functional description of duties.

c. A copy of a letter from an authorized official of the Contractor which describes the duties and authority of the safety professional, including delegating sufficient authority to stop work to immediately correct the unsafe or unhealthful conditions.

1.14 OCCUPATIONAL SAFETY AND HEALTH ACT (OSHA)

The OCCUPATIONAL SAFETY and HEALTH ACT (OSHA) STANDARDS for CONSTRUCTION (CFR 29 Part 1926) and the Corps of Engineers General Safety and Health Requirements Manual, EM 385-1-1, are both applicable to this contract. The most stringent requirement of the two standards will be applicable.

1.14.1 Accident Reporting

In accordance with EM 385-1-1, the Contractor shall submit a written summary of worker's compensation claims which have been filed by workers in connection with work on the project. The summary shall be submitted at the time when the work is approximately 50 percent complete and at project completion. The summary shall include all subcontractors. The Contractor's and subcontractor's compensation insurance carrier shall certify that the summaries are "correct and true".

1.15 TRAFFIC AND ACCESS

The Contractor's operations shall cause no unnecessary inconvenience. The access rights of the public shall be considered at all times. Unless otherwise authorized, traffic shall be permitted to pass through the Work, or an approved detour shall be provided. Traffic Control and Detour Plans for various work locations shall be prepared by the Contractor, inclusive of submittal to the appropriate jurisdiction for review and acceptance, prior to commencing any work affecting traffic at that location. The cost of preparation of Traffic Control and Detour Plans, inclusive of review and permit costs, shall be borne solely by the Contractor. The Contractor shall implement these plans, as minimum required, and shall modify and revise these plans as necessary to meet all applicable Federal, State and local regulations and ordinances, or as directed by the Contracting Officer.

Safe and adequate pedestrian and vehicular access shall be provided and

CONFORMED

maintained to: fire hydrants; hotels/motels; hospitals; police and fire stations; and establishments of similar nature. Access to these facilities shall be continuous and unobstructed unless otherwise approved by the Contracting Officer.

Safe and adequate pedestrian and vehicular access shall be provided and maintained to: commercial and industrial establishments; churches, schools and parking lots; service stations; and establishments of similar nature, Access to these facilities shall be continuous and unobstructed during their normal operating hours, unless otherwise approved by the Contracting Officer.

Safe and adequate pedestrian zones and public transportation stops, as well as pedestrian crossings of the Work at intervals not exceeding 90 m (300 feet), shall be maintained unless otherwise approved by the Contracting Officer.

Vehicular access to residential driveways shall be maintained to the property line except when necessary construction precludes such access for reasonable periods of time. If backfill has been completed to the extent that safe access may be provided, and the street is opened to local traffic, the Contractor shall immediately clear the street and driveways and provide and maintain access.

The Contractor shall notify all affected residents and business operators/owners, in writing, a minimum of 48 hours prior to any closure or restriction of vehicular access to their properties. The notification shall identify the date, time, expected duration of restriction or closure and an emergency contact name and telephone number.

The Contractor shall cooperate with the various parties involved in the delivery of mail and the collection and removal of trash and garbage to maintain existing schedules for these services.

Grading operations, roadway excavation and fill construction shall be conducted by the Contractor in a manner to provide a reasonably satisfactory surface for traffic. When rough grading is completed, the roadbed surface shall be brought to a smooth, even condition satisfactory for traffic.

Unless otherwise authorized, work shall be performed in only one-half the roadway at one time. One half shall be kept open and unobstructed until the opposite side is ready for use. If one-half a street only is being improved, the other half shall be conditioned and maintained as a detour.

The Contractor shall include in its Bid all costs for the above requirements.

1.16 WATER CONTAMINATION

In order to prevent contamination of groundwater and water along waterways, all refuse, oil, greases, and other petroleum products; all toxic materials, including waste water from truck washing operations; all cement or concrete; or water containing such materials shall be disposed of in a manner to prevent their entry into the groundwater or water along any drainage courses, ditches, creeks and channels. The Contractor shall submit a plan to the Contracting Officer for containment of all water contamination. The Contractor shall update the plan as the terrain changes during construction. Use of impervious aprons and containment areas are

CONFORMED

required for handling of lubrication and other toxic fluids from fueling and washing of vehicles.

The Contractor shall notify the Contracting Office if evidence of previously undiscovered soil or groundwater contamination (e.g. stained soil, odorous groundwater) is encountered during construction activities so the appropriate Federal, Setae, and local agencies can be notified. Any contaminated areas shall be remediated in accordance with recommendations made by San Francisco Bay Regional Water Quality Control Board, and/or other appropriate Federal, State, or local regulatory agencies.

1.17 BULLETIN BOARD, PROJECT SIGN, AND SAFETY SIGNS

The Contractor shall construct and/or erect the following project facilities as soon as possible and not less than 15 calendar days after notice to proceed.

1.17.1 Bulletin Board

Immediately upon beginning of work, the Contractor shall provide a weatherproof glass-covered bulletin board not less than 36 by 48 inches in size for displaying the Equal Employment Opportunity poster, a copy of the wage decision contained in the contract, Wage Rate Information poster, and other information approved by the Contracting Officer. The bulletin board shall be located at the project site in a conspicuous place easily accessible to all employees, as approved by the Contracting Officer. Legible copies of the aforementioned data shall be displayed until work is completed. Upon completion of work the bulletin board shall be removed by and remain the property of the Contractor.

1.17.2 Project and Safety Signs

The requirements for the signs, their content, and location shall be as shown on the drawings attached at the end of this section. The signs shall be erected within 15 days after receipt of the notice to proceed. The data required by the safety sign shall be corrected daily, with light colored metallic or non-metallic numerals. Upon completion of the project, the signs shall be removed from the site.

1.17.2.1 Project Information Signs

Contractor shall provide and install one (1) project information sign, at a location to be determined by the Contracting Officer, at the start of construction to inform the public of the forthcoming project and construction dates. Signs shall be constructed in accordance with the Project Sign Information Figures 1 and 2 included at the end of this section to be provided to the Contractor at the pre-construction meeting. The signs shall be installed at the location(s) approved by the Contracting Officer. The Contractor shall maintain the signs as necessary, and update the information as requested by the Contracting Officer.

1.17.2.2 Warning Signs

Contractor shall provide and install warning signs facing approaching traffic on all roads crossing under overhead power lines. Contractor shall also supply warning signs at railroad crossings at locations shown on the Drawings or directed by the Contracting Officer. Warning signs shall conform to the applicable requirements found in Subsection 1.11.7.7d.

CONFORMED

1.17.2.3 Hard Hat Signs

Contractor shall provide and install six hard hat signs as shown in the Hard Hat Sign figure at the end of this section, at locations directed by the Contracting Officer.

1.18 PERMITS

1.18.1 General

Reference is made to the clause of the contract titled "Permits and Responsibilities," which obligates the Contractor to obtain all required licenses and permits, including, but not necessarily limited to the following specified below.

1.18.1.1 City of Milpitas Business License

The Contractor shall obtain and pay for a business license from the City of Milpitas.

1.18.1.2 City of Milpitas Encroachment Permit

The Contractor shall obtain a right-of-way encroachment permit from the City of Milpitas for any roads and streets closures, detours, truck crossings, flagging, and other construction activities within the City's right-of-way.

It shall also include the City's inspection fees, posting a bond for work on City owned utilities, and preparation and approval of traffic control plan, if required.

1.18.1.3 City of Milpitas Bonds and Fees

The Contractor shall pay the City's inspection fees and posting a bond for working on City owned utilities. The Contractor must also obtain all other necessary permits, including hauling permits, from the City of Milpitas.

1.18.1.4 Caltrans Encroachment Permit

The SCVWD is currently working with Caltrans to obtain a Master Encroachment Permit. The Contractor shall be responsible to obtain the individual Encroachment Permit when working within Caltrans regulated area. The Contractor shall be responsible for the required fee.

1.18.1.5 County of Santa Clara Construction Encroachment Permit

The Contractor shall obtain an constructtion encroachment permit from the County of Santa Clara for any work within expressway right-of-way. The Contractor will need to apply for the construction encroachment permit minimum 3 weeks prior to start of work.

1.19 NOTICE OF PARTNERSHIP

The Government intends to encourage the foundation of a cohesive partnership with the Contractor and its subcontractors. This partnership will be structured to draw on the strengths of each organization to identify and achieve reciprocal goals. The objectives are effective and efficient contract performance and intended to achieve completion within

CONFORMED

budget, on schedule, and in accordance with plans and specifications. This partnership would be bilateral in makeup, and participation will be totally voluntary. To implement this partnership initiative, it is anticipated that within 60 days of Notice to Proceed the Contractor's on-site project manager and the Government's Resident Engineer would attend a one or two day partnership development seminar/team building workshop together with the Contractor's key on-site staff and key Government personnel. Follow-up workshops of 1 to 2 days duration would be held periodically throughout the duration of the contract as agreed to by the Contractor and Government.

1.20 POST-CONSTRUCTION CLEANUP

The Contractor shall obliterate all signs of temporary construction facilities such as work areas, structures, foundations of temporary structures, stockpiles of excess or waste materials, or any other vestiges of construction as directed by the Contracting Officer. Excavation, filling, regrading and plowing of construction areas will require the areas to be restored to near natural conditions, which will permit the growth of vegetation thereon. The disturbed areas shall be graded and filled as required, and the areas scarified prior to placement of soil covering for hydroseeding.

1.21 TIME EXTENSIONS FOR UNUSUALLY SEVERE WEATHER

This provision specifies the procedure for determination of time extensions for unusually severe weather in accordance with the Contract Clause titled: DEFAULT (FIXED PRICE CONSTRUCTION). In order for the Contracting Officer to award a time extension under this clause, the following conditions must be satisfied:

a. Adverse Weather Days were determined based on the following 2 elements (high temperature was not a factor):

(i) Daily Precipitation greater than 0.1 inches.

(ii) Minimum Daily Temperature lower than 32 degrees F.

The following schedule of monthly anticipated adverse weather delays will constitute the baseline for monthly weather time evaluations. The Contractor's progress schedule must reflect these anticipated adverse weather delays in all-weather dependent activities.

MONTHLY ANTICIPATED ADVERSE WEATHER DAYS FOR City of Milpitas, CA BASED ON A 6-DAY WORKWEEK.

JAN	FEB	MAR	APR	MAY	JUN	JUL	AUG	SEP	OCT	NOV	DEC
4	4	3	2	2	1	1	1	1	2	3	4

1.22 LAYOUT OF WORK

The Contractor shall lay out its work from the government-established base lines and bench marks indicated on the drawings, and shall be responsible for all measurements in connection with the layout. The Contractor shall furnish, at its own expense, all stakes, templates, platforms, equipment, tools, materials, and labor required to lay out any part of the work. The Contractor shall be responsible for executing the work to the lines and grades that may be established or indicated by the Contracting Officer. The Contractor shall also be responsible for maintaining and preserving all stakes and other marks established by the Contracting Officer until

CONFORMED

authorized to remove them. If such marks are destroyed by the Contractor or through its negligence before their removal is authorized, the Contracting Officer may replace them and deduct the expense of the replacement from any amounts due or to become due to the Contractor.

PART 2 PRODUCTS (Not Applicable)

PART 3 EXECUTION (Not Applicable)

-- End of Section --

CONFORMED

SECTION 01 22 00.00 10

MEASUREMENT AND PAYMENT
04/06

PART 1 GENERAL

1.1 SUBMITTALS

Government approval is required for submittals with a "G" designation; submittals not having a "G" designation are for information only. When used, a designation following the "G" designation identifies the office that will review the submittal for the Government.

1.2 JOB (JA) PAYMENT ITEMS

Payment items for the work of this contract for which contract JOB (JA) payments will be made are listed in the BIDDING SCHEDULE and described below. All costs for items of work, which are not specifically mentioned to be included in a particular JOB (JA) or unit price payment item, shall be included in the listed JOB (JA) item most closely associated with the work involved. The JOB (JA) price and payment made for each item listed shall constitute full compensation for furnishing all plant, labor, materials, and equipment, and performing any associated Contractor quality control, environmental protection, meeting safety requirements, tests and reports, and for performing all work required for which separate payment is not otherwise provided.

1.2.1 Clearing and Grubbing, Demolition and Control of Water

1.2.1.1 Payment

Payment will be made for costs associated with all work and operations necessary for clearing and grubbing in accordance with Section 31 11 00 CLEARING AND GRUBBING. Payment for Clearing and Grubbing shall include applicable earthwork, grubbing, filling holes, removal of materials for salvage, removal of existing surface and buried trash and debris and removal of trees and vegetation from within areas to be excavated and areas to receive fills, structures and stockpiles, protection, replacement or restoration of existing structures and features and disposal of all materials.

Payment for Demolition will be made for costs associated with all work and operations necessary for demolition associated with the channel improvements in accordance with Section 02 41 00 DEMOLITION. Demolition of junction structures, foot bridge abutments, concrete slab at Los Coches bridge, concrete channels, and other miscellaneous elements that are not paid for under separate payment item elsewhere.

Payment for Control of Water will be made at the applicable contract price, which payment shall constitute full compensation for dewatering the work area and diverting and controlling the water in the channel and other work areas.

CONFORMED

1.2.1.2 Unit of Measure

Unit of Measure: Job

1.2.2 Earthwork

1.2.2.1 Payment

Payment for Earthwork shall constitute full compensation for furnishing all plant, labor, materials, and equipment, and performing any associated excavation, backfill, hauling excess material offsite, traffic control, dust control, legally disposed of offsite, Contractor quality control, environmental protection, meeting safety requirements, tests and reports, and for performing all work required. The contaminated soil material are to be stockpiled at two temporary staging areas and protected against any further disturbances. The cost of vibration monitoring in accordance with Section 02 22 13VIBRATION MONITORING shall also be included.

1.2.2.2 Unit of Measure

Unit of Measure: Job

1.2.3 Riprap Revetment and Erosion Control

1.2.3.1 Payment

Payment for 9-in, 12-in, 15-in and 24-in Riprap Revetment shall constitute full compensation for all work required for furnishing, transporting, stockpiling (if applicable), acceptably placing of stone, in accordance to Section 35 31 19 STONE PROTECTION FOR STRUCTURES, on the final slope or area within the lines and grades shown on the drawings or directed by the Contracting Officer, including all earthwork, subgrade preparation, and placement of geotextile related to construction of this item, complete.

Payment for 24-in Grouted Riprap Revetment shall constitute full compensation for all work required for furnishing, transporting, stockpiling (if applicable), acceptably placing of stone, in accordance to Section 35 31 19 STONE PROTECTION FOR STRUCTURES, on the final slope or area within the lines and grades shown on the drawings or directed by the Contracting Officer, including obtaining and placing grout and all earthwork, subgrade preparation, and placement of geotextile related to construction of this item, complete.

Payment for Erosion Control Blanket shall constitute full compensation for subgrade preparation, furnish and install erosion control blankets and all applicable components and all necessary incidentals, complete per actual dimensions and details shown on the plans. Overlap, trimming, and waste of erosion control blanket will not be paid.

1.2.3.2 Unit of Measure

Unit of Measure: Job

1.2.4 RC Floodwall

CONFORMED

1.2.4.1 Payment

Payment for RC Floodwall shall constitute full compensation for subgrade preparation, forming, obtaining and placing concrete and steel reinforcement and all necessary incidentals, complete per details shown on the plans. Steel reinforcement is included in this pay item.

1.2.4.2 Unit of Measure

Unit of Measure: Job

1.2.5 14'W x 6'H Reinforced Concrete Box

1.2.5.1 Payment

Payment for the 14'W x 6'H Reinforced Concrete Box shall constitute full compensation for the construction of RCB culverts, cutoff walls, headwalls, 6’ high chain link fence, including excavation, subgrade preparation, forming, obtaining and placing concrete and steel reinforcement, and all necessary incidentals complete per details shown on the plans.

1.2.5.2 Unit of Measure

Unit of measure: Job

1.2.6 RC Channel and Transition Structures

1.2.6.1 Payment

Payment for the RC Channel and Transition Structures shall constitute full compensation for the construction of channel and transition, cutoff walls, headwalls, 6’ high chain link fence, including excavation, subgrade preparation, forming, obtaining and placing concrete and steel reinforcement, and all necessary incidentals complete per details shown on the plans. The 4' cutoff wall at Sta. 199+22.28 is also included in this work item.

1.2.6.2 Unit of Measure

Unit of Measurement: Job

1.2.7 18" to 36" RCP Drains and Outlet Structures

1.2.7.1 Payment

Payment for 18" to 36" RCP Drains and Outlet Structures shall constitute full compensation for the installation, including excavation, compacted fill materials, under, around and over the pipe, laying the pipe, inlets and outlets of various types of construction, frames and gratings, flared end sections, pipe joints, reinforced concrete collar, metal work, complete and in-place as shown on construction plans and accordance with Section 33 40 00 - STORM DRAINAGE UTILITIES.

1.2.7.2 Unit of Measure

Unit of measure: Job

CONFORMED

1.2.8 Demo of UPRR Piedmont Bridge

1.2.8.1 Payment

Payment for Demo of UPRR Piedmont Bridge shall be full compensation for costs associated with all work necessary for demolition, construction and coordination associated with the UPRR spurline bridge in accordance with various sections in this specification.

1.2.8.2 Unit of Measure

Unit of Measurement: Job

1.2.9 Access Roads

1.2.9.1 Payment

Payment for Access Roads shall constitute full compensation for subgrade preparation, forming, obtaining and placing aggregate base course, compacting, and all necessary incidentals, complete per details shown on the plans. The construction of the concrete gutter in place between Sta. 171+90 to Sta. 175+24 is included as part of this payment access roads.

1.2.9.2 Unit of Measure

Unit of Measure: Job

1.2.10 Crane Pads

1.2.10.1 Payment

Payment for Crane Pads shall constitute full compensation for subgrade preparation, forming, obtaining and placing aggregate base course, compacting, and all necessary incidentals, complete per details shown on the plans.

1.2.10.2 Unit of Measure

Unit of Measure: Job

1.2.11 Chainlink Fence and Gates

1.2.11.1 Payment

Payment for Chainlink Fence and Gates shall constitute full compensation for furnishing and installation of chain link fencing and gates, including posts with caps, rail, chainlink fabric, stretcher bars, tension bands, wire ties, truss wire, concrete, excavation holes, disposing of surplus excavated material, labor, tools, materials, and all incidentals, complete as shown on the plans.

1.2.11.2 Unit of Measure

Unit of measure: Job

1.2.12 Concrete Downramps

CONFORMED

1.2.12.1 Payment

Payment for Concrete Downramps shall constitute full compensation for subgrade preparation, forming, obtaining and placing concrete and steel reinforcement and all necessary incidentals, complete per details shown on the plans. Steel reinforcement is included in this pay item.

1.2.12.2 Unit of Measure

Unit of Measure: Job

1.2.13 Driveway Entrance

1.2.13.1 Payment

Payment for Driveway Entrance shall constitute full compensation for subgrade preparation, forming, obtaining and placing concrete and steel reinforcement and all necessary incidentals, complete per details shown on the plans. Steel reinforcement is included in this pay item.

1.2.13.2 Unit of Measure

Unit of Measure: Job

1.2.14 Wetland/Upland Hydro Seed

1.2.14.1 Payment

Payment for Wetland/Upland Hydro Seed shall constitute full compensation for soil conditioning, applying fertilizer and mulch, furnishing and applying seeds, applying water, and all necessary incidentals, complete per details shown on the plans.

1.2.14.2 Unit of Measure

Unit of Measure: Job

1.2.15 Precast RCB - UPRR

1.2.15.1 Payment

Payment for the Precast RCB - UPRR shall constitute full compensation for furnishing all plant, labor, materials, and equipment, and performing any associated Contractor quality control, obtain the required permits, test and reports for the construction of precast RCB culverts, including excavation, subgrade preparation, placement of precast RCB, installing tie-rods, upstream and downstream transitions, approaching slabs, and all necessary incidentals complete per details shown on the plans.

1.2.15.2 Unit of Measure

Unit of Measure: Job

1.2.16 UPRR Railway Construction and Transition

1.2.16.1 Payment

CONFORMED

Payment for the UPRR Railway Construction and Transition shall constitute full compensation for furnishing all plant, labor, materials, and equipment, and performing any associated Contractor quality control, obtain the required permits, test and reports, the construction ofsubballast.

1.2.16.2 Unit of Measure

Unit of Measurement: Job

1.2.17 Treatment of Contaminated Groundwater

1.2.17.1 Payment

Payment for Treatment of Contaminated Groundwater shall constitute full compensation for labor and material necessary to furnishing and removing all plant, labor for installation, materials, and equipment, and performing any associated Contractor quality control, environmental protection, meeting safety requirements, tests and reports, operate the groundwater treatment plant, including the monthly rental fee, providing all materials, electrical power, treat the contaminated groundwater, sampling and reporting, hauling off the treatment media offsite, and legally discharge back into Berryessa Creek and in accordance with Section 31 00 00 - EARTHWORK.

1.2.17.2 Unit of Measure

Unit of Measure: Job

1.2.18 Flap Gate Check Valves

1.2.18.1 Payment

Payment for Flap Gate Check Valves shall constitute full compensation for the installation, including purchasing flap gate check valves, providing labor and materials for installation, testing, and providing manufacturer's assistance, complete and in-place as shown on construction plans and accordance with Section 33 40 00 - STORM DRAINAGE UTILITIES.

1.2.18.2 Unit of Measure

Unit of measure: Job

1.3 UNIT PRICE PAYMENT ITEMS

Payment items for the work of this contract on which the contract unit price payments will be made are listed in the BIDDING SCHEDULE and described below. The unit price and payment made for each item listed shall constitute full compensation for furnishing all plant, labor, materials, and equipment, and performing any associated Contractor quality control, environmental protection, meeting safety requirements, tests and reports, and for performing all work required for each of the unit price items.

1.3.1 Manhole Grade Adjustment

1.3.1.1 Payment

CONFORMED

Payment for Manhole Grade Adjustment shall constitute full compensation for excavation, subgrade preparation, raise the manhole cover, compaction, and all necessary incidentals, complete per details shown on the plans.

1.3.1.2 Unit of Measure

Unit of Measure: Each

PART 2 PRODUCTS

Not Used

PART 3 EXECUTION

Not Used

-- End of Section --

CONFORMED

SECTION TABLE OF CONTENTS

DIVISION 01 - GENERAL REQUIREMENTS

SECTION 01 32 01.00 10

PROJECT SCHEDULE

02/15

PART 1 GENERAL

1.1 REFERENCES
1.2 SUBMITTALS
1.3 PROJECT SCHEDULER QUALIFICATIONS

PART 2 PRODUCTS

2.1 SOFTWARE
2.1.1 Government Default Software
2.1.2 Contractor Software
2.1.2.1 Primavera
2.1.2.2 Other Than Primavera

PART 3 EXECUTION

3.1 GENERAL REQUIREMENTS
3.2 BASIS FOR PAYMENT AND COST LOADING
3.2.1 Activity Cost Loading
3.2.2 Withholdings / Payment Rejection
3.3 PROJECT SCHEDULE DETAILED REQUIREMENTS
3.3.1 Level of Detail Required
3.3.2 Activity Durations
3.3.3 Procurement Activities
3.3.4 Mandatory Tasks
3.3.5 Government Activities
3.3.6 Standard Activity Coding Dictionary
3.3.6.1 Workers Per Day (WRKP)
3.3.6.2 Responsible Party Coding (RESP)
3.3.6.3 Area of Work Coding (AREA)
3.3.6.4 Modification Number (MODF)
3.3.6.5 Bid Item Coding (BIDI)
3.3.6.6 Phase of Work Coding (PHAS)
3.3.6.7 Category of Work Coding (CATW)
3.3.6.8 Feature of Work Coding (FOW)
3.3.7 Contract Milestones and Constraints
3.3.7.1 Project Start Date Milestone and Constraint
3.3.7.2 End Project Finish Milestone and Constraint
3.3.7.3 Interim Completion Dates and Constraints
3.3.7.3.1 Start Phase
3.3.7.3.2 End Phase
3.3.8 Calendars
3.3.9 Open Ended Logic
3.3.10 Default Progress Data Disallowed
3.3.11 Out-of-Sequence Progress
3.3.12 Added and Deleted Activities

CONFORMED

3.3.13 Original Durations
3.3.14 Leads, Lags, and Start to Finish Relationships
3.3.15 Retained Logic
3.3.16 Percent Complete
3.3.17 Remaining Duration
3.3.18 Cost Loading of Closeout Activities
3.3.18.1 As-Built Drawings
3.3.18.2 O & M Manuals
3.3.19 Anticipated Adverse Weather
3.3.20 Early Completion Schedule and the Right to Finish Early
3.4 PROJECT SCHEDULE SUBMISSIONS
3.4.1 Preliminary Project Schedule Submission
3.4.2 Initial Project Schedule Submission
3.4.3 Periodic Schedule Updates
3.5 SUBMISSION REQUIREMENTS
3.5.1 Data CD/DVDs
3.5.2 Narrative Report
3.5.3 Schedule Reports
3.5.3.1 Activity Report
3.5.3.2 Logic Report
3.5.3.3 Total Float Report
3.5.3.4 Earnings Report by CLIN
3.5.3.5 Schedule Log
3.5.4 Network Diagram
3.5.4.1 Continuous Flow
3.5.4.2 Project Milestone Dates
3.5.4.3 Critical Path
3.5.4.4 Banding
3.5.4.5 Cash Flow / Schedule Variance Control (SVC) Diagram
3.6 PERIODIC SCHEDULE UPDATE
3.6.1 Periodic Schedule Update Meetings
3.6.2 Update Submission Following Progress Meeting
3.7 WEEKLY PROGRESS MEETINGS
3.8 REQUESTS FOR TIME EXTENSIONS
3.8.1 Justification of Delay
3.8.2 Time Impact Analysis (Prospective Analysis)
3.8.3 Forensic Schedule Analysis (Retrospective Analysis)
3.8.4 Fragmentary Network (Fragnet)
3.8.5 Time Extension
3.8.6 Impact to Early Completion Schedule
3.9 FAILURE TO ACHIEVE PROGRESS
3.9.1 Artificially Improving Progress
3.9.2 Failure to Perform
3.9.3 Recovery Schedule
3.10 OWNERSHIP OF FLOAT
3.11 TRANSFER OF SCHEDULE DATA INTO RMS/QCS
3.12 PRIMAVERA P6 MANDATORY REQUIREMENTS

-- End of Section Table of Contents --

CONFORMED

SECTION 01 32 01.00 10

PROJECT SCHEDULE
02/15

PART 1 GENERAL

1.1 REFERENCES

The publications listed below form a part of this specification to the extent referenced. The publications are referred to within the text by the basic designation only.

AACE INTERNATIONAL (AACE)

AACE 29R-03	(2011) Forensic Schedule Analysis
AACE 52R-06	(2006) Time Impact Analysis - As Applied in Construction

U.S. ARMY CORPS OF ENGINEERS (USACE)

ER 1-1-11	(1995) Administration -- Progress, Schedules, and Network Analysis Systems

1.2 SUBMITTALS

Government approval is required for submittals with a "G" designation; submittals not having a "G" designation are for information only. When used, a designation following the "G" designation identifies the office that will review the submittal for the Government. Submit the following in accordance with Section 01 33 00 SUBMITTAL PROCEDURES:

SD-01 Preconstruction Submittals

Project Scheduler Qualifications; G
Preliminary Project Schedule; G
Initial Project Schedule; G
Periodic Schedule Update; G

1.3 PROJECT SCHEDULER QUALIFICATIONS

Designate an authorized representative to be responsible for the preparation of the schedule and all required updating and production of reports. The authorized representative must have a minimum of 2-years experience scheduling construction projects similar in size and nature to this project with scheduling software that meets the requirements of this specification. Representative must have a comprehensive knowledge of CPM scheduling principles and application.

PART 2 PRODUCTS

2.1 SOFTWARE

The scheduling software utilized to produce and update the schedules required herein must be capable of meeting all requirements of this

CONFORMED

specification.

2.1.1 Government Default Software

The Government intends to use Primavera P6.

2.1.2 Contractor Software

Scheduling software used by the contractor must be commercially available from the software vendor for purchase with vendor software support agreements available. The software routine used to create the required sdef file must be created and supported by the software manufacturer.

2.1.2.1 Primavera

If Primavera P6 is selected for use, provide the "xer" export file in a version of P6 importable by the Government system.

2.1.2.2 Other Than Primavera

If the contractor chooses software other than Primavera P6, that is compliant with this specification, provide for the Government's use two licenses, two computers, and training for two Government employees in the use of the software. These computers will be stand-alone and not connected to Government network. Computers and licenses will be returned at project completion.

PART 3 EXECUTION

3.1 GENERAL REQUIREMENTS

Prepare for approval a Project Schedule, as specified herein, pursuant to FAR Clause 52.236-15, SCHEDULE FOR CONSTRUCTION CONTRACTS. Show in the schedule the proposed sequence to perform the work and dates contemplated for starting and completing all schedule activities. The scheduling of the entire project is required. The scheduling of is the responsibility of the Contractor. Contractor management personnel must actively participate in its development. working on the project must also contribute in developing and maintaining an accurate Project Schedule. Provide a schedule that is a forward planning as well as a project monitoring tool. Use the Critical Path Method (CPM) of network calculation to generate all Project Schedules. Prepare each Project Schedule using the Precedence Diagram Method (PDM).

3.2 BASIS FOR PAYMENT AND COST LOADING

The schedule is the basis for determining contract earnings during each update period and therefore the amount of each progress payment. The aggregate value of all activities coded to a contract CLIN must equal the value of the CLIN.

3.2.1 Activity Cost Loading

Activity cost loading must be reasonable and without front-end loading. Provide additional documentation to demonstrate reasonableness if requested by the Contracting Officer.

CONFORMED

3.2.2 Withholdings / Payment Rejection

Failure to meet the requirements of this specification may result in the disapproval of the preliminary, initial or periodic schedule updates and subsequent rejection of payment requests until compliance is met.

In the event that the Contracting Officer directs schedule revisions and those revisions have not been included in subsequent Project Schedule revisions or updates, the Contracting Officer may withhold 10 percent of pay request amount from each payment period until such revisions to the project schedule have been made.

3.3 PROJECT SCHEDULE DETAILED REQUIREMENTS

3.3.1 Level of Detail Required

Develop the Project Schedule to the appropriate level of detail to address major milestones and to allow for satisfactory project planning and execution. Failure to develop the Project Schedule to an appropriate level of detail will result in its disapproval. The Contracting Officer will consider, but is not limited to, the following characteristics and requirements to determine appropriate level of detail:

3.3.2 Activity Durations

Reasonable activity durations are those that allow the progress of ongoing activities to be accurately determined between update periods. Less than 2 percent of all non-procurement activities may have Original Durations (OD) greater than 20 work days or 30 calendar days.

3.3.3 Procurement Activities

Include activities associated with the critical submittals and their approvals, procurement, fabrication, and delivery of long lead materials, equipment, fabricated assemblies, and supplies. Long lead procurement activities are those with an anticipated procurement sequence of over 90 calendar days.

3.3.4 Mandatory Tasks

Include the following activities/tasks in the initial project schedule and all updates.

a. Submission, review and acceptance of SD-01 Preconstruction Submittals (individual activity for each).

b. Submission of mechanical/electrical/information systems layoutdrawings.

c. Long procurement activities

d. Submission and approval of O & M manuals.

e. Submission and approval of as-built drawings.

f. Contractor's pre-final inspection.

g. Correction of punch list from Contractor's pre-final inspection.

h. Government's pre-final inspection.

CONFORMED

i. Correction of punch list from Government's pre-final inspection.

j. Final inspection.

3.3.5 Government Activities

Show Government and other agency activities that could impact progress. These activities include, but are not limited to: environmental permit approvals by State regulators, inspections, utility tie-in, Government Furnished Equipment (GFE) and Notice to Proceed (NTP) for phasing requirements.

3.3.6 Standard Activity Coding Dictionary

Use the activity coding structure defined in the Standard Data Exchange Format (SDEF) in ER 1-1-11. This exact structure is mandatory. Develop and assign all Activity Codes to activities as detailed herein. A template SDEF compatible schedule backup file is available on the QCS web site: http://rms.usace.army.mil.

The SDEF format is as follows:

Field	Activity Code	Length	Description
1	WRKP	3	Workers per day
2	RESP	4	Responsible party
3	AREA	4	Area of work
4	MODF	6	Modification Number
5	BIDI	6	Bid Item (CLIN)
6	PHAS	2	Phase of work
7	CATW	1	Category of work
8	FOW	20	Feature of work*
*Some systems require that FEATURE OF WORK values be placed in several activity code fields. The notation shown is for Primavera P6. Refer to the specific software guidelines with respect to the FEATURE OF WORK field requirements.			

3.3.6.1 Workers Per Day (WRKP)

Assign Workers per Day for all field construction or direct work activities, if directed by the Contracting Officer. Workers per day is based on the average number of workers expected each day to perform a task for the duration of that activity.

3.3.6.2 Responsible Party Coding (RESP)

Assign responsibility code for all activities to the Prime Contractor, Subcontractor(s) or Government agency(ies) responsible for performing the

CONFORMED

activity.

a. Activities coded with a Government Responsibility code include, but are not limited to: Government approvals, Government design reviews, environmental permit approvals by State regulators, Government Furnished Property/Equipment (GFP) and Notice to Proceed (NTP) for phasing requirements.

b. Activities cannot have more than one Responsibility Code. Examples of acceptable activity code values are: DOR (for the designer of record); ELEC (for the electrical subcontractor); MECH (for the mechanical subcontractor); and GOVT (for USACE).

3.3.6.3 Area of Work Coding (AREA)

Assign Work Area code to activities based upon the work area in which the activity occurs. Define work areas based on resource constraints or space constraints that would preclude a resource, such as a particular trade or craft work crew from working in more than one work area at a time due to restraints on resources or space. Examples of Work Area Coding include different areas within a floor of a building, different floors within a building, and different buildings within a complex of buildings. Activities cannot have more than one Work Area Code.

Not all activities are required to be Work Area coded. A lack of Work Area coding indicates the activity is not resource or space constrained.

3.3.6.4 Modification Number (MODF)

Assign a Modification Number Code to any activity or sequence of activities added to the schedule as a result of a Contract Modification, when approved by Contracting Officer. Key all Code values to the Government's modification numbering system. An activity can have only one Modification Number Code.

3.3.6.5 Bid Item Coding (BIDI)

Assign a Bid Item Code to all activities using the Contract Line Item Schedule (CLIN) to which the activity belongs, even when an activity is not cost loaded. An activity can have only one BIDI Code.

3.3.6.6 Phase of Work Coding (PHAS)

Assign Phase of Work Code to all activities. Examples of phase of work are Each activity can have only one Phase of Work code.

a. Code proposed fast track design and construction phases proposed to allow filtering and organizing the schedule by fast track design and construction packages.

b. If the contract specifies phasing with separately defined performance periods, identify a Phase Code to allow filtering and organizing the schedule accordingly.

3.3.6.7 Category of Work Coding (CATW)

Assign a Category of Work Code to all activities. Category of Work Codes include, but are not limited to procurement, fabrication, weather sensitive installation, non-weather sensitive installation, start-up, and testing

CONFORMED

activities. Each activity can have no more than one Category of Work Code.

3.3.6.8 Feature of Work Coding (FOW)

Assign a Feature of Work Code to appropriate activities based on the Definable Feature of Work to which the activity belongs based on the approved QC plan.

Definable Feature of Work is defined in Section 01 45 00.00 10 QUALITY CONTROL. An activity can have only one Feature of Work Code.

3.3.7 Contract Milestones and Constraints

Milestone activities are to be used for significant project events including, but not limited to, project phasing, project start and end activities, or interim completion dates. The use of artificial float constraints such as "zero free float" or "zero total float" are prohibited.

Mandatory constraints that ignore or effect network logic are prohibited. No constrained dates are allowed in the schedule other than those specified herein. Submit additional constraints to the Contracting Officer for approval on a case by case basis.

3.3.7.1 Project Start Date Milestone and Constraint

The first activity in the project schedule must be a start milestone titled "NTP Acknowledged," which must have a "Start On" constraint date equal to the date that the NTP is acknowledged.

3.3.7.2 End Project Finish Milestone and Constraint

The last activity in the schedule must be a finish milestone titled "End Project."

Constrain the project schedule to the Contract Completion Date in such a way that if the schedule calculates an early finish, then the float calculation for "End Project" milestone reflects positive float on the longest path. If the project schedule calculates a late finish, then the "End Project" milestone float calculation reflects negative float on the longest path. The Government is under no obligation to accelerate Government activities to support a Contractor's early completion.

3.3.7.3 Interim Completion Dates and Constraints

Constrain contractually specified interim completion dates to show negative float when the calculated late finish date of the last activity in that phase is later than the specified interim completion date.

3.3.7.3.1 Start Phase

Use a start milestone as the first activity for a project phase. Call the start milestone "Start Phase X" where "X" refers to the phase of work.

3.3.7.3.2 End Phase

Use a finish milestone as the last activity for a project phase. Call the finish milestone "End Phase X" where "X" refers to the phase of work.

CONFORMED

3.3.8 Calendars

Schedule activities on a Calendar to which the activity logically belongs. Develop calendars to accommodate any contract defined work period such as a 7-day calendar for Government Acceptance activities, concrete cure times, etc. Develop the default Calendar to match the physical work plan with non-work periods identified including weekends and holidays. Develop sSeasonal Calendar(s) and assign to seasonally affected activities as applicable.

If an activity is weather sensitive it should be assigned to a calendar showing non-work days on a monthly basis, with the non-work days selected at random across the weeks of the calendar, using the anticipated days provided in the contract clause TIME EXTENSIONS FOR UNUSUALLY SEVERE WEATHER. Assign non-work days over a seven-day week as weather records are compiled on seven-day weeks, which may cause some of the weather related non-work days to fall on weekends.

3.3.9 Open Ended Logic

Only two open ended activities are allowed: the first activity "NTP Acknowledged" may have no predecessor logic, and the last activity - "End Project" may have no successor logic.

Predecessor open ended logic may be allowed in a time impact analyses upon the Contracting Officer's approval.

3.3.10 Default Progress Data Disallowed

Actual Start and Finish dates must not automatically update with default mechanisms included in the scheduling software. Updating of the percent complete and the remaining duration of any activity must be independent functions. Disable program features that calculate one of these parameters from the other. Activity Actual Start (AS) and Actual Finish (AF) dates assigned during the updating process must match those dates provided in the Contractor Quality Control Reports. Failure to document the AS and AF dates in the Daily Quality Control report will result in disapproval of the Contractor's schedule.

3.3.11 Out-of-Sequence Progress

Activities that have progressed before all preceding logic has been satisfied (Out-of-Sequence Progress) will be allowed only on a case-by-case basis subject to approval by the Contracting Officer. Propose logic corrections to eliminate out of sequence progress or justify not changing the sequencing for approval prior to submitting an updated project schedule. Address out of sequence progress or logic changes in the Narrative Report and in the periodic schedule update meetings.

3.3.12 Added and Deleted Activities

Do not delete activities from the project schedule or add new activities to the schedule without approval from the Contracting Officer. Activity ID and description changes are considered new activities and cannot be changed without Contracting Officer approval.

3.3.13 Original Durations

Activity Original Durations (OD) must be reasonable to perform the work

CONFORMED

item. OD changes are prohibited unless justification is provided and approved by the Contracting Officer.

3.3.14 Leads, Lags, and Start to Finish Relationships

Lags must be reasonable as determined by the Government and not used in place of realistic original durations, must not be in place to artificially absorb float, or to replace proper schedule logic.

a. Leads (negative lags) are prohibited.

b. Start to Finish (SF) relationships are prohibited.

3.3.15 Retained Logic

Schedule calculations must retain the logic between predecessors and successors ("retained logic" mode) even when the successor activity(s) starts and the predecessor activity(s) has not finished (out-of-sequence progress). Software features that in effect sever the tie between predecessor and successor activities when the successor has started and the predecessor logic is not satisfied ("progress override") are not be allowed.

3.3.16 Percent Complete

Update the percent complete for each activity started, based on the realistic assessment of earned value. Activities which are complete but for remaining minor punch list work and which do not restrain the initiation of successor activities may be declared 100 percent complete to allow for proper schedule management.

3.3.17 Remaining Duration

Update the remaining duration for each activity based on the number of estimated work days it will take to complete the activity. Remaining duration may not mathematically correlate with percentage found under paragraph entitled Percent Complete.

3.3.18 Cost Loading of Closeout Activities

Cost load the "Correction of punch list from Government pre-final inspection" activity(ies) not less than 1 percent of the present contract value. Activity(ies) may be declared 100 percent complete upon the Government's verification of completion and correction of all punch list work identified during Government pre-final inspection(s).

3.3.18.1 As-Built Drawings

If there is no separate contract line item (CLIN) for as-built drawings, cost load the "Submission and approval of as-built drawings" activity not less than $35,000 or 1 percent of the present contract value, which ever is greater, up to $200,000. Activity will be declared 100 percent complete upon the Government's approval.

3.3.18.2 O & M Manuals

Cost load the "Submission and approval of O & M manuals" activity not less than $20,000. Activity will be declared 100 percent complete upon the Government's approval of all O & M manuals.

CONFORMED

3.3.19 Anticipated Adverse Weather

Paragraph applicable to contracts with clause entitled TIME EXTENSIONS FOR UNUSUALLY SEVERE WEATHER. Reflect the number of anticipated adverse weather delays allocated to a weather sensitive activity in the activity's calendar.

3.3.20 Early Completion Schedule and the Right to Finish Early

An Early Completion Schedule is an Initial Project Schedule (IPS) that indicates all scope of the required contract work will be completed before the contractually required completion date.

a. No IPS indicating an Early Completion will be accepted without being fully resource-loaded (including crew sizes and manhours) and the Government agreeing that the schedule is reasonable and achievable.

b. The Government is under no obligation to accelerate work items it is responsible for to ensure that the early completion is met nor is it responsible to modify incremental funding (if applicable) for the project to meet the contractor's accelerated work.

3.4 PROJECT SCHEDULE SUBMISSIONS

Provide the submissions as described below. The data CD/DVD, reports, and network diagrams required for each submission are contained in paragraph SUBMISSION REQUIREMENTS. If the Contractor fails or refuses to furnish the information and schedule updates as set forth herein, then the Contractor will be deemed not to have provided an estimate upon which a progress payment can be made.

Review comments made by the Government on the schedule(s) do not relieve the Contractor from compliance with requirements of the Contract Documents.

3.4.1 Preliminary Project Schedule Submission

Within 15 calendar days after the NTP is acknowledged submit the Preliminary Project Schedule defining the planned operations detailed for the first 90 calendar days for approval. The approved Preliminary Project Schedule will be used for payment purposes not to exceed 90 calendar days after NTP. Completely cost load the Preliminary Project Schedule to balance the contract award CLINS shown on the Price Schedule. The Preliminary Project Schedule may be summary in nature for the remaining performance period. It must be early start and late finish constrained and logically tied as specified. The Preliminary Project Schedule forms the basis for the Initial Project Schedule specified herein and must include all of the required plan and program preparations, submissions and approvals identified in the contract (for example, Quality Control Plan, Safety Plan, and Environmental Protection Plan) as well as design activities, planned submissions of all early design packages, permitting activities, design review conference activities, and other non-construction activities intended to occur within the first 90 calendar days. Government acceptance of the associated design package(s) and all other specified Program and Plan approvals must occur prior to any planned construction activities. Activity code any activities that are summary in nature after the first 90 calendar days with Bid Item (CLIN) code (BIDI), Responsibility Code (RESP) and Feature of Work code (FOW).

CONFORMED

3.4.2 Initial Project Schedule Submission

Submit the Initial Project Schedule for approval within 42 calendar days after notice to proceed is issued. The schedule must demonstrate a reasonable and realistic sequence of activities which represent all work through the entire contract performance period. No payment will be made for work items not fully detailed in the Project Schedule.

3.4.3 Periodic Schedule Updates

Update the Project Schedule on a regular basis, monthly at a minimum. Provide a draft Periodic Schedule Update for review at the schedule update meetings as prescribed in the paragraph PERIODIC SCHEDULE UPDATE MEETINGS. These updates will enable the Government to assess Contractor's progress.

a. Update information including Actual Start Dates (AS), Actual Finish Dates (AF), Remaining Durations (RD), and Percent Complete is subject to the approval of the Government at the meeting.

b. AS and AF dates must match the date(s) reported on the Contractor's Quality Control Report for an activity start or finish.

3.5 SUBMISSION REQUIREMENTS

Submit the following items for the Preliminary Schedule, Initial Schedule, and every Periodic Schedule Update throughout the life of the project:

3.5.1 Data CD/DVDs

Provide two sets of data CD/DVDs containing the current project schedule and all previously submitted schedules in the format of the scheduling software (e.g. .xer). Also include on the data CD/DVDs the Narrative Report and all required Schedule Reports. Label each CD/DVD indicating the type of schedule (Preliminary, Initial, Update), full contract number, Data Date and file name. Each schedule must have a unique file name and use project specific settings.

3.5.2 Narrative Report

Provide a Narrative Report with each schedule submission. The Narrative Report is expected to communicate to the Government the thorough analysis of the schedule output and the plans to compensate for any problems, either current or potential, which are revealed through that analysis. Include the following information as minimum in the Narrative Report:

a. Identify and discuss the work scheduled to start in the next update period.

b. A description of activities along the two most critical paths where the total float is less than or equal to 20 work days.

c. A description of current and anticipated problem areas or delaying factors and their impact and an explanation of corrective actions taken or required to be taken.

d. Identify and explain why activities based on their calculated late dates should have either started or finished during the update period but did not.

CONFORMED

e. Identify and discuss all schedule changes by activity ID and activity name including what specifically was changed and why the change was needed. Include at a minimum new and deleted activities, logic changes, duration changes, calendar changes, lag changes, resource changes, and actual start and finish date changes.

f. Identify and discuss out-of-sequence work.

3.5.3 Schedule Reports

The format, filtering, organizing and sorting for each schedule report will be as directed by the Contracting Officer. Typically, reports contain Activity Numbers, Activity Description, Original Duration, Remaining Duration, Early Start Date, Early Finish Date, Late Start Date, Late Finish Date, Total Float, Actual Start Date, Actual Finish Date, and Percent Complete. Provide the reports electronically in .pdf format. Provide 2 set(s) of hardcopy reports. The following lists typical reports that will be requested:

3.5.3.1 Activity Report

List of all activities sorted according to activity number.

3.5.3.2 Logic Report

List of detailed predecessor and successor activities for every activity in ascending order by activity number.

3.5.3.3 Total Float Report

A list of all incomplete activities sorted in ascending order of total float. List activities which have the same amount of total float in ascending order of Early Start Dates. Do not show completed activities on this report.

3.5.3.4 Earnings Report by CLIN

A compilation of the Total Earnings on the project from the NTP to the data date, which reflects the earnings of activities based on the agreements made in the schedule update meeting defined herein. Provided a complete schedule update has been furnished, this report serves as the basis of determining progress payments. Group activities by CLIN number and sort by activity number. Provide a total CLIN percent earned value, CLIN percent complete, and project percent complete. The printed report must contain the following for each activity: the Activity Number, Activity Description, Original Budgeted Amount, Earnings to Date, Earnings this period, Total Quantity, Quantity to Date, and Percent Complete (based on cost).

3.5.3.5 Schedule Log

Provide a Scheduling/Leveling Report generated from the current project schedule being submitted.

3.5.4 Network Diagram

The Network Diagram is required for the Preliminary, Initial and Periodic Updates. Depict and display the order and interdependence of activities and the sequence in which the work is to be accomplished. The Contracting Officer will use, but is not limited to, the following conditions to review

CONFORMED

compliance with this paragraph:

3.5.4.1 Continuous Flow

Show a continuous flow from left to right with no arrows from right to left. Show the activity number, description, duration, and estimated earned value on the diagram.

3.5.4.2 Project Milestone Dates

Show dates on the diagram for start of project, any contract required interim completion dates, and contract completion dates.

3.5.4.3 Critical Path

Show all activities on the critical path. The critical path is defined as the longest path.

3.5.4.4 Banding

Organize activities using the WBS or as otherwise directed to assist in the understanding of the activity sequence. Typically, this flow will group activities by major elements of work, category of work, work area and/or responsibility.

3.5.4.5 Cash Flow / Schedule Variance Control (SVC) Diagram

With each schedule submission, provide a SVC diagram showing 1) Cash Flow S-Curves indicating planned project cost based on projected early and late activity finish dates, and 2) Earned Value to-date.

3.6 PERIODIC SCHEDULE UPDATE

3.6.1 Periodic Schedule Update Meetings

Conduct periodic schedule update meetings for the purpose of reviewing the proposed Periodic Schedule Update, Narrative Report, Schedule Reports, and progress payment. Conduct meetings at least monthly within five days of the proposed schedule data date. Provide a computer with the scheduling software loaded and a projector which allows all meeting participants to view the proposed schedule during the meeting. The Contractor's authorized scheduler must organize, group, sort, filter, perform schedule revisions as needed and review functions as requested by the Contractor and/or Government. The meeting is a working interactive exchange which allows the Government and Contractor the opportunity to review the updated schedule on a real time and interactive basis. The meeting will last no longer than 8 hours. Provide a draft of the proposed narrative report and schedule data file to the Government a minimum of two workdays in advance of the meeting. The Contractor's Project Manager and scheduler must attend the meeting with the authorized representative of the Contracting Officer. Superintendents, foremen and major subcontractors must attend the meeting as required to discuss the project schedule and work. Following the periodic schedule update meeting, make corrections to the draft submission. Include only those changes approved by the Government in the submission and invoice for payment.

3.6.2 Update Submission Following Progress Meeting

Submit the complete Periodic Schedule Update of the Project Schedule

CONFORMED

containing all approved progress, revisions, and adjustments, pursuant to paragraph SUBMISSION REQUIREMENTS not later than 4 work days after the periodic schedule update meeting.

3.7 WEEKLY PROGRESS MEETINGS

Conduct a weekly meeting with the Government (or as otherwise mutually agreed to) between the meetings described in paragraph entitled PERIODIC SCHEDULE UPDATE MEETINGS for the purpose of jointly reviewing the actual progress of the project as compared to the as planned progress and to review planned activities for the upcoming two weeks. Use the current approved schedule update for the purposes of this meeting and for the production and review of reports. At the weekly progress meeting, address the status of RFIs, RFPs and Submittals.

3.8 REQUESTS FOR TIME EXTENSIONS

Provide a justification of delay to the Contracting Officer in accordance with the contract provisions and clauses for approval within 10 days of a delay occurring. Also prepare a time impact analysis for each Government request for proposal (RFP) to justify time extensions.

3.8.1 Justification of Delay

Provide a description of the event(s) that caused the delay and/or impact to the work. As part of the description, identify all schedule activities impacted. Show that the event that caused the delay/impact was the responsibility of the Government. Provide a time impact analysis that demonstrates the effects of the delay or impact on the project completion date or interim completion date(s). Evaluate multiple impacts chronologically; each with its own justification of delay. With multiple impacts consider any concurrency of delay. A time extension and the schedule fragnet becomes part of the project schedule and all future schedule updates upon approval by the Contracting Officer.

3.8.2 Time Impact Analysis (Prospective Analysis)

Prepare a time impact analysis for approval by the Contracting Officer based on industry standard AACE 52R-06. Utilize a copy of the last approved schedule prior to the first day of the impact or delay for the time impact analysis. If Contracting Officer determines the time frame between the last approved schedule and the first day of impact is too great, prepare an interim updated schedule to perform the time impact analysis. Unless approved by the Contracting Officer, no other changes may be incorporated into the schedule being used to justify the time impact.

3.8.3 Forensic Schedule Analysis (Retrospective Analysis)

Prepare an analysis for approval by the Contracting Officer based on industry standard AACE 29R-03.

3.8.4 Fragmentary Network (Fragnet)

Prepare a proposed fragnet for time impact analysis consisting of a sequence of new activities that are proposed to be added to the project schedule to demonstrate the influence of the delay or impact to the project's contractual dates. Clearly show how the proposed fragnet is to be tied into the project schedule including all predecessors and successors to the fragnet activities. The proposed fragnet must be approved by the

CONFORMED

Contracting Officer prior to incorporation into the project schedule.

3.8.5 Time Extension

The Contracting Officer must approve the Justification of Delay including the time impact analysis before a time extension will be granted. No time extension will be granted unless the delay consumes all available Project Float and extends the projected finish date ("End Project" milestone) beyond the Contract Completion Date. The time extension will be in calendar days.

Actual delays that are found to be caused by the Contractor's own actions, which result in a calculated schedule delay will not be a cause for an extension to the performance period, completion date, or any interim milestone date.

3.8.6 Impact to Early Completion Schedule

No extended overhead will be paid for delay prior to the original Contract Completion Date for an Early Completion IPS unless the Contractor actually performed work in accordance with that Early Completion Schedule. The Contractor must show that an early completion was achievable had it not been for the impact.

3.9 FAILURE TO ACHIEVE PROGRESS

Should the progress fall behind the approved project schedule for reasons other than those that are excusable within the terms of the contract, the Contracting Officer may require provision of a written recovery plan for approval. The plan must detail how progress will be made-up to include which activities will be accelerated by adding additional crews, longer work hours, extra work days, etc.

3.9.1 Artificially Improving Progress

Artificially improving progress by means such as, but not limited to, revising the schedule logic, modifying or adding constraints, shortening activity durations, or changing calendars in the project schedule is prohibited. Indicate assumptions made and the basis for any logic, constraint, duration and calendar changes used in the creation of the recovery plan. Any additional resources, manpower, or daily and weekly work hour changes proposed in the recovery plan must be evident at the work site and documented in the daily report along with the Schedule Narrative Report.

3.9.2 Failure to Perform

Failure to perform work and maintain progress in accordance with the supplemental recovery plan may result in an interim and final unsatisfactory performance rating and/or may result in corrective action directed by the Contracting Officer pursuant to FAR 52.236-15 Schedules for Construction Contracts, FAR 52.249-10 Default (Fixed-Price Construction), and other contract provisions.

3.9.3 Recovery Schedule

Should the Contracting Officer find it necessary, submit a recovery schedule pursuant to FAR 52.236-15 Schedules for Construction Contracts.

CONFORMED

3.10 OWNERSHIP OF FLOAT

Except for the provision given in the paragraph IMPACT TO EARLY COMPLETION SCHEDULE, float available in the schedule, at any time, may not be considered for the exclusive use of either the Government or the Contractor including activity and/or project float. Activity float is the number of work days that an activity can be delayed without causing a delay to the "End Project" finish milestone. Project float (if applicable) is the number of work days between the projected early finish and the contract completion date milestone.

3.11 TRANSFER OF SCHEDULE DATA INTO RMS/QCS

Import the schedule data into the Quality Control System (QCS) and export the QCS data to the Government. This data is considered to be additional supporting data in a form and detail required by the Contracting Officer pursuant to FAR 52.232-5 - Payments under Fixed-Price Construction Contracts. The receipt of a proper payment request pursuant to FAR 52.232-27 - Prompt Payment for Construction Contracts is contingent upon the Government receiving both acceptable and approvable hard copies and matching electronic export from QCS of the application for progress payment.

3.12 PRIMAVERA P6 MANDATORY REQUIREMENTS

If Primavera P6 is being used, request a backup file template (.xer) from the Government, if one is available, prior to building the schedule. The following settings are mandatory and required in all schedule submissions to the Government:

a. Activity Codes must be Project Level, not Global or EPS level.

b. Calendars must be Project Level, not Global or Resource level.

c. Activity Duration Types must be set to "Fixed Duration & Units".

d. Percent Complete Types must be set to "Physical".

e. Time Period Admin Preferences must remain the default "8.0 hr/day, 40 hr/week, 172 hr/month, 2000 hr/year". Set Calendar Work Hours/Day to 8.0 Hour days.

f. Set Schedule Option for defining Critical Activities to "Longest Path".

g. Set Schedule Option for defining progressed activities to "Retained Logic".

h. Set up cost loading using a single lump sum labor resource. The Price/Unit must be $1/hr, Default Units/Time must be "8h/d", and settings "Auto Compute Actuals" and "Calculate costs from units" selected.

i. Activity ID's must not exceed 10 characters.

j. Activity Names must have the most defining and detailed description within the first 30 characters.

-- End of Section --

CONFORMED

SECTION TABLE OF CONTENTS

DIVISION 01 - GENERAL REQUIREMENTS

SECTION 01 33 00

SUBMITTAL PROCEDURES

05/11

PART 1 GENERAL

1.1 SUMMARY
1.2 DEFINITIONS
1.2.1 Submittal Descriptions (SD)
1.2.2 Approving Authority
1.2.3 Work
1.3 SUBMITTALS
1.4 SUBMITTAL CLASSIFICATION
1.4.1 Government Approved
1.4.2 Information Only
1.5 PREPARATION
1.5.1 Transmittal Form
1.6 VARIATIONS
1.6.1 Considering Variations
1.6.2 Proposing Variations
1.6.3 Warranting That Variations Are Compatible
1.6.4 Review Schedule Is Modified
1.7 SUBMITTAL REGISTER
1.7.1 Use of Submittal Register
1.7.2 Contractor Use of Submittal Register
1.7.3 Approving Authority Use of Submittal Register
1.7.4 Copies Delivered to the Government
1.8 SCHEDULING
1.9 GOVERNMENT APPROVING AUTHORITY
1.9.1 Review Notations
1.10 DISAPPROVED OR REJECTED SUBMITTALS
1.11 APPROVED/ACCEPTED SUBMITTALS
1.12 APPROVED SAMPLES
1.13 WITHHOLDING OF PAYMENT
1.14 STAMPS

PART 2 PRODUCTS

PART 3 EXECUTION

-- End of Section Table of Contents --

CONFORMED

SECTION 01 33 00

SUBMITTAL PROCEDURES
05/11

PART 1 GENERAL

1.1 SUMMARY

The Contracting Officer may request submittals in addition to those specified when deemed necessary to adequately describe the work covered in the respective sections.

Units of weights and measures used on all submittals are to be the same as those used in the contract drawings.

Each submittal is to be complete and in sufficient detail to allow ready determination of compliance with contract requirements.

Contractor's to check and approve all items prior to submittal and stamp, sign, and date indicating action taken. Proposed deviations from the contract requirements are to be clearly identified. Include within submittals items such as: Contractor's, manufacturer's, or fabricator's drawings; descriptive literature including (but not limited to) catalog cuts, diagrams, operating charts or curves; test reports; test cylinders; samples; O&M manuals (including parts list); certifications; warranties; and other such required submittals.

Submittals requiring Government approval are to be scheduled and made prior to the acquisition of the material or equipment covered thereby. Pick up and dispose of samples not incorporated into the work in accordance with manufacturer's Material Safety Data Sheets (MSDS) and in compliance with existing laws and regulations.

1.2 DEFINITIONS

1.2.1 Submittal Descriptions (SD)

Submittals requirements are specified in the technical sections. Submittals are identified by Submittal Description (SD) numbers and titles as follows:

SD-01 Preconstruction Submittals

Submittals which are required prior to the start of the next major phase of the construction on a multi-phase contract, includes schedules, tabular list of data, or tabular list including location, features, or other pertinent information regarding products, materials, equipment, or components to be used in the work.

Certificates of insurance

Surety bonds

List of proposed Subcontractors

List of proposed products

CONFORMED

Construction progress schedule

Network Analysis Schedule (NAS)

Submittal register

Schedule of prices

Health and safety plan

Work plan

Quality Control (QC) plan

Environmental protection plan

SD-02 Shop Drawings

Drawings, diagrams and schedules specifically prepared to illustrate some portion of the work.

Diagrams and instructions from a manufacturer or fabricator for use in producing the product and as aids to the Contractor for integrating the product or system into the project.

Drawings prepared by or for the Contractor to show how multiple systems and interdisciplinary work will be coordinated.

SD-03 Product Data

Catalog cuts, illustrations, schedules, diagrams, performance charts, instructions and brochures illustrating size, physical appearance and other characteristics of materials, systems or equipment for some portion of the work.

Samples of warranty language when the contract requires extended product warranties.

SD-04 Samples

Fabricated or unfabricated physical examples of materials, equipment or workmanship that illustrate functional and aesthetic characteristics of a material or product and establish standards by which the work can be judged.

Color samples from the manufacturer's standard line (or custom color samples if specified) to be used in selecting or approving colors for the project.

Field samples and mock-ups constructed on the project site establish standards by which the ensuring work can be judged. Includes assemblies or portions of assemblies which are to be incorporated into the project and those which will be removed at conclusion of the work.

SD-05 Design Data

Design calculations, mix designs, analyses or other data pertaining to a part of work.

CONFORMED

SD-06 Test Reports

Report signed by authorized official of testing laboratory that a material, product or system identical to the material, product or system to be provided has been tested in accord with specified requirements. (Testing must have been within three years of date of contract award for the project.)

Report which includes findings of a test required to be performed by the Contractor on an actual portion of the work or prototype prepared for the project before shipment to job site.

Report which includes finding of a test made at the job site or on sample taken from the job site, on portion of work during or after installation.

Investigation reports.

Daily logs and checklists.

Final acceptance test and operational test procedure.

SD-07 Certificates

Statements printed on the manufacturer's letterhead and signed by responsible officials of manufacturer of product, system or material attesting that product, system or material meets specification requirements. Must be dated after award of project contract and clearly name the project.

Document required of Contractor, or of a manufacturer, supplier, installer or Subcontractor through Contractor, the purpose of which is to further quality of orderly progression of a portion of the work by documenting procedures, acceptability of methods or personnel qualifications.

Confined space entry permits.

Text of posted operating instructions.

SD-08 Manufacturer's Instructions

Preprinted material describing installation of a product, system or material, including special notices and Material Safety Data Sheets concerning impedances, hazards and safety precautions.

SD-10 Operation and Maintenance Data

Data that is furnished by the manufacturer, or the system provider, to the equipment operating and maintenance personnel, including manufacturer's help and product line documentation necessary to maintain and install equipment. This data is needed by operating and maintenance personnel for the safe and efficient operation, maintenance and repair of the item.

This data is intended to be incorporated in an operations and maintenance manual or control system.

CONFORMED

SD-11 Closeout Submittals

Documentation to record compliance with technical or administrative requirements or to establish an administrative mechanism.

Special requirements necessary to properly close out a construction contract. For example, Record Drawings and as-built drawings. Also, submittal requirements necessary to properly close out a major phase of construction on a multi-phase contract.

1.2.2 Approving Authority

Office or designated person authorized to approve submittal.

1.2.3 Work

As used in this section, on- and off-site construction required by contract documents, including labor necessary to produce submittals, construction, materials, products, equipment, and systems incorporated or to be incorporated in such construction.

1.3 SUBMITTALS

Government approval is required for submittals with a "G" designation; submittals not having a "G" designation are for information only. When used, a designation following the "G" designation identifies the office that will review the submittal for the Government. Submit the following in accordance with this section.

SD-01 Preconstruction Submittals

Submittal Register; G

1.4 SUBMITTAL CLASSIFICATION

Submittals are classified as follows:

1.4.1 Government Approved

Within the terms of the Contract Clause entitled, "Specifications and Drawings for Construction," they are considered to be "shop drawings."

1.4.2 Information Only

They are not considered to be "shop drawings" within the terms of the Contract Clause referred to above.

1.5 PREPARATION

1.5.1 Transmittal Form

Use QCS to generate the transmittal form (ENG Form 4025) for submitting both Government approved and information only submittals in accordance with the instructions on the reverse side of the form. Properly complete this form by filling out all the heading blank spaces and identifying each item submitted. Exercise special care to ensure proper listing of the specification paragraph and sheet number of the contract drawings pertinent to the data submitted for each item.

CONFORMED

Electronic File Format: Provide submittals in electronic format, with the exception of material samples required for SD-04 Samples items. Compile each submittal file as a single, complete document, to include the Transmittal Form described within. Name the electronic submittal file specifically according to its contents, coordinate the file naming convention with the Contracting Officer. Electronic files must be of sufficient quality that all information is legible. Use PDF as the electronic format, unless otherwise specified or directed by the Contracting Officer. Generate PDF files from original documents with bookmarks so that the text included in the PDF file is both searchable and can be copied. If documents are scanned, Optical Character Resolution (OCR) routines are required. Index and bookmark files exceeding 30 pages to allow efficient navigation of the file. When required, the electronic file must include a valid electronic signature, or scan of a signature.

Email electronic submittal documents fewer than 10MB to an email address as directed by the Contracting Officer. Provide electronic documents over 10MB on an optical disc, or through an electronic file sharing system such as the AMRDEC SAFE Web Application located at the following website: https://safe.amrdec.army.mil/safe>https://safe.amrdec.army.mil/safe/

Provide hard copies of submittals when requested by the Contracting Officer. Up to three hard copies of any submittal may be requested at the discretion of the Contracting Officer, at no additional cost to the Government.

1.6 VARIATIONS

Variations from contract requirements require Government approval pursuant to contract Clause FAR 52.236-21 and will be considered where advantageous to Government.

1.6.1 Considering Variations

Discussion with Contracting Officer prior to submission will help ensure functional and quality requirements are met and minimize rejections and re-submittals. When contemplating a variation which results in lower cost, consider submission of the variation as a Value Engineering Change Proposal (VECP).

Specifically point out variations from contract requirements in transmittal letters. Failure to point out deviations may result in the Government requiring rejection and removal of such work at no additional cost to the Government.

1.6.2 Proposing Variations

When proposing variation, deliver written request to the Contracting Officer, with documentation of the nature and features of the variation and why the variation is desirable and beneficial to Government. If lower cost is a benefit, also include an estimate of the cost savings. In addition to documentation required for variation, include the submittals required for the item. Clearly mark the proposed variation in all documentation.

Check the column "variation" of ENG Form 4025 for submittals which include proposed deviations requested by the Contractor. Set forth in writing the reason for any deviations and annotate such deviations on the submittal. The Government reserves the right to rescind inadvertent approval of submittals containing unnoted deviations.

CONFORMED

1.6.3 Warranting That Variations Are Compatible

When delivering a variation for approval, Contractor warrants that this contract has been reviewed to establish that the variation, if incorporated, will be compatible with other elements of work.

1.6.4 Review Schedule Is Modified

In addition to normal submittal review period, a period of 30 working days will be allowed for consideration by the Government of submittals with variations.

1.7 SUBMITTAL REGISTER

Prepare and maintain submittal register, as the work progresses. Do not change data which is output in columns (c), (d), (e), and (f) as delivered by Government; retain data which is output in columns (a), (g), (h), and (i) as approved. A submittal register showing items of equipment and materials for which submittals are required by the specifications is provided as Appendix B. This list may not be all inclusive and additional submittals may be required. Maintain a submittal register for the project in accordance with Section 01 45 00.10 10 QUALITY CONTROL SYSTEM (QCS).

Column (c): Lists specification section in which submittal is required.

Column (d): Lists each submittal description (SD No. and type, e.g. SD-02 Shop Drawings) required in each specification section.

Column (e): Lists one principal paragraph in specification section where a material or product is specified. This listing is only to facilitate locating submitted requirements. Do not consider entries in column (e) as limiting project requirements.

1.7.1 Use of Submittal Register

Submit submittal register. Submit with QC plan and project schedule. Verify that all submittals required for project are listed and add missing submittals. Coordinate and complete the following fields on the register submitted with the QC plan and the project schedule:

Column (a) Activity Number: Activity number from the project schedule.

Column (g) Contractor Submit Date: Scheduled date for approving authority to receive submittals.

Column (h) Contractor Approval Date: Date Contractor needs approval of submittal.

Column (i) Contractor Material: Date that Contractor needs material delivered to Contractor control.

1.7.2 Contractor Use of Submittal Register

Update the following fields with each submittal throughout contract.

Column (b) Transmittal Number: Contractor assigned list of

CONFORMED

consecutive numbers.

Column (j) Action Code (k): Date of action used to record Contractor's review when forwarding submittals to QC.

Column (l) List date of submittal transmission.

Column (q) List date approval received.

1.7.3 Approving Authority Use of Submittal Register

Update the following fields.

Column (b) Transmittal Number: Contractor assigned list of consecutive numbers.

Column (l) List date of submittal receipt.

Column (m) through (p) List Date related to review actions.

Column (q) List date returned to Contractor.

1.7.4 Copies Delivered to the Government

Deliver one copy of submittal register updated by Contractor to Government with each invoice request.

1.8 SCHEDULING

Schedule and submit concurrently submittals covering component items forming a system or items that are interrelated. Include certifications to be submitted with the pertinent drawings at the same time. No delay damages or time extensions will be allowed for time lost in late submittals.

a. Coordinate scheduling, sequencing, preparing and processing of submittals with performance of work so that work will not be delayed by submittal processing. Allow for potential resubmittal of requirements.

b. Submittals called for by the contract documents will be listed on the register. If a submittal is called for but does not pertain to the contract work, the Contractor is to include the submittal in the register and annotate it "N/A" with a brief explanation. Approval by the Contracting Officer does not relieve the Contractor of supplying submittals required by the contract documents but which have been omitted from the register or marked "N/A."

c. Re-submit register and annotate monthly by the Contractor with actual submission and approval dates. When all items on the register have been fully approved, no further re-submittal is required.

d. Carefully control procurement operations to ensure that each individual submittal is made on or before the Contractor scheduled submittal date shown on the approved "Submittal Register."

1.9 GOVERNMENT APPROVING AUTHORITY

When approving authority is Contracting Officer, the Government will:

a. Note date on which submittal was received.

CONFORMED

b. Review submittals for approval within scheduling period specified and only for conformance with project design concepts and compliance with contract documents.

c. Identify returned submittals with one of the actions defined in paragraph entitled, "Review Notations," of this section and with markings appropriate for action indicated.

Upon completion of review of submittals requiring Government approval, stamp and date approved submittals. Three copies of the approved submittal will be retained by the Contracting Officer and four copies of the submittal will be returned to the Contractor. If the Government performs a conformance review of other Designer of Record approved submittals, the submittals will be so identified and returned, as described above.

1.9.1 Review Notations

Contracting Officer review will be completed within 30 calendar days after date of submission. Submittals will be returned to the Contractor with the following notations:

a. Submittals marked "approved" or "accepted" authorize the Contractor to proceed with the work covered.

b. Submittals marked "approved as noted" "or approved except as noted, resubmittal not required," authorize the Contractor to proceed with the work covered provided he takes no exception to the corrections.

c. Submittals marked "not approved" or "disapproved," or "revise and resubmit," indicate noncompliance with the contract requirements or design concept, or that submittal is incomplete. Resubmit with appropriate changes. No work shall proceed for this item until resubmittal is approved.

d. Submittals marked "not reviewed" will indicate submittal has been previously reviewed and approved, is not required, does not have evidence of being reviewed and approved by Contractor, or is not complete. A submittal marked "not reviewed" will be returned with an explanation of the reason it is not reviewed. Resubmit submittals returned for lack of review by Contractor or for being incomplete, with appropriate action, coordination, or change.

1.10 DISAPPROVED OR REJECTED SUBMITTALS

Contractor shall make corrections required by the Contracting Officer. If the Contractor considers any correction or notation on the returned submittals to constitute a change to the contract drawings or specifications; notice as required under the clause entitled, "Changes," is to be given to the Contracting Officer. Contractor is responsible for the dimensions and design of connection details and construction of work. Failure to point out deviations may result in the Government requiring rejection and removal of such work at the Contractor's expense.

If changes are necessary to submittals, the Contractor shall make such revisions and submission of the submittals in accordance with the procedures above. No item of work requiring a submittal change is to be accomplished until the changed submittals are approved.

CONFORMED

1.11 APPROVED/ACCEPTED SUBMITTALS

The Contracting Officer's approval or acceptance of submittals is not to be construed as a complete check, and indicates only that the general method of construction, materials, detailing and other information are satisfactory.

Approval or acceptance will not relieve the Contractor of the responsibility for any error which may exist, as the Contractor under the Contractor Quality Control (CQC) requirements of this contract is responsible for.

After submittals have been approved or accepted by the Contracting Officer, no resubmittal for the purpose of substituting materials or equipment will be considered unless accompanied by an explanation of why a substitution is necessary.

1.12 APPROVED SAMPLES

Approval of a sample is only for the characteristics or use named in such approval and is not be construed to change or modify any contract requirements. Before submitting samples, the Contractor to assure that the materials or equipment will be available in quantities required in the project. No change or substitution will be permitted after a sample has been approved.

Match the approved samples for materials and equipment incorporated in the work. If requested, approved samples, including those which may be damaged in testing, will be returned to the Contractor, at his expense, upon completion of the contract. Samples not approved will also be returned to the Contractor at its expense, if so requested.

Failure of any materials to pass the specified tests will be sufficient cause for refusal to consider, under this contract, any further samples of the same brand or make of that material. Government reserves the right to disapprove any material or equipment which previously has proved unsatisfactory in service.

Samples of various materials or equipment delivered on the site or in place may be taken by the Contracting Officer for testing. Samples failing to meet contract requirements will automatically void previous approvals. Contractor to replace such materials or equipment to meet contract requirements.

Approval of the Contractor's samples by the Contracting Officer does not relieve the Contractor of his responsibilities under the contract.

1.13 WITHHOLDING OF PAYMENT

Payment for materials incorporated in the work will not be made if required approvals have not been obtained.

1.14 STAMPS

Stamps used by the Contractor on the submittal data to certify that the submittal meets contract requirements is to be similar to the following:

CONFORMED

CONTRACTOR

(Firm Name)

_____ Approved

_____ Approved with corrections as noted on submittal data and/or attached sheets(s)

SIGNATURE: _____

TITLE: _____

DATE: _____

PART 2 PRODUCTS

Not Used

PART 3 EXECUTION

Not Used

-- End of Section --

CONFORMED

SECTION TABLE OF CONTENTS

DIVISION 01 - GENERAL REQUIREMENTS

SECTION 01 35 26

GOVERNMENTAL SAFETY REQUIREMENTS

02/12

PART 1 GENERAL

1.1 REFERENCES
1.2 DEFINITIONS
1.3 SUBMITTALS
1.4 REGULATORY REQUIREMENTS
1.5 SITE QUALIFICATIONS, DUTIES AND MEETINGS
1.5.1 Personnel Qualifications
1.5.1.1 Site Safety and Health Officer (SSHO)
1.5.2 Personnel Duties
1.5.2.1 Site Safety and Health Officer (SSHO)
1.5.3 Meetings
1.5.3.1 Preconstruction Conference
1.6 ACCIDENT PREVENTION PLAN (APP)
1.6.1 EM 385-1-1 Contents
1.7 ACTIVITY HAZARD ANALYSIS (AHA)
1.8 DISPLAY OF SAFETY INFORMATION
1.9 SITE SAFETY REFERENCE MATERIALS
1.10 EMERGENCY MEDICAL TREATMENT
1.11 NOTIFICATIONS AND REPORTS
1.11.1 Accident Notification
1.11.2 Accident Reports
1.12 HOT WORK
1.13 FACILITY OCCUPANCY CLOSURE
1.14 SEVERE STORM PLAN
1.15 CONFINED SPACE ENTRY REQUIREMENTS.

PART 2 PRODUCTS

PART 3 EXECUTION

3.1 CONSTRUCTION AND OTHER WORK
3.1.1 Hazardous Material Exclusions
3.1.2 Unforeseen Hazardous Material
3.2 PRE-OUTAGE COORDINATION MEETING
3.3 CONTROL OF HAZARDOUS ENERGY (LOCKOUT/TAGOUT)
3.4 FALL HAZARD PROTECTION AND PREVENTION PROGRAM
3.4.1 Training
3.4.2 Fall Protection Equipment and Systems
3.4.2.1 Personal Fall Arrest Equipment
3.4.3 Horizontal Lifelines
3.4.4 Guardrails and Safety Nets
3.4.5 Rescue and Evacuation Procedures
3.5 EQUIPMENT
3.5.1 Material Handling Equipment

CONFORMED

3.5.2 Weight Handling Equipment
3.6 EXCAVATIONS
3.6.1 Utility Locations
3.6.2 Utility Location Verification
3.6.3 Utilities Within and Under Concrete, Bituminous Asphalt, and Other Impervious Surfaces
3.6.4 Shoring Systems
3.6.5 Trenching Machinery
3.7 ELECTRICAL
3.8 WORK IN CONFINED SPACES

-- End of Section Table of Contents --

CONFORMED

SECTION 01 35 26

GOVERNMENTAL SAFETY REQUIREMENTS
02/12

PART 1 GENERAL

1.1 REFERENCES

The publications listed below form a part of this specification to the extent referenced. The publications are referred to within the text by the basic designation only.

AMERICAN SOCIETY OF SAFETY ENGINEERS (ASSE/SAFE)

ASSE/SAFE A10.32	(2012) Fall Protection
ASSE/SAFE A10.34	(2001; R 2012) Protection of the Public on or Adjacent to Construction Sites
ASSE/SAFE Z359.1	(2007) Safety Requirements for Personal Fall Arrest Systems, Subsystems and Components

ASME INTERNATIONAL (ASME)

ASME B30.22	(2010) Articulating Boom Cranes
ASME B30.3	(2012) Tower Cranes
ASME B30.5	(2011) Mobile and Locomotive Cranes
ASME B30.8	(2010) Floating Cranes and Floating Derricks

NATIONAL FIRE PROTECTION ASSOCIATION (NFPA)

NFPA 10	(2013) Standard for Portable Fire Extinguishers
NFPA 51B	(2014) Standard for Fire Prevention During Welding, Cutting, and Other Hot Work
NFPA 70E	(2012; Errata 2012) Standard for Electrical Safety in the Workplace

U.S. ARMY CORPS OF ENGINEERS (USACE)

EM 385-1-1	(2014) Safety and Health Requirements Manual

U.S. NATIONAL ARCHIVES AND RECORDS ADMINISTRATION (NARA)

29 CFR 1910	Occupational Safety and Health Standards
29 CFR 1910.146	Permit-required Confined Spaces

CONFORMED

29 CFR 1926	Safety and Health Regulations for Construction
29 CFR 1926.16	Rules of Construction
29 CFR 1926.500	Fall Protection
CPL 2.100	(1995) Application of the Permit-Required Confined Spaces (PRCS) Standards, 29 CFR 1910.146

1.2 DEFINITIONS

a. High Visibility Accident. Any mishap which may generate publicity or high visibility.

b. Medical Treatment. Treatment administered by a physician or by registered professional personnel under the standing orders of a physician. Medical treatment does not include first aid treatment even through provided by a physician or registered personnel.

c. Recordable Injuries or Illnesses. Any work-related injury or illness that results in:

(1) Death, regardless of the time between the injury and death, or the length of the illness;

(2) Days away from work (any time lost after day of injury/illness onset);

(3) Restricted work;

(4) Transfer to another job;

(5) Medical treatment beyond first aid;

(6) Loss of consciousness; or

(7) A significant injury or illness diagnosed by a physician or other licensed health care professional, even if it did not result in (1) through (6) above.

d. "USACE" property and equipment specified in USACE EM 385-1-1 should be interpreted as Government property and equipment.

1.3 SUBMITTALS

Government approval is required for submittals with a "G" designation; submittals not having a "G" designation are for information only. When used, a designation following the "G" designation identifies the office that will review the submittal for the Government. Submit the following in accordance with Section 01 33 00 SUBMITTAL PROCEDURES:

SD-01 Preconstruction Submittals

Accident Prevention Plan (APP); G; A

Activity Hazard Analysis (AHA); G; A

CONFORMED

SD-06 Test Reports

Notifications and Reports

Submit reports as their incidence occurs, in accordance with the requirements of the paragraph, "Notifications and Reports."

Accident Reports; G

SD-07 Certificates

Confined Space Entry Permit

Hot work permit

1.4 REGULATORY REQUIREMENTS

In addition to the detailed requirements included in the provisions of this contract, comply with the most recent edition of USACE EM 385-1-1, and the following federal, state, and local laws, ordinances, criteria, rules and regulations. Submit matters of interpretation of standards to the appropriate administrative agency for resolution before starting work. Where the requirements of this specification, applicable laws, criteria, ordinances, regulations, and referenced documents vary, the most stringent requirements govern.

1.5 SITE QUALIFICATIONS, DUTIES AND MEETINGS

1.5.1 Personnel Qualifications

1.5.1.1 Site Safety and Health Officer (SSHO)

The SSHO must meet the requirements of EM 385-1-1 section 1 and ensure that the requirements of 29 CFR 1926.16 are met for the project. Provide a Safety oversight team that includes a minimum of one (1) person at each project site to function as the Site Safety and Health Officer (SSHO). The SSHO shall be at the work site at all times to implement and administer the Contractor's safety program and government-accepted Accident Prevention Plan. The SSHO's training, experience, and qualifications shall be as required by EM 385-1-1 paragraph 01.A.17, entitled SITE SAFETY AND HEALTH OFFICER (SSHO), and all associated sub-paragraphs.

A Competent Person shall be provided for all of the hazards identified in the Contractor's Safety and Health Program in accordance with the accepted Accident Prevention Plan, and shall be on-site at all times when the work that presents the hazards associated with their professional expertise is being performed. Provide the credentials of the Competent Persons(s) to the Contracting Officer for acceptance in consultation with the Safety Office.

1.5.2 Personnel Duties

1.5.2.1 Site Safety and Health Officer (SSHO)

The SSHO shall have no other duties. The SSHO shall:

a. Conduct daily safety and health inspections and maintain a written log which includes area/operation inspected, date of inspection, identified hazards, recommended corrective actions, estimated and actual dates of

CONFORMED

corrections. Attach safety inspection logs to the Contractors' daily quality control report.

b. Conduct mishap investigations and complete required reports. Maintain the OSHA Form 300 and Daily Production reports for prime and sub-contractors.

c. Maintain applicable safety reference material on the job site.

d. Attend the pre-construction conference, pre-work meetings including preparatory inspection meeting, and periodic in-progress meetings.

e. Implement and enforce accepted APPS and AHAs.

f. Maintain a safety and health deficiency tracking system that monitors outstanding deficiencies until resolution. Post a list of unresolved safety and health deficiencies on the safety bulletin board.

g. Ensure sub-contractor compliance with safety and health requirements.

h. Maintain a list of hazardous chemicals on site and their material safety data sheets.

Failure to perform the above duties will result in dismissal of the superintendent, QC Manager, and/or SSHO, and a project work stoppage. The project work stoppage will remain in effect pending approval of a suitable replacement.

1.5.3 Meetings

1.5.3.1 Preconstruction Conference

a. Contractor representatives who have a responsibility or significant role in accident prevention on the project shall attend the preconstruction conference. This includes the project superintendent, site safety and health officer, quality control supervisor, or any other assigned safety and health professionals who participated in the development of the APP (including the Activity Hazard Analyses (AHAs) and special plans, program and procedures associated with it).

b. Discuss the details of the submitted APP to include incorporated plans, programs, procedures and a listing of anticipated AHAs that will be developed and implemented during the performance of the contract. This list of proposed AHAs will be reviewed at the conference and an agreement will be reached between the Contractor and the Contracting Officer's representative as to which phases will require an analysis. In addition, establish a schedule for the preparation, submittal, review, and acceptance of AHAs to preclude project delays.

c. Deficiencies in the submitted APP will be brought to the attention of the Contractor at the preconstruction conference, and the Contractor shall revise the plan to correct deficiencies and re-submit it for acceptance. Do not begin work until there is an accepted APP.

1.6 ACCIDENT PREVENTION PLAN (APP)

Use a qualified person to prepare the written site-specific APP. Prepare the APP in accordance with the format and requirements of USACE EM 385-1-1

CONFORMED

and as supplemented herein. Cover all paragraph and subparagraph elements in USACE EM 385-1-1, Appendix A, "Minimum Basic Outline for Accident Prevention Plan". Specific requirements for some of the APP elements are described below. The APP shall be job-specific and address any unusual or unique aspects of the project or activity for which it is written. The APP shall interface with the Contractor's overall safety and health program. Include any portions of the Contractor's overall safety and health program referenced in the APP in the applicable APP element and made site-specific. The Government considers the Prime Contractor to be the "controlling authority" for all work site safety and health of the subcontractors. Contractors are responsible for informing their subcontractors of the safety provisions under the terms of the contract and the penalties for noncompliance, coordinating the work to prevent one craft from interfering with or creating hazardous working conditions for other crafts, and inspecting subcontractor operations to ensure that accident prevention responsibilities are being carried out. The APP shall be signed by the person and firm (senior person) preparing the APP, the Contractor, the on-site superintendent, the designated site safety and health officer, the Contractor Quality control Manager, and any designated CSP or CIH.

Submit the APP to the Contracting Officer 15 calendar days prior to the date of the preconstruction conference for acceptance. Work cannot proceed without an accepted APP.

Once accepted by the Contracting Officer, the APP and attachments will be enforced as part of the contract. Disregarding the provisions of this contract or the accepted APP will be cause for stopping of work, at the discretion of the Contracting Officer, until the matter has been rectified.

Once work begins, changes to the accepted APP shall be made with the knowledge and concurrence of the Contracting Officer, project superintendent, SSHO and quality control manager. Should any severe hazard exposure, i.e. imminent danger, become evident, stop work in the area, secure the area, and develop a plan to remove the exposure and control the hazard. Notify the Contracting Officer within 24 hours of discovery. Eliminate/remove the hazard. In the interim, take all necessary action to restore and maintain safe working conditions in order to safeguard onsite personnel, visitors, the public (as defined by ASSE/SAFE A10.34,) and the environment.

Copies of the accepted plan will be maintained at the resident engineer's office and at the job site. Continuously review and amend the APP, as necessary, throughout the life of the contract. Incorporate unusual or high-hazard activities not identified in the original APP as they are discovered.

1.6.1 EM 385-1-1 Contents

In addition to the requirements outlined in Appendix A of USACE EM 385-1-1, the following is required:

1. Excavation Plan. The safety and health aspects prepared in accordance with Section 31 00 00 EARTHWORK.

1.7 ACTIVITY HAZARD ANALYSIS (AHA)

The Activity Hazard Analysis (AHA) format shall be in accordance with USACE EM 385-1-1, Section 1. Submit the AHA for review at least 15 calendar days prior to the start of each phase. Format subsequent AHAs as amendments to

CONFORMED

the APP. The analysis should be used during daily inspections to ensure the implementation and effectiveness of the activity's safety and health controls.

The AHA list will be reviewed periodically at least monthly at the Contractor supervisory safety meeting and updated as necessary when procedures, scheduling, or hazards change.

Develop the activity hazard analyses using the project schedule as the basis for the activities performed. Any activities listed on the project schedule will require an AHA. The AHAs will be developed by the contractor, supplier or subcontractor and provided to the prime contractor for submittal to the Contracting Officer.

1.8 DISPLAY OF SAFETY INFORMATION

Within 5 calendar days after commencement of work, erect a safety bulletin board at the job site. Where size, duration, or logistics of project do not facilitate a bulletin board, an alternative method, acceptable to the Contracting Officer, that is accessible and includes all mandatory information for employee and visitor review, shall be deemed as meeting the requirement for a bulletin board. Include and maintain information on safety bulletin board as required by EM 385-1-1, section 01.A.06. Additional items required to be posted include:

a. Confined space entry permit.

b. Hot work permit.

1.9 SITE SAFETY REFERENCE MATERIALS

Maintain safety-related references applicable to the project, including those listed in the article "References." Maintain applicable equipment manufacturer's manuals.

1.10 EMERGENCY MEDICAL TREATMENT

Contractors will arrange for their own emergency medical treatment. Government has no responsibility to provide emergency medical treatment.

1.11 NOTIFICATIONS AND REPORTS

1.11.1 Accident Notification

Notify the Contracting Officer as soon as practical, but no more than four hours after any accident meeting the definition of Recordable Injuries or Illnesses or High Visibility Accidents, property damage equal to or greater than $2,000, or any weight handling equipment accident. Within notification include contractor name; contract title; type of contract; name of activity, installation or location where accident occurred; date and time of accident; names of personnel injured; extent of property damage, if any; extent of injury, if known, and brief description of accident (to include type of construction equipment used, PPE used, etc.). Preserve the conditions and evidence on the accident site until the Government investigation team arrives on-site and Government investigation is conducted.

CONFORMED

1.11.2 Accident Reports

a. Conduct an accident investigation for recordable injuries and illnesses, for Medical Treatment defined in paragraph DEFINITIONS, property damage accidents resulting in at least $20,000 in damages, and near misses as defined in EM 385-1-1, to establish the root cause(s) of the accident. Complete the applicable USACE Accident Report Form 3394, and provide the report to the Contracting Officer within 5 calendar day(s) of the accident. The Contracting Officer will provide copies of any required or special forms.

1.12 HOT WORK

Submit and obtain a written permit prior to performing "Hot Work" (welding, cutting, etc.) or operating other flame-producing/spark producing devices, from the Fire Division. A permit is required from the Explosives Safety Office for work in and around where explosives are processed, stored, or handled. CONTRACTORS ARE REQUIRED TO MEET ALL CRITERIA BEFORE A PERMIT IS ISSUED. Provide at least two (2) twenty (20) pound 4A:20 BC rated extinguishers for normal "Hot Work". All extinguishers shall be current inspection tagged, approved safety pin and tamper resistant seal. It is also mandatory to have a designated FIRE WATCH for any "Hot Work" done at this activity. The Fire Watch shall be trained in accordance with NFPA 51B and remain on-site for a minimum of 30 minutes after completion of the task or as specified on the hot work permit.

When starting work in the facility, require personnel to familiarize themselves with the location of the nearest fire alarm boxes and place in memory the emergency Fire Division phone number. ANY FIRE, NO MATTER HOW SMALL, SHALL BE REPORTED TO THE RESPONSIBLE FIRE DIVISION IMMEDIATELY.

1.13 FACILITY OCCUPANCY CLOSURE

Streets, walks, and other facilities occupied and used by the Government shall not be closed or obstructed without written permission from the Contracting Officer.

1.14 SEVERE STORM PLAN

In the event of a severe storm warning, the Contractor shall follow the project-specific Rain Event Action Plan (REAP). As detailed in Rain Event Action Plan of Section 01 57 20.00 10, the Contractor will have a qualified SWPPP practitioner prepare the REAP consistent with California Stormwater Quality Association guidelines for Rain Action Event Plan and shall implement it as required, including but not limited to:

a. Secure outside equipment and materials and place materials that could be damaged in protected areas.

b. Check surrounding area, including roof, for loose material, equipment, debris, and other objects that could be blown away or against existing facilities.

c. Ensure that temporary erosion controls are adequate.

1.15 CONFINED SPACE ENTRY REQUIREMENTS.

Contractors entering and working in confined spaces while performing general industry work are required to follow the requirements of OSHA

CONFORMED

29 CFR 1926 and comply with the requirements in Section 34 of EM 385-1-1, OSHA 29 CFR 1910, and OSHA 29 CFR 1910.146.

PART 2 PRODUCTS

Not used.

PART 3 EXECUTION

3.1 CONSTRUCTION AND OTHER WORK

3.1.1 Hazardous Material Exclusions

Notwithstanding any other hazardous material used in this contract, radioactive materials or instruments capable of producing ionizing/non-ionizing radiation (with the exception of radioactive material and devices used in accordance with USACE EM 385-1-1 such as nuclear density meters for compaction testing and laboratory equipment with radioactive sources) as well as materials which contain asbestos, mercury or polychlorinated biphenyls, di-isocynates, lead-based paint are prohibited. The Contracting Officer, upon written request by the Contractor, may consider exceptions to the use of any of the above excluded materials. Low mercury lamps used within fluorescent lighting fixtures are allowed as an exception without further Contracting Officer approval. Notify the Radiation Safety Officer (RSO) prior to excepted items of radioactive material and devices being brought to the project site.

3.1.2 Unforeseen Hazardous Material

The design should have identified materials such as PCB, lead paint, and friable and non-friable asbestos and other OSHA regulated chemicals (i.e. 29 CFR Part 1910.1000). If material, not indicated, that may be hazardous to human health upon disturbance during construction operations is encountered, stop that portion of work and notify the Contracting Officer immediately. Within 14 calendar days the Government will determine if the material is hazardous. If material is not hazardous or poses no danger, the Government will direct the Contractor to proceed without change. If material is hazardous and handling of the material is necessary to accomplish the work, the Government will issue a modification pursuant to "FAR 52.243-4, Changes" and "FAR 52.236-2, Differing Site Conditions."

3.2 PRE-OUTAGE COORDINATION MEETING

Apply for utility outages at least 30 days in advance. As a minimum, the request should include the location of the outage, utilities being affected, duration of outage and any necessary sketches. Special requirements for electrical outage requests are contained elsewhere in this specification section. Once approved, and prior to beginning work on the utility system requiring shut down, attend a pre-outage coordination meeting with the Contracting Officer and the Public Utilities representative to review the scope of work and the lock-out/tag-out procedures for worker protection. No work will be performed on energized electrical circuits unless proof is provided that no other means exist.

3.3 CONTROL OF HAZARDOUS ENERGY (LOCKOUT/TAGOUT)

Ensure that each employee is familiar with and complies with these procedures and USACE EM 385-1-1, Section 12, Control of Hazardous Energy.

CONFORMED

3.4 FALL HAZARD PROTECTION AND PREVENTION PROGRAM

Establish a fall protection and prevention program, for the protection of all employees exposed to fall hazards. Within the program include company policy, identify responsibilities, education and training requirements, fall hazard identification, prevention and control measures, inspection, storage, care and maintenance of fall protection equipment and rescue and evacuation procedures in accordance with ASSE/SAFE Z359.1.

3.4.1 Training

Institute a fall protection training program. As part of the Fall Hazard Protection and Prevention Program, provide training for each employee who might be exposed to fall hazards. Provide training by a competent person for fall protection in accordance with USACE EM 385-1-1, Section 21.B.

3.4.2 Fall Protection Equipment and Systems

Enforce use of the fall protection equipment and systems designated for each specific work activity in the Fall Protection and Prevention Plan and/or AHA at all times when an employee is exposed to a fall hazard. Protect employees from fall hazards as specified in EM 385-1-1, Section 21. In addition to the required fall protection systems, safety skiff, personal floatation devices, life rings etc., are required when working above or next to water in accordance with USACE EM 385-1-1, Paragraphs 21.N through 21.N.04. Personal fall arrest systems are required when working from an articulating or extendible boom, swing stages, or suspended platform. In addition, personal fall arrest systems are required when operating other equipment such as scissor lifts if the work platform is capable of being positioned outside the wheelbase. The need for tying-off in such equipment is to prevent ejection of the employee from the equipment during raising, lowering, or travel. Fall protection must comply with 29 CFR 1926.500, Subpart M, USACE EM 385-1-1 and ASSE/SAFE A10.32.

3.4.2.1 Personal Fall Arrest Equipment

Personal fall arrest equipment, systems, subsystems, and components shall meet ASSE/SAFE Z359.1. Only a full-body harness with a shock-absorbing lanyard or self-retracting lanyard is an acceptable personal fall arrest body support device. Body belts may only be used as a positioning device system (for uses such as steel reinforcing assembly and in addition to an approved fall arrest system). Harnesses shall have a fall arrest attachment affixed to the body support (usually a Dorsal D-ring) and specifically designated for attachment to the rest of the system. Only locking snap hooks and carabineers shall be used. Webbing, straps, and ropes shall be made of synthetic fiber. The maximum free fall distance when using fall arrest equipment shall not exceed 6 feet. The total fall distance and any swinging of the worker (pendulum-like motion) that can occur during a fall shall always be taken into consideration when attaching a person to a fall arrest system.

3.4.3 Horizontal Lifelines

Design, install, certify and use under the supervision of a qualified person horizontal lifelines for fall protection as part of a complete fall arrest system which maintains a safety factor of 2 (29 CFR 1926.500).

CONFORMED

3.4.4 Guardrails and Safety Nets

Design, install and use guardrails and safety nets in accordance with EM 385-1-1 and 29 CFR 1926 Subpart M.

3.4.5 Rescue and Evacuation Procedures

When personal fall arrest systems are used, ensure that the mishap victim can self-rescue or can be rescued promptly should a fall occur. Prepare a Rescue and Evacuation Plan and include a detailed discussion of the following: methods of rescue; methods of self-rescue; equipment used; training requirement; specialized training for the rescuers; procedures for requesting rescue and medical assistance; and transportation routes to a medical facility. Include the Rescue and Evacuation Plan within the Activity Hazard Analysis (AHA) for the phase of work, in the Fall Protection and Prevention (FP&P) Plan, and the Accident Prevention Plan (APP).

3.5 EQUIPMENT

3.5.1 Material Handling Equipment

a. Material handling equipment such as forklifts shall not be modified with work platform attachments for supporting employees unless specifically delineated in the manufacturer's printed operating instructions.

b. The use of hooks on equipment for lifting of material must be in accordance with manufacturer's printed instructions.

c. Operators of forklifts or power industrial trucks shall be licensed in accordance with OSHA.

3.5.2 Weight Handling Equipment

a. Equip cranes and derricks as specified in EM 385-1-1, section 16.

c. Comply with the crane manufacturer's specifications and limitations for erection and operation of cranes and hoists used in support of the work. Perform erection under the supervision of a designated person (as defined in ASME B30.5). Perform all testing in accordance with the manufacturer's recommended procedures.

d. Comply with ASME B30.5 for mobile and locomotive cranes, ASME B30.22 for articulating boom cranes, ASME B30.3 for construction tower cranes, and ASME B30.8 for floating cranes and floating derricks.

e. Under no circumstance shall a Contractor make a lift at or above 90 percent of the cranes rated capacity in any configuration.

f. When operating in the vicinity of overhead transmission lines, operators and riggers shall be alert to this special hazard and follow the requirements of USACE EM 385-1-1 Section 11 and ASME B30.5 or ASME B30.22 as applicable.

g. Do not crane suspended personnel work platforms (baskets) unless the Contractor proves that using any other access to the work location would provide a greater hazard to the workers or is impossible. Do not lift personnel with a line hoist or friction crane.

CONFORMED

h. Inspect, maintain, and recharge portable fire extinguishers as specified in NFPA 10, Standard for Portable Fire Extinguishers.

i. All employees must keep clear of loads about to be lifted and of suspended loads.

j. Use cribbing when performing lifts on outriggers.

k. The crane hook/block must be positioned directly over the load. Side loading of the crane is prohibited.

l. A physical barricade must be positioned to prevent personnel from entering the counterweight swing (tail swing) area of the crane.

m. Certification records which include the date of inspection, signature of the person performing the inspection, and the serial number or other identifier of the crane that was inspected shall always be available for review by Contracting Officer personnel.

n. Written reports listing the load test procedures used along with any repairs or alterations performed on the crane shall be available for review by Contracting Officer personnel.

o. Certify that all crane operators have been trained in proper use of all safety devices (e.g. anti-two block devices).

3.6 EXCAVATIONS

Soil classification must be performed by a competent person in accordance with 29 CFR 1926 and EM 385-1-1.

3.6.1 Utility Locations

All underground utilities in the work area must be positively identified by a third party, independent, private utility locating company in addition to any station locating service and coordinated with the station utility department.

3.6.2 Utility Location Verification

Physically verify underground utility locations, including utility depth, by hand digging using wood or fiberglass handled tools when any adjacent construction work is expected to come within three feet of the underground system. If construction is parallel to an existing utility expose the utility by hand digging every 100 feet if parallel within 5 feet of the excavation.

3.6.3 Utilities Within and Under Concrete, Bituminous Asphalt, and Other Impervious Surfaces

Utilities located within and under concrete slabs or pier structures, bridges, parking areas, and the like, are extremely difficult to identify. Whenever contract work involves chipping, saw cutting, or core drilling through concrete, bituminous asphalt or other impervious surfaces, the existing utility location must be coordinated with station utility departments in addition to location and depth verification by a third party, independent, private locating company. The third party, independent, private locating company shall locate utility depth by use of

CONFORMED

Ground Penetrating Radar (GPR), X-ray, bore scope, or ultrasound prior to the start of demolition and construction. Outages to isolate utility systems must be used in circumstances where utilities are unable to be positively identified. The use of historical drawings does not alleviate the contractor from meeting this requirement.

3.6.4 Shoring Systems

Trench and shoring systems must be identified in the accepted safety plan and AHA. Manufacture tabulated data and specifications or registered engineer tabulated data for shoring or benching systems shall be readily available on-site for review. Job-made shoring or shielding must have the registered professional engineer stamp, specifications, and tabulated data. Extreme care must be used when excavating near direct burial electric underground cables.

3.6.5 Trenching Machinery

Operate trenching machines with digging chain drives only when the spotters/laborers are in plain view of the operator. Provide operator and spotters/laborers training on the hazards of the digging chain drives with emphasis on the distance that needs to be maintained when the digging chain is operating. Keep documentation of the training on file at the project site.

3.7 ELECTRICAL

3.9.1 Portable Extension Cords

Size portable extension cords in accordance with manufacturer ratings for the tool to be powered and protected from damage. Immediately removed from service all damaged extension cords. Portable extension cords shall meet the requirements of EM 385-1-1, NFPA 70E, and OSHA electrical standards.

3.8 WORK IN CONFINED SPACES

Comply with the requirements in Section 34 of USACE EM 385-1-1, OSHA 29 CFR 1910, OSHA 29 CFR 1910.146, OSHA Directive CPL 2.100 and OSHA 29 CFR 1926. Any potential for a hazard in the confined space requires a permit system to be used.

a. Entry Procedures. Prohibit entry into a confined space by personnel for any purpose, including hot work, until the qualified person has conducted appropriate tests to ensure the confined or enclosed space is safe for the work intended and that all potential hazards are controlled or eliminated and documented. (See Section 34 of USACE EM 385-1-1 for entry procedures.) All hazards pertaining to the space shall be reviewed with each employee during review of the AHA.

b. Forced air ventilation is required for all confined space entry operations and the minimum air exchange requirements must be maintained to ensure exposure to any hazardous atmosphere is kept below its' action level.

c. Sewer wet wells require continuous atmosphere monitoring with audible alarm for toxic gas detection.

-- End of Section --

CONFORMED

SECTION TABLE OF CONTENTS

DIVISION 01 - GENERAL REQUIREMENTS

SECTION 01 42 00

SOURCES FOR REFERENCE PUBLICATIONS

11/14

PART 1 GENERAL

1.1 REFERENCES
1.2 ORDERING INFORMATION

PART 2 PRODUCTS

PART 3 EXECUTION

-- End of Section Table of Contents --

CONFORMED

SECTION 01 42 00

SOURCES FOR REFERENCE PUBLICATIONS
11/14

PART 1 GENERAL

1.1 REFERENCES

Various publications are referenced in other sections of the specifications to establish requirements for the work. These references are identified in each section by document number, date and title. The document number used in the citation is the number assigned by the standards producing organization (e.g. ASTM B564 Standard Specification for Nickel Alloy Forgings). However, when the standards producing organization has not assigned a number to a document, an identifying number has been assigned for reference purposes.

1.2 ORDERING INFORMATION

The addresses of the standards publishing organizations whose documents are referenced in other sections of these specifications are listed below, and if the source of the publications is different from the address of the sponsoring organization, that information is also provided. Documents listed in the specifications with numbers which were not assigned by the standards producing organization should be ordered from the source by title rather than by number.

AACE INTERNATIONAL (AACE)
1265 Suncrest Towne Centre Drive
Morgantown, WV 26505-1876 USA
Ph: 304-296-8444
Fax: 304-291-5728
E-mail: info@aacei.org
Internet: http://www.aacei.org

AMERICAN ASSOCIATION OF STATE HIGHWAY AND TRANSPORTATION OFFICIALS (AASHTO)
444 North Capital Street, NW, Suite 249
Washington, DC 20001
Ph: 202-624-5800
Fax: 202-624-5806
E-Mail: info@aashto.org
Internet: http://www.aashto.org

AMERICAN CONCRETE INSTITUTE INTERNATIONAL (ACI)
38800 Country Club Drive
Farmington Hills, MI 48331-3439
Ph: 248-848-3700
Fax: 248-848-3701
E-mail: bkstore@concrete.org
Internet: http://www.concrete.org

AMERICAN CONCRETE PIPE ASSOCIATION (ACPA)
8445 Freeport Parkway, Suite 350
Irving, TX 75063-2595

CONFORMED

Ph: 972-506-7216
Fax: 972-506-7682
E-mail: info@concrete-pipe.org
Internet: http://www.concrete-pipe.org

AMERICAN HARDBOARD ASSOCIATION (AHA)
1210 West Northwest Highway
Palatine, IL 60067
Ph: 847-934-8800
Fax: 847-934-8803
E-mail: aha@hardboard.org
Internet: http://domensino.com/AHA/

AMERICAN RAILWAY ENGINEERING AND MAINTENANCE-OF-WAY ASSOCIATION (AREMA)
4501 Forbes Blvd., Suite 130
Lanham, MD 20706
Ph: 301-459-3200
Fax: 301-459-8077
E-mail: bcaruso@arema.org
Internet: http://www.arema.org

AMERICAN SOCIETY OF SAFETY ENGINEERS (ASSE/SAFE)
1800 East Oakton Street
Des Plaines, IL 60018
Ph: 847-699-2929
Internet: http://www.asse.org

AMERICAN WELDING SOCIETY (AWS)
13301 NW 47 Ave
Miami, FL 33054

Ph: 888-WELDING, 305-824-1177, 305-826-6192
Fax: 305-826-6195
E-mail: customer.service@awspubs.com
Internet: http://www.aws.org

ASME INTERNATIONAL (ASME)
Two Park Avenue, M/S 10E
New York, NY 10016-5990
Ph: 800-843-2763
Fax: 973-882-1717
E-mail: customercare@asme.org
Internet: http://www.asme.org

ASTM INTERNATIONAL (ASTM)
100 Barr Harbor Drive, P.O. Box C700
West Conshohocken, PA 19428-2959
Ph: 877-909-2786
Internet: http://www.astm.org

CONCRETE REINFORCING STEEL INSTITUTE (CRSI)
933 North Plum Grove Road
Schaumburg, IL 60173-4758
Ph: 847-517-1200
Fax: 847-517-1206
Internet: http://www.crsi.org/

CONFORMED

CSA GROUP (CSA)
178 Rexdale Blvd.
Toronto, ON, Canada M9W 1R3
Ph: 416-747-4044
Fax: 416-747-2510
E-mail: sales@csagroup.org
Internet: http://www.csagroup.org/us/en/home

INTERNATIONAL CODE COUNCIL (ICC)
500 New Jersey Avenue, NW
6th Floor, Washington, DC 20001
Ph: 800-786-4452 or 888-422-7233
E-mail: order@iccsafe.org
Internet: www.iccsafe.org

NATIONAL FIRE PROTECTION ASSOCIATION (NFPA)
1 Batterymarch Park
Quincy, MA 02169-7471
Ph: 617-770-3000
Fax: 617-770-0700
Internet: http://www.nfpa.org

NATIONAL INSTITUTE OF STANDARDS AND TECHNOLOGY (NIST)
100 Bureau Drive
Stop 1070
Gaithersburg, MD 20899-1070
Ph: 301-975-NIST (6478)
E-mail: inquiries@nist.gov
Internet: http://www.nist.gov

NATIONAL PRECAST CONCRETE ASSOCIATION (NPCA)
1320 City Center Drive, Suite 200
Carmel, IN 46032
Ph: 317-571-9500 or 800 366 7731
Fax: 317-571-0041
Internet: www.precast.org

U.S. ARMY (DA)
U.S. Army Publishing Directorate
Ph: 703-614-3634
Internet: http://www.apd.army.mil

U.S. ARMY CORPS OF ENGINEERS (USACE)
CRD-C DOCUMENTS available on Internet:
http://www.wbdg.org/ccb/browse_cat.php?c=68
Order Other Documents from:
USACE Publications Depot
Attn: CEHEC-IM-PD
2803 52nd Avenue
Hyattsville, MD 20781-1102
Ph: 301-394-0081
Fax: 301-394-0084
E-mail: pubs-army@usace.army.mil
Internet: http://www.publications.usace.army.mil/
or
http://www.hnc.usace.army.mil/Missions/Engineering/TECHINFO.aspx

U.S. DEPARTMENT OF AGRICULTURE (USDA)
Order AMS Publications from:

CONFORMED

AGRICULTURAL MARKETING SERVICE (AMS)
Seed Regulatory and Testing Branch
801 Summit Crossing Place, Suite C
Gastonia, NC 28054-2193
Ph: 704-810-8871
Fax: 704-852-4189
E-mail: seed.ams@usda.gov
Internet: http://www.ams.usda.gov/lsg/seed.htm
Order Other Publications from:
U.S. Department of Agriculture, Rural Utilities Program
USDA Rural Development, Room 4051-S
Mail Stop 1510
1400 Independence Avenue SW
Washington, DC 20250-1510
Phone: (202) 720-9540
TTY: (800) 877-8339 (Federal Relay Service)
Fax: (202) 720-1725
Internet: http://www.rurdev.usda.gov/utilities_lp.html

U.S. ENVIRONMENTAL PROTECTION AGENCY (EPA)
Ariel Rios Building
1200 Pennsylvania Avenue, N.W.
Washington, DC 20004
Ph: 202-272-0167
Internet: http://www2.epa.gov/libraries
--- Some EPA documents are available only from:
National Technical Information Service (NTIS)
5301 Shawnee Road
Alexandria, VA 22312
Ph: 703-605-6050 or 1-688-584-8332
Fax: 703-605-6900
E-mail: info@ntis.gov
Internet: http://www.ntis.gov

U.S. FEDERAL HIGHWAY ADMINISTRATION (FHWA)
FHWA, Office of Safety
1200 New Jersey Ave., SE
Washington, DC 20590
Ph: 202-366-4000
Internet: http://www.fhwa.dot.gov
Order from:
Superintendent of Documents
U. S. Government Printing Office (GPO)
710 North Capitol Street, NW
Washington, DC 20401
Ph: 202-512-1800
Fax: 202-512-2104
E-mail: contactcenter@gpo.gov
Internet: http://www.gpoaccess.gov

U.S. GENERAL SERVICES ADMINISTRATION (GSA)
General Services Administration
1275 First St. NE
Washington, DC 20417
Ph: 202-501-1231
Internet: http://www.gsaelibrary.gsa.gov/ElibMain/home.do
Obtain documents from:
Acquisition Streamlining and Standardization Information System
(ASSIST)

CONFORMED

Internet: https://assist.dla.mil/online/start/; account registration required

U.S. NATIONAL ARCHIVES AND RECORDS ADMINISTRATION (NARA)
8601 Adelphi Road
College Park, MD 20740-6001
Ph: 866-272-6272
Fax: 301-837-0483
Internet: http://www.archives.gov
Order documents from:
Superintendent of Documents
U.S. Government Printing Office (GPO)
710 North Capitol Street, NW
Washington, DC 20401
Ph: 202-512-1800
Fax: 202-512-2104
E-mail: contactcenter@gpo.gov
Internet: http://www.gpoaccess.gov

PART 2 PRODUCTS

Not used

PART 3 EXECUTION

Not used

-- End of Section --

CONFORMED

SECTION TABLE OF CONTENTS

DIVISION 01 - GENERAL REQUIREMENTS

SECTION 01 45 00.00 10

QUALITY CONTROL

02/10

PART 1 GENERAL

1.1 REFERENCES
1.2 SUBMITTALS

PART 2 PRODUCTS

PART 3 EXECUTION

3.1 GENERAL REQUIREMENTS
3.2 QUALITY CONTROL PLAN
3.2.1 Content of the CQC Plan
3.2.2 Acceptance of Plan
3.2.3 Notification of Changes
3.3 COORDINATION MEETING
3.4 QUALITY CONTROL ORGANIZATION
3.4.1 Personnel Requirements
3.4.2 CQC System Manager
3.4.3 CQC Personnel
3.4.4 Additional Requirement
3.4.5 Organizational Changes
3.5 SUBMITTALS AND DELIVERABLES
3.6 CONTROL
3.6.1 Preparatory Phase
3.6.2 Initial Phase
3.6.3 Follow-up Phase
3.6.4 Additional Preparatory and Initial Phases
3.7 TESTS
3.7.1 Testing Procedure
3.7.2 Testing Laboratories
3.7.2.1 Capability Check
3.7.2.2 Capability Recheck
3.7.3 Onsite Laboratory
3.8 COMPLETION INSPECTION
3.8.1 Punch-Out Inspection
3.8.2 Pre-Final Inspection
3.8.3 Final Acceptance Inspection
3.9 DOCUMENTATION
3.10 SAMPLE FORMS
3.11 NOTIFICATION OF NONCOMPLIANCE

ATTACHMENTS:

Sample forms

CONFORMED

-- End of Section Table of Contents --

CONFORMED

SECTION 01 45 00.00 10

QUALITY CONTROL
02/10

PART 1 GENERAL

1.1 REFERENCES

The publications listed below form a part of this specification to the extent referenced. The publications are referred to within the text by the basic designation only.

ASTM INTERNATIONAL (ASTM)

ASTM D3740	(2012a) Minimum Requirements for Agencies Engaged in the Testing and/or Inspection of Soil and Rock as Used in Engineering Design and Construction
ASTM E329	(2014) Standard Specification for Agencies Engaged in the Testing and/or Inspection of Materials Used in Construction

INTERNATIONAL CODE COUNCIL (ICC)

ICC IBC	(2012) International Building Code

1.2 SUBMITTALS

Government approval is required for submittals with a "G" designation; submittals not having a "G" designation are for information only. When used, a designation following the "G" designation identifies the office that will review the submittal for the Government. Submit the following in accordance with Section 01 33 00 SUBMITTAL PROCEDURES:

SD-01 Preconstruction Submittals

Contractor Quality Control (CQC) Plan; G

PART 2 PRODUCTS

Not Used

PART 3 EXECUTION

3.1 GENERAL REQUIREMENTS

Establish and maintain an effective quality control (QC) system in compliance with the Contract Clause titled "Inspection of Construction." QC consist of plans, procedures, and organization necessary to produce an end product which complies with the contract requirements. Cover all operations, both onsite and offsite, and be keyed to the proposed sequence. The project superintendent will be held responsible for the quality of work and is subject to removal by the Contracting Officer for non-compliance with the quality requirements specified in the contract. In

CONFORMED

this context the highest level manager responsible for the overall construction activities at the site, including quality and production is the project superintendent. The project superintendent must maintain a physical presence at the site at all times and is responsible for all construction and related activities at the site, except as otherwise acceptable to the Contracting Officer.

3.2 QUALITY CONTROL PLAN

Submit no later than 14 days after receipt of notice to proceed, the Contractor Quality Control (CQC) Plan proposed to implement the requirements of the Contract Clause titled "Inspection of Construction." The Government will consider an interim plan for the first 30 days of operation. Construction will be permitted to begin only after acceptance of the CQC Plan or acceptance of an interim plan applicable to the particular feature of work to be started. Work outside of the accepted interim plan will not be permitted to begin until acceptance of a CQC Plan or another interim plan containing the additional work.

3.2.1 Content of the CQC Plan

Include, as a minimum, the following to cover all construction operations, both onsite and offsite, including work by subcontractors, fabricators, suppliers, and purchasing agents:

a. A description of the quality control organization, including a chart showing lines of authority and acknowledgment that the CQC staff will implement the three phase control system for all aspects of the work specified. Include a CQC System Manager who reports to the project superintendent.

b. The name, qualifications (in resume format), duties, responsibilities, and authorities of each person assigned a CQC function.

c. A copy of the letter to the CQC System Manager signed by an authorized official of the firm which describes the responsibilities and delegates sufficient authorities to adequately perform the functions of the CQC System Manager, including authority to stop work which is not in compliance with the contract. Letters of direction to all other various quality control representatives outlining duties, authorities, and responsibilities will be issued by the CQC System Manager. Copies of these letters must be furnished to the Government.

d. Procedures for scheduling, reviewing, certifying, and managing submittals, including those of subcontractors, offsite fabricators, suppliers, and purchasing agents. These procedures must be in accordance with Section 01 33 00 SUBMITTAL PROCEDURES.

e. Control, verification, and acceptance testing procedures for each specific test to include the test name, specification paragraph requiring test, feature of work to be tested, test frequency, and person responsible for each test. (Laboratory facilities approved by the Contracting Officer must be used.)

f. Procedures for tracking preparatory, initial, and follow-up control phases and control, verification, and acceptance tests including documentation.

g. Procedures for tracking construction deficiencies from identification

CONFORMED

through acceptable corrective action. Establish verification procedures that identified deficiencies have been corrected.

h. Reporting procedures, including proposed reporting formats.

i. A list of the definable features of work. A definable feature of work is a task which is separate and distinct from other tasks, has separate control requirements, and may be identified by different trades or disciplines, or it may be work by the same trade in a different environment. Although each section of the specifications may generally be considered as a definable feature of work, there are frequently more than one definable features under a particular section. This list will be agreed upon during the coordination meeting.

j. Any special inspection requirements as required in accordance with ICC IBC

3.2.2 Acceptance of Plan

Acceptance of the Contractor's plan is required prior to the start of construction. Acceptance is conditional and will be predicated on satisfactory performance during the construction. The Government reserves the right to require the Contractor to make changes in his CQC Plan and operations including removal of personnel, as necessary, to obtain the quality specified.

3.2.3 Notification of Changes

After acceptance of the CQC Plan, notify the Contracting Officer in writing of any proposed change. Proposed changes are subject to acceptance by the Contracting Officer.

3.3 COORDINATION MEETING

After the Preconstruction Conference, before start of construction, and prior to acceptance by the Government of the CQC Plan, meet with the Contracting Officer or Authorized Representative and discuss the Contractor's quality control system. Submit the CQC Plan a minimum of 7 calendar days prior to the Coordination Meeting. During the meeting, a mutual understanding of the system details must be developed, including the forms for recording the CQC operations, control activities, testing, administration of the system for both onsite and offsite work, and the interrelationship of Contractor's Management and control with the Government's Quality Assurance. Minutes of the meeting will be prepared by the CQC Manager, signed by both the Contractor and the Contracting Officer and will become a part of the contract file. There may be occasions when subsequent conferences will be called by either party to reconfirm mutual understandings and/or address deficiencies in the CQC system or procedures which may require corrective action by the Contractor.

3.4 QUALITY CONTROL ORGANIZATION

3.4.1 Personnel Requirements

The requirements for the CQC organization are a CQC System Manager and sufficient number of additional qualified personnel to ensure safety and contract compliance. The Safety and Health Manager must report directly to a senior project (or corporate) official independent from the CQC System Manager. The Safety and Health Manager will also serve as a member of the

CONFORMED

CQC Staff Personnel identified in the technical provisions as requiring specialized skills to assure the required work is being performed properly will also be included as part of the CQC organization. The Contractor's CQC staff must maintain a presence at the site at all times during progress of the work and have complete authority and responsibility to take any action necessary to ensure contract compliance. The CQC staff will be subject to acceptance by the Contracting Officer. Provide adequate office space, filing systems and other resources as necessary to maintain an effective and fully functional CQC organization. Promptly complete and furnish all letters, material submittals, shop drawing submittals, schedules and all other project documentation to the CQC organization. The CQC organization shall be responsible to maintain these documents and records at the site at all times, except as otherwise acceptable to the Contracting Officer.

3.4.2 CQC System Manager

Identify as CQC System Manager an individual within the onsite work organization who is responsible for overall management of CQC and have the authority to act in all CQC matters for the Contractor. The CQC System Manager must be a graduate engineer, graduate architect, or a graduate of construction management, with a minimum of 10 years construction experience on construction similar to this contract. This CQC System Manager must be on the site at all times during construction and be employed by the prime Contractor. The CQC System Manager must be assigned no other duties. Identify in the plan an alternate to serve in the event of the CQC System Manager's absence. The requirements for the alternate are the same as the CQC System Manager.

3.4.3 CQC Personnel

In addition to CQC personnel specified elsewhere in the contract, provide as part of the CQC organization specialized personnel to assist the CQC System Manager for the following areas: electrical, mechanical, civil, structural, environmental, architectural, materials technician, and submittals clerk. These individuals may be employees of the prime or subcontractor; be responsible to the CQC System Manager; be physically present at the construction site during work on their areas of responsibility; have the necessary education and/or experience in accordance with the experience matrix listed herein. These individuals may perform other duties but must be allowed sufficient time to perform their assigned quality control duties as described in the Quality Control Plan. A single person may cover more than one area provided that they are qualified to perform QC activities in each designated and that workload allows.

Experience Matrix	
Area	Qualifications
Civil	Graduate Civil Engineer or Construction Manager with 5 years experience in the type of work being performed on this project or technician with 10 years related experience

CONFORMED

Experience Matrix	
Area	Qualifications
Geotechnical	Graduate Geotechnical Engineer with 10 years experience in the type of work being performed on this project
Arborist	Graduate Arborist with 10 years experience in the type of work being performed on this project
Mechanical	Graduate Mechanical Engineer with 5 years experience or person 10 years of experience supervising mechanical features of work in the field with a construction company
Electrical	Graduate Electrical Engineer with 5 years related experience or person 10 years of experience supervising electrical features of work in the field with a construction company
Structural	Graduate Civil Engineer (with Structural Track or Focus) or Construction Manager with 5 years experience or person 10 years of experience supervising structural features of work in the field with a construction company
Environmental	Graduate Environmental Engineer with 5 years experience or Environmental Scientist with 10 years experience
Submittals	Submittal Clerk with 3 years experience
Concrete, Pavements and Soils	Materials Technician with 5 years experience for the appropriate area
Testing, Adjusting and Balancing (TAB) Personnel	Specialist must be a member of AABC or an experienced technician of the firm certified by the NEBB

CONFORMED

3.4.4 Additional Requirement

In addition to the above experience and/or education requirements the CQC System Manager must have completed the course entitled "Construction Quality Management For Contractors". This course is periodically offered by the San Francisco District of U.S. Army Corps of Engineers and others.

3.4.5 Organizational Changes

Maintain the CQC staff at full strength at all times. When it is necessary to make changes to the CQC staff, revise the CQC Plan to reflect the changes and submit the changes to the Contracting Officer for acceptance.

3.5 SUBMITTALS AND DELIVERABLES

Submittals, if needed, must comply with the requirements in Section 01 33 00 SUBMITTAL PROCEDURES. The CQC organization is responsible for certifying that all submittals and deliverables are in compliance with the contract

requirements.

3.6 CONTROL

Contractor Quality Control is the means by which the Contractor ensures that the construction, to include that of subcontractors and suppliers, complies with the requirements of the contract. At least three phases of control must be conducted by the CQC System Manager for each definable feature of the construction work as follows:

3.6.1 Preparatory Phase

This phase is performed prior to beginning work on each definable feature of work, after all required plans/documents/materials are approved/accepted, and after copies are at the work site. This phase includes:

a. A review of each paragraph of applicable specifications, reference codes, and standards. Make available during the preparatory inspection a copy of those sections of referenced codes and standards applicable to that portion of the work to be accomplished in the field. Maintain and make available in the field for use by Government personnel until final acceptance of the work.

b. Review of the contract drawings.

c. Check to assure that all materials and/or equipment have been tested, submitted, and approved.

d. Review of provisions that have been made to provide required control inspection and testing.

e. Examination of the work area to assure that all required preliminary work has been completed and is in compliance with the contract.

f. Examination of required materials, equipment, and sample work to assure that they are on hand, conform to approved shop drawings or submitted data, and are properly stored.

g. Review of the appropriate activity hazard analysis to assure safety requirements are met.

h. Discussion of procedures for controlling quality of the work including repetitive deficiencies. Document construction tolerances and workmanship standards for that feature of work.

i. Check to ensure that the portion of the plan for the work to be performed has been accepted by the Contracting Officer.

j. Discussion of the initial control phase.

k. The Government must be notified at least 72 hours in advance of beginning the preparatory control phase. Include a meeting conducted by the CQC System Manager and attended by the superintendent, other CQC personnel (as applicable), and the foreman responsible for the definable feature. Document the results of the preparatory phase actions by separate minutes prepared by the CQC System Manager and attach to the daily CQC report. Instruct applicable workers as to the acceptable level of workmanship required in order to meet contract specifications.

CONFORMED

3.6.2 Initial Phase

This phase is accomplished at the beginning of a definable feature of work. Accomplish the following:

a. Check work to ensure that it is in full compliance with contract requirements. Review minutes of the preparatory meeting.

b. Verify adequacy of controls to ensure full contract compliance. Verify required control inspection and testing.

c. Establish level of workmanship and verify that it meets minimum acceptable workmanship standards. Compare with required sample panels as appropriate.

d. Resolve all differences.

e. Check safety to include compliance with and upgrading of the safety plan and activity hazard analysis. Review the activity analysis with each worker.

f. The Government must be notified at least 72 hours in advance of beginning the initial phase. Prepare separate minutes of this phase by the CQC System Manager and attach to the daily CQC report. Indicate the exact location of initial phase for future reference and comparison with follow-up phases.

g. The initial phase should be repeated for each new crew to work onsite, or any time acceptable specified quality standards are not being met.

3.6.3 Follow-up Phase

Perform daily checks to assure control activities, including control testing, are providing continued compliance with contract requirements, until completion of the particular feature of work. Record the checks in the CQC documentation. Conduct final follow-up checks and correct all deficiencies prior to the start of additional features of work which may be affected by the deficient work. Do not build upon nor conceal non-conforming work.

3.6.4 Additional Preparatory and Initial Phases

Conduct additional preparatory and initial phases on the same definable features of work if: the quality of on-going work is unacceptable; if there are changes in the applicable CQC staff, onsite production supervision or work crew; if work on a definable feature is resumed after a substantial period of inactivity; or if other problems develop.

3.7 TESTS

3.7.1 Testing Procedure

Perform specified or required tests to verify that control measures are adequate to provide a product which conforms to contract requirements. Upon request, furnish to the Government duplicate samples of test specimens for possible testing by the Government. Testing includes operation and/or acceptance tests when specified. Procure the services of a Corps of Engineers approved testing laboratory or establish an approved testing

CONFORMED

laboratory at the project site. Perform the following activities and record and provide the following data:

a. Verify that testing procedures comply with contract requirements.

b. Verify that facilities and testing equipment are available and comply with testing standards.

c. Check test instrument calibration data against certified standards.

d. Verify that recording forms and test identification control number system, including all of the test documentation requirements, have been prepared.

e. Record results of all tests taken, both passing and failing on the CQC report for the date taken. Specification paragraph reference, location where tests were taken, and the sequential control number identifying the test. If approved by the Contracting Officer, actual test reports may be submitted later with a reference to the test number and date taken. Provide an information copy of tests performed by an offsite or commercial test facility directly to the Contracting Officer. Failure to submit timely test reports as stated may result in nonpayment for related work performed and disapproval of the test facility for this contract.

3.7.2 Testing Laboratories

The listing of validated testing laboratories is available at http://gsl.erdc.usace.army.mil/SL/MTC/.

3.7.2.1 Capability Check

The Government reserves the right to check laboratory equipment in the proposed laboratory for compliance with the standards set forth in the contract specifications and to check the laboratory technician's testing procedures and techniques. Laboratories utilized for testing soils, concrete, asphalt, and steel must meet criteria detailed in ASTM D3740 and ASTM E329.

3.7.2.2 Capability Recheck

If the selected laboratory fails the capability check, the Contractor will be assessed a charge of $750 to reimburse the Government for each succeeding recheck of the laboratory or the checking of a subsequently selected laboratory. Such costs will be deducted from the contract amount due the Contractor.

3.7.3 Onsite Laboratory

The Government reserves the right to utilize the Contractor's control testing laboratory and equipment to make assurance tests, and to check the Contractor's testing procedures, techniques, and test results at no additional cost to the Government.

3.8 COMPLETION INSPECTION

3.8.1 Punch-Out Inspection

Conduct an inspection of the work by the CQC Manager near the end of the

CONFORMED

work, or any increment of the work established by a time stated in the SPECIAL CONTRACT REQUIREMENTS Clause, "Commencement, Prosecution, and Completion of Work", or by the specifications. Prepare and include in the CQC documentation a punch list of items which do not conform to the approved drawings and specifications, as required by paragraph DOCUMENTATION. Include within the list of deficiencies the estimated date by which the deficiencies will be corrected. Make a second inspection the CQC System Manager or staff to ascertain that all deficiencies have been corrected. Once this is accomplished, notify the Government that the facility is ready for the Government Pre-Final inspection.

3.8.2 Pre-Final Inspection

The Government will perform the pre-final inspection to verify that the facility is complete and ready to be occupied. A Government Pre-Final Punch List may be developed as a result of this inspection. Ensure that all items on this list have been corrected before notifying the Government, so that a Final inspection with the customer can be scheduled. Correct any items noted on the Pre-Final inspection in a timely manner. These inspections and any deficiency corrections required by this paragraph must be accomplished within the time slated for completion of the entire work or any particular increment of the work if the project is divided into increments by separate completion dates.

3.8.3 Final Acceptance Inspection

The Contractor's Quality Control Inspection personnel, plus the superintendent or other primary management person, and the Contracting Officer's Representative must be in attendance at the final acceptance inspection. Additional Government personnel including, but not limited to, those from Base/Post Civil Facility Engineer user groups, and major commands may also be in attendance. The final acceptance inspection will be formally scheduled by the Contracting Officer based upon results of the Pre-Final inspection. Notify the Contracting Officer at least 14 days prior to the final acceptance inspection and include the Contractor's assurance that all specific items previously identified to the Contractor as being unacceptable, along with all remaining work performed under the contract, will be complete and acceptable by the date scheduled for the final acceptance inspection. Failure of the Contractor to have all contract work acceptably complete for this inspection will be cause for the Contracting Officer to bill the Contractor for the Government's additional inspection cost in accordance with the contract clause titled "Inspection of Construction".

3.9 DOCUMENTATION

Maintain current records providing factual evidence that required quality control activities and/or tests have been performed. Include in these records the work of subcontractors and suppliers on an acceptable form that includes, as a minimum, the following information:

a. Contractor/subcontractor and their area of responsibility.

b. Operating plant/equipment with hours worked, idle, or down for repair.

c. Work performed each day, giving location, description, and by whom. When Network Analysis (NAS) is used, identify each phase of work performed each day by NAS activity number.

CONFORMED

d. Test and/or control activities performed with results and references to specifications/drawings requirements. Identify the control phase (Preparatory, Initial, Follow-up). List of deficiencies noted, along with corrective action.

e. Quantity of materials received at the site with statement as to acceptability, storage, and reference to specifications/drawings requirements.

f. Submittals and deliverables reviewed, with contract reference, by whom, and action taken.

g. Offsite surveillance activities, including actions taken.

h. Job safety evaluations stating what was checked, results, and instructions or corrective actions.

i. Instructions given/received and conflicts in plans and/or specifications.

k. Contractor's verification statement.

Indicate a description of trades working on the project; the number of personnel working; weather conditions encountered; and any delays encountered. Cover both conforming and deficient features and include a statement that equipment and materials incorporated in the work and workmanship comply with the contract. Furnish the original and one copy of these records in report form to the Government daily within 24 hours after the date covered by the report, except that reports need not be submitted for days on which no work is performed. As a minimum, prepare and submit one report for every 7 days of no work and on the last day of a no work period. All calendar days must be accounted for throughout the life of the contract. The first report following a day of no work will be for that day only. Reports must be signed and dated by the CQC System Manager. Include copies of test reports and copies of reports prepared by all subordinate quality control personnel within the CQC System Manager Report.

3.10 SAMPLE FORMS

Sample forms enclosed at the end of this section.

3.11 NOTIFICATION OF NONCOMPLIANCE

The Contracting Officer will notify the Contractor of any detected noncompliance with the foregoing requirements. Take immediate corrective action after receipt of such notice. Such notice, when delivered to the Contractor at the work site, will be deemed sufficient for the purpose of notification. If the Contractor fails or refuses to comply promptly, the Contracting Officer may issue an order stopping all or part of the work until satisfactory corrective action has been taken. No part of the time lost due to such stop orders will be made the subject of claim for extension of time or for excess costs or damages by the Contractor.

-- End of Section --

CONFORMED

SECTION TABLE OF CONTENTS

DIVISION 01 - GENERAL REQUIREMENTS

SECTION 01 45 00.10 10

QUALITY CONTROL SYSTEM (QCS)

02/10

PART 1 GENERAL

1.1 Contract Administration
1.1.1 Correspondence and Electronic Communications
1.1.2 Other Factors
1.2 QCS SOFTWARE
1.3 SYSTEM REQUIREMENTS
1.4 RELATED INFORMATION
1.4.1 QCS User Guide
1.4.2 Contractor Quality Control (CQC) Training
1.5 CONTRACT DATABASE
1.6 DATABASE MAINTENANCE
1.6.1 Administration
1.6.1.1 Contractor Information
1.6.1.2 Subcontractor Information
1.6.1.3 Correspondence
1.6.1.4 Equipment
1.6.1.5 Management Reporting
1.6.1.6 Request For Information (RFI)
1.6.2 Finances
1.6.2.1 Pay Activity Data
1.6.2.2 Payment Requests
1.6.3 Quality Control (QC)
1.6.3.1 Daily Contractor Quality Control (CQC) Reports.
1.6.3.2 Deficiency Tracking.
1.6.3.3 QC Requirements
1.6.3.4 Three-Phase Control Meetings
1.6.3.5 Labor and Equipment Hours
1.6.3.6 Accident/Safety Reporting
1.6.3.7 Features of Work
1.6.3.8 Hazard Analysis
1.6.4 Submittal Management
1.6.5 Schedule
1.6.6 Import/Export of Data
1.7 IMPLEMENTATION
1.8 DATA SUBMISSION VIA OPTICAL DISK
1.8.1 File Medium
1.8.2 Optical Disk Labels
1.8.3 File Names
1.9 MONTHLY COORDINATION MEETING
1.10 NOTIFICATION OF NONCOMPLIANCE

PART 2 PRODUCTS

PART 3 EXECUTION

CONFORMED

-- End of Section Table of Contents --

CONFORMED

SECTION 01 45 00.10 10

QUALITY CONTROL SYSTEM (QCS)
02/10

PART 1 GENERAL

1.1 Contract Administration

The Government will use the Resident Management System for Windows (RMS) to assist in its monitoring and administration of this contract. The Contractor must use the Government-furnished Construction Contractor Module of RMS, referred to as QCS, to record, maintain, and submit various information throughout the contract period. The Contractor module, user manuals, updates, and training information can be downloaded from the RMS web site (http://rms.usace.army.mil). This joint Government-Contractor use of RMS and QCS will facilitate electronic exchange of information and overall management of the contract. QCS provides the means for the Contractor to input, track, and electronically share information with the Government in the following areas:

Administration
Finances
Quality Control
Submittal Monitoring
Scheduling
Import/Export of Data

1.1.1 Correspondence and Electronic Communications

For ease and speed of communications, both Government and Contractor will, to the maximum extent feasible, exchange correspondence and other documents in electronic format. Correspondence, pay requests and other documents comprising the official contract record will also be provided in paper format, with signatures and dates where necessary. Paper documents will govern, in the event of discrepancy with the electronic version.

1.1.2 Other Factors

Particular attention is directed to Contract Clause, "Schedules for Construction Contracts", Contract Clause, "Payments", Section 01 32 01.00 10 PROJECT SCHEDULE, Section 01 33 00 SUBMITTAL PROCEDURES, and Section 01 45 00.00 10 QUALITY CONTROL, which have a direct relationship to the reporting to be accomplished through QCS. Also, there is no separate payment for establishing and maintaining the QCS database; all costs associated therewith will be included in the contract pricing for the work.

1.2 QCS SOFTWARE

QCS is a Windows-based program that can be run on a stand-alone personal computer or on a network. The Government will make available the QCS software to the Contractor after award of the construction contract. Prior to the Pre-Construction Conference, the Contractor will be responsible to download, install and use the latest version of the QCS software from the Government's RMS Internet Website. Upon specific justification and request by the Contractor, the Government can provide QCS on optical disk. Any

CONFORMED

program updates of QCS will be made available to the Contractor via the Government RMS Website as they become available.

1.3 SYSTEM REQUIREMENTS

The following is the minimum system configuration required to run QCS:

Minimum QCS System Requirements	
Hardware	
Windows-based PC	1000 MHz Pentium or higher processor
RAM	256+ MB for workstation / 512+ MB for server
Hard drive disk	1 GB space for sole use by the QCS system
Optical Disk (CD or DVD) Reader	8x speed or higher
Monitor	SVGA or higher resolution (1024x768, 256 colors)
Mouse or other pointing device	
Windows compatible printer	Laser printer must have 4 MB+ of RAM
Connection to the Internet	minimum 56k BPS
Software	
MS Windows	2000, XP, Vista or Windows 7
Word Processing software	MS Word 2000 or newer
Internet browser	Microsoft Internet Explorer, or other browser that supports HTML 4.0 or higher
Email	MAPI compatible
Virus protection software	regularly upgraded with all issued manufacturer's updates

1.4 RELATED INFORMATION

1.4.1 QCS User Guide

After contract award, download instructions for the installation and use of QCS from the Government RMS Internet Website. In case of justifiable difficulties, the Government will provide an optical disk (CD/DVD) containing these instructions.

1.4.2 Contractor Quality Control (CQC) Training

The use of QCS will be discussed with the QC System Manager during the mandatory CQC Training class.

CONFORMED

1.5 CONTRACT DATABASE

Prior to the pre-construction conference, the Government will provide the Contractor with basic contract award data to use for QCS. The Government will provide data updates to the Contractor as needed, generally by using the Government's SFTP repository built into QCS import/export function. These updates will generally consist of submittal reviews, correspondence status, QA comments, and other administrative and QA data.

1.6 DATABASE MAINTENANCE

Establish, maintain, and update data in the QCS database throughout the duration of the contract at the Contractor's site office. Submit data updates to the Government (e.g., daily reports, submittals, RFI's, schedule updates, payment requests, etc.) using the Government's SFTP repository built into QCS export function. If permitted by the Contracting Officer, email or optical disk may be used instead of QCS (see Paragraph DATA SUBMISSION VIA OPTICAL DISK). The QCS database typically includes current data on the following items:

1.6.1 Administration

1.6.1.1 Contractor Information

Contain within the database the Contractor's name, address, telephone numbers, management staff, and other required items. Within 14 calendar days of receipt of QCS software from the Government, deliver Contractor administrative data in electronic format.

1.6.1.2 Subcontractor Information

Contain within the database the name, trade, address, phone numbers, and other required information for all subcontractors. A subcontractor must be listed separately for each trade to be performed. Assign each subcontractor/trade a unique Responsibility Code, provided in QCS. Within 14 calendar days of receipt of QCS software from the Government, deliver subcontractor administrative data in electronic format.

1.6.1.3 Correspondence

Identify all Contractor correspondence to the Government with a serial number. Prefix correspondence initiated by the Contractor's site office with "S". Prefix letters initiated by the Contractor's home (main) office with "H". Letters must be numbered starting from 0001. (e.g., H-0001 or S-0001). The Government's letters to the Contractor will be prefixed with "C".

1.6.1.4 Equipment

Contain within the Contractor's QCS database a current list of equipment planned for use or being used on the jobsite, including the most recent and planned equipment inspection dates.

1.6.1.5 Management Reporting

QCS includes a number of reports that Contractor management can use to track the status of the project. The value of these reports is reflective of the quality of the data input, and is maintained in the various sections of QCS. Among these reports are: Progress Payment Request worksheet,

CONFORMED

QA/QC comments, Submittal Register Status, Three-Phase Control checklists.

1.6.1.6 Request For Information (RFI)

Exchange all Requests For Information (RFI) using the Built-in RFI generator and tracker in QCS.

1.6.2 Finances

1.6.2.1 Pay Activity Data

Include within the QCS database a list of pay activities that the Contractor must develop in conjunction with the construction schedule. The sum of all pay activities must be equal to the total contract amount, including modifications. Group pay activities Contract Line Item Number (CLIN); the sum of the activities must equal the amount of each CLIN. The total of all CLINs equals the Contract Amount.

1.6.2.2 Payment Requests

Prepare all progress payment requests using QCS. Complete the payment request worksheet, prompt payment certification, and payment invoice in QCS. Update the work completed under the contract, measured as percent or as specific quantities, at least monthly. After the update, generate a payment request report using QCS. Submit the payment request, prompt payment certification, and payment invoice with supporting data using the Government's SFTP repository built into QCS export function. If permitted by the Contracting Officer, email or an optical disk may be used. A signed paper copy of the approved payment request is also required, which will govern in the event of discrepancy with the electronic version.

1.6.3 Quality Control (QC)

QCS provides a means to track implementation of the 3-phase QC Control System, prepare daily reports, identify and track deficiencies, document progress of work, and support other Contractor QC requirements. Maintain this data on a daily basis. Entered data will automatically output to the QCS generated daily report. Provide the Government a Contractor Quality Control (CQC) Plan within the time required in Section 01 45 00.00 10 QUALITY CONTROL. Within seven calendar days of Government acceptance, submit a QCS update reflecting the information contained in the accepted CQC Plan: schedule, pay activities, features of work, submittal register, QC requirements, and equipment list.

1.6.3.1 Daily Contractor Quality Control (CQC) Reports.

QCS includes the means to produce the Daily CQC Report. The Contractor may use other formats to record basic QC data. However, the Daily CQC Report generated by QCS must be the Contractor's official report. Summarize data from any supplemental reports by the Contractor and consolidate onto the QCS-generated Daily CQC Report. Submit daily CQC Reports as required by Section 01 45 00.00 10 QUALITY CONTROL. Electronically submit reports to the Government within 24 hours after the date covered by the report. Also provide the Government a signed, printed copy of the daily CQC report.

1.6.3.2 Deficiency Tracking.

Use QCS to track deficiencies. Deficiencies identified by the Contractor will be numerically tracked using QC punch list items. Maintain a current

CONFORMED

log of its QC punch list items in the QCS database. The Government will log the deficiencies it has identified using its QA punch list items. The Government's QA punch list items will be included in its export file to the Contractor. Regularly update the correction status of both QC and QA punch list items.

1.6.3.3 QC Requirements

Develop and maintain a complete list of QC testing and required structural and life safety special inspections required by the International Code Council (ICC), transferred and installed property, and user training requirements in QCS. Update all data on these QC requirements as work progresses, and promptly provide this information to the Government via QCS.

1.6.3.4 Three-Phase Control Meetings

Maintain scheduled and actual dates and times of preparatory and initial control meetings in QCS.

1.6.3.5 Labor and Equipment Hours

Log labor and equipment exposure hours on a daily basis. This data will be rolled up into a monthly exposure report.

1.6.3.6 Accident/Safety Reporting

The Government will issue safety comments, directions, or guidance whenever safety deficiencies are observed. The Government's safety comments will be included in its export file to the Contractor. Regularly update the correction status of the safety comments. In addition, utilize QCS to advise the Government of any accidents occurring on the jobsite. This brief supplemental entry is not to be considered as a substitute for completion of mandatory reports, e.g., ENG Form 3394 and OSHA Form 300.

1.6.3.7 Features of Work

Include a complete list of the features of work in the QCS database. A feature of work may be associated with multiple pay activities. However, each pay activity (see subparagraph "Pay Activity Data" of paragraph "Finances") will only be linked to a single feature of work.

1.6.3.8 Hazard Analysis

Use QCS to develop a hazard analysis for each feature of work included in the CQC Plan. Address any hazards, or potential hazards, that may be associated with the work.

1.6.4 Submittal Management

The Government will provide the initial submittal register in electronic format. Thereafter, maintain a complete list of all submittals, including completion of all data columns. Dates on which submittals are received and returned by the Government will be included in its export file to the Contractor. Use QCS to track and transmit all submittals. ENG Form 4025, submittal transmittal form, and the submittal register update must be produced using QCS. QCS and RMS will be used to update, store and exchange submittal registers and transmittals, but will not be used for storage of actual submittals.

CONFORMED

1.6.5 Schedule

Develop a construction schedule consisting of pay activities, in accordance with Section 01 32 01.00 10 PROJECT SCHEDULE. Input and maintain in the QCS database this schedule either manually or by using the Standard Data Exchange Format (SDEF) (see Section 01 32 01.00 10 PROJECT SCHEDULE). Include with each pay request the updated schedule.

1.6.6 Import/Export of Data

QCS includes the ability to export Contractor data to the Government and to import submittal register and other Government-provided data from RMS, and schedule data using SDEF.

1.7 IMPLEMENTATION

Contractor use of QCS as described in the preceding paragraphs is mandatory. Ensure that sufficient resources are available to maintain its QCS database, and to provide the Government with regular database updates. QCS shall be an integral part of the Contractor's management of quality control.

1.8 DATA SUBMISSION VIA OPTICAL DISK

The Government-preferred method for Contractor's submission of QCS data is by using the Government's SFTP repository built into QCS export function. Other data should be submitted using email with file attachment(s). For locations where this is not feasible, the Contracting Officer may permit use of optical disk for data transfer. Export data onto optical disks using the QCS built-in export function. If used, submit optical disks in accordance with the following:

1.8.1 File Medium

Submit in English required data on optical disk conforming to industry standards used in the United States.

1.8.2 Optical Disk Labels

Affix a permanent exterior label to each optical disk submitted. Indicate on the label in English, the QCS file name, full contract number, contract name, project location, data date, name and telephone number of person responsible for the data.

1.8.3 File Names

The files will be automatically named by the QCS software. The naming convention established by the QCS software must not be altered.

1.9 MONTHLY COORDINATION MEETING

Update the QCS database each workday. At least monthly, generate and submit an export file to the Government with schedule update and progress payment request. As required in Contract Clause "Payments", at least one week prior to submittal, meet with the Government representative to review the planned progress payment data submission for errors and omissions.

Make all required corrections prior to Government acceptance of the export file and progress payment request. Payment requests accompanied by

CONFORMED

incomplete or incorrect data submittals will be returned. The Government will not process progress payments until an acceptable QCS export file is received.

1.10 NOTIFICATION OF NONCOMPLIANCE

The Contracting Officer will notify the Contractor of any detected noncompliance with the requirements of this specification. Take immediate corrective action after receipt of such notice. Such notice, when delivered to the Contractor at the work site, will be deemed sufficient for the purpose of notification.

PART 2 PRODUCTS

Not Used

PART 3 EXECUTION

Not Used

-- End of Section --

CONFORMED

SECTION TABLE OF CONTENTS

DIVISION 01 - GENERAL REQUIREMENTS

SECTION 01 50 00

TEMPORARY CONSTRUCTION FACILITIES AND CONTROLS

08/09

PART 1 GENERAL

1.1 REFERENCES
1.2 SUBMITTALS
1.3 CONSTRUCTION SITE PLAN

PART 2 PRODUCTS

2.1 TEMPORARY SIGNAGE
2.1.1 Bulletin Board
2.1.2 Project and Safety Signs
2.2 TEMPORARY TRAFFIC CONTROL
2.2.1 Haul Roads
2.2.2 Barricades
2.2.3 Fencing
2.2.4 Temporary Wiring

PART 3 EXECUTION

3.1 EMPLOYEE PARKING
3.2 TEMPORARY BULLETIN BOARD
3.3 AVAILABILITY AND USE OF UTILITY SERVICES
3.3.1 Temporary Utilities
3.3.2 Sanitation
3.3.3 Telephone
3.3.4 Fire Protection
3.4 TRAFFIC PROVISIONS
3.4.1 Maintenance of Traffic
3.4.2 Protection of Traffic
3.4.3 Dust Control
3.5 CONTRACTOR'S TEMPORARY FACILITIES
3.5.1 Safety
3.5.2 Administrative Field Offices
3.5.3 Storage Area
3.5.4 Supplemental Storage Area
3.5.5 Appearance of Trailers
3.5.6 Maintenance of Storage Area
3.5.7 New Building
3.5.8 Security Provisions
3.5.9 Weather Protection of Temporary Facilities and Stored Materials
3.5.9.1 Building and Site Storm Protection
3.6 GOVERNMENT FIELD OFFICE
3.6.1 Resident Engineer's Office
3.6.2 Trailer-Type Mobile Office
3.7 PLANT COMMUNICATION
3.8 TEMPORARY PROJECT SAFETY FENCING

CONFORMED

3.9 CLEANUP
3.10 RESTORATION OF STORAGE AREA

-- End of Section Table of Contents --

CONFORMED

SECTION 01 50 00

TEMPORARY CONSTRUCTION FACILITIES AND CONTROLS
08/09

PART 1 GENERAL

1.1 REFERENCES

The publications listed below form a part of this specification to the extent referenced. The publications are referred to within the text by the basic designation only.

NATIONAL FIRE PROTECTION ASSOCIATION (NFPA)

NFPA 241	(2013; Errata 2015) Standard for Safeguarding Construction, Alteration, and Demolition Operations
NFPA 70	(2014; AMD 1 2013; Errata 1 2013; AMD 2 2013; Errata 2 2013; AMD 3 2014; Errata 3-4 2014; AMD 4-6 2014) National Electrical Code

U.S. FEDERAL HIGHWAY ADMINISTRATION (FHWA)

MUTCD	(2009) Manual on Uniform Traffic Control Devices

1.2 SUBMITTALS

Government approval is required for submittals with a "G" designation; submittals not having a "G" designation are for information only. When used, a designation following the "G" designation identifies the office that will review the submittal for the Government. Submit the following in accordance with Section 01 33 00 SUBMITTAL PROCEDURES:

SD-01 Preconstruction Submittals

Construction Site Plan; G
Traffic Control Plan; G

1.3 CONSTRUCTION SITE PLAN

Prior to the start of work, submit a site plan showing the locations and dimensions of temporary facilities (including layouts and details, equipment and material storage area (onsite and offsite), and access and haul routes, avenues of ingress/egress to the fenced area and details of the fence installation. Identify any areas which may have to be graveled to prevent the tracking of mud. Indicate if the use of a supplemental or other staging area is desired. Show locations of safety and construction fences, site trailers, construction entrances, trash dumpsters, temporary sanitary facilities, and worker parking areas.

CONFORMED

PART 2 PRODUCTS

2.1 TEMPORARY SIGNAGE

2.1.1 Bulletin Board

Immediately upon beginning of work, provide a weatherproof glass-covered bulletin board not less than 36 by 48 inches in size for displaying the Equal Employment Opportunity poster, a copy of the wage decision contained in the contract, Wage Rate Information poster, and other information approved by the Contracting Officer.

2.1.2 Project and Safety Signs

The requirements for the signs, their content, and location are as specified in Section 01 58 00 PROJECT IDENTIFICATION. Erect signs within 15 days after receipt of the notice to proceed. Correct the data required by the safety sign daily, with light colored metallic or non-metallic numerals.

2.2 TEMPORARY TRAFFIC CONTROL

2.2.1 Haul Roads

Construct access and haul roads necessary for proper prosecution of the work under this contract. Construct with suitable grades and widths; sharp curves, blind corners, and dangerous cross traffic are be avoided. Provide necessary lighting, signs, barricades, and distinctive markings for the safe movement of traffic. The method of dust control, although optional, must be adequate to ensure safe operation at all times. Location, grade, width, and alignment of construction and hauling roads are subject to approval by the Contracting Officer. Lighting must be adequate to assure full and clear visibility for full width of haul road and work areas during any night work operations.

2.2.2 Barricades

Erect and maintain temporary barricades to limit public access to hazardous areas. Whenever safe public access to paved areas such as roads, parking areas or sidewalks is prevented by construction activities or as otherwise necessary to ensure the safety of both pedestrian and vehicular traffic barricades will be required. Securely place barricades clearly visible with adequate illumination to provide sufficient visual warning of the hazard during both day and night.

2.2.3 Fencing

Provide fencing along the construction site at all open excavations and tunnels to control access by unauthorized people.

a. The safety fencing must be a high visibility orange colored, high density polyethylene grid or approved equal, a minimum of 48 inches high and maximum mesh size of 2 inches, supported and tightly secured to steel posts located on maximum 10 foot centers, constructed at the approved location. Install fencing to be able to restrain a force of at least 250 pounds against it.

2.2.4 Temporary Wiring

Provide temporary wiring in accordance with NFPA 241 and NFPA 70. Include

CONFORMED

frequent inspection of all equipment and apparatus.

PART 3 EXECUTION

3.1 EMPLOYEE PARKING

Contractor employees will park privately owned vehicles in an area designated by the Contracting Officer. This area will be within reasonable walking distance of the construction site. Contractor employee parking must not interfere with existing and established parking requirements of the government installation.

3.2 TEMPORARY BULLETIN BOARD

Locate the bulletin board at the project site in a conspicuous place easily accessible to all employees, as approved by the Contracting Officer.

3.3 AVAILABILITY AND USE OF UTILITY SERVICES

3.3.1 Temporary Utilities

Provide temporary utilities required for construction. Materials may be new or used, must be adequate for the required usage, not create unsafe conditions, and not violate applicable codes and standards.

3.3.2 Sanitation

a. Provide and maintain within the construction area minimum field-type sanitary facilities approved by the Contracting Officer and periodically empty wastes into a municipal, district, or station sanitary sewage system, or remove waste to a commercial facility. Obtain approval from the system owner prior to discharge into any municipal, district, or commercial sanitary sewer system. Any penalties and / or fines associated with improper discharge will be the responsibility of the Contractor. Coordinate with the Contracting Officer and follow station regulations and procedures when discharging into the station sanitary sewer system. Maintain these conveniences at all times without nuisance. Include provisions for pest control and elimination of odors. Government toilet facilities will not be available to Contractor's personnel.

3.3.3 Telephone

Make arrangements and pay all costs for telephone facilities desired.

3.3.4 Fire Protection

Provide temporary fire protection equipment for the protection of personnel and property during construction. Remove debris and flammable materials weekly to minimize potential hazards.

3.4 TRAFFIC PROVISIONS

3.4.1 Maintenance of Traffic

a. Conduct operations in a manner that will not close any thoroughfare or interfere in any way with traffic on railways or highways except with written permission of the Contracting Officer at least 15 calendar days prior to the proposed modification date, and provide a Traffic Control

CONFORMED

Plan detailing the proposed controls to traffic movement for approval. The plan must be in accordance with State and local regulations and the MUTCD, Part VI. Contractor may move oversized and slow-moving vehicles to the worksite provided requirements of the highway authority have been met.

b. Conduct work so as to minimize obstruction of traffic, and maintain traffic on at least half of the roadway width at all times. Obtain approval from the Contracting Officer prior to starting any activity that will obstruct traffic.

c. Provide, erect, and maintain, at contractors expense, lights, barriers, signals, passageways, detours, and other items, that may be required by the Life Safety Signage, overhead protection authority having jurisdiction.

3.4.2 Protection of Traffic

Maintain and protect traffic on all affected roads during the construction period except as otherwise specifically directed by the Contracting Officer. Measures for the protection and diversion of traffic, including the provision of watchmen and flagmen, erection of barricades, placing of lights around and in front of equipment the work, and the erection and maintenance of adequate warning, danger, and direction signs, will be as required by the State and local authorities having jurisdiction. Protect the traveling public from damage to person and property. Minimize the interference with public traffic on roads selected for hauling material to and from the site. Investigate the adequacy of existing roads and their allowable load limit. Contractor is responsible for the repair of any damage to roads caused by construction operations.

3.4.3 Dust Control

Dust control methods and procedures must be approved by the Contracting Officer. Treat dust abatement on access roads with applications of calcium chloride, water sprinklers, or similar methods or treatment.

3.5 CONTRACTOR'S TEMPORARY FACILITIES

3.5.1 Safety

Protect the integrity of any installed safety systems or personnel safety devices. If entrance into systems serving safety devices is required, the Contractor must obtain prior approval from the Contracting Officer. If it is temporarily necessary to remove or disable personnel safety devices in order to accomplish contract requirements, provide alternative means of protection prior to removing or disabling any permanently installed safety devices or equipment and obtain approval from the Contracting Officer.

3.5.2 Administrative Field Offices

Provide and maintain administrative field office facilities within the construction area at the designated site. Government office and warehouse facilities will not be available to the Contractor's personnel.

3.5.3 Storage Area

Construct a temporary 6 foot high chain link fence around trailers and materials. Fence posts may be driven, in lieu of concrete bases, where

CONFORMED

soil conditions permit. Do not place or store Trailers, materials, or equipment outside the fenced area unless such trailers, materials, or equipment are assigned a separate and distinct storage area by the Contracting Officer away from the vicinity of the construction site but within the installation boundaries. Trailers, equipment, or materials must not be open to public view with the exception of those items which are in support of ongoing work on any given day. Do not stockpile materials outside the fence in preparation for the next day's work. Park mobile equipment, such as tractors, wheeled lifting equipment, cranes, trucks, and like equipment within the fenced area at the end of each work day.

3.5.4 Supplemental Storage Area

Upon Contractor's request, the Contracting Officer will designate another or supplemental area for the Contractor's use and storage of trailers, equipment, and materials. This area may not be in close proximity of the construction site but will be within the installation boundaries. Fencing of materials or equipment will not be required at this site; however, the Contractor is responsible for cleanliness and orderliness of the area used and for the security of any material or equipment stored in this area. Utilities will not be provided to this area by the Government.

3.5.5 Appearance of Trailers

a. Trailers utilized by the Contractor for administrative or material storage purposes must present a clean and neat exterior appearance and be in a state of good repair. Trailers which, in the opinion of the Contracting Officer, require exterior painting or maintenance will not be allowed on installation property.

b. Paint using suitable paint and maintain the temporary facilities. Failure to do so will be sufficient reason to require their removal.

3.5.6 Maintenance of Storage Area

a. Keep fencing in a state of good repair and proper alignment. Grassed or unpaved areas, which are not established roadways, will be covered with a layer of gravel as necessary to prevent rutting and the tracking of mud onto paved or established roadways, should the Contractor elect to traverse them with construction equipment or other vehicles; gravel gradation will be at the Contractor's discretion. Mow and maintain grass located within the boundaries of the construction site for the duration of the project. Grass and vegetation along fences, buildings, under trailers, and in areas not accessible to mowers will be edged or trimmed neatly.

3.5.7 New Building

In the event a new building is constructed for the temporary project field office, it will be a minimum 12 feet in width, 16 feet in length and have a minimum of 7 feet headroom. Equip the building with approved electrical wiring, at least one double convenience outlet and the required switches and fuses to provide 110-120 volt power. Provide a work table with stool, desk with chair, two additional chairs, and one legal size file cabinet that can be locked. The building must be waterproof, supplied with a heater, have a minimum of two doors, electric lights, a telephone, a battery operated smoke detector alarm, a sufficient number of adjustable windows for adequate light and ventilation, and a supply of approved drinking water. Approved sanitary facilities must be furnished. Screen

CONFORMED

the windows and doors and provide the doors with dead bolt type locking devices or a padlock and heavy duty hasp bolted to the door. Door hinge pins will be non-removable. Arrange the windows to open and to be securely fastened from the inside. Protect glass panels in windows by bars or heavy mesh screens to prevent easy access. In warm weather, furnish air conditioning capable of maintaining the office at 50 percent relative humidity and a room temperature 20 degrees F below the outside temperature when the outside temperature is 95 degrees F. Any new building erected for a temporary field office must be maintained by the Contractor during the life of the contract and upon completion and acceptance of the work become the property of the Contractor and removed from the site.

3.5.8 Security Provisions

Provide adequate outside security lighting at the Contractor's temporary facilities. The Contractor will be responsible for the security of its own equipment; in addition, the Contractor will notify the appropriate law enforcement agency requesting periodic security checks of the temporary project field office.

3.5.9 Weather Protection of Temporary Facilities and Stored Materials

Take necessary precautions to ensure that roof openings and other critical openings in the building are monitored carefully. Take immediate actions required to seal off such openings when rain or other detrimental weather is imminent, and at the end of each workday. Ensure that the openings are completely sealed off to protect materials and equipment in the building from damage.

3.5.9.1 Building and Site Storm Protection

When a warning of gale force winds is issued, take precautions to minimize danger to persons, and protect the work and nearby Government property. Precautions must include, but are not limited to, closing openings; removing loose materials, tools and equipment from exposed locations; and removing or securing scaffolding and other temporary work. Close openings in the work when storms of lesser intensity pose a threat to the work or any nearby Government property.

3.6 GOVERNMENT FIELD OFFICE

3.6.1 Resident Engineer's Office

Provide the Government Resident Engineer with an office, approximately 500 square feet in floor area, located where directed and providing space heat, electric light and power, and toilet facilities consisting of one lavatory and one water closet complete with connections to water and sewer mains. Provide a mail slot in the door or a lockable mail box mounted on the surface of the door. Include a conference table and chairs to accommodate 8 people and a 4 by 8 foot plan table, computer work space, two standard size office desks and two chairs, and telephone. Contractor shall provide a broadband Internet service to Government Field Office. Government Field Office shall not be located in "shared space" with Contractor personnel. At completion of the project, the office will remain the property of the Contractor and be removed from the site. Utilities will be connected and disconnected in accordance with local codes and to the satisfaction of the Contracting Officer.

CONFORMED

3.6.2 Trailer-Type Mobile Office

The Contractor may, at its option, furnish and maintain a trailer-type mobile office acceptable to the Contracting Officer and providing as a minimum the facilities specified above. Securely anchor the trailer to the ground at all four corners to guard against movement during high winds.

3.7 PLANT COMMUNICATION

Whenever the Contractor has the individual elements of its plant so located that operation by normal voice between these elements is not satisfactory, the Contractor must install a satisfactory means of communication, such as telephone or other suitable devices and made available for use by Government personnel.

3.8 TEMPORARY PROJECT SAFETY FENCING

As soon as practicable, but not later than 15 days after the date established for commencement of work, furnish and erect temporary project safety fencing at the work site. Maintain the safety fencing during the life of the contract and, upon completion and acceptance of the work, will become the property of the Contractor and be removed from the work site.

3.9 CLEANUP

Remove construction debris, waste materials, packaging material and the like from the work site daily. Any dirt or mud which is tracked onto paved or surfaced roadways must be cleaned away. Store any salvageable materials resulting from demolition activities within the fenced area described above or at the supplemental storage area. Neatly stack stored materials not in trailers, whether new or salvaged.

3.10 RESTORATION OF STORAGE AREA

Upon completion of the project remove the bulletin board, signs, barricades, haul roads, and any other temporary products from the site. After removal of trailers, materials, and equipment from within the fenced area, remove the fence that will become the property of the Contractor. Restore areas used by the Contractor for the storage of equipment or material, or other use to the original or better condition. Remove gravel used to traverse grassed areas and restore the area to its original condition, including top soil and seeding as necessary.

-- End of Section --

CONFORMED

SECTION TABLE OF CONTENTS

DIVISION 01 - GENERAL REQUIREMENTS

SECTION 01 57 19

TEMPORARY ENVIRONMENTAL CONTROLS

11/15

PART 1 GENERAL

1.1 REFERENCES
1.2 DEFINITIONS
1.2.1 Class I and II Ozone Depleting Substance (ODS)
1.2.2 Contractor Generated Hazardous Waste
1.2.3 Electronics Waste
1.2.4 Environmental Pollution and Damage
1.2.5 Environmental Protection
1.2.6 Hazardous Debris
1.2.7 Hazardous Materials
1.2.8 Hazardous Waste
1.2.9 Land Application
1.2.10 Municipal Separate Storm Sewer System (MS4) Permit
1.2.11 National Pollutant Discharge Elimination System (NPDES)
1.2.12 Oily Waste
1.2.13 Regulated Waste
1.2.14 Sediment
1.2.15 Solid Waste
1.2.15.1 Debris
1.2.15.2 Green Waste
1.2.15.3 Material not regulated as solid waste
1.2.15.4 Non-Hazardous Waste
1.2.15.5 Recyclables
1.2.15.6 Surplus Soil
1.2.15.7 Scrap Metal
1.2.15.8 Wood
1.2.16 Surface Discharge
1.2.17 Wastewater
1.2.17.1 Stormwater
1.2.18 Waters of the United States
1.2.19 Wetlands
1.2.20 Universal Waste
1.3 SUBMITTALS
1.4 ENVIRONMENTAL PROTECTION REQUIREMENTS
1.5 QUALITY ASSURANCE
1.5.1 Preconstruction Survey and Protection of Features
1.5.2 Regulatory Notifications
1.5.3 Environmental Brief
1.5.4 Employee Training Records
1.5.5 Non-Compliance Notifications
1.6 ENVIRONMENTAL PROTECTION PLAN
1.6.1 General Overview and Purpose
1.6.1.1 Descriptions
1.6.1.2 Duties
1.6.1.3 Procedures

CONFORMED

1.6.1.4 Communications
1.6.1.5 Contact Information
1.6.2 General Site Information
1.6.2.1 Drawings
1.6.2.2 Work Area
1.6.2.3 Documentation
1.6.3 Management of Natural Resources
1.6.4 Protection of Historical and Archaeological Resources
1.6.5 Stormwater Management and Control
1.6.6 Protection of the Environment from Waste Derived from Contractor Operations
1.6.7 Prevention of Releases to the Environment
1.6.8 Regulatory Notification and Permits
1.6.9 Clean Air Act Compliance
1.6.9.1 Haul Route
1.6.9.2 Pollution Generating Equipment
1.6.9.3 Stationary Internal Combustion Engines
1.6.9.4 Refrigerants
1.6.9.5 Air Pollution-engineering Processes
1.6.9.6 Ground Disturbing
1.6.9.7 Compliant Materials
1.7 LICENSES AND PERMITS
1.8 ENVIRONMENTAL RECORDS BINDER
1.9 SOLID WASTE MANAGEMENT PERMIT
1.9.1 Solid Waste Management Report

PART 2 PRODUCTS

PART 3 EXECUTION

3.1 PROTECTION OF NATURAL RESOURCES
3.1.1 Flow Ways
3.1.2 Vegetation
3.1.3 Streams
3.2 STORMWATER
3.2.1 Construction General Permit
3.2.1.1 Stormwater Pollution Prevention Plan
3.2.1.2 Stormwater Notice of Intent for Construction Activities
3.2.1.3 Inspection Reports
3.2.1.4 Stormwater Pollution Prevention Plan Compliance Notebook
3.2.1.5 Stormwater Notice of Termination for Construction Activities
3.2.2 Erosion and Sediment Control Measures
3.2.2.1 Erosion Control
3.2.2.2 Sediment Control Practices
3.2.3 Work Area Limits
3.2.4 Contractor Facilities and Work Areas
3.2.5 Municipal Separate Storm Sewer System (MS4) Management
3.3 SURFACE AND GROUNDWATER
3.3.1 Cofferdams, Diversions, and Dewatering
3.3.2 Waters of the United States
3.4 PROTECTION OF CULTURAL RESOURCES
3.4.1 Archaeological Resources
3.4.2 Historical Resources
3.5 AIR RESOURCES
3.5.1 Preconstruction Air Permits
3.5.2 Oil or Dual-fuel Boilers and Furnaces
3.5.3 Burning
3.5.4 Class I and II ODS Prohibition

CONFORMED

3.5.5 Accidental Venting of Refrigerant
3.5.6 EPA Certification Requirements
3.5.7 Dust Control
3.5.7.1 Particulates
3.5.7.2 Abrasive Blasting
3.5.8 Odors
3.6 WASTE MINIMIZATION
3.6.1 Salvage, Reuse and Recycle
3.6.2 Nonhazardous Solid Waste Diversion Report
3.7 WASTE MANAGEMENT AND DISPOSAL
3.7.1 Waste Determination Documentation
3.7.2 Solid Waste Management
3.7.2.1 Solid Waste Management Report
3.7.2.2 Control and Management of Solid Wastes
3.7.3 Control and Management of Hazardous Waste
3.7.3.1 Hazardous Waste/Debris Management
3.7.3.2 Waste Storage/Satellite Accumulation/90 Day Storage Areas
3.7.3.3 Hazardous Waste Disposal
3.7.3.3.1 Responsibilities for Contractor's Disposal
3.7.3.3.1.1 Services
3.7.3.3.1.2 Samples
3.7.3.3.1.3 Analysis
3.7.3.3.1.4 Labeling
3.7.3.4 Universal Waste Management
3.7.3.5 Electronics End-of-Life Management
3.7.3.6 Disposal Documentation for Hazardous and Regulated Waste
3.7.4 Releases/Spills of Oil and Hazardous Substances
3.7.4.1 Response and Notifications
3.7.4.2 Clean Up
3.7.5 Mercury Materials
3.7.6 Wastewater
3.7.6.1 Disposal of wastewater must be as specified below.
3.7.6.1.1 Treatment
3.7.6.1.2 Surface Discharge
3.7.6.1.3 Land Application
3.8 HAZARDOUS MATERIAL MANAGEMENT
3.9 PREVIOUSLY USED EQUIPMENT
3.10 CONTROL AND MANAGEMENT OF LEAD-BASED PAINT (LBP)
3.11 CONTROL AND MANAGEMENT OF POLYCHLORINATED BIPHENYLS (PCBS)
3.12 CONTROL AND MANAGEMENT OF LIGHTING BALLAST AND LAMPS CONTAINING PCBS
3.13 PETROLEUM, OIL, LUBRICANT (POL) STORAGE AND FUELING
3.13.1 Used Oil Management
3.13.2 Oil Storage Including Fuel Tanks
3.14 INADVERTENT DISCOVERY OF PETROLEUM-CONTAMINATED SOIL OR HAZARDOUS WASTES
3.15 CHLORDANE
3.16 SOUND INTRUSION
3.17 POST CONSTRUCTION CLEANUP

-- End of Section Table of Contents --

CONFORMED

SECTION 01 57 19

TEMPORARY ENVIRONMENTAL CONTROLS
11/15

PART 1 GENERAL

1.1 REFERENCES

The publications listed below form a part of this specification to the extent referenced. The publications are referred to within the text by the basic designation only.

U.S. NATIONAL ARCHIVES AND RECORDS ADMINISTRATION (NARA)

29 CFR 1910.120	Hazardous Waste Operations and Emergency Response
40 CFR 112	Oil Pollution Prevention
40 CFR 122.26	Storm Water Discharges (Applicable to State NPDES Programs, see section 123.25)
40 CFR 241	Guidelines for Disposal of Solid Waste
40 CFR 243	Guidelines for the Storage and Collection of Residential, Commercial, and Institutional Solid Waste
40 CFR 258	Subtitle D Landfill Requirements
40 CFR 260	Hazardous Waste Management System: General
40 CFR 261	Identification and Listing of Hazardous Waste
40 CFR 261.7	Residues of Hazardous Waste in Empty Containers
40 CFR 262	Standards Applicable to Generators of Hazardous Waste
40 CFR 262.31	Standards Applicable to Generators of Hazardous Waste-Labeling
40 CFR 262.34	Standards Applicable to Generators of Hazardous Waste-Accumulation Time
40 CFR 263	Standards Applicable to Transporters of Hazardous Waste
40 CFR 264	Standards for Owners and Operators of Hazardous Waste Treatment, Storage, and Disposal Facilities
40 CFR 265	Interim Status Standards for Owners and

CONFORMED

	Operators of Hazardous Waste Treatment, Storage, and Disposal Facilities
40 CFR 266	Standards for the Management of Specific Hazardous Wastes and Specific Types of Hazardous Waste Management Facilities
40 CFR 268	Land Disposal Restrictions
40 CFR 273	Standards For Universal Waste Management
40 CFR 273.2	Standards for Universal Waste Management - Batteries
40 CFR 273.4	Standards for Universal Waste Management - Mercury Containing Equipment
40 CFR 273.5	Standards for Universal Waste Management - Lamps
40 CFR 279	Standards for the Management of Used Oil
40 CFR 300	National Oil and Hazardous Substances Pollution Contingency Plan
40 CFR 300.125	National Oil and Hazardous Substances Pollution Contingency Plan - Notification and Communications
40 CFR 355	Emergency Planning and Notification
40 CFR 403	General Pretreatment Regulations for Existing and New Sources of Pollution
40 CFR 50	National Primary and Secondary Ambient Air Quality Standards
40 CFR 60	Standards of Performance for New Stationary Sources
40 CFR 63	National Emission Standards for Hazardous Air Pollutants for Source Categories
40 CFR 64	Compliance Assurance Monitoring
40 CFR 745	Lead-Based Paint Poisoning Prevention in Certain Residential Structures
40 CFR 761	Polychlorinated Biphenyls (PCBs) Manufacturing, Processing, Distribution in Commerce, and Use Prohibitions
49 CFR 171	General Information, Regulations, and Definitions
49 CFR 172	Hazardous Materials Table, Special Provisions, Hazardous Materials Communications, Emergency Response Information, and Training Requirements

CONFORMED

49 CFR 173	Shippers - General Requirements for Shipments and Packagings
49 CFR 178	Specifications for Packagings

1.2 DEFINITIONS

1.2.1 Class I and II Ozone Depleting Substance (ODS)

Class I ODS is defined in Section 602(a) of The Clean Air Act. A list of Class I ODS can be found on the EPA website at the following weblink. http://www.epa.gov/ozone/science/ods/classone.html.

Class II ODS is defined in Section 602(s) of The Clean Air Act. A list of Class II ODS can be found on the EPA website at the following weblink. http://www.epa.gov/ozone/science/ods/classtwo.html.

1.2.2 Contractor Generated Hazardous Waste

Contractor generated hazardous waste is materials that, if abandoned or disposed of, may meet the definition of a hazardous waste. These waste streams would typically consist of material brought on site by the Contractor to execute work, but are not fully consumed during the course of construction. Examples include, but are not limited to, excess paint thinners (i.e. methyl ethyl ketone, toluene), waste thinners, excess paints, excess solvents, waste solvents, excess pesticides, and contaminated pesticide equipment rinse water.

1.2.3 Electronics Waste

Electronics waste is discarded electronic devices intended for salvage, recycling, or disposal.

1.2.4 Environmental Pollution and Damage

Environmental pollution and damage is the presence of chemical, physical, or biological elements or agents which adversely affect human health or welfare; unfavorably alter ecological balances of importance to human life; affect other species of importance to humankind; or degrade the environment aesthetically, culturally or historically.

1.2.5 Environmental Protection

Environmental protection is the prevention/control of pollution and habitat disruption that may occur to the environment during construction. The control of environmental pollution and damage requires consideration of land, water, and air; biological and cultural resources; and includes management of visual aesthetics; noise; solid, chemical, gaseous, and liquid waste; radiant energy and radioactive material as well as other pollutants.

1.2.6 Hazardous Debris

As defined in paragraph SOLID WASTE, debris that contains listed hazardous waste (either on the debris surface, or in its interstices, such as pore structure) in accordance with 40 CFR 261. Hazardous debris also includes debris that exhibits a characteristic of hazardous waste in accordance with 40 CFR 261.

CONFORMED

1.2.7 Hazardous Materials

Hazardous materials as defined in 49 CFR 171 and listed in 49 CFR 172.

Hazardous material is any material that: Is regulated as a hazardous material in accordance with 49 CFR 173; or requires a Safety Data Sheet (SDS) in accordance with 29 CFR 1910.120; or during end use, treatment, handling, packaging, storage, transportation, or disposal meets or has components that meet or have potential to meet the definition of a hazardous waste as defined by 40 CFR 261 Subparts A, B, C, or D. Designation of a material by this definition, when separately regulated or controlled by other sections or directives, does not eliminate the need for adherence to that hazard-specific guidance which takes precedence over this section for "control" purposes. Such material includes ammunition, weapons, explosive actuated devices, propellants, pyrotechnics, chemical and biological warfare materials, medical and pharmaceutical supplies, medical waste and infectious materials, bulk fuels, radioactive materials, and other materials such as asbestos, mercury, and polychlorinated biphenyls (PCBs).

1.2.8 Hazardous Waste

Hazardous Waste is any material that meets the definition of a solid waste and exhibit a hazardous characteristic (ignitability, corrosivity, reactivity, or toxicity) as specified in 40 CFR 261, Subpart C, or contains a listed hazardous waste as identified in 40 CFR 261, Subpart D.

1.2.9 Land Application

Land Application means spreading or spraying discharge water at a rate that allows the water to percolate into the soil. No sheeting action, soil erosion, discharge into storm sewers, discharge into defined drainage areas, or discharge into the "waters of the United States" must occur. Comply with federal, state, and local laws and regulations.

1.2.10 Municipal Separate Storm Sewer System (MS4) Permit

MS4 permits are those held by installations to obtain NPDES permit coverage for their stormwater discharges.

1.2.11 National Pollutant Discharge Elimination System (NPDES)

The NPDES permit program controls water pollution by regulating point sources that discharge pollutants into waters of the United States.

1.2.12 Oily Waste

Oily waste are those materials that are, or were, mixed with Petroleum, Oils, and Lubricants (POLs) and have become separated from that POLs. Oily wastes also means materials, including wastewaters, centrifuge solids, filter residues or sludges, bottom sediments, tank bottoms, and sorbents which have come into contact with and have been contaminated by, POLs and may be appropriately tested and discarded in a manner which is in compliance with other state and local requirements.

This definition includes materials such as oily rags, "kitty litter" sorbent clay and organic sorbent material. These materials may be land filled provided that: It is not prohibited in other state regulations or

CONFORMED

local ordinances; the amount generated is "de minimus" (a small amount); it is the result of minor leaks or spills resulting from normal process operations; and free-flowing oil has been removed to the practicable extent possible. Large quantities of this material, generated as a result of a major spill or in lieu of proper maintenance of the processing equipment, are a solid waste. As a solid waste, perform a hazardous waste determination prior to disposal. As this can be an expensive process, it is recommended that this type of waste be minimized through good housekeeping practices and employee education.

1.2.13 Regulated Waste

Regulated waste are solid wastes that have specific additional federal, state, or local controls for handling, storage, or disposal.

1.2.14 Sediment

Sediment is soil and other debris that have eroded and have been transported by runoff water or wind.

1.2.15 Solid Waste

Solid waste is a solid, liquid, semi-solid or contained gaseous waste. A solid waste can be a hazardous waste, non-hazardous waste, or non-Resource Conservation and Recovery Act (RCRA) regulated waste. Types of solid waste typically generated at construction sites may include:

1.2.15.1 Debris

Debris is non-hazardous solid material generated during the construction, demolition, or renovation of a structure that exceeds 2.5-inch particle size that is: a manufactured object; plant or animal matter; or natural geologic material (for example, cobbles and boulders), broken or removed concrete, masonry, and rock asphalt paving; ceramics; roofing paper and shingles. Inert materials may be reinforced with or contain ferrous wire, rods, accessories and weldments. A mixture of debris and other material such as soil or sludge is also subject to regulation as debris if the mixture is comprised primarily of debris by volume, based on visual inspection.

1.2.15.2 Green Waste

Green waste is the vegetative matter from landscaping, land clearing and grubbing, including, but not limited to, grass, bushes, scrubs, small trees and saplings, tree stumps and plant roots. Marketable trees, grasses and plants that are indicated to remain, be re-located, or be re-used are not included.

1.2.15.3 Material not regulated as solid waste

Material not regulated as solid waste is nuclear source or byproduct materials regulated under the Federal Atomic Energy Act of 1954 as amended; suspended or dissolved materials in domestic sewage effluent or irrigation return flows, or other regulated point source discharges; regulated air emissions; and fluids or wastes associated with natural gas or crude oil exploration or production.

CONFORMED

1.2.15.4 Non-Hazardous Waste

Non-hazardous waste is waste that is excluded from, or does not meet, hazardous waste criteria in accordance with 40 CFR 263.

1.2.15.5 Recyclables

Recyclables are materials, equipment and assemblies such as doors, windows, door and window frames, plumbing fixtures, glazing and mirrors that are recovered and sold as recyclable, and structural components. It also includes commercial-grade refrigeration equipment with Freon removed, household appliances where the basic material content is metal, clean polyethylene terephthalate bottles, cooking oil, used fuel oil, textiles, high-grade paper products and corrugated cardboard, stackable pallets in good condition, clean crating material, and clean rubber/vehicle tires. Metal meeting the definition of lead contaminated or lead based paint contaminated may be included as recyclable if sold to a scrap metal company. Paint cans that meet the definition of empty containers in accordance with 40 CFR 261.7 may be included as recyclable if sold to a scrap metal company.

1.2.15.6 Surplus Soil

Surplus soil is existing soil that is in excess of what is required for this work, including aggregates intended, but not used, for on-site mixing of concrete, mortars, and paving. Contaminated soil meeting the definition of hazardous material or hazardous waste is not included and must be managed in accordance with paragraph HAZARDOUS MATERIAL MANAGEMENT.

1.2.15.7 Scrap Metal

This includes scrap and excess ferrous and non-ferrous metals such as reinforcing steel, structural shapes, pipe, and wire that are recovered or collected and disposed of as scrap. Scrap metal meeting the definition of hazardous material or hazardous waste is not included.

1.2.15.8 Wood

Wood is dimension and non-dimension lumber, plywood, chipboard, hardboard. Treated or painted wood that meets the definition of lead contaminated or lead based contaminated paint is not included. Treated wood includes, but is not limited to, lumber, utility poles, crossties, and other wood products with chemical treatment.

1.2.16 Surface Discharge

Surface discharge means discharge of water into drainage ditches, storm sewers, creeks or "waters of the United States". Surface discharges are discrete, identifiable sources and require a permit from the governing agency. Comply with federal, state, and local laws and regulations.

1.2.17 Wastewater

Wastewater is the used water and solids from a community that flow to a treatment plant.

1.2.17.1 Stormwater

Stormwater is any precipitation in an urban or suburban area that does not

CONFORMED

evaporate or soak into the ground, but instead collects and flows into storm drains, rivers, and streams.

1.2.18 Waters of the United States

Waters of the United States means Federally jurisdictional waters, including wetlands, that are subject to regulation under Section 404 of the Clean Water Act or navigable waters, as defined under the Rivers and Harbors Act.

1.2.19 Wetlands

Wetlands are those areas that are inundated or saturated by surface or groundwater at a frequency and duration sufficient to support, and that under normal circumstances do support, a prevalence of vegetation typically adapted for life in saturated soil conditions.

1.2.20 Universal Waste

The universal waste regulations streamline collection requirements for certain hazardous wastes in the following categories: batteries, pesticides, mercury-containing equipment (for example, thermostats), and lamps (for example, fluorescent bulbs). The rule is designed to reduce hazardous waste in the municipal solid waste (MSW) stream by making it easier for universal waste handlers to collect these items and send them for recycling or proper disposal. These regulations can be found at 40 CFR 273.

1.3 SUBMITTALS

Government approval is required for submittals with a "G" designation; submittals not having a "G" designation are for information only. When used, a designation following the "G" designation identifies the office that will review the submittal for the Government. Submit the following in accordance with Section 01 33 00 SUBMITTAL PROCEDURES:

SD-01 Preconstruction Submittals

Preconstruction Survey; G

Solid Waste Management Permit; G

Regulatory Notifications; G

Environmental Protection Plan; G

Stormwater Notice of Intent (for NPDES coverage under the general permit for construction activities); G

Dirt and Dust Control Plan; G

Employee Training Records; G

SD-06 Test Reports

Laboratory Analysis

Inspection Reports

CONFORMED

Solid Waste Management Report; G

SD-07 Certificates

Employee Training Records; G

Erosion and Sediment Control Inspector Qualifications

SD-11 Closeout Submittals

Stormwater Pollution Prevention Plan Compliance Notebook; G

Stormwater Notice of Termination (for NPDES coverage under the general permit for construction activities); G

Environmental Records Binder; G

Waste Determination Documentation; G

Disposal Documentation for Hazardous and Regulated Waste; G

Assembled Employee Training Records; G

Solid Waste Management Permit; G

Solid Waste Management Report; G

Hazardous Waste/Debris Management; G

Regulatory Notifications; G

Sales Documentation; G

Contractor Certification

1.4 ENVIRONMENTAL PROTECTION REQUIREMENTS

Provide and maintain, during the life of the contract, environmental protection as defined. Plan for and provide environmental protective measures to control pollution that develops during construction practice. Plan for and provide environmental protective measures required to correct conditions that develop during the construction of permanent or temporary environmental features associated with the project. Protect the environmental resources within the project boundaries and those affected outside the limits of permanent work during the entire duration of this Contract. Comply with federal, state, and local regulations pertaining to the environment, including water, air, solid waste, hazardous waste and substances, oily substances, and noise pollution.

Tests and procedures assessing whether construction operations comply with Applicable Environmental Laws may be required. Analytical work must be performed by qualified laboratories; and where required by law, the laboratories must be certified.

1.5 QUALITY ASSURANCE

1.5.1 Preconstruction Survey and Protection of Features

This paragraph supplements the Contract Clause PROTECTION OF EXISTING

CONFORMED

VEGETATION, STRUCTURES, EQUIPMENT, UTILITIES, AND IMPROVEMENTS. Prior to start of any onsite construction activities, perform a Preconstruction Survey of the project site with the Contracting Officer, and take photographs showing existing environmental conditions in and adjacent to the site. Submit a report for the record. Include in the report a plan describing the features requiring protection under the provisions of the Contract Clauses, which are not specifically identified on the drawings as environmental features requiring protection along with the condition of trees, shrubs and grassed areas immediately adjacent to the site of work and adjacent to the Contractor's assigned storage area and access route(s), as applicable. The Contractor and the Contracting Officer will sign this survey report upon mutual agreement regarding its accuracy and completeness. Protect those environmental features included in the survey report and any indicated on the drawings, regardless of interference that their preservation may cause to the work under the Contract.

1.5.2 Regulatory Notifications

Provide regulatory notification requirements in accordance with federal, state and local regulations. In cases where the Government will also provide public notification (such as stormwater permitting), coordinate with the Contracting Officer. Submit copies of regulatory notifications to the Contracting Officer within 7 days prior to commencement of work activities. Typically, regulatory notifications must be provided for the following (this listing is not all-inclusive): demolition, renovation, NPDES defined site work, construction, removal or use of a permitted air emissions source, and remediation of controlled substances (asbestos, hazardous waste, lead paint).

1.5.3 Environmental Brief

Attend an environmental brief to be included in the preconstruction meeting. Provide the following information: types, quantities, and use of hazardous materials that will be brought onto the installation; and types and quantities of wastes/wastewater that may be generated during the Contract. Discuss the results of the Preconstruction Survey at this time.

Prior to initiating any work on site, meet with the Contracting Officer and installation Environmental Office to discuss the proposed Environmental Protection Plan (EPP). Develop a mutual understanding relative to the details of environmental protection, including measures for protecting natural and cultural resources, required reports, required permits, permit requirements (such as mitigation measures), and other measures to be taken.

1.5.4 Employee Training Records

Prepare and maintain Employee Training Records throughout the term of the contract meeting applicable 40 CFR requirements. Provide Employee Training Records in the Environmental Records Binder. Ensure every employee completes a program of classroom instruction or on-the-job training that teaches them to perform their duties in a way that ensures compliance with federal, state and local regulatory requirements for RCRA Large Quantity Generator. Provide a Position Description for each employee, by subcontractor, based on the Davis-Bacon Wage Rate designation or other equivalent method, evaluating the employee's association with hazardous and regulated wastes. This Position Description will include training requirements as defined in 40 CFR 265 for a Large Quantity Generator facility. Submit these Assembled Employee Training Records to the Contracting Officer at the conclusion of the project, unless otherwise

CONFORMED

directed.

Train personnel to meet EPA and state requirements. Conduct environmental protection/pollution control meetings for personnel prior to commencing construction activities. Contact additional meetings for new personnel and when site conditions change. Include in the training and meeting agenda: methods of detecting and avoiding pollution; familiarization with statutory and contractual pollution standards; installation and care of devices, vegetative covers, and instruments required for monitoring purposes to ensure adequate and continuous environmental protection/pollution control; anticipated hazardous or toxic chemicals or wastes, and other regulated contaminants; recognition and protection of archaeological sites, artifacts, waters of the United States, and endangered species and their habitat that are known to be in the area. Provide copy of the Erosion and Sediment Control Inspector Qualifications.

1.5.5 Non-Compliance Notifications

The Contracting Officer will notify the Contractor in writing of any observed noncompliance with federal, state or local environmental laws or regulations, permits, and other elements of the Contractor's EPP. After receipt of such notice, inform the Contracting Officer of the proposed corrective action and take such action when approved by the Contracting Officer. The Contracting Officer may issue an order stopping all or part of the work until satisfactory corrective action has been taken. No time extensions will be granted or equitable adjustments allowed for any such suspensions. This is in addition to any other actions the Contracting Officer may take under the contract, or in accordance with the Federal Acquisition Regulation or Federal Law.

1.6 ENVIRONMENTAL PROTECTION PLAN

The purpose of the EPP is to present an overview of known or potential environmental issues that must be considered and addressed during construction. Incorporate construction related objectives and targets from the installation's EMS into the EPP. Include in the EPP measures for protecting natural and cultural resources, required reports, and other measures to be taken. Meet with the Contracting Officer or Contracting Officer Representative to discuss the EPP and develop a mutual understanding relative to the details for environmental protection including measures for protecting natural resources, required reports, and other measures to be taken. Submit the EPP within 15 days after notice to proceed and not less than 10 days before the preconstruction meeting. Revise the EPP throughout the project to include any reporting requirements, changes in site conditions, or contract modifications that change the project scope of work in a way that could have an environmental impact. No requirement in this section will relieve the Contractor of any applicable federal, state, and local environmental protection laws and regulations. During Construction, identify, implement, and submit for approval any additional requirements to be included in the EPP. Maintain the current version onsite.

The EPP includes, but is not limited to, the following elements:

1.6.1 General Overview and Purpose

1.6.1.1 Descriptions

A brief description of each specific plan required by environmental permit

CONFORMED

or elsewhere in this Contract such as stormwater pollution prevention plan, spill control plan, solid waste management plan, wastewater management plan, air pollution control plan, contaminant prevention plan, a historical, archaeological, cultural resources, biological resources and wetlands plan, traffic control plan Hazardous, Toxic and Radioactive Waste (HTRW) Plan, Non-Hazardous Solid Waste Disposal Plan, borrowing material plan.

1.6.1.2 Duties

The duties and level of authority assigned to the person(s) on the job site who oversee environmental compliance, such as who is responsible for adherence to the EPP, who is responsible for spill cleanup and training personnel on spill response procedures, who is responsible for manifesting hazardous waste to be removed from the site (if applicable), and who is responsible for training the Contractor's environmental protection personnel.

1.6.1.3 Procedures

A copy of any standard or project-specific operating procedures that will be used to effectively manage and protect the environment on the project site.

1.6.1.4 Communications

Communication and training procedures that will be used to convey environmental management requirements to Contractor employees and subcontractors.

1.6.1.5 Contact Information

Emergency contact information contact information (office phone number, cell phone number, and e-mail address).

1.6.2 General Site Information

1.6.2.1 Drawings

Drawings showing locations of proposed temporary excavations or embankments for haul roads, stream crossings, jurisdictional wetlands, material storage areas, structures, sanitary facilities, storm drains and conveyances, and stockpiles of excess soil.

1.6.2.2 Work Area

Work area plan showing the proposed activity in each portion of the area and identify the areas of limited use or nonuse. Include measures for marking the limits of use areas, including methods for protection of features to be preserved within authorized work areas and methods to control runoff and to contain materials on site, and a traffic control plan.

1.6.2.3 Documentation

A letter signed by an officer of the firm appointing the Environmental Manager and stating that person is responsible for managing and implementing the Environmental Program as described in this contract. Include in this letter the Environmental Manager's authority to direct the removal and replacement of non-conforming work.

CONFORMED

1.6.3 Management of Natural Resources

a. Land resources

b. Tree protection

c. Replacement of damaged landscape features

d. Temporary construction

e. Stream crossings

f. Fish and wildlife resources

g. Wetland areas

1.6.4 Protection of Historical and Archaeological Resources

a. Objectives

b. Methods

1.6.5 Stormwater Management and Control

a. Ground cover

b. Erodible soils

c. Temporary measures

(1) Structural Practices

(2) Temporary and permanent stabilization

d. Effective selection, implementation and maintenance of Best Management Practices (BMPs).

1.6.6 Protection of the Environment from Waste Derived from Contractor Operations

Control and disposal of solid and sanitary waste. Control and disposal of hazardous waste.

This item consist of the management procedures for hazardous waste to be generated. The elements of those procedures will coincide with the Installation Hazardous Waste Management Plan. The Contracting Officer will provide a copy of the Installation Hazardous Waste Management Plan. As a minimum, include the following:

a. List of the types of hazardous wastes expected to be generated

b. Procedures to ensure a written waste determination is made for appropriate wastes that are to be generated

c. Sampling/analysis plan, including laboratory analysis method(s) that will be used for waste determinations and copies of relevant laboratory certifications

CONFORMED

d. Methods and proposed locations for hazardous waste accumulation/storage (that is, in tanks or containers)

e. Management procedures for storage, labeling, transportation, and disposal of waste (treatment of waste is not allowed unless specifically noted)

f. Management procedures and regulatory documentation ensuring disposal of hazardous waste complies with Land Disposal Restrictions (40 CFR 268)

g. Management procedures for recyclable hazardous materials such as lead-acid batteries, used oil, and similar

h. Used oil management procedures in accordance with 40 CFR 279; Hazardous waste minimization procedures

i. Plans for the disposal of hazardous waste by permitted facilities; and Procedures to be employed to ensure required employee training records are maintained.

1.6.7 Prevention of Releases to the Environment

Procedures to prevent releases to the environment

Notifications in the event of a release to the environment

1.6.8 Regulatory Notification and Permits

List what notifications and permit applications must be made. Some permits require up to 180 days to obtain. Demonstrate that those permits have been obtained or applied for by including copies of applicable environmental permits. The EPP will not be approved until the permits have been obtained.

1.6.9 Clean Air Act Compliance

1.6.9.1 Haul Route

Submit truck and material haul routes along with a Dirt and Dust Control Plan for controlling dirt, debris, and dust on Installation roadways. As a minimum, identify in the plan the subcontractor and equipment for cleaning along the haul route and measures to reduce dirt, dust, and debris from roadways.

1.6.9.2 Pollution Generating Equipment

Identify air pollution generating equipment or processes that may require federal, state, or local permits under the Clean Air Act. Determine requirements based on any current installation permits and the impacts of the project. Provide a list of all fixed or mobile equipment, machinery or operations that could generate air emissions during the project to the Installation Environmental Office (Air Program Manager).

1.6.9.3 Stationary Internal Combustion Engines

Identify portable and stationary internal combustion engines that will be supplied, used or serviced. Comply with 40 CFR 60 Subpart IIII, 40 CFR 60 Subpart JJJJ, 40 CFR 63 Subpart ZZZZ, and local regulations as applicable. At minimum, include the make, model, serial number, manufacture date, size (engine brake horsepower), and EPA emission certification status of each

CONFORMED

engine. Maintain applicable records and log hours of operation and fuel use. Logs must include reasons for operation and delineate between emergency and non-emergency operation.

1.6.9.4 Refrigerants

Identify management practices to ensure that heating, ventilation, and air conditioning (HVAC) work involving refrigerants complies with 40 CFR 82 requirements. Technicians must be certified, maintain copies of certification on site, use certified equipment and log work that requires the addition or removal of refrigerant. Any refrigerant reclaimed is the property of the Government, coordinate with the Installation Environmental Office to determine the appropriate turn in location.

1.6.9.5 Air Pollution-engineering Processes

Identify planned air pollution-generating processes and management control measures (including, but not limited to, spray painting, abrasive blasting, demolition, material handling, fugitive dust, and fugitive emissions). Log hours of operations and track quantities of materials used.

1.6.9.6 Ground Disturbing

If ground disturbing construction activities exceed 15 acres per day, conduct PM 10 and PM 2.5 dust modeling to determine if the project would be in compliance with the Bay Area Air Quality Management District's PM 10 substantial California Ambient Air Quality Standard (CAAQS) significance threshold and PM 2.5 CAAQS threshold. If the project would violate these thresholds, then identify sufficient control measures to eliminate any significant PM 10 and PM 2.5 emissions.

1.6.9.7 Compliant Materials

Provide the Government a list of and SDSs for all hazardous materials proposed for use on site. Materials must be compliant with all Clean Air Act regulations for emissions including solvent and volatile organic compound contents, and applicable National Emission Standards for Hazardous Air Pollutants requirements. The Government may alter or limit use of specific materials as needed to meet installation permit requirements for emissions.

1.7 LICENSES AND PERMITS

Obtain licenses and permits required for the construction of the project and in accordance with FAR 52.236-7. Notify the Government of all general use permitted equipment the Contractor plans to use on site. This paragraph supplements the Contractor's responsibility under FAR 52.236-7.

1.8 ENVIRONMENTAL RECORDS BINDER

Maintain on-site a separate three-ring Environmental Records Binder and submit at the completion of the project. Make separate parts within the binder that correspond to each submittal listed under paragraph CLOSEOUT SUBMITTALS in this section.

1.9 SOLID WASTE MANAGEMENT PERMIT

Provide the Contracting Officer with written notification of the quantity of anticipated solid waste or debris that is anticipated or estimated to be

CONFORMED

generated by construction. Include in the report the locations where various types of waste will be disposed or recycled. Include letters of acceptance from the receiving location or as applicable; submit one copy of the receiving location state and local Solid Waste Management Permit or license showing such agency's approval of the disposal plan before transporting wastes off Government property.

1.9.1 Solid Waste Management Report

Monthly, submit a solid waste disposal report to the Contracting Officer. For each waste, the report will state the classification (using the definitions provided in this section), amount, location, and name of the business receiving the solid waste.

PART 2 PRODUCTS

Not Used

PART 3 EXECUTION

3.1 PROTECTION OF NATURAL RESOURCES

Minimize interference with, disturbance to, and damage to fish, wildlife, and plants, including their habitats. Prior to the commencement of activities, consult with the Installation Environmental Office, regarding rare species or sensitive habitats that need to be protected. The protection of rare, threatened, and endangered animal and plant species identified, including their habitats, is the Contractor's responsibility.

Preserve the natural resources within the project boundaries and outside the limits of permanent work. Restore to an equivalent or improved condition upon completion of work that is consistent with the requirements of the Installation Environmental Office or as otherwise specified. Confine construction activities to within the limits of the work indicated or specified.

3.1.1 Flow Ways

Do not alter water flows or otherwise significantly disturb the native habitat adjacent to the project and critical to the survival of fish and wildlife, except as specified and permitted.

3.1.2 Vegetation

Except in areas to be cleared, do not remove, cut, deface, injure, or destroy trees or shrubs without the Contracting Officer's permission. Do not fasten or attach ropes, cables, or guys to existing nearby trees for anchorages unless authorized by the Contracting Officer. Where such use of attached ropes, cables, or guys is authorized, the Contractor is responsible for any resultant damage.

Protect existing trees that are to remain to ensure they are not injured, bruised, defaced, or otherwise damaged by construction operations. Remove displaced rocks from uncleared areas. Coordinate with the Contracting Officer and Installation Environmental Office to determine appropriate action for trees and other landscape features scarred or damaged by equipment operations.

CONFORMED

3.1.3 Streams

Stream crossings must allow movement of materials or equipment without violating water pollution control standards of the federal, state, and local governments. Construction of stream crossing structures must be in compliance with any required permits including, but not limited to, Clean Water Act Section 404, and Section 401 Water Quality.

The Contracting Officer's approval and appropriate permits are required before any equipment will be permitted to ford live streams. In areas where frequent crossings are required, install temporary culverts or bridges. Obtain Contracting Officer's approval prior to installation. Remove temporary culverts or bridges upon completion of work, and repair the area to its original condition unless otherwise required by the Contracting Officer.

3.2 STORMWATER

Do not discharge stormwater from construction sites to the sanitary sewer. If the water is noted or suspected of being contaminated, it may only be released to the storm drain system if the discharge is specifically permitted. Obtain authorization in advance from the Installation Environmental Office for any release of contaminated water.

3.2.1 Construction General Permit

Provide a Construction General Permit as required by 40 CFR 122.26 or the State of California General Permit. Under the terms and conditions of the permit, install, inspect, maintain BMPs, prepare stormwater erosion and sediment control inspection reports, and submit SWPPP inspection reports. Maintain construction operations and management in compliance with the terms and conditions of the general permit for stormwater discharges from construction activities.

3.2.1.1 Stormwater Pollution Prevention Plan

Submit a project-specific Stormwater Pollution Prevention Plan (SWPPP) to the Contracting Officer for approval, prior to the commencement of work. The SWPPP must meet the requirements of 40 CFR 122.26 and the California State General Permit for stormwater discharges from construction sites.

Include the following:

a. Comply with terms of the state general permit for stormwater discharges from construction activities. Prepare SWPPP in accordance with state requirements.

b. Select applicable BMPs from EPA 833-R-060-4 located at http://water.epa.gov/polwaste/npdes/swbmp/Construction-Site-StormWater-Run-Off-Control.cfm or in accordance with applicable state or local requirements. It shall include the following BMPs, as minimum:

   1. Install silt fence along Berryessa Creek to prevent silt and sediment from entering the creek channel.

   2. Stabilize and reseed with native grasses all soils and exposed areas disturbed by construction.

   3. Obtain dewatering permit from RWQCB and implement applicable water

CONFORMED

quality monitoring during dewatering activities.

4. Prepare and implement an Erosion and Sediment Control Plan consistent with RWQCB policy and guidelines.

c. Include a completed copy of the Notice of Intent, BMP Inspection Report Template, and Stormwater Notice of Termination, except for the effective date.

3.2.1.2 Stormwater Notice of Intent for Construction Activities

In conformance with this section and sections 01 57 20.00 10 and 01 57 23, it shall be the Contractor's responsibility to develop a Storm Water Pollution Prevention Plan (SWPPP) for the construction area. SWPPP elements and work shall be confined within the ROW and/or easement limits, with a minimum interior buffer of one foot. The Contractor shall be solely responsible for compliance with Section 404 of the Clean Water Act. The Contractor shall comply with all permit conditions and notification requirements as described under the applicable permit covering the work under this project.

Prepare and submit the Notice of Intent for NPDES coverage under the general permit for construction activities to the Contracting Officer for review and approval.

Submit the approved NOI and appropriate permit fees onto the appropriate federal or state agency for approval. No land disturbing activities may commence without permit coverage. Maintain an approved copy of the SWPPP at the onsite construction office, and continually update as regulations require, reflecting current site conditions.

3.2.1.3 Inspection Reports

Submit "Inspection Reports" to the Contracting Officer in accordance with the State of California Construction General Permit.

3.2.1.4 Stormwater Pollution Prevention Plan Compliance Notebook

Create and maintain a three ring binder of documents that demonstrate compliance with the Construction General Permit. Include a copy of the permit Notice of Intent, proof of permit fee payment, SWPPP and SWPPP update amendments, inspection reports and related corrective action records, copies of correspondence with the California State Permitting Agency, and a copy of the permit Notice of Termination in the binder. At project completion, the notebook becomes property of the Government. Provide the compliance notebook to the Contracting Officer.

3.2.1.5 Stormwater Notice of Termination for Construction Activities

Submit a Notice of Termination to the Contracting Officer for approval once construction is complete and final stabilization has been achieved on all portions of the site for which the permittee is responsible. Once approved, submit the Notice of Termination to the appropriate state or federal agency.

3.2.2 Erosion and Sediment Control Measures

Provide erosion and sediment control measures in accordance with state and local laws and regulations. Preserve vegetation to the maximum extent

CONFORMED

practicable.

Erosion control inspection reports may be compiled as part of a stormwater pollution prevention plan inspection reports.

3.2.2.1 Erosion Control

Prevent erosion by mulching, Compost Blankets, Geotextiles, temporary slope drains, stabilize slopes by chemical stabilization, sodding, seeding, or such combination of these methods necessary for effective erosion control. Use of hay bales is prohibited.

Provide seeding in accordance with Section 32 92 19 SEEDING.

3.2.2.2 Sediment Control Practices

Implement sediment control practices to divert flows from exposed soils, temporarily store flows, or otherwise limit runoff and the discharge of pollutants from exposed areas of the site. Implement sediment control practices prior to soil disturbance and prior to creating areas with concentrated flow, during the construction process to minimize erosion and sediment laden runoff. Include the following devices: silt fence, temporary diversion dikes, and storm drain inlet protection.

3.2.3 Work Area Limits

Mark the areas that need not be disturbed under this Contract prior to commencing construction activities. Mark or fence isolated areas within the general work area that are not to be disturbed. Protect monuments and markers before construction operations commence. Where construction operations are to be conducted during darkness, any markers must be visible in the dark. Personnel must be knowledgeable of the purpose for marking and protecting particular objects.

3.2.4 Contractor Facilities and Work Areas

Place field offices, staging areas, stockpile storage, and temporary buildings in areas designated on the drawings or as directed by the Contracting Officer. Move or relocate the Contractor facilities only when approved by the Government. Provide erosion and sediment controls for onsite borrow and spoil areas to prevent sediment from entering nearby waters. Control temporary excavation and embankments for plant or work areas to protect adjacent areas.

3.2.5 Municipal Separate Storm Sewer System (MS4) Management

Comply with the Installation's MS4 permit requirements.

3.3 SURFACE AND GROUNDWATER

3.3.1 Cofferdams, Diversions, and Dewatering

Construction operations for dewatering, removal of cofferdams, tailrace excavation, and tunnel closure must be constantly controlled to maintain compliance with existing state water quality standards and designated uses of the surface water body. Comply with the State of California water quality standards and anti-degradation provisions and the Clean Water Act Section 404, Nation Wide Permit No. [_____]. Do not discharge excavation ground water to the sanitary sewer, storm drains, or to surface waters

CONFORMED

without prior specific authorization in writing from the Installation Environmental Office. Discharge of hazardous substances will not be permitted under any circumstances. Use sediment control BMPs to prevent construction site runoff from directly entering any storm drain or surface waters.

If the construction dewatering is noted or suspected of being contaminated, it may only be released to the storm drain system if the discharge is specifically permitted. Obtain authorization for any contaminated groundwater release in advance from the Installation Environmental Officer and the federal or state authority, as applicable. Discharge of hazardous substances will not be permitted under any circumstances.

Dewatering operation in the vicinity of Sta. 191+00 to Sta 194+00 shall be delayed as long as possible as to minimize the duration of stress on the trees before the rainy season starts.

3.3.2 Waters of the United States

Do not enter, disturb, destroy, or allow discharge of contaminants into waters of the United States, except as authorized herein. The protection of waters of the United States shown on the drawings in accordance with paragraph LICENSES AND PERMITS is the Contractor's responsibility. Authorization to enter specific waters of the United States identified does not relieve the Contractor from any obligation to protect other waters of the United States within, adjacent to, or in the vicinity of the construction site and associated boundaries.

3.4 PROTECTION OF CULTURAL RESOURCES

3.4.1 Archaeological Resources

Existing archaeological resources within the work area are shown on the drawings. Protect these resources and be responsible for their preservation during the life of the Contract. If, during excavation or other construction activities, any previously unidentified or unanticipated historical, archaeological, and cultural resources are discovered or found, activities that may damage or alter such resources will be suspended. Resources covered by this paragraph include, but are not limited to: any human skeletal remains or burials; artifacts; shell, midden, bone, charcoal, or other deposits; rock or coral alignments, pavings, wall, or other constructed features; and any indication of agricultural or other human activities. Upon such discovery or find, immediately notify the Contracting Officer so that the appropriate authorities may be notified and a determination made as to their significance and what, if any, special disposition of the finds should be made. Cease all activities that may result in impact to or the destruction of these resources. Secure the area and prevent employees or other persons from trespassing on, removing, or otherwise disturbing such resources. The Government retains ownership and control over archaeological resources.

3.4.2 Historical Resources

Existing historical resources within the work area are shown on the drawings. Protect these resources and be responsible for their preservation during the life of the Contract.

CONFORMED

3.5 AIR RESOURCES

Equipment operation, activities, or processes will be in accordance with 40 CFR 64 and state air emission and performance laws and standards.

3.5.1 Preconstruction Air Permits

Notify the Air Program Manager prior to bringing equipment, assembled or unassembled, onto the Installation, so that air permits can be secured. Necessary permitting time must be considered in regard to construction activities. Clean Air Act (CAA) permits must be obtained prior to bringing equipment, assembled or unassembled, onto the Installation.

3.5.2 Oil or Dual-fuel Boilers and Furnaces

Provide product data and details for new, replacement, or relocated fuel fired boilers, heaters, or furnaces to the Installation Environmental Office (Air Program Manager) through the Contracting Officer. Data to be reported include: equipment purpose (water heater, building heat, process), manufacturer, model number, serial number, fuel type (oil type, gas type) size (MMBTU heat input). Provide in accordance with paragraph PRECONSTRUCTION AIR PERMITS.

3.5.3 Burning

Burning is prohibited on the Government premises.

3.5.4 Class I and II ODS Prohibition

Class I and II ODS are Government property and must be returned to the Government for appropriate management. Coordinate with the Installation Environmental Office to determine the appropriate location for turn in of all reclaimed refrigerant.

3.5.5 Accidental Venting of Refrigerant

Accidental venting of a refrigerant is a release and must be reported immediately to the Contracting Officer.

3.5.6 EPA Certification Requirements

Heating and air conditioning technicians must be certified through an EPA-approved program. Maintain copies of certifications at the employees' places of business; technicians must carry certification wallet cards, as provided by environmental law.

3.5.7 Dust Control

The Contractor shall comply with all requirements listed within Air Resources subsection of Section 01 57 20.00 10.

Keep dust down at all times, including during nonworking periods. Sprinkle or treat, with dust suppressants, the soil at the site, haul roads, and other areas disturbed by operations. Dry power brooming will not be permitted. Instead, use vacuuming, wet mopping, wet sweeping, or wet power brooming. Air blowing will be permitted only for cleaning nonparticulate debris such as steel reinforcing bars. Only wet cutting will be permitted for cutting concrete blocks, concrete, and bituminous concrete. Do not unnecessarily shake bags of cement, concrete mortar, or plaster.

CONFORMED

3.5.7.1 Particulates

Dust particles, aerosols and gaseous by-products from construction activities, and processing and preparation of materials (such as from asphaltic batch plants) must be controlled at all times, including weekends, holidays, and hours when work is not in progress. Maintain excavations, stockpiles, haul roads, permanent and temporary access roads, plant sites, spoil areas, borrow areas, and other work areas within or outside the project boundaries free from particulates that would exceed 40 CFR 50, state, and local air pollution standards or that would cause a hazard or a nuisance. Sprinkling, chemical treatment of an approved type, baghouse, scrubbers, electrostatic precipitators, or other methods will be permitted to control particulates in the work area. Sprinkling, to be efficient, must be repeated to keep the disturbed area damp. Provide sufficient, competent equipment available to accomplish these tasks. Perform particulate control as the work proceeds and whenever a particulate nuisance or hazard occurs. Comply with state and local visibility regulations.

3.5.7.2 Abrasive Blasting

Blasting operations cannot be performed without prior approval of the Installation Air Program Manager. The use of silica sand is prohibited in sandblasting.

Provide tarpaulin drop cloths and windscreens to enclose abrasive blasting operations to confine and collect dust, abrasive agent, paint chips, and other debris. Perform work involving removal of hazardous material in accordance with 29 CFR 1910.

3.5.8 Odors

Control odors from construction activities. The odors must be in compliance with state regulations and local ordinances and may not constitute a health hazard.

3.6 WASTE MINIMIZATION

Minimize the use of hazardous materials and the generation of waste. Include procedures for pollution prevention/ hazardous waste minimization in the Hazardous Waste Management Section of the EPP. Obtain a copy of the installation's Pollution Prevention/Hazardous Waste Minimization Plan for reference material when preparing this part of the EPP. If no written plan exists, obtain information by contacting the Contracting Officer. Describe the anticipated types of the hazardous materials to be used in the construction when requesting information.

3.6.1 Salvage, Reuse and Recycle

Identify anticipated materials and waste for salvage, reuse, and recycling. Describe actions to promote material reuse, resale or recycling. To the extent practicable, all scrap metal must be sent for reuse or recycling and will not be disposed of in a landfill.

Include the name, physical address, and telephone number of the hauler, if transported by a franchised solid waste hauler. Include the destination and, unless exempted, provide a copy of the state or local permit (cover) or license for recycling.

CONFORMED

3.6.2 Nonhazardous Solid Waste Diversion Report

Maintain an inventory of nonhazardous solid waste diversion and disposal of construction and demolition debris. Submit a report to the Contracting Officer on the first working day after each fiscal year quarter, starting the first quarter that nonhazardous solid waste has been generated. Include the following in the report:

Construction and Demolition (C&D) Debris Disposed	[_____] [cubic yards][tons],[cubic meters] as appropriate
C&D Debris Recycled	[_____] [cubic yards][tons],[cubic meters] as appropriate
Total C&D Debris Generated	[_____] [cubic yards][tons],[cubic meters] as appropriate
Waste Sent to Waste-To-Energy Incineration Plant (This amount should not be included in the recycled amount)	[_____] [cubic yards][tons],[cubic meters] as appropriate

3.7 WASTE MANAGEMENT AND DISPOSAL

3.7.1 Waste Determination Documentation

Complete a Waste Determination form (provided at the pre-construction conference) for Contractor-derived wastes to be generated. All potentially hazardous solid waste streams that are not subject to a specific exclusion or exemption from the hazardous waste regulations (e.g. scrap metal, domestic sewage) or subject to special rules, (lead-acid batteries and precious metals) must be characterized in accordance with the requirements of 40 CFR 261 or corresponding applicable state or local regulations. Base waste determination on user knowledge of the processes and materials used, and analytical data when necessary. Consult with the Installation environmental staff for guidance on specific requirements. Attach support documentation to the Waste Determination form. As a minimum, provide a Waste Determination form for the following waste (this listing is not inclusive): oil- and latex-based painting and caulking products, solvents, adhesives, aerosols, petroleum products, and containers of the original materials.

3.7.2 Solid Waste Management

3.7.2.1 Solid Waste Management Report

Provide copies of the waste handling facilities' weight tickets, receipts, bills of sale, and other sales documentation. In lieu of sales documentation, a statement indicating the disposal location for the solid waste that is signed by an employee authorized to legally obligate or bind the firm may be submitted. The sales documentation Contractor certification must include the receiver's tax identification number and business, EPA or state registration number, along with the receiver's delivery and business addresses and telephone numbers. For each solid waste retained for the Contractor's own use, submit the information previously described in this

CONFORMED

paragraph on the solid waste disposal report. Prices paid or received do not have to be reported to the Contracting Officer unless required by other provisions or specifications of this Contract or public law.

3.7.2.2 Control and Management of Solid Wastes

Pick up solid wastes, and place in covered containers that are regularly emptied. Do not prepare or cook food on the project site. Prevent contamination of the site or other areas when handling and disposing of wastes. At project completion, leave the areas clean. Employ segregation measures so that no hazardous or toxic waste will become co-mingled with non-hazardous solid waste. Transport solid waste off Government property and dispose of it in compliance with 40 CFR 260, state, and local requirements for solid waste disposal. A Subtitle D RCRA permitted landfill is the minimum acceptable offsite solid waste disposal option. Verify that the selected transporters and disposal facilities have the necessary permits and licenses to operate. Solid waste disposal offsite must comply with most stringent local, state, and federal requirements, including 40 CFR 241, 40 CFR 243, and 40 CFR 258.

Manage hazardous material used in construction, including but not limited to, aerosol cans, waste paint, cleaning solvents, contaminated brushes, and used rags, in accordance with 49 CFR 173.

3.7.3 Control and Management of Hazardous Waste

Do not dispose of hazardous waste on Government property. Do not discharge any waste to a sanitary sewer, storm drain, or to surface waters or conduct waste treatment or disposal on Government property without written approval of the Contracting Officer.

3.7.3.1 Hazardous Waste/Debris Management

Identify construction activities that will generate hazardous waste or debris. Provide a documented waste determination for resultant waste streams. Identify, label, handle, store, and dispose of hazardous waste or debris in accordance with federal, state, and local regulations, including 40 CFR 261, 40 CFR 262, 40 CFR 263, 40 CFR 264, 40 CFR 265, 40 CFR 266, and 40 CFR 268.

Manage hazardous waste in accordance with the approved Hazardous Waste Management Section of the EPP. Store hazardous wastes in approved containers in accordance with 49 CFR 173 and 49 CFR 178. Hazardous waste generated within the confines of Government facilities is identified as being generated by the Government. Prior to removal of any hazardous waste from Government property, hazardous waste manifests must be signed by personnel from the Installation Environmental Office. Do not bring hazardous waste onto Government property. Provide the Contracting Officer with a copy of waste determination documentation for any solid waste streams that have any potential to be hazardous waste or contain any chemical constituents listed in 40 CFR 372-SUBPART D.

3.7.3.2 Waste Storage/Satellite Accumulation/90 Day Storage Areas

Accumulate hazardous waste at satellite accumulation points and in compliance with 40 CFR 262.34 and applicable state or local regulations. Individual waste streams will be limited to 55 gallons of accumulation (or 1 quart for acutely hazardous wastes). If the Contractor expects to generate hazardous waste at a rate and quantity that makes satellite

CONFORMED

accumulation impractical, the Contractor may request a temporary 90 day accumulation point be established. Submit a request in writing to the Contracting Officer and provide the following information (Attach Site Plan to the Request):

Contract Number	[_____]
Contractor	[_____]
Haz/Waste or Regulated Waste POC	[_____]
Phone Number	[_____]
Type of Waste	[_____]
Source of Waste	[_____]
Emergency POC	[_____]
Phone Number	[_____]
Location of the Site	[_____]

Attach a Waste Determination form for the expected waste streams. Allow 10 working days for processing this request. Additional compliance requirements (e.g. training and contingency planning) that may be required are the responsibility of the Contractor. Barricade the designated area where waste is being stored and post a sign identifying as follows:

"DANGER - UNAUTHORIZED PERSONNEL KEEP OUT"

3.7.3.3 Hazardous Waste Disposal

3.7.3.3.1 Responsibilities for Contractor's Disposal

Provide hazardous waste manifest to the Installations Environmental Office for review, approval, and signature prior to shipping waste off Government property.

3.7.3.3.1.1 Services

Provide service necessary for the final treatment or disposal of the hazardous material or waste in accordance with 40 CFR 260, local, and state, laws and regulations, and the terms and conditions of the Contract within 60 days after the materials have been generated. These services include necessary personnel, labor, transportation, packaging, detailed analysis (if required for disposal or transportation, include manifesting or complete waste profile sheets, equipment, and compile documentation).

3.7.3.3.1.2 Samples

Obtain a representative sample of the material generated for each job done to provide waste stream determination.

3.7.3.3.1.3 Analysis

Analyze each sample taken and provide analytical results to the Contracting Officer. See paragraph WASTE DETERMINATION DOCUMENTATION.

CONFORMED

3.7.3.3.1.4 Labeling

Determine the Department of Transportation's (DOT's) proper shipping names for waste (each container requiring disposal) and demonstrate to the Contracting Officer how this determination is developed and supported by the sampling and analysis requirements contained herein. Label all containers of hazardous waste with the words "Hazardous Waste" or other words to describe the contents of the container in accordance with 40 CFR 262.31 and applicable state or local regulations.

3.7.3.4 Universal Waste Management

Manage the following categories of universal waste in accordance with federal, state, and local requirements and installation instructions:

a. Batteries as described in 40 CFR 273.2

b. Lamps as described in 40 CFR 273.5

c. Mercury-containing equipment as described in 40 CFR 273.4

Mercury is prohibited in the construction of this facility, unless specified otherwise, and with the exception of mercury vapor lamps and fluorescent lamps. Dumping of mercury-containing materials and devices such as mercury vapor lamps, fluorescent lamps, and mercury switches, in rubbish containers is prohibited. Remove without breaking, pack to prevent breakage, and transport out of the activity in an unbroken condition for disposal as directed.

3.7.3.5 Electronics End-of-Life Management

Recycle or dispose of electronics waste, including, but not limited to, used electronic devices such computers, monitors, hard-copy devices, televisions, mobile devices, in accordance with 40 CFR 260-262, state, and local requirements, and installation instructions.

3.7.3.6 Disposal Documentation for Hazardous and Regulated Waste

Contact the Contracting Officer for the facility RCRA identification number that is to be used on each manifest.

Submit a copy of the applicable EPA and or state permit(s), manifest(s), or license(s) for transportation, treatment, storage, and disposal of hazardous and regulated waste by permitted facilities. Hazardous or toxic waste manifests must be reviewed, signed, and approved by the Contracting Officer before the Contractor may ship waste. To obtain specific disposal instructions, coordinate with the Installation Environmental Office.

3.7.4 Releases/Spills of Oil and Hazardous Substances

3.7.4.1 Response and Notifications

Exercise due diligence to prevent, contain, and respond to spills of hazardous material, hazardous substances, hazardous waste, sewage, regulated gas, petroleum, lubrication oil, and other substances regulated in accordance with 40 CFR 300. Maintain spill cleanup equipment and materials at the work site. In the event of a spill, take prompt, effective action to stop, contain, curtail, or otherwise limit the amount,

CONFORMED

duration, and severity of the spill/release. In the event of any releases of oil and hazardous substances, chemicals, or gases; immediately (within 15 minutes) notify the Installation Fire Department, the Installation Command Duty Officer, the Installation Environmental Office, the Contracting Officer and the state or local authority.

Submit verbal and written notifications as required by the federal (40 CFR 300.125 and 40 CFR 355), state, local regulations and instructions. Provide copies of the written notification and documentation that a verbal notification was made within 20 days. Spill response must be in accordance with 40 CFR 300 and applicable state and local regulations. Contain and clean up these spills without cost to the Government.

3.7.4.2 Clean Up

Clean up hazardous and non-hazardous waste spills. Reimburse the Government for costs incurred including sample analysis materials, clothing, equipment, and labor if the Government will initiate its own spill cleanup procedures, for Contractor- responsible spills, when: Spill cleanup procedures have not begun within one hour of spill discovery/occurrence; or, in the Government's judgment, spill cleanup is inadequate and the spill remains a threat to human health or the environment.

3.7.5 Mercury Materials

Immediately report to the Environmental Office and the Contracting Officer instances of breakage or mercury spillage. Clean mercury spill area to the satisfaction of the Contracting Officer.

Do not recycle a mercury spill cleanup; manage it as a hazardous waste for disposal.

3.7.6 Wastewater

3.7.6.1 Disposal of wastewater must be as specified below.

3.7.6.1.1 Treatment

Do not allow wastewater from construction activities, such as onsite material processing, concrete curing, foundation and concrete clean-up, water used in concrete trucks, and forms to enter water ways or to be discharged prior to being treated to remove pollutants. Dispose of the construction- related waste water off-Government property in accordance with 40 CFR 403, state, regional, and local laws and regulations.

3.7.6.1.2 Surface Discharge

For discharge of ground water, obtain a state or federal permit specific for pumping and discharging ground water prior to surface discharging. Surface discharge in accordance with federal, state, and local laws and regulations.

3.7.6.1.3 Land Application

Water generated from the flushing of lines after disinfection or disinfection in conjunction with hydrostatic testing must be land- applied in accordance with federal, state, and local laws and regulations for land application.

CONFORMED

3.8 HAZARDOUS MATERIAL MANAGEMENT

Include hazardous material control procedures in the Safety Plan, in accordance with Section 01 35 26 GOVERNMENTAL SAFETY REQUIREMENTS. Address procedures and proper handling of hazardous materials, including the appropriate transportation requirements. Do not bring hazardous material onto Government property that does not directly relate to requirements for the performance of this contract. Submit an SDS and estimated quantities to be used for each hazardous material to the Contracting Officer prior to bringing the material on the installation. Typical materials requiring SDS and quantity reporting include, but are not limited to, oil and latex based painting and caulking products, solvents, adhesives, aerosol, and petroleum products. Use hazardous materials in a manner that minimizes the amount of hazardous waste generated. Containers of hazardous materials must have National Fire Protection Association labels or their equivalent. Certify that hazardous materials removed from the site are hazardous materials and do not meet the definition of hazardous waste, in accordance with 40 CFR 261.

3.9 PREVIOUSLY USED EQUIPMENT

Clean previously used construction equipment prior to bringing it onto the project site. Equipment must be free from soil residuals, egg deposits from plant pests, noxious weeds, and plant seeds. Consult with the U.S. Department of Agriculture jurisdictional office for additional cleaning requirements.

3.10 CONTROL AND MANAGEMENT OF LEAD-BASED PAINT (LBP)

Manage and dispose of lead-contaminated waste in accordance with 40 CFR 745. Manifest any lead-contaminated waste and provide the manifest to the Contracting Officer.

3.11 CONTROL AND MANAGEMENT OF POLYCHLORINATED BIPHENYLS (PCBS)

Manage and dispose of PCB-contaminated waste in accordance with 40 CFR 761.

3.12 CONTROL AND MANAGEMENT OF LIGHTING BALLAST AND LAMPS CONTAINING PCBS

Manage and dispose of contaminated waste in accordance with 40 CFR 761.

3.13 PETROLEUM, OIL, LUBRICANT (POL) STORAGE AND FUELING

POL products include flammable or combustible liquids, such as gasoline, diesel, lubricating oil, used engine oil, hydraulic oil, mineral oil, and cooking oil. Store POL products and fuel equipment and motor vehicles in a manner that affords the maximum protection against spills into the environment. Manage and store POL products in accordance with EPA 40 CFR 112, and other federal, state, regional, and local laws and regulations. Use secondary containments, dikes, curbs, and other barriers, to prevent POL products from spilling and entering the ground, storm or sewer drains, stormwater ditches or canals, or navigable waters of the United States. Describe in the EPP (see paragraph ENVIRONMENTAL PROTECTION PLAN) how POL tanks and containers must be stored, managed, and inspected and what protections must be provided. Storage of oil, including fuel, on the project site is not allowed. Fuel must be brought to the project site each day that work is performed.

CONFORMED

3.13.1 Used Oil Management

Manage used oil generated on site in accordance with 40 CFR 279. Determine if any used oil generated while onsite exhibits a characteristic of hazardous waste. Used oil containing 1,000 parts per million of solvents is considered a hazardous waste and disposed of at the Contractor's expense. Used oil mixed with a hazardous waste is also considered a hazardous waste. Dispose in accordance with paragraph HAZARDOUS WASTE DISPOSAL.

3.13.2 Oil Storage Including Fuel Tanks

Provide secondary containment and overfill protection for oil storage tanks. A berm used to provide secondary containment must be of sufficient size and strength to contain the contents of the tanks plus 5 inches freeboard for precipitation. Construct the berm to be impervious to oil for 72 hours that no discharge will permeate, drain, infiltrate, or otherwise escape before cleanup occurs. Use drip pans during oil transfer operations; adequate absorbent material must be onsite to clean up any spills and prevent releases to the environment. Cover tanks and drip pans during inclement weather. Provide procedures and equipment to prevent overfilling of tanks. If tanks and containers with an aggregate aboveground capacity greater than 1320 gallons will be used onsite (only containers with a capacity of 55 gallons or greater are counted), provide and implement a SPCC plan meeting the requirements of 40 CFR 112. Do not bring underground storage tanks to the installation for Contractor use during a project. Submit the SPCC plan to the Contracting Officer for approval.

Monitor and remove any rainwater that accumulates in open containment dikes or berms. Inspect the accumulated rainwater prior to draining from a containment dike to the environment, to determine there is no oil sheen present.

3.14 INADVERTENT DISCOVERY OF PETROLEUM-CONTAMINATED SOIL OR HAZARDOUS WASTES

If petroleum-contaminated soil, or suspected hazardous waste is found during construction that was not identified in the Contract documents, immediately notify the Contracting Officer. Do not disturb this material until authorized by the Contracting Officer. Once authorized by the contracting officer, the petroleum contaminated soil or suspected hazardous waste shall be stockpiled at the designated on-site areas.

3.15 CHLORDANE

Evaluate excess soils and concrete foundation debris generated during the demolition of housing units or other wooden structures for the presence of chlordane or other pesticides prior to reuse or final disposal.

3.16 SOUND INTRUSION

Make the maximum use of low-noise emission products, as certified by the EPA. Blasting or use of explosives are not permitted 8 a.m. and 4 p.m., Monday through Friday, exclusive of holidays, unless otherwise specified.

Keep construction activities under surveillance and control to minimize environment damage by noise. Comply with the provisions of the State of California rules.

CONFORMED

3.17 POST CONSTRUCTION CLEANUP

Clean up areas used for construction in accordance with Contract Clause: "Cleaning Up". Unless otherwise instructed in writing by the Contracting Officer, remove traces of temporary construction facilities such as haul roads, work area, structures, foundations of temporary structures, stockpiles of excess or waste materials, and other vestiges of construction prior to final acceptance of the work. Grade parking area and similar temporarily used areas to conform with surrounding contours.

-- End of Section --

CONFORMED

SECTION TABLE OF CONTENTS

DIVISION 01 - GENERAL REQUIREMENTS

SECTION 01 57 20.00 10

ENVIRONMENTAL PROTECTION

04/06

PART 1 GENERAL

1.1 REFERENCES
1.2 DEFINITIONS
1.2.1 Legally Responsible Person
1.2.2 Environmental Pollution and Damage
1.2.3 Environmental Protection
1.2.4 Contractor Generated Hazardous Waste
1.2.5 Land Application for Discharge Water
1.2.6 Pesticide and Herbicides
1.2.7 Pests
1.2.8 Surface Discharge
1.2.9 Waters of the United States
1.2.10 Wetlands
1.3 GENERAL REQUIREMENTS
1.4 Mitigation, Monitoring and Reporting Program
1.5 SUBCONTRACTORS
1.6 PAYMENT
1.7 SUBMITTALS
1.8 RAIN EVENT ACTION PLAN
1.9 ENVIRONMENTAL PROTECTION PLAN
1.9.1 Compliance
1.9.2 Contents
1.9.3 Appendix
1.10 PROTECTION FEATURES
1.11 SPECIAL ENVIRONMENTAL REQUIREMENTS
1.12 ENVIRONMENTAL ASSESSMENT OF CONTRACT DEVIATIONS
1.13 NOTIFICATION

PART 2 PRODUCTS

PART 3 EXECUTION

3.1 ENVIRONMENTAL PERMITS AND COMMITMENTS
3.2 ARCHAEOLOGICAL SITE CA-SCL-593
3.3 LAND RESOURCES
3.3.1 Work Area Limits
3.3.2 Work Hour Limits
3.3.3 Landscape
3.3.4 Existing Trees Monitoring Report
3.3.5 Erosion and Sediment Controls
3.3.6 Contractor Facilities and Work Areas
3.4 WATER RESOURCES
3.4.1 Cofferdams, Diversions, and Dewatering Operations
3.4.2 Stream Crossings

CONFORMED

3.4.3 Impact of Concrete Near Waterways
3.5 AIR RESOURCES
3.5.1 Particulates
3.5.2 Dust Emission Reduction
3.5.3 Construction Equipment Emission Reduction
3.5.4 Odors
3.5.5 Sound Intrusions
3.5.6 Noise Suppression Techniques
3.5.7 Burning
3.6 TRANSPORTATION MANAGEMENT PLAN
3.7 CHEMICAL MATERIALS MANAGEMENT AND WASTE DISPOSAL
3.7.1 Solid Wastes
3.7.2 Chemicals and Chemical Wastes
3.7.3 Contractor Generated Hazardous Wastes/Excess Hazardous Materials
3.7.4 Fuel and Lubricants
3.7.5 Waste Water
3.8 RECYCLING AND WASTE MINIMIZATION
3.9 NON-HAZARDOUS SOLID WASTE DIVERSION REPORT
3.10 BIOLOGICAL RESOURCES
3.10.1 Protection of Wildlife
3.11 PREVIOUSLY USED EQUIPMENT
3.12 MAINTENANCE OF POLLUTION FACILITIES
3.13 TRAINING OF CONTRACTOR PERSONNEL
3.14 POST CONSTRUCTION CLEANUP

ATTACHMENTS:

CWA Section 401 WQC permit

-- End of Section Table of Contents --

CONFORMED

SECTION 01 57 20.00 10

ENVIRONMENTAL PROTECTION
04/06

PART 1 GENERAL

1.1 REFERENCES

The publications listed below form a part of this specification to the extent referenced. The publications are referred to within the text by the basic designation only.

U.S. ARMY (DA)

DA AR 200-5	(1999) Pest Management

U.S. ARMY CORPS OF ENGINEERS (USACE)

EM 385-1-1	(2014) Safety and Health Requirements Manual
WETLANDS DELINEATION MANUAL	(1987) Corps of Engineers Wetlands Delineation Manual

U.S. NATIONAL ARCHIVES AND RECORDS ADMINISTRATION (NARA)

33 CFR 328	Definitions of Waters of the United States
40 CFR 261	Identification and Listing of Hazardous Waste
40 CFR 262	Standards Applicable to Generators of Hazardous Waste
40 CFR 279	Standards for the Management of Used Oil
40 CFR 302	Designation, Reportable Quantities, and Notification
40 CFR 355	Emergency Planning and Notification
40 CFR 68	Chemical Accident Prevention Provisions
49 CFR 171 - 178	Hazardous Materials Regulations

1.2 DEFINITIONS

1.2.1 Legally Responsible Person

The Contractor shall be the Legally Responsible Person for compliance to the Construction General Permit and to prepare, obtain approval, and updates of a Storm Water Pollution Prevention Plan (SWPPP).

CONFORMED

1.2.2 Environmental Pollution and Damage

Environmental pollution and damage is the presence of chemical, physical, or biological elements or agents which adversely affect human health or welfare; unfavorably alter ecological balances of importance to human life; affect other species of importance to humankind; or degrade the environment aesthetically, culturally and/or historically.

1.2.3 Environmental Protection

Environmental protection is the prevention/control of pollution and habitat disruption that may occur to the environment during construction. The control of environmental pollution and damage requires consideration of land, water, and air; biological and cultural resources; and includes management of visual aesthetics; noise; solid, chemical, gaseous, and liquid waste; radiant energy and radioactive material as well as other pollutants.

1.2.4 Contractor Generated Hazardous Waste

Contractor generated hazardous waste means materials that, if abandoned or disposed of, may meet the definition of a hazardous waste. These waste streams would typically consist of material brought on site by the Contractor to execute work, but are not fully consumed during the course of construction. Examples include, but are not limited to, excess paint thinners (i.e. methyl ethyl ketone, toluene etc.), waste thinners, excess paints, excess solvents, waste solvents, and excess pesticides, and contaminated pesticide equipment rinse water, and all herbicides.

1.2.5 Land Application for Discharge Water

The term "Land Application" for discharge water implies that the Contractor must discharge water at a rate which allows the water to percolate into the soil. No sheeting action, soil erosion, discharge into storm sewers, discharge into defined drainage areas, or discharge into the "waters of the United States" must occur. Land Application must be in compliance with all applicable Federal, State, and local laws and regulations.

1.2.6 Pesticide and Herbicides

Pesticide is defined as any substance or mixture of substances intended for preventing, destroying, repelling, or mitigating any pest, or intended for use as a plant regulator, defoliant or desiccant. Herbicides are plant/weed killers.

1.2.7 Pests

The term "pests" means arthropods, birds, rodents, nematodes, fungi, bacteria, viruses, algae, snails, marine borers, snakes, weeds and other organisms (except for human or animal disease-causing organisms) that adversely affect readiness, military operations, or the well-being of personnel and animals; attack or damage real property, supplies, equipment, or vegetation; or are otherwise undesirable.

1.2.8 Surface Discharge

The term "Surface Discharge" implies that the water is discharged with possible sheeting action and subsequent soil erosion may occur. Waters that are surface discharged may terminate in drainage ditches, storm

CONFORMED

sewers, creeks, and/or "waters of the United States" and would require a permit to discharge water from the governing agency.

1.2.9 Waters of the United States

All waters which are under the jurisdiction of the Clean Water Act, as defined in 33 CFR 328.

1.2.10 Wetlands

Those areas that are inundated or saturated by surface or ground water at a frequency and duration sufficient to support, and that under normal circumstances do support, a prevalence of vegetation typically adapted for life in saturated soil conditions. Wetlands generally include swamps, marshes, and bogs. Official determination of whether or not an area is classified as a wetland must be done in accordance with WETLANDS DELINEATION MANUAL.

1.3 GENERAL REQUIREMENTS

Minimize environmental pollution and damage that may occur as the result of construction operations. The environmental resources within the project boundaries and those affected outside the limits of permanent work must be protected during the entire duration of this contract. Comply with all applicable environmental Federal, State, and local laws and regulations. Any delays resulting from failure to comply with environmental laws and regulations will be the Contractor's responsibility and provide pollution prevention measures associated with any construction activity in accordance with the most recent version of the Construction General Permit and the RWQCB Order.

1.4 Mitigation, Monitoring and Reporting Program

The Mitigation, Monitoring and Reporting Program (MMRP) has been prepared pursuant to the California Environmental Quality Act (CEQA) and the State CEQA Guidelines. It provides for the monitoring of mitigation measures required of the Santa Clara Valley Water District (District) in the Upper Berryessa Creek Flood Risk Management Project (proposed project), as set forth in the Environmental Impact Report (EIR). A copy of the MMRP is available at the Santa Clara Valley Water District.

The Contractor shall ensure that all applicable mitigation measures are implemented and completed according to schedule and maintained in a satisfactory manner throughout the construction.

1.5 SUBCONTRACTORS

Ensure compliance with this section by subcontractors.

1.6 PAYMENT

No separate payment will be made for work covered under this section. Payment of fees associated with environmental permits, application, and/or notices obtained by the Contractor, and payment of all fines/fees for violation or non-compliance with Federal, State, Regional and local laws and regulations are the Contractor's responsibility. All costs associated with this section must be included in the contract price.

CONFORMED

1.7 SUBMITTALS

Government approval is required for submittals with a "G" designation; submittals not having a "G" designation are for information only. When used, a designation following the "G" designation identifies the office that will review the submittal for the Government. Submit the following in accordance with Section 01 33 00 SUBMITTAL PROCEDURES:

SD-01 Preconstruction Submittals

Environmental Protection Plan; G
Nesting Bird Surveys; G
Transportation Management Plan; G
Rain Event Action Plan; G

SD-06 Test Reports

Trees Monitoring Report; G

1.8 RAIN EVENT ACTION PLAN

In-channel construction activities would be suspended and a project-specific Rain Event Action Plan (REAP) would be implemented if substantial rainfall, defined as 0.5 inch or greater precipitation, is forecast by the National Weather Service in their 24-hour forecast for the project area. The REAP would be prepared by a qualified SWPPP practitioner and would comply with standards of the California Stormwater Quality Association Best Management Practices Handbook. The REAP would include measures to prevent adverse effects of water flows at construction areas, such as removal of equipment, vehicles, and materials from the channel; protection of exposed and disturbed areas; and isolation of uncured concrete from water flows. Additionally, start of construction phases taking more than 72 hours to complete would not occur if substantial rainfall is forecast.

1.9 ENVIRONMENTAL PROTECTION PLAN

Prior to commencing construction activities or delivery of materials to the site, submit an Environmental Protection Plan for review and approval by the Contracting Officer. The purpose of the Environmental Protection Plan is to present a comprehensive overview of known or potential environmental issues which the Contractor must address during construction. Issues of concern must be defined within the Environmental Protection Plan as outlined in this section. Address each topic at a level of detail commensurate with the environmental issue and required construction task(s). Topics or issues which are not identified in this section, but are considered necessary, must be identified and discussed after those items formally identified in this section. Prior to submittal of the Environmental Protection Plan, meet with the Contracting Officer for the purpose of discussing the implementation of the initial Environmental Protection Plan; possible subsequent additions and revisions to the plan including any reporting requirements; and methods for administration of the Contractor's Environmental Plans. The Environmental Protection Plan must be current and maintained onsite by the Contractor.

1.9.1 Compliance

No requirement in this Section will relieve the Contractor of any applicable Federal, State, and local environmental protection laws and

CONFORMED

regulations. During Construction, the Contractor will be responsible for identifying, implementing, and submitting for approval any additional requirements to be included in the Environmental Protection Plan.

1.9.2 Contents

Include in the environmental protection plan, but not limit it to, the following:

a. Name(s) of person(s) within the Contractor's organization who is (are) responsible for ensuring adherence to the Environmental Protection Plan.

b. Name(s) and qualifications of person(s) responsible for manifesting hazardous waste to be removed from the site, if applicable.

c. Name(s) and qualifications of person(s) responsible for training the Contractor's environmental protection personnel.

d. Description of the Contractor's environmental protection personnel training program.

e. An erosion and sediment control plan which identifies the type and location of the erosion and sediment controls to be provided. The plan must include monitoring and reporting requirements to assure that the control measures are in compliance with the erosion and sediment control plan, Federal, State, and local laws and regulations. A Storm Water Pollution Prevention Plan (SWPPP) may be substituted for this plan. See Section 01 57 23 TEMPORARY STORM WATER POLLUTION CONTROL for SWPPP guidelines.

f. Drawings showing locations of proposed temporary excavations or embankments for haul roads, stream crossings, material storage areas, structures, sanitary facilities, and stockpiles of excess or spoil materials including methods to control runoff and to contain materials on the site.

g. Traffic control plans including measures to reduce erosion of temporary roadbeds by construction traffic, especially during wet weather. Plan shall include measures to minimize the amount of mud transported onto paved public roads by vehicles or runoff. Guidance for traffic control plans shall also be in compliance with the City of Milpitas, Santa Clara County, and the California Department of Transportation (Caltrans) criteria.

h. Work area plan showing the proposed activity in each portion of the area and identifying the areas of limited use or nonuse. Plan should include measures for marking the limits of use areas including methods for protection of features to be preserved within authorized work areas. Contractor must stay within project work area. There will be no dumping of fill or material outside of the project area or unless otherwise approved by the Contracting Officer in witting.

i. Drawing showing the location of borrow areas.

j. Include in the Spill Control plan the procedures, instructions, and reports to be used in the event of an unforeseen spill of a substance regulated by 40 CFR 68, 40 CFR 302, 40 CFR 355, and/or regulated under State or Local laws and regulations. The Spill Control Plan supplements the requirements of EM 385-1-1. Include in this plan, as a

CONFORMED

minimum:

(1) The name of the individual who will report any spills or hazardous substance releases and who will follow up with complete documentation. This individual will immediately notify the Contracting Officer and the local Fire Department in addition to the legally required Federal, State, and local reporting channels (including the National Response Center 1-800-424-8802) if a reportable quantity is released to the environment. Include in the plan a list of the required reporting channels and telephone numbers.

(2) The name and qualifications of the individual who will be responsible for implementing and supervising the containment and cleanup.

(3) Training requirements for Contractor's personnel and methods of accomplishing the training.

(4) A list of materials and equipment to be immediately available at the job site, tailored to cleanup work of the potential hazard(s) identified.

(5) The names and locations of suppliers of containment materials and locations of additional fuel oil recovery, cleanup, restoration, and material-placement equipment available in case of an unforeseen spill emergency.

(6) The methods and procedures to be used for expeditious contaminant cleanup.

k. A non-hazardous solid waste disposal plan identifying methods and locations for solid waste disposal including clearing debris and schedules for disposal.

(1) Identify any subcontractors responsible for the transportation and disposal of solid waste. Submit licenses or permits for solid waste disposal sites that are not a commercial operating facility.

(2) Evidence of the disposal facility's acceptance of the solid waste must be attached to this plan during the construction. Attach a copy of each of the Non-hazardous Solid Waste Diversion Reports to the disposal plan. Submit the report for the previous quarter on the first working day after the first quarter that non-hazardous solid waste has been disposed and/or diverted (e.g. the first working day of January, April, July, and October).

(3) Indicate in the report the total amount of waste generated and total amount of waste diverted in cubic yards or tons along with the percent that was diverted.

(4) A recycling and solid waste minimization plan with a list of measures to reduce consumption of energy and natural resources. Detail in the plan the Contractor's actions to comply with and to participate in Federal, State, Regional, and local government sponsored recycling programs to reduce the volume of solid waste at the source.

l. An air pollution control plan detailing provisions to assure that dust,

CONFORMED

debris, materials, trash, etc., do not become air borne and travel off the project site.

m. A contaminant prevention plan that: identifies potentially hazardous substances to be used on the job site; identifies the intended actions to prevent introduction of such materials into the air, water, or ground; and details provisions for compliance with Federal, State, and local laws and regulations for storage and handling of these materials. In accordance with EM 385-1-1, a copy of the Material Safety Data Sheets (MSDS) and the maximum quantity of each hazardous material to be onsite at any given time must be included in the contaminant prevention plan. Update the plan as new hazardous materials are brought onsite or removed from the site.

n. A waste water management plan that identifies the methods and procedures for management and/or discharge of waste waters which are directly derived from construction activities, such as concrete curing water, clean-up water, dewatering of ground water, disinfection water, hydrostatic test water, and water used in flushing of lines. If a settling/retention pond is required, the plan must include the design of the pond including drawings, removal plan, and testing requirements for possible pollutants. If land application will be the method of disposal for the waste water, the plan must include a sketch showing the location for land application along with a description of the pretreatment methods to be implemented. If surface discharge will be the method of disposal, include a copy of the permit and associated documents as an attachment prior to discharging the waste water. If disposal is to a sanitary sewer, the plan must include documentation that the Waste Water Treatment Plant Operator has approved the flow rate, volume, and type of discharge.

o. A historical, archaeological, cultural resources biological, resources and wetlands plan that defines procedures for identifying and protecting historical, archaeological, cultural resources, biological resources and wetlands known to be on the project site: and/or identifies procedures to be followed if historical archaeological, cultural resources, biological resources and wetlands not previously known to be onsite or in the area are discovered during construction. Include in the plan methods to assure the protection of known or discovered resources, identifying lines of communication between Contractor personnel and the Contracting Officer.

p. Include and update a pesticide treatment plan, as information becomes available. Include in the plan: sequence of treatment, dates, times, locations, pesticide trade name, EPA registration numbers, authorized uses, chemical composition, formulation, original and applied concentration, application rates of active ingredient (i.e. pounds of active ingredient applied), equipment used for application and calibration of equipment. Federal, State, Regional and Local pest management record keeping and reporting requirements as well as any additional Installation Project Office specific requirements are the Contractor's responsibility in conformance with DA AR 200-5 Pest Management, Chapter 2, Section III "Pest Management Records and Reports" for data required to be reported to the Installation.

1.9.3 Appendix

Attach to the Environmental Protection Plan, as an appendix, copies of all environmental permits, permit application packages, approvals to construct,

CONFORMED

notifications, certifications, reports, and termination documents.

1.10 PROTECTION FEATURES

This paragraph supplements the Contract Clause PROTECTION OF EXISTING VEGETATION, STRUCTURES, EQUIPMENT, UTILITIES, AND IMPROVEMENTS. Prior to start of any onsite construction activities, the Contractor and the Contracting Officer will make a joint condition survey. Immediately following the survey, the Contractor will prepare a brief report including a plan describing the features requiring protection under the provisions of the Contract Clauses, which are not specifically identified on the drawings as environmental features requiring protection along with the condition of trees, shrubs and grassed areas immediately adjacent to the site of work and adjacent to the Contractor's assigned storage area and access route(s), as applicable. This survey report will be signed by both the Contractor and the Contracting Officer upon mutual agreement as to its accuracy and completeness. The Contractor must protect those environmental features included in the survey report and any indicated on the drawings, regardless of interference which their preservation may cause to the work under the contract.

1.11 SPECIAL ENVIRONMENTAL REQUIREMENTS

Comply with the special environmental requirements listed within this section (01 57 20.00 10) as well as any appendices attached including but not limited to the Rain Event Action Plan, Archaeological Monitoring Plan, and the Groundwater Management Plan.

1.12 ENVIRONMENTAL ASSESSMENT OF CONTRACT DEVIATIONS

Any deviations from the drawings, plans and specifications, requested by the Contractor and which may have an environmental impact, will be subject to approval by the Contracting Officer and may require an extended review, processing, and approval time. The Contracting Officer reserves the right to disapprove alternate methods, even if they are more cost effective, if the Contracting Officer determines that the proposed alternate method will have an adverse environmental impact.

1.13 NOTIFICATION

The Contracting Officer will notify the Contractor in writing of any observed noncompliance with Federal, State or local environmental laws or regulations, permits, and other elements of the Contractor's Environmental Protection plan. After receipt of such notice, the Contractor will inform the Contracting Officer of the proposed corrective action and take such action when approved by the Contracting Officer. The Contracting Officer may issue an order stopping all or part of the work until satisfactory corrective action has been taken. No time extensions will be granted or equitable adjustments allowed for any such suspensions. This is in addition to any other actions the Contracting Officer may take under the contract, or in accordance with the Federal Acquisition Regulation or Federal Law.

PART 2 PRODUCTS

NOT USED

CONFORMED

PART 3 EXECUTION

3.1 ENVIRONMENTAL PERMITS AND COMMITMENTS

This paragraph supplements the Contractor's responsibility under the contract clause "PERMITS AND RESPONSIBILITIES" to the extent that the Government has obtained the CWA Section 401 WQC permit.

3.2 ARCHAEOLOGICAL SITE CA-SCL-593

An archeological site CA-SCL-593 is located on the eastern and western banks of creek between Sta. 152+50 to 155+00, approximately. All channel work to be done at the site location shall be in accordance with the archaeological monitoring protocol and requirements described in the following paragraphs. See Appendix C, the Archaeological Monitoring Plan, included for reference.

The Contractor shall provide a professional and experienced archaeologist that meets the Secretary of the Interior's Standards for Archeology and Historic Preservation to perform the monitoring protocol during project construction (Department of the Interior, National Park Service: https://www.nps.gov/history/local-law/arch_stnds_9.htm). The Contractor shall submit the archaeologist's resume for Corps approval. The Contractor shall provide a Native American consultant to work with the archaeologist during monitoring, and also to perform the role of Most Likely Descendent (MLD) when human remains are unearthed and removed. The Corps previously removed human remains from CA-SCL-593, which was done in accordance with the guidelines and procedures of a Burial Treatment Plan.

The Contractor's archaeologist shall be the principle monitor, who shall be present on-site when any construction activities will occur within the archaeological site CA-SCL-593. During project mobilization and prior to commencing construction, the Contractor's archaeologist, Native American consultant, construction crew, and Corps archaeologist shall meet to clarify the monitoring protocol and to review the potential range of archaeological work that will be needed for various finds.

The Contractor shall arrange for unrestricted access for the archaeologist and the Native American consultant at CA-SCL-593 prior to and during the channel earth-disturbing activities to complete the monitoring. The Contractor's channel work shall be performed only when the archaeologist and the Native American are present and in accordance with the stipulations of the equipment operation and excavation methods.

The ways in which the channel widening and deepening shall be accomplished through CA-SCL-593 shall be specialized. For example, the thickness of bucket or blade cuts is reduced, and thus a smaller area exposure for the monitoring archaeologist to see and inspect. Also, the archaeologist will occasionally want to "pause" equipment without lengthy delays to get a closer look at soils for evidence of an archaeological feature. The Contractor will therefore perform the excavations at a lower production rate compared to the straightforward channel work elsewhere. This specialized approach will be limited initially to a trial period of 2 to 3 workdays, and the results reviewed by the Corps' archaeologist to decide whether to continue with the specialized methods, or modify the plan based upon the field observations.

The Contractor is advised that if cultural materials or features are identified during monitoring at site CA-SCL-593, which the archaeologist

CONFORMED

believes warrant a closer and controlled inspection, channel work shall be temporarily suspended or restricted within a 50-foot radius of the discovery location in order to complete an evaluation of significance and implement any removal actions. The Contractor shall commence channel work only when the proper protocols have been met and the Contractor is informed by the Contracting Officer to resume work (see Appendix C).

The Contractor's work in other portions of the project area (e.g., channel excavation in areas outside the boundaries of site CA-SCL-593) shall be subjected to periodic inspections by the archaeologist as a precautionary measure to check for the presence of archaeological resources currently buried and not visible on the ground surface.

The Contractor shall prepare a technical report, including a description of work methods employed, findings of the monitoring and excavations of features and Native American burials. The report shall have appropriate maps and photos and meet the requirements of archaeological reporting published by the Office of Historic Preservation. The collected archaeological materials shall be documented in the technical report with standard tables, graphs and catalogs. All information regarding cultural resources shall be kept confidential and will not be made available for public disclosure.

The Contractor shall submit a draft written report to the Corps, who shall coordinate review of it with the State Historic Preservation Officer as required. A final report shall be prepared by the Contractor, incorporating information based upon comments received, and also updating the California DPR 523 record of CA-SCL-593.

3.3 LAND RESOURCES

Confine all activities to areas defined by the drawings as temporary construction easement. Identify any land resources to be preserved within the work area prior to the beginning of any construction. Do not remove, cut, deface, injure, or destroy land resources including trees, shrubs, vines, grasses, topsoil, and land forms without approval, except in areas indicated on the drawings or specified to be cleared. Ropes, cables, or guys will not be fastened to or attached to any trees for anchorage unless specifically authorized. Provide effective protection for land and vegetation resources at all times, as defined in the following subparagraphs. Remove stone, soil, or other materials displaced into uncleared areas.

3.3.1 Work Area Limits

Mark the areas that need not be disturbed under this contract prior to commencing construction activities. Mark or fence isolated areas within the general work area which are not to be disturbed. Protect monuments and markers before construction operations commence. Where construction operations are to be conducted during darkness, any markers must be visible in the dark. The Contractor's personnel must be knowledgeable of the purpose for marking and/or protecting particular objects.

3.3.2 Work Hour Limits

Construction hours limits shall be in accordance with the requirements listed in Section 01 14 00 Work Restrictions.

CONFORMED

3.3.3 Landscape

Trees, shrubs, vines, grasses, land forms and other landscape features indicated and defined on the drawings to be preserved must be clearly identified by marking, fencing, or wrapping with boards, or any other approved techniques. Restore landscape features damaged or destroyed during construction operations outside the limits of the approved work area.

3.3.4 Existing Trees Monitoring Report

The Contractor shall provide an arborist who will defines procedures for identifying and protecting existing trees along the existing channel and shall be on-site during construction. The arborist shall attend a pre-construction meeting, periodic meetings of monitoring of trees, and shall prepare a report to document the progress and findings. A tree monitoring report shall be prepared and submitted to the Contracting officer no more than 7 days after the field visit or meetings.

The arborist shall have the following minimum qualifications:

a. Have an ISA Certified Arborist® credential

b. Five or more years of full-time practical work experience in arboriculture and/or a degree in the field of arboriculture, horticulture, landscape architecture, or forestry from a regionally accredited educational institute.

3.3.5 Erosion and Sediment Controls

Providing erosion and sediment control measures in accordance with Federal, State, and local laws and regulations is the Contractor's responsibility. Select and maintain the erosion and sediment controls such that water quality standards are not violated as a result of construction activities. The area of bare soil exposed at any one time by construction operations should be kept to a minimum. Construct or install temporary and permanent erosion and sediment control best management practices (BMP's) as specified in Section 01 57 23 TEMPORARY STORM WATER POLLUTION CONTROL. BMPs may include, but not be limited to, vegetation cover, stream bank stabilization, slope stabilization, silt fences, construction of terraces, interceptor channels, sediment traps, inlet and outfall protection, diversion channels, and sedimentation basins. The Contractor's best management practices must also be in accordance with the California Stormwater Quality Association (CASQA) requirements, Storm Water Pollution Prevention Plan (SWPPP) which may be reviewed at the US Army Corps of Engineers San Francisco District (SFD) Environmental Resources Branch (ERB) Environmental Office. Remove any temporary measures after the area has been stabilized.

3.3.6 Contractor Facilities and Work Areas

Place field offices, staging areas, stockpile storage, and temporary buildings in areas designated on the drawings or as directed by the Contracting Officer. Temporary movement or relocation of Contractor facilities will be made only when approved. Erosion and sediment controls must be provided for onsite borrow and spoil areas to prevent sediment from entering nearby waters. Temporary excavation and embankments for plant and/or work areas must be controlled to protect adjacent areas.

CONFORMED

3.4 WATER RESOURCES

Monitor all water areas affected by construction activities to prevent pollution of surface and ground waters. Do not apply toxic or hazardous chemicals to soil or vegetation unless otherwise indicated. For construction activities immediately adjacent to impaired surface waters, the Contractor must be capable of quantifying sediment or pollutant loading to that surface water when required by State or Federally issued Clean Water Act permits.

The Contractor shall water the construction surfaces with water trucks to prevent wind erosion of dust into water resources, refueling equipment in designated areas, monitoring and maintaining equipment for fuel leaks regularly, and reseeding soil areas with native grass to prevent soil erosion from surface water runoff.

3.4.1 Cofferdams, Diversions, and Dewatering Operations

Construction operations for dewatering will be controlled at all times to maintain compliance with existing State water quality standards and designated uses of the surface water body. Comply with the CASQA water quality standards and anti-degradation provisions.

3.4.2 Stream Crossings

Stream crossings must allow movement of materials or equipment without violating water pollution control standards of the Federal, State, and local governments.

3.4.3 Impact of Concrete Near Waterways

Concrete will be poured only where it is separated from natural water flows during placement for a period of 30 days afterwards. Fresh concrete will be isolated until it no longer poses a threat to water quality using the following appropriate measures:

a. Wet sacked concrete will be excluded from the wetted channel for a period of 30 days after installation. During that time, the wet sacked concrete will be kept moist (such as covering with wet carpet) and runoff from the wet sacked concrete will not be allowed to enter a live stream.

b. Poured concrete will be excluded from the wetted channel for a period of 30 days after it is poured. During that time, the poured concrete will be kept moist, and runoff from the wet concrete will not be allowed to enter a live stream. Commercial sealants (e.g., Deep Seal, Elasto-Deck Reservoir Grade) may be applied to the poured concrete surface where difficulty in excluding water flow for a long period may occur. If a sealant is used, water will be excluded from the site until the sealant is dry.

c. Dry sacked concrete will not be used in any channel.

d. An area outside of the channel and floodplain will be designated to clean out concrete transit vehicles.

3.5 AIR RESOURCES

Equipment operation, activities, or processes will be in accordance with

CONFORMED

all Federal and State air emission and performance laws and standards. During construction period the best management practices for combustion emissions and PM10 will be implemented to reduce any emissions to less than significant. Additionally, guidelines provided by the U.S. EPA to minimize emissions will be used during construction. To decrease the amount of dust and PM10, unpaved roads, staging areas, and stockpile areas shall be watered, as needed, to keep them moist.

3.5.1 Particulates

Dust particles; aerosols and gaseous by-products from construction activities; and processing and preparation of materials, such as from asphaltic batch plants; must be controlled at all times, including weekends, holidays and hours when work is not in progress. Maintain excavations, stockpiles, haul roads, permanent and temporary access roads, plant sites, spoil areas, borrow areas, and other work areas within or outside the project boundaries free from particulates which would cause the Federal, State, and local air pollution standards to be exceeded or which would cause a hazard or a nuisance. Sprinkling, chemical treatment of an approved type, baghouse, scrubbers, electrostatic precipitators or other methods will be permitted to control particulates in the work area. Sprinkling, to be efficient, must be repeated to keep the disturbed area damp at all times. Provide sufficient, competent equipment available to accomplish these tasks. Perform particulate control as the work proceeds and whenever a particulate nuisance or hazard occurs. Comply with all State and local visibility regulations.

3.5.2 Dust Emission Reduction

The construction contractor shall implement the following measures during construction to reduce particulate emissions.

a. All exposed surfaces (e.g., parking areas, staging areas, soil piles, graded areas, and unpaved access roads) shall be watered two times per day.

b. All haul trucks transporting soil, sand, or other loose material off-site shall be covered.

c. All visible mud or dirt track-out onto adjacent public roads shall be removed using wet sweeping of a HEPA filter equipped vacuum device at least once per day. The use of dry power sweeping is prohibited.

d. Water used to wash the various exposed surfaces (e.g., parking areas, staging areas, soil piles, and graded areas) would not be allowed to enter waterways.

e. All vehicle speeds on unpaved roads shall be limited to 15 mph.

f. All roadways, driveways, and sidewalks to be paved shall be completed as soon as possible. Building pads shall be laid as soon as possible after grading unless seeding or soil binders are used.

g. Vegetative ground cover (e.g., fast-germinating native grass seed) shall be planted in disturbed areas as soon as possible and watered appropriately until vegetation is established.

h. The simultaneous occurrence of excavation, grading, and ground-disturbing construction activities on the same area at any one

CONFORMED

time shall be limited. Activities shall be phased to reduce the amount of disturbed surfaces at any one time.

i. All trucks and equipment, including their tires, shall be washed off prior to leaving the site.

j. Site accesses to a distance of 100 feet from the paved road shall be treated with a 6- to 12-inch compacted layer of wood chips, mulch, or gravel.

k. Sandbags or other erosion control measures shall be installed to prevent silt runoff to public roadways from sites with a slope greater than one percent.

l. Idling times shall be minimized either by shutting equipment off when not in use or reducing the maximum idling time to 5 minutes (as required by the California airborne toxic control measure Title 13, Section 2485 of California Code of Regulations), and this requirement shall be clearly communicated to construction workers (such as verbiage in contracts and clear signage at all access points).

m. All construction equipment shall be maintained and properly tuned in accordance with manufacturer's specifications, and all equipment shall be checked by a certified visible emissions evaluator.

n. Correct tire inflation shall be maintained in accordance with manufacturer's specifications on wheeled equipment and vehicles to prevent excessive rolling resistance.

o. Post a publicly visible sign with a telephone number and contact person at the lead agency to address dust complaints; any complaints shall be responded to and corrective action shall be taken within 48 hours. In addition, a BAAQMD telephone number with any applicable regulations would be included.

p. Limit vehicle speeds on unpaved roads to 15 miles per hour.

q. Install one or more of the following track-out prevention measures:

    1. A gravel pad designed using good engineering practices to clean the tires of exiting vehicles,

    2. A tire shaker,

    3. A wheel wash system,

    4. Pavement extending for not less than 50 feet from the intersection with the paved public road,

    5. Suspend any excavation operations when wind speeds are high enough to result in dust emissions across the property line, despite the application of dust mitigation measures.

    6. Any other measure(s) as effective as the measures listed above.

r. Suspend any excavation operations when wind speeds are high enough to result in dust emissions across the property line, despite the application of dust mitigation measures.

CONFORMED

s. To mitigate stockpile handling and stockpile wind erosion fugitive dust emissions, active storage pile should be kept adequately wetted using wet suppression controls.

t. To mitigate fugitive dust emissions from storage piles that would remain inactive for more than seven days, the contractor should ensure implementation of one or more of the following measures:

1. Wet suppression controls

2. Apply chemical dust suppressants or chemical stabilizers

3. Cover with tarp(s) or vegetative cover

4. Install wind barriers

5. Any other measure(s) as effective as the measures listed above

u. If concrete batch plant operations will occur onsite, one or more of the following measures should be implemented to mitigate fugitive dust emissions:

1. Apply water sprays,

2. Set up enclosures, hoods, curtains, shrouds, movable and telescoping chutes, and/or

3. Install a central dust collection system.

4. To mitigate staging area or haul road emissions, the Contractor would upon completion of the project, accomplish post-construction stabilization of disturbed surfaces by using one or more of the following measures: (a) Establishing a vegetative cover; (b) Placing at least 12 inches of non-asbestos-containing material; (c) Paving, and/or (d) Implementing any other measure deemed sufficient to prevent wind speeds of 10 miles per hour or greater from causing visible dust emissions.

a. Establishing a vegetative cover

3.5.3 Construction Equipment Emission Reduction

The construction contractor shall implement the following measures during construction to reduce particulate emissions.

a. Maintain all construction equipment in proper tune according to manufacturer's specifications.

b. Fuel all off-road and portable diesel powered equipment with ARB certified motor vehicle diesel fuel (non-taxed version suitable for use off-road).

c. Use diesel construction equipment meeting ARB's Tier 2 certified engines or cleaner off-road heavy-duty diesel engines, and comply with the State off-Road Regulation.

d. Use on-road heavy-duty trucks that meet CARB's 2007 or cleaner certification standard for on-road heavy-duty diesel engines, and comply with the State On-Road Regulation.

CONFORMED

e. All on and off-road diesel equipment shall not idle for more than 5 minutes. Signs shall be posted in the designated queuing areas and or job sites to remind drivers and operators of the 5 minute idling limit.

f. Diesel idling within 1,000 feet of sensitive receptors is not permitted.

g. Staging and queuing areas shall not be located within 1,000 feet of sensitive receptors.

h. Use electric equipment when feasible.

i. Substitute gasoline-powered in place of diesel-powered equipment, where feasible.

j. Use alternatively fueled construction equipment on-site where feasible, such as compressed natural gas (CNG), liquefied natural gas (LNG), propane or biodiesel.

k. All construction equipment, diesel trucks, and generators shall be equipped with Best Available Control Technology for reductions of NOx and PM emissions.

l. All construction equipment shall be maintained and properly tuned in accordance with manufacturer's specifications, and all equipment shall be checked by a certified visible emissions evaluator.

m. Correct tire inflation shall be maintained in accordance with manufacturer's specifications on wheeled equipment and vehicles to prevent excessive rolling resistance.

3.5.4 Odors

Odors from construction activities must be controlled at all times. The odors must be in compliance with State regulations and/or local ordinances and may not constitute a health hazard.

3.5.5 Sound Intrusions

Keep construction activities under surveillance and control to minimize environment damage by noise. Comply with the provisions of the State of California rules. Ensure that construction machinery is properly equipped with mufflers. The Contractor shall limits haul truck or other vehicle's speed on roads adjacent to residences and on unpaved roadways, limit construction hours in conformance with City noise ordinances, and notifying residences about type and schedule of construction.

3.5.6 Noise Suppression Techniques

The construction contractor will use available noise suppression devices and techniques. Construction equipment noise will be minimized during project construction by muffling and shielding intakes and exhaust on construction equipment (per the manufacturer's specifications) and by shrouding or shielding impact tools. The Contractor shall comply with the City of Mipitas and City of San Jose construction noise abatement ordinances. Noise-reduction measures specified in the City of San Jose's Noise Ordinance are described below, and will be implemented on as appropriate.

CONFORMED

a. Utilize 'quiet' models of air compressors and other stationary noise sources where technology exists;

b. Equip all internal combustion engine-driven equipment with mufflers, which are in good condition and appropriate for the equipment;

c. Locate all stationary noise-generating equipment, such as air compressors and portable power generators, as far away as possible from adjacent land uses;

d. Locate staging areas and construction material areas as far away as possible from adjacent land uses;

e. Prohibit all unnecessary idling of internal combustion engines;

f. If impact pile driving is proposed, multiple-pile drivers shall be considered to expedite construction. Although noise levels generated by multiple pile drivers would be higher than the noise generated by a single pile driver, the total duration of pile driving activities would be reduced.

g. If impact pile driving is proposed, temporary noise control blanket barriers shall shroud pile drivers or be erected in a manner to shield the adjacent land uses.

h. If impact pile driving is proposed, foundation pile holes shall be pre-drilled to minimize the number of impacts required to seat the pile.

i. Designate a "disturbance coordinator" who will be responsible for responding to any local complaints about construction noise. The disturbance coordinator will determine the cause of the noise complaint and will require that reasonable measures warranted to correct the problem be implemented. Conspicuously post a telephone number for the disturbance coordinator at the construction site and include it in the notice sent to neighbors regarding the construction schedule.

3.5.7 Burning

Burning will not be allowed on the project site unless specified in other sections of the specifications or authorized in writing by the Contracting Officer. The specific time, location, and manner of burning will be subject to approval.

3.6 TRANSPORTATION MANAGEMENT PLAN

As required by Caltrans on SR-237 (Calaveras Boulevard), a Transportation Management Plan will be developed to address temporary construction traffic impacts on SR-237. The plan will be prepared in accordance with the Caltrans' Manual of Uniform Traffic Control Devises and in accordance with professional traffic engineering standards to show methods for maintaining traffic flows on roadways directly affected by construction. Caltrans will approve the plan before the start of construction. Mitigation measures will be incorporated into the construction plans in order to reduce effects to traffic.

The construction contractor will also be required to develop a Traffic Control Plan prior to construction, and coordinate all use of public roads with the Cities of Milpitas and or San Jose, local and regional planning agencies, emergency service providers, air quality management districts, or

CONFORMED

other responsible agencies. The contractor shall not close any City of Milpitas street. Partial lane closures maybe be allowed in non-commute directions and during non-commute hours. This plan will include the following measures:

a. Construction vehicles will not be permitted to block any roadways or driveways.

b. Truck trips will be scheduled outside of peak morning and evening commute hours, as well as during peak school circulation times, to the extent possible.

c. Signs and flagmen will be used, as needed, to alert motorists, bicyclists, and pedestrians to the presence of haul trucks and construction vehicles at all access points.

d. Vehicles will be required to obey all speed limits, traffic laws, and transportation regulations during construction. Vehicles will not exceed 15 miles per hour on unpaved roads.

e. Construction workers will be encouraged to carpool and park in designated staging areas.

f. Closure of roads, staging areas, and construction sites will be clearly fenced and delineated with appropriate closure signage.

g. The contractor will be required to repair any roads damaged by construction.

h. Circulation plans will be developed to minimize impacts on local street circulation. Flaggers and/or signage will be used to guide vehicles through and/or around the construction zone.

i. The construction contractor will notify all emergency service providers in advance of construction to inform them of the construction activities. Traffic control staff will be trained in specific methods to prioritize and ensure access for emergency vehicles. Access will be provided for emergency vehicles at all times.

j. Truck routes will be identified in the Traffic Control Plan. Haul routes will utilize City of Milpitas, City of San Jose, and Caltrans designated haul routes and minimize truck traffic on local roadways and residential streets to the extent possible.

k. Sufficient staging areas will be provided for trucks accessing construction zones to minimize disruption of access to adjacent land uses.

l. Access to driveways and private roads will be maintained. If access must be restricted for brief periods, property owners shall be notified in advance.

m. The construction contractor will coordinate with UPRR for work within the right-of-way and avoid disruption to the rail corridor.

n. Construction will be coordinated with local traffic agencies, VTA, and AC Transit to minimize disruption to service on local bus routes.

o. Construction will coordinated with police and fire stations, transit

CONFORMED

stations, hospitals, and schools. Facility operators shall be notified in advance of the timing, location, and duration of construction activities.

p. Pedestrian and bicycle access and circulation will be maintained during construction where safe to do so. If construction activities encroach on a bicycle lane, warning signs will be posted.

q. Work site(s) will be appropriately fenced off from adjacent properties, roadways, and sidewalks to ensure safety of nearby residents and pedestrians.

r. All equipment and materials will be stored in designated contractor staging areas on or adjacent to the worksite, in such a manner as to minimize obstruction of traffic.

3.7 CHEMICAL MATERIALS MANAGEMENT AND WASTE DISPOSAL

Disposal of wastes will be as directed below, unless otherwise specified in other sections and/or shown on the drawings.

3.7.1 Solid Wastes

Place solid wastes (excluding clearing debris) in containers which are emptied on a regular schedule. Handling, storage, and disposal must be conducted to prevent contamination. Employ segregation measures so that no hazardous or toxic waste will become co-mingled with solid waste. Transport solid waste off Government property and dispose of it in compliance with Federal, State, and local requirements for solid waste disposal. Verify that the selected transporters and disposal facilities have the necessary permits and licenses to operate.

3.7.2 Chemicals and Chemical Wastes

Dispense chemicals ensuring no spillage to the ground or water. Perform and document periodic inspections of dispensing areas to identify leakage and initiate corrective action. This documentation will be periodically reviewed by the Government. Collect chemical waste in corrosion resistant, compatible containers. Collection drums must be monitored and removed to a staging or storage area when contents are within 6 inches of the top. Wastes will be classified, managed, stored, and disposed of in accordance with Federal, State, and local laws and regulations.

3.7.3 Contractor Generated Hazardous Wastes/Excess Hazardous Materials

Hazardous wastes are defined in 40 CFR 261, or are as defined by applicable State and local regulations. Hazardous materials are defined in 49 CFR 171 - 178. At a minimum, manage and store hazardous waste in compliance with 40 CFR 262 in accordance with the hazardous waste management plan. Take sufficient measures to prevent spillage of hazardous and toxic materials during dispensing. Segregate hazardous waste from other materials and wastes, protect it from the weather by placing it in a safe covered location, and take precautionary measures such as berming or other appropriate measures against accidental spillage. Storage, describing, packaging, labeling, marking, and placarding of hazardous waste and hazardous material in accordance with 49 CFR 171 - 178, State, and local laws and regulations is the Contractor's responsibility. Transport Contractor generated hazardous waste off Government property within 60 days in accordance with the Environmental Protection Agency and the Department

CONFORMED

of Transportation laws and regulations. Dispose of hazardous waste in compliance with Federal, State and local laws and regulations. Spills of hazardous or toxic materials must be immediately reported to the Contracting Officer. Cleanup and cleanup costs due to spills are the Contractor's responsibility. The disposition of Contractor generated hazardous waste and excess hazardous materials are the Contractor's responsibility.

3.7.4 Fuel and Lubricants

Storage, fueling and lubrication of equipment and motor vehicles must be conducted in a manner that affords the maximum protection against spill and evaporation. Manage and store fuel, lubricants and oil in accordance with all Federal, State, Regional, and local laws and regulations. Used lubricants and used oil to be discarded must be stored in marked corrosion-resistant containers and recycled or disposed in accordance with 40 CFR 279, State, and local laws and regulations. Storage of fuel on the project site will be in accordance with all Federal, State, and local laws and regulations. Construction vehicles will be continuously examined for leaking fluids. Petroleum products, cleaning agents, wash down waters, and other toxic or oxidizable materials will be prevented from entering waters of the U.S.

3.7.5 Waste Water

Disposal of waste water will be as specified below.

a. Waste water from construction activities, such as onsite material processing, concrete curing, foundation and concrete clean-up, water used in concrete trucks, forms, etc. will not be allowed to enter water ways or to be discharged prior to being treated to remove pollutants. Dispose of the construction related waste water off-Government property in accordance with all Federal, State, Regional and Local laws and regulations. The area must be backfilled to the original grade, top soiled and seeded/sodded.

b. For discharge of ground water, the Contractor will obtain a State or Federal permit specific surface discharge in accordance with the requirements of the State Water Resources Control Board permit.

c. Water generated from the flushing of lines after disinfection or disinfection in conjunction with hydrostatic testing will be discharged into the sanitary sewer with prior approval and/or notification to the Waste Water Treatment Plant's Operator.

3.8 RECYCLING AND WASTE MINIMIZATION

Participate in State and local government sponsored recycling programs. The Contractor must participate in the following recycling and waste minimization activities to divert non-hazardous solid waste.

3.9 NON-HAZARDOUS SOLID WASTE DIVERSION REPORT

Maintain an inventory of non-hazardous solid waste diversion and disposal of construction and demolition debris. Submit a report to ADEQ through the Contracting Officer on the first working day after each fiscal year quarter, starting the first quarter that non-hazardous solid waste has been generated. Include the following in the report:

CONFORMED

Construction and Demolition (C&D) Debris Disposed	C&D Debris Disposed in cubic yards or tons, as appropriate
Construction and Demolition (C&D) Debris Recycled	C&D Debris Recycled in cubic yards or tons, as appropriate
Total C&D Debris Generated	Total C&D Debris Disposed in cubic yards or tons, as appropriate
Waste Sent to Waste-To-Energy Incineration Plant (This amount should not be included in the recycled amount)	Waste Sent to Waste-To-Energy Incineration Plant in cubic yards or tons, as appropriate

3.10 BIOLOGICAL RESOURCES

Minimize interference with, disturbance to, and damage to fish, wildlife, and plants including their habitat. The protection of threatened and endangered animal and plant species, including their habitat, is the Contractor's responsibility in accordance with Federal, State, Regional, and local laws and regulations.

3.10.1 Protection of Wildlife

The Contractor shall hire a Bird Biologist to conduct nesting bird surveys for Migratory Bird Treaty Act (MBTA) compliance. The pre-construction bird surveys shall take place prior to any site disturbance. The Contractor shall at all times perform all work and take such steps required to prevent interference or disturbance to fish and wildlife.

The Contractor shall hire a Bird Biologist to conduct pre-construction surveys for active nests along proposed haul roads, staging areas, and construction sites. Information pertaining to the vegetation removal schedule as it pertains to migratory birds is provided in CLEARING AND GRUBBING Section 31 11 00.

The Contractor shall submit the name and qualifications of the Bird Biologist to the Contracting Officer for approval. The bird biologist shall meet the following minimum requirements:

a. He/she shall have 5 years of experience with nesting bird surveys in urban, wetland, and/or riparian areas.

b. Can identify on sight the vast majority of bird species found in urban, suburban, ruderal, grassland, wetland, and riparian forest habitats in Santa Clara County.

c. He/she shall be able to identify any other species quickly through reference materials.

d. Is proficient in determining whether nesting activity is occurring and whether a nest is occupied.

The Contractor shall provide a qualified biologist to survey the construction area for eggs or young migratory birds just prior to construction or any site disturbance such as clearing and grubbing. If eggs or migratory birds are found within the construction area boundaries a buffer of 50 feet shall be maintained around all active nests. A buffer of 300 ft. shall be maintained for nesting raptors. No construction activities shall occur within the buffer zones while the nest is active.

If negative effects on nesting birds are observed, the Corps of Engineers

CONFORMED

shall be notified immediately so appropriate action can be determined such as increased buffers around nests.

Trees to be removed and which are suitable for nesting shall be removed between September 1 and February 15, when nests are unoccupied.

The potential for active nests shall be reduced by maintaining all grassy and weedy vegetation within the construction area boundaries at a height of 6 inches or less during the February 1 to August 31 Migratory Bird nesting season.

3.11 PREVIOUSLY USED EQUIPMENT

Clean all previously used construction equipment prior to bringing it onto the project site. Ensure that the equipment is free from soil residuals, egg deposits from plant pests, noxious weeds, and plant seeds. Consult with the USDA jurisdictional office for additional cleaning requirements.

3.12 MAINTENANCE OF POLLUTION FACILITIES

Maintain permanent and temporary pollution control facilities and devices for the duration of the contract or for that length of time construction activities create the particular pollutant.

3.13 TRAINING OF CONTRACTOR PERSONNEL

The Contractor's personnel must be trained in all phases of environmental protection and pollution control. Conduct environmental protection/pollution control meetings for all personnel prior to commencing construction activities. Additional meetings must be conducted for new personnel and when site conditions change. Include in the training and meeting agenda: methods of detecting and avoiding pollution; familiarization with statutory and contractual pollution standards; installation and care of devices, vegetative covers, and instruments required for monitoring purposes to ensure adequate and continuous environmental protection/pollution control; anticipated hazardous or toxic chemicals or wastes, and other regulated contaminants; recognition and protection of archaeological sites, artifacts, wetlands, and endangered species and their habitat that are known to be in the area.

3.14 POST CONSTRUCTION CLEANUP

The Contractor will clean up all areas used for construction in accordance with Contract Clause: "Cleaning Up". Unless otherwise instructed in writing by the Contracting Officer, obliterate all signs of temporary construction facilities such as haul roads, work area, structures, foundations of temporary structures, stockpiles of excess or waste materials, and other vestiges of construction prior to final acceptance of the work. The disturbed area must be graded, filled and the entire area seeded unless otherwise indicated.

-- End of Section --

CONFORMED

SECTION TABLE OF CONTENTS

DIVISION 01 - GENERAL REQUIREMENTS

SECTION 01 57 23

TEMPORARY STORM WATER POLLUTION CONTROL

04/08

PART 1 GENERAL

1.1 SUMMARY
1.2 REFERENCES
1.3 EROSION AND SEDIMENT CONTROLS
1.3.1 Stabilization Practices
1.3.1.1 Inactive Areas
1.3.1.2 Burnoff
1.3.1.3 Protection of Erodible Soils
1.3.2 Erosion, Sediment and Stormwater Control
1.3.3 Structural Practices
1.3.3.1 Silt Fences
1.3.3.2 Fiber Rolls
1.3.3.3 Diversion Dikes
1.3.4 Vegetation and Mulch
1.4 SUBMITTALS
1.5 DELIVERY, STORAGE, AND HANDLING

PART 2 PRODUCTS

2.1 COMPONENTS FOR SILT FENCES
2.1.1 Filter Fabric
2.1.2 Silt Fence Stakes and Posts
2.1.3 Mill Certificate or Affidavit
2.2 Components of Fiber Rolls
2.2.1 Fiber Rolls

PART 3 EXECUTION

3.1 INSTALLATION OF SILT FENCES
3.2 INSTALLATION OF FIBER ROLLS
3.3 FIELD QUALITY CONTROL
3.3.1 Silt Fence Maintenance
3.3.2 Fiber Roll Maintenance
3.3.3 Diversion Dike Maintenance
3.4 INSPECTIONS
3.4.1 General
3.4.2 Inspections Details
3.4.3 Inspection Reports
3.4.4 Monthly Inspection Report and Certification Form

-- End of Section Table of Contents --

CONFORMED

SECTION 01 57 23

TEMPORARY STORM WATER POLLUTION CONTROL
04/08

PART 1 GENERAL

1.1 SUMMARY

The work consists of implementing the storm water pollution prevention measures to prevent sediment from entering streams or water bodies as specified in this Section in conformance with the State of California's Construction General Permit 2009-0009-DWQ and amendments 2010-00140-DWQ, which meet the requirements of Section 01 57 20.00 10 ENVIRONMENTAL PROTECTION and the National Pollutant Discharge Elimination System (NPDES).

1.2 REFERENCES

The publications listed below form a part of this specification to the extent referenced. The publications are referred to within the text by the basic designation only.

ASTM INTERNATIONAL (ASTM)

ASTM D4439	(2011) Geosynthetics
ASTM D4491	(1999a; R 2014; E 2014) Water Permeability of Geotextiles by Permittivity
ASTM D4533	(2011) Trapezoid Tearing Strength of Geotextiles
ASTM D4632/D4632M	(2008; R 2013; E 2013; E 2014) Grab Breaking Load and Elongation of Geotextiles
ASTM D4751	(2012) Determining Apparent Opening Size of a Geotextile
ASTM D4873	(2002; R 2009) Identification, Storage, and Handling of Geosynthetic Rolls and Samples

California Stormwater Quality Association (CASQA)

BMP Handbook	(2015) Stormwater Best Management Practice Handbook

U.S. NATIONAL ARCHIVES AND RECORDS ADMINISTRATION (NARA)

40 CFR 122.26	Storm Water Discharges (Applicable to State NPDES Programs, see section 123.25)

1.3 EROSION AND SEDIMENT CONTROLS

The controls and measures required of the Contractor are described below.

CONFORMED

1.3.1 Stabilization Practices

The stabilization practices to be implemented include temporary seeding, mulching, geotextiles, sod stabilization, vegetative buffer strips, erosion control mats, protection of trees, preservation of mature vegetation, etc. On the daily CQC Report, record the dates when the major grading activities occur, (e.g., clearing and grubbing, excavation, embankment, and grading); when construction activities temporarily or permanently cease on a portion of the site; and when stabilization practices are initiated. Inactive areas of construction activity that have been disturbed and are not scheduled to be re-disturbed for at least 14 days must be protected using erosion control practices immediately.

1.3.1.1 Inactive Areas

The Contractor shall provide effective soil cover for inactive areas and all finished slopes, open spaces, utility backfill, and completed project areas.

1.3.1.2 Burnoff

Burnoff of the ground cover is not permitted.

1.3.1.3 Protection of Erodible Soils

Immediately finish the earthwork brought to a final grade, as indicated or specified, and protect the side slopes and back slopes upon completion of rough grading. Plan and conduct earthwork to minimize the duration of exposure of unprotected soils.

1.3.2 Erosion, Sediment and Stormwater Control

a. Comply with Clean Water Act (CWA) Section 401 Water Quality Certification (WQC) permit issued from the State Water Resources Control Board.

b. Submit "Erosion and Sediment Controls" (E&S) (form provided at the pre-construction conference) and Storm Water Inspection Reports for General Permit to the Contracting Officer once every 7 calendar days and within 24 hours of a storm event that produces 0.5 inch or more of rain.

c. Storm Water Notice of Intent for Construction Activities

d. Submit a Storm Water Notice of Intent for NPDES coverage under the general permit for construction activities and a Storm Water Pollution Prevention Plan (SWPPP) for the project to the Contracting Officer prior to the commencement of work. The SWPPP shall meet the requirements of the State of California Construction General Permit 2009-0009-DWQ and associated amendments 2010-0014-DWQ and 2012-0006-DWQ for storm water discharges from construction sites. Submit the SWPPP along with any required Notice of Intents, Notice of Termination, and appropriate permit fees, via the Contracting Officer, to the appropriate State agency for approval, a minimum of 14 calendar days prior to the start of any land disturbing activities. Maintain an approved copy of the SWPPP at the construction on-site office, and continually update as regulations require, to reflect current site conditions. Include within the SWPPP:

CONFORMED

(1) Identify potential sources of pollution which may be reasonably expected to affect the quality of storm water discharge from the site.

(2) Describe and ensure implementation of practices which will be used to reduce the pollutants in storm water discharge from the site.

(3) Ensure compliance with terms of the State of California Construction General Permit for storm water discharge.

(4) Select applicable best management practices from BMP Handbook.

(5) Include a completed copy of the Registration Statement, BMP Inspection Report Template and Notice of Termination except for the effective date.

(6) Storm Water Pollution Prevention Measures and Notice of Intent 40 CFR 122.26, BMP Handbook. Provide a "Storm Water Pollution Prevention Plan" (SWPPP) for the project. The SWPPP will meet the requirements of State Water Resources Control Board general permit 2009-0009-DWQ amended by 2010-0014-DWQ and 2012-0006-DWQ for storm water discharges from construction sites. Submit the SWPPP along with any required Notice of Intents, Notice of Termination, and appropriate permit fees, a minimum of 14 calendar days prior to the start of construction. A copy of the SWPPP will be kept at the construction on-site office, and continually updated as regulations require to reflect current site conditions.

1.3.3 Structural Practices

Implement structural practices to divert flows from exposed soils, temporarily store flows, or otherwise limit runoff and the discharge of pollutants from exposed areas of the site. Implement structural practices in a timely manner, during the construction process, to minimize erosion and sediment runoff.

1.3.3.1 Silt Fences

Provide silt fences as a temporary structural practice to minimize erosion and sediment runoff. Properly install silt fences to effectively retain sediment immediately after completing each phase of work where erosion would occur in the form of sheet and rill erosion (e.g. clearing and grubbing, excavation, embankment, and grading). Install silt fences in the locations indicated on the drawings. Obtain approval from the Contracting Officer prior to final removal of silt fence barriers.

1.3.3.2 Fiber Rolls

Fiber rolls consist of straw, flax or other similar materials inserted into a tube of netting. Fiber rolls are placed on the face of slopes at regular intervals and/or at the toe of slopes to intercept runoff, reduce its flow velocity, release the runoff as sheet flow, and provide some removal of sediment from the runoff. Fiber rolls may be used along the top, face and at grade breaks of exposed and erodible slopes to shorten slope length and spread runoff as sheet flow.

1.3.3.3 Diversion Dikes

Build diversion dikes with a maximum channel slope of 2 percent and

CONFORMED

adequately compacted to prevent failure. The minimum height measured from the top of the dike to the bottom of the channel shall be 18 inches. The minimum base width shall be 6 feet and the minimum top width shall be 2 feet. Ensure that the diversion dikes are not damaged by construction operations or traffic. Locate diversion dikes where shown on the drawings.

1.3.4 Vegetation and Mulch

a. Provide temporary protection on sides and back slopes as soon as rough grading is completed or sufficient soil is exposed to require erosion protection. Protect slopes by accelerated growth of permanent vegetation, temporary vegetation, mulching, or netting. Stabilize slopes by hydroseeding, anchoring mulch in place, covering with anchored netting, sodding, or such combination of these and other methods necessary for effective erosion control.

b. Seeding: Provide new seeding where ground is disturbed. Include topsoil or nutriment during the seeding operation necessary to establish a suitable stand of grass. The seeding operation will be as specified in Section 32 92 19 SEEDING.

1.4 SUBMITTALS

Government approval is required for submittals with a "G" designation; submittals not having a "G" designation are for information only. When used, a designation following the "G" designation identifies the office that will review the submittal for the Government. Submit the following in accordance with Section 01 33 00 SUBMITTAL PROCEDURES:

SD-01 Preconstruction Submittals

Storm Water Pollution Prevention Plan
Storm Water Notice of Intent

SD-06 Test Reports

Storm Water Inspection Reports for General Permit
Erosion and Sediment Controls

SD-07 Certificates

Mill Certificate or Affidavit

1.5 DELIVERY, STORAGE, AND HANDLING

Identify, store and handle filter fabric in accordance with ASTM D4873.

PART 2 PRODUCTS

2.1 COMPONENTS FOR SILT FENCES

2.1.1 Filter Fabric

Provide geotextile that complies with the requirements of ASTM D4439, and consists of polymeric filaments which are formed into a stable network such that filaments retain their relative positions. The filament shall consist of a long-chain synthetic polymer composed of at least 85 percent by weight of ester, propylene, or amide, and contains stabilizers and/or inhibitors added to the base plastic to make the filaments resistant to deterioration

CONFORMED

due to ultraviolet and heat exposure. Provide synthetic filter fabric that contains ultraviolet ray inhibitors and stabilizers to assure a minimum of six months of expected usable construction life at a temperature range of 0 to 120 degrees F. The filter fabric shall meet the following requirements:

FILTER FABRIC FOR SILT SCREEN FENCE		
PHYSICAL PROPERTY	TEST PROCEDURE	STRENGTH REQUIREMENT
Grab Tensile Elongation (percent)	ASTM D4632/D4632M	100 lbs. min. 30 percent max.
Trapezoid Tear	ASTM D4533	55 lbs. min.
Permittivity	ASTM D4491	0.2 sec-1
AOS (U.S. Std Sieve)	ASTM D4751	20-100

2.1.2 Silt Fence Stakes and Posts

Use either wooden stakes or steel posts for fence construction. Wooden stakes utilized for silt fence construction, shall have a minimum cross section of 2 by 2 inches when oak is used and 4 by 4 inches when pine is used, and have a minimum length of 5 feet. Steel posts (standard "U" or "T" section) utilized for silt fence construction, shall have a minimum weight of 1.33 pounds/linear foot and a minimum length of 5 feet.

2.1.3 Mill Certificate or Affidavit

Provide a mill certificate or affidavit attesting that the fabric and factory seams meet chemical, physical, and manufacturing requirements specified above. Specify in the mill certificate or affidavit the actual Minimum Average Roll Values and identify the fabric supplied by roll identification numbers. Submit a mill certificate or affidavit signed by a legally authorized official from the company manufacturing the filter fabric.

2.2 Components of Fiber Rolls

2.2.1 Fiber Rolls

Fiber roll must have a minimum functional longevity of 1 year and comply with the following requirements:

1. Type A fiber roll must be fabricated from an erosion control blanket rolled along its width. Secure with natural fiber twine at 6-foot intervals, and 6 inches from each end. Fiber roll size must comply with either one of the following:

    a. 8 to 10 inches in diameter, 10 to 20 feet long, and at least 0.5 lb/ft.

    b. 10 to 12 inches in diameter, at least 10 feet long, and at least 2 lb/ft.

2. Type B fiber roll must be a premanufactured roll filled with rice or wheat straw, wood excelsior, or coconut fiber. Rolls must be covered with

CONFORMED

biodegradable jute, sisal, or coir fiber netting secured tightly at each end. Fiber roll size must comply with either one of the following:

a. 8 to 10 inches in diameter, 10 to 20 feet long, and at least 1.1 lb/ft.

b. 10 to 12 inches in diameter, at least 10 feet long, and at least 3 lb/ft.

PART 3 EXECUTION

3.1 INSTALLATION OF SILT FENCES

Extend silt fences a minimum of 16 inches above the ground surface without exceeding 34 inches above the ground surface. Provide filter fabric from a continuous roll cut to the length of the barrier to avoid the use of joints. When joints are unavoidable, splice together filter fabric at a support post, with a minimum 6 inch overlap, and securely sealed. Excavate trench approximately 4 inches wide and 4 inches deep on the upslope side of the location of the silt fence. The 4 by 4 inch trench shall be backfilled and the soil compacted over the filter fabric. Remove silt fences upon approval by the Contracting Officer.

3.2 INSTALLATION OF FIBER ROLLS

Installation of fiber rolls shall conform to the requirements of SE-5 Fiber Rolls of BMP Handbook.

Locate fiber rolls on level contours spaced as follows:

a. Slope inclination of 4H:1V or flatter: Fiber rolls should be placed at a maximum interval of 20 feet.

b. Slope inclination between 4H:1V and 2H:1V: Fiber rolls should be placed at a maximum interval of 15 feet.

c. Slope inclination 2H:1V or greater: Fiber rolls should be placed at a maximum interval of 10 feet.

Turn the end of fiber roll up slope to prevent runoff from going around the roll. Stake fiber rolls into a 2 to 4 inches deep trench with a width equal to diameter of the fiber roll. Drive stakes at the end of each fiber roll and spaced 4 feet maximum on center. Use wood stakes with a nominal classification of 0.75 by 0.75 inches and maximum length of 24 inches.

If more than one fiber roll is placed in a row, the rolls should be overlapped, not abutted.

3.3 FIELD QUALITY CONTROL

Maintain the temporary and permanent vegetation, erosion and sediment control measures, and other protective measures in good and effective operating condition by performing routine inspections to determine condition and effectiveness, by restoration of destroyed vegetative cover, and by repair of erosion and sediment control measures and other protective measures. Use the following procedures to maintain the protective measures.

CONFORMED

3.3.1 Silt Fence Maintenance

Inspect the silt fences in accordance with paragraph, titled "Inspections," of this section. Any required repairs shall be made promptly. Pay close attention to the repair of damaged silt fence resulting from end runs and undercutting. Should the fabric on a silt fence decompose or become ineffective, and the barrier is still necessary, replace the fabric promptly. Remove sediment deposits when deposits reach one-third of the height of the barrier. Remove a silt fence when it is no longer required. The immediate area occupied by the fence and any sediment deposits shall be shaped to an acceptable grade. The areas disturbed by this shaping shall receive erosion control.

3.3.2 Fiber Roll Maintenance

Inspect the silt fences in accordance with paragraph, titled "Inspections," of this section. Repair or replace split, torn, unraveling, or slumping fiber rolls. If fiber rolls are used for erosion control, such as in a mini check dam, sediment removal should not be required as long as the system continues to control the grade. Sediment control BMPs will likely be required in conjunction with this type of application.

If the fiber roll is used as a sediment capture device, or as an erosion control device to maintain sheet flow, sediment that accumulates in the BMP must be periodically removed in order to maintain BMP effectiveness. Sediment should be removed when sediment accumulation reaches on-half the designated sediment storage depth, usually on-half the distance between the top of the fiber roll and the adjacent ground surface. Sediment removed during main maintenance may be incorporated into earthwork on the site or disposed at an appropriated location.

3.3.3 Diversion Dike Maintenance

Inspect diversion dikes in accordance with paragraph, titled "Inspections," of this section. Pay close attention to the repair of damaged diversion dikes and accomplish necessary repairs promptly. When diversion dikes are no longer required, shape to an acceptable grade. Seed the areas disturbed by this shaping in accordance with Section 32 92 19 SEEDING.

3.4 INSPECTIONS

3.4.1 General

Inspect disturbed areas of the construction site, areas that have not been finally stabilized used for storage of materials exposed to precipitation, stabilization practices, structural practices, other controls, and area where vehicles exit the site at least once every seven (7) calendar days and within 24 hours of the end of any storm that produces 0.5 inches or more rainfall at the site. Conduct inspections at least once every month where sites have been finally stabilized.

3.4.2 Inspections Details

Inspect disturbed areas and areas used for material storage that are exposed to precipitation for evidence of, or the potential for, pollutants entering the drainage system. Observe erosion and sediment control measures identified in the Storm Water Pollution Prevention Plan to ensure that they are operating correctly. Inspect discharge locations or points to ascertain whether erosion control measures are effective in preventing

CONFORMED

significant impacts to receiving waters. Inspect locations where vehicles exit the site for evidence of offsite sediment tracking.

3.4.3 Inspection Reports

For each inspection conducted, prepare a report summarizing the scope of the inspection, name(s) and qualifications of personnel making the inspection, the date(s) of the inspection, major observations relating to the implementation of the Storm Water Pollution Prevention Plan, maintenance performed, and actions taken. Furnish the report to the Contracting Officer within 24 hours of the inspection as a part of the Contractor's daily CQC REPORT. A copy of the inspection report shall be maintained on the job site.

3.4.4 Monthly Inspection Report and Certification Form

Complete, sign, and submit the original form, on the first working day of each month, to the State Water Resources Control Board at the following address:

https://smarts.waterboards.ca.gov

All submittals to the SWRCB should be submitted electronically via the SMART system.

-- End of Section --

CONFORMED

SECTION TABLE OF CONTENTS

DIVISION 01 - GENERAL REQUIREMENTS

SECTION 01 58 00

PROJECT IDENTIFICATION

08/09

PART 1 GENERAL

1.1 REFERENCES
1.2 SUBMITTALS
1.3 PROJECT SIGN
1.3.1 Construction Project Signs (USACE)

PART 2 PRODUCTS

PART 3 EXECUTION

-- End of Section Table of Contents --

CONFORMED

SECTION 01 58 00

PROJECT IDENTIFICATION
08/09

PART 1 GENERAL

1.1 REFERENCES

The publications listed below form a part of this specification to the extent referenced. The publications are referred to within the text by the basic designation only.

U.S. ARMY CORPS OF ENGINEERS (USACE)

EP 310-1-6a	(2006) Sign Standards Manual, VOL 1
EP 310-1-6b	(2006) Sign Standards Manual, VOL 2, Appendices

1.2 SUBMITTALS

Government approval is required for submittals with a "G" designation; submittals not having a "G" designation are for information only. When used, a designation following the "G" designation identifies the office that will review the submittal for the Government. Submit the following in accordance with Section 01 33 00 SUBMITTAL PROCEDURES:

SD-02 Shop Drawings

Sign Legend Orders; G

1.3 PROJECT SIGN

1.3.1 Construction Project Signs (USACE)

Furnish the construction project sign package, maintain the signs during construction, and remove the signs from the job site upon completion of the project. The construction project sign package consists of two signs: one for project identification and the other to show the on-the-job safety performance of the contractor. The package shall conform to the requirements of EP 310-1-6a and EP 310-1-6b, specifically Section 16. Submit the sign legend orders as described in Section 16 of EP 310-1-6a prior to erecting the signs. The requirements of Construction Project Signs are included as Appendix D for reference.

PART 2 PRODUCTS

Not Used

PART 3 EXECUTION

Not Used

-- End of Section --

CONFORMED

SECTION TABLE OF CONTENTS

DIVISION 01 - GENERAL REQUIREMENTS

SECTION 01 78 00

CLOSEOUT SUBMITTALS

08/11

PART 1 GENERAL

1.1 SUBMITTALS
1.2 PROJECT RECORD DOCUMENTS
1.2.1 Record Drawings
1.2.1.1 Government Furnished Materials
1.2.1.2 Working Record and Final Record Drawings
1.2.1.3 Drawing Preparation
1.2.1.4 Computer Aided Design and Drafting (CADD) Drawings
1.2.1.5 Payment
1.2.2 Final Approved Shop Drawings
1.2.3 Construction Contract Specifications
1.3 WARRANTY MANAGEMENT
1.3.1 Warranty Management Plan
1.3.2 Performance Bond
1.3.3 Pre-Warranty Conference
1.3.4 Warranty Tags
1.4 OPERATION AND MAINTENANCE MANUALS
1.4.1 Configuration
1.4.2 Training and Instruction
1.5 CLEANUP

PART 2 PRODUCTS

PART 3 EXECUTION

-- End of Section Table of Contents --

CONFORMED

SECTION 01 78 00

CLOSEOUT SUBMITTALS
08/11

PART 1 GENERAL

1.1 SUBMITTALS

Government approval is required for submittals with a "G" designation; submittals not having a "G" designation are for information only. When used, a designation following the "G" designation identifies the office that will review the submittal for the Government. Submit the following in accordance with Section 01 33 00 SUBMITTAL PROCEDURES:

SD-01 Preconstruction Submittals

Warranty Management Plan; G

SD-11 Closeout Submittals

Record Drawings; G
Operation and Maintenance Manuals; G

1.2 PROJECT RECORD DOCUMENTS

1.2.1 Record Drawings

Drawings showing final as-built conditions of the project. This paragraph covers record drawings complete, as a requirement of the contract. The terms "drawings," "contract drawings," "drawing files," "working record drawings" and "final record drawings" refer to contract drawings which are revised to be used for final record drawings showing as-built conditions. The final CAD record drawings must consist of one set of electronic CAD drawing files in the specified format, 2 sets of prints, and one set of the approved working Record drawings.

1.2.1.1 Government Furnished Materials

One set of electronic CADD files in the specified software and format revised to reflect all bid amendments will be provided by the Government at the preconstruction conference for projects requiring CADD file record drawings.

1.2.1.2 Working Record and Final Record Drawings

Revise 2 sets of paper drawings by red-line process to show the as-built conditions during the prosecution of the project. Keep these working as-built marked drawings current on a weekly basis and at least one set available on the jobsite at all times. Changes from the contract plans which are made in the work or additional information which might be uncovered in the course of construction must be accurately and neatly recorded as they occur by means of details and notes. Prepare final record (as-built) drawings after the completion of each definable feature of work as listed in the Contractor Quality Control Plan (Foundations, Utilities, Structural Steel, etc., as appropriate for the project). The working

CONFORMED

as-built marked prints and final record (as-built) drawings will be jointly reviewed for accuracy and completeness by the Contracting Officer and the Contractor prior to submission of each monthly pay estimate. If the Contractor fails to maintain the working and final record drawings as specified herein, the Contracting Officer will deduct from the monthly progress payment an amount representing the estimated cost of maintaining the record drawings. This monthly deduction will continue until an agreement can be reached between the Contracting Officer and the Contractor regarding the accuracy and completeness of updated drawings. Show on the working and final record drawings, but not limited to, the following information:

a. The actual location, kinds and sizes of all sub-surface utility lines. In order that the location of these lines and appurtenances may be determined in the event the surface openings or indicators become covered over or obscured, show by offset dimensions to two permanently fixed surface features the end of each run including each change in direction on the record drawings. Locate valves, splice boxes and similar appurtenances by dimensioning along the utility run from a reference point. Also record the average depth below the surface of each run.

b. The location and dimensions of any changes within the building structure.

c. Correct grade, elevations, cross section, or alignment of roads, earthwork, structures or utilities if any changes were made from contract plans.

d. Changes in details of design or additional information obtained from working drawings specified to be prepared and/or furnished by the Contractor; including but not limited to fabrication, erection, installation plans and placing details, pipe sizes, insulation material, dimensions of equipment foundations, etc.

e. The topography, invert elevations and grades of drainage installed or affected as part of the project construction.

f. Changes or modifications which result from the final inspection.

g. Where contract drawings or specifications present options, show only the option selected for construction on the final as-built prints.

h. If borrow material for this project is from sources on Government property, or if Government property is used as a spoil area, furnish a contour map of the final borrow pit/spoil area elevations.

i. Systems designed or enhanced by the Contractor, such as HVAC controls, fire alarm, fire sprinkler, and irrigation systems.

j. Modifications (include within change order price the cost to change working and final record drawings to reflect modifications) and compliance with the following procedures.

(1) Follow directions in the modification for posting descriptive changes.

(2) Place a Modification Circle at the location of each deletion.

CONFORMED

(3) For new details or sections which are added to a drawing, place a Modification Circle by the detail or section title.

(4) For minor changes, place a Modification Circle by the area changed on the drawing (each location).

(5) For major changes to a drawing, place a Modification Circle by the title of the affected plan, section, or detail at each location.

(6) For changes to schedules or drawings, place a Modification Circle either by the schedule heading or by the change in the schedule.

(7) The Modification Circle size shall be 1/2 inch diameter unless the area where the circle is to be placed is crowded. Smaller size circle shall be used for crowded areas.

1.2.1.3 Drawing Preparation

Modify the record drawings as may be necessary to correctly show the features of the project as it has been constructed by bringing the contract set into agreement with approved working as-built prints, and adding such additional drawings as may be necessary. These working as-built marked prints must be neat, legible and accurate. These drawings are part of the permanent records of this project and must be returned to the Contracting Officer after approval by the Government. Any drawings damaged or lost by the Contractor must be satisfactorily replaced by the Contractor at no expense to the Government.

1.2.1.4 Computer Aided Design and Drafting (CADD) Drawings

Only employ personnel proficient in the preparation of CADD drawings to modify the contract drawings or prepare additional new drawings. Additions and corrections to the contract drawings must be equal in quality and detail to that of the originals. Line colors, line weights, lettering, layering conventions, and symbols must be the same as the original line colors, line weights, lettering, layering conventions, and symbols. If additional drawings are required, prepare them using the specified electronic file format applying the same graphic standards specified for original drawings. The title block and drawing border to be used for any new final record drawings must be identical to that used on the contract drawings. Accomplish additions and corrections to the contract drawings using CADD files. The Contractor will be furnished "as-designed" drawings in Microstation V8 format compatible with a Windows 7 operating system. The electronic files will be supplied on optical disk. Provide all program files and hardware necessary to prepare final record drawings. The Contracting Officer will review final record drawings for accuracy and return them to the Contractor for required corrections, changes, additions, and deletions.

a. Provide CADD "base" colors of red, green, and blue. Color code for changes as follows:

(1) Deletions (Red) - Over-strike deleted graphic items (lines), lettering in notes and leaders.

(2) Additions (Green) - Added items, lettering in notes and leaders.

(3) Special (Blue) - Items requiring special information,

CONFORMED

coordination, or special detailing or detailing notes.

b. Rename the Contract Drawing files in a manner related to the contract number (i.e., 98-C-10.DWG) as instructed in the Pre-Construction conference. Use only those renamed files for the Marked-up changes. All changes shall be made on the layer as the original item. There shall be no deletions of existing lines; existing lines shall be over struck in red. Additions shall be in green with line weights the same as the drawing. Special notes shall be in blue on layer.

c. When final revisions have been completed, show the wording "RECORD DRAWINGS / AS-BUILT CONDITIONS" followed by the name of the Contractor in letters at least 3/16 inch high on the cover sheet drawing. Mark all other contract drawings either "Record" drawing denoting no revisions on the sheet or "Revised Record" denoting one or more revisions. Date original contract drawings in the revision block.

d. Within 20 days for contracts $5 million and above after Government approval of all of the working record drawings for a phase of work, prepare the final CADD record drawings for that phase of work and submit two sets of blue-lined prints of these drawings for Government review and approval. The Government will promptly return one set of prints annotated with any necessary corrections. Within 10 days for contracts $5 million and above revise the CADD files accordingly at no additional cost and submit one set of final prints for the completed phase of work to the Government. Within 20 days for contracts $5 million and above of substantial completion of all phases of work, submit the final record drawing package for the entire project. Submit one set of electronic files on optical disk, one set of mylars, two sets of blue-line prints and one set of the approved working record drawings. They must be complete in all details and identical in form and function to the contract drawing files supplied by the Government. Any transactions or adjustments necessary to accomplish this is the responsibility of the Contractor. The Government reserves the right to reject any drawing files it deems incompatible with the customer's CADD system. Paper prints, drawing files and storage media submitted will become the property of the Government upon final approval. Failure to submit final record drawing files and marked prints as specified will be cause for withholding any payment due the Contractor under this contract. Approval and acceptance of final record drawings must be accomplished before final payment is made to the Contractor.

1.2.1.5 Payment

No separate payment will be made for record drawings required under this contract, and all costs accrued in connection with such drawings are considered a subsidiary obligation of the Contractor.

1.2.2 Final Approved Shop Drawings

Furnish final approved project shop drawings 30 days after transfer of the completed facility.

1.2.3 Construction Contract Specifications

Furnish final record (as-built) construction contract specifications, including modifications thereto, 30 days after transfer of the completed facility.

CONFORMED

1.3 WARRANTY MANAGEMENT

1.3.1 Warranty Management Plan

Develop a warranty management plan which contains information relevant to the clause Warranty of Construction. At least 30 days before the planned pre-warranty conference, submit two sets of the warranty management plan for Government approval. Include within the warranty management plan all required actions and documents to assure that the Government receives all warranties to which it is entitled. The plan must be in narrative form and contain sufficient detail to render it suitable for use by future maintenance and repair personnel, whether tradesmen, or of engineering background, not necessarily familiar with this contract. The term "status" as indicated below must include due date and whether item has been submitted or was accomplished. Warranty information made available during the construction phase must be submitted to the Contracting Officer for approval prior to each monthly pay estimate. Assemble approved information in a binder and turn over to the Government upon acceptance of the work. The construction warranty period will begin on the date of project acceptance and continue for the full product warranty period. A joint 4 month and 9 month warranty inspection will be conducted, measured from time of acceptance, by the Contractor, Contracting Officer and the Customer Representative. Include within the warranty management plan, but not limited to, the following:

a. Roles and responsibilities of all personnel associated with the warranty process, including points of contact and telephone numbers within the organizations of the Contractors, subcontractors, manufacturers or suppliers involved.

b. Furnish with each warranty the name, address, and telephone number of each of the guarantor's representatives nearest to the project location.

c. Listing and status of delivery of all Certificates of Warranty for extended warranty items, to include roofs, HVAC balancing, pumps, motors, transformers, and for all commissioned systems such as fire protection and alarm systems, sprinkler systems, lightning protection systems, etc.

d. A list for each warranted equipment, item, feature of construction or system indicating:

(1) Name of item.
(2) Model and serial numbers.
(3) Location where installed.
(4) Name and phone numbers of manufacturers or suppliers.
(5) Names, addresses and telephone numbers of sources of spare parts.
(6) Warranties and terms of warranty. Include one-year overall warranty of construction, including the starting date of warranty of construction. Items which have extended warranties must be indicated with separate warranty expiration dates.
(7) Cross-reference to warranty certificates as applicable.
(8) Starting point and duration of warranty period.
(9) Summary of maintenance procedures required to continue the warranty in force.
(10) Cross-reference to specific pertinent Operation and Maintenance manuals.
(11) Organization, names and phone numbers of persons to call for warranty service.

CONFORMED

(12) Typical response time and repair time expected for various warranted equipment.

e. The Contractor's plans for attendance at the 4 and 9 month post-construction warranty inspections conducted by the Government.

f. Procedure and status of tagging of all equipment covered by extended warranties.

g. Copies of instructions to be posted near selected pieces of equipment where operation is critical for warranty and/or safety reasons.

1.3.2 Performance Bond

The Contractor's Performance Bond must remain effective throughout the construction period.

a. In the event the Contractor fails to commence and diligently pursue any construction warranty work required, the Contracting Officer will have the work performed by others, and after completion of the work, will charge the remaining construction warranty funds of expenses incurred by the Government while performing the work, including, but not limited to administrative expenses.

b. In the event sufficient funds are not available to cover the construction warranty work performed by the Government at the Contractor's expense, the Contracting Officer will have the right to recoup expenses from the bonding company.

c. Following oral or written notification of required construction warranty repair work, respond in a timely manner. Written verification will follow oral instructions. Failure of the Contractor to respond will be cause for the Contracting Officer to proceed against the Contractor.

1.3.3 Pre-Warranty Conference

Prior to contract completion, and at a time designated by the Contracting Officer, meet with the Contracting Officer to develop a mutual understanding with respect to the requirements of this section. Communication procedures for Contractor notification of construction warranty defects, priorities with respect to the type of defect, reasonable time required for Contractor response, and other details deemed necessary by the Contracting Officer for the execution of the construction warranty will be established/reviewed at this meeting. In connection with these requirements and at the time of the Contractor's quality control completion inspection, furnish the name, telephone number and address of a licensed and bonded company which is authorized to initiate and pursue construction warranty work action on behalf of the Contractor. This point of contact will be located within the local service area of the warranted construction, be continuously available, and be responsive to Government inquiry on warranty work action and status. This requirement does not relieve the Contractor of any of its responsibilities in connection with other portions of this provision.

1.3.4 Warranty Tags

At the time of installation, tag each warranted item with a durable, oil and water resistant tag approved by the Contracting Officer. Attach each

CONFORMED

tag with a copper wire and spray with a silicone waterproof coating. Also, submit two record copies of the warranty tags showing the layout and design. The date of acceptance and the QC signature must remain blank until the project is accepted for beneficial occupancy. Show the following information on the tag.

Type of product/material	
Model number	
Serial number	
Contract number	
Warranty period from/to	
Inspector's signature	
Construction Contractor	
Address	
Telephone number	
Warranty contact	
Address	
Telephone number	
Warranty response time priority code	
WARNING - PROJECT PERSONNEL TO PERFORM ONLY OPERATIONAL MAINTENANCE DURING THE WARRANTY PERIOD.	

1.4 OPERATION AND MAINTENANCE MANUALS

Submit 6 copies of the project operation and maintenance manuals 30 calendar days prior to testing the system involved. Update and resubmit data for final approval no later than 30 calendar days prior to contract completion.

1.4.1 Configuration

Operation and Maintenance Manuals must be consistent with the manufacturer's standard brochures, schematics, printed instructions, general operating procedures, and safety precautions. Bind information in manual format and grouped by technical sections. Test data must be legible and of good quality. Light-sensitive reproduction techniques are acceptable provided finished pages are clear, legible, and not subject to fading. Pages for vendor data and manuals must have 0.3937-inch holes and be bound in 3-ring, loose-leaf binders. Organize data by separate index and tabbed sheets, in a loose-leaf binder. Binder must lie flat with printed sheets that are easy to read. Caution and warning indications must be clearly labeled.

CONFORMED

1.4.2 Training and Instruction

Submit classroom and field instructions in the operation and maintenance of systems equipment where required by the technical provisions. These services must be directed by the Contractor, using the manufacturer's factory-trained personnel or qualified representatives. Contracting Officer will be given 7 calendar days written notice of scheduled instructional services. Instructional materials belonging to the manufacturer or vendor, such as lists, static exhibits, and visual aids, must be made available to the Contracting Officer.

1.5 CLEANUP

Leave premises "broom clean." Clean interior and exterior glass surfaces exposed to view; remove temporary labels, stains and foreign substances; polish transparent and glossy surfaces; vacuum carpeted and soft surfaces. Clean equipment and fixtures to a sanitary condition. Replace filters of operating equipment. Clean debris from roofs, gutters, downspouts and drainage systems. Sweep paved areas and rake clean landscaped areas. Remove waste and surplus materials, rubbish and construction facilities from the site.

PART 2 PRODUCTS

Not Used

PART 3 EXECUTION

Not Used

-- End of Section --

CONFORMED

SECTION TABLE OF CONTENTS

DIVISION 02 - EXISTING CONDITIONS

SECTION 02 22 13

VIBRATION MONITORING

06/15

PART 1 GENERAL

1.1 SUBMITTALS
1.2 PERSONNEL QUALIFICATIONS
1.2.1 Vibration Control Specialist
1.2.2 Vibration Monitoring Technician(s)
1.2.3 Structural Inspection/Evaluation Engineer
1.2.4 Organizational Changes

PART 2 PRODUCTS (NOT APPLICABLE)

PART 3 EXECUTION

3.1 VIBRATION CONTROL PROGRAM
3.2 PRE-CONSTRUCTION STRUCTURAL SURVEY
3.3 VIBRATION CONTROL PLAN
3.4 DAILY INSTRUMENT LOGS
3.5 VIBRATION MONITORING REPORT
3.6 POST-CONSTRUCTION STRUCTURAL SURVEY

-- End of Section Table of Contents --

CONFORMED

SECTION 02 22 13

VIBRATION MONITORING
06/15

PART 1 GENERAL

1.1 SUBMITTALS

Government approval is required for submittals with a "G" designation; submittals not having a "G" designation are for information only. When used, a designation following the "G" designation identifies the office that will review the submittal for the Government. The following shall be submitted in accordance with Section 01 33 00 SUBMITTAL PROCEDURES:

SD-01 Preconstruction Submittals

Vibration Control Specialist; G
Vibration Control Specialist Alternate; G
Vibration Monitoring Technician; G
Structural Inspection/Evaluation Engineer; G

Within 5 calendar days after Notice of Award, submit qualifications for the Vibration Control Specialist and his Alternate; Vibration Monitoring Technician(s); and, Structural Inspection/Evaluation Engineer. Refer to qualifications in paragraph PERSONNEL QUALIFICATIONS below for each person.

Vibration Control Plan; G

Within 20 calendar days after Notice of Award and prior to mobilization of equipment, submit 3 copies of a Vibration Control Plan. Submit the Vibration Control Plan for compliance with the requirements in paragraph VIBRATION CONTROL PLAN below. The Plan shall include, but not be limited to, the following:

a. List of structures that are susceptible to vibration and noise damage, and existing structures that require monitoring of existing cracks.

b. Number of monitors (seismographs, strain gauges, movement gauges, and noise monitors, for example) required for the project and location of monitors that will operate simultaneously in each work area.

c. Calibration data for each seismograph, strain gauge, movement gauge, and noise monitor that will be used for the project. Calibrations shall be current, not older than one year, and follow the manufacturer's recommended procedures.

d. List of methods and procedures to reduce ground and noise vibrations induced by construction activities to below the pre-determined maximum allowable vibration level for the designated vibration sensitive structure(s); i.e., reducing

CONFORMED

equipment speed, changing fill placement method, reducing equipment size, and using manual labor.

e. Plan for each work area showing the proposed construction equipment in the area, the description of susceptible structure(s) in the work area, monitors in the work area, and the list of methods and procedures in subparagraph d above.

f. The minimum safe working distance that vibration and noise producing equipment may operate from each vibration and noise sensitive structure(s).

g. The maximum allowable ground and noise vibration level and movement gage distance that is permissible without causing threshold damage to each vibration and noise sensitive structure(s) and strain/movement gauge locations.

SD-06 Test Reports

Vibration Monitoring Report; G

Submit a Vibration Monitoring Report every 2 weeks for compliance with the requirements in paragraph VIBRATION MONITORING REPORT below. Submit the Vibration Monitoring Report and the Daily Instrument Logs concurrently.

Daily Instrument Logs; G

Submit the Daily Instrument Logs every 2 week for compliance with the requirements in paragraph DAILY INSTRUMENT LOGS below. Submit the Daily Instrument Logs and the Vibration Monitoring Report concurrently.

Post-Construction Structural Survey; G

Submit 3 copies of the Post-Construction Structural Survey within 15 calendar days after completion of the inspection. Submit the Post-Construction Structural Survey for compliance with the requirements in paragraph POST-CONSTRUCTION STRUCTURAL SURVEY below.

1.2 PERSONNEL QUALIFICATIONS

1.2.1 Vibration Control Specialist

The Vibration Control Specialist shall have a background in structural and/or geotechnical engineering, have a minimum of three years of demonstrated experience in vibration monitoring and related work, and be a registered professional engineer or registered professional geologist in the State of California. The vibration control specialist alternate may serve in the event of the Vibration Control Specialist's absence. Periods of absence shall not exceed one week at any one time and not more than fifteen workdays during a calendar year. The requirements for the alternate are the same as for the Vibration Control Specialist. The Vibration Control Specialist shall be designated in the Vibration Control Plan.

CONFORMED

1.2.2 Vibration Monitoring Technician(s)

Personnel responsible for operation, maintenance and calibration of seismographs, movement gauges, and noise monitors shall have a minimum of three years of demonstrated experience in vibration monitoring and related work in the State of California.

1.2.3 Structural Inspection/Evaluation Engineer

Structural inspections shall be performed by professional structural engineers registered in the State of California with a minimum of three years of demonstrated experience in structural condition inspections. The Structural Inspection Engineer shall have responsibility for pre-construction and post-construction structural surveys. The Structural Inspection Engineer shall be designated in the Vibration Control Plan.

1.2.4 Organizational Changes

When it is necessary to make changes to personnel, resubmit qualifications in accordance with paragraph SUBMITTALS above.

PART 2 PRODUCTS (NOT APPLICABLE)

PART 3 EXECUTION

3.1 VIBRATION CONTROL PROGRAM

Implement a program that protects existing building structures from damages that result from construction equipment operations and vibrations. The purpose of the program is to avoid damages and potential claims that allege damages were caused by construction activities. The Contractor is responsible to document pre-existing conditions, to avoid damaging existing structures that were determined to be susceptible to vibration damage, and to avoid damaging existing structures that were not determined to be susceptible to vibration damage; related responsibilities include inspection, damage claims, and work stoppage that results from monitoring.

The Contractor's attention is called to Clauses PERMITS AND RESPONSIBILITIES and PROTECTION OF EXISTING VEGETATION, STRUCTURES, EQUIPMENT, UTILITIES AND IMPROVEMENTS of Section 00700 CONTRACT CLAUSES in Volume 1 of this contract that define the Contractor's responsibilities. The Contractor shall process any claim arising from his operation; in particular, all property damage claims shall be acknowledged by the Contractor (or his agent) immediately, and the claimed damage inspected within 30 calendar days following initial notification, and processed to a conclusion (honored, denied, or compromised) within 90 calendar days after completion of the contract; but, in no case shall the claim(s) remain unresolved for a period exceeding six months.

3.2 PRE-CONSTRUCTION STRUCTURAL SURVEY

Inspect existing structures within 200 feet from the Upper Berryessa Creek improvements right-of-ways, existing buildings, bridges, access roadways, laydown and work limits as to their potential susceptibility to vibration damage from construction equipment induced ground and noise vibration, equipment and material weight. Visible structural and/or cosmetic damage to existing bridges, buildings, exterior walls, foundations, decks, roadways, paver stones, and bulkheads shall be documented by photographs, videos, sketches, and field notes.

CONFORMED

Factors to consider in determining potential susceptibility shall include but not be limited to: foundation design; foundation conditions; visible existing cracks, soils testing data; changes in structural loads and local water levels due to earthwork, placement of concrete structures and stone revetment; structural condition including construction materials; past damage history and existing stresses (known cracks shown on plans), magnitude, frequency, and duration of predicted vibrations from construction equipment and their loaded, operational weight, and distance from stone and concrete placement.

Inspect all existing structures, within 200 feet, from the Upper Berryessa Creek improvements right-of-ways, structure that are determined to be vibration sensitive. Any damage found shall be documented thoroughly by binders organized to exhibit photographs (supplemented with video as necessary), sketches of visible structural and/or cosmetic damage, and field notes. Photographs shall be at least 3- by 5-inch (or digital) and shall provide a detailed visual explanation of the damage. Include a reference scale in each close-up photograph. Sketches shall show the general damage location and extent.

All inspection items shall be indexed and cross-referenced and shall use the stationing and locations shown on the contract drawings. Include building, bridge and roadway names and addresses where applicable. Structural damage shall be additionally documented by measuring crack or damage size, width, and length. Every effort shall be made to inspect and document the condition of the structure's interior where the building has been determined to be extremely susceptible to vibration damage. Structure(s) determined not to be susceptible to vibration damage shall be noted as such.

All accessway, easements, right-of-ways and work areas shall also be surveyed. This survey shall include utilities, landscaping, surfaces, roads, sidewalks, and any stormwater outfalls.

3.3 VIBRATION CONTROL PLAN

Use the results of the Pre-Construction Structural Survey to develop the Vibration Control Plan. The Plan shall include procedures to monitor vibration and noise sensitive structures, adjust daily mobilization and demobilization activities, and alter earthwork, stone and concrete placement operations. The Plan shall include the appropriate tolerable ground vibration level and noise vibration level for each structure that has been determined to be susceptible to vibration damage. Should ground or noise vibrations equal or exceed the pre-determined maximum vibration level(s), construction operations shall be halted and corrective measures taken in accordance with the approved Plan.

The minimum safe working distance that vibration producing equipment may operate from each vibration sensitive structure shall be documented in the Plan. The maximum allowable ground and noise vibration level that is permissible without causing threshold damage to each vibration sensitive structure shall be documented in the Plan. Threshold damage is defined as the occurrence of cosmetic damage.

Each seismograph and/or noise monitor shall have the capability to measure peak particle velocity and frequency and shall be equipped with an alarm system to alert the on-site Vibration Control Specialist that ground vibrations are approaching the maximum tolerable ground vibration level.

CONFORMED

Strain and movement gauges shall be implemented and monitored at critical stress cracks along all buildings, roadways, and bridge structures. Alarms shall be installed. Strain and movement gage activity shall be monitored and reported under the same conditions as the vibration and noise monitors.

The Contractor's personnel responsible for implementation of the Plan is hereinafter called Vibration Control Specialist. The Vibration Control Specialist shall be on the site during mobilization, demobilization and operation of earthwork, stone and concrete placement equipment.

3.4 DAILY INSTRUMENT LOGS

Daily instrument logs shall document satisfactory performance of the equipment during monitoring periods. Strip charts shall be documented daily with monitoring station number, date, technician signature, and instrument serial number.

3.5 VIBRATION MONITORING REPORT

The monitoring report shall detail the daily activities of the vibration monitoring program. This report shall include, but not be limited to, locations of monitoring equipment; instrument serial number; date and times of readings; magnitude of vibration levels; a sketch and photograph (3- by 5-inch) of each monitoring station showing the relationship of the monitor to vibration sensitive structures; daily instrument logs; instructions transmitted to the Contractor's personnel regarding the modification or stoppage of work operations to keep vibrations below the allowable levels; description of complaint(s); and, any other information pertinent to the vibration monitoring program.

3.6 POST-CONSTRUCTION STRUCTURAL SURVEY

Immediately after completion of work, conduct a post-construction inspection of the structures previously inspected under the Pre-Construction Structural Survey. Documentation procedures shall be identical to those performed under the Pre-Construction Structural Survey.

Changes or deviations from the pre-construction inspection conditions in any structure shall be identified and described in the inspection documentation. All citizen complaints and remedies that occurred during all project activities shall be summarized and included in the report.

-- End of Section --

CONFORMED

SECTION TABLE OF CONTENTS

DIVISION 02 - EXISTING CONDITIONS

SECTION 02 41 00

DEMOLITION

05/10

PART 1 GENERAL

1.1 REFERENCES
1.2 PROJECT DESCRIPTION
1.2.1 General
1.2.2 Demolition
1.2.3 General Requirements
1.3 ITEMS TO REMAIN IN PLACE
1.3.1 Existing Construction Limits and Protection
1.3.2 Weather Protection
1.3.3 Trees
1.3.4 Utility Service
1.4 BURNING
1.5 SUBMITTALS
1.6 QUALITY ASSURANCE
1.6.1 Dust and Debris Control
1.7 PROTECTION
1.7.1 Traffic Control Signs
1.7.2 Protection of Personnel
1.8 RELOCATIONS
1.9 EXISTING CONDITIONS

PART 2 PRODUCTS

2.1 FILL MATERIAL

PART 3 EXECUTION

3.1 EXISTING FACILITIES TO BE REMOVED
3.1.1 Structures
3.1.2 Utilities and Related Equipment
3.1.2.1 General Requirements
3.1.2.2 Disconnecting Existing Utilities
3.1.3 Chain Link Fencing
3.1.4 Paving and Slabs
3.1.5 Masonry
3.1.6 Concrete
3.1.7 Patching
3.2 CONCURRENT EARTH-MOVING OPERATIONS
3.3 DISPOSITION OF MATERIAL
3.3.1 Title to Materials
3.3.2 Unsalvageable and Non-Recyclable Material
3.4 CLEANUP
3.5 DISPOSAL OF REMOVED MATERIALS
3.5.1 Regulation of Removed Materials
3.5.2 Burning on Government Property

CONFORMED

3.5.3 Removal to Spoil Areas on Government Property
3.5.4 Removal from Government Property
3.6 REUSE OF SALVAGED ITEMS

-- End of Section Table of Contents --

CONFORMED

SECTION 02 41 00

DEMOLITION
05/10

PART 1 GENERAL

1.1 REFERENCES

The publications listed below form a part of this specification to the extent referenced. The publications are referred to within the text by the basic designation only.

AMERICAN SOCIETY OF SAFETY ENGINEERS (ASSE/SAFE)

ASSE/SAFE A10.6	(2006) Safety Requirements for Demolition Operations

U.S. ARMY CORPS OF ENGINEERS (USACE)

EM 385-1-1	(2014) Safety and Health Requirements Manual

U.S. NATIONAL ARCHIVES AND RECORDS ADMINISTRATION (NARA)

40 CFR 61	National Emission Standards for Hazardous Air Pollutants

1.2 PROJECT DESCRIPTION

1.2.1 General

The work shall consist of demolition of storm drain outlet structures, a portion of the Ames Bridge concrete and metal barrier, UPRR trestle bridge, concrete slab at Los Coches bridge, concrete channel sections, and other miscellaneous items throughout the project site. All demolished items shall be removed from the project site and disposed of at acceptable offsite locations.

1.2.2 Demolition

Prepare a Demolition Plan and submit proposed salvage, demolition, and removal and offsite disposal procedures for approval before work is started. Include in the plan procedures for careful removal and disposition of materials specified to be salvaged, coordination with other work in progress, a disconnection schedule of utility services, and a detailed description of methods and equipment to be used for each operation and of the sequence of operations. Coordinate with Waste Management Plan. Provide procedures for safe conduct of the work in accordance with EM 385-1-1.

1.2.3 General Requirements

All work adjacent to the UPRR property requires a signed (1) agreement for channel construction and maintenance and (2) a right of entry agreement. A copy of these two agreements are available in Appendix J.

CONFORMED

Do not begin demolition until authorization is received from the Contracting Officer. Remove rubbish and debris from the project site; do not allow accumulations. The work includes demolition, salvage of identified items and materials, and removal of resulting rubbish and debris. Remove rubbish and debris from Government property daily, unless otherwise directed. Store materials that cannot be removed daily in areas specified by the Contracting Officer. In the interest of occupational safety and health, perform the work in accordance with EM 385-1-1, Section 23, Demolition, and other applicable Sections.

1.3 ITEMS TO REMAIN IN PLACE

Take necessary precautions to avoid damage to existing items to remain in place, to be reused, or to remain the property of the Government. Repair or replace damaged items as approved by the Contracting Officer. Coordinate the work of this section with all other work indicated. Construct and maintain shoring, bracing, and supports as required. Ensure that structural elements are not overloaded. Increase structural supports or add new supports as may be required as a result of any cutting, removal, or demolition work performed under this contract. Do not overload structural elements.

1.3.1 Existing Construction Limits and Protection

Do not disturb existing construction beyond the extent indicated or necessary for installation of new construction. Provide temporary shoring and bracing for support of building components to prevent settlement or other movement. Provide protective measures to control accumulation and migration of dust and dirt in all work areas. Remove dust, dirt, and debris from work areas daily.

1.3.2 Weather Protection

For portions of the building to remain, protect building interior and materials and equipment from the weather at all times.

1.3.3 Trees

Protect trees within the project site which might be damaged during demolition or deconstruction, and which are indicated to be left in place, by a 6 foot high fence. Erect and secure fence a minimum of 5 feet from the trunk of individual trees or follow the outer perimeter of branches or clumps of trees. Replace any tree designated to remain that is damaged during the work under this contract with like-kind or as approved by the Contracting Officer.

1.3.4 Utility Service

Maintain existing utilities indicated to stay in service and protect against damage during demolition operations. Prior to start of work, the Contractor shall contact and coordinate with appropriate utility companies regarding any disconnect, modification or abandonment of an existing utility line or utility service which is in conflict with the proposed construction.

There are three unknown abandoned utilities pipelines located at the existing UPRR wooden bridge. They are one 8" steel conduit, one 2" metallic conduit, and one 1" plastic conduit. The SCVWD is currently

CONFORMED

investigating the owner of these utilities. If the utilities are not abandoned, relocation will be required and is considered Not-In-Contract.

1.4 BURNING

The use of burning at the project site for the disposal of refuse and debris will not be permitted.

1.5 SUBMITTALS

Government approval is required for submittals with a "G" designation; submittals not having a "G" designation are for information only. When used, a designation following the "G" designation identifies the office that will review the submittal for the Government. Submit the following in accordance with Section 01 33 00 SUBMITTAL PROCEDURES:

SD-01 Preconstruction Submittals

Demolition Plan; G
Existing Conditions

SD-07 Certificates

Notification; G

1.6 QUALITY ASSURANCE

Submit timely notification of demolition to Federal, State, regional, and local authorities in accordance with 40 CFR 61, Subpart M. Notify the local air pollution control district/agency and the Contracting Officer in writing 10 working days prior to the commencement of work in accordance with 40 CFR 61, Subpart M. Comply with federal, state, and local hauling and disposal regulations. In addition to the requirements of the "Contract Clauses," conform to the safety requirements contained in ASSE/SAFE A10.6. Comply with the Environmental Protection Agency requirements specified. Use of explosives will not be permitted.

1.6.1 Dust and Debris Control

Prevent the spread of dust and debris and avoid the creation of a nuisance in the surrounding area. Do not use water if it results in hazardous or objectionable conditions such as, but not limited to, ice, flooding, or pollution. Sweep adjacent streets as often as necessary to control the spread of dust and debris. The use of dry power sweeping in prohibited.

1.7 PROTECTION

1.7.1 Traffic Control Signs

a. Where pedestrian and driver safety is endangered in the area of removal work, use traffic barricades with flashing lights. Anchor barricades in a manner to prevent displacement by wind, jet or prop blast. Notify the Contracting Officer prior to beginning such work.

1.7.2 Protection of Personnel

Before, during and after the demolition work continuously evaluate the condition of the structure being demolished and take immediate action to protect all personnel working in and around the project site. No area,

CONFORMED

section, or other structural element will be allowed to be left standing without sufficient bracing, shoring, or lateral support to prevent collapse or failure while workmen remove debris or perform other work in the immediate area.

1.8 RELOCATIONS

Perform the removal and reinstallation of relocated items as indicated with workmen skilled in the trades involved. Repair or replace items to be relocated which are damaged by the Contractor with new undamaged items as approved by the Contracting Officer.

1.9 EXISTING CONDITIONS

Before beginning any demolition, survey the site and examine the drawings and specifications to determine the extent of the work. Record existing conditions in the presence of the Contracting Officer showing the condition of structures and other facilities adjacent to areas of alteration or removal. Photographs sized 4 inch will be acceptable as a record of existing conditions. Include in the record the elevation of the top of foundation walls, finish floor elevations, possible conflicting electrical conduits, plumbing lines, alarms systems, the location and extent of existing cracks and other damage and description of surface conditions that exist prior to before starting work. It is the Contractor's responsibility to verify and document all required outages which will be required during the course of work, and to note these outages on the record document. Submit survey results.

PART 2 PRODUCTS

2.1 FILL MATERIAL

a. Comply with excavating, backfilling, and compacting procedures for soils used as backfill material to fill basements, voids, depressions or excavations resulting from demolition or deconstruction of structures.

PART 3 EXECUTION

3.1 EXISTING FACILITIES TO BE REMOVED

Inspect and evaluate existing structures onsite for reuse. Existing construction scheduled to be removed for reuse shall be disassembled. Dismantled and removed materials are to be separated, set aside, and prepared as specified, and stored or delivered to a collection point for reuse, remanufacture, recycling, or other disposal, as specified. Materials shall be designated for reuse onsite whenever possible.

3.1.1 Structures

a. Remove existing structures indicated to be removed to 3 feet below grade. Remove sidewalks, curbs, gutters and street light bases as indicated.

b. Demolish structures in a systematic manner from the top of the structure to the ground. Complete demolition work above each tier or floor before the supporting members on the lower level are disturbed. Demolish concrete and masonry walls in small sections.

c. Locate demolition equipment throughout the structure and remove

CONFORMED

materials so as to not impose excessive loads to supporting walls, floors, or framing.

3.1.2 Utilities and Related Equipment

3.1.2.1 General Requirements

Do not interrupt existing utilities serving occupied or used facilities, except when authorized in writing by the Contracting Officer. Do not interrupt existing utilities serving facilities occupied and used by the Government except when approved in writing and then only after temporary utility services have been approved and provided. Do not begin demolition work until all utility disconnections have been made. Shut off and cap utilities for future use, as indicated.

3.1.2.2 Disconnecting Existing Utilities

Remove existing utilities as indicated and terminate in a manner conforming to the nationally recognized code covering the specific utility and approved by the Contracting Officer. When utility lines are encountered but are not indicated on the drawings, notify the Contracting Officer prior to further work in that area. Remove meters and related equipment and deliver to a location in accordance with instructions of the Contracting Officer.

3.1.3 Chain Link Fencing

Remove chain link fencing, gates and other related salvaged items scheduled for removal and transport to designated areas. Remove gates as whole units. Cut chain link fabric to 25 foot lengths and store in rolls off the ground.

3.1.4 Paving and Slabs

Remove concrete and asphaltic concrete paving and slabs including aggregate base to a depth of 6 inches below new finish grade. Provide neat sawcuts at limits of pavement removal as indicated. Pavement and slabs designated to be recycled and utilized in this project shall be moved, ground and stored as directed by the Contracting Officer. Pavement and slabs not to be used in this project shall be removed from the Installation at Contractor's expense.

3.1.5 Masonry

Sawcut and remove masonry so as to prevent damage to surfaces to remain. Where new masonry adjoins existing, the new work shall abut or tie into the existing construction as indicated. Provide square, straight edges and corners where existing masonry adjoins new work and other locations.

3.1.6 Concrete

Saw concrete along straight lines to a depth of a minimum 2 inch. Make each cut in walls perpendicular to the face and in alignment with the cut in the opposite face. Break out the remainder of the concrete provided that the broken area is concealed in the finished work, and the remaining concrete is sound. At locations where the broken face cannot be concealed, grind smooth or saw cut entirely through the concrete. Salvage and/or recycle removed concrete.

CONFORMED

3.1.7 Patching

Where removals leave holes and damaged surfaces exposed in the finished work, patch and repair these holes and damaged surfaces to match adjacent finished surfaces, using on-site materials when available. Where new work is to be applied to existing surfaces, perform removals and patching in a manner to produce surfaces suitable for receiving new work. Finished surfaces of patched area shall be flush with the adjacent existing surface and shall match the existing adjacent surface as closely as possible as to texture and finish. Patching shall be as specified and indicated, and shall include:

a. Concrete and Masonry: Completely fill holes and depressions, left as a result of removals in existing masonry walls to remain, with an approved masonry patching material, applied in accordance with the manufacturer's printed instructions.

3.2 CONCURRENT EARTH-MOVING OPERATIONS

Do not begin excavation, filling, and other earth-moving operations that are sequential to demolition or deconstruction work in areas occupied by structures to be demolished or deconstructed until all demolition and deconstruction in the area has been completed and debris removed. Fill holes, open basements and other hazardous openings.

3.3 DISPOSITION OF MATERIAL

3.3.1 Title to Materials

Except for salvaged items specified in related Sections, and for materials or equipment scheduled for salvage, all materials and equipment removed and not reused or salvaged, shall become the property of the Contractor and shall be removed from Government property. Title to materials resulting from demolition, and materials and equipment to be removed, is vested in the Contractor upon approval by the Contracting Officer of the Contractor's demolition, and removal procedures, and authorization by the Contracting Officer to begin demolition and deconstruction. The Government will not be responsible for the condition or loss of, or damage to, such property after contract award. Showing for sale or selling materials and equipment on site is prohibited.

3.3.2 Unsalvageable and Non-Recyclable Material

Dispose of unsalvageable and non-recyclable combustible material off the site.

3.4 CLEANUP

Remove debris and rubbish from basement and similar excavations. Remove and transport the debris in a manner that prevents spillage on streets or adjacent areas. Apply local regulations regarding hauling and disposal.

3.5 DISPOSAL OF REMOVED MATERIALS

3.5.1 Regulation of Removed Materials

Dispose of debris, rubbish, scrap, and other nonsalvageable materials resulting from removal operations with all applicable federal, state and local regulations as contractually specified in the Waste Management Plan.

CONFORMED

Storage of removed materials on the project site is prohibited.

3.5.2 Burning on Government Property

Burning of materials removed from demolished structures will not be permitted on Government property.

3.5.3 Removal to Spoil Areas on Government Property

Transport noncombustible materials removed from demolition and deconstruction structures to designated spoil areas on Government property.

3.5.4 Removal from Government Property

Transport waste materials removed from demolished and deconstructed structures, except waste soil, from Government property for legal disposal. Dispose of waste soil as directed.

3.6 REUSE OF SALVAGED ITEMS

Recondition salvaged materials and equipment designated for reuse before installation. Replace items damaged during removal and salvage operations or restore them as necessary to usable condition.

-- End of Section --

CONFORMED

SECTION TABLE OF CONTENTS

DIVISION 03 - CONCRETE

SECTION 03 11 13.00 10

STRUCTURAL CAST-IN-PLACE CONCRETE FORMING

05/14

PART 1 GENERAL

1.1 REFERENCES
1.2 SUBMITTALS
1.3 QUALITY ASSURANCE
1.4 DELIVERY, STORAGE, AND HANDLING

PART 2 PRODUCTS

2.1 SYSTEM DESCRIPTION
2.2 FORM MATERIALS
2.2.1 Formwork
2.2.2 Fiber Voids
2.3 FIBER VOID RETAINERS
2.3.1 Polystyrene Rigid Insulation
2.3.2 Precast Concrete

PART 3 EXECUTION

3.1 INSTALLATION
3.1.1 Formwork
3.1.2 Fiber Voids
3.1.3 Fiber Void Retainers
3.2 INSPECTION

-- End of Section Table of Contents --

CONFORMED

SECTION 03 11 13.00 10

STRUCTURAL CAST-IN-PLACE CONCRETE FORMING
05/14

PART 1 GENERAL

1.1 REFERENCES

The publications listed below form a part of this specification to the extent referenced. The publications are referred to within the text by the basic designation only.

AMERICAN CONCRETE INSTITUTE INTERNATIONAL (ACI)

ACI 117	(2010; Errata 2011) Specifications for Tolerances for Concrete Construction and Materials and Commentary
ACI 301	(2010; Errata 2015) Specifications for Structural Concrete
ACI 347	(2004; Errata 2008; Errata 2012) Guide to Formwork for Concrete

ASTM INTERNATIONAL (ASTM)

ASTM C578	(2014a) Standard Specification for Rigid, Cellular Polystyrene Thermal Insulation

1.2 SUBMITTALS

Government approval is required for submittals with a "G" designation; submittals not having a "G" designation are for information only. When used, a designation following the "G" designation identifies the office that will review the submittal for the Government. Submit the following in accordance with Section 01 33 00 SUBMITTAL PROCEDURES:

SD-02 Shop Drawings

Formwork; G
Form Removal Schedule; G

SD-03 Product Data

Form Materials

SD-04 Samples

Sample Panels; G
Fiber Voids; G

SD-05 Design Data

Calculations

CONFORMED

SD-06 Test Reports

Inspection

SD-07 Certificates

Fiber Voids

1.3 QUALITY ASSURANCE

Provide Sample Panels of sufficient size to contain joints and not less than 6 feet long and 4 feet wide. The panels shall be of typical wall thickness and constructed containing the full allocation of reinforcing steel that will be used in the structure, with the forming system that duplicates in every detail the one that will be used in construction of the structure. Use the same concrete mixture proportion and materials, the same placement techniques and equipment, and the same finishing techniques and timing that are planned for the structure. Construction of a finish SF-3.0 will not be permitted until sample panels have been approved. Protect sample panels from construction operations in a manner to protect approved finish, and are not to be removed until all surface finish SF-3.0 concrete has been accepted. After shop drawings have been reviewed, submit sample panels for a surface finish SF-3.0 with applied architectural treatment; build panels on the project site where directed.

1.4 DELIVERY, STORAGE, AND HANDLING

Store fiber voids above ground level in a dry location. Keep fiber voids dry until installed and overlaid with concrete.

PART 2 PRODUCTS

2.1 SYSTEM DESCRIPTION

The design, engineering, and construction of the formwork is the responsibility of the Contractor. Design formwork in accordance with methodology of ACI 347 for anticipated loads, lateral pressures, and stresses, and capable of withstanding the pressures resulting from placement and vibration of concrete. Comply with the tolerances specified in Section 03 31 01.00 10 CAST-IN-PLACE CONCRETE FOR CIVIL WORK, paragraph CONSTRUCTION TOLERANCES. However, for surfaces with an ACI Class A surface designation, limit the allowable deflection for facing material between studs, for studs between walers and walers between bracing to 0.0025 times the span. Design the formwork as a complete system with consideration given to the effects of cementitious materials and mixture additives such as fly ash, cement type, plasticizers, accelerators, retarders, air entrainment, and others. Monitor the adequacy of formwork design and construction prior to and during concrete placement as part of the Contractor's approved Quality Control Plan. Submit design analysis and calculations for form design and methodology used in the design. Submit at least 15 days either before fabrication on site or before delivery of prefabricated forms.

2.2 FORM MATERIALS

Submit manufacturer's data, including literature describing form materials, accessories, and form releasing agents.

CONFORMED

2.2.1 Formwork

Comply with ACI 301 Section 2. Provide for surfaces not exposed to public view a surface finish SF-1.0. Provide for surfaces exposed to public view a surface finish SF-3.0. Patch holes and defects in accordance with ACI 301. Submit form removal schedule indicating element and minimum length of time for form removal.

2.2.2 Fiber Voids

Fiber voids must be the product of a reputable manufacturer regularly engaged in the commercial production of fiber voids. Construct the voids of double faced, corrugated fiberboard. Fabricate the corrugated fiberboard of standard kraft paper liners, impregnated with paraffin, and laminated with moisture resistant adhesive, with a board strength of 275 psi. Voids which are impregnated with paraffin after construction, in lieu of being constructed with paraffin impregnated fiberboard, are acceptable. Design voids to support not less than 1000 psf. To prevent separation during concrete placement fiber voids, assemble with steel or plastic banding at 4 feet on center maximum, or by adequate stapling or gluing as recommended by the manufacturer. Fiber voids placed under concrete slabs and that are 8 inches in depth may be heavy duty "waffle box" type, constructed of paraffin impregnated corrugated fiberboard. Submit one sample unit of fiber voids prior to installation of the voids and certificates attesting that fiber voids conform to the specified requirements.

2.3 FIBER VOID RETAINERS

2.3.1 Polystyrene Rigid Insulation

Polystyrene rigid insulation must conform to ASTM C578, Type V, VI, or VII, square edged. Size: 1-1/2 inches thick by 16 inches in height by 3 feet in length, unless otherwise indicated.

2.3.2 Precast Concrete

Precast concrete units must have a compressive strength of not less than 2500 psi, reinforced with 6 inch by 6 inch by W1.4 WWF wire mesh, and 12 inches (height) by 3 feet (length) by 1-5/8 inches (thickness) in size unless indicated.

PART 3 EXECUTION

3.1 INSTALLATION

3.1.1 Formwork

Comply with ACI 301 Section 2 with surface tolerances in accordance with ACI 117.

3.1.2 Fiber Voids

Place voids on a smooth firm dry bed of suitable material, to avoid being displaced vertically, and set tight, with no buckled cartons, in order that horizontal displacement cannot take place. Seal the ends of each section of void by dipping in paraffin, with any additional cutting of voids at the jobsite field dip in the same type of sealer, unless liners and flutes are completely impregnated with paraffin. Prior to placing reinforcement,

CONFORMED

cover the entire formed area for slabs with a 4 x 8 feet minimum flat sheets of fiber void corrugated fiberboard. Seal joints with a moisture resistant tape having a minimum width of 3 inches. If voids are destroyed or damaged and are not capable of supporting the design load, replace prior to placing of concrete.

3.1.3 Fiber Void Retainers

Install fiber void retainers, continuously, on both sides of fiber voids placed under grade beams in order to retain the cavity after the fiber voids biodegrade.

3.2 INSPECTION

Inspect forms and embedded items in sufficient time prior to each concrete placement to certify to the Contracting Officer that they are ready to receive concrete. Report the results of each inspection in writing. Submit field inspection reports for concrete forms and embedded items.

-- End of Section --

CONFORMED

SECTION TABLE OF CONTENTS

DIVISION 03 - CONCRETE

SECTION 03 15 00.00 10

CONCRETE ACCESSORIES

05/14

PART 1 GENERAL

1.1 REFERENCES
1.2 SUBMITTALS
1.3 DELIVERY, STORAGE, AND HANDLING

PART 2 PRODUCTS

2.1 CONTRACTION JOINT STRIPS
2.2 PREFORMED EXPANSION JOINT FILLER
2.3 SEALANT
2.3.1 Preformed Polychloroprene Elastomeric Type
2.3.2 Lubricant for Preformed Compression Seals
2.3.3 Field-Molded Type
2.4 WATERSTOPS
2.4.1 Flexible Metal
2.4.2 Rigid Metal
2.4.3 Non-Metallic Materials
2.5 TESTS, INSPECTIONS, AND VERIFICATIONS
2.5.1 Materials Tests
2.5.1.1 Field-Molded Sealants
2.5.1.2 Non-Metallic Waterstops
2.5.2 Splicing Waterstops
2.5.2.1 Procedure and Performance Qualifications
2.5.2.2 Non-Metallic Waterstops
2.5.2.3 Metal Waterstops

PART 3 EXECUTION

3.1 INSTALLATION
3.1.1 Contraction Joints
3.1.1.1 Joint Strips
3.1.1.2 Sawed Joints
3.1.1.3 Bond Breaker
3.1.2 Expansion Joints
3.1.3 Joint Sealer
3.1.3.1 Joints With Preformed Compression Seals
3.1.3.2 Joints With Field-Molded Sealant
3.2 WATERSTOPS, INSTALLATION AND SPLICES
3.2.1 Copper And Stainless Steel
3.2.2 Flat Steel
3.2.3 Non-Metallic
3.2.3.1 Rubber Waterstop
3.2.3.2 Polyvinyl Chloride Waterstop
3.2.3.3 Quality Assurance
3.2.4 Non-Metallic Hydrophilic Waterstop Installation

CONFORMED

3.2.5 Preformed Plastic Adhesive Installation
3.3 CONSTRUCTION JOINTS

-- End of Section Table of Contents --

CONFORMED

SECTION 03 15 00.00 10

CONCRETE ACCESSORIES
05/14

PART 1 GENERAL

1.1 REFERENCES

The publications listed below form a part of this specification to the extent referenced. The publications are referred to within the text by the basic designation only.

AMERICAN HARDBOARD ASSOCIATION (AHA)

AHA A135.4	(1995; R 2004) Basic Hardboard

ASME INTERNATIONAL (ASME)

ASME BPVC SEC IX	(2010) BPVC Section IX-Welding and Brazing Qualifications

ASTM INTERNATIONAL (ASTM)

ASTM A1011/A1011M	(2014) Standard Specification for Steel, Sheet, and Strip, Hot-Rolled, Carbon, Structural, High-Strength Low-Alloy and High-Strength Low-Alloy with Improved Formability and Ultra-High Strength
ASTM A109/A109M	(2014) Standard Specification for Steel, Strip, Carbon (0.25 Maximum Percent), Cold-Rolled
ASTM A167	(2011) Standard Specification for Stainless and Heat-Resisting Chromium-Nickel Steel Plate, Sheet, and Strip
ASTM A480/A480M	(2014b) Standard Specification for General Requirements for Flat-Rolled Stainless and Heat-Resisting Steel Plate, Sheet, and Strip
ASTM B152/B152M	(2013) Standard Specification for Copper Sheet, Strip, Plate, and Rolled Bar
ASTM B370	(2012) Standard Specification for Copper Sheet and Strip for Building Construction
ASTM C919	(2012) Use of Sealants in Acoustical Applications
ASTM C920	(2014a) Standard Specification for Elastomeric Joint Sealants

CONFORMED

ASTM D1751	(2004; E 2013; R 2013) Standard Specification for Preformed Expansion Joint Filler for Concrete Paving and Structural Construction (Nonextruding and Resilient Bituminous Types)
ASTM D1752	(2004a; R 2013) Standard Specification for Preformed Sponge Rubber Cork and Recycled PVC Expansion
ASTM D2628	(1991; R 2011) Standard Specification for Preformed Polychloroprene Elastomeric Joint Seals for Concrete Pavements
ASTM D2835	(1989; R 2012) Lubricant for Installation of Preformed Compression Seals in Concrete Pavements
ASTM D471	(2012a) Standard Test Method for Rubber Property - Effect of Liquids
ASTM D5249	(2010) Backer Material for Use with Cold-and Hot-Applied Joint Sealants in Portland-Cement Concrete and Asphalt Joints

U.S. ARMY CORPS OF ENGINEERS (USACE)

COE CRD-C 513	(1974) Corps of Engineers Specifications for Rubber Waterstops
COE CRD-C 572	(1974) Corps of Engineers Specifications for Polyvinylchloride Waterstops

1.2 SUBMITTALS

Government approval is required for submittals with a "G" designation; submittals not having a "G" designation are for information only. When used, a designation following the "G" designation identifies the office that will review the submittal for the Government. Submit the following in accordance with Section 01 33 00 SUBMITTAL PROCEDURES:

SD-02 Shop Drawings

Waterstops; G

SD-03 Product Data

Preformed Expansion Joint Filler
Sealant
Waterstops

SD-04 Samples

Lubricant for Preformed Compression Seals
Field-Molded Type
Waterstops
Splicing Waterstops; G

SD-07 Certificates

CONFORMED

Preformed Expansion Joint Filler
Sealant
Waterstops

1.3 DELIVERY, STORAGE, AND HANDLING

Protect material delivered and placed in storage off the ground from moisture, dirt, and other contaminants. Deliver sealants in the manufacturer's original unopened containers. Remove sealants from the site whose shelf life has expired.

PART 2 PRODUCTS

2.1 CONTRACTION JOINT STRIPS

Use 1/8 inch thick tempered hardboard contraction joint strips conforming to AHA A135.4, Class 1. In lieu of hardboard strips, rigid polyvinylchloride (PVC) or high impact polystyrene (HIPS) insert strips specifically designed to induce controlled cracking in slabs on grade may be used. Such insert strips must have removable top section.

2.2 PREFORMED EXPANSION JOINT FILLER

Use preformed expansion joint filler material conforming to ASTM D1751 or ASTM D1752, Type I, or resin impregnated fiberboard conforming to the physical requirements of ASTM D1752. Submit certified manufacturer's test reports for premolded expansion joint filler strips, compression seals and lubricant, and metallic waterstops to verify compliance with applicable specification. Unless otherwise indicated, filler material must be 3/8 inch thick and of a width applicable for the joint formed. Backer material, when required, must conform to ASTM D5249.

2.3 SEALANT

Joint sealant conforming to the following:

2.3.1 Preformed Polychloroprene Elastomeric Type

ASTM D2628.

2.3.2 Lubricant for Preformed Compression Seals

ASTM D2835. Submit a piece not less than 9 ft of 1 inch nominal width or wider seal or a piece not less than 12 ft of compression seal less than 1 inch nominal width. Provide one quart of lubricant.

2.3.3 Field-Molded Type

ASTM C920. Use Type M, Grade P or NS, Class 25, Use T sealant for horizontal joints. Type M, Grade NS, Class 25, Use NT for vertical joints. Except, the joint sealant that will be submerged underwater for part or all of its service life must meet the requirements of USE I. Use polyethylene tape, coated paper, metal foil or similar type materials as bond breaker. The back-up material must be compressible, non-shrink, nonreactive with sealant, and non-absorptive material type such as extruded butyl or polychloroprene rubber. Submit 1 gallon of field-molded sealant and 1 quart of primer (when primer is recommended by the sealant manufacturer) identified to indicate manufacturer, type of material,

CONFORMED

quantity, and shipment or lot represented.

2.4 WATERSTOPS

Submit a sample of each material consisting of a piece not less than 12 inches long cut from each 200 feet of finished waterstop furnished, but not less than a total of 4 linear feet of each type and size furnished. For spliced segments of waterstops to be installed in the work, furnish one spliced sample of each size and type for every 50 splices made in the factory and every 10 splices made at the job site for inspection and testing. Make the spliced samples using straight run pieces with the splice located at the mid-length of the sample and finished as required for the installed waterstop; the total length of each spliced sample not less than 12 inches. Submit waterstop materials and splice samples for inspection and testing identified to indicate manufacturer, type of material, size and quantity of material and shipment represented. Submit a shop drawing of the waterstops showing the placement and configuration.

2.4.1 Flexible Metal

Copper waterstops conforming to ASTM B152/B152M and ASTM B370, O60 soft anneal temper and 20 oz mass per sq ft sheet thickness. Stainless steel waterstops conforming to ASTM A167 and ASTM A480/A480M, UNS S30453 (Type 304L), and 0.0375 inch (20 gauge) thick strip.

2.4.2 Rigid Metal

Flat steel waterstops conforming to ASTM A109/A109M, No. 2 (half hard) temper, No. 2 edge, No. 1 (matte or dull) finish or ASTM A1011/A1011M, Grade 40.

2.4.3 Non-Metallic Materials`

Manufacture non-metallic waterstops from a prime virgin resin; reclaimed material is not acceptable. The compound must contain plasticizers, stabilizers, and other additives to meet specified requirements. Rubber waterstops conforming to COE CRD-C 513. Polyvinylchloride waterstops conforming to COE CRD-C 572. Thermoplastic elastomeric rubber waterstops conforming to ASTM D471. Submit a piece not less than 12 inch long cut from each 200 ft of finished waterstop furnished, but not less than a total of 4 ft of each type, size, and lot furnished. One splice sample of each size and type for every 50 splices made in the factory and every 10 splices made at the job site. Make the splice samples using straight run pieces with the splice located at the mid-length of the sample and finished as required for the installed waterstop; the total length of each splice not less than 12 inches long.

2.5 TESTS, INSPECTIONS, AND VERIFICATIONS

2.5.1 Materials Tests

2.5.1.1 Field-Molded Sealants

Test samples of sealant and primer, when use of primer is recommended by the manufacturer, as required in paragraph FIELD-MOLDED TYPE, by and at the expense of the Government for compliance with paragraph FIELD-MOLDED TYPE. If the sample fails to meet specification requirements, provide new samples and the cost of retesting will be deducted from payments due the Contractor at a rate of $250 per sample.

CONFORMED

2.5.1.2 Non-Metallic Waterstops

Samples of materials and splices will be visually inspected and tested by and at the expense of the Government for compliance with COE CRD-C 513 or COE CRD-C 572 as applicable. If a sample fails to meet the specification requirements, provide new samples and the cost of retesting will be deducted from payments due the Contractor at the rate of $250 per material sample retested and $250 per spliced sample retested.

2.5.2 Splicing Waterstops

2.5.2.1 Procedure and Performance Qualifications

Demonstrate procedure and performance qualifications for splicing waterstops in the presence of the Contracting Officer. Submit procedures for splicing waterstops for approval.

2.5.2.2 Non-Metallic Waterstops

Demonstrate procedure and performance qualifications for splicing non-metallic waterstops by the manufacturer at the factory and the Contractor at the job site by each making three spliced samples of each size and type of finished waterstop.

2.5.2.3 Metal Waterstops

Demonstrate procedure and performance qualifications for splicing metal waterstops at the job site by the Contractor. The brazing procedure, brazers and brazing operators for splicing copper waterstops shall be qualified in accordance with Part QB (Brazing), Article XI (Brazing, General Requirements), paragraph QB-170 (Peel Tests) and other applicable requirements of Articles XI, XII, and XIII of ASME BPVC SEC IX. The welding procedure and welders for splicing stainless steel waterstops shall be qualified in accordance with the manufacturer's recommendations.

PART 3 EXECUTION

3.1 INSTALLATION

Provide joint locations and details, including materials and methods of installation of joint fillers and waterstops, as specified and indicated. In no case may any fixed metal be continuous through an expansion or contraction joint.

3.1.1 Contraction Joints

Contraction joints may be constructed by inserting tempered hardboard strips or rigid PVC or HIPS insert strips into the plastic concrete using a steel parting bar, when necessary, or by cutting the concrete with a saw after concrete has set. Make joints 1/8 inch to 3/16 inch wide and extend into the slab one-fourth the slab thickness, minimum, but not less than 1 inch.

3.1.1.1 Joint Strips

Provide strips of the required dimensions and as long as practicable. After the first floating, groove the concrete with a tool at the joint locations. Insert the strips in the groove and depress them until the top

CONFORMED

edge of the vertical surface is flush with the surface of the slab. Float and finish the slab as specified. Work the concrete adjacent to the joint the minimum necessary to fill voids and consolidate the concrete. Where indicated, saw out the top portion of the strip after the curing period to form a recess for sealer. Discard the removable section of PVC or HIPS strips and leave the insert in place. Maintain true alignment of the strips during insertion.

3.1.1.2 Sawed Joints

Saw joints early enough to prevent uncontrolled cracking in the slab, but late enough that this can be accomplished without appreciable spalling. Start cutting as soon as the concrete has hardened sufficiently to prevent raveling of the edges of the saw cut. Complete cutting before shrinkage stresses become sufficient to produce cracking. Use concrete sawing machines that are adequate in number and power, and with sufficient replacement blades to complete the sawing at the required rate. Cut joints to true alignment and in sequence of concrete placement. Remove sludge and cutting debris. Form reservoir for joint sealant.

3.1.1.3 Bond Breaker

Coat joints requiring a bond breaker with curing compound or with bituminous paint. Protect waterstops during application of bond breaking material to prevent them from being coated.

3.1.2 Expansion Joints

Use preformed expansion joint filler in expansion and isolation joints in slabs around columns and between slabs on grade and vertical surfaces where indicated. Extend the filler to the full slab depth, unless otherwise indicated. Neatly finish the edges of the joint with an edging tool of 1/8 inch radius, except where a resilient floor surface will be applied. Where the joint is to receive a sealant, install the filler strips at the proper level below the finished floor with a slightly tapered, dressed and oiled wood strip temporarily secured to the top to form a recess to the size shown on the drawings. Remove the wood strip after the concrete has set. Contractor may opt to use a removable expansion filler cap designed and fabricated for this purpose in lieu of the wood strip. Thoroughly clean the groove of laitance, curing compound, foreign materials, protrusions of hardened concrete, and any dust. If blowing out the groove use oil-free compressed air.

3.1.3 Joint Sealer

Fill sawed contraction joints and expansion joints in slabs with joint sealant, unless otherwise shown. Joint surfaces must be clean, dry, and free of oil or other foreign material which would adversely affect the bond between sealer and concrete. Apply joint sealer as recommended by the manufacturer of the sealer.

3.1.3.1 Joints With Preformed Compression Seals

Install compression seals with equipment capable of installing joint seals to the prescribed depth without cutting, nicking, twisting, or otherwise distorting or damaging the seal or concrete and with no more than 5 percent stretching of the seal. Cover the sides of the joint and, if necessary, the sides of the compression seal with a coating of lubricant. Coat butt joints with liberal applications of lubricant.

CONFORMED

3.1.3.2 Joints With Field-Molded Sealant

Do not seal joints when the sealant material, ambient air, or concrete temperature is less than 40 degrees F. When the sealants are meant to reduce the sound transmission characteristics of interior walls, ceilings, and floors follow the guidance provided in ASTM C919. Coat joints requiring a bond breaker with curing compound or with bituminous paint. Install bond breaker and back-up material where required. Prime joints and fill flush with joint sealant in accordance with the manufacturer's recommendations.

3.2 WATERSTOPS, INSTALLATION AND SPLICES

Install waterstops at the locations shown to form a continuous water-tight diaphragm. Make adequate provision to support and completely protect the waterstops during the progress of the work. Repair or replace any waterstop punctured or damaged. Protect exposed waterstops during application of form release agents to avoid being coated. Provide suitable guards to protect exposed projecting edges and ends of partially embedded waterstops from damage when concrete placement has been discontinued. Accomplish splices with certified trained personnel using approved equipment and procedures.

3.2.1 Copper And Stainless Steel

Splices in copper waterstops must be lap joints made by brazing. Weld splices in stainless steel waterstops using a TIG or MIG process utilizing a weld rod to match the stainless. All welds must not be annealed to maintain physical properties. Do not use carbon flame in the annealing process. Repair damaged waterstops by removing damaged portions and patching. Overlap patches a minimum of 1 inch onto undamaged portion of the waterstop.

3.2.2 Flat Steel

Splices in flat steel waterstops shall be properly aligned, butt welded, and cleaned of excessive material.

3.2.3 Non-Metallic

Fittings must be shop made using a machine specifically designed to mechanically weld the waterstop. Use a miter guide, proper fixturing (profile dependent), and portable power saw to miter cut the ends to be joined to ensure good alignment and contact between joined surfaces. Splice straight lengths by squaring the ends to be joined. Maintain continuity of the characteristic features of the cross section of the waterstop (for example, ribs, tabular center axis, protrusions) across the splice.

3.2.3.1 Rubber Waterstop

Vulcanize splices or make using cold bond adhesive as recommended by the manufacturer. Splices for TPE-R must be as specified for PVC.

3.2.3.2 Polyvinyl Chloride Waterstop

Make splices by heat sealing the adjacent waterstop edges together using a thermoplastic splicing iron utilizing a non-stick surface specifically

CONFORMED

designed for waterstop welding. Use the correct temperature to sufficiently melt without charring the plastic. Reform waterstops at splices with a remolding iron with ribs or corrugations to match the pattern of the waterstop. The spliced area, when cooled, must show no signs of separation, holes, or other imperfections when bent by hand in as sharp an angle as possible.

3.2.3.3 Quality Assurance

Edge welding will not be permitted. Compress or close centerbulbs when welding to non-centerbulb type. Waterstop splicing defects which are unacceptable include, but are not limited to the following: 1) Tensile strength less than 80 percent of parent section. 2) Free lap joints. 3) Misalignment of centerbulb, ribs, and end bulbs greater than 1/16 inch. 4) Misalignment which reduces waterstop cross section more than 15 percent. 5) Bond failure at joint deeper than 1/16 inch or 15 percent of material thickness. 6) Misalignment of waterstop splice resulting in misalignment of waterstop in excess of 1/2 inch in 10 feet. 7) Visible porosity in the weld area, including pin holes. 8) Charred or burnt material. 9) Bubbles or inadequate bonding. 10) Visible signs of splice separation when cooled splice is bent by hand at a sharp angle.

3.2.4 Non-Metallic Hydrophilic Waterstop Installation

Miter cut ends to be joined with sharp knife or shears. Adhere the ends with cyanacrylate (super glue) adhesive. When joining hydrophilic type waterstop to PVC waterstop, the hydrophilic waterstop shall be positioned as shown on the drawings. Apply a liberal amount of a single component hydrophilic sealant to the junction to complete the transition.

3.2.5 Preformed Plastic Adhesive Installation

Install preformed plastic adhesive waterstops employing a prime, peel, place and pour procedure. Clean and dry joint surfaces before priming and just prior to placing the sealing strips. Splice the end of each strip to the next strip with a 1 inch overlap; press the overlap firmly to release trapped air. During damp or cold conditions, flash the joint surface with a safe, direct flame to warm and dry the surface adequately; dip the sealing strips in warm water to soften the material to achieve maximum bond to the concrete surface.

3.3 CONSTRUCTION JOINTS

Treat construction joints coinciding with expansion and contraction joints as expansion or contraction joints as applicable.

-- End of Section --

CONFORMED

SECTION TABLE OF CONTENTS

DIVISION 03 - CONCRETE

SECTION 03 20 00.00 10

CONCRETE REINFORCING

05/14

PART 1 GENERAL

1.1 REFERENCES
1.2 SUBMITTALS
1.3 QUALITY ASSURANCE
1.3.1 Welding Qualifications
1.3.2 Qualification of Steel Bar Butt-Splicers
1.3.3 Qualification of Butt-Splicing Procedure
1.4 DELIVERY, STORAGE, AND HANDLING

PART 2 PRODUCTS

2.1 DOWELS
2.2 FABRICATED BAR MATS
2.3 REINFORCING STEEL
2.3.1 Zinc-Coated (Galvanized) Bars
2.3.2 Epoxy-Coated Bars
2.3.3 Mechanical Butt-Splices
2.4 WELDED WIRE REINFORCING
2.5 WIRE TIES
2.6 SUPPORTS
2.7 SYNTHETIC FIBER REINFORCEMENT
2.8 TESTS, INSPECTIONS, AND VERIFICATIONS
2.8.1 Reinforcement Steel Tests
2.8.2 Non-Destructive Testing of Welds

PART 3 EXECUTION

3.1 REINFORCEMENT
3.1.1 Placement
3.1.2 Placing Tolerances
3.1.3 Splicing
3.1.3.1 Lap Splices
3.1.3.2 Butt-Splices
3.1.3.2.1 Welded Butt Splices
3.1.3.2.2 Mechanical Butt-Splices
3.2 WELDED-WIRE REINFORCEMENT PLACEMENT
3.3 DOWEL INSTALLATION
3.4 FIELD TESTS AND INSPECTIONS
3.4.1 Identification of Splices
3.4.2 Examining, Testing, and Correcting
3.4.2.1 Visual Examination
3.4.2.2 Tension Tests
3.4.2.3 Non-destructive Testing of Welded Splices
3.4.2.4 Correction of Deficiencies
3.4.2.5 Supplemental Examination

CONFORMED

-- End of Section Table of Contents --

CONFORMED

SECTION 03 20 00.00 10

CONCRETE REINFORCING
05/14

PART 1 GENERAL
1.1 REFERENCES

The publications listed below form a part of this specification to the extent referenced. The publications are referred to within the text by the basic designation only.

AMERICAN CONCRETE INSTITUTE INTERNATIONAL (ACI)

ACI 117	(2010; Errata 2011) Specifications for Tolerances for Concrete Construction and Materials and Commentary
ACI 318	(2014; Errata 1-2 2014; Errata 3 2015) Building Code Requirements for Structural Concrete and Commentary
ACI SP-66	(2004) ACI Detailing Manual

AMERICAN WELDING SOCIETY (AWS)

AWS D1.4/D1.4M	(2011) Structural Welding Code - Reinforcing Steel

ASTM INTERNATIONAL (ASTM)

ASTM A1064/A1064M	(2015) Standard Specification for Carbon-Steel Wire and Welded Wire Reinforcement, Plain and Deformed, for Concrete
ASTM A184/A184M	(2006; E2011) Standard Specification for Fabricated Deformed Steel Bar Mats for Concrete Reinforcement
ASTM A370	(2014) Standard Test Methods and Definitions for Mechanical Testing of Steel Products
ASTM A53/A53M	(2012) Standard Specification for Pipe, Steel, Black and Hot-Dipped, Zinc-Coated, Welded and Seamless
ASTM A615/A615M	(2015) Standard Specification for Deformed and Plain Carbon-Steel Bars for Concrete Reinforcement
ASTM A675/A675M	(2014) Standard Specification for Steel Bars, Carbon, Hot-Wrought, Special Quality, Mechanical Properties

CONFORMED

ASTM A706/A706M	(2014) Standard Specification for Low-Alloy Steel Deformed and Plain Bars for Concrete Reinforcement
ASTM A767/A767M	(2009) Standard Specification for Zinc-Coated (Galvanized) Steel Bars for Concrete Reinforcement
ASTM A884/A884M	(2014) Standard Specification for Epoxy-Coated Steel Wire and Welded Wire Reinforcement
ASTM A934/A934M	(2013) Standard Specification for Epoxy-Coated Prefabricated Steel Reinforcing Bars

CONCRETE REINFORCING STEEL INSTITUTE (CRSI)

CRSI 10MSP	(2009; 28th Ed) Manual of Standard Practice

1.2 SUBMITTALS

Government approval is required for submittals with a "G" designation; submittals not having a "G" designation are for information only. When used, a designation following the "G" designation identifies the office that will review the submittal for the Government. Submit the following in accordance with Section 01 33 00 SUBMITTAL PROCEDURES:

SD-01 Preconstruction Submittals

Butt-Splices; G

SD-02 Shop Drawings

Reinforcement; G

SD-03 Product Data

Mechanical Butt-Splices; G
Reinforcing Steel; G

SD-04 Samples

Epoxy-Coated Bars

SD-06 Test Reports

Tests, Inspections, and Verifications; G

SD-07 Certificates

Reinforcing Steel
Qualified Welders
Qualification of Steel Bar Butt-Splicers

CONFORMED

1.3 QUALITY ASSURANCE

1.3.1 Welding Qualifications

Welders are required to be qualified in accordance with AWS D1.4/D1.4M. Perform qualification test at the worksite and notify the Contracting Officer 24 hours prior to conducting tests. Special welding procedures and welders qualified by others may be accepted as permitted by AWS D1.4/D1.4M. Submit a list of qualified welders names.

1.3.2 Qualification of Steel Bar Butt-Splicers

Qualification of steel bar butt-splicers are required to be certified to have satisfactorily completed a course of instruction in the proposed method of butt-splicing or have satisfactorily performed such work within the preceding year. Submit certificates on the Qualifications of Steel Bar Butt-Splicers prior to commencing butt-splicing.

1.3.3 Qualification of Butt-Splicing Procedure

As a condition of approval of the butt-splicing procedure, make three test butt-splices of steel bars of each size to be spliced using the proposed butt-splicing method, in the presence of the Contracting Officer. Tension tested to destruction these test butt-splices and unspliced bars of the same size, with stress-strain curves plotted for each test. Test results must show that the butt-splices meet the specified strength and deformation requirements in order for the splicing procedure to be approved.

1.4 DELIVERY, STORAGE, AND HANDLING

Store reinforcement and accessories off the ground on platforms, skids, or other supports.

PART 2 PRODUCTS

2.1 DOWELS

Provide dowels conforming to ASTM A675/A675M. Steel pipe conforming to ASTM A53/A53M, Schedule 80, may be used as dowels provided the ends are closed with metal or plastic inserts or with mortar.

2.2 FABRICATED BAR MATS

Fabricated bar mats conforming to ASTM A184/A184M.

2.3 REINFORCING STEEL

Reinforcing steel of deformed bars conforming to ASTM A615/A615M or ASTM A706/A706M, grades and sizes as indicated. Cold drawn wire used for spiral reinforcement must conform to ASTM A1064/A1064M.

Submit certified copies of mill reports attesting that the reinforcing steel furnished contains no less than 25 percent recycled scrap steel and meets the requirements specified herein, prior to the installation of reinforcing steel.

2.3.1 Zinc-Coated (Galvanized) Bars

Zinc-coated (galvanized) bars complying with the requirements of

CONFORMED

ASTM A767/A767M, Class II coating, galvanized after fabrication.

2.3.2 Epoxy-Coated Bars

Epoxy-coated steel bars complying with the requirements of ASTM A934/A934M, including written certifications for coating material and coated bars, sample of coating material, and 1.5 pounds of patching material.

2.3.3 Mechanical Butt-Splices

Mechanical butt splices must be an approved exothermic, threaded coupling, swaged sleeve or other positive connecting type, and develop 125 percent of the specified minimum yield tensile strength of the spliced bars or of the smaller bar in transition splices. In addition to this strength requirement, the additional deformation of number 14 and smaller bars due to slippage or other movement within the splice sleeve cannot exceed (unit strain) (0.015 inches unit strain 0.0015 inches/inch) beyond the elongation of an unspliced bar based upon a 10 inch gage length spanning the extremities of the sleeve at a stress of 30,000 psi. The additional deformation of number 18 bars must not exceed (unit strain) 0.03 inches (unit strain 0.003 inches/inch) beyond the elongation of an unspliced bar based upon a 10 inch gage length spanning the extremities of the sleeve at a stress of 30,000 psi. Determine the amount of the additional deformation from the stress-strain curves of the unspliced and spliced bars tested as required in paragraph QUALIFICATION OF BUTT-SPLICING PROCEDURE for qualification of the butt-splicing procedure.

2.4 WELDED WIRE REINFORCING

Welded wire reinforcing conforming to ASTM A1064/A1064M. When directed by the Contracting Officer for special applications, use welded wire reinforcing conforming to ASTM A884/A884M. For wire with a specified yield strength (fy) exceeding 60,000 psi, fy must be the stress corresponding to a strain of 0.35 percent.

2.5 WIRE TIES

Use wire ties that are 16 gauge or heavier black annealed steel wire.

2.6 SUPPORTS

Design bar supports for formed surfaces in accordance with CRSI 10MSP and fabricate of steel or precast concrete blocks. Provide precast concrete blocks with wire ties and not less than 4 inches square when supporting reinforcement on ground. Precast concrete block must have compressive strength equal to that of the surrounding concrete. Coat steel supports for coated or galvanized bars with electrically compatible material for a distance of at least 2 inches beyond the point of contact with the bar. Where concrete formed surfaces will be exposed to weather or where surfaces are to be painted, use galvanized, plastic protected or stainless steel supports within 1/2 inch of concrete surface. Concrete supports used in concrete exposed to view must have the same color and texture as the finish surface. For slabs on grade and topping slabs on steel deck, supports use precast concrete blocks, plastic coated steel fabricated with bearing plates, or specifically designed wire-fabric supports fabricated of plastic.

Provide bar supports complying with the requirements of ACI SP-66. Provide plastic-coated wire, stainless steel or precast concrete supports for bars in concrete with formed surfaces exposed to view or to be painted. Use

CONFORMED

wedge-shaped precast concrete supports, not larger than 3-1/2 by 3-1/2 inches, of thickness equal to that indicated for concrete cover and with an embedded hooked tie-wire for anchorage. Bar supports used in precast concrete with formed surfaces exposed to view must be the same quality, texture and color as the finish surfaces.

2.7 SYNTHETIC FIBER REINFORCEMENT

Polypropylene synthetic fiber with a denier less than 100 and a nominal fiber length of 2 inches.

2.8 TESTS, INSPECTIONS, AND VERIFICATIONS

Perform material tests, specified and required by applicable standards, by an approved laboratory and certified to demonstrate that the materials are in conformance with the specifications. Perform and certify tests, inspections, and verifications and certify. Submit certified tests reports of reinforcement steel showing that the steel complies with the applicable specifications for each steel shipment and identified with specific lots prior to placement. Submit three copies of the heat analyses for each lot of steel furnished certifying that the steel conforms to the heat analyses.

2.8.1 Reinforcement Steel Tests

Perform mechanical testing of steel in accordance with ASTM A370 except as otherwise specified or required by the material specifications. Perform tension tests on full cross-section specimens using a gage length that spans the extremities of specimens with welds or sleeves included. From chemical analyses of steel heats report the percentages of carbon, phosphorous, manganese, sulphur and silicon present in the steel.

2.8.2 Non-Destructive Testing of Welds

Perform non-destructive testing of welds in accordance with AWS D1.4/D1.4M Section 7, except that radiographic testing is not permitted.

PART 3 EXECUTION

3.1 REINFORCEMENT

Fabricate and place reinforcement steel and accessories as specified, as indicated, and as shown on approved shop drawings. Fabrication and placement details of steel and accessories not specified or shown must be in accordance with ACI SP-66 and ACI 318. Cold bend reinforcement unless otherwise authorized. Bending may be accomplished in the field or at the mill. Mill bend zinc-coated and epoxy-coated bars prior to coating. Bend all steel cold unless authorized. Do not bend bars after embedment in concrete. Place safety caps on all exposed ends of vertical concrete reinforcement bars that pose a danger to life safety. Face wire tie ends away from the forms. Submit detail drawings showing reinforcing steel placement, schedules, sizes, grades, and splicing and bending details. Show support details including types, sizes and spacing.

3.1.1 Placement

Reinforcement must be free from loose rust and scale, dirt, oil, or other deleterious coating that could reduce bond with the concrete. Place reinforcement in accordance with ACI 318 at locations indicated plus or minus one bar diameter. Do not continue reinforcement through expansion

CONFORMED

joints and place as indicated through construction or contraction joints. Cover with concrete coverage as indicated or as required by ACI 318. If bars are moved more than one bar diameter to avoid interference with other reinforcement, conduits or embedded items, the resulting arrangement of bars, including additional bars required to meet structural requirements, requires approval before concrete is placed.

3.1.2 Placing Tolerances

Conform bar spacing and concrete cover to ACI 117.

3.1.3 Splicing

Conform splices of reinforcement to ACI 318 and make only as required or indicated. Bars may be spliced at alternate or additional locations at no additional cost to the Government subject to approval. Splicing must be by lapping or by mechanical or welded butt connection; except that lap splices must not be used for bars larger than No. 11 unless otherwise indicated.

3.1.3.1 Lap Splices

Place lapped bars in contact and securely tied or spaced transversely apart to permit the embedment of the entire surface of each bar in concrete. Do not space lapped bars farther apart than 1/5 the required length of lap or 6 inches.

3.1.3.2 Butt-Splices

Use butt-splices only for splicing size 14 and 18 bars and for splicing #11 bars to larger bars except where otherwise shown or authorized. Make butt-splices by a method which develops splices suitable for tension, compression and stress reversal applications. Butt-splices must develop 90 percent of the specified minimum ultimate tensile strength of the smallest bar of each splice. Clean bars of all oil, grease, dirt, rust, scale and other foreign substances and flame dry before splicing. Provide jigs and clamps or other devices to support, align and hold the longitudinal centerline of the bars to be butt-spliced in a straight line. Submit proposed procedure for butt-splicing steel bars prior to making the test butt-splices for qualification of the procedure. Include properties and analyses of steel bars and splicing materials in the submitted procedure. Report physical properties of splicing sleeves to include length, inside and outside diameters, and inside surface details.

3.1.3.2.1 Welded Butt Splices

Fabricate welded butt splices in accordance with AWS D1.4/D1.4M.

3.1.3.2.2 Mechanical Butt-Splices

Fabricate mechanical butt-splices in accordance with the mechanical splicing device manufacturer's recommendations. Bars to be spliced by a mechanical butt-splicing process may be sawed, sheared or flame cut provided the ends of sheared bars are reshaped after shearing and all slag is removed from the ends of flame cut bars by chipping and wire brushing prior to splicing. Clean surfaces to be enclosed within a splice sleeve or coupling by wire brushing or other approved method prior to splicing. Make splices using manufacturer's standard jigs, clamps, ignition devices and other required accessories. Longitudinally stagger tension splices of number 14 or smaller bar a minimum of 5 feet or as otherwise indicated so

CONFORMED

that no more than half of the bars are spliced at any one section. Longitudinally stagger tension splices of number 18 bars a minimum of 5 feet so that no more than 1/3 of the bars are spliced at any one section.

3.2 WELDED-WIRE REINFORCEMENT PLACEMENT

Place welded-wire reinforcement in slabs as indicated. Reinforcement placed in slabs on grade must be continuous between expansion, construction, and contraction joints. Reinforcement placement at joints must be as indicated.

May lap splices in such a way that the overlapped area equals the distance between the outermost crosswires plus 2 inches. Stagger laps to avoid continuous laps in either direction. Wire or clip together reinforcement at laps at intervals not to exceed 4 feet. Position reinforcement by the use of supports.

3.3 DOWEL INSTALLATION

Install dowels in slabs on grade at locations indicated and at right angles to joint being doweled. Accurately position and align dowels parallel to the finished concrete surface before concrete placement. Rigidly support dowels during concrete placement. Coat one end of dowels with a bond breaker.

3.4 FIELD TESTS AND INSPECTIONS

3.4.1 Identification of Splices

Establish and maintain an approved method of identification of all field butt-splices which will indicate the splicer and the number assigned each splice made by the splicer.

3.4.2 Examining, Testing, and Correcting

Perform the following during the butt-splicing operations as specified and as directed:

3.4.2.1 Visual Examination

Visually examine all welded splices as required by AWS D1.4/D1.4M. Respliced connections resulting from correction of visual defects may be examined by non-destructive testing at the option of the Contracting Officer as specified in paragraph SUPPLEMENTAL EXAMINATION. Visually examine exothermic mechanical butt-splices to determine if the filler metal is clearly visible at the tap holes and completely fills the sleeves at both ends except for spaces of not more than 3/8 inch occupied by packing.

3.4.2.2 Tension Tests

Perform tensions tests to 90 percent of the minimum specified ultimate tensile strength of the spliced bars or to destruction on one test specimen made in the field for every 25 splices made. Test specimens must be made by the splicers engaged in the work, using the approved splicing procedure and the same size bars placed in the same relative position, and under the same conditions as those in the groups represented by the specimens. Furnish stress-strain curves for each butt-splice tested.

CONFORMED

3.4.2.3 Non-destructive Testing of Welded Splices

Examine not less than one of each 25 welded splices selected at random by the Contracting Officer by non-destructive testing and evaluate for defects in accordance with AWS D1.4/D1.4M Section 7, except that radiographic testing is not permitted.

3.4.2.4 Correction of Deficiencies

Do not embed splice in concrete until satisfactory results of visual examination and the required tests or examinations have been obtained. Remove all splices having visible defects or represented by test specimens which do not satisfy the tests or examinations. If any of the tension test specimens fail to meet the strength requirements or deformation limitations cut out two production splices from the same lot represented by the test specimens which failed and tension test. If both of the retests pass the strength requirements and deformation limitations all of the splices in the lot will be accepted. If one or both of the retests fail to meet the strength requirements or deformation limitations all of the splices in the lot will be rejected. Cut off the bars of rejected splices outside the splice zone of weld metal, filler metal contact, coupling or sleeve. Finish the cut ends as specified, resplice and reinspect the joints.

3.4.2.5 Supplemental Examination

The Contracting Officer may require additional or supplemental non-destructive testing and/or tension test of any completed splice. For costs of such examinations and tests see paragraph UNIT PRICES.

-- End of Section --

CONFORMED

SECTION TABLE OF CONTENTS

DIVISION 03 - CONCRETE

SECTION 03 31 01.00 10

CAST-IN-PLACE STRUCTURAL CONCRETE FOR CIVIL WORKS

05/14

PART 1 GENERAL

1.1 REFERENCES
1.2 DESIGN REQUIREMENTS
1.2.1 Air Content
1.2.2 Slump
1.2.3 Concrete Strength
1.2.4 Maximum Water-Cementitious Material (W/C) Ratio
1.2.5 Construction Tolerances
1.2.5.1 Formed Concrete Surfaces
1.2.5.2 Tunnel Linings, Conduits, Filling & Emptying Culverts
1.2.5.3 Appearance
1.3 SUBMITTALS
1.4 QUALITY ASSURANCE
1.4.1 Cement and Pozzolan
1.4.1.1 Prequalified Cement Sources
1.4.1.2 Prequalified Pozzolan Sources
1.4.1.3 Nonprequalified Cement Sources
1.4.1.4 Nonprequalified Pozzolan Sources
1.4.2 Cementitious Materials, Admixtures, and Curing Compound
1.5 DELIVERY, STORAGE, AND HANDLING

PART 2 PRODUCTS

2.1 MATERIALS
2.1.1 Cementitious Materials
2.1.1.1 Portland Cement
2.1.1.2 High-Early-Strength Portland Cement
2.1.1.3 Fly Ash
2.1.1.4 Raw or Calcined Natural Pozzolan
2.1.1.5 Ultra Fine Fly Ash and Ultra Fine Pozzolan
2.1.1.6 Blended Hydraulic Cement
2.1.2 Aggregates
2.1.2.1 Unfavorable Properties
2.1.3 Chemical Admixtures
2.1.3.1 Air-Entraining Admixture
2.1.3.2 Accelerating Admixture
2.1.3.3 Water-Reducing or Retarding Admixture
2.1.3.3.1 Water-Reducing or Retarding Admixtures
2.1.3.3.2 High-Range Water Reducing Admixture
2.1.4 Water
2.1.5 Reinforcing Steel
2.1.6 Nonshrink Grout
2.1.7 Abrasive Aggregates

PART 3 EXECUTION

CONFORMED

3.1 PREPARATION FOR PLACING
3.1.1 Embedded Items
3.1.2 Concrete on Earth Foundations
3.1.3 Concrete on Rock Foundations
3.1.4 Construction Joint Treatment
3.1.4.1 Joint Preparation
3.1.4.2 Air-Water Cutting
3.1.4.3 High-Pressure Water Jet
3.1.4.4 Wet Sandblasting
3.1.4.5 Waste Disposal
3.2 CONVEYING AND PLACING CONCRETE
3.2.1 Cold-Weather Requirements
3.2.2 Hot-Weather Requirements
3.3 TESTS AND INSPECTIONS
3.3.1 General
3.3.2 Testing and Inspection Requirements
3.3.2.1 Concrete Mixture
3.3.2.1.1 Air Content Testing
3.3.2.1.2 Air Content Corrective Action
3.3.2.1.3 Slump Testing
3.3.2.1.4 Slump Corrective Action
3.3.2.1.5 Temperature
3.3.2.1.6 Compressive-Strength Specimens
3.3.2.2 Inspection Before Placing
3.3.2.3 Placing
3.3.2.3.1 Placing Inspection
3.3.2.3.2 Placing Corrective Action
3.3.2.4 Vibrators
3.3.2.4.1 Vibrator Testing and Use
3.3.2.4.2 Vibrator Corrective Action
3.3.3 Reports

-- End of Section Table of Contents --

CONFORMED

SECTION 03 31 01.00 10

CAST-IN-PLACE STRUCTURAL CONCRETE FOR CIVIL WORKS
05/14

PART 1 GENERAL

1.1 REFERENCES

The publications listed below form a part of this specification to the extent referenced. The publications are referred to within the text by the basic designation only.

AMERICAN CONCRETE INSTITUTE INTERNATIONAL (ACI)

ACI 117	(2010; Errata 2011) Specifications for Tolerances for Concrete Construction and Materials and Commentary
ACI 301	(2010; Errata 2015) Specifications for Structural Concrete
ACI 305R	(2010) Guide to Hot Weather Concreting
ACI 306R	(2010) Guide to Cold Weather Concreting
ACI SP-15	(2011) Field Reference Manual: Standard Specifications for Structural Concrete ACI 301-05 with Selected ACI References

ASTM INTERNATIONAL (ASTM)

ASTM A1064/A1064M	(2015) Standard Specification for Carbon-Steel Wire and Welded Wire Reinforcement, Plain and Deformed, for Concrete
ASTM A615/A615M	(2015) Standard Specification for Deformed and Plain Carbon-Steel Bars for Concrete Reinforcement
ASTM C1064/C1064M	(2011) Standard Test Method for Temperature of Freshly Mixed Hydraulic-Cement Concrete
ASTM C1077	(2015) Standard Practice for Laboratories Testing Concrete and Concrete Aggregates for Use in Construction and Criteria for Laboratory Evaluation
ASTM C1107/C1107M	(2014a) Standard Specification for Packaged Dry, Hydraulic-Cement Grout (Nonshrink)
ASTM C1157/C1157M	(2011) Standard Specification for Hydraulic Cement

CONFORMED

ASTM C143/C143M	(2012) Standard Test Method for Slump of Hydraulic-Cement Concrete
ASTM C150/C150M	(2012) Standard Specification for Portland Cement
ASTM C1602/C1602M	(2012) Standard Specification for Mixing Water Used in Production of Hydraulic Cement Concrete
ASTM C172/C172M	(2014a) Standard Practice for Sampling Freshly Mixed Concrete
ASTM C231/C231M	(2014) Standard Test Method for Air Content of Freshly Mixed Concrete by the Pressure Method
ASTM C260/C260M	(2010a) Standard Specification for Air-Entraining Admixtures for Concrete
ASTM C295/C295M	(2012) Petrographic Examination of Aggregates for Concrete
ASTM C31/C31M	(2012) Standard Practice for Making and Curing Concrete Test Specimens in the Field
ASTM C33/C33M	(2013) Standard Specification for Concrete Aggregates
ASTM C39/C39M	(2015a) Standard Test Method for Compressive Strength of Cylindrical Concrete Specimens
ASTM C494/C494M	(2013) Standard Specification for Chemical Admixtures for Concrete
ASTM C595/C595M	(2014) Standard Specification for Blended Hydraulic Cements
ASTM C618	(2012a) Standard Specification for Coal Fly Ash and Raw or Calcined Natural Pozzolan for Use in Concrete
ASTM C989/C989M	(2014) Standard Specification for Slag Cement for Use in Concrete and Mortars
ASTM D75/D75M	(2014) Standard Practice for Sampling Aggregates

CONCRETE REINFORCING STEEL INSTITUTE (CRSI)

CRSI 10MSP	(2009; 28th Ed) Manual of Standard Practice

U.S. ARMY CORPS OF ENGINEERS (USACE)

COE CRD-C 521	(1981) Standard Test Method for Frequency and Amplitude of Vibrators for Concrete

CONFORMED

COE CRD-C 94 (1995) Corps of Engineers Specification for Surface Retarders

1.2 DESIGN REQUIREMENTS

Design in accordance with ACI 301, Section 4. Submit concrete mix designs with the following properties.

1.2.1 Air Content

Air content between 4 and 7 percent as delivered to the forms and as determined by ASTM C231/C231M, except that when the nominal maximum-size coarse aggregate is 3/4 inch, between 4.5 and 7.5 percent.

1.2.2 Slump

The slump within the range of 1 to 4 inches as determined in accordance with ASTM C143/C143M. Where placement by pump is approved, the slump must not exceed 6 inches.

1.2.3 Concrete Strength

Provide specified compressive strength f'c as follows:

COMPRESSIVE STRENGTH (PSI)	STRUCTURE OR PORTION OF STRUCTURE
5,000 @ 28 days	--
4,000 @ 28 days	All
3,000 @ 28 days	--
2,500 @ 28 days	--

1.2.4 Maximum Water-Cementitious Material (W/C) Ratio

Maximum W/C allowed as follows:

WATER-CEMENT RATIO, BY MASS	STRUCTURE OR PORTION OF STRUCTURE
0.40	--
0.45	All
0.50	--
0.55	--
0.60	--

These W/C's may cause higher strengths than that required by paragraph CONCRETE STRENGTH.

1.2.5 Construction Tolerances

Except as specified otherwise, a plus tolerance increases and a minus

CONFORMED

tolerance decreases the dimension to which it applies. A tolerance without sign means plus or minus. Where only one sign is specified, there is no limit in the other direction. Tolerances are not cumulative. The most restrictive tolerance will control. Tolerances cannot extend the structure beyond legal boundaries.

a. Make level and grade tolerance measurements of slabs as soon as possible after finishing. When forms or shoring are used, make the measurements prior to removal.

b. Construction tolerances must meet the requirements of ACI 117 and any of the following requirements that are applicable.

1.2.5.1 Formed Concrete Surfaces

For High Velocity flow, Class A-HV-Abrupt variation, a positive offset between concrete surfaces is a raise of elevation in the direction of water flow and a negative offset is a drop of elevation in the direction of the water flow.

Direction of water flow	+ 0 inches
	- 1/8 inch
Perpendicular to the direction of water flow	1/8 inch

1.2.5.2 Tunnel Linings, Conduits, Filling & Emptying Culverts

Water Conveying:

Lateral alignment	
Centerline alignment	1/2 inch
Inside dimensions	0.005 times inside dimension
Level alignment	
Profile grade	1/2 inch
Cross-Sectional dimension	
Tunnel and culvert lining	- 0 inch

1.2.5.3 Appearance

Clean permanently exposed surfaces, if stained or otherwise discolored, by a method that does not harm the concrete and that is approved by the Contracting Officer.

1.3 SUBMITTALS

Government approval is required for submittals with a "G" designation; submittals not having a "G" designation are for information only. When used, a designation following the "G" designation identifies the office that will review the submittal for the Government. Submit the following in accordance with Section 01 33 00 SUBMITTAL PROCEDURES:

CONFORMED

SD-02 Shop Drawings

Reinforcing steel; G

SD-03 Product Data

Concrete Mix Designs; G
Construction Joint Treatment; G
Cold-Weather Requirements; G
Hot-Weather Requirements; G
Cementitious Materials, Admixtures, and Curing Compound; G
Nonshrink Grout
Mechanical Reinforcing Bar Connectors

SD-06 Test Reports

Aggregates; G
Mill Test Reports
Tests and Inspections
Water

SD-07 Certificates

Concrete Field Testing Technicians
Concrete Construction Inspector (CCI)
Cementitious Materials
Blended Hydraulic Cement

SD-08 Manufacturer's Instructions

Curing Compound

1.4 QUALITY ASSURANCE

The Government will sample and test aggregates and concrete to determine compliance with the specifications. Provide facilities and labor as may be necessary for procurement of representative test samples. Samples of aggregates will be obtained at the point of batching in accordance with ASTM D75/D75M. Concrete will be sampled in accordance with ASTM C172/C172M. Do not use a material until the Contracting Officer gives notice that test results are satisfactory. The individuals who sample and test concrete or the constituents of concrete as required in this specification must have demonstrated a knowledge and ability to perform the necessary test procedures equivalent to the ACI minimum guidelines for certification of Concrete Field Testing Technicians, Grade I. The individuals who perform the inspection of concrete construction must have demonstrated a knowledge and ability equivalent to the ACI minimum guidelines for certification of Concrete Construction Inspector (CCI). Submit statements that the concrete testing technicians and the concrete inspectors meet the specified requirements. Maintain a copy of ACI SP-15 and CRSI 10MSP at project site.

1.4.1 Cement and Pozzolan

If cement or pozzolan is to be obtained from more than one source, state the estimated amount to be obtained from each source and the proposed schedule of shipments in the initial notification.

CONFORMED

1.4.1.1 Prequalified Cement Sources

Deliver and use cement directly from a mill of a producer designated as a qualified source. Samples of cement for check testing will be taken at the project site or concrete-producing plant by a representative of the Contracting Officer for testing at the expense of the Government. A list of prequalified cement sources is available from Director, U.S. Army Corps of Engineers, Engineer Research and Development Center - Structures Laboratory, 3909 Halls Ferry Road, Vicksburg, MS 39180-6199, ATTN: CEERD-SC.

1.4.1.2 Prequalified Pozzolan Sources

Deliver and use pozzolan directly from a producer designated as a qualified source. Samples of pozzolan for check testing will be taken at the project site by a representative of the Contracting Officer for testing at the expense of the Government. A list of prequalified pozzolan sources is available from the Director, U.S. Army Corps of Engineers, Engineer Research and Development Center - Structures Laboratory, 3909 Halls Ferry Road, Vicksburg, MS 39180-6199, ATTN: CEERD-SC.

1.4.1.3 Nonprequalified Cement Sources

Cement, if not from a prequalified source, will be sampled at the source and stored in sealed bins pending completion of testing. Sampling, testing, and the shipping inspection from the point of sampling, when the point is other than at the site of the work, will be made by or under the supervision of the Government and at its expense. Do not use cement until the Contracting Officer gives that test results are satisfactory. In the event of failure, the cement may be resampled and tested at the request and expense of the Contractor. When the point of sampling is other than at the site of the work, the fill gates of the sampled bin and conveyances used in shipment will be sealed under Government supervision and kept sealed until shipment from the bin has been completed. If tested cement is rehandled at transfer points, the extra cost of inspection is at the Contractor's expense. The cost of testing cement excess to project requirements is also at the expense of the Contractor. The charges for testing cement at the expense of the Contractor will be deducted from the payments due the Contractor at a rate of $500 dollars per ton of cement represented by the tests.

1.4.1.4 Nonprequalified Pozzolan Sources

Pozzolan, if not from a prequalified source, will be sampled at the source and stored in sealed bins pending completion of certain tests. Pozzolan will also be sampled at the site when determined necessary. All sampling and testing will be by and at the expense of the Government. Release for shipment and approval for use will be based on compliance with 7-day lime-pozzolan strength requirements and other physical and chemical and uniformity requirements for which tests can be completed by the time the 7-day lime-pozzolan strength test is completed. Release for shipment and approval for use on the above basis will be contingent on continuing compliance with the other requirements of the specifications. If a bin fails, the contents may be resampled and tested at the Contractor's expense. In this event the pozzolan may be sampled as it is loaded into cars, trucks, or barges provided they are kept at the source until released for shipment. Unsealing and resealing of bins and sealing of shipping conveyances will be done by or under the supervision of the Government. Shipping conveyances will not be accepted at the site of the work unless

CONFORMED

received with all seals intact. If pozzolan is damaged in shipment, handling, or storage, promptly remove it from the site of the work. Retest pozzolan that has not been used within 6 months after testing when directed by the Contracting Officer and reject the pozzolan if the test results are not satisfactory. If tested pozzolan is rehandled at transfer points, the extra cost of inspection is at the Contractor's expense. The cost of testing excess pozzolan is at the Contractor's expense at a rate of 75 cents per ton (2000 lb). The amount will be deducted from payment to the Contractor.

1.4.2 Cementitious Materials, Admixtures, and Curing Compound

At least 60 days in advance of concrete placement, notify the Contracting Officer of the sources for cementitious materials, admixtures, and curing compound, along with sampling location, brand name, type, and quantity to be used in the manufacture and/or curing of the concrete. Cementitious Materials, including Cement and Pozzolan, will be accepted on the basis of the manufacturer's certification of compliance. Do not use cementitious materials until receiving Contracting Officer notice of acceptance. Cementitious materials will be subject to check testing from samples obtained at the source, at transfer points, or at the project site, as scheduled by the Contracting Officer, and such sampling will be by or under the supervision of the Government at its expense. Promptly remove material not meeting specifications from the site of work. Submit samples of materials for Government testing and approval. Submit manufacturer's instructions for placement of curing compound.

1.5 DELIVERY, STORAGE, AND HANDLING

Retest chemical admixtures that have been in storage at the project site for longer than 6 months or that have been subjected to freezing and reject if test results are not satisfactory. Chemical admixtures will be accepted based on compliance with the requirements of paragraph CHEMICAL ADMIXTURES.

PART 2 PRODUCTS

2.1 MATERIALS

Submit mill test reports attesting that materials meet the requirements of the specification under which they are furnished. Certification and mill test reports must be from samples taken from the particular lot furnished. Certify the following for compliance with all specification requirements: Impervious-Sheet Curing Materials, Air-Entraining Admixture, Other Chemical Admixtures, Membrane-Forming Curing Compound. Submit descriptive literature of the Nonshrink Grout proposed for use together with a certificate from the manufacturer stating that it is suitable for the application or exposure for which it is being considered.

2.1.1 Cementitious Materials

Cementitious materials are portland cement, portland-pozzolan cement, portland cement in combination with pozzolan conforming to appropriate specifications listed below. Restrict the use of cementitious materials in architectural concrete to one color, one source, and one type.

2.1.1.1 Portland Cement

ASTM C150/C150M, Type II, except that the maximum amount of C3A in Type I cement is 15 percent including the heat of hydration at 7 days.

CONFORMED

2.1.1.2 High-Early-Strength Portland Cement

ASTM C150/C150M, Type III, with C3A limited to 5 percent used only when specifically approved in writing.

2.1.1.3 Fly Ash

ASTM C618, Class F, except that the maximum allowable loss on ignition must not exceed 3 percent. Class F fly ash for use in mitigating Alkali-Silica Reactivity must have a Calcium Oxide (CaO) content of less than 8 percent and a total equivalent alkali content less than 1.5 percent. Add with cement.

2.1.1.4 Raw or Calcined Natural Pozzolan

Natural pozzolan must be raw or calcined and conform to ASTM C618, Class N, including the optional requirements for uniformity and effectiveness in controlling Alkali-Silica reaction and must have an ignition loss not exceeding 3 percent. Class N pozzolan for use in mitigating Alkali-Silica Reactivity must have a Calcium Oxide (CaO) content of less than 13 percent and total equivalent alkali content less than 3 percent.

2.1.1.5 Ultra Fine Fly Ash and Ultra Fine Pozzolan

Ultra Fine Fly Ash (UFFA) and Ultra Fine Pozzolan (UFP) must conform to ASTM C618, Class F or N, and the following additional requirements:

a. The strength activity index at 28 days of age is at least 95 percent of the control specimens.

b. The average particle size does not exceed 6 microns.

c. The sum of SiO_2 + Al_2O_3 + Fe_2O_3 is greater than 77 percent.

2.1.1.6 Blended Hydraulic Cement

Conform to ASTM C595/C595M and ASTM C1157/C1157M, Type IP or IS, including the optional requirement for mortar expansion and consist of a mixture of ASTM C150/C150M Type II cement and a complementary cementing material. Provide slag added to the Type IS blend conforming to ASTM C989/C989M ground granulated blast-furnace slag. Use pozzolan added to the Type IP blend conforming ASTM C618 Class F and interground with the cement clinker. Provide the manufacturer's written statement that the amount of pozzolan in the finished cement will not vary more than plus or minus 5 mass percent of the finished cement from lot-to-lot or within a lot. The percentage and type of mineral admixture used in the blend cannot change from that submitted for the aggregate evaluation and mixture proportioning.

2.1.2 Aggregates

ASTM C33/C33M, except as modified herein. Furnish aggregates for exposed concrete surfaces from one source. Provide aggregates that do not contain any substance which may be deleteriously reactive with the alkalies in the cement. Submit test report showing compliance with ASTM C33/C33M.

2.1.2.1 Unfavorable Properties

Do not provide aggregates possessing properties or constituents that are

CONFORMED

known to have specific unfavorable effects in concrete when tested in accordance with ASTM C295/C295M.

2.1.3 Chemical Admixtures

Provide chemical admixtures, when required or permitted, that conform to the appropriate specification listed.

2.1.3.1 Air-Entraining Admixture

Conform to ASTM C260/C260M and consistently cause the concrete to have an air content in the specified ranges under field conditions.

2.1.3.2 Accelerating Admixture

Meet the requirements of ASTM C494/C494M, Type C or E, except that calcium chloride or admixtures containing calcium chloride is not permitted.

2.1.3.3 Water-Reducing or Retarding Admixture

2.1.3.3.1 Water-Reducing or Retarding Admixtures

ASTM C494/C494M, Type A, B, or D, except that the 6-month and 1-year compressive strength tests are waived.

2.1.3.3.2 High-Range Water Reducing Admixture

ASTM C494/C494M, Type F or G except that the 6-month and 1-year strength requirements are waived. The admixture may be used only when approved by the Contracting Officer, such approval being contingent upon particular mixture control as described in the Contractor's Quality Control Plan.

2.1.4 Water

Provide water for mixing and curing compliance with the requirements of ASTM C1602/C1602M; potable, and free of injurious amounts of oil, acid, salt, or alkali. Submit test report showing water complies with ASTM C1602/C1602M.

2.1.5 Reinforcing Steel

Provide reinforcing bars conforming to the requirements of ASTM A615/A615M, Grade 60, deformed. Welded steel wire reinforcement must conform to the requirements of ASTM A1064/A1064M. Detail reinforcement not indicated in accordance with ACI 301. Provide mechanical reinforcing bar connectors in accordance with ACI 301 and with 125 percent minimum yield strength of the reinforcement bar.

2.1.6 Nonshrink Grout

Conform to ASTM C1107/C1107M and a commercial formulation suitable for the application proposed.

2.1.7 Abrasive Aggregates

Fifty-five percent, minimum, aluminum oxide or silicon-dioxide abrasive ceramically bonded together to form a homogeneous material sufficiently porous to provide a good bond with portland paste; or factory-graded emery aggregate consisting of not less than 45 percent aluminum oxide and 25

CONFORMED

percent ferric oxide. Provide well graded aggregate from particles retained on the 600-µm (No. 30) sieve to particles passing the 2.36-mm (No. 8) sieve.

PART 3 EXECUTION

3.1 PREPARATION FOR PLACING

3.1.1 Embedded Items

Before placement of concrete, take care to determine that all embedded items are firmly and securely fastened in place as indicated on the drawings, or required. Embedded items must be free of oil and other foreign matter such as loose coatings or rust, paint, and scale. The embedding of wood in concrete will be permitted only when specifically authorized or directed. Temporarily fill voids in sleeves, inserts, and anchor slots with readily removable materials to prevent the entry of concrete into voids. Welding, including tack welding, will not be permitted on embedded metals within 2 feet of the surface of the concrete.

3.1.2 Concrete on Earth Foundations

Earth surfaces upon which concrete is to be placed must be clean, damp, and free from debris, frost, ice, and standing or running water. Prior to placement of concrete, compact the earth foundation in accordance with Section 31 00 00 EARTHWORK.

3.1.3 Concrete on Rock Foundations

Rock surfaces upon which concrete is to be placed must be clean, free from oil, standing or running water, ice, mud, drummy rock, coating, debris, and loose, semidetached, or unsound fragments. Clean joints in rock to a satisfactory depth, as determined by the Contracting Officer, and to firm rock on the sides. Immediately before the concrete is placed, thoroughly clean all rock surfaces by the use of air-water jets or sandblasting as described in paragraph CONSTRUCTION JOINT TREATMENT. Keep all rock surfaces continuously wet for at least 24 hours immediately prior to placing concrete thereon. Cover all approximately horizontal surfaces immediately before the concrete is placed with a layer of mortar proportioned similar to that in the concrete mixture. Cover the mortar with concrete before the time of initial setting of the mortar.

3.1.4 Construction Joint Treatment

Submit the method and equipment proposed for joint cleanup and waste disposal, for review and approval. Conform construction joint treatment to the following requirements:

3.1.4.1 Joint Preparation

Prepare concrete surfaces to which additional concrete is to be bonded for receiving the next lift or adjacent concrete by cleaning with either air-water cutting, sandblasting, high-pressure water jet, or other approved method. Air-water cutting will not be permitted on formed surfaces or surfaces congested with reinforcing steel. Regardless of the method used, the resulting surfaces must be free from all laitance and inferior concrete so that clean, well bonded coarse aggregate is exposed uniformly throughout the lift surface. Do not undercut the edges of the coarse aggregate. Wash the surface again as the last operation prior to placing the next lift. No

CONFORMED

standing water is allowed on the surface upon which concrete is placed.

3.1.4.2 Air-Water Cutting

Perform air-water cutting of a construction joint at the proper time and only on horizontal construction joints. The air pressure used in the jet must be 90 to 110 psi, and the water pressure must be just sufficient to bring the water into effective influence of the air pressure. When approved by the Contracting Officer, a retarder complying with the requirements of COE CRD-C 94 may be applied to the surface of the lift to prolong the period of time during which air-water cutting is effective. Prior to receiving approval, furnish samples of the material to be used and demonstrate the method to be used in applications. After cutting, wash and rinse the surface long as there is any trace of cloudiness of the wash water. Where necessary to remove accumulated laitance, coatings, stains, debris, and other foreign material, high-pressure water jet or sandblasting will be required as the last operation before placing the next lift.

3.1.4.3 High-Pressure Water Jet

A stream of water under a pressure of not less than 3,000 psi may be used for cleaning. Delay its use until the concrete is sufficiently hard so that only the surface skin or mortar is removed and there is no undercutting of coarse-aggregate particles. If the water jet is incapable of a satisfactory cleaning, clean the surface by sandblasting.

3.1.4.4 Wet Sandblasting

This method may be used when the concrete has reached sufficient strength to prevent undercutting of the coarse aggregate particles. Then thoroughly wash the surface of the concrete to remove all loose materials.

3.1.4.5 Waste Disposal

Dispose of the waste water employed in cutting, washing, and rinsing of concrete surfaces such that the waste water does not stain, discolor, or affect exposed surfaces of the structures, or damage the environment of the project area. The method of disposal is subject to approval.

3.2 CONVEYING AND PLACING CONCRETE

Convey and place concrete in accordance with ACI 301, Section 5. Do not reconstitute concrete that has begun to solidify.

3.2.1 Cold-Weather Requirements

Place concrete in cold weather in accordance with ACI 306R.

3.2.2 Hot-Weather Requirements

Place concrete in hot weather in accordance with ACI 305R.

3.3 TESTS AND INSPECTIONS

Submit test results and inspection reports, daily and weekly. Tests and inspect in accordance the following:

CONFORMED

3.3.1 General

Perform the inspections and tests described below, and, based upon the results of these inspections and tests, take the action required and submit reports as required. When, in the opinion of the Contracting Officer, the concreting operation is out of control, cease concrete placement. Locate the laboratory performing the tests on site and conform with ASTM C1077. The Government will inspect the laboratory, equipment, and test procedures prior to start of concreting operations and at least once per year thereafter for conformance with ASTM C1077.

3.3.2 Testing and Inspection Requirements

3.3.2.1 Concrete Mixture

3.3.2.1.1 Air Content Testing

Conduct air content tests when test specimens are fabricated. In addition, make at least two tests for air content on randomly selected batches of each separate concrete mixture produced during each 8-hour period of concrete production. Make additional tests when excessive variation in workability is reported by the placing foreman or Government quality assurance representative. Conduct tests in accordance with ASTM C231/C231M. Plot test results on control charts which at all times are readily available to the Government.

3.3.2.1.2 Air Content Corrective Action

Whenever points on the control chart for percent air reach either warning limit, immediately adjust the amount of air-entraining admixture batched. As soon as is practical after each adjustment, conduct another test to verify the result of the adjustment. Whenever a point on the control chart range reaches the warning limit, recalibrate the admixture dispenser to ensure that it is operating accurately and with good reproducibility. Whenever a point on either control chart reaches an action limit line, the air content is considered out of control and immediately halt the concreting operation until the air content is under control. Make additional air content tests when concreting is restarted.

3.3.2.1.3 Slump Testing

In addition to slump tests made when test specimens are fabricated, make at least four slump tests on randomly selected batches in accordance with ASTM C143/C143M for each separate concrete mixture produced during each 8-hour or less period of concrete production each day. Also, make additional tests shall when excessive variation in workability is reported by the placing foreman or Government's quality assurance representative. Plot test results on control charts, which are readily available to the Government at all times. Keep copies of the current control charts in the field by the Contractor's quality control representatives and plot results as tests are made. When a single slump test reaches or goes beyond either the upper or lower action limit, immediately make a second test on the same batch of concrete. Average the results of the two tests and use this average as the slump of the batch to plot on both the control chart for percent air and the chart for range, and for determining the need for any remedial action. Set an upper warning limit at 1/2 inch below the maximum allowable slump on separate control charts for percent air used for each type of mixture as specified in paragraph SLUMP, and set an upper action limit line and lower action limit line at the maximum and minimum allowable

CONFORMED

slumps, respectively, as specified in the same paragraph. Plot the range between each consecutive slump test for each type of mixture on a single control chart for range on which an upper action limit is set at 2 inches. Take samples for slump at the mixer, however, the Contractor is responsible for delivering the concrete to the placement site at the stipulated slump. If the materials or transportation methods cause slump loss between mixer and the placement, take correlation samples at the placement site as required by the Contracting Officer and control the slump at the mixer as directed.

3.3.2.1.4 Slump Corrective Action

Whenever points on the control chart for slump reach the upper warning limit, immediately adjust the batch weights of water and fine aggregate. Make adjustments so that the total water content does not exceed that amount allowed by the maximum W/C specified, based upon aggregates which are in a saturated surface-dry condition. When a single slump reaches the upper or lower action limit, no further concrete may be delivered to the placing site until proper adjustments have been made. Immediately after each adjustment, make another test to verify the correctness of the adjustment. Whenever two consecutive slump tests, made during a period when there was no adjustment of batch weights, produce a point on the control chart for range at or above the upper action limit, immediately halt the concreting operation and take appropriate steps to bring the slump under control. Also, make additional slump tests as directed.

3.3.2.1.5 Temperature

Measure the temperature of the concrete when compressive strength specimens are fabricated. Measure in accordance with ASTM C1064/C1064M. Report the temperature along with the compressive strength data.

3.3.2.1.6 Compressive-Strength Specimens

Obtain samples and test concrete for quality control during placement. Sample fresh concrete for testing in accordance with ASTM C172/C172M. Make six test cylinders. Test concrete for compressive strength at 7 and 28 days for each design mix and for every 100 cubic yards of concrete. Test two cylinders at 7 days; two cylinders at 28 days; and hold two cylinders in reserve. Prepare concrete test specimens in accordance with ASTM C31/C31M. Perform compressive strength testing in accordance with ASTM C39/C39M.

3.3.2.2 Inspection Before Placing

Inspect foundation or construction joints, forms, and embedded items for quality in sufficient time prior to each concrete placement to certify to the Contracting Officer that they are ready to receive concrete. Report the results of each inspection in writing.

3.3.2.3 Placing

3.3.2.3.1 Placing Inspection

The placing foreman supervises all placing operations, determines that the correct quality of concrete or grout is placed in each location as directed and is for measuring and recording concrete temperatures and ambient temperature hourly during placing operations, weather conditions, time of placement, yardage placed, and method of placement.

CONFORMED

3.3.2.3.2 Placing Corrective Action

The placing foreman must not permit batching and placing to begin until he has verified that an adequate number of vibrators in working order and with competent operators are available. Discontinue placing if any pile of concrete is inadequately consolidated. If any batch of concrete fails to meet the temperature requirements, take immediate steps to improve temperature controls.

3.3.2.4 Vibrators

3.3.2.4.1 Vibrator Testing and Use

Determine the frequency and amplitude of each vibrator in accordance with COE CRD-C 521 prior to initial use and at least once a month when concrete is being placed. Make additional tests as directed when a vibrator does not appear to be adequately consolidating the concrete. Determine the frequency at the same time the vibrator is operating in concrete with the tachometer held against the upper end of the vibrator head while almost submerged and just before the vibrator is withdrawn from the concrete. Determine the amplitude with the head vibrating in air. Take two measurements, one near the tip and another near the upper end of the vibrator head and average these results. Report the make, model, type, and size of the vibrator and frequency and amplitude results in writing.

3.3.2.4.2 Vibrator Corrective Action

Immediately remove any vibrator not meeting the requirements of paragraph VIBRATORS from service and repair or replace.

3.3.3 Reports

Report all results of tests or inspections conducted informally as they are completed and in writing daily. Prepare a weekly report for the updating of control charts covering the entire period from the start of the construction season through the current week. During periods of cold-weather protection, make reports of pertinent temperatures daily. These requirements do not relieve the Contractor of the obligation to report certain failures immediately as required in preceding paragraphs. Confirm such reports of failures and the action taken in writing in the routine reports. The Contracting Officer has the right to examine all test and inspection records.

-- End of Section --

CONFORMED

SECTION TABLE OF CONTENTS

DIVISION 03 - CONCRETE

SECTION 03 35 00.00 10

CONCRETE FINISHING

05/14

PART 1 GENERAL

1.1 REFERENCES
1.2 SUBMITTALS

PART 2 PRODUCTS

2.1 GENERAL
2.2 Water Proofing Paint

PART 3 EXECUTION

3.1 Water Proofing Paint
3.2 FINISHING FORMED SURFACES
3.3 REPAIRS
3.4 FINISHING UNFORMED SURFACES
3.4.1 General
3.4.2 Rough Slab Finish
3.4.3 Float Finish
3.4.4 Trowel Finish
3.5 EXTERIOR SLAB AND RELATED ITEMS
3.5.1 Pavements
3.5.2 Sidewalks
3.5.3 Curbs and Gutters

-- End of Section Table of Contents --

CONFORMED

SECTION 03 35 00.00 10

CONCRETE FINISHING
05/14

PART 1 GENERAL

1.1 REFERENCES

The publications listed below form a part of this specification to the extent referenced. The publications are referred to within the text by the basic designation only.

AMERICAN CONCRETE INSTITUTE INTERNATIONAL (ACI)

ACI 301	(2010; Errata 2015) Specifications for Structural Concrete
ACI 305R	(2010) Guide to Hot Weather Concreting

ASTM INTERNATIONAL (ASTM)

ASTM D6904	(2013) Standard Practice for Resistance to Wind-Driven Rain for Exterior Coatings Applied on Masonry
ASTM D7088	(2008) Standard Practice for Resistance to Hydrostatic Pressure for Coatings Used in Below Grade Applications Applied on Masonry

1.2 SUBMITTALS

Government approval is required for submittals with a "G" designation; submittals not having a "G" designation are for information only. Submit the following in accordance with Section 01 33 00 SUBMITTAL PROCEDURES:

SD-03 Product Data

Recycled Content Products; (LEED)

Water Proofing Paint

PART 2 PRODUCTS

2.1 GENERAL

Submit documentation indicating: distance between manufacturing facility and the project site, distance of raw material origin from the project site, percentage of post-industrial and post-consumer recycled content per unit of product and relative dollar value of recycled content products to total dollar value of products included in project. Provide submittals as specified in the subject Section.

2.2 Water Proofing Paint

The existing concrete building wall surface between Sta. 171+90.47 to Sta.

CONFORMED

175+25.73 shall receive a water proofing paint application as shown on the plans and details. The Contractor shall submit manufacturer's product and application within 7 days before starting work. The waterproof paint must:

1. be ready mixed;

2. withstand 15 pounds of hydrostatic pressure;

3. the film must be breathable and not trap moisture against the existing wall;

4. must pass ASTM D7088, Resistance to Hydrostatic Pressure and ASTM D6904 Resistance to Wind Driven Rain.

PART 3 EXECUTION

3.1 Water Proofing Paint

A test surface for the water proofing paint must be applied and accepted prior to applying throughout the existing wall. The existing wall surface must be clean and dirt free prior to the paint application. If the existing wall has peeling paint, the Contractor is required to remove prior to paint application. Water proofing paint shall be applied under the manufacturer's instructions and recommendations. A minimum of two (2) coats must be applied on the existing wall and within the limits as shown on the plans.

3.2 FINISHING FORMED SURFACES

Forms, form materials, and form construction are specified in Section 03 11 13.00 10 STRUCTURAL CAST-IN-PLACE CONCRETE FORMING. Finish formed surfaces as specified herein. Unless another type of architectural or special finish is specified, leave surfaces with the texture imparted by the forms except that defective surfaces must be repaired.

Maintain uniform color of the concrete by use of only one mixture without changes in materials or proportions for any structure or portion of structure. The form panels used to produce the finish must be orderly in arrangement, with joints between panels planned in approved relation to openings, building corners, and other architectural features. Do not reuse forms if there is any evidence of surface wear or defects that would impair the quality of the surface.

3.3 REPAIRS

Repair in accordance with ACI 301, Section 5.

3.4 FINISHING UNFORMED SURFACES

The finish of all unformed surfaces must meet the requirements of paragraph CONSTRUCTION TOLERANCES in Section 03 31 01.00 10 STRUCTURAL CONCRETE FOR CIVIL WORKS, when tested as specified herein.

3.4.1 General

The ambient temperature of spaces adjacent to unformed surfaces being finished and of the base on which concrete will be placed must not be less than 40 degrees F. In hot weather meet all requirements of Section 03 31 01.00 10 CAST-IN-PLACE STRUCTURAL CONCRETE FOR CIVIL WORKS paragraphs HOT WEATHER REQUIREMENTS and PREVENTION OF PLASTIC SHRINKAGE CRACKING. In

CONFORMED

hot weather when the rate of evaporation of surface moisture, as determined by use of Figure 2.1.5 of ACI 305R, may reasonably be expected to exceed 0.2 pounds per square foot per hour. Make provisions for windbreaks, shading, fog spraying, or wet covering with a light-colored material in advance of placement, and take such protective measures as quickly as finishing operations will allow. Float finish unformed surfaces that are not to be covered by additional concrete or backfill, with additional finishing as specified below, and true to the elevation indicated. Bring surfaces to receive additional concrete or backfill to the elevation indicated, properly consolidate, and leave true and regular. Unless otherwise indicated, evenly slope exterior surfaces for drainage. Where drains are provided, evenly slope interior floors to the drains. Carefully make joints with a jointing or edging tool. Protect the finished surfaces from stains or abrasions. Grate tampers or "jitterbugs" cannot be used for any surfaces. The dusting of surfaces with dry cement or other materials or the addition of any water during finishing is not be permitted. If bleedwater is present prior to finishing, carefully drag off the excess water or remove by absorption with porous materials such as burlap. During finishing operations, take extreme care to prevent over finishing or working water into the surface; this can cause "crazing" (surface shrinkage cracks which appear after hardening) of the surface. Remove and replace any slabs with surfaces which exhibit significant crazing. During finishing operations, check surfaces with a 10 foot straightedge, applied in both directions at regular intervals while the concrete is still plastic, to detect high or low areas.

3.4.2 Rough Slab Finish

In accordance with ACI 301, Section 5.

3.4.3 Float Finish

In accordance with ACI 301, Section 5.

3.4.4 Trowel Finish

In accordance with ACI 301, Section 5.

3.5 EXTERIOR SLAB AND RELATED ITEMS

3.5.1 Pavements

Immediately following the final consolidation of the surface, float the pavement longitudinally from bridges resting on the side forms and spanning but not touching the concrete. If necessary, place and screed additional concrete, and operate the float until a satisfactory surface has been produced. Advance the floating operation not more than half the length of the float and then continued over the new and previously floated surfaces. After finishing is completed but while the concrete is still plastic, eliminate minor irregularities and score marks in the pavement surface by means of long-handled cutting straightedges. Use straightedges that are 12 feet in length and operated from the sides of the pavement and from bridges. Equip a straightedge operated from the side of the pavement with a handle 3 feet longer than one-half the width of the pavement. Test the surface for trueness with a 12 foot straightedge held in successive positions parallel and at right angles to the center line of the pavement, and the whole area covered as necessary to detect variations. Advance the straightedge along the pavement in successive stages of not more than one-half the length of the straightedge. Immediately fill depressions with

CONFORMED

freshly mixed concrete, strike off, consolidate, and refinish. Also strike and refinish projections above the required elevation. Continue the straightedge testing and finishing until the entire surface of the concrete is true. Before the surface sheen has disappeared and well before the concrete becomes nonplastic, give the surface of the pavement a nonslip sandy surface texture by use of a burlap drag. A strip of clean, wet burlap from 3 to 5 feet wide and 2 feet longer than the pavement width shall be carefully pulled across the surface. Round edges and joints with an edger having a radius of 1/8 inch.

3.5.2 Sidewalks

Apply a lightly broomed finish.

3.5.3 Curbs and Gutters

Finish exposed surfaces using a stiff bristled brush.

-- End of Section --

CONFORMED

SECTION TABLE OF CONTENTS

DIVISION 03 - CONCRETE

SECTION 03 39 00.00 10

CONCRETE CURING

05/14

PART 1 GENERAL

1.1 REFERENCES
1.2 SUBMITTALS
1.3 DELIVERY, STORAGE, AND HANDLING

PART 2 PRODUCTS

2.1 CURING MATERIALS
2.2 WATER

PART 3 EXECUTION

3.1 CURING AND PROTECTION
3.2 TESTING AND INSPECTION FOR CQC
3.2.1 Moist Curing Inspections
3.2.2 Moist Curing Corrective Actions
3.2.3 Membrane Curing Inspection
3.2.4 Membrane Curing Corrective Action
3.2.5 Sheet Curing Inspection
3.2.6 Sheet Curing Corrective Action

-- End of Section Table of Contents --

CONFORMED

SECTION 03 39 00.00 10

CONCRETE CURING
05/14

PART 1 GENERAL

1.1 REFERENCES

The publications listed below form a part of this specification to the extent referenced. The publications are referred to within the text by the basic designation only.

AMERICAN CONCRETE INSTITUTE INTERNATIONAL (ACI)

ACI 301	(2010; Errata 2015) Specifications for Structural Concrete
ACI 308.1	(2011) Specification for Curing Concrete

ASTM INTERNATIONAL (ASTM)

ASTM C1602/C1602M	(2012) Standard Specification for Mixing Water Used in Production of Hydraulic Cement Concrete

1.2 SUBMITTALS

Government approval is required for submittals with a "G" designation; submittals not having a "G" designation are for information only. Submit the following in accordance with Section 01 33 00 SUBMITTAL PROCEDURES:

SD-03 Product Data

Curing Materials

SD-06 Test Reports

Testing and Inspection for CQC

SD-08 Manufacturer's Instructions

Curing Compound

1.3 DELIVERY, STORAGE, AND HANDLING

Store materials in such a manner as to avoid contamination and deterioration. Materials must be capable of being accurately identified after bundles or containers are opened.

PART 2 PRODUCTS

2.1 CURING MATERIALS

Provide curing materials in accordance with ACI 301 Sections 5 and ACI 308.1 Section 2. Submit product data and manufacturer's instructions for

CONFORMED

concrete curing compound.

2.2 WATER

Provide water for curing that is fresh, clean, potable, and free of injurious amounts of oil, acid, salt, or alkali, except that non-potable water may be used if it meets the requirements of ASTM C1602/C1602M.

PART 3 EXECUTION

3.1 CURING AND PROTECTION

Cure and protect concrete in accordance with ACI 301 Section 5.

3.2 TESTING AND INSPECTION FOR CQC

Perform the inspection and tests described below and, based upon the results of these inspections and tests, take the action required. Submit certified copies of laboratory test reports, including curing compound proposed for use on this project.

3.2.1 Moist Curing Inspections

At least once each shift, and not less than twice per day on both work and non-work days, inspect all areas subject to moist curing. Note and record the surface moisture condition.

3.2.2 Moist Curing Corrective Actions

When a daily inspection report lists an area of inadequate curing, take immediate corrective action, and extend the required curing period for those areas by 1 day.

3.2.3 Membrane Curing Inspection

Apply no curing compound until the Contractor has verified that the compound is properly mixed and ready for spraying. At the end of each operation, estimate the quantity of compound used by measurement of the container and the area of concrete surface covered, compute the rate of coverage in square feet/gallon, and note whether or not coverage is uniform.

3.2.4 Membrane Curing Corrective Action

When the coverage rate of the curing compound is less than that specified or when the coverage is not uniform, spray the entire surface again.

3.2.5 Sheet Curing Inspection

At least once each shift and once per day on non-work days, inspection all areas being cured using impervious sheets. Note and record the condition of the covering and the tightness of the laps and tapes.

3.2.6 Sheet Curing Corrective Action

When a daily inspection report lists any tears, holes, or laps or joints that are not completely closed, promptly repair the tears and holes or replace the sheets, close the joints, and extend the required curing period for those areas by 1 day.

CONFORMED

-- End of Section --

CONFORMED

SECTION TABLE OF CONTENTS

DIVISION 03 - CONCRETE

SECTION 03 40 00.00 10

PLANT-PRECAST CONCRETE PRODUCTS FOR BELOW GRADE CONSTRUCTION

08/06

PART 1 GENERAL

1.1 REFERENCES
1.2 SUBMITTALS
1.3 QUALITY ASSURANCE
1.3.1 NPCA and ACPA Plant Certification
1.3.2 Qualifications, Quality Control and Inspection
1.3.2.1 Qualifications
1.3.2.2 Quality Control Procedures
1.3.2.3 Inspection
1.3.2.4 Test Reports
1.3.2.4.1 Material Certifications and/or Laboratory Test Reports
1.3.2.4.2 Mix Test
1.3.2.4.3 Self-Consolidating Concrete
1.3.2.4.4 In-Plant QA/QC Inspection Reports
1.4 DELIVERY, STORAGE, AND HANDLING
1.4.1 Delivery
1.4.2 Storage
1.4.3 Handling

PART 2 PRODUCTS

2.1 SYSTEM DESCRIPTION
2.1.1 Standard Precast Units
2.1.2 Custom-Made Precast Units
2.1.3 Proprietary Precast Units
2.1.4 Joints and Sealants
2.1.5 Concrete Mix Design
2.1.5.1 Concrete Mix Proportions
2.1.5.2 Concrete Strength
2.1.5.3 Water-to-Cement Ratio
2.1.5.4 Air Content
2.1.5.5 Corrosion Control for Sanitary Sewer Systems
2.2 MATERIALS
2.2.1 Cement
2.2.2 Silica Fume
2.2.3 Fly Ash and Pozzolans
2.2.4 Ground Granulated Blast-Furnace Slag
2.2.5 Water
2.2.6 Aggregates
2.2.6.1 Selection
2.2.6.2 Aggregates for Lightweight Concrete
2.2.7 Admixtures
2.2.7.1 Air-Entraining
2.2.7.2 Accelerating, Retarding, Water Reducing
2.2.7.3 Pigments

CONFORMED

2.2.8 Reinforcement
2.2.8.1 Reinforcing Bars
2.2.8.2 Reinforcing Wire
2.2.8.3 Welded Wire Fabric
2.2.8.4 Epoxy Coated Reinforcement
2.2.8.5 Galvanized Reinforcement
2.2.9 Synthetic Fiber Reinforcement
2.2.10 Inserts and Embedded Metal
2.2.11 Accessories
2.2.12 Pipe Entry Connectors
2.2.13 Grout
2.2.14 Epoxy Mortar

PART 3 EXECUTION

3.1 FABRICATION AND PLACEMENT
3.1.1 Forms
3.1.2 Reinforcement
3.1.3 Embedded Items
3.2 CONCRETE
3.2.1 Concrete Mixing
3.2.2 Concrete Placing
3.2.2.1 Cold Weather Concreting
3.2.2.2 Hot Weather Concreting
3.2.3 Concrete Curing
3.2.3.1 Curing by Moisture Retention
3.2.3.2 Curing with Heat and Moisture
3.2.4 Surface Finish
3.2.4.1 Formed Non-Architectural Surfaces
3.2.4.2 Unformed Surfaces
3.2.4.3 Special Finishes
3.2.5 Stripping Products from Forms
3.2.6 Patching and Repair
3.2.6.1 Repairing Minor Defects
3.2.6.2 Repairing Honeycombed Areas
3.2.6.3 Repairing Major Defects
3.2.7 Shipping Products
3.3 INSTALLATION
3.3.1 Site Access
3.3.2 General Requirements
3.3.3 Water Tightness
3.4 FIELD QUALITY CONTROL
3.4.1 Site Tests
3.4.2 Vacuum Testing
3.4.3 Water Testing

-- End of Section Table of Contents --

CONFORMED

SECTION 03 40 00.00 10

PLANT-PRECAST CONCRETE PRODUCTS FOR BELOW GRADE CONSTRUCTION
08/06

PART 1 GENERAL

1.1 REFERENCES

The publications listed below form a part of this specification to the extent referenced. The publications are referred to within the text by the basic designation only.

AMERICAN CONCRETE INSTITUTE INTERNATIONAL (ACI)

ACI 211.1	(1991; R 2009) Standard Practice for Selecting Proportions for Normal, Heavyweight and Mass Concrete
ACI 211.2	(1998; R 2004) Standard Practice for Selecting Proportions for Structural Lightweight Concrete
ACI 305R	(2010) Guide to Hot Weather Concreting
ACI 306.1	(1990; R 2002) Standard Specification for Cold Weather Concreting
ACI 318	(2014; Errata 1-2 2014; Errata 3 2015) Building Code Requirements for Structural Concrete and Commentary

AMERICAN CONCRETE PIPE ASSOCIATION (ACPA)

ACPA 01-102	(2000) Concrete Pipe Handbook
ACPA 01-110	(1984) Design Manual for Sulfide and Corrosion Prediction and Control
ACPA QPC	(2005; Ver 3.0) QCast Plant Certification Manual

AMERICAN RAILWAY ENGINEERING AND MAINTENANCE-OF-WAY ASSOCIATION (AREMA)

AREMA Eng Man	(2015) Manual for Railway Engineering

AMERICAN WELDING SOCIETY (AWS)

AWS D1.1/D1.1M	(2010; Errata 2011) Structural Welding Code - Steel
AWS D1.4/D1.4M	(2011) Structural Welding Code - Reinforcing Steel

CONFORMED

ASTM INTERNATIONAL (ASTM)

ASTM A1064/A1064M	(2015) Standard Specification for Carbon-Steel Wire and Welded Wire Reinforcement, Plain and Deformed, for Concrete
ASTM A153/A153M	(2009) Standard Specification for Zinc Coating (Hot-Dip) on Iron and Steel Hardware
ASTM A36/A36M	(2014) Standard Specification for Carbon Structural Steel
ASTM A563	(2007a; R2014) Standard Specification for Carbon and Alloy Steel Nuts
ASTM A572/A572M	(2015) Standard Specification for High-Strength Low-Alloy Columbium-Vanadium Structural Steel
ASTM A615/A615M	(2015) Standard Specification for Deformed and Plain Carbon-Steel Bars for Concrete Reinforcement
ASTM A706/A706M	(2014) Standard Specification for Low-Alloy Steel Deformed and Plain Bars for Concrete Reinforcement
ASTM A767/A767M	(2009) Standard Specification for Zinc-Coated (Galvanized) Steel Bars for Concrete Reinforcement
ASTM A775/A775M	(2007b; R2014) Standard Specification for Epoxy-Coated Steel Reinforcing Bars
ASTM A884/A884M	(2014) Standard Specification for Epoxy-Coated Steel Wire and Welded Wire Reinforcement
ASTM C1064/C1064M	(2011) Standard Test Method for Temperature of Freshly Mixed Hydraulic-Cement Concrete
ASTM C1107/C1107M	(2014a) Standard Specification for Packaged Dry, Hydraulic-Cement Grout (Nonshrink)
ASTM C1240	(2014) Standard Specification for Silica Fume Used in Cementitious Mixtures
ASTM C1244	(2011) Standard Test Method for Concrete Sewer Manholes by the Negative Air Pressure (Vacuum) Test Prior to Backfill
ASTM C138/C138M	(2014) Standard Test Method for Density ("Unit Weight"), Yield, and Air Content (Gravimetric) of Concrete

CONFORMED

ASTM C143/C143M	(2012) Standard Test Method for Slump of Hydraulic-Cement Concrete
ASTM C1478	(2008; R 2013) Standard Specification for Storm Drain Resilient Connectors Between Reinforced Concrete Storm Sewer Structures, Pipes and Laterals
ASTM C150/C150M	(2012) Standard Specification for Portland Cement
ASTM C171	(2007) Standard Specification for Sheet Materials for Curing Concrete
ASTM C173/C173M	(2014) Standard Test Method for Air Content of Freshly Mixed Concrete by the Volumetric Method
ASTM C192/C192M	(2014) Standard Practice for Making and Curing Concrete Test Specimens in the Laboratory
ASTM C231/C231M	(2014) Standard Test Method for Air Content of Freshly Mixed Concrete by the Pressure Method
ASTM C260/C260M	(2010a) Standard Specification for Air-Entraining Admixtures for Concrete
ASTM C309	(2011) Standard Specification for Liquid Membrane-Forming Compounds for Curing Concrete
ASTM C31/C31M	(2012) Standard Practice for Making and Curing Concrete Test Specimens in the Field
ASTM C33/C33M	(2013) Standard Specification for Concrete Aggregates
ASTM C330/C330M	(2014) Standard Specification for Lightweight Aggregates for Structural Concrete
ASTM C39/C39M	(2015a) Standard Test Method for Compressive Strength of Cylindrical Concrete Specimens
ASTM C443	(2011) Standard Specification for Joints for Concrete Pipe and Manholes, Using Rubber Gaskets
ASTM C494/C494M	(2013) Standard Specification for Chemical Admixtures for Concrete
ASTM C595/C595M	(2014) Standard Specification for Blended Hydraulic Cements
ASTM C618	(2012a) Standard Specification for Coal Fly Ash and Raw or Calcined Natural

CONFORMED

	Pozzolan for Use in Concrete
ASTM C877	(2008) External Sealing Bands for Concrete Pipe, Manholes, and Precast Box Sections
ASTM C881/C881M	(2014) Standard Specification for Epoxy-Resin-Base Bonding Systems for Concrete
ASTM C891	(2011) Installation of Underground Precast Concrete Utility Structures
ASTM C920	(2014a) Standard Specification for Elastomeric Joint Sealants
ASTM C923	(2008; R 2013) Standard Specification for Resilient Connectors Between Reinforced Concrete Manhole Structures, Pipes and Laterals
ASTM C989/C989M	(2014) Standard Specification for Slag Cement for Use in Concrete and Mortars
ASTM C990	(2009; R 2014) Standard Specification for Joints for Concrete Pipe, Manholes and Precast Box Sections Using Preformed Flexible Joint Sealants
CSA GROUP (CSA)	
CSA A23.4	(2009; R 2014) Precast Concrete - Materials and Construction
NATIONAL PRECAST CONCRETE ASSOCIATION (NPCA)	
NPCA QC Manual	(2012) Quality Control Manual for Precast and Prestressed Concrete Plants

1.2 SUBMITTALS

All submittals are the responsibility of the precast concrete producer. Government approval is required for submittals with a "G" designation; submittals not having a "G" designation are for information only. When used, a designation following the "G" designation identifies the office that will review the submittal for the Government. Submit the following in accordance with Section 01 33 00 SUBMITTAL PROCEDURES:

SD-01 Preconstruction Submittals

Quality Control Procedures

SD-02 Shop Drawings

Standard Precast Units; G
Custom-Made Precast Units; G

SD-03 Product Data

Standard Precast Units

CONFORMED

Proprietary Precast Units
Embedded Items
Accessories

SD-05 Design Data

Design Calculations
Concrete Mix Proportions

SD-06 Test Reports

Test Reports

SD-07 Certificates

Quality Control Procedures

1.3 QUALITY ASSURANCE

Demonstrate adherence to the standards set forth in NPCA QC Manual and/or ACPA QPC. Meet requirements written in the subparagraphs below.

1.3.1 NPCA and ACPA Plant Certification

The precast concrete producer shall be certified by the National Precast Concrete Association's and/or the American Concrete Pipe Association's Plant Certification Program prior to and during production of the products for this project.

1.3.2 Qualifications, Quality Control and Inspection

1.3.2.1 Qualifications

Select a precast concrete producer that has been in the business of producing precast concrete units similar to those specified for a minimum of 3 years. The precast concrete producer shall maintain a permanent quality control department or retain an independent testing agency on a continuing basis.

1.3.2.2 Quality Control Procedures

Submit quality control procedures established by the precast manufacturer in accordance with NPCA QC Manual and/or ACPA QPC. Show that the following QC tests are performed as required and in accordance with the ASTM standards indicated.

a. Slump: Perform a slump test for each 150 cu yd of concrete produced, or once a day, whichever comes first. Perform slump tests in accordance with ASTM C143/C143M.

b. Temperature: Measure the temperature of fresh concrete when slump or air content tests are made and when compressive test specimens are made in accordance with ASTM C1064/C1064M.

c. Compressive Strength: Make at least four compressive strength specimens for each 150 cubic yards of concrete of each mix in accordance with the following Standards: ASTM C31/C31M, ASTM C192/C192M, ASTM C39/C39M.

d. Air Content: Perform tests for air content on air-entrained, wet-cast

CONFORMED

concrete for each 150 cu yd of concrete, but not less often than once each day when air-entrained concrete is used. Determine the air content in accordance with either ASTM C231/C231M or ASTM C173/C173M for normal weight aggregates and ASTM C173/C173M for lightweight aggregates.

e. Unit Weight: Perform tests for unit weight a minimum of once per week to verify the yield of batch mixes. Perform unit weight tests for each 100 cu yd of lightweight concrete in accordance with ASTM C138/C138M.

1.3.2.3 Inspection

The Contracting Officer may place an inspector in the plant when the units covered by this specification are being manufactured. The burden of payment for plant inspection will be clearly detailed in the specification. The precast concrete producer shall give notice 14 days prior to the time the units will be available for plant inspection. Neither the exercise nor waiver of inspection at the plant will affect the Government's right to enforce contractual provisions after units are transported or erected.

1.3.2.4 Test Reports

Submit the following as specified in paragraph SUBMITTALS:

1.3.2.4.1 Material Certifications and/or Laboratory Test Reports

Include mill tests and all other test data, for portland cement, blended cement, pozzolans, ground granulated blast furnace slag, silica fume, aggregate, admixtures, and curing compound proposed for use on this project.

1.3.2.4.2 Mix Test

Test reports showing that the mix has been successfully tested to produce concrete with the properties specified and will be suitable for the job conditions. Such tests may include compressive strength, flexural strength, plastic or hardened air content, freeze thaw durability, abrasion and absorption. Clearly detail in the specifications special tests for precast concrete or cast-in items.

1.3.2.4.3 Self-Consolidating Concrete

Documentation, when the use of self-consolidating concrete (SCC) is proposed, showing a minimum of 30-days production track records demonstrating that SCC is appropriate for casting of the product.

1.3.2.4.4 In-Plant QA/QC Inspection Reports

Upon the request of the Contracting Officer.

1.4 DELIVERY, STORAGE, AND HANDLING

1.4.1 Delivery

Deliver precast units to the site in accordance with the delivery schedule to avoid excessive build-up of units in storage at the site. Upon delivery to the jobsite, all precast concrete units will be inspected by the Contracting Officer for quality and final acceptance.

CONFORMED

1.4.2 Storage

Store units off the ground or in a manner that will minimize potential damage.

1.4.3 Handling

Handle, transport, and store products in a manner to minimize damage. Lifting devices or holes shall be consistent with industry standards. Perform lifting with methods or devices intended for this purpose as indicated on shop drawings.

PART 2 PRODUCTS

2.1 SYSTEM DESCRIPTION

Furnish precast concrete units designed and fabricated by an experienced and acceptable precast concrete manufacturer who has been, for at least 3 years, regularly and continuously engaged in the manufacture of precast concrete work similar to that indicated on the drawings. Coordinate precast work with the work of other trades.

2.1.1 Standard Precast Units

Design standard precast concrete units to withstand indicated design load conditions in accordance with applicable industry design standards ACI 318, ASTM, ACPA 01-102, Chapter 7-Design for Sulfide Control. Design shall also consider stresses induced during handling, shipping and installation as to avoid product cracking or other handling damage. Indicate design loads for precast concrete units on the shop drawings. Submit drawings for standard precast concrete units furnished by the precast concrete producer for approval by the Contracting Officer. These drawings shall demonstrate that the applicable industry design standards have been met. Include installation and construction information on shop drawings. Include details of steel reinforcement size and placement as well as supporting design calculations, if appropriate. Produce precast concrete units in accordance with the approved drawings. Submit cut sheets, for standard precast concrete units, showing conformance to project drawings and requirements, and to applicable industry design standards listed in this specification.

2.1.2 Custom-Made Precast Units

Submit design calculations for custom-made precast units, prepared and sealed by a registered professional engineer, for approval prior to fabrication. Include in the calculations the analysis of units for lifting stresses and the sizing of lifting devices. Submit drawings furnished by the precast concrete producer for approval by the Contracting Officer. Show on these drawings complete design, installation, and construction information in such detail as to enable the Contracting Officer to determine the adequacy of the proposed units for the intended purpose. Include details of steel reinforcement size and placement as well as supporting design calculations, if appropriate. Produce precast concrete units in accordance with the approved drawings.

2.1.3 Proprietary Precast Units

Products manufactured under franchise arrangements shall conform to all the requirements specified by the franchiser. Items not included in the

CONFORMED

franchise specification, but included in this specification, shall conform to the requirements in this specification. Submit standard plans or informative literature, for proprietary precast concrete units. Make available supporting calculations and design details upon request. Provide sufficient information as to demonstrate that such products will perform the intended task.

2.1.4 Joints and Sealants

Provide joints and sealants between adjacent units of the type and configuration indicated on shop drawings meeting specified design and performance requirements.

2.1.5 Concrete Mix Design

2.1.5.1 Concrete Mix Proportions

Base selection of proportions for concrete on the methodology presented in ACI 211.1 for normal weight concrete and ACI 211.2 for lightweight concrete. Develop the concrete proportions using the same type and brand of cement, the same type and brand of pozzolan, the same type and gradation of aggregates, and the same type and brand of admixture that will be used in the manufacture of precast concrete units for the project. Do not use calcium chloride in precast concrete containing reinforcing steel or other embedded metal items. At a minimum of thirty days prior to precast concrete unit manufacturing, the precast concrete producer will submit a mix design and proportions for each strength and type of concrete that will be used. Furnish a complete list of materials, including quantity, type, brand and applicable data sheets for all mix design constituents as well as applicable reference specifications. The use of self-consolidating concrete is permitted, provided that mix design proportions and constituents meet the requirements of this specification.

2.1.5.2 Concrete Strength

Provide precast concrete units with a 28-day compressive strength (f'c) of 4,000 psi.

2.1.5.3 Water-to-Cement Ratio

Furnish concrete, that will be exposed to freezing and thawing, containing entrained air and with water-cement ratios of 0.45 or less. Furnish concrete which will not be exposed to freezing, but which is required to be watertight, with a water-cement ratio of 0.48 or less if the concrete is exposed to fresh water, or 0.45 or less if exposed to brackish water or sea water. Furnish reinforced concrete exposed to deicer salts, brackish water or seawater with a water-cement ratio of 0.40 or less for corrosion protection.

2.1.5.4 Air Content

The air content of concrete that will be exposed to freezing conditions shall be within the limits given below.

CONFORMED

	AIR CONTENT PERCENT	
NOMINAL MAXIMUM AGGREGATE SIZE	SEVERE EXPOSURE	MODERATE EXPOSURE
3/8 inch	6.0 to 9.0	4.5 to 7.5
1/2 inch	5.5 to 8.5	4.0 to 7.0
3/4 inch	4.5 to 7.5	3.5 to 6.5
1.0 inch	4.5 to 7.5	3.0 to 6.0
1.5 inch	4.5 to 7.0	3.0 to 6.0
Note: For specified compressive strengths greater than 5000 psi, air content may be reduced 1 percent		

2.1.5.5 Corrosion Control for Sanitary Sewer Systems

Follow design recommendations outlined in Chapter 7 of ACPA 01-102 or the ACPA 01-110 when hydrogen sulfide is indicated as a potential problem.

2.2 MATERIALS

Except as otherwise specified in the following paragraphs, conform material to Section 03 31 01.00 10 CAST-IN-PLACE STRUCTURAL CONCRETE FOR CIVIL WORKS and Section 03 20 00.00 10 CONCRETE REINFORCING.

2.2.1 Cement

Furnish cement conforming to ASTM C150/C150M, Type II. Furnish blended cements that conform to ASTM C595/C595M.

2.2.2 Silica Fume

Provide silica fume conforming to ASTM C1240. Provide available alkalies conforming to the optimal limit given in Table 2 of ASTM C1240. Silica fume may be furnished as a dry, densified material or as a slurry. When necessary, coordinate the services of a technical representative experienced in mixing, proportioning, placement procedures, and curing of concrete containing silica fume.

2.2.3 Fly Ash and Pozzolans

Fly ash is used as a supplementary cementitious material (SCM) conforming to ASTM C618, Class F with 4 percent maximum loss on ignition and 25 percent maximum cement replacement by weight.

2.2.4 Ground Granulated Blast-Furnace Slag

Ground granulated blast furnace slag is used as a supplementary cementitious material conforming to ASTM C989/C989M, Grade 120 with between 25 to 50 percent maximum cement replacement by weight.

2.2.5 Water

Furnish water potable or free of deleterious substances in amounts harmful to concrete or embedded metals.

CONFORMED

2.2.6 Aggregates

2.2.6.1 Selection

Furnish aggregates conforming to ASTM C33/C33M. Provide aggregates not containing any substance, which may be deleteriously reactive with the alkalies in the cement.

2.2.6.2 Aggregates for Lightweight Concrete

ASTM C330/C330M

2.2.7 Admixtures

2.2.7.1 Air-Entraining

ASTM C260/C260M

2.2.7.2 Accelerating, Retarding, Water Reducing

ASTM C494/C494M

2.2.7.3 Pigments

Non-fading and lime-resistant

2.2.8 Reinforcement

2.2.8.1 Reinforcing Bars

a. Deformed Billet-steel: ASTM A615/A615M
b. Deformed Low-alloy steel: ASTM A706/A706M

2.2.8.2 Reinforcing Wire

a. Plain Wire: ASTM A1064/A1064M
b. Deformed Wire: ASTM A1064/A1064M

2.2.8.3 Welded Wire Fabric

a. Plain Wire: ASTM A1064/A1064M
b. Deformed Wire: ASTM A1064/A1064M

2.2.8.4 Epoxy Coated Reinforcement

a. Reinforcing Bars: ASTM A775/A775M
b. Wires and Fabric: ASTM A884/A884M

2.2.8.5 Galvanized Reinforcement

Provide galvanized reinforcement conforming to ASTM A767/A767M.

2.2.9 Synthetic Fiber Reinforcement

Synthetic fiber shall be polypropylene with a denier less than 100 and a nominal fiber length of 2 inch.

CONFORMED

2.2.10 Inserts and Embedded Metal

All items embedded in concrete shall be of the type required for the intended task, and meet the following standards.

a. Structural Steel Plates, Angles, etc.: ASTM A36/A36M
b. Tie-rod: ASTM A572/A572M
c. Nuts: ASTM A563
d. Hot-dipped Galvanized: ASTM A153/A153M
e. Proprietary Items: In accordance with manufacturers published literature

2.2.11 Accessories

Submit proper installation instructions and relevant product data for items including, but not limited to, sealants, gaskets, connectors, steps, cable racks and other items installed before or after delivery.

a. Rubber Gaskets for Circular Concrete Sewer Pipe and Culvert Pipe: ASTM C443.

b. External Sealing Bands for Noncircular Sewer, Storm Drain and Culvert Pipe: ASTM C877.

c. Preformed Flexible Joint Sealants for Concrete Pipe, Manholes, and Manufactured Box Sections: ASTM C990.

d. Elastomeric Joint Sealants: ASTM C920

2.2.12 Pipe Entry Connectors

Pipe entry connectors shall conform to ASTM C923 or ASTM C1478.

2.2.13 Grout

Nonshrink Grout shall conform to ASTM C1107/C1107M. Cementitious grout shall be a mixture of portland cement, sand, and water. Proportion one part cement to approximately 2.5 parts sand, with the amount of water based on placement method. Provide air entrainment for grout exposed to the weather.

2.2.14 Epoxy Mortar

Epoxy mortar shall consist of equal parts by volume of gel type epoxy and dry silica sand, mixed in accordance with the manufacturer's directions. The liquid and gel type epoxy shall be a two component, epoxy-resin bonding system conforming to the requirements of ASTM C881/C881M, Type IV, Grade 2, Class B or C. The class supplied shall be governed by the range of temperatures for which the materials are to be used.

PART 3 EXECUTION

3.1 FABRICATION AND PLACEMENT

Perform fabrication in accordance with NPCA QC Manual, ACPA QPC, and AREMA Eng Man Chapter 8, Section 16.6 unless specified otherwise.

3.1.1 Forms

Use forms, for manufacturing precast concrete products, of the type and

CONFORMED

design consistent with industry standards and practices. They should be capable of consistently providing uniform products and dimensions. Construct forms so that the forces and vibrations to which the forms will be subjected can cause no product damage. Clean forms of concrete build-up after each use. Apply form release agents according to the manufacturers recommendations and do not allow to build up on the form casting surfaces.

3.1.2 Reinforcement

Follow applicable ASTM Standard or ACI 318 for placement and splicing. Fabricate cages of reinforcement either by tying the bars, wires or welded wire fabric into rigid assemblies or by welding, where permissible, in accordance with AWS D1.4/D1.4M. Position reinforcing as specified by the design and so that the concrete cover conforms to requirements. The tolerance on concrete cover shall be one-third of that specified but not more than 1/2 inch. Provide concrete cover not less than 1/2 inch. Take positive means to assure that the reinforcement does not move significantly during the casting operations.

3.1.3 Embedded Items

Position embedded items at locations specified in the design documents. Perform welding in accordance with AWS D1.1/D1.1M when necessary. Hold rigidly in place inserts, plates, weldments, lifting devices and other items to be imbedded in precast concrete products so that they do not move significantly during casting operations. Submit product data sheets and proper installation instruction for anchors, lifting inserts and other devices. Clearly indicate the products dimensions and safe working load.

3.2 CONCRETE

3.2.1 Concrete Mixing

Mixing operations shall produce batch-to-batch uniformity of strength, consistency, and appearance.

3.2.2 Concrete Placing

Deposit concrete into forms as near to its final location as practical. Keep the free fall of the concrete to a minimum. Consolidate concrete in such a manner that segregation of the concrete is minimized and honeycombed areas are kept to a minimum. Use vibrators to consolidate concrete with frequencies and amplitudes sufficient to produce well consolidated concrete.

3.2.2.1 Cold Weather Concreting

Perform cold weather concreting in accordance with ACI 306.1.

a. Provide adequate equipment for heating concrete materials and protecting concrete during freezing or near-freezing weather.

b. Free from frost all concrete materials and all reinforcement, forms, fillers, and ground with which concrete is to come in contact.

c. Do not use frozen materials or materials containing ice.

d. In cold weather the temperature of concrete at the time of placing shall not be below 45 degrees F. Discard concrete that freezes before its compressive strength reaches 500 psi.

CONFORMED

3.2.2.2 Hot Weather Concreting

Recommendations for hot weather concreting are given in detail in ACI 305R. During hot weather, give proper attention to constituents, production methods, handling, placing, protection, and curing to prevent excessive concrete temperatures or water evaporation that could impair required strength or serviceability of the member or structure. The temperature of concrete at the time of placing shall not exceed 90 degrees F.

3.2.3 Concrete Curing

Commence curing immediately following the initial set and completion of surface finishing.

3.2.3.1 Curing by Moisture Retention

Prevent moisture evaporation from exposed surfaces until adequate strength for stripping is reached by one of the following methods:

a. Cover with polyethylene sheets a minimum of 6 mils thick in accordance with ASTM C171.

b. Cover with burlap or other absorptive material and keep continually moist.

c. Use of a membrane-curing compound applied at a rate not to exceed 200 square ft/gallon, or in accordance with manufacturers' recommendations according to ASTM C309.

3.2.3.2 Curing with Heat and Moisture

Do not subject concrete to steam or hot air until after the concrete has attained its initial set. Apply steam, if used, within a suitable enclosure, which permits free circulation of the steam in accordance with CSA A23.4. If hot air is used for curing, take precautions to prevent moisture loss from the concrete. The temperature of the concrete shall not be permitted to exceed 150 degrees F. These requirements do not apply to products cured with steam under pressure in an autoclave.

3.2.4 Surface Finish

Finish unformed surfaces of wet-cast precast concrete products as specified. If no finishing procedure is specified, finish such surfaces using a strike-off to level the concrete with the top of the form.

3.2.4.1 Formed Non-Architectural Surfaces

Cast surfaces against approved forms following industry practices in cleaning forms, designing concrete mixes, placing and curing concrete. Normal color variations, form joint marks, small surface holes caused by air bubbles, and minor chips and spalls will be accepted but no major imperfections, honeycombs or other major defects will be permitted.

3.2.4.2 Unformed Surfaces

Finish unformed surfaces with a vibrating screed, or by hand with a float. Normal color variations, minor indentations, minor chips and spalls will be accepted but no major imperfections, honeycombs, or other major defects

CONFORMED

shall be permitted.

3.2.4.3 Special Finishes

Troweled, broom or other finishes shall be according to the requirements of project documents and performed in accordance with industry standards or supplier specifications. Submit finishes for approval when required by the project documents. The sample finishes shall be approved prior to the start of production.

3.2.5 Stripping Products from Forms

Do not remove products from the forms until the concrete reaches the compressive strength for stripping required by the design. If no such requirement exists, products may be removed from the forms after the final set of concrete provided that stripping damage is minimal.

3.2.6 Patching and Repair

No repair is required to formed surfaces that are relatively free of air voids and honeycombed areas, unless the surfaces are required by the design to be finished.

3.2.6.1 Repairing Minor Defects

Defects that will not impair the functional use or expected life of a precast concrete product may be repaired by any method that does not impair the product.

3.2.6.2 Repairing Honeycombed Areas

When honeycombed areas are to be repaired, remove all loose material and cut back the areas into essentially horizontal or vertical planes to a depth at which coarse aggregate particles break under chipping rather than being dislodged. Use proprietary repair materials in accordance with the manufacturer's instructions. If a proprietary repair material is not used, saturate the area with water. Immediately prior to repair, the area should be damp, but free of excess water. Apply a cement-sand grout or an approved bonding agent to the chipped surfaces, followed immediately by consolidating an appropriate repair material into the cavity.

3.2.6.3 Repairing Major Defects

Evaluate, by qualified personnel, defects in precast concrete products which impair the functional use or the expected life of products to determine if repairs are feasible and, if so, to establish the repair procedure.

3.2.7 Shipping Products

Do not ship products until they are at least 5 days old, unless it can be shown that the concrete strength has reached at least 75 percent of the specified 28-day strength, or that damage will not result, impairing the performance of the product.

CONFORMED

3.3 INSTALLATION

3.3.1 Site Access

It is the Contractor's responsibility to provide adequate access to the site to facilitate hauling, storage and proper handling of the precast concrete products.

3.3.2 General Requirements

a. Install precast concrete products to the lines and grades shown in the contract documents or otherwise specified.

b. Lift products by suitable lifting devices at points provided by the precast concrete producer.

c. Install products in accordance with the precast concrete producer's instructions. In the absence of such instructions, install underground utility structures in accordance with ASTM C891. Install pipe and manhole sections in accordance with the procedures outlined by the American Concrete Pipe Association.

d. Field modifications to the product will relieve the precast producer of liability even if such modifications result in the failure of the product.

3.3.3 Water Tightness

Where water tightness is a necessary performance characteristic of the precast concrete product's end use, watertight joints, connectors and inserts should be used to ensure the integrity of the entire system.

3.4 FIELD QUALITY CONTROL

3.4.1 Site Tests

When water tightness testing is required for an underground product, use one of the following methods:

3.4.2 Vacuum Testing

Prior to backfill vacuum test system according to ASTM C1244.

3.4.3 Water Testing

Perform water testing according to the contract documents and precast concrete producer's recommendations.

-- End of Section --

CONFORMED

SECTION TABLE OF CONTENTS

DIVISION 31 - EARTHWORK

SECTION 31 00 00

EARTHWORK

08/08

PART 1 GENERAL

1.1 REFERENCES
1.2 Phasing Plan
1.3 Wildlife Protection
1.4 DEFINITIONS
1.4.1 Satisfactory Materials - Embankment
1.4.2 Unsatisfactory Materials
1.4.3 Unsuitable Materials
1.4.4 Choke
1.4.5 Degree of Compaction
1.4.6 Select Granular Material
1.4.6.1 General Requirements
1.5 SYSTEM DESCRIPTION
1.5.1 Classification of Excavation
1.5.1.1 Common Excavation
1.5.1.2 Channel Bed and Bank Excavation
1.5.2 Dewatering Plan
1.5.3 Groundwater Management Plan
1.6 Geotechnical Engineer
1.7 SUBMITTALS

PART 2 PRODUCTS

2.1 REQUIREMENTS FOR ONSITE AND OFFSITE SOILS

PART 3 EXECUTION

3.1 Existing Channel Flow
3.2 COMMON EXCAVATION
3.2.1 Drainage
3.2.2 Dewatering
3.2.3 Underground Utilities
3.2.4 Structural Excavation
3.2.5 Overexcavation
3.3 SHORING
3.3.1 General Requirements
3.4 BORROW MATERIAL
3.5 SOIL STOCKPILES
3.6 FINAL GRADE OF SURFACES TO SUPPORT CONCRETE
3.7 GROUND SURFACE PREPARATION
3.7.1 General Requirements
3.7.2 Muddy or Frozen Material
3.8 UTILIZATION OF EXCAVATED MATERIALS
3.9 BACKFILLING AND COMPACTION
3.10 SPECIAL REQUIREMENTS

CONFORMED

3.10.1 Utility Pipe Bedding And Trench Backfill
3.11 SUBGRADE PREPARATION
3.12 COMPACTION
3.13 FINISHING
3.14 TESTING
3.14.1 Moisture Contents
3.14.2 Optimum Moisture and Laboratory Maximum Density
3.14.3 Tolerance Tests for Subgrades
3.15 DISPOSITION OF SURPLUS MATERIAL

-- End of Section Table of Contents --

CONFORMED

SECTION 31 00 00

EARTHWORK
08/08

PART 1 GENERAL

1.1 REFERENCES

The publications listed below form a part of this specification to the extent referenced. The publications are referred to within the text by the basic designation only.

ASTM INTERNATIONAL (ASTM)

ASTM D1140	(2000; R 2006) Amount of Material in Soils Finer than the No. 200 (75-micrometer) Sieve
ASTM D1556	(2007) Density and Unit Weight of Soil in Place by the Sand-Cone Method
ASTM D1557	(2012) Standard Test Methods for Laboratory Compaction Characteristics of Soil Using Modified Effort (56,000 ft-lbf/ft3) (2700 kN-m/m3)
ASTM D2216	(2010) Laboratory Determination of Water (Moisture) Content of Soil and Rock by Mass
ASTM D2419	(2014) Sand Equivalent Value of Soils and Fine Aggregate
ASTM D2487	(2011) Soils for Engineering Purposes (Unified Soil Classification System)
ASTM D4318	(2010; E 2014) Liquid Limit, Plastic Limit, and Plasticity Index of Soils
ASTM D6938	(2010) Standard Test Method for In-Place Density and Water Content of Soil and Soil-Aggregate by Nuclear Methods (Shallow Depth)

U.S. ENVIRONMENTAL PROTECTION AGENCY (EPA)

EPA 600/4-79/020	(1983) Methods for Chemical Analysis of Water and Wastes
EPA SW-846.3-3	(1999, Third Edition, Update III-A) Test Methods for Evaluating Solid Waste: Physical/Chemical Methods

1.2 Phasing Plan

The Contractor shall prepare and submit for approval a phasing plan prior

CONFORMED

to the start of construction.

1.3 Wildlife Protection

As described in Section 01 57 20.00 10 ENVIRONMENTAL PROTECTION, nesting bird surveys will be required prior to site disturbance such as earthwork.

1.4 DEFINITIONS

1.4.1 Satisfactory Materials - Embankment

Satisfactory materials for use in the construction of embankments shall comprise materials classified by ASTM D2487 as CL with a liquid limit of 40 or less and plasticity index of 10 to 20. Satisfactory materials for embankments shall have no stones greater than 3 inches in any dimension.

1.4.2 Unsatisfactory Materials

Unsatisfactory materials include man-made fills; trash; refuse; backfills from previous construction; and material classified as satisfactory which contains root and other organic matter or frozen material. Notify the Contracting Officer when encountering any contaminated materials.

1.4.3 Unsuitable Materials

Unsuitable materials shall be satisfactory materials that do not meet moisture content or compaction requirements.

1.4.4 Choke

The word "Choke" in this project means backfill with topsoil material or creek bed material.

1.4.5 Degree of Compaction

Degree of compaction required is expressed as a percentage of the maximum density obtained by the test procedure presented in ASTM D1557 abbreviated as a percent of laboratory maximum density.

1.4.6 Select Granular Material

1.4.6.1 General Requirements

Select granular material shall consist of materials classified as GW, GP, SW, SP, GW-GM, GP-GM, SW-SM or SP-SM by ASTM D2487. The liquid limit of such material must not exceed 30 percent when tested in accordance with ASTM D4318. The sand equivalent shall be less than 30 in accordance with ASTM D2419. The plasticity index must not be greater than 4 percent when tested in accordance with ASTM D4318, and not more than 12 percent by weight may be finer than No. 200 sieve when tested in accordance with ASTM D1140.

1.5 SYSTEM DESCRIPTION

Subsurface soil boring logs are included in the construction plans. A geologic profile is included in the Geotechnical Report. These data represent the best subsurface information available; however, variations may exist in the subsurface between boring locations.

CONFORMED

1.5.1 Classification of Excavation

Finish the specified excavation on a classified basis, in accordance with the following designations and classifications.

1.5.1.1 Common Excavation

Include common excavation with the satisfactory removal and disposal of all materials.

1.5.1.2 Channel Bed and Bank Excavation

The channel bed material having sand, gravel and cobble shall be excavated and stockpiled at designated areas and placed back at channel bed as the 4" choke with native creek bed soil material. The native channel bank soil material shall be excavated and stockpiled at designated areas and placed back at channel bank as the 4" choke with native material.

No excavated material shall be wasted without the approval of the Engineer. Wasted material shall be disposed of by the contractor in a manner approved by the Engineer.

Surplus material shall not be removed from the job site until the earthwork specified in the documents has been completed or when approved by the Engineer. Any surplus material removed prior to the completion of the specified work, which must subsequently be replaced, shall be replaced at no additional cost to the USACE.

1.5.2 Dewatering Plan

The Contractor shall submit a detailed dewatering plan prepared and sealed by a California registered professional engineer detailing equipment and procedures for accomplishing dewatering work a minimum of 15 days prior to starting work. The groundwater level shall be maintained at least two feet below the bottom of any excavation at all times. The dewatering plan shall include, but not be limited to, the following:

1. The proposed locations of well points, sumps, collection systems, and discharge locations.

2. Proposed dewatering equipment and materials to include pumps, collection systems, and pipes.

3. A dewatering sequence and schedule.

4. The locations of any instrumentation or monitoring equipment required to demonstrate conformance to the required groundwater levels beneath the excavations.

The dewatering shall be accomplished well in advance of excavation such that excavated and subgrade soils have adequate time to dry out and reach optimal moisture content.

1.5.3 Groundwater Management Plan

A Groundwater Management Plan was prepared to handle the potential groundwater contamination with VOCs attributed to the 1982 chlorinated solvent spill at the Jones Chemical site. The groundwater contamination is from Sta. 156+00 to Sta. 165+00, approximately. The contractor shall

CONFORMED

follow the recommendations in this plan and make any adjustment, if necessary. The Groundwater Management Plan is included as the Appendix E for reference. The Contractor shall submit a revised Groundwater Management Plan for approval a minimum of 15 days prior to installation.

1.6 Geotechnical Engineer

Hire a California registered Professional Geotechnical Engineer to provide inspection of excavations and soil/groundwater conditions throughout construction. The Geotechnical Engineer is responsible for performing pre-construction and periodic site visits throughout construction to assess site conditions. The Geotechnical Engineer is responsible for updating the excavation, sheeting and dewatering plans as construction progresses to reflect changing conditions and submit an updated plan if necessary. The Geotechnical Engineer shall provide a daily log of observations for each site visit and shall submit a weekly written report, informing the Contractor and Contracting Officer of the status of the plan and an accounting of the Contractor's adherence to the plan addressing any present or potential problems. The Contracting Officer is responsible for arranging meetings with the Geotechnical Engineer at any time throughout the contract duration.

1.7 SUBMITTALS

Government approval is required for submittals with a "G" designation; submittals not having a "G" designation are for information only. When used, a designation following the "G" designation identifies the office that will review the submittal for the Government. Submit the following in accordance with Section 01 33 00 SUBMITTAL PROCEDURES:

SD-01 Preconstruction Submittals

Phasing Plan; G

Shoring; G

The Contractor shall submit a shoring plan prepared and sealed by a registered professional engineer. The shoring plan will include lateral earth pressure calculations and diagrams with detailing equipment and procedures for accomplishing required shoring to prevent damages to the adjacent buildings and structures 15 days prior to starting work.

Dewatering Plan; G

The Contractor shall submit a dewatering plan prepared and sealed by a registered professional engineer detailing equipment and procedures for accomplishing dewatering work 15 days prior to starting work.

Groundwater Management Plan; G

The Contractor shall submit a detailed groundwater management plan prepared and sealed by a registered professional engineer. The plan shall show the equipment and procedures for accomplishing handling of contaminated groundwater, treatment, hauling and disposal, all in accordance with the applicable governing regulations, code, and laws.

CONFORMED

SD-03 Product Data

Utilization of Excavated Materials; G

The Contractor shall submit physical test results on excavated materials classified as undocumented fill prior to utilizing as engineered fill. The physical tests will be performed on material that appears to be satisfactory based on classification by the visual manual procedure after screening.

SD-06 Test Reports

Soil Testing Logs; G

The Contractor CQC shall submit a weekly log of all tests completed.

Borrow Site Testing; G

The Contractor shall submit analytical laboratory test results of potential borrow source materials as specified. The potential Borrow Site Testing will also include physical classification test results confirming that the material is satisfactory. Material will not be brought onsite until approved by the Contracting Officer.

Select Granular Material; G

The Contractor shall submit gradation curves and Caterer limits tests on sources of Select Granular Fill. Material will not be used as Select Granular Fill until approved by the Contracting Officer.

SD-07 Certificates

Testing Laboratory; G

The contractor shall submit the qualifications of their proposed testing laboratory for approval by the Contracting Officer. The testing laboratory shall be a Corps validated commercial testing laboratory or the Contractor's validated testing facilities.

PART 2 PRODUCTS

2.1 REQUIREMENTS FOR ONSITE AND OFFSITE SOILS

Test onsite and offsite soils for use as backfill for Total Petroleum Hydrocarbons (TPH), Benzene, Toluene, Ethyl Benzene, and Xylene (BTEX) and full Toxicity Characteristic Leaching Procedure (TCLP) including ignitability, corrosivity and reactivity. Soils acceptable for use as Backfill shall not contain any detectable concentrations of total petroleum hydrocarbons (TPH) or Benzene, Toluene, Ethyl Benzene, and Xylene (BTEX) and shall pass the TCPL test. Determine TPH concentrations by using EPA 600/4-79/020 Method 418.1. Determine BTEX concentrations by using EPA SW-846.3-3 Method 5030/8020. Perform TCLP in accordance with EPA SW-846.3-3 Method 1311. Provide Borrow Site Testing for TPH, BTEX and TCLP from a composite sample of material, with at least one test from each excavation or borrow site. Do not use material until tests have been approved by the Contracting Officer.

CONFORMED

PART 3 EXECUTION

3.1 Existing Channel Flow

The Contractor shall provide for diversion of channel flows. The channel flows will include water originating upstream of the work, water from side drains and channels adjacent to the work site and will be in addition to any and all groundwater originating within the work.

Precipitation data are available at San Jose Gage Station (NOAA Gage 7821) from 1961 to 1990. The monthly average precipitation ranged from high of 2.78 inches in January to 0.05 inches in June. The yearly average precipitation is 14.4 inches. The stream gauging data is available from the Santa Clara Valley Water District on Berryessa Creek at Calaveras Boulevard from 1968 through 1983 and 2006 through 2008. The annual peak discharges from this gauging station varied from 94 cfs (1972) to 2,820 cfs (1970).

The channel shall be unobstructed per the requirements of Rain Event Action Plan for flood flows from 1 November to 30 March.

3.2 COMMON EXCAVATION

Perform excavation of every type of material encountered within the limits of the project to the lines, grades, and elevations indicated and as specified. No excavation or subgrade preparation shall occur outside existing right-of-way limits. Perform the grading in accordance with the typical sections shown and the tolerances specified in paragraph FINISHING. Transport satisfactory excavated materials and place in fill within the limits of the work. Excavate unsatisfactory materials encountered within the limits of the work below grade and replace with satisfactory materials. Include such excavated material and the satisfactory material ordered as replacement in excavation. Dispose surplus satisfactory excavated material not required for fill in areas approved for surplus material storage or designated waste areas. Dispose unsatisfactory excavated material in designated waste or spoil areas. During construction, perform excavation and fill in a manner and sequence that will provide proper drainage at all times. The Contractor shall provide and maintain a stable working surface or subgrade throughout construction.

3.2.1 Drainage

The dewatering system shall be installed well in advance of the excavation to dry any soils as much as possible prior to excavation. Provide for the collection and disposal of surface and subsurface water encountered during construction. Completely drain construction site during periods of construction to keep soil materials sufficiently dry. Construct storm drainage features (ponds/basins) at the earliest stages of site development, and throughout construction grade the construction area to provide positive surface water runoff away from the construction activity and provide temporary ditches, swales, and other drainage features and equipment as required to maintain dry soils. When unsuitable working platforms for equipment operation and unsuitable soil support for subsequent construction features develop, remove unsuitable material and provide new soil material as specified herein. It is the responsibility of the Contractor to assess the soil and groundwater conditions presented by the plans and specifications and to employ necessary measures to permit

CONFORMED

construction to proceed.

3.2.2 Dewatering

The dewatering system shall be installed well in advance of the excavation to dry any soils as much as possible prior to excavation. Control groundwater flowing toward or into excavations to prevent sloughing of excavation slopes and walls, boils, uplift and heave in the excavation and to eliminate interference with orderly progress of construction. Take control measures by the time the excavation reaches the water level in order to maintain the integrity of the in situ material. While the excavation is open, maintain the water level continuously, at least 2 feet below the working level. Operate dewatering system continuously until construction work below existing water levels is complete. Measure and record performance of dewatering system at same time each day by use of observation wells or piezometers installed in conjunction with the dewatering system. Relieve hydrostatic head in pervious zones below subgrade elevation in layered soils to prevent uplift.

3.2.3 Underground Utilities

The Contractor is responsible for movement of construction machinery and equipment over pipes and utilities during construction. Excavation made with power-driven equipment is not permitted within 2 feet of known Government-owned utility or subsurface construction. For work immediately adjacent to or for excavations exposing a utility or other buried obstruction, excavate by hand. Start hand excavation on each side of the indicated obstruction and continue until the obstruction is uncovered or until clearance for the new grade is assured. Support uncovered lines or other existing work affected by the contract excavation until approval for backfill is granted by the Contracting Officer. Report damage to utility lines or subsurface construction immediately to the Contracting Officer.

3.2.4 Structural Excavation

Ensure that footing subgrades have been inspected and approved by the Contracting Officer prior to concrete placement.

3.2.5 Overexcavation

If unsuitable materials are encountered during the excavation, then, the excavation need to be overexcavated a maximum of 4 feet and replace it with competent materials. The Contracting Officer shall determine the depth of overexcavation. Aggregate No. 2, per Section 32 11 23, may need to be placed in the bottom of the overexcavation to stabilize the bottom before compacted fill is placed as approved by the Contracting officer.

3.3 SHORING

3.3.1 General Requirements

Submit a Shoring plan for approval 15 days prior to starting work. Submit drawings and calculations, certified by a California registered professional engineer, describing the methods and equipment used for shoring and sheeting of excavations and backfills to prevent damages to the adjacent buildings and structures. Furnish and install shoring as necessary to protect workmen, banks, adjacent paving, buildings, structures, and utilities. Remove shoring, bracing, and sheeting as excavations are backfilled, in a manner to prevent caving.

CONFORMED

3.4 BORROW MATERIAL

Obtain material from within the limits of the project site and screen as necessary to qualify as satisfactory material. If an adequate volume of satisfactory material is not available onsite, import from approved private sources selected by the Contractor and approved by the Contracting Officer. Unless otherwise provided in the contract, the Contractor is responsible for obtaining the right to procure material, pay royalties and other charges involved, and bear the expense of developing the sources, including rights-of-way for hauling from the owners. Consider necessary clearing, grubbing, and satisfactory drainage of borrow pits and the disposal of debris thereon related operations to the borrow excavation.

3.5 SOIL STOCKPILES

Keep stockpiles in a neat and well drained condition, giving due consideration to drainage at all times. Clear, grub, and seal by rubber-tired equipment, the ground surface at stockpile locations; separately stockpile excavated satisfactory and unsatisfactory materials. Protect stockpiles of satisfactory materials from contamination which may destroy the quality and fitness of the stockpiled material. If the Contractor fails to protect the stockpiles, and any material becomes unsatisfactory, remove and replace such material with satisfactory material from approved sources.

3.6 FINAL GRADE OF SURFACES TO SUPPORT CONCRETE

Do not excavate to final grade until just before concrete is to be placed. Roughen the level surfaces, and cut the sloped surfaces, as indicated, into rough steps or benches to provide a satisfactory bond. Protect all surfaces from erosion resulting from ponding or water flow.

3.7 GROUND SURFACE PREPARATION

3.7.1 General Requirements

Remove and replace unsatisfactory material with satisfactory materials in surfaces to receive fill or in excavated areas. Scarify the surface to a depth of 6 inches and compacting as specified before the fill is started. Plow, step, bench, or break up sloped surfaces steeper than 1 vertical to 4 horizontal so that the fill material will bond with the existing material. When subgrades are less than the specified density, break up the ground surface to a minimum depth of 6 inches, pulverizing, and compacting to the specified density. When the subgrade is part fill and part excavation or natural ground, scarify the excavated or natural ground portion to a depth of 12 inches and compact it as specified for the adjacent fill.

3.7.2 Muddy or Frozen Material

Do not place material on surfaces that are muddy, frozen, or contain frost. Finish compaction by sheepsfoot rollers, pneumatic-tired rollers, steel-wheeled rollers, or other approved equipment well suited to the soil being compacted. Moisten material as necessary to provide the moisture content that will readily facilitate obtaining the specified compaction with the equipment used.

CONFORMED

3.8 UTILIZATION OF EXCAVATED MATERIALS

Dispose unsatisfactory materials removed from excavations and into designated offsite waste disposal or spoil areas. Use satisfactory material removed from excavations, insofar as practicable, in the construction of fills, subgrades, shoulders, bedding (as backfill), and for similar purposes. Do not waste any satisfactory excavated material without specific written authorization. Dispose of satisfactory material, authorized to be wasted, in designated areas approved for surplus material storage or designated waste areas. Clear and grub newly designated waste areas on Government-controlled land before disposal of waste material thereon. Do not dispose excavated material to obstruct the flow of any stream, endanger a partly finished structure, impair the efficiency or appearance of any structure, or be detrimental to the completed work in any way.

3.9 BACKFILLING AND COMPACTION

Place backfill adjacent to any and all types of structures, in 8 inches thick loose lift and compact to at least 95 percent laboratory maximum density, per ASTM D1557, to prevent wedging action or eccentric loading upon or against the structure. Prepare ground surface on which backfill is to be placed and provide compaction requirements for backfill materials in conformance with the applicable portions of paragraphs GROUND SURFACE PREPARATION. Moisture content shall be between optimum and 3% above optimum per ASTM D1557. Finish compaction by sheepsfoot rollers, pneumatic-tired rollers, steel-wheeled rollers, vibratory compactors, or other approved equipment. The choked creek bed material and topsoil material shall be compacted to 85 percent laboratory maximum density per ASTM D1557.

3.10 SPECIAL REQUIREMENTS

3.10.1 Utility Pipe Bedding And Trench Backfill

Provide utility pipe bedding and trench backfill material of the type and thickness shown in the utility relocation plans. Compact to the specifications as indicated in the Typical Trenching and Backfill Detail.

3.11 SUBGRADE PREPARATION

Scarify the ground surface to a depth of 6 inch and compacting as specified before placement of first lift of fill. Step bench sloped surfaces steeper than 1 vertical to 4 horizontal at 2 ft vertical interval intervals, top to bottom. Remove and replace unsatisfactory material with satisfactory materials.

3.12 COMPACTION

Place fill in thin lifts not to exceed 8 inches, moisture condition as necessary, and compact to at least 95 percent laboratory maximum density. Prepare ground surface on which backfill is to be placed as specified in paragraph SUBGRADE PREPARATION. Finish compaction by sheepsfoot rollers, pneumatic-tired rollers, steel-wheeled rollers, vibratory compactors, or other approved equipment. Except for paved areas and railroads, compact each layer of the embankment to at least 95 percent of laboratory maximum density per ASTM D1557.

CONFORMED

3.13 FINISHING

Finish the surface of excavations and subgrades to a smooth and compact surface in accordance with the lines, grades, and cross sections or elevations shown. Provide the degree of finish for graded areas within 0.1 foot of the grades and elevations indicated. In area needing the backfill to build the required levee, the levee slope should be overbuilt by at least 12 inches and then cut back to finish grade to ensure proper compaction along the slopes and hinge point of levee crest. Finish the surface of areas to be treated with erosion control blanket to a smoothness suitable for the application of the material. See 31 32 11 for details on erosion control blanket base preparation and installation requirements. Repair graded, topsoiled, or backfilled areas prior to acceptance of the work, and re-established grades to the required elevations and slopes.

3.14 TESTING

Perform testing by a Corps validated commercial testing laboratory or the Contractor's validated testing facility. Submit qualifications of the Corps validated commercial testing laboratory or the Contractor's validated testing facilities. If the Contractor elects to establish testing facilities, do not permit work requiring testing until the Contractor's facilities have been inspected, Corps validated and approved by the Contracting Officer.

a. Determine field in-place density in accordance with ASTM D1556 and ASTM D6938. When ASTM D6938 is used, check the calibration curves and adjust using only the sand cone method as described in ASTM D1556. ASTM D6938 results in a wet unit weight of soil in determining the moisture content of the soil when using this method. Whenever an in-place density test is performed, a sample of the tested material shall be obtained, placed in an air-tight container, and tested for moisture content using the method as described in ASTM D2216.

b. Check the calibration curves furnished with the moisture gauges along with density calibration checks as described in ASTM D6938; check the calibration of both the density and moisture gauges at the beginning of a job on each different type of material encountered and at intervals as necessary directed by the Contracting Officer. At least one adjacent sand cone test shall be performed for every ten nuclear density tests performed. If field density tests determined by the nuclear method vary by more than 3 pounds per cubic foot from comparison sand cone tests, and are consistently high or low, adjustment of the calibration curve is necessary. When test results indicate, as determined by the Contracting Officer, that compaction is not as specified, remove the material, replace and recompact to meet specification requirements.

c. Perform tests on recompacted areas to determine conformance with specification requirements. Appoint a registered professional civil engineer to certify inspections and soil testing logs and results. These certifications shall state that the tests and observations were performed by or under the direct supervision of the engineer and that the results are representative of the materials or conditions being certified by the tests.

3.14.1 Moisture Contents

In the stockpile, excavation, or borrow areas, perform a minimum of two

CONFORMED

tests per day per type of material or source of material being placed during stable weather conditions. During unstable weather, perform tests as dictated by local conditions and approved by the Contracting Officer.

3.14.2 Optimum Moisture and Laboratory Maximum Density

Perform tests for each type material or source of material including borrow material to determine the optimum moisture and laboratory maximum density values per ASTM D1557. One representative test per 500 cubic yards of fill and backfill, or when any change in material occurs which may affect the optimum moisture content or laboratory maximum density.

3.14.3 Tolerance Tests for Subgrades

Perform continuous checks on the degree of finish specified in paragraph SUBGRADE PREPARATION during construction of the subgrades.

3.15 DISPOSITION OF SURPLUS MATERIAL

Remove surplus material or other soil material not required or suitable for filling or backfilling, and brush, refuse, stumps, roots, and timber from Government property and delivered to a licensed/permitted facility or to a location approved by the Contracting Officer.

-- End of Section --

CONFORMED

SECTION TABLE OF CONTENTS

DIVISION 31 - EARTHWORK

SECTION 31 05 19

GEOTEXTILE

08/08

PART 1 GENERAL

1.1 REFERENCES
1.2 SUBMITTALS
1.3 DELIVERY, STORAGE, AND HANDLING
1.3.1 Delivery
1.3.2 Storage
1.3.3 Handling

PART 2 PRODUCTS

2.1 RAW MATERIALS
2.1.1 Geotextile
2.1.2 Thread
2.2 MANUFACTURING QUALITY CONTROL SAMPLING AND TESTING

PART 3 EXECUTION

3.1 QUALITY ASSURANCE SAMPLES AND TESTS
3.1.1 Quality Assurance Samples
3.1.2 Quality Assurance Tests
3.2 INSTALLATION
3.2.1 Subgrade Preparation
3.2.2 Placement
3.3 SEAMS
3.3.1 Overlap Seams
3.4 PROTECTION
3.5 REPAIRS
3.6 PENETRATIONS
3.7 COVERING

-- End of Section Table of Contents --

CONFORMED

SECTION 31 05 19

GEOTEXTILE
08/08

PART 1 GENERAL

1.1 REFERENCES

The publications listed below form a part of this specification to the extent referenced. The publications are referred to within the text by the basic designation only.

ASTM INTERNATIONAL (ASTM)

ASTM D4354	(2012) Sampling of Geosynthetics for Testing
ASTM D4355	(2007) Deterioration of Geotextiles from Exposure to Light, Moisture and Heat in a Xenon-Arc Type Apparatus
ASTM D4491	(1999a; R 2014; E 2014) Water Permeability of Geotextiles by Permittivity
ASTM D4533	(2011) Trapezoid Tearing Strength of Geotextiles
ASTM D4632/D4632M	(2008; R 2013; E 2013; E 2014) Grab Breaking Load and Elongation of Geotextiles
ASTM D4751	(2012) Determining Apparent Opening Size of a Geotextile
ASTM D4759	(2011) Determining the Specification Conformance of Geosynthetics
ASTM D4873	(2002; R 2009) Identification, Storage, and Handling of Geosynthetic Rolls and Samples
ASTM D6241	(2004; R 2009; E 2014) Standard Test Method for the Static Puncture Strength of Geotextiles and Geotextile-Related Products Using a 50-mm Probe

1.2 SUBMITTALS

Government approval is required for submittals with a "G" designation; submittals not having a "G" designation are for information only. When used, a designation following the "G" designation identifies the office that will review the submittal for the Government. Submit the following in accordance with Section 01 33 00 SUBMITTAL PROCEDURES:

SD-03 Product Data

CONFORMED

Thread
Manufacturing Quality Control Sampling and Testing

SD-04 Samples

Quality Assurance Samples and Tests

SD-07 Certificates

Geotextile

1.3 DELIVERY, STORAGE, AND HANDLING

Deliver, store, and handle geotextile in accordance with ASTM D4873.

1.3.1 Delivery

Notify the Contracting Officer a minimum of 24 hours prior to delivery and unloading of geotextile rolls packaged in an opaque, waterproof, protective plastic wrapping. The plastic wrapping shall not be removed until deployment. If quality assurance samples are collected, immediately rewrap rolls with the plastic wrapping. Geotextile or plastic wrapping damaged during storage or handling shall be repaired or replaced, as directed. Label each roll with the manufacturer's name, geotextile type, roll number, roll dimensions (length, width, gross weight), and date manufactured.

1.3.2 Storage

Protect rolls of geotextile from construction equipment, chemicals, sparks and flames, temperatures in excess of 160 degrees F, or any other environmental condition that may damage the physical properties of the geotextile. To protect geotextile from becoming saturated, either elevate rolls off the ground or place them on a sacrificial sheet of plastic in an area where water will not accumulate.

1.3.3 Handling

Handle and unload geotextile rolls with load carrying straps, a fork lift with a stinger bar, or an axial bar assembly. Rolls shall not be dragged along the ground, lifted by one end, or dropped to the ground.

PART 2 PRODUCTS

2.1 RAW MATERIALS

A minimum of 14 days prior to scheduled use, submit manufacturer's certificate of compliance stating that the geotextile meets the requirements of this section. For needle punched geotextiles, the manufacturer shall also certify that the geotextile has been continuously inspected using permanent on-line full-width metal detectors and does not contain any needles which could damage other geosynthetic layers. The certificate of compliance shall be attested to by a person having legal authority to bind the geotextile manufacturer.

2.1.1 Geotextile

Provide geotextile that is a nonwoven pervious sheet of polymeric material consisting of long-chain synthetic polymers composed of at least 95 percent by weight polyolefins, polyesters, or polyamides. The use of woven slit

CONFORMED

film geotextiles (i.e. geotextiles made from yarns of a flat, tape-like character) will not be allowed. Add stabilizers and/or inhibitors to the base polymer, as needed, to make the filaments resistant to deterioration by ultraviolet light, oxidation, and heat exposure. Regrind material, which consists of edge trimmings and other scraps that have never reached the consumer, may be used to produce the geotextile. Post-consumer recycled material shall not be used. Geotextile shall be formed into a network such that the filaments or yarns retain dimensional stability relative to each other, including the edges. Geotextiles shall meet the requirements specified in Table 1. Where applicable, Table 1 property values represent minimum average roll values (MARV) in the weakest principal direction. Values for AOS represent maximum average roll values.

TABLE 1
MINIMUM PHYSICAL REQUIREMENTS FOR DRAINAGE GEOTEXTILE

PROPERTY	UNITS	ACCEPTABLE VALUES	TEST METHOD
GRAB STRENGTH	LBS	205	ASTM D4632/D4632M
CBR PUNCTURE STRENGTH	LBS	500	ASTM D6241
TRAPEZOID TEAR	LBS	80	ASTM D4533
APPARENT OPENING SIZE	U.S. SIEVE	80	ASTM D4751
PERMITTIVITY	SEC -1	1.4	ASTM D4491
ULTRAVIOLET DEGRADATION	PERCENT	70 AT 500 HRS	ASTM D4355

2.1.2 Thread

A minimum of 14 days prior to scheduled use, submit proposed thread type for sewn seams along with data sheets showing the physical properties of the thread. Construct sewn seams with high-strength polyester, nylon, or other approved thread type. Thread shall have ultraviolet light stability equivalent to the geotextile and the color shall contrast with the geotextile.

2.2 MANUFACTURING QUALITY CONTROL SAMPLING AND TESTING

The Manufacturer is responsible for establishing and maintaining a quality control program to assure compliance with the requirements of the specification. A minimum of 14 days prior to scheduled use, submit manufacturer's quality control manual. Documentation describing the quality control program shall be made available upon request. Perform manufacturing quality control sampling and testing in accordance with the manufacturer's approved quality control manual. As a minimum, geotextiles shall be randomly sampled for testing in accordance with ASTM D4354, Procedure A. Acceptance of geotextile shall be in accordance with ASTM D4759. Tests not meeting the specified requirements will result in the rejection of applicable rolls.

CONFORMED

PART 3 EXECUTION

3.1 QUALITY ASSURANCE SAMPLES AND TESTS

3.1.1 Quality Assurance Samples

Provide assistance to the Contracting Officer in the collection of quality assurance samples for quality assurance testing; assign 14 days in the schedule to allow for testing. Collect samples upon delivery to the site at the request of the Contracting Officer. Identify samples with a waterproof marker by manufacturer's name, product identification, lot number, roll number, and machine direction. The date and a unique sample number shall also be noted on the sample. Discard the outer layer of the geotextile roll prior to sampling a roll. Samples shall then be collected by cutting the full-width of the geotextile sheet a minimum of 3 feet long in the machine direction. Rolls which are sampled shall be immediately resealed in their protective covering.

3.1.2 Quality Assurance Tests

Provide quality assurance samples to an Independent Laboratory. Samples will be tested to verify that geotextile meets the requirements specified in Table 1. Test method ASTM D4355 shall not be performed on the collected samples. Geotextile product acceptance shall be based on ASTM D4759. Tests not meeting the specified requirements will result in the rejection of applicable rolls.

3.2 INSTALLATION

3.2.1 Subgrade Preparation

The surface underlying the geotextile shall be smooth and free of ruts or protrusions which could damage the geotextile. Subgrade materials and compaction requirements shall be in accordance with Section 31 00 00.

3.2.2 Placement

Notify the Contracting Officer a minimum of 24 hours prior to installation of geotextile. Geotextile rolls which are damaged or contain imperfections shall be repaired or replaced as directed. The geotextile shall be laid flat and smooth so that it is in direct contact with the subgrade. The geotextile shall also be free of tensile stresses, folds, and wrinkles. On slopes steeper than 10 horizontal on 1 vertical, lay the geotextile with the machine direction of the fabric parallel to the slope direction.

3.3 SEAMS

3.3.1 Overlap Seams

Continuously overlap geotextile panels a minimum of 12 inches at all longitudinal and transverse joints. Where seams must be oriented across the slope, lap the upper panel over the lower panel. If approved, sewn seams may be used instead of overlapped seams.

3.4 PROTECTION

Protect the geotextile during installation from clogging, tears, and other damage. Damaged geotextile shall be repaired or replaced as directed. Use

CONFORMED

adequate ballast (e.g. sand bags) to prevent uplift by wind. The geotextile shall not be left uncovered for more than 14 days after installation.

3.5 REPAIRS

Repair torn or damaged geotextile. Clogged areas of geotextile shall be removed. Perform repairs by placing a patch of the same type of geotextile over the damaged area. The patch shall extend a minimum of 12 inches beyond the edge of the damaged area. Patches shall be continuously fastened using approved methods. The machine direction of the patch shall be aligned with the machine direction of the geotextile being repaired. Remove and replace geotextile rolls which cannot be repaired. Repairs shall be performed at no additional cost to the Government

3.6 PENETRATIONS

Construct engineered penetrations of the geotextile as shown on the drawings.

3.7 COVERING

Do not cover geotextile prior to inspection and approval by the Contracting Officer. Place cover soil in a manner that prevents soil from entering the geotextile overlap zone, prevents tensile stress from being mobilized in the geotextile, and prevents wrinkles from folding over onto themselves. On side slopes, soil backfill shall be placed from the bottom of the slope upward. Cover soil shall not be dropped onto the geotextile from a height greater than 3 feet. No equipment shall be operated directly on top of the geotextile without approval of the Contracting Officer. Use equipment with ground pressures less than 7 psi to place the first lift over the geotextile. A minimum of 12 inches of soil shall be maintained between full-scale construction equipment and the geotextile. Cover soil material type, compaction, and testing requirements are described in Section 31 00 00 EARTHWORK. Equipment placing cover soil shall not stop abruptly, make sharp turns, spin their wheels, or travel at speeds exceeding 5 mph.

-- End of Section --

CONFORMED

SECTION TABLE OF CONTENTS

DIVISION 31 - EARTHWORK

SECTION 31 11 00

CLEARING AND GRUBBING

08/08

PART 1 GENERAL

1.1 SUBMITTALS
1.2 DELIVERY, STORAGE, AND HANDLING

PART 2 PRODUCTS

2.1 TREE WOUND PAINT
2.2 HERBICIDE

PART 3 EXECUTION

3.1 PROTECTION
3.1.1 General
3.1.2 Roads and Walks
3.1.3 Trees, Shrubs, and Existing Facilities
3.1.4 Utility Lines
3.2 CLEARING
3.3 TREE REMOVAL
3.4 PRUNING
3.5 GRUBBING
3.6 DISPOSAL OF MATERIALS
3.6.1 Saleable Timber
3.6.2 Nonsaleable Materials

-- End of Section Table of Contents --

CONFORMED

SECTION 31 11 00

CLEARING AND GRUBBING
08/08

PART 1 GENERAL

1.1 SUBMITTALS

Government approval is required for submittals with a "G" designation; submittals not having a "G" designation are for information only. When used, a designation following the "G" designation identifies the office that will review the submittal for the Government. Submit the following in accordance with Section 01 33 00 SUBMITTAL PROCEDURES:

SD-03 Product Data

Nonsaleable Materials; G

SD-04 Samples

Tree wound paint
Herbicide

1.2 DELIVERY, STORAGE, AND HANDLING

Deliver materials to store at the site, and handle in a manner which will maintain the materials in their original manufactured or fabricated condition until ready for use.

PART 2 PRODUCTS

2.1 TREE WOUND PAINT

Submit samples in cans with manufacturer's label of bituminous based paint of standard manufacture specially formulated for tree wounds.

2.2 HERBICIDE

Comply with Federal Insecticide, Fungicide, and Rodenticide Act (Title 7 U.S.C. Section 136) for requirements on Contractor's licensing, certification and record keeping. Contact the command Pest Control Coordinator prior to starting work. Submit samples in cans with manufacturer's label.

PART 3 EXECUTION

3.1 PROTECTION

3.1.1 General

As described in Section 01 57 20.00 10 ENVIRONMENTAL PROTECTION, nesting bird surveys will be required prior to site disturbance.

CONFORMED

3.1.2 Roads and Walks

Keep roads and walks free of dirt and debris at all times.

3.1.3 Trees, Shrubs, and Existing Facilities

Protect trees and vegetation to be left standing from damage incident to clearing, grubbing, and construction operations by the erection of barriers or by such other means as the circumstances require.

3.1.4 Utility Lines

Protect existing utility lines that are indicated to remain from damage. Notify the Contracting Officer immediately of damage to or an encounter with an unknown existing utility line. The Contractor is responsible for the repairs of damage to existing utility lines that are indicated or made known to the Contractor prior to start of clearing and grubbing operations. When utility lines which are to be removed are encountered within the area of operations, notify the Contracting Officer in ample time to minimize interruption of the service.

3.2 CLEARING

Clearing shall consist of the felling, trimming, and cutting of trees into sections and the satisfactory disposal of the trees and other vegetation designated for removal, including downed timber, snags, brush, and rubbish occurring within the areas to be cleared. Clearing shall also include the removal and disposal of structures that obtrude, encroach upon, or otherwise obstruct the work. Trees, stumps, roots, brush, and other vegetation in areas to be cleared shall be cut off flush with or below the original ground surface, except such trees and vegetation as may be indicated or directed to be left standing. Trees designated to be left standing within the cleared areas shall be trimmed of dead branches 1-1/2 inches or more in diameter and shall be trimmed of all branches the heights indicated or directed. Limbs and branches to be trimmed shall be neatly cut close to the bole of the tree or main branches. Cuts more than 1-1/2 inches in diameter shall be painted with an approved tree-wound paint. Apply herbicide in accordance with the manufacturer's label to the top surface of stumps designated not to be removed.

3.3 TREE REMOVAL

Where indicated or directed, trees and stumps that are designated as trees shall be removed from areas outside those areas designated for clearing and grubbing. This work shall include the felling of such trees and the removal of their stumps and roots as specified in paragraph GRUBBING. Trees shall be disposed of as specified in paragraph DISPOSAL OF MATERIALS. All required tree removal activities shall be performed by or under the direct supervision of a certified arborist.

3.4 PRUNING

Prune trees designated to be left standing within the cleared areas of dead branches 1-1/2 inches or more in diameter; and trim branches to heights and in a manner as indicated. Neatly cut limbs and branches to be trimmed close to the bole of the tree or main branches. Paint cuts more than 1-1/4 inches in diameter with an approved tree wound paint.

CONFORMED

3.5 GRUBBING

Grubbing consists of the removal and disposal of stumps, roots larger than 3 inches in diameter, and matted roots from the designated grubbing areas. Remove material to be grubbed, together with logs and other organic or metallic debris not suitable for foundation purposes, to a depth of not less than 18 inches below the original surface level of the ground in areas indicated to be grubbed and in areas indicated as construction areas under this contract, such as areas for buildings, and areas to be paved. Fill depressions made by grubbing with suitable material and compact to make the surface conform with the original adjacent surface of the ground. When completed, the backfilled and compacted area shall remain firm and stable, as demonstrated by the lack of observable signs of deformation from wheel loading, even when subsequent courses of material are placed over the area.

3.6 DISPOSAL OF MATERIALS

3.6.1 Saleable Timber

4. All timber on the project site noted for clearing and grubbing shall become the property of the Contractor, and shall be removed from the project site and disposed of off stations.

3.6.2 Nonsaleable Materials

Written permission to dispose of such products on private property shall be filed with the Contracting Officer. Logs, stumps, roots, brush, rotten wood, and other refuse from the clearing and grubbing operations, except for salable timber, shall be disposed of outside the limits of Government-controlled land at the Contractor's responsibility, except when otherwise directed in writing. Such directive will state the conditions covering the disposal of such products and will also state the areas in which they may be placed.

-- End of Section --

CONFORMED

SECTION 31 32 11

SOIL SURFACE EROSION CONTROL

08/08

PART 1 GENERAL

1.1 SUMMARY

The work consists of furnishing and installing soil surface erosion control materials, including fine grading, blanketing, stapling, mulching and miscellaneous related work, within project limits and in areas outside the project limits where the soil surface is disturbed from work under this contract at the designated locations. This work includes all necessary materials, labor, supervision and equipment for installation of a complete system. Submit a listing of equipment to be used for the application of erosion control materials. Coordinate this section with the requirements of Section 31 00 00 EARTHWORK and Section 32 92 19 SEEDING\\tts318fs1.tt.local\SWG\Projects\WATR\SPECSINTACT\JOBS\T31331\prntdata\Word\.doc.

1.2 REFERENCES

The publications listed below form a part of this specification to the extent referenced. The publications are referred to within the text by the basic designation only.

ASTM INTERNATIONAL (ASTM)

ASTM D4972	(2013) pH of Soils
ASTM D5268	(2013) Topsoil Used for Landscaping Purposes
ASTM D698	(2012; E 2014) Laboratory Compaction Characteristics of Soil Using Standard Effort (12,400 ft-lbf/cu. ft. (600 kN-m/cu. m.))

1.3 SUBMITTALS

Government approval is required for submittals with a "G" designation; submittals not having a "G" designation are for information only. When used, a designation following the "G" designation identifies the office that will review the submittal for the Government. Submit the following in accordance with Section 01 33 00 SUBMITTAL PROCEDURES:

SD-02 Shop Drawings

Layout; G
Obstructions Below Ground; G
Maintenance Record

SD-03 Product Data

CONFORMED

Erosion Control Blankets Type XII
Equipment
Finished Grade

Submit manufacturer's literature including physical characteristics, application and installation instructions.

SD-04 Samples

In addition to the samples, submit certification of recycled content or Statement of recycled content. Also submit certification of origin including the name, address and telephone number of manufacturer.

Erosion control blankets

6 inch square

SD-06 Test Reports

Erosion Control Blankets

SD-07 Certificates

Installer's Qualification

SD-10 Operation and Maintenance Data

Maintenance Instructions

SD-11 Closeout Submittals

Erosion Control Blankets Type XII; (LEED)

1.4 QUALITY ASSURANCE

1.4.1 Installer's Qualification

The installer shall be certified by the manufacturer for training and experience installing the material. Submit the installer's company name and address, and/or certification.

1.4.2 Substitutions

Substitutions will not be allowed without written request and approval from the Contracting Officer.

1.5 DELIVERY, STORAGE, AND HANDLING

Prior to delivery of materials, submit certificates of compliance attesting that materials meet the specified requirements. Store materials in designated areas and as recommended by the manufacturer protected from the elements, direct exposure, and damage. Do not drop containers from trucks. Material shall be free of defects that would void required performance or warranty. Deliver geosynthetic binders and synthetic soil binders in the manufacturer's original sealed containers and stored in a secure area.

CONFORMED

a. Furnish erosion control blankets and geotextile fabric in rolls with suitable wrapping to protect against moisture and extended ultraviolet exposure prior to placement. Label erosion control blanket and geotextile fabric rolls to provide identification sufficient for inventory and quality control purposes.

c. Inspect seed upon arrival at the jobsite for conformity to species and quality. Seed that is wet, moldy, or bears a test date five months or older, shall be rejected.

1.6 WARRANTY

Erosion control material shall have a warranty for use and durable condition for project specific installations. Temporary erosion control materials shall carry a minimum eighteen month warranty. Permanent erosion control materials shall carry a minimum three year warranty.

PART 2 PRODUCTS

2.1 EROSION CONTROL BLANKETS

2.1.1 Erosion Control Blankets Type XII

Erosion control blanket shall be woven from machine twisted bristle coir twines. This 100% biodegradable, strong and durable blanket provide higher erosion resistance while supporting growth and development of vegetation. These semi-permanent mats have functional field longevity of 4-6 years. If the vegetation fails to establish, the open weave in the mat allows seeding over the mat. The erosion control blankets shall have the following properties:

	Test Method	Value
Weight, oz/sy	ASTM D3776	17.8
Thickness, inches	ASTM D1777	0.35
Dry Tensile Strength lbs/ft Machine Direction Cross Direction	ASTM D4595	 1130 1040
Wet Tensile Strength, lbs/ft Machine Direction Cross Direction	ASTM D4595	 910 870
Wet Elongation at failure Machine Direction Cross Direction	ASTM D4595	 32 26
Open Area, %		58
Recommended slope		> 2:1

2.1.2 Staples

Staples shall be as recommended by the manufacturer.

CONFORMED

2.2 WATER

Unless otherwise directed, water is the responsibility of the Contractor. Water shall be reclaimed water.

PART 3 EXECUTION

3.1 WEATHER CONDITIONS

Perform erosion control operations under favorable weather conditions; when excessive moisture, frozen ground or other unsatisfactory conditions prevail, the work shall be stopped as directed. When special conditions warrant a variance to earthwork operations, submit a revised construction schedule for approval. Do not apply erosion control materials in adverse weather conditions which could affect their performance.

3.1.1 Finished Grade

Provide condition of finish grade status prior to installation, location of underground utilities and facilities. Verify that finished grades are as indicated on the drawings; complete finish grading and compaction in accordance with Section 31 00 00 EARTHWORK, prior to the commencement of the work. Verify and mark the location of underground utilities and facilities in the area of the work. Repair damage to underground utilities and facilities at the Contractor's expense.

3.1.2 Placement of Erosion Control Blankets

Before placing the erosion control blankets, ensure the subgrade has been graded smooth; has no depressed, void areas; is free from obstructions, such as tree roots, projecting stones or other foreign matter. Vehicles will not be permitted directly on the blankets.

3.1.3 Synthetic Grid

Before placing the grid system, ensure that the subgrade has been properly grubbed of large roots and rocks; compacted; has been graded smooth; has no depressed, void, soft or uncompacted areas; is free from obstructions, such as tree roots, projecting stones or other foreign matter; and has been seeded.

3.1.4 Concrete Cellular Block

Before placing geotextile fabric under cellular block, ensure that the subgrade has been properly compacted; has been graded smooth; has no depressed, void, soft or uncompacted areas; is free from obstructions, such as tree roots, projecting stones or other foreign matter; and has been seeded. Compact subgrade compaction to at least 90 percent of the maximum dry density at optimum moisture content, as determined by ASTM D698, with a tolerance of plus or minus 1 inch of the design elevation.

3.2 SITE PREPARATION

3.2.1 Soil Test

Test soil in accordance with ASTM D5268 and ASTM D4972 for determining the particle size and mechanical analysis. Sample collection onsite shall be

CONFORMED

random over the entire site. The test shall determine the soil particle size as compatible for the specified material.

3.2.2 Layout

Submit scale drawings defining areas to receive recommended materials as required by federal, state or local regulations. Erosion control material locations may be adjusted to meet field conditions. When soil tests result in unacceptable particle sizes, submit a shop drawing indicating the corrective measures.

3.2.3 Protecting Existing Vegetation

When there are established lawns in the work area, the turf shall be covered and/or protected or replaced after construction operations. Identify existing trees, shrubs, plant beds, and landscape features that are to be preserved on site by appropriate tags and barricade with reusable, high-visibility fencing along the dripline. Mitigate damage to existing trees at no additional cost to the Government. Damage shall be assessed by a state certified arborist or other approved professional using the National Arborist Association's tree valuation guideline.

3.2.4 Obstructions Below Ground

When obstructions below ground affect the work, submit shop drawings showing proposed adjustments to placement of erosion control material for approval.

3.3 INSTALLATION

3.3.1 Erosion Control Blankets

a. Install erosion control blankets as indicated and in accordance with manufacturer's recommendations. The extent of erosion control blankets shall be as indicated.

b. Orient erosion control blankets in vertical strips and anchored with staples, as indicated. Abut adjacent strips to allow for installation of a common row of staples. Overlap horizontal joints between erosion control blankets sufficiently to accommodate a common row of staples with the uphill end on top.

c. Where exposed to overland sheet flow, locate a trench at the uphill termination. Staple the erosion control blanket to the bottom of the trench. Backfill and compact the trench as required.

d. Where terminating in a channel containing an installed blanket, the erosion control blanket shall overlap installed blanket sufficiently to accommodate a common row of staples.

3.4 CLEAN-UP

Dispose of excess material, debris, and waste materials offsite at an approved landfill or recycling center. Clear adjacent paved areas. Immediately upon completion of the installation in an area, protect the area against traffic or other use by erecting barricades and providing signage as required, or as directed.

CONFORMED

3.5 WATERING SEED

Start watering immediately after installing erosion control blanket type XI (revegetation mat). Apply water to supplement rainfall at a sufficient rate to ensure moist soil conditions to a minimum 1 inch depth. Prevent run-off and puddling. Do no drive watering trucks over turf areas, unless otherwise directed. Prevent watering of other adjacent areas or plant material.

3.6 MAINTENANCE RECORD

Furnish a record describing the maintenance work performed, record of measurements and findings for product failure, recommendations for repair, and products replaced.

3.6.1 Maintenance

Maintenance shall include eradicating weeds; protecting embankments and ditches from surface erosion; maintaining the performance of the erosion control materials and mulch; protecting installed areas from traffic.

3.6.2 Maintenance Instructions

Furnish written instructions containing drawings and other necessary information, describing the care of the installed material; including, when and where maintenance should occur, and the procedures for material replacement. Submit instruction for year-round care of installed material. Include manufacturer supplied spare parts.

3.6.3 Patching and Replacement

Unless otherwise directed, material shall be placed, seamed or patched as recommended by the manufacturer. Remove material not meeting the required performance as a result of placement, seaming or patching from the site. Replace the unacceptable material at no additional cost to the Government.

-- End of Section --

CONFORMED

SECTION TABLE OF CONTENTS

DIVISION 32 - EXTERIOR IMPROVEMENTS

SECTION 32 11 23

AGGREGATE AND/OR GRADED-CRUSHED AGGREGATE BASE COURSE

08/08

PART 1 GENERAL

1.1 REFERENCES
1.2 DEFINITIONS
1.2.1 Aggregate Base Course
1.2.2 Degree of Compaction
1.2.3 Moisture Content
1.3 SUBMITTALS
1.4 QUALITY ASSURANCE
1.4.1 Sampling
1.4.2 Tests
1.4.2.1 Sieve Analysis
1.4.2.2 Liquid Limit and Plasticity Index
1.4.2.3 Moisture-Density Determinations
1.4.2.4 Field Density Tests
1.4.2.5 Wear Test
1.4.3 Testing Frequency
1.4.3.1 Initial Tests
1.4.3.2 In Place Tests
1.4.4 Approval of Material
1.4.5 Waybills and Delivery Tickets
1.5 ENVIRONMENTAL REQUIREMENTS

PART 2 PRODUCTS

2.1 PLANT, EQUIPMENT, AND TOOLS
2.2 AGGREGATES
2.2.1 Coarse Aggregate
2.2.1.1 Aggregate Base Course
2.2.2 Fine Aggregate
2.2.2.1 Aggregate Base Course
2.2.3 Gradation Requirements
2.3 LIQUID LIMIT AND PLASTICITY INDEX

PART 3 EXECUTION

3.1 GENERAL REQUIREMENTS
3.2 OPERATION OF AGGREGATE SOURCES
3.3 STOCKPILING MATERIAL
3.4 PREPARATION OF UNDERLYING COURSE
3.5 INSTALLATION
3.5.1 Mixing the Materials
3.5.2 Placing
3.5.3 Grade Control
3.5.4 Edges of Base Course
3.5.5 Compaction

CONFORMED

3.5.6 Thickness
3.5.7 Proof Rolling
3.5.8 Finishing
3.5.9 Smoothness
3.6 TRAFFIC
3.7 MAINTENANCE
3.8 DISPOSAL OF UNSATISFACTORY MATERIALS

-- End of Section Table of Contents --

CONFORMED

SECTION 32 11 23

AGGREGATE AND/OR GRADED-CRUSHED AGGREGATE BASE COURSE
08/08

PART 1 GENERAL

1.1 REFERENCES

The publications listed below form a part of this specification to the extent referenced. The publications are referred to in the text by basic designation only.

ASTM INTERNATIONAL (ASTM)

ASTM C117	(2013) Standard Test Method for Materials Finer than 75-um (No. 200) Sieve in Mineral Aggregates by Washing
ASTM C127	(2015) Standard Test Method for Density, Relative Density (Specific Gravity), and Absorption of Coarse Aggregate
ASTM C128	(2015) Standard Test Method for Density, Relative Density (Specific Gravity), and Absorption of Fine Aggregate
ASTM C131	(2006) Standard Test Method for Resistance to Degradation of Small-Size Coarse Aggregate by Abrasion and Impact in the Los Angeles Machine
ASTM C136	(2006) Standard Test Method for Sieve Analysis of Fine and Coarse Aggregates
ASTM D1556	(2007) Density and Unit Weight of Soil in Place by the Sand-Cone Method
ASTM D1557	(2012) Standard Test Methods for Laboratory Compaction Characteristics of Soil Using Modified Effort (56,000 ft-lbf/ft3) (2700 kN-m/m3)
ASTM D2216	(2010) Laboratory Determination of Water (Moisture) Content of Soil and Rock by Mass
ASTM D2217	(1985; R 1998) Wet Preparation of Soil Samples for Particle-Size Analysis and Determination of Soil Constants
ASTM D2487	(2011) Soils for Engineering Purposes (Unified Soil Classification System)
ASTM D4318	(2010; E 2014) Liquid Limit, Plastic Limit, and Plasticity Index of Soils

CONFORMED

ASTM D6938	(2010) Standard Test Method for In-Place Density and Water Content of Soil and Soil-Aggregate by Nuclear Methods (Shallow Depth)
ASTM D75/D75M	(2014) Standard Practice for Sampling Aggregates
ASTM E11	(2015) Wire Cloth and Sieves for Testing Purposes

1.2 DEFINITIONS

For the purposes of this specification, the following definitions apply.

1.2.1 Aggregate Base Course

Aggregate base course (ABC) is well graded, durable aggregate composed of gravel, sand, and binder, uniformly moistened and mechanically stabilized by compaction.

1.2.2 Degree of Compaction

Degree of compaction is the ratio of the field dry density to the maximum dry density determined in the laboratory, expresses as a percentage of the maximum density. The laboratory maximum dry density shall be determined by ASTM D1557 and the field dry density shall be determined by ASTM D1556.

1.2.3 Moisture Content

Moisture content is the ratio of the weight of the water to the weight of the solid matter expressed as a percentage and it is determined by ASTM D2216.

1.3 SUBMITTALS

Government approval is required for submittals with a "G" designation; submittals not having a "G" designation are for information only. When used, a designation following the "G" designation identifies the office that will review the submittal for the Government. Submit the following in accordance with Section 01 33 00 SUBMITTAL PROCEDURES:

SD-03 Product Data

Plant, Equipment, and Tools
List of proposed equipment to be used in the performance of construction work, including descriptive data.

Waybills and Delivery Tickets
Copies of waybills and delivery tickets during the progress of the work.

SD-06 Test Reports

Sampling and Testing; G, ED-GD
Certified copies of test results for approval not less than 30 days before material is required for the work. Calibration curves and related test results prior to using the device or equipment being calibrated.

CONFORMED

Field Density Tests; G, RE
Copies of field test results within 24 hours after the tests are performed.

1.4 QUALITY ASSURANCE

Sampling and testing are the responsibility of the Contractor and performed by a testing laboratory approved in accordance with Section 01 45 00.00 10 QUALITY CONTROL. Work requiring testing will not be permitted until the testing laboratory has been inspected and approved. Test the materials to establish compliance with the specified requirements; perform testing at the specified frequency. The Contracting Officer may specify the time and location of the tests. Furnish copies of test results to the Contracting Officer within 24 hours of completion of the tests.

1.4.1 Sampling

Take samples for laboratory testing in conformance with ASTM D75/D75M. When deemed necessary, the sampling will be observed by the Contracting Officer.

1.4.2 Tests

Perform the following tests in conformance with the applicable standards listed.

1.4.2.1 Sieve Analysis

Make sieve analysis in conformance with ASTM C117 and ASTM C136. Sieves shall conform to ASTM E11. After the initial test, a minimum of one analysis shall be performed for each 500 square yards of material placed, with a minimum of three analysis for each day's placed until the course is completed.

1.4.2.2 Liquid Limit and Plasticity Index

Determine liquid limit and plasticity index in accordance with ASTM D4318 Method A on samples prepared in accordance with ASTM D2217.

1.4.2.3 Moisture-Density Determinations

Determine the laboratory maximum dry density and optimum moisture content in accordance with ASTM D1557.

1.4.2.4 Field Density Tests

Measure field density in accordance with ASTM D1556 or ASTM D6938. For the method presented in ASTM D1556 use the base plate as shown in the drawing. For the method presented in ASTM D6938 check the calibration curves and adjust them, if necessary, using only the sand cone method as described in paragraph Calibration, of the ASTM publication. Tests performed in accordance with ASTM D6938 result in a wet unit weight of soil, and ASTM D6938 shall be used to determine the moisture content of the soil. The calibration curves furnished with the moisture gauges shall also be checked along with density calibration checks as described in ASTM D6938. The calibration checks of both the density and moisture gauges shall be made by the prepared containers of material method, as described in paragraph Calibration of ASTM D6938, on each different type of material

CONFORMED

being tested at the beginning of a job and at intervals as directed. One density test using ASTM D1557 shall be taken for every five density tests performed using ASTM D6938 test method.

1.4.2.5 Wear Test

Perform wear tests on ABC course material in conformance with ASTM C131.

1.4.3 Testing Frequency

1.4.3.1 Initial Tests

Perform one of each of the following tests, on the proposed material prior to commencing construction, to demonstrate that the proposed material meets all specified requirements when furnished. If materials from more than one source are going to be utilized, this testing shall be completed for each source.

a. Sieve Analysis.

b. Liquid limit and plasticity index.

c. Moisture-density relationship.

d. Wear.

1.4.3.2 In Place Tests

Perform each of the following tests on samples taken from the placed and compacted ABC. Samples shall be taken and tested at the rates indicated.

a. Perform density tests on every lift of material placed and at a frequency of one set of tests for every 250 square yards or portion thereof, of completed area.

b. Perform sieve analysis on every lift of material placed and at a frequency of one sieve analysis for every 500 square yards or portion thereof, with a minimum of three analysis for each day's placed material until the course is completed.

c. Perform liquid limit and plasticity index tests at the same frequency as the sieve analysis.

d. Measure the total thickness of the base course at intervals, in such a manner as to ensure one measurement for each 500 square yards of base course. Measurements shall be made in 3 inch diameter test holes penetrating the base course.

1.4.4 Approval of Material

Select the source of the material 30 days prior to the time the material will be required in the work. Tentative approval of material will be based on initial test results. Final approval of the materials will be based on sieve analysis, liquid limit, and plasticity index tests performed on samples taken from the completed and fully compacted course(s).

1.4.5 Waybills and Delivery Tickets

Before the final statement is allowed, file certified waybills and

CONFORMED

certified delivery tickets for all aggregates actually used, as specified in the Submittals paragraph.

1.5 ENVIRONMENTAL REQUIREMENTS

Perform construction when the atmospheric temperature is above 35 degrees F. When the temperature falls below 35 degrees F, protect all completed areas by approved methods against detrimental effects of freezing. Correct completed areas damaged by freezing, rainfall, or other weather conditions to meet specified requirements.

PART 2 PRODUCTS

2.1 PLANT, EQUIPMENT, AND TOOLS

All plant, equipment, and tools used in the performance of the work will be subject to approval before the work is started and shall be maintained in satisfactory working condition at all times. Submit a list of proposed equipment, including descriptive data. Provide adequate equipment having the capability of producing the required compaction, meeting grade controls, thickness control, and smoothness requirements as set forth herein.

2.2 AGGREGATES

Provide ABC consisting of clean, sound, durable particles of crushed stone, crushed gravel, angular sand, or other approved material. ABC shall be free of lumps of clay, organic matter, and other objectionable materials or coatings. The portion retained on the No. 4 sieve is known as coarse aggregate; that portion passing the No. 4 sieve is known as fine aggregate.

2.2.1 Coarse Aggregate

Provide coarse aggregates with angular particles of uniform density. When the coarse aggregate is supplied from more than one source, aggregate from each source shall meet the specified requirements and shall be stockpiled separately.

a. Crushed Gravel: Crushed gravel manufactured by crushing gravels, and meets all the requirements specified below.

b. Crushed Stone: Provide crushed stone consisting of freshly mined quarry rock, meeting all the requirements specified below.

2.2.1.1 Aggregate Base Course

ABC coarse aggregate shall not show more than 50 percent loss when subjected to the Los Angeles abrasion test in accordance with ASTM C131. The amount of flat and elongated particles shall not exceed 30 percent. An elongated particle is one having a ratio of length to width greater than 3. In the portion retained on each sieve specified, the crushed aggregates shall contain at least 50 percent by weight of crushed pieces having two or more freshly fractured faces with the area of each face being at least equal to 75 percent of the smallest midsectional area of the piece. When two fractures are contiguous, the angle between planes of the fractures must be at least 30 degrees in order to count as two fractured faces. Crushed gravel shall be manufactured from gravel particles 50 percent of which, by weight, are retained on the maximum size sieve listed in TABLE 1.

CONFORMED

2.2.2 Fine Aggregate

Fine aggregates shall be angular particles of uniform density. When the fine aggregate is supplied from more than one source, aggregate from each source shall meet the specified requirements.

2.2.2.1 Aggregate Base Course

ABC fine aggregate shall consist of screenings, angular sand, crushed recycled concrete fines, or other finely divided mineral matter processed or naturally combined with the coarse aggregate.

2.2.3 Gradation Requirements

Apply the specified gradation requirements to the completed base course. The aggregates shall be continuously well graded within the limits specified in TABLE 1. Sieves shall conform to ASTM E11.

TABLE 1. GRADATION OF AGGREGATES	
Percentage by Weight Passing Square-Mesh Sieve	
Sieve Designation	No. 2
1-1/2 inch	100
1 inch	60-100
1/2 inch	30-65
No. 4	20-50
No. 10	15-40
No. 40	5-25
No. 200	0-8
NOTE 1: The values are based on aggregates of uniform specific gravity. If materials from different sources are used for the coarse and fine aggregates, they shall be tested in accordance with ASTM C127 and ASTM C128 to determine their specific gravities. If the specific gravities vary by more than 10 percent, the percentages passing the various sieves shall be corrected as directed by the Contracting Officer.	

2.3 LIQUID LIMIT AND PLASTICITY INDEX

Apply liquid limit and plasticity index requirements to the completed course and to any component that is blended to meet the required gradation. The portion of any component or of the completed course passing the No. 40 sieve shall be either nonplastic or have a liquid limit not greater than 25 and a plasticity index not greater than 5.

CONFORMED

PART 3 EXECUTION

3.1 GENERAL REQUIREMENTS

When the ABC is constructed in more than one layer, clean the previously constructed layer of loose and foreign matter by sweeping with power sweepers or power brooms, except that hand brooms may be used in areas where power cleaning is not practicable. Provide adequate drainage during the entire period of construction to prevent water from collecting or standing on the working area. Provide line and grade stakes as necessary for control. Grade stakes shall be in lines parallel to the centerline of the area under construction and suitably spaced for string lining.

3.2 OPERATION OF AGGREGATE SOURCES

Clearing, stripping, and excavating are the responsibility of the Contractor. Operate the aggregate sources to produce the quantity and quality of materials meeting the specified requirements in the specified time limit. Aggregate sources on private lands shall be conditioned in agreement with local laws or authorities.

3.3 STOCKPILING MATERIAL

Clear and level storage sites prior to stockpiling of material. Stockpile all materials, including approved material available from excavation and grading, in the manner and at the locations designated. Aggregates shall be stockpiled on the cleared and leveled areas designated by the Contracting Officer to prevent segregation. Materials obtained from different sources shall be stockpiled separately.

3.4 PREPARATION OF UNDERLYING COURSE

Prior to constructing the base course(s), the underlying course or subgrade shall be cleaned of all foreign substances. At the time of construction of the base course(s), the underlying course shall contain no frozen material. The surface of the underlying course or subgrade shall meet specified compaction and surface tolerances. The underlying course shall conform to Section 31 00 00 EARTHWORK. Ruts or soft yielding spots in the underlying courses, areas having inadequate compaction, and deviations of the surface from the requirements set forth herein shall be corrected by loosening and removing soft or unsatisfactory material and by adding approved material, reshaping to line and grade, and recompacting to specified density requirements. For cohesionless underlying courses containing sands or gravels, as defined in ASTM D2487, the surface shall be stabilized prior to placement of the base course(s). Stabilization shall be accomplished by mixing ABC into the underlying course and compacting by approved methods. The stabilized material shall be considered as part of the underlying course and shall meet all requirements of the underlying course. The finished underlying course shall not be disturbed by traffic or other operations and shall be maintained in a satisfactory condition until the base course is placed.

3.5 INSTALLATION

3.5.1 Mixing the Materials

Mix the coarse and fine aggregates in a stationary plant, or in a traveling plant or bucket loader on an approved paved working area. Make adjustments in mixing procedures or in equipment, as directed, to obtain true grades,

CONFORMED

to minimize segregation or degradation, to obtain the required water content, and to insure a satisfactory base course meeting all requirements of this specification.

3.5.2 Placing

Place the mixed material on the prepared subgrade or subbase in layers of uniform thickness with an approved spreader. When a compacted layer 6 inches or less in thickness is required, place the material in a single layer. When a compacted layer in excess of 6 inches is required, place the material in layers of equal thickness. No layer shall be thicker than 6 inches or thinner than 3 inches when compacted. The layers shall be so placed that when compacted they will be true to the grades or levels required with the least possible surface disturbance. Where the base course is placed in more than one layer, the previously constructed layers shall be cleaned of loose and foreign matter by sweeping with power sweepers, power brooms, or hand brooms, as directed. Such adjustments in placing procedures or equipment shall be made as may be directed to obtain true grades, to minimize segregation and degradation, to adjust the water content, and to insure an acceptable base course.

3.5.3 Grade Control

The finished and completed base course shall conform to the lines, grades, and cross sections shown. Underlying material(s) shall be excavated and prepared at sufficient depth for the required base course thickness so that the finished base course and the subsequent surface course will meet the designated grades.

3.5.4 Edges of Base Course

The base course shall be placed so that the completed section will be a minimum of 2 feet wider, on all sides, than the next layer that will be placed above it. Additionally, place approved fill material along the outer edges of the base course in sufficient quantities to compact to the thickness of the course being constructed, or to the thickness of each layer in a multiple layer course, allowing in each operation at least a 2 foot width of this material to be rolled and compacted simultaneously with rolling and compacting of each layer of base course. If this base course material is to be placed adjacent to another pavement section, then the layers for both of these sections shall be placed and compacted along this edge at the same time.

3.5.5 Compaction

Compact each layer of the base course, as specified, with approved compaction equipment. Maintain water content during the compaction procedure to within plus or minus 2 percent of the optimum water content determined from laboratory tests as specified in paragraph Quality Assurance. Begin rolling at the outside edge of the surface and proceed to the center, overlapping on successive trips at least one-half the width of the roller. Alternate trips of the roller shall be slightly different lengths. Speed of the roller shall be such that displacement of the aggregate does not occur. In all places not accessible to the rollers, the mixture shall be compacted with hand-operated power tampers. Continue compaction until each layer has a degree of compaction that is at least 100 percent of laboratory maximum density through the full depth of the layer. Make such adjustments in compacting or finishing procedures as may be directed to obtain true grades, to minimize segregation and degradation, to reduce or increase

CONFORMED

water content, and to ensure a satisfactory base course. Any materials that are found to be unsatisfactory shall be removed and replaced with satisfactory material or reworked, as directed, to meet the requirements of this specification.

3.5.6 Thickness

Construct the compacted thickness of the base course as indicated. No individual layer shall be thicker than 6 inches nor be thinner than 3 inches in compacted thickness. The total compacted thickness of the base course(s) shall be within 1/2 inch of the thickness indicated. Where the measured thickness is more than 1/2 inch deficient, correct such areas by scarifying, adding new material of proper gradation, reblading, and recompacting as directed. Where the measured thickness is more than 1/2 inch thicker than indicated, the course shall be considered as conforming to the specified thickness requirements. Average job thickness shall be the average of all thickness measurements taken for the job, but shall be within 1/4 inch of the thickness indicated. The total thickness of the base course shall be measured at intervals in such a manner as to ensure one measurement for each 500 square yards of base course. Measurements shall be made in 3 inch diameter test holes penetrating the base course.

3.5.7 Proof Rolling

Proof rolling of the areas indicated shall be in addition to the compaction specified and shall consist of the application of 30 coverages with a heavy pneumatic-tired roller having four or more tires, each loaded to a minimum of 30,000 pounds and inflated to a minimum of 125 psi. In areas designated, apply proof rolling to the top of the underlying material on which the base course is laid and to each layer of base course top of the completed ABC. Maintain water content of the underlying material at optimum or at the percentage directed from start of compaction to completion of proof rolling of that layer. Water content of each layer of the base course shall be maintained at the optimum percentage directed from start of compaction to completion of proof rolling. Any base course materials or any underlying materials that produce unsatisfactory results by proof rolling shall be removed and replaced with satisfactory materials, recompacted and proof rolled to meet these specifications.

3.5.8 Finishing

The surface of the top layer of base course shall be finished after final compaction to grade and cross sections shown. Thin layers of material shall not be added to the top layer of base course to meet grade. If the elevation of the top layer of base course is 1/2 inch or more below grade, then the top layer should be scarified to a depth of at least 3 inches and new material shall be blended in and compacted to bring to grade. Should the surface become rough, corrugated, uneven in texture, or traffic marked prior to completion, the unsatisfactory portion shall be scarified, reworked and recompacted or it shall be replaced as directed.

3.5.9 Smoothness

The surface of the top layer shall show no deviations in excess of 3/8 inch when tested with a 12 foot straightedge. Take measurements in successive positions parallel to the centerline of the area to be paved. Measurements shall also be taken perpendicular to the centerline at 100 foot intervals. Deviations exceeding this amount shall be corrected by removing material and replacing with new material, or by reworking existing material and

CONFORMED

compacting it to meet these specifications.

3.6 TRAFFIC

Completed portions of the base course may be opened to limited traffic, provided there is no marring or distorting of the surface by the traffic. Heavy equipment shall not be permitted except when necessary to construction, and then the area shall be protected against marring or damage to the completed work.

3.7 MAINTENANCE

Maintain the base course in a satisfactory condition until the full pavement section is completed and accepted. Maintenance shall include immediate repairs to any defects and shall be repeated as often as necessary to keep the area intact. Any base course that is not paved over prior to the onset of winter, shall be retested to verify that it still complies with the requirements of this specification. Any area of base course that is damaged shall be reworked or replaced as necessary to comply with this specification.

3.8 DISPOSAL OF UNSATISFACTORY MATERIALS

Dispose of any unsuitable materials that must be removed shall be disposed of as directed. No additional payments will be made for materials that must be replaced.

-- End of Section --

CONFORMED

SECTION 32 31 13

CHAIN LINK FENCES AND GATES
08/10

PART 1 GENERAL

1.1 REFERENCES

The publications listed below form a part of this specification to the extent referenced. The publications are referred to within the text by the basic designation only.

ASTM INTERNATIONAL (ASTM)

ASTM A116	(2011) Standard Specification for Metallic-Coated, Steel Woven Wire Fence Fabric
ASTM A153/A153M	(2009) Standard Specification for Zinc Coating (Hot-Dip) on Iron and Steel Hardware
ASTM A702	(2013) Standard Specification for Steel Fence Posts and Assemblies, Hot Wrought
ASTM A780/A780M	(2009) Standard Practice for Repair of Damaged and Uncoated Areas of Hot-Dip Galvanized Coatings
ASTM A90/A90M	(2013) Standard Test Method for Weight (Mass) of Coating on Iron and Steel Articles with Zinc or Zinc-Alloy Coatings
ASTM C94/C94M	(2015) Standard Specification for Ready-Mixed Concrete
ASTM F1043	(2013) Strength and Protective Coatings on Metal Industrial Chain-Link Fence Framework
ASTM F1083	(2013) Standard Specification for Pipe, Steel, Hot-Dipped Zinc Coated (Galvanized) Welded, for Fence Structures
ASTM F567	(2014) Standard Practice for Installation of Chain Link Fence
ASTM F626	(2014) Standard Specification for Fence Fittings
ASTM F668	(2011) Poly (Vinyl Chloride) (PVC) and other Organic Polymer-Coated Steel Chain-Link Fence Fabric
ASTM F883	(2013) Padlocks

CONFORMED

ASTM F934	(2013) Standard Specification for Standard Colors for Polymer-Coated Chain Link Fence Materials

U.S. GENERAL SERVICES ADMINISTRATION (GSA)

FS RR-F-191/3	(Rev E; Am 1) Fencing, Wire and Post, Metal (Chain-Link Fence Posts, Top Rails and Braces)

1.2 SUBMITTALS

Government approval is required for submittals with a "G" designation; submittals not having a "G" designation are for information only. When used, a designation following the "G" designation identifies the office that will review the submittal for the Government. Submit the following in accordance with Section 01 33 00 SUBMITTAL PROCEDURES:

SD-02 Shop Drawings

Fence Assembly; G

Location of Gate, Corner, End, and Pull Posts; G

Gate Assembly; G

Gate Hardware and Accessories; G

Submit Erection/Installation Drawings for the above items in accordance with paragraph titled "Assembly and Installation Instructions" of this section.

SD-03 Product Data

Fence Assembly; G

Gate Assembly; G

Gate Hardware and Accessories

PVC Coating; G

Zinc Coating; G

Concrete; G

SD-04 Samples

Fabric; G

Braces

Line Posts

Sleeves

Top Rail

CONFORMED

Tension Wire

Stretcher Bars

Gate Posts

Gate Hardware and Accessories

Padlocks

Wire Ties

SD-07 Certificates

Certificates of Compliance

SD-08 Manufacturer's Instructions

Fence Assembly

Gate Assembly

Hardware Assembly

Accessories

1.3 ASSEMBLY AND INSTALLATION INSTRUCTIONS

Submit manufacturer's erection/installation drawings and instructions that detail proper assembly and materials in the design for fence, gate, hardware and accessories.

Submit erection/installation drawings along with manufacturer's catalog data for complete fence assembly, gate assembly, hardware assembly and accessories.

1.4 DELIVERY, STORAGE, AND HANDLING

Deliver materials to site in an undamaged condition. Store materials off the ground to provide protection against oxidation caused by ground contact.

1.5 QUALITY ASSURANCE

1.5.1 Required Report Data

Submit reports of listing of chain-link fencing and accessories regarding weight in ounces for zinc coating and thickness of PVC coating.

1.5.2 Certificates of Compliance

Submit certificates of compliance in accordance with the applicable reference standards and descriptions of this section for the following:

a. Zinc coating

b. PVC coating

CONFORMED

c. Aluminum alloy coating

d. Fabric

e. Stretcher bars

f. Gate hardware and accessories

g. Concrete

PART 2 PRODUCTS

2.1 GENERAL

Provide fencing materials conforming to the requirements of ASTM A116, ASTM A702, ASTM F626, and as specified. Color of all components to match chain link fabric.

2.3 FABRIC

Provide fabric consisting of No. 9-gage wires woven into a 2-inch diamond mesh, with dimensions of fabric and wire conforming to ASTM A116, ASTM A702 and ASTM F626, with 1.20 ounces per square foot zinc galvanizing.

Provide Polymer-Coated fabric per ASTM F668, Class 1 over zinc coated steel wire. Color of fabric shall be black according to ASTM F934.

Provide one-piece fabric widths for fence heights up to 12 feet.

2.4 TOP AND BOTTOM SELVAGES

Provide knuckled selvages at top and bottom for fabric with 2 inch mesh and up to 60 inches high, and if over 60 inches high, provide twisted and barbed top selvage and knuckled bottom selvage.

Knuckle top and bottom selvages for 1-3/4-inch and 1-inch mesh fabric.

2.5 LINE POSTS

Minimum acceptable line posts are as follows:

Up to 6-feet high:

Grade A: 1.900 inch O.D. pipe weighing 2.72 pounds per linear foot.

Grade B: 2.375 inch O.D. pipe weighing 3.12 pounds per linear foot.

Over 6-feet high:

2.0 inch O.D. pipe weighing 3.65 pounds per linear foot.

2.6 END, CORNER, AND PULL POSTS

Provide minimally acceptable end, corner, and pull posts as follows:

CONFORMED

Up to 6 feet high:

Grade A: 2.375 inch O.D. pipe weighing 3.65 pounds per linear foot.

Grade B: 2.375 inch O.D. pipe weighing 3.12 pounds per linear foot.

Over 6 feet high:

Grade A: 2.875 inch O.D. pipe weighing 5.79 pounds per linear foot.

Grade B: 2.875 inch O.D. pipe weighing 4.64 pounds per linear foot.

2.7 SLEEVES

Provide sleeves for setting into concrete construction of the same material as post sections, sized 1-inch greater than the diameter or dimension of the post. Weld flat plates to each sleeve base to provide anchorage and prevent intrusion of concrete.

2.8 TOP RAIL

Provide a minimum of 1.660 inches O.D. pipe rails. Provide expansion couplings 6-inches long at each joint in top rails.

2.9 CENTER RAILS BETWEEN LINE POSTS

For fencing over 6-feet high, provide 1.660 inches O.D. pipe center rails, Grade A weighing 2.27 pounds per linear foot.

2.10 POST-BRACE ASSEMBLY

Provide bracing consisting of 1.660 inches O.D. pipe, Grade A weighing 2.27 pounds per linear foot and 3/8 inch adjustable truss rods and turnbuckles.

2.11 TENSION WIRE

Provide galvanized wire, No. 7-gage, coiled spring wire, provided at the bottom of the fabric only. Provide zinc coating that weighs not less than 1.2 ounces per square foot.

2.12 STRETCHER BARS

Provide bars that have one-piece lengths equal to the full height of the fabric with a minimum cross section of 3/16 by 3/4 inch, in accordance with ASTM A116, ASTM A702 and ASTM F626.

2.13 POST TOPS

Provide tops that are steel, wrought iron, or malleable iron designed as a weathertight closure cap. Provide one cap for each post, unless equal protection is provided by a combination post-cap and barbed-wire supporting arm. Provide caps with an opening to permit through passage of the top rail.

2.14 STRETCHER BAR BANDS

CONFORMED

Provide bar bands for securing stretcher bars to posts that are steel, wrought iron, or malleable iron spaced not over 15 inches on center. Bands may also be used in conjunction with special fittings for securing rails to posts. Provide bands with projecting edges chamfered or eased.

2.15 GATE POSTS

Provide a gate post for supporting each gate leaf as follows:

Up to 6-feet wide:

2.875 inch O.D. pipe Grade A weighing 5.79 pounds per linear foot.

Over 6 feet wide and up to 13 feet wide:

2.875 inch O.D. pipe Grade A weighing 5.79 pounds per linear foot.

2.16 GATES

For gate leaves up to 6-feet high or 6-feet wide, provide perimeter gate frames of 1.66 inch O.D. pipe Grade A weighing 2.27 pounds per linear foot.

For gate leaves over 6 feet high or 6 feet wide, provide perimeter gate frames of 1.90 inch O.D. pipe Grade A weighing 2.72 pounds per linear foot.

Provide gate frame assembly that is welded or assembled with special malleable or pressed-steel fittings and rivets to provide rigid connections. Install fabric with stretcher bars at vertical edges; stretcher bars may also be used at top and bottom edges. Attach stretcher bars and fabric to gate frames on all sides at intervals not exceeding 15 inches. Attach hardware with rivets or by other means which provides equal security against breakage or removal.

Provide diagonal cross-bracing, consisting of 3/8-inch diameter adjustable-length truss rods on welded gate frames, where necessary to obtain frame rigidity without sag or twist. Provide nonwelded gate frames with diagonal bracing.

2.17 GATE HARDWARE AND ACCESSORIES

Provide gate hardware and accessories that conforms to ASTM A116, ASTM A702, ASTM F626, and be as specified:

Provide malleable iron hinges to suit gate size, non-lift-off type, offset to permit 180-degree opening.

Provide latch that permits operation from either side of the gate, with a padlock eye provided as an integral part of the latch.

Provide stops and holders of malleable iron for vehicular gates. Provide stops that automatically engage the gate and hold it in the open position until manually released.

Provide double gates with a cane bolt and ground-set keeper, with latch or locking device and padlock eye designed as an integral part.

CONFORMED

2.18 MISCELLANEOUS HARDWARE

Provide miscellaneous hot-dip galvanized hardware as required.

2.19 WIRE TIES

Provide 16-gage galvanized steel wire for tying fabric to line posts, spaced 12 inches on center. For tying fabric to rails and braces, space wire ties 24 inches on center. For tying fabric to tension wire, space 0.105-inch hog rings 24 inches on center.

Manufacturer's standard procedure will be accepted if of equal strength and durability.

Provide wire ties constructed of the same material as the fencing fabric. Provide accessories with polyvinyl (PVC) coatings similar to that specified for chain-link fabric or framework.

2.20 CONCRETE

Provide concrete conforming to ASTM C94/C94M, and obtaining a minimum 28-day compressive strength of 3,000 psi.

2.21 GROUT

Provide grout of proportions one part portland cement to three parts clean, well-graded sand and a minimum amount of water to produce a workable mix.

2.22 PADLOCKS

Provide padlocks conforming to ASTM F883, with chain.

PART 3 EXECUTION

Provide complete installation conforming to ASTM F567.

3.1 GENERAL

Ensure final grading and established elevations are complete prior to commencing fence installation.

3.2 EXCAVATION

Provide excavations for post footings which are drilled holes in virgin or compacted soil, of minimum sizes as indicated.

Space footings for line posts 10 feet on center maximum and at closer intervals when indicated, with bottoms of the holes approximately 3-inches below the bottoms of the posts. Set bottom of each post not less than 36-inches below finished grade when in firm, undisturbed soil. Set posts deeper, as required, in soft and problem soils and for heavy, lateral loads.

Uniformly spread soil from excavations adjacent to the fence line or on areas of Government property, as directed.

When solid rock is encountered near the surface, drill into the rock at least 12 inches for line posts and at least 18 inches for end, pull, corner,

CONFORMED

and gate posts. Drill holes at least 1 inch greater in diameter than the largest dimension of the placed post.

If solid rock is below the soil overburden, drill to the full depth required except that penetration into rock need not exceed the minimum depths specified above.

3.3 SETTING POSTS

Remove loose and foreign materials from holes and the soil moistened prior to placing concrete.

Provide tops of footings that are trowel finished and sloped or domed to shed water away from posts. Set hold-open devices, sleeves, and other accessories in concrete.

Keep exposed concrete moist for at least 7 calendar days after placement or cured with a membrane curing material, as approved.

Grout all posts set into sleeved holes in concrete with an approved grouting material.

Maintain vertical alignment of posts set in concrete construction until concrete has set.

3.3.1 Earth and Bedrock

Provide concrete bases of dimensions indicated except in bedrock. Compact concrete to eliminate voids, and finish to a dome shape. In bedrock, set posts with a minimum of 1 inch of grout around each post. Work grout into hole to eliminate voids, and finish to a dome shape.

3.3.2 Concrete Slabs and Walls

Set posts into zinc-coated sleeves, set in concrete slab or wall, to a minimum depth of 12 inches. Fill sleeve joint with lead, nonshrink grout, or other approved material. Set posts for support of removable fence sections into sleeves that provide a tight sliding joint and hold posts aligned and plumb without use of lead or setting material.

3.3.3 Bracing

Brace gate, corner, end, and pull posts to nearest post with a horizontal brace used as a compression member, placed at least 12 inches below top of fence, and a diagonal tension rod.

3.4 CONCRETE STRENGTH

Provide concrete that has attained at least 75 percent of its minimum 28-day compressive strength, but in no case sooner than 7 calendar days after placement, before rails, tension wire, or fabric are installed. Do not stretch fabric and wires or hang gates until the concrete has attained its full design strength.

Take samples and test concrete to determine strength as specified.

CONFORMED

3.5 TOP RAILS

Provide top rails that run continuously through post caps or extension arms, bending to radius for curved runs. Provide expansion couplings as recommended by the fencing manufacturer.

3.6 BRACE ASSEMBLY

Provide bracing assemblies at end and gate posts and at both sides of corner and pull posts, with the horizontal brace located at midheight of the fabric.

Install brace assemblies so posts are plumb when the diagonal rod is under proper tension.

Provide two complete brace assemblies at corner and pull posts where required for stiffness and as indicated.

3.7 TENSION WIRE INSTALLATION

Install tension wire by weaving them through the fabric and tying them to each post with not less than 7-gage galvanized wire or by securing the wire to the fabric with 10-gage ties or clips spaced 24 inches on center.

3.8 FABRIC INSTALLATION

Provide fabric in single lengths between stretch bars with bottom barbs placed approximately 1-1/2-inches above the ground line. Pull fabric taut and tied to posts, rails, and tension wire with wire ties and bands.

Install fabric on the security side of fence, unless otherwise directed.

Ensure fabric remains under tension after the pulling force is released.

3.9 STRETCHER BAR INSTALLATION

Thread stretcher bars through or clamped to fabric 4 inches on center and secured to posts with metal bands spaced 15 inches on center.

3.10 GATE INSTALLATION

Install gates plumb, level, and secure, with full opening without interference. Install ground set items in concrete for anchorage as recommended by the fence manufacturer. Adjust hardware for smooth operation and lubricated where necessary.

3.11 TIE WIRES

Provide tie wires that are U-shaped to the pipe diameters to which attached. Twist ends of tie wires not less than two full turns and bent so as not to present a hazard.

3.12 FASTENERS

Install nuts for tension bands and hardware on the side of the fence opposite the fabric side. Peen ends of bolts to prevent removal of nuts.

CONFORMED

3.13 ZINC-COATING REPAIR

Clean and repair galvanized surfaces damaged by welding or abrasion, and cut ends of fabric, or other cut sections with specified galvanizing repair material applied in strict conformance with the manufacturer's printed instructions.

3.14 TOLERANCES

Provide posts that are straight and plumb within a vertical tolerance of 1/4 inch after the fabric has been stretched. Provide fencing and gates that are true to line with no more than 1/2 inch deviation from the established centerline between line posts. Repair defects as directed.

3.15 SITE PREPARATION

3.15.1 Clearing and Grading

Clear fence line of trees, brush, and other obstacles to install fencing. Establish a graded, compacted fence line prior to fencing installation.

3.16 FENCE INSTALLATION

Install fence on prepared surfaces to line and grade indicated. Install fence in accordance with fence manufacturer's written installation instructions except as modified herein.

3.16.1 Post Spacing

Provide line posts spaced equidistantly apart, not exceeding 10 feet on center. Provide gate posts spaced as necessary for size of gate openings. Do not exceed 500 feet on straight runs between braced posts. Provide corner or pull posts, with bracing in both directions, for changes in direction of 15 degrees or more, or for abrupt changes in grade. Provide drawings showing location of gate, corner, end, and pull posts.

3.16.2 Top and Bottom Tension Wire

Install top and bottom tension wires before installing chain-link fabric, and pull wires taut. Place top and bottom tension wires within 8 inches of respective fabric line.

3.17 ACCESSORIES INSTALLATION

3.17.1 Post Caps

Install post caps as recommended by the manufacturer.

3.17.2 Padlocks

Provide padlocks for gate openings and provide chains that are securely attached to gate or gate posts. Provide padlocks keyed alike, and provide two keys for each padlock.

3.18 CLEANUP

Remove waste fencing materials and other debris from the work site.

CONFORMED

-- End of Section --

CONFORMED

SECTION TABLE OF CONTENTS

DIVISION 32 - EXTERIOR IMPROVEMENTS

SECTION 32 92 19

SEEDING

10/06

PART 1 GENERAL

1.1 REFERENCES
1.2 DEFINITIONS
1.2.1 Stand of Turf
1.3 RELATED REQUIREMENTS
1.4 SUBMITTALS
1.5 DELIVERY, STORAGE, AND HANDLING
1.5.1 Delivery
1.5.1.1 Seed Protection
1.5.1.2 Fertilizer, Gypsum, Sulfur, Iron and Lime Delivery
1.5.2 Storage
1.5.2.1 Seed, Fertilizer, Gypsum, Sulfur, Iron and Lime Storage
1.5.2.2 Handling
1.6 TIME RESTRICTIONS AND PLANTING CONDITIONS
1.6.1 Restrictions
1.7 TIME LIMITATIONS
1.7.1 Seed

PART 2 PRODUCTS

2.1 SEED
2.1.1 Classification
2.1.2 Planting Dates
2.1.3 Seed Purity - Upland Seed Mix
2.1.4 Seed Purity - Wetland Seed Mix
2.1.5 Seed Mixture by Weight - Upland Seed Mix
2.1.6 Seed Mixture by Weight - Wetland Seed Mix
2.2 FERTILIZER
2.2.1 Hydroseeding Fertilizer
2.3 MULCH
2.3.1 Straw
2.3.2 Hay
2.3.3 Wood Cellulose Fiber Mulch
2.4 WATER
2.5 EROSION CONTROL MATERIALS

PART 3 EXECUTION

3.1 PREPARATION
3.1.1 EXTENT OF WORK
3.1.1.1 Soil Conditioner Application Rates
3.1.1.2 Fertilizer Application Rates
3.2 SEEDING
3.2.1 Seed Application Seasons and Conditions
3.2.2 Seed Application Method

CONFORMED

3.2.2.1 Hydroseeding Wetland Area
3.2.3 Hydroseeding Upland Area
3.2.4 Mulching
3.2.4.1 Hay or Straw Mulch
3.2.4.2 Mechanical Anchor
3.2.4.3 Asphalt Adhesive Tackifier
3.2.4.4 Non-Asphaltic Tackifier
3.2.4.5 Asphalt Adhesive Coated Mulch
3.2.5 Erosion Control Material
3.2.6 Watering
3.3 PROTECTION OF TURF AREAS
3.4 RESTORATION

-- End of Section Table of Contents --

CONFORMED

SECTION 32 92 19

SEEDING
10/06

PART 1 GENERAL

1.1 REFERENCES

The publications listed below form a part of this specification to the extent referenced. The publications are referred to within the text by the basic designation only.

U.S. DEPARTMENT OF AGRICULTURE (USDA)

AMS Seed Act (1940; R 1988; R 1998) Federal Seed Act

1.2 DEFINITIONS

1.2.1 Stand of Turf

95 percent ground cover of the established species.

1.3 RELATED REQUIREMENTS

Section 31 00 00 EARTHWORK applies to this section for pesticide use and plant establishment requirements, with additions and modifications herein.

1.4 SUBMITTALS

Government approval is required for submittals with a "G" designation; submittals not having a "G" designation are for information only. When used, a designation following the "G" designation identifies the office that will review the submittal for the Government. Submit the following in accordance with Section 01 33 00 SUBMITTAL PROCEDURES:

SD-03 Product Data

Wood cellulose fiber mulch

Fertilizer

Include physical characteristics, and recommendations.

SD-07 Certificates

State certification and approval for seed

SD-08 Manufacturer's Instructions

Erosion Control Materials

CONFORMED

1.5 DELIVERY, STORAGE, AND HANDLING

1.5.1 Delivery

1.5.1.1 Seed Protection

Protect from drying out and from contamination during delivery, on-site storage, and handling.

1.5.1.2 Fertilizer, Gypsum, Sulfur, Iron and Lime Delivery

Deliver to the site in original, unopened containers bearing manufacturer's chemical analysis, name, trade name, trademark, and indication of conformance to state and federal laws. Instead of containers, fertilizer, gypsum, sulphur, iron and lime may be furnished in bulk with certificate indicating the above information.

1.5.2 Storage

1.5.2.1 Seed, Fertilizer, Gypsum, Sulfur, Iron and Lime Storage

Store in cool, dry locations away from contaminants.

1.5.2.2 Handling

Do not drop or dump materials from vehicles.

1.6 TIME RESTRICTIONS AND PLANTING CONDITIONS

1.6.1 Restrictions

Do not plant when the ground is frozen, snow covered, muddy, or when air temperature exceeds 90 degrees Fahrenheit.

1.7 TIME LIMITATIONS

1.7.1 Seed

Apply seed within twenty four hours after seed bed preparation.

PART 2 PRODUCTS

2.1 SEED

2.1.1 Classification

Provide State-certified seed of the latest season's crop delivered in original sealed packages, bearing producer's guaranteed analysis for percentages of mixtures, purity, germination, weed seed content, and inert material. Label in conformance with AMS Seed Act and applicable state seed laws. Wet, moldy, or otherwise damaged seed will be rejected. Field mixes will be acceptable when field mix is performed on site in the presence of the Contracting Officer.

CONFORMED

2.1.2 Planting Dates

Planting Season	Planting Dates
Season 1	October 1 - November 1

2.1.3 Seed Purity - Upland Seed Mix

Botanical Name	Common Name	Minimum Percent Pure Seed	Minimum Percent Germination and Hard Seed	Maximum Percent Weed Seed
Bromus carinatus 'S.F. Bay Area'	California brome	95	85	1
Elymus glaucus	Blue wild rye	95	85	1
Hordeum brachyantherum ssp. californicum	Prostrate California barley	90	80	1
Vulpia microstachys	Six weeks fescue	90	70	1

2.1.4 Seed Purity - Wetland Seed Mix

Botanical Name	Common Name	Minimum Percent Pure Seed	Minimum Percent Germination and Hard Seed	Maximum Percent Weed Seed
Artemisia douglasiana	Mugwort	10	50	1
Cyperus eragrostis	Flatsedge	90	80	1
Elymus glaucus	Blue wild rye	95	85	1
Hordeum brachyantherum	Meadow barley	90	80	1

2.1.5 Seed Mixture by Weight - Upland Seed Mix

Botanical Name	Common Name	Weight (Pure Live Seed Lbs/Acre)
Bromus carinatus 'S.F. Bay Area'	California brome	10
Elymus glaucus	Blue wild rye	12
Hordeum brachyantherum ssp. californicum	Prostrate California barley	16
Vulpia microstachys	Six weeks fescue	5

CONFORMED

2.1.6 Seed Mixture by Weight - Wetland Seed Mix

Botanical Name	Common Name	Weight (Pure Live Seed Lbs/Acre)
Artemisia douglasiana	Mugwort	0.25
Cyperus eragrostis	Flatsedge	2.75
Elymus glaucus	Blue wild rye	24
Hordeum brachyantherum	Meadow barley	8

2.2 FERTILIZER

2.2.1 Hydroseeding Fertilizer

Controlled release fertilizer, to use with hydroseeding and composed of pills coated with plastic resin to provide a continuous release of nutrients for at least 6 months and containing the following minimum percentages, by weight, of plant food nutrients.

10 percent available nitrogen
20 percent available phosphorus
10 percent available potassium

2.3 MULCH

Mulch shall be free from noxious weeds, mold, and other deleterious materials.

2.3.1 Straw

Stalks from oats, wheat, rye, barley, or rice. Furnish in air-dry condition and of proper consistency for placing with commercial mulch blowing equipment. Straw shall contain no fertile seed.

2.3.2 Hay

Air-dry condition and of proper consistency for placing with commercial mulch blowing equipment. Hay shall be sterile, containing no fertile seed.

2.3.3 Wood Cellulose Fiber Mulch

Use recovered materials of either paper-based (100 percent) or wood-based (100 percent) hydraulic mulch. Processed to contain no growth or germination-inhibiting factors and dyed an appropriate color to facilitate visual metering of materials application. Shall be free of salt, foreign materials, and other harmful substances. Wood cellulose mulch shall not be produced from tree trimmings that contain leaves, seeds, inflorescences, or small twigs. Composition on air-dry weight basis: 9 to 15 percent moisture, pH range from 5.5 to 8.2. Use with hydraulic application of grass seed and fertilizer.

2.4 WATER

Source of water shall be approved by Contracting Officer and of suitable quality for irrigation, containing no elements toxic to plant life.

CONFORMED

2.5 EROSION CONTROL MATERIALS

Erosion control material shall conform to the requirements of Section 31 32 11 SOIL SURFACE EROSION CONTROL.

PART 3 EXECUTION

3.1 PREPARATION

3.1.1 EXTENT OF WORK

Provide fertilizing, seeding, and surface topdressing of all newly graded finished earth surfaces, unless indicated otherwise, and at all areas inside or outside the limits of construction that are disturbed by the Contractor's operations.

3.1.1.1 Soil Conditioner Application Rates

Apply soil conditioners at rates as determined by laboratory soil analysis of the soils at the job site.

3.1.1.2 Fertilizer Application Rates

Apply fertilizer at rates as determined by laboratory soil analysis of the soils at the job site. For bidding purposes only apply at rates for the following:

Hydroseeding Fertilizer 500 pounds per acre.

3.2 SEEDING

3.2.1 Seed Application Seasons and Conditions

Immediately before seeding, restore soil to proper grade. Do not seed when ground is muddy or frozen or in an unsatisfactory condition for seeding. If special conditions exist that may warrant a variance in the above seeding dates or conditions, submit a written request to the Contracting Officer stating the special conditions and proposed variance. Apply seed within twenty four hours after seedbed preparation. Sow seed by approved sowing equipment. Sow one-half the seed in one direction, and sow remainder at right angles to the first sowing.

3.2.2 Seed Application Method

Seeding method shall be hydroseeding.

3.2.2.1 Hydroseeding Wetland Area

First, mix water and fiber. Wood cellulose fiber, paper fiber, or recycled paper shall be applied as part of the hydroseeding operation. Fiber shall be added at 1,000 pounds, dry weight, per acre. Then add and mix seed and fertilizer to produce a homogeneous slurry. Seed shall be mixed to ensure broadcasting at the rate of 35 pounds per acre. When hydraulically sprayed on the ground, material shall form a blotter like cover impregnated uniformly with grass seed. Spread with one application with no second application of mulch.

CONFORMED

3.2.3 Hydroseeding Upland Area

First, mix water and fiber. Wood cellulose fiber, paper fiber, or recycled paper shall be applied as part of the hydroseeding operation. Fiber shall be added at 1,000 pounds, dry weight, per acre. Then add and mix seed and fertilizer to produce a homogeneous slurry. Seed shall be mixed to ensure broadcasting at the rate of 43 pounds per acre. When hydraulically sprayed on the ground, material shall form a blotter like cover impregnated uniformly with grass seed. Spread with one application with no second application of mulch.

3.2.4 Mulching

3.2.4.1 Hay or Straw Mulch

Hay or straw mulch shall be spread uniformly at the rate of 2 tons per acre. Mulch shall be spread by hand, blower-type mulch spreader, or other approved method. Mulching shall be started on the windward side of relatively flat areas or on the upper part of steep slopes, and continued uniformly until the area is covered. The mulch shall not be bunched or clumped. Sunlight shall not be completely excluded from penetrating to the ground surface. All areas installed with seed shall be mulched on the same day as the seeding. Mulch shall be anchored immediately following spreading.

3.2.4.2 Mechanical Anchor

Mechanical anchor shall be a V-type-wheel land packer; a scalloped-disk land packer designed to force mulch into the soil surface; or other suitable equipment.

3.2.4.3 Asphalt Adhesive Tackifier

Asphalt adhesive tackifier shall be sprayed at a rate between 10 to 13 gallons per 1000 square feet. Sunlight shall not be completely excluded from penetrating to the ground surface.

3.2.4.4 Non-Asphaltic Tackifier

Hydrophilic colloid shall be applied at the rate recommended by the manufacturer, using hydraulic equipment suitable for thoroughly mixing with water. A uniform mixture shall be applied over the area.

3.2.4.5 Asphalt Adhesive Coated Mulch

Hay or straw mulch may be spread simultaneously with asphalt adhesive applied at a rate between 10 to 13 gallons per 1000 square feet, using power mulch equipment which shall be equipped with suitable asphalt pump and nozzle. The adhesive-coated mulch shall be applied evenly over the surface. Sunlight shall not be completely excluded from penetrating to the ground surface.

3.2.5 Erosion Control Material

Install in accordance with manufacturer's instructions, where indicated or as directed by the Contracting Officer.

CONFORMED

3.2.6 Watering

Start watering areas seeded as required by temperature and wind conditions. Apply water at a rate sufficient to insure thorough wetting of soil to a depth of 2 inches without run off. During the germination process, seed is to be kept actively growing and not allowed to dry out.

3.3 PROTECTION OF TURF AREAS

Immediately after turfing, protect area against traffic and other use.

3.4 RESTORATION

Restore to original condition existing turf areas which have been damaged during turf installation operations at the Contractor's expense. Clean other paving when work in adjacent areas is complete.

-- End of Section --

CONFORMED

SECTION 33 40 00

STORM DRAINAGE UTILITIES
02/10

PART 1 GENERAL

1.1 REFERENCES

The publications listed below form a part of this specification to the extent referenced. The publications are referred to within the text by the basic designation only.

AMERICAN ASSOCIATION OF STATE HIGHWAY AND TRANSPORTATION OFFICIALS (AASHTO)

AASHTO M 294	(2013) Standard Specification for Corrugated Polyethylene Pipe, 300- to 1500-mm Diameter

ASTM INTERNATIONAL (ASTM)

ASTM A123/A123M	(2013) Standard Specification for Zinc (Hot-Dip Galvanized) Coatings on Iron and Steel Products
ASTM A48/A48M	(2003; R 2012) Standard Specification for Gray Iron Castings
ASTM A536	(1984; R 2014) Standard Specification for Ductile Iron Castings
ASTM A929/A929M	(2001; R 2013) Standard Specification for Steel Sheet, Metallic-Coated by the Hot-Dip Process for Corrugated Steel Pipe
ASTM B26/B26M	(2012) Standard Specification for Aluminum-Alloy Sand Castings
ASTM C139	(2011) Standard Specification for Concrete Masonry Units for Construction of Catch Basins and Manholes
ASTM C231/C231M	(2014) Standard Test Method for Air Content of Freshly Mixed Concrete by the Pressure Method
ASTM C270	(2014) Standard Specification for Mortar for Unit Masonry
ASTM C425	(2004; R 2013) Standard Specification for Compression Joints for Vitrified Clay Pipe and Fittings

CONFORMED

ASTM C443	(2011) Standard Specification for Joints for Concrete Pipe and Manholes, Using Rubber Gaskets
ASTM C76	(2014) Standard Specification for Reinforced Concrete Culvert, Storm Drain, and Sewer Pipe
ASTM C877	(2008) External Sealing Bands for Concrete Pipe, Manholes, and Precast Box Sections
ASTM C923	(2008; R 2013) Standard Specification for Resilient Connectors Between Reinforced Concrete Manhole Structures, Pipes and Laterals
ASTM C990	(2009; R 2014) Standard Specification for Joints for Concrete Pipe, Manholes and Precast Box Sections Using Preformed Flexible Joint Sealants
ASTM D1557	(2012) Standard Test Methods for Laboratory Compaction Characteristics of Soil Using Modified Effort (56,000 ft-lbf/ft3) (2700 kN-m/m3)
ASTM D1751	(2004; E 2013; R 2013) Standard Specification for Preformed Expansion Joint Filler for Concrete Paving and Structural Construction (Nonextruding and Resilient Bituminous Types)
ASTM D1752	(2004a; R 2013) Standard Specification for Preformed Sponge Rubber Cork and Recycled PVC Expansion
ASTM D2167	(2008) Density and Unit Weight of Soil in Place by the Rubber Balloon Method
ASTM D2321	(2014; E 2014) Standard Practice for Underground Installation of Thermoplastic Pipe for Sewers and Other Gravity-Flow Applications
ASTM D3350	(2012) Polyethylene Plastics Pipe and Fittings Materials
ASTM D6938	(2010) Standard Test Method for In-Place Density and Water Content of Soil and Soil-Aggregate by Nuclear Methods (Shallow Depth)
ASTM F477	(2010) Standard Specification for Elastomeric Seals (Gaskets) for Joining Plastic Pipe
ASTM F714	(2013) Polyethylene (PE) Plastic Pipe (SDR-PR) Based on Outside Diameter
ASTM F894	(2013) Polyethylene (PE) Large Diameter Profile Wall Sewer and Drain Pipe

CONFORMED

1.2 SUBMITTALS

Government approval is required for submittals with a "G" designation; submittals not having a "G" designation are for information only. When used, a designation following the "G" designation identifies the office that will review the submittal for the Government. Submit the following in accordance with Section 01 33 00 SUBMITTAL PROCEDURES:

SD-03 Product Data

Placing Pipe

Submit printed copies of the manufacturer's recommendations for installation procedures of the material being placed, prior to installation.

Flpa Gate Check Valves; G

Submit printed copies of the product literature at the time of bidding that includes information on the valve dimensions, installation orientation, U.S. certification, verification of independent laboratory testing for head loss and velocity tests, verification of backpressure capacity, verification of consistency of duckbill check valves of the same size and construction, verification of finite Element Analysis, hydraulic Curve for each size valve showing head loss versus flow, operating point and backpressure capacity, and installation, Operation and Maintenance Manual.

SD-04 Samples

Pipe for Culverts and Storm Drains

SD-07 Certificates

Resin Certification
Determination of Density
Frame and Cover for Gratings

1.3 DELIVERY, STORAGE, AND HANDLING

1.3.1 Delivery and Storage

Materials delivered to site shall be inspected for damage, unloaded, and stored with a minimum of handling. Materials shall not be stored directly on the ground. The inside of pipes and fittings shall be kept free of dirt and debris. Before, during, and after installation, plastic pipe and fittings shall be protected from any environment that would result in damage or deterioration to the material. Keep a copy of the manufacturer's instructions available at the construction site at all times and follow these instructions unless directed otherwise by the Contracting Officer. Solvents, solvent compounds, lubricants, elastomeric gaskets, and any similar materials required to install plastic pipe shall be stored in accordance with the manufacturer's recommendations and shall be discarded if the storage period exceeds the recommended shelf life. Solvents in use shall be discarded when the recommended pot life is exceeded.

CONFORMED

1.3.2 Handling

Materials shall be handled in a manner that ensures delivery to the trench in sound, undamaged condition. Pipe shall be carried to the trench, not dragged.

1.4 FLAP GATE CHECK VALVES

The flap gate check valves shall be elastomeric duckbill type constructed of fabric reinforced elastomer. The valve shall be installed onto concrete headwall at the end of the pipe outlet. The valve shall allow forward flow through the the valve. When forward flow is discontinued the valve shall prevent backflow by sealing closed when hydrostatic pressure is applied to the exterior of the valve. The valve shall be capable of withstanding the specified backpressure capacity without any leakage through the valve.

The valve shall include a supplemental closure mechanism to maintain closure of the bill opening during zero flow and zero hydrostatic load. This mechanism shall be an integral part of the valve and be comprised of a permanently set curvature of the bill portion extending over the entire length of the bill opening. Valves not constructed of sufficient sidewall rigidity and supplemental closure mechanism to achieve this closure requirement shall not be accepted.

The valve shall be configured as an eccentric type where the bottom of the valve is flat and the top is flared vertically to provide the specified bill opening to diameter ratio dimension. The valve bill opening shall be aligned exactly vertical when installed to maintain symmetrically equal loads on each side of the valve under static and dynamic operation. Valves not constructed eccentrically or requiring rotation of the bill opening from the vertical for installation shall not be accepted.

Elastomeric flap gate check valves can be fabricated for various rigidities, backpressure capacities and head loss characteristics; it is the intent of these specifications to define the operational parameters and performance requirements of the valves and that the valves are fabricated in accordance with these specifications. Submittals containing generic valve constructions with head loss characteristics outside the required operating range and/or without representative head loss data shall not be accepted.

The valve manufacturer shall have a minimum of fifteen years experience in fabrication and installations within the United States of America for valves of the same size as required within these specifications. The manufacturer shall provide certification that the valves provided for this project were in their entirety fabricated, vulcanized and packaged within the United States of America and completely American made.

Manufacturer shall have conducted independent hydraulic testing to determine head loss and jet velocity characteristics on a representative set of duckbill valves. The testing must include multiple constructions (stiffness) within each size designated by backpressure rating and must have been conducted for free discharge (discharge to atmosphere) and submerged conditions.

Manufacturer to have conducted Finite Element Analysis (FEA) on representative duckbill valve sizes to determine deflection, stress and

CONFORMED

strain characteristics under various load conditions. Modeling must have been done for flowing conditions (positive differential pressure) and reverse differential pressure.

PART 2 PRODUCTS

2.1 PIPE FOR CULVERTS AND STORM DRAINS

Pipe for culverts and storm drains shall be of the sizes and classes indicated and shall conform to the requirements specified.

2.1.1 Concrete Pipe

Manufactured in accordance with and conforming to ASTM C76, Class III.

2.1.2 Polyethylene (PE) Pipe

Submit the pipe manufacturer's resin certification, indicating the cell classification of PE used to manufacture the pipe, prior to installation of the pipe. The minimum cell classification for polyethylene plastic shall apply to each of the seven primary properties of the cell classification limits in accordance with ASTM D3350.

2.1.2.1 Smooth Wall PE Pipe

ASTM F714, maximum DR of 21 for pipes 3 to 24 inches in diameter and maximum DR of 26 for pipes 26 to 48 inches in diameter. Pipe shall be produced from PE certified by the resin producer as meeting the requirements of ASTM D3350, minimum cell class 335434C.

2.1.2.2 Corrugated PE Pipe

AASHTO M 294, Type S. For slow crack growth resistance, acceptance of resins shall be determined by using the notched constant ligament-stress (NCLS) test meeting the requirements of AASHTO M 294. Pipe walls shall have the following properties:

Nominal Size (inch))	Minimum Wall Area (square in/ft)	Minimum Moment of Inertia of Wall Section (in. to the 4th/in.)
12	1.5	0.024
15	1.91	0.053
18	2.34	0.062
24	3.14	0.116
30	3.92	0.163
36	4.50	0.222
42	4.69	0.543

CONFORMED

Nominal Size (inch))	Minimum Wall Area (square in/ft)	Minimum Moment of Inertia of Wall Section (in. to the 4th/in.)
48	5.15	0.543
54	5.67	0.800
60	6.45	0.800

2.1.2.3 Profile Wall PE Pipe

ASTM F894, RSC 160, produced from PE certified by the resin producer as meeting the requirements of ASTM D3350, minimum cell class 334433C. Pipe walls shall have the following properties:

Nominal Size (inch)	Minimum Wall Area (square in/ft)	Minimum Moment of Inertia of Wall Section (in to the 4th/in)	
		Cell Class 334433C	Cell Class 335434C
18	2.96	0.052	0.038
21	4.15	0.070	0.051
24	4.66	0.081	0.059
27	5.91	0.125	0.091
30	5.91	0.125	0.091
33	6.99	0.161	0.132
36	7.81	0.202	0.165
42	8.08	0.277	0.227
48	8.82	0.338	0.277

2.2 DRAINAGE STRUCTURES

2.2.1 Flared End Sections

Sections shall be of a standard design fabricated from zinc coated steel sheets meeting requirements of ASTM A929/A929M.

2.3 MISCELLANEOUS MATERIALS

2.3.1 Concrete

CONFORMED

Unless otherwise specified, concrete and reinforced concrete shall conform to the requirements for 3,000 psi concrete under Section 03 31 01.00 10 CAST-IN-PLACE STRUCTURAL CONCRETE FOR CIVIL WORKS\\tts318fs1.tt.local\SWG\Projects\WATR\SPECSINTACT\JOBS\T31331\prntdata\Word\.doc. The concrete mixture shall have air content by volume of concrete, based on measurements made immediately after discharge from the mixer, of 5 to 7 percent when maximum size of coarse aggregate exceeds 1-1/2 inches. Air content shall be determined in accordance with ASTM C231/C231M. The concrete covering over steel reinforcing shall not be less than 1 inch thick for covers and not less than 1-1/2 inches thick for walls and flooring. Concrete covering deposited directly against the ground shall have a thickness of at least 3 inches between steel and ground. Expansion-joint filler material shall conform to ASTM D1751, or ASTM D1752, or shall be resin-impregnated fiberboard conforming to the physical requirements of ASTM D1752.

2.3.2 Mortar

Mortar for pipe joints, connections to other drainage structures, and brick or block construction shall conform to ASTM C270, Type M, except that the maximum placement time shall be 1 hour. The quantity of water in the mixture shall be sufficient to produce a stiff workable mortar. Water shall be clean and free of harmful acids, alkalis, and organic impurities. The mortar shall be used within 30 minutes after the ingredients are mixed with water. The inside of the joint shall be wiped clean and finished smooth. The mortar head on the outside shall be protected from air and sun with a proper covering until satisfactorily cured.

2.3.3 Precast Concrete Segmental Blocks

Precast concrete segmental block shall conform to ASTM C139, not more than 8 inches thick, not less than 8 inches long, and of such shape that joints can be sealed effectively and bonded with cement mortar.

2.3.4 Frame and Cover for Gratings

Submit certification on the ability of frame and cover or gratings to carry the imposed live load. Frame and cover for gratings shall be cast gray iron, ASTM A48/A48M, Class 35B; cast ductile iron, ASTM A536, Grade 65-45-12; or cast aluminum, ASTM B26/B26M, Alloy 356.OT6. Weight, shape, size, and waterway openings for grates and curb inlets shall be as indicated on the plans.

2.3.5 Joints

2.3.5.1 Flexible Watertight Joints

a. Materials: Flexible watertight joints shall be made with plastic or rubber-type gaskets for concrete pipe. The design of joints and the physical requirements for preformed flexible joint sealants shall conform to ASTM C990, and rubber-type gaskets shall conform to ASTM C443. Factory-fabricated resilient joint materials shall conform to ASTM C425. Gaskets shall have not more than one factory-fabricated splice, except that two factory-fabricated splices of the rubber-type gasket are permitted if the nominal diameter of the pipe being gasketed exceeds 54 inches.

CONFORMED

b. Test Requirements: Watertight joints shall be tested and shall meet test requirements of paragraph HYDROSTATIC TEST ON WATERTIGHT JOINTS. Rubber gaskets shall comply with the oil resistant gasket requirements of ASTM C443. Certified copies of test results shall be delivered to the Contracting Officer before gaskets or jointing materials are installed. Alternate types of watertight joint may be furnished, if specifically approved.

2.3.5.2 External Sealing Bands

Requirements for external sealing bands shall conform to ASTM C877.

2.3.5.3 Flexible Watertight, Gasketed Joints

a. Gaskets: When infiltration or exfiltration is a concern for pipe lines, the couplings may be required to have gaskets. Rubber O-ring gaskets shall be 13/16 inch in diameter for pipe diameters of 36 inches or smaller and 7/8 inch in diameter for larger pipe having 1/2 inch deep end corrugation. Rubber O-ring gaskets shall be 1-3/8 inches in diameter for pipe having 1 inch deep end corrugations. O-rings shall meet the requirements of ASTM C990 or ASTM C443. Preformed flexible joint sealants shall conform to ASTM C990, Type B.

2.3.5.4 Smooth Wall PE Plastic Pipe

Pipe shall be joined using butt fusion method as recommended by the pipe manufacturer.

2.3.5.5 Corrugated PE Plastic Pipe

Pipe joints shall be water tight and shall conform to the requirements in AASHTO M 294. Water tight joints shall be made using a PE coupling and rubber gaskets as recommended by the pipe manufacturer. Rubber gaskets shall conform to ASTM F477.

2.3.5.6 Profile Wall PE Plastic Pipe

Joints shall be gasketed or thermal weld type with integral bell in accordance with ASTM F894.

2.4 STEEL LADDER

Steel ladder shall be provided where the depth of the storm drainage structure exceeds 12 feet. These ladders shall be not less than 16 inches in width, with 3/4 inch diameter rungs spaced 12 inches apart. The two stringers shall be a minimum 3/8 inch thick and 2-1/2 inches wide. Ladders and inserts shall be galvanized after fabrication in conformance with ASTM A123/A123M.

2.5 RESILIENT CONNECTORS

Flexible, watertight connectors used for connecting pipe to manholes and inlets shall conform to ASTM C923.

2.6 FLAP GATE CHECK VALVES

CONFORMED

The valve shall be a one piece elastomer construction with internal fabric reinforcing all vulcanized into a composite material. The valve shall be equipped with an elastomeric flange as an integral part of the valve. The amount and configuration of the internal reinforcing shall be sufficient to maintain structural integrity of the valve. The reinforcing shall extend into the flanged area to provide uniform strength across the entire valve exterior.

The flange drilling shall conform to ANSI B16.1 Class 125/ANSI B16.5 Class 150 standards. The valve shall be furnished with one set of galvanized/stainless steel/thermoplastic backing rings conforming to the same ANSI flange drilling standards.

The valve shall be eccentric type with the valve bottom horizontal and flat across the entire length of the valve and the top portion of the valve angled from the pipe insertion point into the cuff to the top of the bill opening of the valve. The valve shall be dimensionally constructed for installation onto the pipe and the bill opening being vertically aligned to maintain symmetrically equal loading on each side of the valve. Rotating the valve out of vertical alignment to avoid peripheral interferences shall not be allowed.

The bill opening at the valve must be at least 1.57 times the nominal pipe diameter to maintain laminar flow through the valve. Valves submitted with a bill opening below this ratio and/or utilizing expanded cuff adapters will not be accepted. The bill portion of the valve shall be curved at a minimum of 90 degrees from the direction of flow. The curvature shall be permanently set through vulcanization and shall be an integral part of the valve body. This curvature shall provide closure of the bill opening under static conditions as well as dynamic backpressure conditions during periods of zero flow.

The valve manufacturer's name, manufactured location, model number and serial number shall be bonded onto the exterior of the valve. A lifting clevis shall be installed at the bill end of the flpa gate check valve constructed of 304L stainless steel loop and hardware for valve sizes 36" and greater.

The elastomer check valves shall be placed on a pallet with the cuff portion seated flush against the surface of the pallet and the bill portion facing upward; shipping the valve on its side in any manner will not be accepted. The manufacturer shall provide supplemental supports and bracing to the interior and/or exterior to maintain the shape and form of the valve through the packaging and shipping process. The valve shall be adequately strapped to the pallet to prevent movement while handling and moving the entire pallet assembly; strapping shall not cause deflection or deformation of the valve. The valve shall be externally covered in clear plastic static wrap prior to leaving the manufacturing facility.

The elastomer check valves shall be stored in a cool, dry location and remained packaged on the shipping pallets for storage periods prior to installation. Do not remove any bracing or shipping rings until the valve is to be installed. During the storage period, avoid exposure to UV light, corrosive chemicals, and concentrated noxious gases (i.e. Ozone). Refer to the manufacturer's Installation, Operation and Maintenance Manual for handling procedures of the valve during installation and proper use of lifting clevis and clamp rings.

CONFORMED

PART 3 EXECUTION

3.1 EXCAVATION FOR PIPE CULVERTS, STORM DRAINS, AND DRAINAGE STRUCTURES

Excavation of trenches, and for appurtenances and backfilling for culverts and storm drains, shall be in accordance with the applicable portions of Section 31 00 00 EARTHWORK and the requirements specified below.

3.1.1 Trenching

The width of trenches at any point below the top of the pipe shall be not greater than the outside diameter of the pipe plus 12 inches to permit satisfactory jointing and thorough tamping of the bedding material under and around the pipe. Sheeting and bracing, where required, shall be placed within the trench width as specified, without any overexcavation. Where trench widths are exceeded, redesign with a resultant increase in cost of stronger pipe or special installation procedures will be necessary. Cost of this redesign and increased cost of pipe or installation shall be borne by the Contractor without additional cost to the Government.

3.1.2 Removal of Rock

Rock in either ledge or boulder formation shall be replaced with suitable materials to provide a compacted earth cushion having a thickness between unremoved rock and the pipe of at least 8 inches or 1/2 inch for each foot of fill over the top of the pipe, whichever is greater, but not more than three-fourths the nominal diameter of the pipe. Where bell-and-spigot pipe is used, the cushion shall be maintained under the bell as well as under the straight portion of the pipe. Rock excavation shall be as specified and defined in Section 31 00 00 EARTHWORK.

3.1.3 Removal of Unstable Material

Where wet or otherwise unstable soil incapable of properly supporting the pipe, as determined by the Contracting Officer, is unexpectedly encountered in the bottom of a trench, such material shall be removed to the depth required and replaced to the proper grade with select granular material, compacted as provided in paragraph BACKFILLING. When removal of unstable material is due to the fault or neglect of the Contractor while performing shoring and sheeting, water removal, or other specified requirements, such removal and replacement shall be performed at no additional cost to the Government.

3.2 BEDDING

The bedding surface for the pipe shall provide a firm foundation of uniform density throughout the entire length of the pipe.

3.2.1 Concrete Pipe Requirements

When no bedding class is specified or detailed on the drawings, concrete pipe shall be bedded in granular material minimum 4 inch in depth in trenches with soil foundation. Depth of granular bedding in trenches with rock foundation shall be 1/2 inch in depth per foot of depth of fill, minimum depth of bedding shall be 8 inch up to maximum depth of 24 inches. The middle third of the granular bedding shall be loosely placed. Bell

CONFORMED

holes and depressions for joints shall be removed and formed so entire barrel of pipe is uniformly supported. The bell hole and depressions for the joints shall be not more than the length, depth, and width required for properly making the particular type of joint.

3.2.2 Plastic Pipe

Bedding for PE pipe shall meet the requirements of ASTM D2321. Use Class IB or II material for bedding, haunching, and initial backfill.

3.3 PLACING PIPE

Each pipe shall be thoroughly examined before being laid; defective or damaged pipe shall not be used. Plastic pipe shall be protected from exposure to direct sunlight prior to laying, if necessary to maintain adequate pipe stiffness and meet installation deflection requirements. Pipelines shall be laid to the grades and alignment indicated. Proper facilities shall be provided for lowering sections of pipe into trenches. Lifting lugs in vertically elongated metal pipe shall be placed in the same vertical plane as the major axis of the pipe. Pipe shall not be laid in water, and pipe shall not be laid when trench conditions or weather are unsuitable for such work. Diversion of drainage or dewatering of trenches during construction shall be provided as necessary. Deflection of installed flexible pipe shall not exceed the following limits:

TYPE OF PIPE	MAXIMUM ALLOWABLE DEFLECTION (percent)
Plastic (HDPE)	5

Note post installation requirements of paragraph DEFLECTION TESTING in PART 3 of this specification for all pipe products including deflection testing requirements for flexible pipe.

3.3.1 Concrete Pipe

Laying shall proceed upgrade with spigot ends of bell-and-spigot pipe pointing in the direction of the flow.

3.3.2 PE Pipe

Laying shall be with the separate sections joined firmly on a bed shaped to line and grade and shall follow manufacturer's guidelines.

3.3.3 Multiple Culverts

Where multiple lines of pipe are installed, adjacent sides of pipe shall be at least half the nominal pipe diameter or 3 feet apart, whichever is less.

3.4 JOINTING

3.4.1 Concrete Pipe

3.4.1.1 Flexible Watertight Joints

CONFORMED

Gaskets and jointing materials shall be as recommended by the particular manufacturer in regard to use of lubricants, cements, adhesives, and other special installation requirements. Surfaces to receive lubricants, cements, or adhesives shall be clean and dry. Gaskets and jointing materials shall be affixed to the pipe not more than 24 hours prior to the installation of the pipe, and shall be protected from the sun, blowing dust, and other deleterious agents at all times. Gaskets and jointing materials shall be inspected before installing the pipe; any loose or improperly affixed gaskets and jointing materials shall be removed and replaced. The pipe shall be aligned with the previously installed pipe, and the joint pushed home. If, while the joint is being made the gasket becomes visibly dislocated the pipe shall be removed and the joint remade.

3.5 DRAINAGE STRUCTURES

3.5.1 Manholes and Inlets

Construction shall be of reinforced concrete, plain concrete, brick, precast reinforced concrete, precast concrete segmental blocks, prefabricated corrugated metal, or bituminous coated corrugated metal; complete with frames and covers or gratings; and with fixed galvanized steel ladders where indicated. Pipe studs and junction chambers of prefabricated corrugated metal manholes shall be fully bituminous-coated and paved when the connecting branch lines are so treated. Pipe connections to concrete manholes and inlets shall be made with flexible, watertight connectors.

3.5.2 Walls and Headwalls

Construction shall be as indicated.

3.6 STEEL LADDER INSTALLATION

Ladder shall be adequately anchored to the wall by means of steel inserts spaced not more than 6 feet vertically, and shall be installed to provide at least 6 inches of space between the wall and the rungs. The wall along the line of the ladder shall be vertical for its entire length.

3.7 BACKFILLING

3.7.1 Backfilling Pipe in Trenches

After the pipe has been properly bedded, selected material from excavation or borrow, at a moisture content that will facilitate compaction, shall be placed along both sides of pipe in layers not exceeding 6 inches in compacted depth. The backfill shall be brought up evenly on both sides of pipe for the full length of pipe. The fill shall be thoroughly compacted under the haunches of the pipe. Each layer shall be thoroughly compacted with mechanical tampers or rammers. This method of filling and compacting shall continue until the fill has reached an elevation equal to the midpoint (spring line) of RCP or has reached an elevation of at least 12 inches above the top of the pipe for flexible pipe. The remainder of the trench shall be backfilled and compacted by spreading and rolling or compacted by mechanical rammers or tampers in layers not exceeding 6 inches. Tests for density shall be made as necessary to ensure conformance to the compaction requirements specified below.

CONFORMED

3.7.2 Backfilling Pipe in Fill Sections

For pipe placed in fill sections, backfill material and the placement and compaction procedures shall be as specified below. The fill material shall be uniformly spread in layers longitudinally on both sides of the pipe, not exceeding 6 inches in compacted depth, and shall be compacted by rolling parallel with pipe or by mechanical tamping or ramming. Prior to commencing normal filling operations, the crown width of the fill at a height of 12 inches above the top of the pipe shall extend a distance of not less than twice the outside pipe diameter on each side of the pipe or 12 feet, whichever is less. After the backfill has reached at least 12 inches above the top of the pipe, the remainder of the fill shall be placed and thoroughly compacted in layers not exceeding 6 inches.

3.7.3 Movement of Construction Machinery

When compacting by rolling or operating heavy equipment parallel with the pipe, displacement of or injury to the pipe shall be avoided. Movement of construction machinery over a culvert or storm drain at any stage of construction shall be at the Contractor's risk. Any damaged pipe shall be repaired or replaced.

3.7.4 Compaction

3.7.4.1 General Requirements

Cohesionless materials include gravels, gravel-sand mixtures, sands, and gravelly sands. Cohesive materials include clayey and silty gravels, gravel-silt mixtures, clayey and silty sands, sand-clay mixtures, clays, silts, and very fine sands. When results of compaction tests for moisture-density relations are recorded on graphs, cohesionless soils will show straight lines or reverse-shaped moisture-density curves, and cohesive soils will show normal moisture-density curves.

3.7.4.2 Minimum Density

Backfill over and around the pipe and backfill around and adjacent to drainage structures shall be compacted at the approved moisture content to the following applicable minimum density, which will be determined as specified below.

a. Under paved roads, streets, parking areas, and similar-use pavements including adjacent shoulder areas, the density shall be not less than 90 percent of maximum density for cohesive material and 95 percent of maximum density for cohesionless material, up to the elevation where requirements for pavement subgrade materials and compaction shall control.

b. Under unpaved or turfed traffic areas, density shall not be less than 90 percent of maximum density for cohesive material and 95 percent of maximum density for cohesionless material.

c. Under nontraffic areas, density shall be not less than that of the surrounding material.

3.7.5 Determination of Density

CONFORMED

Testing is the responsibility of the Contractor and performed at no additional cost to the Government. Testing shall be performed by an approved commercial testing laboratory or by the Contractor subject to approval. Tests shall be performed in sufficient number to ensure that specified density is being obtained. Laboratory tests for moisture-density relations shall be made in accordance with ASTM D1557 except that mechanical tampers may be used provided the results are correlated with those obtained with the specified hand tamper. Field density tests shall be determined in accordance with ASTM D2167 or ASTM D6938. When ASTM D6938 is used, the calibration curves shall be checked and adjusted, if necessary, using the sand cone method as described in paragraph Calibration of the referenced publications. ASTM D6938 results in a wet unit weight of soil and ASTM D6938 shall be used to determine the moisture content of the soil. The calibration curves furnished with the moisture gauges shall be checked along with density calibration checks as described in ASTM D6938. Test results shall be furnished the Contracting Officer. The calibration checks of both the density and moisture gauges shall be made at the beginning of a job on each different type of material encountered and at intervals as directed.

3.8 INSTALLATION OF FLAP GATE CHECK VALVES

The manufacturer shall provide a representative to assist the installation contractor on installation procedures and to conduct a site inspection of the installed unit. The manufacturer's representative shall submit documentation to the Engineer that the valve has been installed in accordance with the manufacturer's recommended installation procedures.

The elastomer check valve manufacturer shall provide a one year warranty against defective workmanship and/or defective materials when properly installed, operated and serviced in accordance with the manufacturer's recommendations and shall be effective from the date of inspection and installation approval by the manufacturer's representative.

-- End of Section --

CONFORMED

SECTION TABLE OF CONTENTS

DIVISION 33 - UTILITIES

SECTION 33 46 16

SUBDRAINAGE SYSTEM

04/08

PART 1 GENERAL

1.1 REFERENCES
1.2 SUBMITTALS
1.3 DELIVERY, STORAGE, AND HANDLING
1.3.1 Delivery and Storage
1.3.2 Handling

PART 2 PRODUCTS

2.1 PIPE FOR SUBDRAINS
2.1.1 Plastic
2.1.1.1 Polyvinyl Chloride (PVC) and Fittings
2.1.1.2 Corrugated Polyethylene (PE) and Fittings
2.1.1.3 Pipe Perforations
2.2 FILTER FABRIC
2.3 SUBDRAIN FILTER AND BEDDING MATERIAL

PART 3 EXECUTION

3.1 EXCAVATION AND BEDDING FOR SUBDRAIN SYSTEMS
3.2 INSTALLATION OF FILTER FABRIC AND PIPE FOR SUBDRAINS
3.2.1 Installation of Filter Fabric
3.2.1.1 Overlaps on Perforated or Slotted Pipes
3.2.1.2 Installation on Open-Joint Pipe
3.2.1.3 Trench Lining and Overlaps
3.2.2 Installation of Pipe for Subdrains
3.2.2.1 Pipe Laying
3.2.2.2 Jointings
3.3 INSTALLATION OF AND BACKFILLING FOR BLIND OR FRENCH DRAINS
3.4 INSTALLATION OF FILTER MATERIAL AND BACKFILLING FOR SUBDRAINS
3.5 TESTS
3.5.1 Pipe Test

-- End of Section Table of Contents --

CONFORMED

SECTION 33 46 16

SUBDRAINAGE SYSTEM
04/08

PART 1 GENERAL

1.1 REFERENCES

The publications listed below form a part of this specification to the extent referenced. The publications are referred to within the text by the basic designation only.

ASTM INTERNATIONAL (ASTM)

ASTM C33/C33M	(2013) Standard Specification for Concrete Aggregates
ASTM D3034	(2014) Standard Specification for Type PSM Poly(Vinyl Chloride) (PVC) Sewer Pipe and Fittings
ASTM D3212	(2007; R 2013) Standard Specification for Joints for Drain and Sewer Plastic Pipes Using Flexible Elastomeric Seals
ASTM D4632/D4632M	(2008; R 2013; E 2013; E 2014) Grab Breaking Load and Elongation of Geotextiles
ASTM F405	(2013) Corrugated Polyethylene (PE) Tubing and Fittings
ASTM F667	(2012) Large Diameter Corrugated Polyethylene Pipe and Fittings
ASTM F758	(1995; E 2007; R 2007) Smooth-Wall Poly(Vinyl Chloride) (PVC) Plastic Underdrain Systems for Highway, Airport, and Similar Drainage
ASTM F949	(2010) Poly(Vinyl Chloride) (PVC) Corrugated Sewer Pipe with a Smooth Interior and Fittings

1.2 SUBMITTALS

Government approval is required for submittals with a "G" designation; submittals not having a "G" designation are for information only. When used, a designation following the "G" designation identifies the office that will review the submittal for the Government. Submit the following in accordance with Section 01 33 00 SUBMITTAL PROCEDURES:

SD-04 Samples

Filter Fabric
Pipe for Subdrains

CONFORMED

SD-07 Certificates

Filter Fabric
Pipe for Subdrains

1.3 DELIVERY, STORAGE, AND HANDLING

1.3.1 Delivery and Storage

Inspect materials delivered to site for damage; unload, and store with minimum handling. Do not store materials directly on the ground. The inside of pipes and fittings shall be free of dirt and debris. Keep, during shipment and storage, filter fabric wrapped in burlap or similar heavy duty protective covering. The storage area shall protect the fabric from mud, soil, dust, and debris. Filter fabric materials that are not to be installed immediately shall not be stored in direct sunlight. Install plastic pipe within 6 months from the date of manufacture unless otherwise approved.

1.3.2 Handling

Handle materials in such a manner as to ensure delivery to the trench in sound undamaged condition. Pipe shall be carried and not dragged to the trench.

PART 2 PRODUCTS

2.1 PIPE FOR SUBDRAINS

Submit samples of pipe, and pipe fittings, before starting the work. Pipe for subdrains shall be of the types and sizes indicated. Submit certifications from the manufacturers attesting that materials meet specification requirements. Certificates are required for drain pipe, drain tile, and fittings.

2.1.1 Plastic

Plastic pipe shall contain ultraviolet inhibitor to provide protection from exposure to direct sunlight.

2.1.1.1 Polyvinyl Chloride (PVC) and Fittings

Polyvinyl chloride (PVC) pipe and fittings shall conform to ASTM D3034, ASTM F949, ASTM F758, Type PS 46.

2.1.1.2 Corrugated Polyethylene (PE) and Fittings

Use ASTM F405 for pipes 3 to 6 inches in diameter, inclusive, ASTM F667 for pipes 8 to 24 inches in diameter. Fittings shall be manufacturer's standard type and shall conform to the indicated specification.

2.1.1.3 Pipe Perforations

Water inlet area shall be a minimum of 0.5 square inch per linear foot. Manufacturer's standard perforated pipe which essentially meets these requirements may be substituted with prior approval of the Contracting Officer.

CONFORMED

a. Circular Perforations in Plastic Pipe: Circular holes shall be cleanly cut not more than 3/8 inch or less than 3/16 inch in diameter and arranged in rows parallel to the longitudinal axis of the pipe. Perforations shall be approximately 3 inches center-to-center along rows. The rows shall be approximately 1-1/2 inches apart and arranged in a staggered pattern so that all perforations lie at the midpoint between perforations in adjacent rows. The rows shall be spaced over not more than 120 degrees of circumference. The spigot or tongue end of the pipe shall not be perforated for a length equal to the depth of the socket, and perforations shall continue at uniform spacing over the entire length of the pipe.

b. Slotted Perforations in Plastic Pipe: Circumferential slots shall be cleanly cut so as not to restrict the inflow of water and uniformly spaced along the length and circumference of the tubing. Width of slots shall not exceed 1/8 inch nor be less than 1/32 inch. The length of individual slots shall not exceed 1-1/4 inches on 3 inch diameter tubing, 10 percent of the tubing inside nominal circumference on 4 to 8 inch diameter tubing, and 2-1/2 inches on 10 inch diameter tubing. Rows of slots shall be symmetrically spaced so that they are fully contained in 2 quadrants of the pipe. Slots shall be centered in the valleys of the corrugations of profile wall pipe.

2.2 FILTER FABRIC

Submit samples of filter fabric, and certifications from the manufacturers attesting that filter fabric meets specification requirements. Provide geotextile that is a nonwoven pervious sheet of polymeric material consisting of long-chain synthetic polymers composed of at least 95 percent by weight polypropylene (PP) or polyester (PET). The use of woven slit film geotextiles (i.e. geotextiles made from yarns of a flat, tape-like character) will not be allowed. Add stabilizers and/or inhibitors to the base polymer, as needed, to make the filaments resistant to deterioration by ultraviolet light, oxidation, and heat exposure. The filter fabric shall provide an equivalent opening size (AOS) no finer than the US Standard Sieve No. 80 and no coarser than the US Standard Sieve No. 70. AOS is defined as the number of the US Standard sieve having openings closest in size to the filter fabric openings. The fabric shall have a grab strength of 160 pounds in accordance with ASTM D4632/D4632M. The fabric shall be constructed so that the filaments will retain their relative position with respect to each other. The edges of the fabric shall be selvaged or otherwise finished to prevent the outer material from pulling away from the fabric. The fabric shall be woven into a width that may be installed as shown without longitudinal seams.

2.3 SUBDRAIN FILTER AND BEDDING MATERIAL

Subdrain filter and bedding material shall be washed sand, sand and gravel, crushed stone, or crushed stone screenings composed of hard, tough, durable particles free from adherent coatings and meeting the requirements of ASTM C33/C33M. Filter material shall not contain corrosive agents, organic matter, or soft, friable, thin, or elongated particles and shall be evenly graded between the limits specified in TABLE I. Gradation curves will exhibit no abrupt changes in slope denoting skip or gap grading. Filter materials shall be clean and free from soil and foreign materials. Filter blankets found to be dirty or otherwise contaminated shall be removed and replaced with material meeting the specific requirements, at no additional cost to the Government.

CONFORMED

TABLE I. SUBDRAIN FILTER GRADATION

Sieve	Percent by Weight Passing
1 1/2"	100%
1"	90 - 100%
3/4"	55 - 85%
3/8"	8 - 20%
No. 4	0 - 5%
No. 8	0 - 5%
No. 200	0 - 2%

PART 3 EXECUTION

3.1 EXCAVATION AND BEDDING FOR SUBDRAIN SYSTEMS

Trenching and excavation, including the removal of rock and unstable material, shall be in accordance with Section 31 00 00 EARTHWORK. Bedding material shall be placed in the trench as indicated or as required as replacement materials used in those areas where unstable materials were removed. Compaction of the bedding material shall be as specified for cohesionless material in Section 31 00 00 EARTHWORK.

3.2 INSTALLATION OF FILTER FABRIC AND PIPE FOR SUBDRAINS

3.2.1 Installation of Filter Fabric

3.2.1.1 Overlaps on Perforated or Slotted Pipes

One layer of filter fabric shall be wrapped around perforated or slotted collector pipes in such a manner that longitudinal overlaps of fabric are in unperforated or unslotted quadrants of the pipes. The overlap shall be at least 2 inches. The fabric shall be secured to the pipe in such a manner that backfill material will not infiltrate through any fabric overlaps.

3.2.1.2 Installation on Open-Joint Pipe

One layer of filter fabric shall be wrapped around open joints. The overlap should be at least 2 inches. The fabric shall be secured to the pipe in such a manner that backfill material will not infiltrate through the overlap or the edges of the fabric to either side of the open joint.

3.2.1.3 Trench Lining and Overlaps

Trenches to be lined with filter fabric shall be graded to obtain smooth side and bottom surfaces so that the fabric will not bridge cavities in the soil or be damaged by projecting rock. The fabric shall be laid flat but not stretched on the soil, and it shall be secured with anchor pins. Overlaps shall be at least 6 inches, and anchor pins shall be used along the overlaps.

3.2.2 Installation of Pipe for Subdrains

3.2.2.1 Pipe Laying

Each pipe shall be carefully inspected before it is laid. Any defective or damaged pipe shall be rejected. No pipe shall be laid when the trench conditions or weather is unsuitable for such work. Water shall be removed

CONFORMED

from trenches by sump pumping or other approved methods. The pipe shall be laid to the grades and alignment as indicated. The pipe shall be bedded to the established gradeline. Perforations shall be centered on the bottom of the pipe. Pipes of either the bell-and-spigot type or the tongue-and-groove type shall be laid with the bell or groove ends upstream. All pipes in place shall be approved before backfilling.

3.2.2.2 Jointings

a. Polyvinyl Chloride (PVC) Pipe: Joints shall be in accordance with the requirements of ASTM D3034, ASTM D3212, or ASTM F949.

b. Perforated Corrugated Polyethylene Pipe: Perforated corrugated polyethylene drainage pipe shall be installed in accordance with the manufacturer's specifications and as specified herein. A pipe with physical imperfections shall not be installed. No more than 5 percent stretch in a section will be permitted.

3.3 INSTALLATION OF AND BACKFILLING FOR BLIND OR FRENCH DRAINS

Filter material shall be placed as indicated and compacted as specified for cohesionless materials in Section 31 00 00 EARTHWORK. Filter material shall extend to a suitable outlet or to an outlet through a pipeline as indicated. Overlying backfill material shall be placed and compacted as specified in Section 31 00 00 EARTHWORK.

3.4 INSTALLATION OF FILTER MATERIAL AND BACKFILLING FOR SUBDRAINS

After pipe for subdrains has been laid, inspected, and approved, filter material shall be placed around and over the pipe to the depth indicated. The filter material shall be placed in layers not to exceed 8 inches thick, and each layer shall be thoroughly compacted by mechanical tampers or rammers to obtain the required density. Compaction of filter material and the placement and compaction of overlying backfill material shall be in accordance with the applicable provisions specified in Section 31 00 00 EARTHWORK.

3.5 TESTS

3.5.1 Pipe Test

Strength tests of pipe shall conform to field service test requirements of the Federal Specification, ASTM specification, or AASHTO specification covering the product (paragraph PIPE FOR SUBDRAINS).

-- End of Section --

CONFORMED

SECTION 34 11 00

RAILROAD TRACK AND ACCESSORIES
04/08

PART 1 GENERAL

1.1 REFERENCES

The publications listed below form a part of this specification to the extent referenced. The publications are referred to within the text by the basic designation only.

AMERICAN RAILWAY ENGINEERING AND MAINTENANCE-OF-WAY ASSOCIATION (AREMA)

AREMA Eng Man	(2015) Manual for Railway Engineering

ASTM INTERNATIONAL (ASTM)

ASTM C117	(2013) Standard Test Method for Materials Finer than 75-um (No. 200) Sieve in Mineral Aggregates by Washing
ASTM C127	(2015) Standard Test Method for Density, Relative Density (Specific Gravity), and Absorption of Coarse Aggregate
ASTM C131/C131M	(2014) Standard Test Method for Resistance to Degradation of Small-Size Coarse Aggregate by Abrasion and Impact in the Los Angeles Machine
ASTM C136/C136M	(2014) Standard Test Method for Sieve Analysis of Fine and Coarse Aggregates
ASTM C142/C142M	(2010) Standard Test Method for Clay Lumps and Friable Particles in Aggregates
ASTM C535	(2012) Standard Test Method for Resistance to Degradation of Large-Size Coarse Aggregate by Abrasion and Impact in the Los Angeles Machine
ASTM C702/C702M	(2011) Reducing Samples of Aggregate to Testing Size
ASTM C88	(2013) Standard Test Method for Soundness of Aggregates by Use of Sodium Sulfate or Magnesium Sulfate
ASTM D1556/D1556M	(2015) Standard Test Method for Density and Unit Weight of Soil in Place by Sand-Cone Method

CONFORMED

ASTM D1557	(2012) Standard Test Methods for Laboratory Compaction Characteristics of Soil Using Modified Effort (56,000 ft-lbf/ft3) (2700 kN-m/m3)
ASTM D3740	(2012a) Minimum Requirements for Agencies Engaged in the Testing and/or Inspection of Soil and Rock as Used in Engineering Design and Construction
ASTM D4791	(2010) Flat Particles, Elongated Particles, or Flat and Elongated Particles in Coarse Aggregate
ASTM D75/D75M	(2014) Standard Practice for Sampling Aggregates
ASTM E11	(2015) Wire Cloth and Sieves for Testing Purposes

U.S. FEDERAL HIGHWAY ADMINISTRATION (FHWA)

CAMUTCD	(2015) California Manual on Uniform Traffic Control Devices

1.2 SUBMITTALS

Government approval is required for submittals with a "G" designation; submittals not having a "G" designation are for Contractor Quality Control approval. Submit the following in accordance with Section 01 33 00 SUBMITTAL PROCEDURES:

SD-04 Samples

Subballast

SD-07 Certificates

Subballast

SD-11 Closeout Submittals

As-Built Drawings; G

1.3 QUALITY ASSURANCE

1.3.1 Track Construction

Perform track construction under the direction of qualified and competent supervisory personnel experienced in railroad construction.

CONFORMED

1.3.2 Welding

NOT USED

1.4 REMOVAL AND DISPOSAL OF WOOD BRIDGE

1.4.1 General Requirements

California has special disposal and handling requirements for treated wood waste (TWW). TWW includes ties, wood bridge components, signal poles, etc. The contractor shall follow UPRR guidelines for performing work around TWW and handling requirements.

a. UPRR does not require testing for TWW. TWW must be disposed at an approved landfill. See section RWQCB Approved Treated Wood Waste Landfill.

b. TWW should be kept separate from other waste and materials. Store TWW off the ground, either on blocks, concrete surfaces, or in containers. Cover TWW during inclement weather

c. Accumulate TWW away from public access. Do NOT burn.

d. Label the TWW bundle/container with the following information: TWW Handler Name, Address, and accumulation date. The label shall indicate "TREATED WOOD WASTE - DO NOT BURN OR SCAVENGE."

e. Transport to approved landfill facility. Any saw dust must be captured and managed as TWW. Identify waste as TWW to the disposal facility.

f. TWW can be shipped using a shipping document, bill of lading, or invoice. Fax a copy of TWW shipping document to the Manager Environmental Field Operations at 402-271-3390.

g. Provide Site name/number, address, contact info and mailing address to the TWW facility.

h. Keep records for at least three years from date of shipment. The record shall clearly identify name and address of TWW facility, weight of TWW (actual weight or estimated), and date of shipment of TWW.

1.4.2 RWQCB Approved Treated Wood Waste Landfills

a. Altamont Landfill and Resource Recovery Facility
10840 Altamont Pass Road, Livermore, CA 946551. (800) 449-6349.

b. Vasco Road Sanitary Landfill
4001 North Vasco Road, Livermore, CA 94550. (925) 447-0491.

1.5 DELIVERY, STORAGE, AND HANDLING

1.5.1 Materials and Samples

Submit a complete schedule of the materials proposed for installation within 60 days of receipt of notice to proceed, and before installation of the materials; the schedule shall include a list of equipment proposed for the work. The Contracting Officer will notify the Contractor of the materials

CONFORMED

approved or disapproved. Disapproved materials that have already been delivered to the project site, shall be promptly segregated from the approved materials and removed from the premises. If materials are disapproved, acceptable replacement materials shall be provided at no additional cost to the Government. Submit performance data for components or products proposed as an equivalent to those specified. The Contracting Officer's written approval is required for any such equivalent type component or product proposed to be used. Initial approval by the Contracting Officer will not prevent the removal and replacement of materials that are materially defective or materials not meeting this specification that are discovered during construction and/or routine quality control/quality assurance operations. Submit manufacturer's certificates of conformance for the following materials:

a. Subballast

1.6 PROJECT/SITE CONDITIONS

1.6.1 Temporary Work

Provide, during construction, suitable roads and crossings with all necessary lights, signs, drainage, and other appurtenances required for safe public and local travel. Erect and maintain suitable temporary fences where required to prevent trespass upon work or damage to adjoining property. Drainage shall be maintained, and the accumulation of water that might affect the stability of the roadbed will not be permitted.

1.6.2 Traffic Control

Obtain necessary permits from state and local governments for work over public roads. Prepare traffic maintenance and detour plans; submit them for approval to the appropriate authorities; erect and maintain signs, barricades, lighting, and other traffic control devices in accordance with CAMUTCD; pay for police details; and stage the work to provide for the continued safe public use of the roadways in and adjacent to the project site.

Traffic control devices shall comply with CAMUTCD. Suitable warning signs shall be placed near the beginning of the work site and well ahead of the work site for alerting approaching traffic from both directions. Small markers shall be placed along newly painted lines or freshly placed raised markers to control traffic and prevent damage to newly painted surfaces or displacement of raised pavement markers. Painting equipment shall be marked with large warning signs indicating slow-moving painting equipment in operation.

1.6.3 Welding

Welding shall not be performed in rain, snow, or other inclement weather without adequately protecting the weld from the elements.

1.6.4 License Agreement

The work under this contract is being accomplished under a license agreement between the Union Pacific Railroad RAIL CORPORATION (hereinafter referred to as the Railroad Company) and the Santa Clara Valley Water District executed on [_____].

CONFORMED

1.6.4.1 Provisions and Requirements

The following provisions and requirements are made a part of this contract in order for the UNITED STATES OF AMERICA to perform its obligations under the License agreement:

a. Perform the work in conformance with the standards of care and practice appropriate to the nature of the work.

b. Allow the Railroad Company to view and inspect the work at any time.

c. Do not enter the Railroad Company's premises until specifically authorized by the Contracting Officer. Notify the Contracting Officer at least 7 days prior to the planned date for entering the premises of the Railroad Company.

d. Take any safety precautions that the Railroad Company deems necessary. No equipment, unless being utilized to perform work on the railroad track, shall be located within 12 ft of the centerline of the nearest railroad track. Such equipment allowed within 12 ft of the centerline of the nearest railroad track shall be attended at all times.

e. Furnish evidence of Workmen's Compensation coverage for both itself and for all subcontractors.

g. All work adjacent to the UPRR property requires a signed (1) agreement for channel construction and maintenance and (2) a right of entry agreement. A copy of these two agreements are available in Appendix J.

h. The insurance requirements for work on or near the Union Pacific Railroad property is detailed in Exhibit C of the C&M agreement which can be found in Appendix J."

PART 2 PRODUCTS

2.1 BALLAST

2.2 SUBBALLAST

Subballast shall consist of aggregate-soil materials conforming to Gradation shown for UP subballast, Per UPRR Std DWG 0010E mixture.

2.3 JOINT BARS

NOT USED

2.3.1 New Joint Bars

NOT USED

2.3.2 Compromise Joint Bars

NOT USED

CONFORMED

2.3.2.1 New Compromise Joint Bars

NOT USED

2.4 GREASE

NOT USED

2.5 OIL FOR CORROSION PROTECTION

NOT USED

2.6 RAIL

NOT USED

2.6.1 Used Jointed Rail

2.6.1.1 Relay Rail

NOT USED

2.6.1.1.1 Rail Drilling

NOT USED

2.6.1.1.2 Length

NOT USED

2.6.1.1.3 Maximum Allowable Wear

NOT USED

2.6.1.1.4 Condition and Appearance

NOT USED

2.6.1.1.4.1 Maximum Allowable Lip

NOT USED

2.6.1.1.4.2 Engine Burns

NOT USED

2.6.1.1.4.3 End Batter and Chipping

NOT USED

2.6.1.1.4.4 Running Surface Damage

NOT USED

CONFORMED

2.6.1.1.4.5 Defects Not Permitted

NOT USED

2.7 TIE PLATES

2.7.1 General

NOT USED

2.8 WOOD TIES

NOT USED

2.8.1 Crossties

NOT USED

2.8.1.1 Except at Road Crossings

NOT USED

2.8.1.2 At Road Crossings

NOT USED

2.8.2 Switch Ties

NOT USED

2.8.3 Tie Plugs

NOT USED

2.8.4 Anti-splitting Devices

NOT USED

2.9 GRADE CROSSINGS

2.9.1 Crossing Material or Surface

NOT USED

2.9.2 Rail

NOT USED

2.9.3 Ties

NOT USED

2.9.4 Track Materials

CONFORMED

NOT USED

2.9.5 Threaded Fasteners and Screw Spikes

NOT USED

2.10 MISCELLANEOUS TRACK MATERIALS

NOT USED

2.10.1 Spikes

2.10.1.1 Track Spikes

NOT USED

2.10.2 Bolts, Nuts, and Spring Washers

NOT USED

2.10.2.1 Bolts and Nuts

NOT USED

2.10.2.2 Spring Washers

NOT USED

2.10.3 Rail Anchors

NOT USED

2.10.3.1 New Installation

NOT USED

2.10.3.2 Rail Clips and Fasteners

NOT USED

2.11 SALVAGED MATERIALS

2.11.1 Dunnage

NOT USED

2.11.2 Marking Paint
NOT USED

2.11.3 Salvaging Rail

NOT USED

2.11.4 Joint Bars

NOT USED

CONFORMED

2.11.5 Tie Plates

NOT USED

2.12 RAIL BONDING AND GROUNDING

2.12.1 Rail Bonds

NOT USED

2.12.2 Grounding Rods

NOT USED

2.12.3 Ground Connection Cables

NOT USED

2.12.4 Electrical Connecting Hardware

NOT USED

2.13 WELDING

2.13.1 Rail Welding Kits

NOT USED

2.13.2 Electrodes

NOT USED

PART 3 EXECUTION

3.1 TRACK STANDARD REFERENCES

The following rules, standards, specification and references shall apply to all work within ROW:

A. Union Pacific Railroad Safety Rules
B. Union Pacific Railroad Maintenance of Way Rules
C. Union Pacific Railroad Engineering Standards

D. AREMA: Manual for Railway Engineering
E. Track Safety Standards of the Federal Railroad Administration

3.2 REMOVAL, SALVAGE, AND DISPOSITION OF MATERIALS

3.2.1 Materials To Be Salvaged

NOT USED

3.2.2 Methods and Procedures

CONFORMED

3.2.3 Inventory of Track Materials

3.2.4 Inspection and Reconditioning of Used Track Materials

3.2.4.1 Cleaning By Hand or Mechanical Means

3.2.4.2 Visual Examination of Rails

NOT USED

3.2.4.3 Visual Examination of Joint Bars

NOT USED

3.2.4.4 Visual Examination of Gage Rods

NOT USED

3.2.4.5 Visual Examination of Tie Plates and Rail Anchors

NOT USED

3.2.4.6 Gage Rods

NOT USED

3.2.4.7 Grade Crossing Materials

NOT USED

3.2.5 Transport and Stack Excess and Salvaged Materials

3.2.5.1 Material Not Used In Track Repair

NOT USED

3.2.5.2 Stacking of Rails

NOT USED

3.2.5.3 Stacking of Joint Bars, Gage Rods, and Tie Plates

NOT USED

3.2.5.4 Containers

NOT USED

3.2.5.5 Stacking of Special Trackwork Materials

NOT USED

3.2.6 Material to be Scrapped

CONFORMED

NOT USED

3.3 PLACEMENT OF BALLAST

3.3.1 Subballast

3.3.1.1 Subballast Placement

Subballast shall be placed in uniform horizontal lifts of not more than 6 inch for the full width of the cross-section to the total depth indicated. Each subballast layer shall be shaped to a section conforming to the subballast section shown on the drawings and shall be thoroughly compacted.

3.3.1.2 Subballast Compaction

Each subballast lift shall be compacted using approved compaction equipment. The roller weights, vibration frequencies (where applicable), tire pressures (where applicable), and number of passes shall be sufficient to obtain in-place densities across the full width of the subballast and throughout the entire depth of the layer of not less than 95 percent of the ASTM D1557 laboratory maximum dry density for the subballast material. Prior to placement of subsequent subballast layers the top of the previous layer shall be scarified to a depth of approximately 2 inch to insure proper bond of the layers. Density shall be field measured in accordance with ASTM D1556/D1556M(base plate, as shown in the drawing shall be used) One field density tests shall be taken for each 1000 square yards of each layer of material placed in each area.

3.3.2 Ballast

3.3.2.1 Ballast Placement

NOT USED

3.3.2.2 Ballast Distribution

NOT USED

3.3.2.3 Ballast Below Ties

NOT USED

3.4 TRACK CONSTRUCTION AND OUT-OF-FACE RELAY

NOT USED

3.4.1 Roadbed Preparation

Clearing and grubbing, grading, excavation, embankment preparation, and subgrade preparation shall be performed in accordance with Section 31 00 00. Roadbed surface, grade, and drainage shall be approved prior to any distribution of construction material. Where the subballast or roadbed is damaged during distribution of materials, ruts and depressions shall be filled and compacted and the roadbed surface reapproved prior to track construction.

CONFORMED

3.4.2 Unloading the Materials

NOT USED

3.4.3 Ties

NOT USED

3.4.4 Tie Plates

NOT USED

3.4.5 Rail

NOT USED

3.4.5.1 Laying Rail

NOT USED

3.4.5.2 Joints

NOT USED

3.4.5.3 Expansion Allowance

NOT USED

3.4.5.4 Cutting Rail

NOT USED

3.4.5.5 Matching Rails

NOT USED

3.4.5.6 Rail Replacement

NOT USED

3.4.5.7 Out-of-Face Rail Relay

NOT USED

3.4.5.8 Spot Rail Replacement

NOT USED

3.4.5.8.1 Replacement Rail

NOT USED

3.4.5.8.2 Spot Rail Replacement Resulting in Joint Staggers

NOT USED

3.4.6 Joint Bars

CONFORMED

NOT USED

3.4.7 Spiking

3.4.7.1 Spiking Procedures

NOT USED

3.4.7.2 Number of Spikes

NOT USED

3.4.8 Tie Plugs

NOT USED

3.4.9 Rail Anchor Placement

NOT USED

3.4.10 Preliminary Surfacing

NOT USED

3.4.10.1 Lifts

NOT USED

3.4.10.2 Tamping

3.4.10.3 Replacement of Ties

NOT USED

3.4.10.4 Track Off The Ends of Open Deck Bridges

NOT USED

3.4.10.5 Runoff of Track Raises

NOT USED

3.4.10.6 Horizontal Realignment

NOT USED

3.4.11 Final Surfacing

NOT USED

3.4.11.1 Final Tamping

NOT USED

3.4.11.2 Final Alignment

CONFORMED

NOT USED

3.4.11.3 Final Dressing

NOT USED

3.4.11.4 Surplus Ballast

3.4.12 Cleanup

Upon completion of the work, remove all rubbish, waste, and discarded materials generated by the work from the project area. Areas where the Contractor has worked, including but not limited to, project areas, material storage sites, and borrow or disposal areas shall be left in a clean, well-graded, and well-drained condition.

3.4.12.1 Shoulder Removal and Reconstruction

Where track construction or rehabilitation operations result in deposition of materials along the track shoulders that would impede the free drainage of the geotextile and track structure, remove the material. Where undercutting operations leave fouled shoulder materials that impede free drainage of the geotextile and the track structure, the shoulder material shall be removed, and the ballast shoulders shall be reconstructed using the materials and dimensions as indicated. Areas where shoulder removal and reconstruction are required are not indicated on the drawings.

3.4.12.2 Spoil Materials

Spoil materials removed from the track shall be disposed of as indicated. Spoil materials shall not be placed on the shoulders, in ditches, in drains, or in other areas where they would impede the flow of water away from the track.

3.4.13 Final Adjustments

NOT USED

3.4.14 Tolerances for Finished Track

NOT USED

3.4.14.1 Gage

NOT USED

3.4.14.2 Alignment

NOT USED

3.4.14.3 Track Surface

NOT USED

3.4.14.4 Guard Face Gage

CONFORMED

NOT USED

3.4.14.5 Guard Check Gage

NOT USED

3.5 HIGHWAY CROSSINGS

NOT USED

3.5.1 Subgrade

NOT USED

3.5.2 Ballast Placement and Surfacing

NOT USED

3.5.3 Ties

NOT USED

3.5.4 Tie Plates, Spikes, and Anchors

NOT USED

3.5.5 Rail

NOT USED

3.5.6 Lining and Surfacing

NOT USED

3.5.7 Crossing Surface

NOT USED

3.5.7.1 Type 3a Asphalt Crossings

NOT USED

3.5.8 Signs and Signals

NOT USED

3.5.8.1 Location and Positioning of Signs

NOT USED

3.5.8.2 Traffic Control

NOT USED

3.5.9 Crossing Flangeways

NOT USED

CONFORMED

3.5.9.1 Flangeway Filler

NOT USED

3.5.9.2 Clean Grade Crossing Flangeways

NOT USED

3.5.10 As-Built Drawings

NOT USED

3.6 BONDING AND GROUNDING TRACK

NOT USED

3.6.1 Rail Joint Bond

NOT USED

3.6.2 Rail Cross-Bond and Ground

NOT USED

3.6.3 Inspection of Rail Bond and Ground

NOT USED

3.6.4 Rail Bonds At Signalized Grade Crossings

NOT USED

3.6.5 Existing Bonds

NOT USED

3.6.6 Removal of Defective Bonds

NOT USED

3.7 INSTALLATION OF MISCELLANEOUS TRACK MATERIALS

3.7.1 Tie Plates

NOT USED

3.7.2 Insulated Joints

NOT USED

3.7.3 Gage Rods

NOT USED

3.7.4 Installation of Joint Bars

CONFORMED

NOT USED

3.8 THERMITE WELDING PROCEDURES

NOT USED

3.8.1 End Preparation

NOT USED

3.8.1.1 Cleaning

NOT USED

3.8.1.2 Gap and Alignment

NOT USED

3.8.2 Surface Misalignment Tolerance

NOT USED

3.8.3 Gage Misalignment Tolerance

NOT USED

3.8.4 Thermite Welding

NOT USED

3.8.4.1 Thermite Weld Preheating

NOT USED

3.8.4.2 Thermite Weld Cooling

NOT USED

3.8.5 Weld Finishing and Tolerances

NOT USED

3.8.6 Weld Quality

NOT USED

3.8.7 Weld Numbering

NOT USED

3.9 TRACK REPAIR

3.9.1 Cutting and Drilling of Rail

NOT USED

CONFORMED

3.9.2 Rail Joints

NOT USED

3.9.2.1 Used Bolt Assemblies

NOT USED

3.9.2.2 Joint Repair

NOT USED

3.9.2.3 Cleaning of Finishing Area

NOT USED

3.9.2.4 Rail Ends

NOT USED

3.9.2.5 Joint Gap

NOT USED

3.9.3 Spiking

NOT USED

3.9.4 Spot Tie Replacement

NOT USED

3.9.4.1 Paint Markings and Tie Inspection
NOT USED

3.9.4.2 Additional Tie Work

NOT USED

3.9.4.3 Old Spikes, Rail Anchors, tags and Tie Plates

NOT USED

3.9.4.4 Humped Track

NOT USED

3.9.4.5 Minimal Humping

NOT USED

3.9.4.6 Fouled or Muddy Ballast

NOT USED

3.9.4.7 Insertion of New Ties

CONFORMED

NOT USED

3.9.4.8 Positioning of Tie Plates

NOT USED

3.9.4.9 Re-spacing of existing ties

NOT USED

3.9.4.10 Track Gage

NOT USED

3.9.4.10.1 Tangent Track

NOT USED

3.9.4.10.2 Curved Track

NOT USED

3.9.5 Joint Respiking

NOT USED

3.9.5.1 Substitution of Tie Plates

NOT USED

3.9.5.2 Respiked Joints

NOT USED

3.9.6 Regaging

NOT USED

3.10 SAMPLING AND TESTING

Sampling and testing of subballast is the responsibility of the Contractor. Submit one certified copy of Test Reports for each test performed on the ballast within 2 working days of the test completion. Sampling and testing shall be performed by an approved commercial testing laboratory, or by the Contractor, subject to approval. If the Contractor elects to establish testing facilities, approval of such facilities shall be based on compliance with ASTM D3740. Work requiring testing will not be permitted until the Contractor's facilities have been inspected and approved. The first inspection of the facilities will be at the expense of the Government and any subsequent inspections required because of failure of the first inspection shall be at the expense of the Contractor. Such costs will be deducted from the total amount due the Contractor.

3.10.1 Subballast Samples

Periodic sampling and testing of ballast material shall be performed to ensure continued compliance with this specification. During construction,

CONFORMED

one representative sample of the ballast material shall be taken from each 2,000 tons of ballast delivered to determine the material gradation. For each 10,000 tons or a fraction thereof of ballast delivered, an additional amount of material shall be obtained in order to perform the quality and soundness tests specified. Samples for material gradation, quality, and soundness tests shall be taken in conformance with ASTM D75/D75M. Test samples shall be reduced from field samples in conformance with ASTM C702/C702M. Sample sizes shall be sufficient to provide the minimum sample sizes required by the designated test procedures. If any individual sample fails to meet the gradation requirement, placement shall be halted and immediate corrective action shall be taken to restore the specified gradation. If any individual sample fails to meet the specified quality and soundness requirements, placement shall be halted and immediate corrective action shall be taken to restore the specified quality.

3.10.2 Ballast Tests

3.10.2.1 Sieve Analyses

Sieve analyses shall be made in conformance with ASTM C117 and ASTM C136/C136M. Sieves shall conform to ASTM E11.

3.10.2.2 Bulk Specific Gravity and Absorption

Bulk specific gravity and absorption tests shall be made in conformance with ASTM C127.

3.10.2.3 Percentage of Clay Lumps and Friable Particles

The percentage of clay lumps and friable particles shall be determined in conformance with ASTM C142/C142M.

3.10.2.4 Degradation Resistance

Resistance to degradation of materials shall be determined in conformance with ASTM C131/C131M and ASTM C535. Materials with gradations having 100 percent passing the 1 in sieve, shall be tested in conformance with ASTM C131/C131M. Materials having gradations with particles larger than 1 in shall be tested in conformance with ASTM C535.

3.10.2.5 Soundness Test

Soundness tests shall be made in conformance with ASTM C88.

3.10.2.6 Percentage of Flat or Elongated Particles

The percentage of flat or elongated particles shall be determined in conformance with ASTM D4791.

3.10.3 Tie Inspection

NOT USED

3.11 INSPECTION AND FIELD TESTING

NOT USED

CONFORMED

3.11.1 Track

NOT USED

3.11.2 Welded Joints - Visual Inspection

NOT USED

3.11.3 Electric Arc Welding Inspection

NOT USED

3.11.4 Thermite Weld Joints Testing

NOT USED

3.11.5 Electric Arc Weld Testing
NOT USED

3.11.6 Inspection of Geotextile

NOT USED

3.11.7 Testing Relay Rail

3.11.7.1 Testing for Wear

NOT USED

3.11.7.2 Testing for Defects

NOT USED

-- End of Section --

CONFORMED

SECTION TABLE OF CONTENTS

DIVISION 35 - WATERWAY AND MARINE CONSTRUCTION

SECTION 35 31 19

STONE PROTECTION FOR STRUCTURES

01/08

PART 1 GENERAL

1.1 REFERENCES
1.2 SUBMITTALS
1.3 Quality Acceptance Process
1.3.1 Designation of Stone Source(s)
1.3.2 Examination and Testing of Stone Source
1.3.2.1 Demonstration Stockpiles and Replacements
1.3.2.2 Sampling of the Stone Source
1.3.3 Protection-stone Source Authorization
1.3.3.1 Protection-stone Criteria for Acceptance
1.3.4 Test Schedule, Reporting for Field Testing of Stone
1.3.5 Cost Responsibilities for In-lab and In-field Stone Sampling, Shipping, and Testing

PART 2 PRODUCTS

2.1 Protection Stone
2.1.1 Riprap
2.2 BEDDING STONE
2.2.1 General
2.2.2 Material
2.3 Grout
2.3.1 Cementitious Materials
2.3.1.1 Portland Cement
2.3.1.2 Pozzolan
2.3.2 Aggregates for Grout
2.3.3 Admixtures
2.3.4 Curing Materials
2.3.5 Water
2.3.6 Equipment

PART 3 EXECUTION

3.1 BASE PREPARATION
3.2 Placement of Bedding Stone Layer
3.2.1 General
3.2.2 Placement of Bedding Stone On Prepared Base
3.2.3 Construction Tolerance
3.3 Placement of Riprap
3.3.1 Demonstration Sections
3.3.2 Demonstration Section Evaluation
3.3.3 Placement Of Riprap
3.3.3.1 Construction Tolerance
3.3.4 Quality Control Of Stone Work
3.3.4.1 Gradation Tests For Quality Control

CONFORMED

3.3.4.2 Other In-Place Tests
3.3.4.3 Rejected Stone
3.3.4.4 Debris
3.3.4.5 Quarry Operations
3.3.5 Waybills and Delivery Tickets for Truck Transport
3.4 GROUTING OF STONE PROTECTION
3.4.1 Producing, Conveying and Placing of Grout
3.4.1.1 Producing Grout
3.4.1.2 Preparation for Placing
3.4.1.3 Conveying and Placing
3.4.1.4 Cold-Weather Requirements
3.4.1.5 Hot Weather Requirements
3.4.2 Curing and Protection of Grouted Stone Protection

-- End of Section Table of Contents --

CONFORMED

SECTION 35 31 19

STONE PROTECTION FOR STRUCTURES
01/08

PART 1 GENERAL

1.1 REFERENCES

The publications listed below form a part of this specification to the extent referenced. The publications are referred to within the text by the basic designation only.

AMERICAN CONCRETE INSTITUTE INTERNATIONAL (ACI)

ACI 305R	(2010) Guide to Hot Weather Concreting

ASTM INTERNATIONAL (ASTM)

ASTM C127	(2015) Standard Test Method for Density, Relative Density (Specific Gravity), and Absorption of Coarse Aggregate
ASTM C131/C131M	(2014) Standard Test Method for Resistance to Degradation of Small-Size Coarse Aggregate by Abrasion and Impact in the Los Angeles Machine
ASTM C136	(2006) Standard Test Method for Sieve Analysis of Fine and Coarse Aggregates
ASTM C150/C150M	(2012) Standard Specification for Portland Cement
ASTM C171	(2007) Standard Specification for Sheet Materials for Curing Concrete
ASTM C260/C260M	(2010a) Standard Specification for Air-Entraining Admixtures for Concrete
ASTM C295/C295M	(2012) Petrographic Examination of Aggregates for Concrete
ASTM C309	(2011) Standard Specification for Liquid Membrane-Forming Compounds for Curing Concrete
ASTM C33/C33M	(2013) Standard Specification for Concrete Aggregates
ASTM C494/C494M	(2013) Standard Specification for Chemical Admixtures for Concrete
ASTM C535	(2012) Standard Test Method for Resistance to Degradation of Large-Size Coarse Aggregate by Abrasion and Impact in the Los Angeles Machine

CONFORMED

ASTM C618	(2012a) Standard Specification for Coal Fly Ash and Raw or Calcined Natural Pozzolan for Use in Concrete
ASTM C685/C685M	(2011) Concrete Made by Volumetric Batching and Continuous Mixing
ASTM C702/C702M	(2011) Reducing Samples of Aggregate to Testing Size
ASTM C88	(2013) Standard Test Method for Soundness of Aggregates by Use of Sodium Sulfate or Magnesium Sulfate
ASTM C94/C94M	(2015) Standard Specification for Ready-Mixed Concrete
ASTM D1141	(1998; R 2013) Standard Practice for the Preparation of Substitute Ocean Water
ASTM D4791	(2010) Flat Particles, Elongated Particles, or Flat and Elongated Particles in Coarse Aggregate
ASTM D4992	(2007) Evaluation of Rock to be Used for Erosion Control
ASTM D5312/D5312M	(2012; R 2013) Evaluation of Durability of Rock for Erosion Control Under Freezing and Thawing Conditions
ASTM D5313/D5313M	(2012; R 2013) Evaluation of Durability of Rock for Erosion Control Under Wetting and Drying Conditions
ASTM D5519	(2007) Particle Size Analysis of Natural and Man-Made Riprap Materials
ASTM D653	(2014) Standard Terminology Relating To Soil, Rock, and Contained Fluids
ASTM E11	(2015) Wire Cloth and Sieves for Testing Purposes

NATIONAL INSTITUTE OF STANDARDS AND TECHNOLOGY (NIST)

NIST HB 44	(2013) Specifications, Tolerances, and Other Technical Requirements for Weighing and Measuring Devices

U.S. ARMY CORPS OF ENGINEERS (USACE)

COE CRD-C 148	(1969) Method of Testing Stone for Expansive Breakdown on Soaking in Ethylene Glycol
COE CRD-C 169	(1997) Standard Test Method for Resistance of Rock to Wetting and Drying

CONFORMED

COE CRD-C 400 (1963) Requirements for Water for Use in Mixing or Curing Concrete

1.2 SUBMITTALS

Government approval is required for submittals with a "G" designation; submittals not having a "G" designation are for information only. When used, a designation following the "G" designation identifies the office that will review the submittal for the Government. The following shall be submitted in accordance with Section 01 33 00 SUBMITTAL PROCEDURES:

SD-03 Product Data

Riprap; G

Bedding Stone Source and Characteristics; G

Bulk Specific Gravity Tests; G
Report the bulk specific gravity (SSD) of the designated stone source(s) as per paragraph 1.3.3.1 ("bulk specific gravity tests"); that value shall be delivered to the Government at the same time that the stone source is designated.

Ready-Mixed Concrete Grout; G
Batching and Mixing Equipment; G
Admixtures; G
Curing Materials; G
Conveying and Placing; G

SD-06 Test Reports

Gradation Test; G, ED
The gradation tests using the GRADATION TEST DATA SHEET enclosed at end of this section for Riprap and Bedding Stone.

All Other Stone Quality Acceptance Test Results; G
A copy of the laboratory reports for all tests run that verify that stone quality is in accordance with PART 1 paragraph 1.3.3.1 Protection-stone Criteria for Acceptance.

Bulk Specific Gravity Test
At least 60 calendar days in advance of shipment of stone to the work site, a copy of bulk specific gravity test results for each gradation range of stone proposed to be furnished. The information shall be furnished prior to preparation of pre-production demonstration stockpiles.

SD-07 Certificates

Stone and Bedding Stone
Certificates of compliance attesting that the materials meet specification requirements.

Laboratory; G, ED-GD
A copy of the documents, provided by the Materials Testing Center (MTC) at CEWES or other governmental agency, that validates that the laboratory can perform the required tests. The individual tests shall be listed for which the validation covers.

CONFORMED

Weigh Scale Certification
A copy of the certification from the regulation agency attesting to the scale's accuracy.

Certified Weight Scale Tickets
A copy of each certified weight scale ticket 3 working day(s) after weighing.

1.3 Quality Acceptance Process

1.3.1 Designation of Stone Source(s)

1.3.2 Examination and Testing of Stone Source

The Contractor's protection stone source shall be examined by the Contracting Officer at the source site (presumably, a quarry), the need for sampling determined, and samples collected. Also present at this examination shall be a representative of the Contractor, a representative of the quarry, and a geologist from the US Army Corps of Engineers, Geotechnical Branch. The Government objective will be to verify whether acceptable stone can be produced from the proposed source. Quarry faces and extent of the deposit will be examined, but the focus will be on demonstration stockpile(s) prepared by the Contractor. The Contractor shall notify the Contracting Officer when demonstration stockpiles are ready for evaluation.

1.3.2.1 Demonstration Stockpiles and Replacements

The Contractor shall arrange for and provide pre-production demonstration stockpiles for each of the stone sources and stone size ranges for the project so that they can be evaluated by the Government.

The demonstration stockpiles shall be located at the sources of the stone and be shaped in windrow fashion to allow maximum exposure of the stone to the examiners. The Contractor shall arrange to have individual stones or stone layers turned as necessary to accommodate the Contracting Officer's evaluation. All stone in the demonstration stockpiles shall be representative of the overall quality of materials in the source and shall not consist of the best specimens unless it is reasonable to expect that the source will provide the required amount of stone of the applicable size ranges with a degree of quality no less than that existing in the demonstration stockpiles.

The minimum quantity of stone in each demonstration stockpile shall be based on the quantity of that stone type to be used, overall, on the project: 1% by weight of that total shall be in each demonstration stockpile. One combined demonstration stockpile can be used, if only one stone source is designated. If so, it shall be a minimum of 75 tons (short tons, 2,000 lbs per short ton) because an estimate of approximately 7,500 tons of protection stone will be used overall on this project.

The Contracting Officer may reject certain stone in the demonstration stockpiles, using any of the stone quality acceptance criteria listed under paragraph 1.3.3.1 as the basis for rejection, and marking rejected stones with paint. Such rejected stones shall be removed to a reject stockpile. If more than 5% of a demonstration stockpile is rejected, the entire stockpile will be rejected by the Government and a replacement stockpile shall be created by the Contractor for re-evaluation. If the replacement

CONFORMED

stockpile is rejected, the Contractor shall create another replacement demonstration stockpile for evaluation. If the third demonstration stockpile for a particular size range at a single source is found unacceptable, the source will be disapproved for such size range and a new source shall be submitted for approval. The Contractor may, of its own accord, choose a replacement source at the time a first or second demonstration stockpile is found unacceptable. The replacement of demonstration stockpiles or stone sources shall be at no additional cost to the Government and with no change in the submittal schedule or time of completion of the project.

1.3.2.2 Sampling of the Stone Source

The Contracting Officer may elect to require sampling of the designated stone source. Criteria for when sampling is required or optional are in paragraph 1.3.3.1 ("Determining the Need for Laboratory Testing or Waiver"). If sampling is done, it will be in the presence of the personnel listed in paragraph 1.3.2. The sample will be representative of the designated source, primarily taken from the demonstration stockpile, but if there are questions about the continuity of the deposit in the same quality as represented in the demonstration stockpile, sampling of some quarry faces also may be undertaken. Sample size and shipment responsibilities are addressed in "In the event that laboratory testing is needed", paragraph 1.3.3.1, and paragraphs 1.3.4 and 1.3.5. Separate samples shall be required for each rock strata or type designated for the project. For this project, only one laboratory sample from the designated stone source is needed because only one stone size is to be used.

1.3.3 Protection-stone Source Authorization

Before any stone is produced for work under this contract, the source or sources of stone must be authorized by the Contracting Officer. The Contracting Officer will assess the results of the visual examination of the source and stockpiles and laboratory testing, and the initial gradation test. If the Contracting Officer finds the results suitable, as per criteria listed in paragraph 1.3.3.1, the demonstration stockpile will be accepted and the Contractor will be notified in writing that the designated stone source is authorized, whereupon the Contractor may proceed with production of materials for the project, provided they remain consistent with demonstration stockpiles.

1.3.3.1 Protection-stone Criteria for Acceptance

The criteria listed below will be applied at all stages of the operations, including examination of the designated source(s) and demonstration stockpile(s), and any subsequent quality-control or quality assurance sampling deemed necessary by the Contracting Officer.

Criteria for stone acceptance are the following; there are "general" and "laboratory test" criteria, and "field test criteria" as described below. The general criteria are these. All protection stone shall be:

· From a source for which the Contractor shall show that an adequate quantity of material is available.

· Durable material of a suitable quality to ensure permanence after being placed.

· Free from cracks, blast fractures, bedding, seams and other defects

CONFORMED

that would tend to increase its deterioration from natural causes. Inspections for cracks, fractures, seams and defects shall be made by visual examination. If, by visual examination, it is determined that 10 percent or more of the stone produced contains hairline cracks, then all stone produced by the means and measures which caused the fractures shall be rejected. A hairline crack that is defined as being detrimental shall have a minimum width of 0.1 mm and shall be continuous for one-third the dimension of at least two sides of the stone.

· Clean and adequately free from all foreign matter (any foreign material adhering to or combined with the stone as a result of stockpiling shall be removed prior to placement).

· Meeting all the prescribed stone acceptance criteria and pass all the tests as detailed in paragraph 1.3.3.1.

· Of the same lithology (rock type) as the stone for which stone quality acceptance test results or service records were provided and used as a basis for authorization of the source.

· Accepted by the Contracting Officer from an authorized source (see paragraph 1.3.3).

The laboratory test group of criteria used to determine stone acceptance for this project shall include the following laboratory stone acceptance tests and criteria.

Bulk Specific Gravity Test. Determine bulk specific gravity, saturated, surface dry (SSD) using test method ASTM C127. All stone shall have a minimum bulk specific gravity, saturated surface dry (SSD), of at least 2.65.

Absorption (and unit weight). Determine absorption and unit weight using test method ASTM C127, with this exception: calculate unit weight bulk specific gravity, saturated surface dry. Absorption criteria for all stone shall be less than 2 percent unless the Contracting Officer allows a waiver based on other tests and service records (see service record definition below under "Determining the Need for Laboratory Testing or Waiver", paragraph 1.3.3.1).

Abrasion - L. A. Rattler. Determine abrasion loss in accordance with ASTM C535. Maximum allowable loss shall be 50% at 1,000 revolutions unless the Contracting Officer allows a waiver based on satisfactory service record (see service record definition below under "Determining the Need for Laboratory Testing or Waiver", paragraph 1.3.3.1).

Wetting and Drying. Determine durability under wetting and drying conditions as per the SPD Lab Wetting and Drying Test Procedure (a.k.a. " SPD Lab Test Procedure 1"). For a stone source to be placed on this job, including any and all sources of stone not used previously on US Army Corps of Engineers projects, this test must be run and the stone must pass the test. Failure of the test is indicated when bonding of the surface grains of the stone softens and causes general disintegration of the surface material; a weakening and loss of individual surface particles is permissible as long as it does not indicate this softening of bonding and a start of general disintegration. SPD Lab Test Procedure 1 is based largely on standardized wetting and drying tests of COE CRD-C 169 and ASTM D5313/D5313M, but varies from those reference specifications in that the stone will be tested through 15 cycles of wetting and drying, instead

CONFORMED

of the 30 cycles prescribed by COE CRD-C 169 or the 80 cycles prescribed by ASTM D5313/D5313M.

The following steps of SPD Lab Test Procedure 1 shall be followed. Examine the entire sample to select four representative test specimens. From two separate test specimens, cut one-inch-thick slabs with a rock saw. Each slab is to have a minimum surface area of 30 square inches on one side; slab thickness tolerance is plus-or-minus one-quarter inch. The other two test specimens will be blocks of stone approximately 3 by 4 inches on one side. These blocks will not be cut. Carefully examine all four specimens under low-power microscope and note and record all surface features, with particular attention to flaws and cracks. Oven dry the four specimens at 140 degrees F. for eight hours, cool and weigh them to the nearest tenth of a gram, then photograph them in color to show all surface features before the wetting and drying cycles are begun. Run fifteen cycles of wetting and drying on each specimen, with one slab and one block subjected to wetting and drying cycles in fresh tap water and the other slab and block subjected to the cycles using a salt water prepared in accordance with ASTM D1141. One cycle of wetting and drying consists of soaking specimens for sixteen hours at room temperature in the water and then drying in an oven for eight hours at 140 degrees F. Examine the specimens after each cycle with the low-power microscope to check for opening or movement of fractures, flaking along edges, swelling of clays, softening of rock surfaces, heaving of micaceous minerals, breakdown of matrix material and any other evidence of weakness developing in the rock. Record the cycle in which any of these changes occur. After the fifteenth cycle, oven dry, weigh, and photograph the specimens in color, along with all particles that may have broken off during the test. Report the test findings and include these photographs in that report.

Sulfate Soundness. Determine sulfate soundness in accordance with ASTM C88. Maximum allowable loss shall be 10% unless the Contracting Officer allows a waiver based on satisfactory service record (see service record definition below under "Determining the Need for Laboratory Testing or Waiver", paragraph 1.3.3.1). The test shall be made on 50 particles each weighing 100 grams, +/- 5 grams, in lieu of the gradation given in ASTM C88.

X-ray diffraction. Stone shall be subjected to X-ray diffraction analysis in accordance with ASTM C295/C295M. The stone must not contain any expansive clays. In a departure from ASTM C295/C295M, the results of this test shall be incorporated into a detailed report, as per note c) under "petrographic examination", below.

Petrographic examination. Determine petrographic characteristics in accordance with ASTM C295/C295M, and include information required by ASTM D4992, paragraph 10. COE CRD-C 148 shall be used to perform Ethylene Glycol tests required on rocks containing smectite and on samples identified to contain swelling clays. Exceptions to ASTM C295/C295M that shall be prepared:

a) A colored microscopic photograph shall be made of each stone type (whether igneous, sedimentary or metamorphic) and the individual minerals within the stone type shall be identified by labels and arrows upon the photograph.

b) A very detailed macroscopic and microscopic description shall be made of the stone, to include the entire mineral constituents, individual sizes, their approximate percentages and mineralogical histories. A discussion of stone hardness, texture, weathering and

CONFORMED

durability factors shall be included.

c) A written final laboratory report on the suitability of the stone for use as protection stone protection based upon the petrographic examination, and the X-ray diffraction and abrasion loss tests.

Freeze-thaw durability. Determine in accordance with ASTM D5312/D5312M. Ten cycles of freezing and thawing constitutes a complete test. Issue report, with photographs, as indicated in ASTM D5312/D5312M. Determine appropriate number of test specimens as per section 7 of ASTM D5312/D5312M.

Determining the Need for Laboratory Testing or Waiver. Use of the stone source stone may be acceptable without laboratory testing, provided that a satisfactory service record for that stone has been established, and the Contracting Officer elects to accept those data. A satisfactory service record has been established for the designated source stone if the stone: 1) has been in place on a constructed feature for a minimum of 5 years without significant deterioration, while 2) having been placed in a layer of similar thickness or on a similar structure as this project; and 3) in a similar size gradation as this project; and 4) was under similar exposure / climatic conditions as are anticipated for this project; and 5) verifiable records of this service are available.

Passing laboratory testing results from a previous test of a stone source are valid for no more than five years from the date of testing. Even with this tested-within-the-past-5-years documentation, the Contracting Officer retains the option to elect to have other representative samples taken and tested at the Contractor's expense. If service records are unavailable, or if the Contractor proposes to furnish stone from an unlisted source, or from a listed source that has not been tested in 5 years, the Government will require the Contractor to conduct laboratory stone acceptance tests under paragraph 1.3.3.1 to assure the acceptability of the stone. The full laboratory suite of Stone Quality Acceptance Tests listed above, will have to be run on the Cinder Lake basalt, should it be chosen as the source, because it has been more than 5 years since this suite was run on the material. No other sources have been tested in recent times, under this test suite, so, virtually any stone source selected in the region for this job will need testing.

In the event that laboratory testing is needed, the following test schedule, sample size, and reporting criteria apply for Laboratory Stone Acceptance Testing. Samples for laboratory stone acceptance tests shall be submitted to the testing laboratory a minimum of 45 calendar days in advance of the time when the stone will be required in the work. Each sample shall consist of at least 300 lbs of stone. Tests shall be performed on the stone samples collected from stockpiles or other areas identified by the Contracting Officer. The results of the tests shall be delivered to the Contracting Officer as soon as they are received from the laboratory. Lab-certified test results must be received and approved by the Contracting Officer before any stone is used in the work. The lab-certified test results shall represent tested stone that actually was or will be shipped from the source to this job site. These procedures shall be followed each time the Contracting Officer determines that a test is needed.

Field Test Criteria for Stone Acceptance are comprised of the following.

(a) Proportional Dimension Limitations (aspect ratio). This criterion is to assure that overall shape of the individual stone pieces is not linear

CONFORMED

or elongate, but instead is blocky, with the different sides of the stone pieces being roughly equal in area. The actual test may not be done for this project. The initial determination is based solely on field observation by the Contracting Officer. If those observations suggest the stone is not within the proportional dimension limitations, a test may be ordered by the Contracting Officer and this test most likely would be conducted in the field, either at the source or at the construction site. In such a case, ASTM D4791 and ASTM D653 shall be used as a guide to perform the measurements and define the terminology. The guidelines are: Stone shape shall be such that the ratio of the greatest dimension to the least dimension of any piece of stone shall be not greater than 3:1 when measured across a mutually perpendicular axis. Further, not more than 25 percent (25%) of the stones within a gradation range shall have an aspect ratio greater than 2.5:1. A maximum of 5 percent flat and elongated pieces by weight will be acceptable. This shall apply to all size ranges used for the project. A flat and elongated piece of protection stone is defined as having a ratio of width to thickness or length to width greater than 3:1. The minimum sample size, considering the size of stone to be used on this project and criteria in ASTM D4791, shall be 3 tons, but the sample may be mixed and quartered prior to testing, as per ASTM C702/C702M, Method B, to proportionately reduce the mass of the sample. Thus, measurements (i.e., "the test") will be made on only 1-½ tons of material. This shall constitute one test.

(b) Gradation. Quality-Control Tests shall be conducted as indicated below. All stone shall be within specified gradation shown in table A, below. If the stone is delivered by the truckload, each truckload shall be representative of the gradation requirements. One gradation test for each stone size of each designated stone source is required for initial acceptance of the stone source. Subsequently, to maintain quality control, recurring, routine gradation tests will be done, on a frequency determined according to the total estimated quantity of stone to be delivered for this project. Frequency of this testing is listed below. The Contracting Officer may call for additional tests beyond these routine, recurring tests, if the stone gradation becomes questionable at any point in the construction process.

Gradation of Riprap. The Contractor shall perform gradation tests on protection stone in accordance with ASTM D5519, Test Method A (size-mass grading) and shall report test results to the Contracting Officer. The Contractor shall notify the Contracting Officer not less than 3 days in advance of each test and shall collect the sample in the presence of the Contracting Officer. In the event of unavailability of the Contracting Officer, the Contractor shall perform the tests and certify to the Contracting Officer that the protection stone shipped complies with the specifications. Each gradation sample shall be on materials that actually will be or have been shipped to the project; shall consist of not less than 3 tons of protection stone; and shall be collected in a manner that provides a sample accurately reflecting the actual gradation arriving at the jobsite. One gradation test shall be required on the Riprap per 2,000 tons of each type of protection stone delivered. No in-place tests (i.e., tests on placed stone) shall be done for this routine, recurring test. Tests may be on truckloads of material delivered to the site, unless otherwise directed by the Contracting Officer. These required, routine, recurring tests shall be done at the Contractor's expense. The first of the gradation tests shall be performed, and results delivered to and approved by the Contracting Officer prior to shipment of any stone to the job site. Failure of the initial test and of a gradation test on a replacement sample will be considered cause for rejection of the stone

CONFORMED

source quarry and/or quarry process. All stone represented by the failed tests shall be set aside and not incorporated into the work. Any additional tests required because of the failure of an initial test sample will not be considered as one of the other required tests and shall be at the Contractor's expense. Protection stone for this project shall be reasonably well-graded within the limits specified in Table A.

Table A - Stone Gradation

	Limits of Stone Weight (Lb)						D30	D90
Stone Size	For Percent Lighter By Weight						Min	Min
	100%		50%		15%		(Lb)	(Lb)
9-in	36	15	11	7	5	2	4.1	12.2
12-in	86	35	26	17	13	5	9.0	28.0
15-in	169	67	50	34	25	11	18.5	55.7
24-in	691	276	205	138	102	13	74.5	224.1

1.3.4 Test Schedule, Reporting for Field Testing of Stone

Tests shall be performed on the stone samples collected from shipments, stockpiles, or other areas identified by the Contracting Officer. The results of the field tests shall be delivered to the Contracting Officer as soon as the test data are compiled and checked by the CQC staff. Results that deal with initial stone acceptance criteria (e.g., the initial gradation tests) must be received by the Contracting Officer at the jobsite before any stone is used in the work. All test results shall represent stone that actually was or will be shipped from the source to this job site. These procedures shall be followed each time the Contracting Officer determines that a test is needed.

1.3.5 Cost Responsibilities for In-lab and In-field Stone Sampling, Shipping, and Testing

The Contractor shall bear all costs of the initial stone quality acceptance testing in the laboratory and in the field, including the sample collection, measurement, packaging, shipping to the lab, and all lab costs. The Contractor shall bear all costs of any follow-up sampling required in the event that samples or stockpiles fail the tests or are rejected by the Contracting Officer for any reason. The Contractor shall bear all costs of initial gradation tests for acceptance, replacement testing for failed initial gradation tests, and recurring, routine gradation tests for quality control as called for under paragraph 1.3.3.1, and 3.3.1. No routine, recurring, laboratory stone acceptance tests are planned after construction begins (i.e., the tests described in paragraphs 1.3.3.1). If any were to be ordered by the Contracting Officer, this would be a result of suspected stone quality problems observed during construction. In the event that any additional laboratory or gradation tests are called for by the Contracting Officer during construction, beyond those described in paragraphs 1.3.3.1, the Contractor shall bear all costs related to any failing tests, while the Government bears all costs of passing tests and will make an equitable adjustment in the contract price

CONFORMED

for the sampling and testing upon receipt and acceptance of certified lab results or, in the instance of field tests covered in this specification section ONLY (Section 35 31 19), results certified by the Contractor's quality control manager.

PART 2 PRODUCTS

2.1 Protection Stone

Protection stone for this project will consist of Riprap. Estimated quantities of each stone type are called out in the Specification Section 00 41 00, BID SCHEDULE.

2.1.1 Riprap

Angular stone shall be used for Riprap. Note the definition of "angular" stone in COE EM 1110-2-1601 (p. 3-1). Stone quality shall be as specified in paragraph 1.3.3.1. Stone gradations shall be as specified in Table A. Riprap estimated quantities are listed in the Specification Section 00 41 00, BID SCHEDULE.

2.2 BEDDING STONE

2.2.1 General

Bedding Stone shall consist of a washed gravel or crushed stone, and will be placed beneath riprap larger than 12" at locations where any geomembrane underlying the protection stone needs to be protected from puncture by the large, angular stone, as shown in the plans.

2.2.2 Material

Bedding material shall be composed of tough, durable particles, adequately free from thin, flat and elongated pieces, and shall contain no organic matter nor soft, friable particles in quantities considered objectionable by the Contracting Officer. Bedding Stone shall meet the quality requirements of ASTM C33/C33M and shall have a maximum size of 2 inches and conform to the gradation listed in Table B. Sieves shall conform to ASTM E11.

Table B - Gradation of Bedding Stone

SIEVE SIZES	Operating Range (%)
2"	100
1.5"	90 - 100
3/4"	50 - 85
No. 4	25 - 45
No. 30	10 - 25
No. 200	2 - 9

Bedding Stone shall not show more than 40 percent loss when subjected to the Los Angeles abrasion test in accordance with ASTM C131/C131M. The

CONFORMED

amount of flat and elongated particles shall not exceed 30 percent. A flat particle is one having a ratio of width to thickness greater than 3; an elongated particle is one having a ratio of length to width greater than 3. In the portion retained on each sieve specified, the crushed aggregates shall contain at least 50 percent by weight of crushed pieces having two or more freshly fractured faces with the area of each face being at least equal to 75 percent of the smallest midsectional area of the piece. When two fractures are contiguous, the angle between planes of the fractures must be at least 30 degrees in order to count as two fractured faces. Crushed gravel shall be manufactured from gravel particles 50 percent of which, by weight, are retained on the maximum size sieve listed in the table above.

2.3 Grout

2.3.1 Cementitious Materials

Cementitious materials will be accepted on the basis of a manufacturer's certificate of compliance, accompanied by mill test reports, that the materials meet the requirements of the specification under which it is furnished.

2.3.1.1 Portland Cement

ASTM C150/C150M, Type I or II, low alkali.

2.3.1.2 Pozzolan

ASTM C618, Class C or F, including requirements of Tables 1A and 2A. Pozzolan in amount not to exceed 25 percent, based on absolute volume, may be substituted for an equivalent amount of portland cement in the grout mixture proportions.

2.3.2 Aggregates for Grout

The fine aggregates for grout shall meet the quality and gradation requirements of either ASTM C33/C33M or paragraph REGULATORY REQUIREMENTS. The coarse aggregates shall meet the quality and gradation requirements of ASTM C33/C33M, Class designation 4M, Size No. 67, 7 or 8.

2.3.3 Admixtures

Submit manufacturers' literature for the admixtures and curing materials. Admixtures to be used, when required or approved, shall comply with the following:

a. Air-Entraining Admixture: ASTM C260/C260M.

b. Water-Reducing or Retarding Admixture: ASTM C494/C494M, Type A, B, or D.

2.3.4 Curing Materials

Curing materials shall be as follows:

a. Impervious Sheet Materials: ASTM C171, type optional, except polyethylene film, if used, shall be white opaque.

b. Membrane-Forming Curing Compound: ASTM C309, Type 1-D, Class A or B.

CONFORMED

2.3.5 Water

Water for mixing and curing shall be fresh, clean, potable, and free from injurious amounts of oil, acid, salt, alkali, except that nonpotable water may be used if it meets the requirements of COE CRD-C 400.

2.3.6 Equipment

Batching and mixing equipment will be accepted on the basis of manufacturer's data which demonstrates compliance with the applicable specifications.

PART 3 EXECUTION

3.1 BASE PREPARATION

Areas on which stone and bedding stone to be placed shall be graded and/or dressed to conform to cross sections shown on the contract drawings within an allowable tolerance of plus 2 inches and minus 1 inches from the theoretical lines and grades shown on the plans, except that the extreme of this tolerance shall not be continuous over an area greater than 200 square feet. The prepared base shall be approved by the Contracting Officer. Where such areas are below the allowable minus tolerance limit they shall be brought to grade by fill with earth similar to the adjacent material and then compacted to a density equal to the adjacent in place material. No payment will be made for any material thus required. Immediately prior to placing the bedding stone and stone, the prepared base will be inspected by the Contracting Officer and no material shall be placed thereon until that area has been approved.

3.2 Placement of Bedding Stone Layer

3.2.1 General

All bedding stone shall be placed on a layer of geotextile or as shown on the plans. A Bedding Stone layer shall be placed on the prepared base as described above, only at locations specified on the plans.

3.2.2 Placement of Bedding Stone On Prepared Base

Bedding Stone shall be spread uniformly, in a satisfactory manner, on the prepared base to the lines and grades as indicated on the contract drawings and in such manner as to avoid damage to the prepared base. Any damage to the prepared surface of the base during placing of the Bedding Stone shall be repaired before proceeding with the work. Placing of Bedding Stone by methods which tend to segregate the particle sizes within the bedding layer will not be permitted. Placement shall begin at the bottom of the area to be covered and continue up slope. Subsequent loads of material shall be placed against previously placed material in such a manner as to ensure a relatively homogenous mass. Compaction of material placed on the prepared base will not be required, but the material surface shall be finished to present an adequately even surface, free from mounds or windrows.

For quality control, perform at least one gradation test on Bedding Stone for each 5,000 tons placed in accordance with ASTM C136.

CONFORMED

3.2.3 Construction Tolerance

The finished surface and Bedding Stone thickness shall not deviate from the lines and grades shown by more than the tolerances listed. Tolerances are measured perpendicular to the indicated neatlines. A tolerance of plus or minus 2 inches from the slope lines and grades when measured with a 10-foot straightedge will be allowed, except that either extreme of such tolerance shall not be continuous over an area greater than 200 square feet.

The intention is that the work shall be built to the required elevations, slope and grade. Outer surfaces shall be even and present a neat appearance. Placed material not meeting these limits shall be removed or reworked as directed by the Contracting Officer. Payment will not be made for excess material that the Contracting Officer permits to remain in place.

3.3 Placement of Riprap

3.3.1 Demonstration Sections

The Contractor shall construct separate demonstration sections of Riprap on the slopes to demonstrate proposed operations. The sections shall demonstrate procedures, methods, equipment, and capability for placing stone within the tolerances specified. The demonstration sections shall consist of the area as identified in the plans and shall be at least 50 ft wide and extend the full height of the to-be-protected slope. For each stone type used, the laboratory stone acceptance tests and initial gradation tests will have to be completed, reported to, and approved by the Contracting Officer prior to starting a demonstration section placement.

3.3.2 Demonstration Section Evaluation

The demonstration sections shall conform to all applicable requirements specified herein. Only accepted stone may be placed in a demonstration section. All stone shall be subject to acceptance by the Contracting Officer. The stone must meet the quality standards listed under paragraphs 1.3.3.1 and the gradation standard listed in Table A, as appropriate. The Contractor shall not proceed with stone placement prior to the approval of the demonstration section by the Contracting Officer. Within a period of 3 days after completion of the section, the Contracting Officer shall determine the adequacy and acceptability of the section. The Contractor shall be notified as to the acceptability of the section. If the Contracting Officer determines the demonstration section is non-compliant, the Contractor will be required to modify the methods of construction, equipment, and materials until compliance with these specifications is achieved. Upon acceptance of the demonstration section by the Contracting Officer, the demonstration section will be considered part of the new work.

3.3.3 Placement Of Riprap

All riprap shall be placed on a layer of geotextile or as shown on the plans. Only accepted stone may be placed. Prior to placement all stone shall be subject to acceptance by the Contracting Officer. The stone will be examined on a per-load basis and must meet the quality standards listed under paragraph 1.3.3.1 and the gradation requirement listed in Table A. Stone shall be placed to the lines, grades and thickness shown on the plans. Stone placement shall start at the bottom of the stone structure and extend upward to the top of the structure in a neat, orderly fashion. Placement shall be with reasonably systematic care such that segregation of particle sizes does not occur. A well-graded mass or blanket of rock is

CONFORMED

the objective. Riprap shall be placed to its full course thickness in one operation and in such manner as to avoid displacing the underlying materials. The large stones shall be well distributed. Subsequent loads of material shall be placed against previously placed material in such a manner as to ensure a relatively homogenous mass. Placing Riprap in layers will not be permitted. Placing Riprap by dumping it into chutes, or by similar methods likely to cause segregation of the various sizes, shall not be permitted. Placing Riprap by dumping it at the top of the slope and pushing it down the slope shall not be permitted. No equipment shall be operated directly on the completed stone protection layer. The desired distribution of the various sizes of stones throughout the mass shall be obtained by selective loading of the material at the quarry or by other methods of placement which will produce the specified results. Each truckload shall be representative of the gradation requirements. Rearranging of individual stones shall be required to the extent necessary to obtain a well-graded distribution of stone sizes as specified above. However, manipulating Protection Stone by means of dozers or other blade equipment shall not be permitted. The stone shall not be dropped from a height exceeding 5 feet above the previously placed material. The finished surface of the Protection Stone layer shall be adequately smooth and shall be free of mounds or windrows. The finished work shall be free of clusters of small stones and clusters of larger stones. The quantities and gradation of all materials placed shall be accurately tabulated and provided immediately to the Contracting Officer.

3.3.3.1 Construction Tolerance

The finished surface and stone layer thickness shall not deviate from the lines and grades shown by more than plus 4 inches or minus 2.5 inches from the slope lines and grades when measured with a 10-foot straightedge. Tolerances are measured perpendicular to the indicated neatlines. Extreme limits of the tolerances given shall not be continuous in any direction for more than five (5) times the nominal stone dimension nor for an area greater than 75 sq ft of the structure surface.

The intention is that the work shall be built to the required elevations, slope and grade. Outer surfaces shall be even and present a neat appearance. Placed material not meeting these limits shall be removed or reworked as directed by the Contracting Officer. Payment will not be made for excess material that the Contracting Officer permits to remain in place.

3.3.4 Quality Control Of Stone Work

The Contractor shall establish and maintain quality control for all work performed at the job site under this section to assure compliance with contract requirements. The Contractor shall maintain records of these quality control tests, inspections and corrective actions. Quality control measures shall cover all construction operations including, but not limited to, the placement of all materials to the slope and grade lines shown and in accordance with this section.

To aid in maintaining quality control, a representative reference set of stone specimens of the various sizes and applications to be used on this job shall be established by the Contractor. This reference set is to represent the minimum, maximum and median sizes for the specified stone gradations; stone weights shall be printed on the stones. This reference set shall be placed in a location adjacent to the work site in order to provide a basis for visual comparison during placement of the stone. These stones shall be used as the last order of work.

CONFORMED

Any and all stone materials delivered to the construction site shall meet all the stone acceptance requirements herein. During the contract period, both prior to and after materials are delivered to the construction site, visual inspections and measurements of the stone materials may be performed by the Contracting Officer in the interests of quality assurance. If the Contracting Officer, during the inspections, finds that the stone quality or gradation being furnished are not as specified or are questionable, re-sampling and / or re-testing by the Contractor shall be required. The additional tests shall be performed on random loads as selected by the Contracting Officer, or on in-place materials at the locations directed by the Contracting Officer. The Contracting Officer may direct this testing under the Contract Clause, INSPECTION OF CONSTRUCTION.

3.3.4.1 Gradation Tests For Quality Control

The frequency and type of recurring gradation tests for Protection Stone is listed in paragraph 1.3.3.1, "Gradation of Riprap". In-place gradation tests would be called for by the Contracting Officer only if gradation of placed Protection Stone becomes suspect.

If in-place gradation tests, or other tests on placed materials, are called for by the Contracting Officer, the methods to be used to conduct these tests are as follows. The in-place test area shall include the full thickness of the placed Protection Stone layer, without disturbing or including the underlying material, and shall be of a large enough area to generate a suitable gradation sample size as required for the specified gradation test (ASTM D5519, Test Method A (size-mass grading)). Each pit excavated for an in-place test sample shall be refilled and reworked to provide a surface devoid of signs of disturbance. For these tests, the Contractor shall provide all necessary screens, scales and other equipment, and operating personnel, and shall grade the sample. Weighing and measuring equipment shall meet requirements as per NIST HB 44. If the material fails a gradation test, additional gradation tests will be required at the Contractor's expense to delineate the limits of unacceptable stone. Stone failing the gradation test shall either be reworked to bring the stone within the specified gradation or the stone shall be removed from the project site as determined by the Contracting Officer. Any material rejected shall be removed or disposed of as specified and at the Contractor's expense. Responsibilities for the sampling and testing costs and reporting related to this quality control sampling are detailed in paragraph 1.3.5. If material underlying the Protection Stone is disturbed by the testing, it shall be repaired at the Contractor's expense.

3.3.4.2 Other In-Place Tests

In-place sampling for laboratory stone acceptance tests (as per paragraph 1.3.3.1) is unlikely. If any such tests were to be ordered by the Contracting Officer, they shall be done under the guidelines set forth in paragraphs 1.3.2 and 1.3.3.1, "In the event that laboratory testing is needed". Responsibilities for the sampling and testing costs and reporting related to this quality control sampling are detailed in paragraph 1.3.5.

3.3.4.3 Rejected Stone

Any and all stone which does not meet the specifications herein shall be considered rejected and shall be removed from the job site at the Contractor's expense.

CONFORMED

3.3.4.4 Debris

Any and all debris brought onto or produced at the construction site in the process of providing and placing protection stone, including, but not limited to unsatisfactory stone materials and non-stone debris, shall be removed by the Contractor except as otherwise directed by the Contracting Officer, and upon removal shall become the property of the Contractor. All materials shall be properly disposed of in accordance with Federal, State and applicable local requirements.

Stone containing unacceptable quantities of fine materials, such as soil or sand, shall be screened in some manner prior to being shipped to the job site, in order to remove the fine material.

3.3.4.5 Quarry Operations

Quarry operations shall be conducted by the Contractor in a manner that shall produce stone conforming to the requirements specified and may involve selective quarrying, handling, processing, blending, and loading as necessary.

3.3.5 Waybills and Delivery Tickets for Truck Transport

Copies of waybills or delivery tickets shall be submitted to the Contracting Officer. The Contractor shall furnish the certified weight scale tickets for each load of material weighed; these tickets shall include tare weight, identification mark of each vehicle weighed, date, time, and location of the loading. A master log of all vehicle loading(s) shall be furnished for each day of loading operation. Prior to the final payment, the Contractor shall furnish written certification that the material recorded on the submitted waybills and/or certified tickets actually was used in the construction covered by the contract. Submit Weigh Scale Certification, by a copy of the certification from the regulation agency, attesting to the scale's accuracy and a copy of each certified weight scale ticket after 10 working days after weighing.

3.4 GROUTING OF STONE PROTECTION

Placement of grout shall be as specified in paragraph PRODUCING, CONVEYING AND PLACING OF GROUT.

3.4.1 Producing, Conveying and Placing of Grout

3.4.1.1 Producing Grout

The batching and mixing equipment shall provide sufficient capacity to prevent cold joints. Materials shall be stockpiled and batched by methods that will prevent segregation or contamination of aggregates and insure accurate proportioning of the ingredients of the mixture. No mixing water in excess of the amount required by the job mix shall be added to the grout mixture during mixing, hauling, or after arrival at the delivery point.

a. Ready-Mixed Concrete Grout shall conform to ASTM C94/C94M except as otherwise specified.

b. Volumetric Batching and Continuous Mixing shall conform to ASTM C685/C685M.

CONFORMED

c. Onsite Batching and Mixing. The Contractor has the option of using an onsite batching and mixing facility. The facility shall provide sufficient capacity to prevent cold joints and be able to batch the cement and aggregate by weight, and the water and admixtures by weight or volume. The method of measuring materials, the batching operation, and the mixer shall be approved in accordance with paragraph SUBMITTALS. On-site plant shall conform to the requirements of either ASTM C94/C94M or ASTM C685/C685M.

3.4.1.2 Preparation for Placing

The rock shall be flushed with water to remove the fines from the rock prior to placing the grout. The rock shall be kept moist just ahead of the actual placing, but no flowing or standing water shall be present during the grout operation. Snow and ice shall be removed. All equipment needed to place, protect, and cure the grout shall be at the placement site and in good operating condition. The entire preparation shall be accepted by the Contracting Office prior to placing the grout.

3.4.1.3 Conveying and Placing

Grout placement will not be permitted when weather conditions prevent proper placement, except upon approval. Submit the methods and equipment for transporting, handling, depositing, and consolidating the grout prior to first grout placement. The grout mixture shall not be placed until the stone protection has been inspected and approved. Grout shall be in place within 15 minutes after discharge from the mixer. Grout shall not be dropped more than 5 feet vertically unless suitable equipment is used to prevent segregation.

a. Conveying

When the grout is mixed and transported by a truck mixer, the grout shall be delivered to the site of the work and discharge shall be completed within 1-1/2 hours after introduction of the cement to the aggregate and water. When the air temperature is 85 degrees F or greater) or under conditions contributing to quick stiffening of the grout, the time between the introduction of the cement and discharge of the grout shall not exceed 45 minutes. The Contracting Officer may allow a longer time, provided the setting time of the grout is increased a corresponding amount by the addition of an approved set-retarding admixture. Grout shall be deposited as close as possible to its final position by methods that will prevent segregation of the aggregates or loss of mortar.

b. Placing

The riprap shall be kept moist just ahead of the actual grout placement, but the grout shall not be placed in standing or flowing water. Grout placed on inverts or other nearly level areas may be placed in one course. On slopes, the grout shall be placed in two (2) courses in successive lateral strips approximately 10 feet in width starting at the toe of the slope and progressing to the top. The grout shall be delivered to the place of final deposit and discharged directly on the surface of the riprap, using a splash plate of metal or wood to prevent displacement of the rock directly under the discharge. The flow of grout shall be directed with brooms, spades or baffles to prevent it from flowing excessively along the same path and to assure that all intermittent spaces are filled. Sufficient barring shall be

CONFORMED

done to loosen tight pockets of riprap and otherwise aid the penetration of grout so that all voids shall be filled and the grout fully penetrates the riprap. All brooming on slopes shall be uphill and after the grout has stiffened, the entire surface shall be rebroomed to eliminate runs, to fill voids caused by sloughing, and to remove grout from the top surface and pockets or depressions of the upper stones.

3.4.1.4 Cold-Weather Requirements

No grout placement shall be made when the ambient temperature is below 35 degrees F, nor if the ambient temperature is below 40 degrees F and falling. Suitable covering and other means, as approved, shall be provided for maintaining the grout at a temperature of at least 50 degrees F for not less than 72 hours after placing and at a temperature above freezing for the remainder of the curing period. When freezing conditions prevail, riprap to be grouted must be covered and heated to a range of 40 to 60 degrees F for at least 24 hours prior to placing the grout. Salt, chemicals, or other foreign materials shall not be mixed with the grout to prevent freezing. Any grout damaged by freezing shall be removed and replaced at the expense of the Contractor.

3.4.1.5 Hot Weather Requirements

When the rate of evaporation of surface moisture, as determined by use of Figure 2.1.5 of ACI 305R, is expected to exceed 0.2 pounds per square foot per hour, provisions for windbreaks, shading, fog spraying, or wet covering with a light-colored material shall be made in advance of placement, and such protective measures shall be taken as quickly as finishing operations will allow.

3.4.2 Curing and Protection of Grouted Stone Protection

Beginning immediately after placement and continuing for at least 7 days, all grout shall be cured and protected from premature drying, extremes in temperature, rapid temperature change, freezing, mechanical damage, and exposure to rain or flowing water. All materials and equipment needed for adequate curing and protection shall be available and at the site of the placement prior to the start of grout placement. After completion of any strip or panel, no workman or other load shall be permitted on the grouted surface for a period of twenty-four (24) hours. Exposed surfaces shall be kept continuously moist for the entire period, or until curing compound is applied. Preservation of moisture for grout surfaces shall be accomplished by one of the following methods:

a. Continuous sprinkling and ponding.

b. Application of absorptive mats or fabrics kept continuously wet.

c. Application of sand kept continuously wet.

d. Application of impervious sheet material conforming to ASTM C171.

e. Application of membrane-forming curing compound conforming to ASTM C309. The compound shall be sprayed on the moist surface as soon as free water has disappeared, but shall not be applied to any surface until finishing of that surface is completed. The compound shall be applied at a uniform rate of not less than 1 gallon per 150 square feet of surface and shall form a continuous adherent membrane over the entire

CONFORMED

surface. Curing compound shall not be applied to surfaces requiring bond to subsequently placed grout. If the membrane is damaged during the curing period, the damaged area shall be resprayed at the rate of application specified above.

-- End of Section --

CONFORMED

Appendix

Title	Appendix
Engineering Form 4025R - Transmittal of Shop Drawings	A
Submittal Register	B
Archeological Monitoring Plan	C
EP-310-1-6a Construction Project Signs	D
Groundwater Management Plan	E
UPRR Standard Drawings	F
Historical Geotechnical Borings	G
As-Built Plans - Los Coches Street Bridge	H
As-Built Plans - Ames Avenue and Yosemite Drive Bridges	I
Channel Improvements – Construction and Maintenance Agreement	J
County of Santa Clara Encroachment Permit	K
Public Entities Indemnification and INSURANCE- CONTRACTOR-Construction Risk	L

CONFORMED

Appendix A

Engineering Form 4025R
Transmittal of Shop Drawings

CONFORMED

TRANSMITTAL OF SHOP DRAWINGS, EQUIPMENT DATA, MATERIAL SAMPLES, OR MANUFACTURER'S CERTIFICATES OF COMPLIANCE

For use of this form, see ER 415-1-10; the proponent agency is CECW-CE.

DATE	TRANSMITTAL NO.

SECTION I - REQUEST FOR APPROVAL OF THE FOLLOWING ITEMS (*This section will be initiated by the contractor*)

TO:	FROM:	CONTRACT NO.	CHECK ONE: ☐ THIS IS A NEW TRANSMITTAL ☐ THIS IS A RESUBMITTAL OF TRANSMITTAL _____

SPECIFICATION SEC. NO. (*Cover only one section with each transmittal*)	PROJECT TITLE AND LOCATION	THIS TRANSMITTAL IS FOR: (*Check one*) ☐ FIO ☐ GA ☐ DA ☐ CR ☐ DA/CR ☐ DA/GA

ITEM NO. (*See Note 3*) a.	DESCRIPTION OF SUBMITTAL ITEM (*Type size, model number/etc.*) b.	SUBMITTAL TYPE CODE (*See Note 8*) c.	NO. OF COPIES d.	CONTRACT DOCUMENT REFERENCE: SPEC. PARA. NO. e.	CONTRACT DOCUMENT REFERENCE: DRAWING SHEET NO. f.	CONTRACTOR REVIEW CODE g.	VARIATION Enter "Y" if requesting a variation (*See Note 6*) h.	USACE ACTION CODE (*Note 9*) i.

REMARKS	I certify that the above submitted items had been reviewed in detail and are correct and in strict conformance with the contract drawings and specifications except as otherwise stated.	
	NAME OF CONTRACTOR	SIGNATURE OF CONTRACTOR

SECTION II - APPROVAL ACTION

ENCLOSURES RETURNED (*List by item No.*)	NAME AND TITLE OF APPROVING AUTHORITY	SIGNATURE OF APPROVING AUTHORITY	DATE

CONFORMED

INSTRUCTIONS

1. Section I will be initiated by the Contractor in the required number of copies.

2. Each Transmittal shall be numbered consecutively. The Transmittal Number typically includes two parts separated by a dash (-). The first part is the specification section number. The second part is a sequential number for the submittals under that spec section. If the Transmittal is a resubmittal, then add a decimal point to the end of the original Transmittal Number and begin numbering the resubmittal packages sequentially after the decimal.

3. The "Item No." for each entry on this form will be the same "Item No." as indicated on ENG FORM 4288-R.

4. Submittals requiring expeditious handling will be submitted on a separate ENG Form 4025-R.

5. Items transmitted on each transmittal form will be from the same specification section. Do not combine submittal information from different specification sections in a single transmittal.

6. If the data submitted are intentionally in variance with the contract requirements, indicate a variation in column h, and enter a statement in the Remarks block describing he detailed reason for the variation.

7. ENG Form 4025-R is self-transmitting - a letter of transmittal is not required.

8. When submittal items are transmitted, indicate the "Submittal Type" (*SD-01 through SD-11*) in column c of Section I.
   Submittal types are the following:
   SD-01 - Preconstruction SD-02 - Shop Drawings SD-03 - Product Data SD-04 - Samples SD-05 - Design Data SD-06 - Test Reports
   SD-07 - Certificates SD-08 - Manufacturer's Instructions SD-09 - Manufacturer's Field Reports SD-10 - O&M Data SD-11 - Closeout

9. For each submittal item, the Contractor will assign Submittal Action Codes in column g of Section I. The U.S. Army Corps of Engineers approving authority will assign Submittal Action Codes in column i of Section I. The Submittal Action Codes are:

   A -- Approved as submitted.
   B -- Approved, except as noted on drawings. Resubmission not required.
   C -- Approved, except as noted on drawings. Refer to attached comments. Resubmission required.
   D -- Will be returned by separate correspondence.
   E -- Disapproved. Refer to attached comments.
   F -- Receipt acknowledged.
   X -- Receipt acknowledged, does not comply with contract requirements, as noted.
   G -- Other action required *(Specify)*
   K -- Government concurs with intermediate design. (*For D-B contracts*)
   R -- Design submittal is acceptable for release for construction. (*For D-B contracts*)

10. Approval of items does not relieve the contractor from complying with all the requirements of the contract.

CONFORMED

Appendix B

Submittal Register

CONFORMED

SUBMITTAL REGISTER

CONTRACT NO.

TITLE AND LOCATION
Upper Berryessa Creek

CONTRACTOR

ACTIVITY NO	TRANSMITTAL NO	SPEC SECT	DESCRIPTION ITEM SUBMITTED	PARAGRAPH #	CLASSIFICATION	GOVT OR A/E REVWR	CONTRACTOR: SCHEDULE DATES			CONTRACTOR ACTION			APPROVING AUTHORITY				MAILED TO CONTR/ DATE RCD FRM APPR AUTH
							SUBMIT	APPROVAL NEEDED BY	MATERIAL NEEDED BY	ACTION CODE	DATE OF ACTION	DATE FWD TO APPR AUTH/ DATE RCD FROM CONTR	DATE FWD TO OTHER REVIEWER	DATE RCD FROM OTH REVIEWER	ACTION CODE	DATE OF ACTION	
(a)	(b)	(c)	(d)	(e)	(f)		(g)	(h)	(i)	(j)	(k)	(l)	(m)	(n)	(o)	(p)	(q)
		01 14 00	SD-01 Preconstruction Submittals														
			List of Contact Personnel	1.2.1.1	G												
		01 16 00	SD-01 Preconstruction Submittals														
			Work Notification;	1.11.3	G												
		01 32 01.00 10	SD-01 Preconstruction Submittals														
			Project Scheduler Qualifications	1.3	G												
			Preliminary Project Schedule	3.4.1	G												
			Initial Project Schedule	3.4.2	G												
			Periodic Schedule Update	3.6.2	G												
		01 33 00	SD-01 Preconstruction Submittals														
			Submittal Register	1.7	G												
		01 35 26	SD-01 Preconstruction Submittals														
			Accident Prevention Plan (APP)	1.6	G												
			Activity Hazard Analysis (AHA)	1.7	G												
			SD-06 Test Reports														
			Notifications and Reports	1.11													
			Accident Reports	1.11.2	G												
			SD-07 Certificates														
			Confined Space Entry Permit	1.8													
			Hot work permit	1.8													
		01 45 00.00 10	SD-01 Preconstruction Submittals														
			Contractor Quality Control (CQC)	3.2	G												
			Plan														
		01 50 00	SD-01 Preconstruction Submittals														

CONTROLLED

SUBMITTAL REGISTER

CONTRACT NO.

TITLE AND LOCATION
Upper Berryessa Creek

CONTRACTOR

ACTIVITY NO	TRANSMITTAL NO	SPEC SECT	DESCRIPTION ITEM SUBMITTED	PARAGRAPH #	CLASSIFICATION	GOVT OR A/E REVWR	CONTRACTOR: SCHEDULE DATES			CONTRACTOR ACTION			APPROVING AUTHORITY				MAILED TO CONTR/ DATE RCD FRM APPR AUTH
							SUBMIT	APPROVAL NEEDED BY	MATERIAL NEEDED BY	ACTION CODE	DATE OF ACTION	DATE FWD TO APPR AUTH/ DATE RCD FROM CONTR	DATE FWD TO OTHER REVIEWER	DATE RCD FROM OTH REVIEWER	ACTION CODE	DATE OF ACTION	
(a)	(b)	(c)	(d)	(e)	(f)		(g)	(h)	(i)	(j)	(k)	(l)	(m)	(n)	(o)	(p)	(q)
		01 57 19	SD-01 Preconstruction Submittals														
			Preconstruction Survey	1.5.1	G												
			Solid Waste Management Permit	1.9	G												
			Regulatory Notifications	1.5.2	G												
			Environmental Protection Plan	1.6	G												
			Stormwater Notice of Intent	3.2.1.2	G												
			Dirt and Dust Control Plan	1.6.9.1	G												
			Employee Training Records	1.5.4	G												
			SD-06 Test Reports														
			Laboratory Analysis	1.6.6													
			Inspection Reports	3.2.1.3													
			Solid Waste Management Report	3.7.2.1	G												
			SD-07 Certificates														
			Employee Training Records	1.5.4	G												
			Erosion and Sediment Control	1.5.4													
			Inspector Qualifications														
			SD-11 Closeout Submittals														
			Stormwater Pollution Prevention	3.2.1.4	G												
			Plan Compliance Notebook														
			Stormwater Notice of Termination	3.2.1.5	G												
			Environmental Records Binder	1.8	G												
			Waste Determination	3.7.1	G												
			Documentation														
			Disposal Documentation for	3.7.3.6	G												

SUPERVISOR

SUBMITTAL REGISTER

CONTRACT NO.

TITLE AND LOCATION
Upper Berryessa Creek

CONTRACTOR

ACTIVITY NO	TRANSMITTAL NO	SPEC SECT	DESCRIPTION ITEM SUBMITTED	PARAGRAPH #	CLASSIFICATION	GOVT OR A/E REVWR	CONTRACTOR: SCHEDULE DATES			CONTRACTOR ACTION			APPROVING AUTHORITY				MAILED TO CONTR/ DATE RCD FRM APPR AUTH
							SUBMIT	APPROVAL NEEDED BY	MATERIAL NEEDED BY	ACTION CODE	DATE OF ACTION	DATE FWD TO APPR AUTH/ DATE RCD FROM CONTR	DATE FWD TO OTHER REVIEWER	DATE RCD FROM OTH REVIEWER	ACTION CODE	DATE OF ACTION	
(a)	(b)	(c)	(d)	(e)	(f)		(g)	(h)	(i)	(j)	(k)	(l)	(m)	(n)	(o)	(p)	(q)
		01 57 19	Assembled Employee Training Records	1.5.4	G												
			Solid Waste Management Permit	1.9	G												
			Solid Waste Management Report	3.7.2.1	G												
			Hazardous Waste/Debris Management	3.7.3.1	G												
			Regulatory Notifications	1.5.2	G												
			Sales Documentation	3.7.2.1	G												
			Contractor Certification	3.7.2.1													
		01 57 20.00 10	SD-01 Preconstruction Submittals														
			Environmental Protection Plan	1.9	G												
			Nesting Bird Surveys	3.10.1	G												
			Transportation Management Plan	3.6	G												
			Rain Event Action Plan	1.8	G												
			SD-06 Test Reports														
			Trees Monitoring Report	3.3.4	G												
		01 57 23	SD-01 Preconstruction Submittals														
			Storm Water Pollution Prevention Plan	1.3.2													
			Storm Water Notice of Intent	1.3.2													
			SD-06 Test Reports														
			Storm Water Inspection Reports for General Permit	1.3.2													
			Erosion and Sediment Controls	1.3													

CONTROLLED

SUBMITTAL REGISTER

CONTRACT NO.

TITLE AND LOCATION
Upper Berryessa Creek

CONTRACTOR

ACTIVITY NO	TRANSMITTAL NO	SPEC SECT	DESCRIPTION ITEM SUBMITTED	PARAGRAPH #	CLASSIFICATION	GOVT OR A/E REVWR	CONTRACTOR: SCHEDULE DATES			CONTRACTOR ACTION			APPROVING AUTHORITY				MAILED TO CONTR/ DATE RCD FRM APPR AUTH
							SUBMIT	APPROVAL NEEDED BY	MATERIAL NEEDED BY	ACTION CODE	DATE OF ACTION	DATE FWD TO APPR AUTH/ DATE RCD FROM CONTR	DATE FWD TO OTHER REVIEWER	DATE RCD FROM OTH REVIEWER	ACTION CODE	DATE OF ACTION	
(a)	(b)	(c)	(d)	(e)	(f)		(g)	(h)	(i)	(j)	(k)	(l)	(m)	(n)	(o)	(p)	(q)
		01 58 00	SD-02 Shop Drawings														
			Sign Legend Orders	1.3.1	G												
		01 78 00	SD-01 Preconstruction Submittals														
			Warranty Management Plan	1.3.1	G												
			SD-11 Closeout Submittals														
			Record Drawings	1.2.1	G												
			Operation and Maintenance	1.4	G												
			Manuals														
		02 22 13	SD-01 Preconstruction Submittals														
			Vibration Control Specialist	1.2.1	G												
			Vibration Control Specialist	1.2.1	G												
			Alternate														
			Vibration Monitoring Technician	1.2.2	G												
			Structural Inspection/Evaluation	1.2.3	G												
			Engineer														
			Vibration Control Plan	3.3	G												
			SD-06 Test Reports														
			Vibration Monitoring Report	3.5	G												
			Daily Instrument Logs	3.4	G												
			Post-Construction Structural	3.6	G												
			Survey														
		02 41 00	SD-01 Preconstruction Submittals														
			Demolition Plan	1.2.2	G												
			Existing Conditions	1.9													

CONTRACTOR

SUBMITTAL REGISTER

CONTRACT NO.

TITLE AND LOCATION
Upper Berryessa Creek

CONTRACTOR

ACTIVITY NO	TRANSMITTAL NO	SPEC SECT	DESCRIPTION ITEM SUBMITTED	PARAGRAPH #	CLASSIFICATION	GOVT OR A/E REVWR	CONTRACTOR: SCHEDULE DATES			CONTRACTOR ACTION			APPROVING AUTHORITY				MAILED TO CONTR/ DATE RCD FRM APPR AUTH
							SUBMIT	APPROVAL NEEDED BY	MATERIAL NEEDED BY	ACTION CODE	DATE OF ACTION	DATE FWD TO APPR AUTH/ DATE RCD FROM CONTR	DATE FWD TO OTHER REVIEWER	DATE RCD FROM OTH REVIEWER	ACTION CODE	DATE OF ACTION	
(a)	(b)	(c)	(d)	(e)	(f)		(g)	(h)	(i)	(j)	(k)	(l)	(m)	(n)	(o)	(p)	(q)
		03 11 13.00 10	SD-02 Shop Drawings														
			Formwork	2.2.1	G												
			Formwork	3.1.1	G												
			Form Removal Schedule	2.2.1	G												
			SD-03 Product Data														
			Form Materials	2.2													
			SD-04 Samples														
			Sample Panels	1.3	G												
			Fiber Voids	2.2.2	G												
			SD-05 Design Data														
			Calculations	2.1													
			SD-06 Test Reports														
			Inspection	3.2													
			SD-07 Certificates														
			Fiber Voids	2.2.2													
		03 15 00.00 10	SD-02 Shop Drawings														
			Waterstops	2.4	G												
			SD-03 Product Data														
			Preformed Expansion Joint Filler	2.2													
			Sealant	2.3													
			Waterstops	2.4													
			SD-04 Samples														
			Lubricant for Preformed	2.3.2													
			Compression Seals														

CONTROLLED

SUBMITTAL REGISTER

CONTRACT NO.

TITLE AND LOCATION
Upper Berryessa Creek

CONTRACTOR

ACTIVITY NO	TRANSMITTAL NO	SPEC SECT	DESCRIPTION ITEM SUBMITTED	PARAGRAPH #	CLASSIFICATION	GOVT OR A/E REVWR	CONTRACTOR: SCHEDULE DATES			CONTRACTOR ACTION			APPROVING AUTHORITY				MAILED TO CONTR/ DATE RCD FRM APPR AUTH
							SUBMIT	APPROVAL NEEDED BY	MATERIAL NEEDED BY	ACTION CODE	DATE OF ACTION	DATE FWD TO APPR AUTH/ DATE RCD FROM CONTR	DATE FWD TO OTHER REVIEWER	DATE RCD FROM OTH REVIEWER	ACTION CODE	DATE OF ACTION	
(a)	(b)	(c)	(d)	(e)	(f)		(g)	(h)	(i)	(j)	(k)	(l)	(m)	(n)	(o)	(p)	(q)
		03 15 00.00 10	Splicing Waterstops	2.5.2	G												
			SD-07 Certificates														
			Preformed Expansion Joint Filler	2.2													
			Sealant	2.3													
			Waterstops	2.4													
		03 20 00.00 10	SD-01 Preconstruction Submittals														
			Butt-Splices	3.1.3.2	G												
			SD-02 Shop Drawings														
			Reinforcement	3.1	G												
			SD-03 Product Data														
			Mechanical Butt-Splices	2.3.3	G												
			Reinforcing Steel	2.3	G												
			SD-04 Samples														
			Epoxy-Coated Bars	2.3.2													
			SD-06 Test Reports														
			Tests, Inspections, and	2.8	G												
			Verifications														
			SD-07 Certificates														
			Reinforcing Steel	2.3													
			Qualified Welders	1.3.1													
			Qualification of Steel Bar	1.3.2													
			Butt-Splicers														
		03 31 01.00 10	SD-02 Shop Drawings														
			Reinforcing steel	2.1.5	G												

SUBMITTAL REGISTER

CONTRACT NO.

TITLE AND LOCATION
Upper Berryessa Creek

CONTRACTOR

ACTIVITY NO	TRANSMITTAL NO	SPEC SECT	DESCRIPTION ITEM SUBMITTED	PARAGRAPH #	CLASSIFICATION	GOVT OR A/E REVWR	CONTRACTOR: SCHEDULE DATES			CONTRACTOR ACTION			APPROVING AUTHORITY				MAILED TO CONTR/ DATE RCD FRM APPR AUTH
							SUBMIT	APPROVAL NEEDED BY	MATERIAL NEEDED BY	ACTION CODE	DATE OF ACTION	DATE FWD TO APPR AUTH/ DATE RCD FROM CONTR	DATE FWD TO OTHER REVIEWER	DATE RCD FROM OTH REVIEWER	ACTION CODE	DATE OF ACTION	
(a)	(b)	(c)	(d)	(e)	(f)		(g)	(h)	(i)	(j)	(k)	(l)	(m)	(n)	(o)	(p)	(q)
		03 31 01.00 10	Construction Joint Treatment	3.1.4	G												
			Cold-Weather Requirements	3.2.1	G												
			Hot-Weather Requirements	3.2.2	G												
			Cementitious Materials,	1.4.2	G												
			Admixtures, and Curing														
			Compound														
			Nonshrink Grout	2.1.6													
			Mechanical Reinforcing Bar	2.1.5													
			Connectors														
			SD-06 Test Reports														
			Aggregates	2.1.2	G												
			Mill Test Reports	2.1													
			Tests and Inspections	3.3													
			Water	2.1.4													
			SD-07 Certificates														
			Concrete Field Testing	1.4													
			Technicians														
			Concrete Construction Inspector	1.4													
			(CCI)														
			Cementitious Materials	2.1.1													
			Blended Hydraulic Cement	2.1.1.6													
			SD-08 Manufacturer's Instructions														
			Curing Compound	1.4.2													
		03 35 00.00 10	SD-03 Product Data														

CONTROLLED

SUBMITTAL REGISTER

CONTRACT NO.

TITLE AND LOCATION
Upper Berryessa Creek

CONTRACTOR

ACTIVITY NO	TRANSMITTAL NO	SPEC SECT	DESCRIPTION ITEM SUBMITTED	PARAGRAPH #	CLASSIFICATION	GOVT OR A/E REVWR	CONTRACTOR: SCHEDULE DATES			CONTRACTOR ACTION			APPROVING AUTHORITY				MAILED TO CONTR/ DATE RCD FRM APPR AUTH
							SUBMIT	APPROVAL NEEDED BY	MATERIAL NEEDED BY	ACTION CODE	DATE OF ACTION	DATE FWD TO APPR AUTH/ DATE RCD FROM CONTR	DATE FWD TO OTHER REVIEWER	DATE RCD FROM OTH REVIEWER	ACTION CODE	DATE OF ACTION	
(a)	(b)	(c)	(d)	(e)	(f)		(g)	(h)	(i)	(j)	(k)	(l)	(m)	(n)	(o)	(p)	(q)
		03 39 00.00 10	SD-03 Product Data														
			Curing Materials	2.1													
			SD-06 Test Reports														
			Testing and Inspection for CQC	3.2													
			SD-08 Manufacturer's Instructions														
			Curing Compound	2.1													
		03 40 00.00 10	SD-01 Preconstruction Submittals														
			Quality Control Procedures	1.3.2.2													
			SD-02 Shop Drawings														
			Standard Precast Units	2.1.1	G												
			Custom-Made Precast Units	2.1.2	G												
			SD-03 Product Data														
			Standard Precast Units	2.1.1													
			Proprietary Precast Units	2.1.3													
			Embedded Items	3.1.3													
			Accessories	2.2.11													
			SD-05 Design Data														
			Design Calculations	2.1.2													
			Concrete Mix Proportions	2.1.5.1													
			SD-06 Test Reports														
			Test Reports	1.3.2.4													
			SD-07 Certificates														
			Quality Control Procedures	1.3.2.2													
		31 00 00	SD-01 Preconstruction Submittals														

CONTROLLED

SUBMITTAL REGISTER

CONTRACT NO.

TITLE AND LOCATION
Upper Berryessa Creek

CONTRACTOR

ACTIVITY NO	TRANSMITTAL NO	SPEC SECT	DESCRIPTION ITEM SUBMITTED	PARAGRAPH #	CLASSIFICATION	GOVT OR A/E REVWR	CONTRACTOR: SCHEDULE DATES			CONTRACTOR ACTION			APPROVING AUTHORITY				MAILED TO CONTR/	
							SUBMIT	APPROVAL NEEDED BY	MATERIAL NEEDED BY	ACTION CODE	DATE OF ACTION	DATE FWD TO APPR AUTH/ DATE RCD FROM CONTR	DATE FWD TO OTHER REVIEWER	DATE RCD FROM OTH REVIEWER	ACTION CODE	DATE OF ACTION	DATE RCD FRM APPR AUTH	
(a)	(b)	(c)	(d)	(e)	(f)		(g)	(h)	(i)	(j)	(k)	(l)	(m)	(n)	(o)	(p)	(q)	
		31 00 00	Dewatering Plan	1.5.2	G													
			Dewatering Plan	1.5.2	G													
			Groundwater Management Plan	1.5.3	G													
			SD-03 Product Data															
			Utilization of Excavated Materials	3.8	G													
			SD-06 Test Reports															
			Soil Testing Logs	3.14	G													
			Borrow Site Testing	2.1	G													
			Select Granular Material	1.4.6	G													
			SD-07 Certificates															
			Testing Laboratory	3.14	G													
		31 05 19	SD-03 Product Data															
			Thread	2.1.2														
			Manufacturing Quality Control	2.2														
			Sampling and Testing															
			SD-04 Samples															
			Quality Assurance Samples and	3.1														
			Tests															
			SD-07 Certificates															
			Geotextile	2.1.1														
		31 11 00	SD-03 Product Data															
			Nonsaleable Materials	3.6.2	G													
			SD-04 Samples															
			Tree wound paint	2.1														

CONTROLLED

SUBMITTAL REGISTER

CONTRACT NO.

TITLE AND LOCATION
Upper Berryessa Creek

CONTRACTOR

ACTIVITY NO	TRANSMITTAL NO	SPEC SECT	DESCRIPTION ITEM SUBMITTED	PARAGRAPH #	CLASSIFICATION	GOVT OR A/E REVWR	CONTRACTOR: SCHEDULE DATES			CONTRACTOR ACTION			APPROVING AUTHORITY				MAILED TO CONTR/ DATE RCD FRM APPR AUTH
							SUBMIT	APPROVAL NEEDED BY	MATERIAL NEEDED BY	ACTION CODE	DATE OF ACTION	DATE FWD TO APPR AUTH/ DATE RCD FROM CONTR	DATE FWD TO OTHER REVIEWER	DATE RCD FROM OTH REVIEWER	ACTION CODE	DATE OF ACTION	
(a)	(b)	(c)	(d)	(e)	(f)		(g)	(h)	(i)	(j)	(k)	(l)	(m)	(n)	(o)	(p)	(q)
		31 32 11	Layout	3.2.2	G												
			Obstructions Below Ground	3.2.4	G												
			Maintenance Record	3.6													
			SD-03 Product Data														
			Erosion Control Blankets Type XII	2.1.1													
			Equipment	1.1													
			Finished Grade	3.1.1													
			SD-04 Samples														
			Erosion control blankets	2.1													
			SD-06 Test Reports														
			Erosion Control Blankets	2.1													
			SD-07 Certificates														
			Installer's Qualification	1.4.1													
			SD-10 Operation and Maintenance Data														
			Maintenance Instructions	3.6.2													
			SD-11 Closeout Submittals														
			Erosion Control Blankets Type XII	2.1.1													
		32 11 23	SD-03 Product Data														
			Plant, Equipment, and Tools	2.1													
			Waybills and Delivery Tickets	1.4.5													
			SD-06 Test Reports														

CONTROLLED

SUBMITTAL REGISTER

CONTRACT NO.

TITLE AND LOCATION
Upper Berryessa Creek

CONTRACTOR

ACTIVITY NO	TRANSMITTAL NO	SPEC SECT	DESCRIPTION ITEM SUBMITTED	PARAGRAPH #	CLASSIFICATION	GOVT OR A/E REVWR	CONTRACTOR: SCHEDULE DATES			CONTRACTOR ACTION			APPROVING AUTHORITY				MAILED TO CONTR/ DATE RCD FRM APPR AUTH
							SUBMIT	APPROVAL NEEDED BY	MATERIAL NEEDED BY	ACTION CODE	DATE OF ACTION	DATE FWD TO APPR AUTH/ DATE RCD FROM CONTR	DATE FWD TO OTHER REVIEWER	DATE RCD FROM OTH REVIEWER	ACTION CODE	DATE OF ACTION	
(a)	(b)	(c)	(d)	(e)	(f)		(g)	(h)	(i)	(j)	(k)	(l)	(m)	(n)	(o)	(p)	(q)
		32 31 13	SD-02 Shop Drawings														
			Fence Assembly	1.3	G												
			Location of Gate, Corner, End,	3.16.1	G												
			and Pull Posts														
			Gate Assembly	1.3	G												
			Gate Hardware and Accessories	2.17	G												
			Erection/Installation Drawings	1.3													
			SD-03 Product Data														
			Fence Assembly	1.3	G												
			Gate Assembly	1.3	G												
			Gate Hardware and Accessories	2.17													
			PVC Coating	1.5.1	G												
			Zinc Coating	2.2	G												
			Concrete	2.20	G												
			SD-04 Samples														
			Fabric	2.3	G												
			Braces	2.19													
			Line Posts	2.5													
			Sleeves	2.7													
			Top Rail	2.8													
			Tension Wire	2.11													
			Stretcher Bars	2.12													
			Gate Posts	2.15													
			Gate Hardware and Accessories	2.17													

CONTROLLED

SUBMITTAL REGISTER

CONTRACT NO.

TITLE AND LOCATION
Upper Berryessa Creek

CONTRACTOR

ACTIVITY NO	TRANSMITTAL NO	SPEC SECT	DESCRIPTION ITEM SUBMITTED	PARAGRAPH #	CLASSIFICATION	GOVT OR A/E REVWR	CONTRACTOR: SCHEDULE DATES			CONTRACTOR ACTION			APPROVING AUTHORITY				MAILED TO CONTR/ DATE RCD FRM APPR AUTH
							SUBMIT	APPROVAL NEEDED BY	MATERIAL NEEDED BY	ACTION CODE	DATE OF ACTION	DATE FWD TO APPR AUTH/ DATE RCD FROM CONTR	DATE FWD TO OTHER REVIEWER	DATE RCD FROM OTH REVIEWER	ACTION CODE	DATE OF ACTION	
(a)	(b)	(c)	(d)	(e)	(f)		(g)	(h)	(i)	(j)	(k)	(l)	(m)	(n)	(o)	(p)	(q)
		32 31 13	SD-07 Certificates														
			Certificates of Compliance	1.5.2													
			SD-08 Manufacturer's Instructions														
			Fence Assembly	1.3													
			Gate Assembly	1.3													
			Hardware Assembly	1.3													
			Accessories	1.3													
		32 92 19	SD-03 Product Data														
			Wood cellulose fiber mulch	2.3.3													
			Fertilizer	2.2													
			SD-07 Certificates														
			seed	2.1													
			SD-08 Manufacturer's Instructions														
			Erosion Control Materials	2.5													
		33 40 00	SD-03 Product Data														
			Placing Pipe	3.3													
			Flpa Gate Check Valves		G												
			SD-04 Samples														
			Pipe for Culverts and Storm	2.1													
			Drains														
			SD-07 Certificates														
			Resin Certification	2.1.2													
			Determination of Density	3.7.5													
			Frame and Cover for Gratings	2.3.4													

SUBMITTAL REGISTER

CONTRACT NO.

TITLE AND LOCATION
Upper Berryessa Creek

CONTRACTOR

ACTIVITY NO	TRANSMITTAL NO	SPEC SECT	DESCRIPTION ITEM SUBMITTED	PARAGRAPH #	CLASSIFICATION	GOVT OR A/E REVWR	CONTRACTOR: SCHEDULE DATES			CONTRACTOR ACTION			APPROVING AUTHORITY				MAILED TO CONTR/ DATE RCD FRM APPR AUTH
							SUBMIT	APPROVAL NEEDED BY	MATERIAL NEEDED BY	ACTION CODE	DATE OF ACTION	DATE FWD TO APPR AUTH/ DATE RCD FROM CONTR	DATE FWD TO OTHER REVIEWER	DATE RCD FROM OTH REVIEWER	ACTION CODE	DATE OF ACTION	
(a)	(b)	(c)	(d)	(e)	(f)		(g)	(h)	(i)	(j)	(k)	(l)	(m)	(n)	(o)	(p)	(q)
		33 46 16	Pipe for Subdrains	2.1													
			SD-07 Certificates														
			Filter Fabric	2.2													
			Pipe for Subdrains	2.1													
		34 11 00	SD-03 Product Data														
			Wood Ties	2.8													
			Relay Rail	2.6.1.1	G												
			Joint Bars	2.3													
			Compromise Joint Bars	2.3.2													
			Miscellaneous Track Materials	2.10													
			Crossing Material or Surface	2.9.1													
			Acceptable Replacement	1.5.1	G												
			Materials														
			Traffic Maintenance and Detour	1.6.2	G												
			Plans														
			Thermite Welding Procedures	3.8	G												
			Electric Arc Welding	3.11.3													
			Materials and Samples	1.5.1													
			SD-04 Samples														
			Ballast	2.1													
			Subballast	2.2													
			SD-06 Test Reports														
			Sampling and Testing	3.10													
			Wood Ties	2.8													

CONTROLLED

SUBMITTAL REGISTER

CONTRACT NO.

TITLE AND LOCATION
Upper Berryessa Creek

CONTRACTOR

ACTIVITY NO	TRANSMITTAL NO	SPEC SECT	DESCRIPTION ITEM SUBMITTED	PARAGRAPH #	CLASSIFICATION	GOVT OR A/E REVWR	CONTRACTOR: SCHEDULE DATES			CONTRACTOR ACTION			APPROVING AUTHORITY				MAILED TO CONTR/ DATE RCD FRM APPR AUTH
							SUBMIT	APPROVAL NEEDED BY	MATERIAL NEEDED BY	ACTION CODE	DATE OF ACTION	DATE FWD TO APPR AUTH/ DATE RCD FROM CONTR	DATE FWD TO OTHER REVIEWER	DATE RCD FROM OTH REVIEWER	ACTION CODE	DATE OF ACTION	
(a)	(b)	(c)	(d)	(e)	(f)		(g)	(h)	(i)	(j)	(k)	(l)	(m)	(n)	(o)	(p)	(q)
		34 11 00	Wood Ties	2.8													
			Ballast	2.1													
			Subballast	2.2													
			Materials and Samples	1.5.1													
			SD-10 Operation and Maintenance														
			Data														
			Rail	2.6	G												
			Switches		G												
			Grade Crossings	2.9	G												
			SD-11 Closeout Submittals														
			As-Built Drawings	3.5.10	G												
		35 31 19	SD-03 Product Data														
			Riprap	3.3.3	G												
			Bedding Stone	2.2.1	G												
			Bulk Specific Gravity Test	1.3.3.1	G												
			Ready-Mixed Concrete Grout	3.4.1.1	G												
			Batching and Mixing Equipment	2.3.6	G												
			Admixtures	2.3.3	G												
			Curing Materials	2.3.4	G												
			Conveying and Placing	3.4.1.3	G												
			SD-06 Test Reports														
			Gradation Test	1.3.3	G	ED											
			Gradation Test	1.3.3.1	G	ED											
			Stone Quality Acceptance Test	1.3.3.1	G												

SUBMITTAL REGISTER

CONTRACT NO.

TITLE AND LOCATION
Upper Berryessa Creek

CONTRACTOR

ACTIVITY NO	TRANSMITTAL NO	SPEC SECT	DESCRIPTION ITEM SUBMITTED	PARAGRAPH #	CLASSIFICATION	GOVT OR A/E REVWR	CONTRACTOR: SCHEDULE DATES			CONTRACTOR ACTION			APPROVING AUTHORITY				MAILED TO CONTR/ DATE RCD FRM APPR AUTH
							SUBMIT	APPROVAL NEEDED BY	MATERIAL NEEDED BY	ACTION CODE	DATE OF ACTION	DATE FWD TO APPR AUTH/ DATE RCD FROM CONTR	DATE FWD TO OTHER REVIEWER	DATE RCD FROM OTH REVIEWER	ACTION CODE	DATE OF ACTION	
(a)	(b)	(c)	(d)	(e)	(f)		(g)	(h)	(i)	(j)	(k)	(l)	(m)	(n)	(o)	(p)	(q)
		35 31 19	SD-07 Certificates														
			Stone and Bedding Stone	3.1													
			Laboratory	1.3.2.2	G ED-G												
			Laboratory	3.3.4.2	G ED-G												
			Weigh Scale Certification	3.3.5													
			Certified Weight Scale Tickets	3.3.5													

CONTROLLED

Appendix C

Berryessa Archeological Monitoring Plan

CONFORMED

Final Archaeological Monitoring Plan for CA-SCL-593

Berryessa Creek Channel Improvements
Milpitas, California

May 25, 2016

Introduction

The Memorandum of Agreement (MOA) between the U.S. Army Corps of Engineers, San Francisco District (USACE) and the State Historic Preservation Officer (SHPO) stated that a Historic Property Treatment Plan (HPTP) was required and it shall identify procedures in the event that significant cultural material (e.g., deposit with formed artifacts, rock fire pits, dietary shell lenses) or additional Native American burials are encountered during construction. The language in the MOA and HPTP regarding monitoring during construction has been coalesced into this Archaeological Monitoring Plan (AMP), which specifies how the contractor will operate construction equipment when excavating through the archaeological site area of SCL-593. The USACE is the lead agency responsible for ensuring that the stipulations of the HPTP are understood by the contractor, followed and the results recorded.

The treatment of Native American burials and associated artifacts during the most recent archaeological work completed by Basin Research Associates was governed by a Burial Treatment Plan (BTP) and the recommended protocols presented by the Most Likely Descendent (MLD). The procedures outlined in the BTP and the MLD recommendations are repeated in this AMP and will remain as guiding documents to properly treat and remove any additional human remains exposed during construction. All documentation will be provided to the project contractor.

The Archaeological Site

Archaeological site CA-SCL-593 has incurred severe damage from the realignment of Berryessa Creek and the Union Pacific Rail Road tracks, and yet there are remnants of cultural deposits that yielded information important to prehistory, and also human burials that have survived and become exposed in the open channel. Agency-sponsored archaeological excavations sampled the deposits to obtain information in accordance with the HPTP to resolve the adverse effects from the proposed project. The boundaries of SCl-593 are based on the Phase 1 archaeological investigations prepared by Basin Research Associates in October 2015. The Phase I results showed that the site burial data, cultural constituents, and radiocarbon dates provided information to answer some of the research questions in the HPTP. The archaeological studies demonstrated a consistent low-density of shell and stone and very few features, therefore it is reasonable to expect that the archaeological deposits to be damaged by channel work will continue to produce the same type of information. No further controlled archaeological investigations are therefore warranted. It is nonetheless prudent to monitor the channel excavations to verify the findings and also to recover archaeological materials of research value that may not have been revealed earlier.

CONFORMED

General Requirements

The construction project will require the services of a professional and experienced archaeologist that meets the Secretary of the Interior's Standards for archaeology to implement this AMP during project construction. The archaeologist will be the principle monitor, who shall be present on-site when any construction activities will occur within and adjacent to the mapped boundaries of the archaeological site SCL-593. During project mobilization and prior to commencing construction, the archaeologist shall meet with the construction crew to clarify the monitoring protocol and to review the potential range of archaeological work that will be needed for various finds.

The archaeologist shall provide training to construction personnel covering both identification of archaeological resources expected within the SCL-593 boundaries. This preconstruction training session will be held before the beginning of construction. All training sessions will be conducted in person and in English. Construction personnel will be briefed on the purpose for archaeological monitoring and the basic identification of archaeological resources, and the proper discovery protocols to be followed in the event of an archaeological discovery during construction.

The archaeologist will be responsible for making in-field evaluations of archaeological features, and in consultation with the USACE reach agreement on the disposition of the finds and estimated time to complete removal based upon pre-arranged templates. The emphasis is to recover new information that contributes to the site's archaeological value if it is unearthed. The recovery of encountered archaeological features may require studies and/or testing of samples or artifacts by outside experts or consultants.

The recordation and removal of features by the archaeologist will require additional archaeologists to assist, which will ensure that an archaeologist is available when construction resumes under the monitoring plan. Specific procedures are described below to adequately recover information before removal of recorded features, to set reasonable timeframes for the work and to suggest how the contractor's operations will accommodate these situations. In addition, the discovery of Native American burials during equipment operations will be governed by the BTP and recommendations of the MLD, and the removal of such will be managed by the archaeologist with assistance from others.

Native American Consultation

A Native American consultant listed with the Native American Heritage Commission shall support the archaeological monitoring program. The Native American shall be on-site at the commencement of construction work at SCL-593 to consult with the principal archaeologist, attend training/meetings for construction crews, and observe the initial monitoring operations.

Archeological Discovery Protocols and Impacts to Construction Schedule

CONFORMED

The contractor's channel excavations and associated earth-disturbing activities within the boundaries of archaeological site SCL-593 shall be performed only when the archaeologist is present to monitor the work and in accordance with the stipulations on equipment operation and excavation methods. The ways in which the channel widening and deepening will be accomplished through the site must be specialized. For example, the thickness of bucket or blade cuts is reduced, and thus a smaller areal exposure for the monitoring archaeologist to see and inspect. Also, the archaeologist will occasionally want to "pause" equipment to get a closer at soils for evidence of an archaeological feature, without lengthy delays. The contractor will therefore have a lower production rate compared to the straightforward channel work elsewhere. This specialized approach will be limited initially to a trial period of 2 to 3 work days, and the results reviewed by USACE to decide whether to continue with the specialized plan.

Of importance is that the monitoring shall be conducted in a controlled fashion. The contractor is advised that if archaeological finds are made during monitoring at site SCL-593, the archaeologist will have the authority to temporarily suspend or restrict work in order to implement the evaluation and removal actions, and the work will commence only when the proper protocols are met and the contractor is informed to resume work. The contractor's work in other portions of the project area (outside the boundaries of site SCl-593) shall be subjected to periodic inspections by the archaeologist. This will require coordination for site access, but not hinder the contractor's operations.

Under the direction of the archaeologist, the contractor shall immediately stop work within 50 feet of the location of any discovery of archaeological features. Archaeological features include but are not limited to (a) concentrations of prehistoric artifacts such as chipped stone arrow or spear projectile, and ground stone tools such as stone mortars and pestles, (b) deposits of ash-stained soils ("midden") from daily living activities, and (c) concentrations of fire-altered rock and/or burned or charred organic materials from hearths. Following any work stoppage and during the archaeological actions to remove the finds, equipment may continue operations at other locations outside the 50-foot discovery area under the supervision of the monitoring archaeologist.

The duration of work stoppage at the discovery site shall be sufficient to allow the monitoring archaeologist to conduct an evaluation of the significance of the find and to receive verbal authorization from USACE to remove the feature. It is estimated that 48 hours from discovery would be sufficient time to complete this step. The estimated duration of recording and removing features would range from 48 to 72 hours. Per the MOA, a "significant" archaeological find would require review and consultation with the SHPO, and would add an additional 48 hours.

Human Burial Discoveries

Pursuant to the requirements of the State of California Public Resources Code Section 5097.94 and the Health and Safety Code Section 7050.5, upon discovering or unearthing any

CONFORMED

burial site as evidenced by human skeletal remains, the archaeologist shall immediately notify the Santa Clara County Coroner. The contractor shall immediately secure the site and protect any human remains from further disturbance, and will no conduct additional excavation or disturbance of the finds within a 50-foot radius. Upon determination by the County Coroner that the remains are Native American, the Coroner will contact the Native American Heritage Commission. Because human remains connected to site CA-SCL-593 have been uncovered and removed in consultation with the current MLD, Mr. Andrew Galvan, this established process will likely continue for all future uncovered human remains from SCL-593. The Burial Treatment Plan and recommendations of the MLD previously approved and implemented will be adhered to.

The contractor will be advised that if burials are encountered, the same suspend-work provisions described above will be invoked. In addition, the USACE will arrange access to burial site locations by permission from the Santa Clara Valley Water District and other landowners depending on the exact location, and the contractor will be bound by provisions of any real estate permit or easement conditions.

Report of Monitoring Results and Disposition of Cultural Materials

The monitoring results, the outcome of archaeological studies, and removal of features shall be documented in a field survey report, including a description of work, findings, and appropriate maps and photos. All information regarding cultural resources including site locations, Native American human remains, and associated funerary objects will be kept confidential and will not be made available for public disclosure. The written report will be submitted to the USACE who shall coordinate with the SHPO as needed.

Final disposition of all collected archaeological materials shall be documented in the field report. Long-term storage of the archaeological collections shall be housed at the facility nearest to the discovery locale that conforms to Federal guidelines for curation of archaeological collections (36 CFR 79).

All authored reports by the consulting archaeologist shall be prepared in draft form for review by USACE and Native American consultants. The final report along with updated standard California records (DPR 523 series) shall be filed at the Northwest Information Center, California Historical Resources Information System.

CONFORMED

Appendix D

EP-310-1-6a-16

Construction Project Signs

CONFORMED

The use of signs to identify Corps managed or supervised design, construction, and rehabilitation projects - both for military and civil works - is an important part of efforts to keep the public informed of Corps work. For this purpose, a construction project sign package has been adopted. This package consists of two signs: one for project identification and the other to show on-the-job safety performance of the contractor.

These two signs are to be displayed side by side and mounted for reading by passing viewers. Exact placement location will be designated by the contracting officer's representative.

The panel sizes and graphic formats have been standardized for visual consistency throughout all Corps operations.

Panels are fabricated using HDO plywood or aluminum with dimensional lumber uprights and bracing. The sign faces are nonreflective vinyl.

All legends are to be die-cut or computer-cut in the sizes and typefaces specified and applied to the white panel background following the graphic formats shown on pages 16-2 and 16-3. The Communication Red panel on the left side of the construction project sign with Corps Signature (reverse version) is screen-printed onto the white background.

A display of these two signs is shown on the following two pages. Mounting and fabrication details are provided on page 16-4.

Special applications or situations not covered in these guidelines should be referred to the district Sign Program Manager.

CONFORMED

Construction Project Identification Sign

Below are two samples of the Construction Project Identification sign showing how this panel is adaptable for use to identify either military (top) or civil works projects (bottom). The graphic format for this 4'x 6' sign panel follows the legend guidelines and layout as specified below. The large 4'x 4' section of the panel on the right is to be white with black legend. The 2'x 4' section of the sign on the left with the full Corps Signature (reverse version) is to be screen-printed Communication Red on the white background The designation of a sponsor in the area indicated is optional with Military or Civil Works construction signs. Signs may list one sponsoring entity. If agreement on a sponsor designation cannot be achieved, the area should be left blank.

This sign is to be placed with the Safety Performance sign shown on the following page. Mounting and fabrication details are provided on page 16-4.

Special applications or situations not covered in these guidelines should be referred to the district Sign Program Manager.

Legend Group 1: One- to two-line description of Corps relationship to project.
Color: White
Typeface: 1.25" Helvetica Regular
Maximum line length: 19"

Legend Group 2: Division or District Name (optional). Placed below 10.5" reverse Signature (6" Castle).
Color: White
Typeface: 1.25" Helvetica Regular

Legend Group 2a: One- to three-line identification of Military or Civil Works sponsor (optional). Place below Corps Signature to cross-align with Group 5a-b.
Color: White
Typeface: 1.25" Helvetica Regular
Maximum line length: 19"

Legend Group 3: One- to three-line project title legend describes the work being done under this contract.
Color: Black
Typeface: 3" Helvetica Bold
Maximum line length: 42"

Legend Group 4: One- to two-line identification of project or facility (civil works) or name of sponsoring department (military).
Color: Black
Typeface: 1.5" Helvetica Regular
Maximum line length: 42"

Cross-align the first line of Legend Group 4 with the first line of the Corps Signature (US Army Corps) as shown.

Legend Groups 5a-b: One- to five-line identification of prime contractors including: type (architect, general contractor, etc.), corporate or firm name, city, state. Use of Legend Group 5 is optional.
Color: Black
Typeface: 1.25" Helvetica Regular
Maximum line length: 21"

All typography is flush left and rag right, upper and lower case with initial capitals only as shown. Letter- and word-spacing to follow Corps standards as specified in Appendix D.

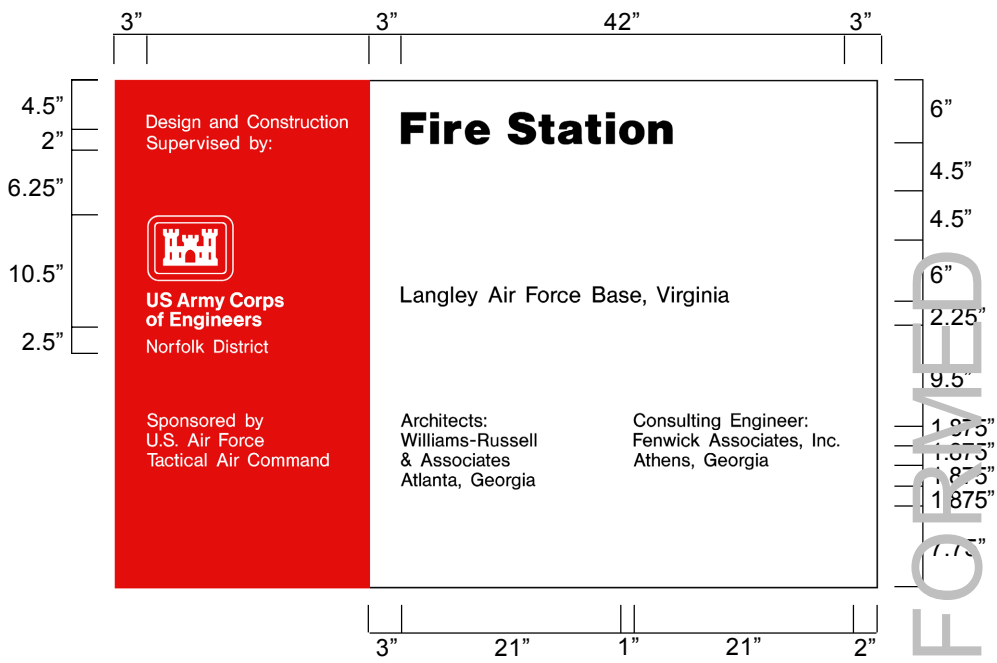

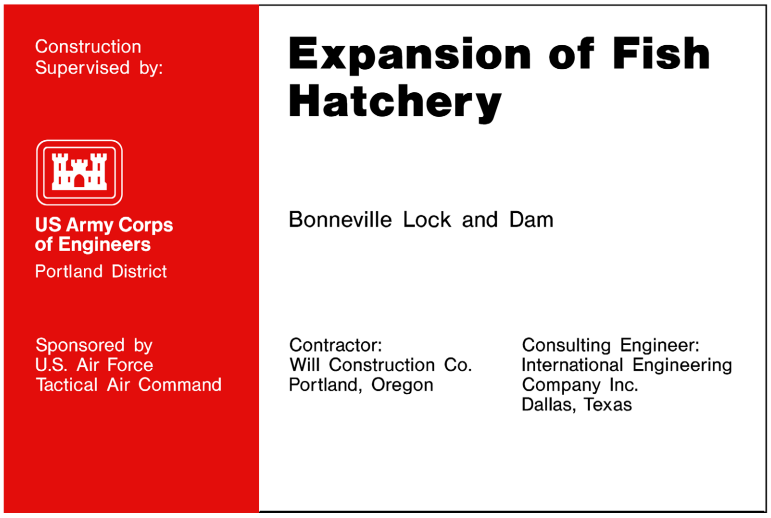

Sign Type	Legend Size (A)	Panel Size	Post Size	Specification Code	Mounting Height	Color Bkg/Lgd
CID-01	various	4'x6'	4"x4"	HDO-3	48"	WH-RD/BK

CONFORMED

Each contractor's safety record is to be posted on Corps managed or supervised construction projects and mounted with the Construction Project Identification sign specified on page 16-2.

The graphic format, color, size and typefaces used on the sign are to be reproduced exactly as specified below. The title with First Aid logo in the top section of the sign, and the performance record captions are standard for all signs of this type. Legend groups 2 and 3 below identify the project and the contractor and are to be placed on the sign as shown.

Safety record numbers are mounted on individual metal plates and are screw-mounted to the background to allow for daily revisions to posted safety performance record.

Special applications or situations not covered in these guidelines should be referred to the district Sign Program Manager.

Legend Group 1: Standard two-line title "Safety is a Job Requirement" with 8" (outside diameter) Safety Green first aid logo.
Color: To match Pantone system 347
Typeface: 3" Helvetica Bold
Color: Black

Legend Group 2: One- to two-line project title legend describes the work being done under this contract and name of host project.
Color: Black
Typeface: 1.5" Helvetica Regular
Maximum line length: 42"

Legend Group 3: One- to two-line identification: name of prime contractor and city, state address. Color: Black
Typeface: 1.5" Helvetica Regular
Maximum line length: 42"

Legend Group 4: Standard safety record captions as shown.
Color: Black
Typeface: 1.25" Helvetica Regular

Replaceable numbers are to be mounted on white .060 aluminum plates and screw-mounted to background.
Color: Black
Typeface: 3" Helvetica Regular
Plate size: 2.5" x 4.5"

All typography is flush left and rag right, upper and lower case with initial capitals only as shown. Letter- and word-spacing to follow Corps standards as specified in Appendix D.

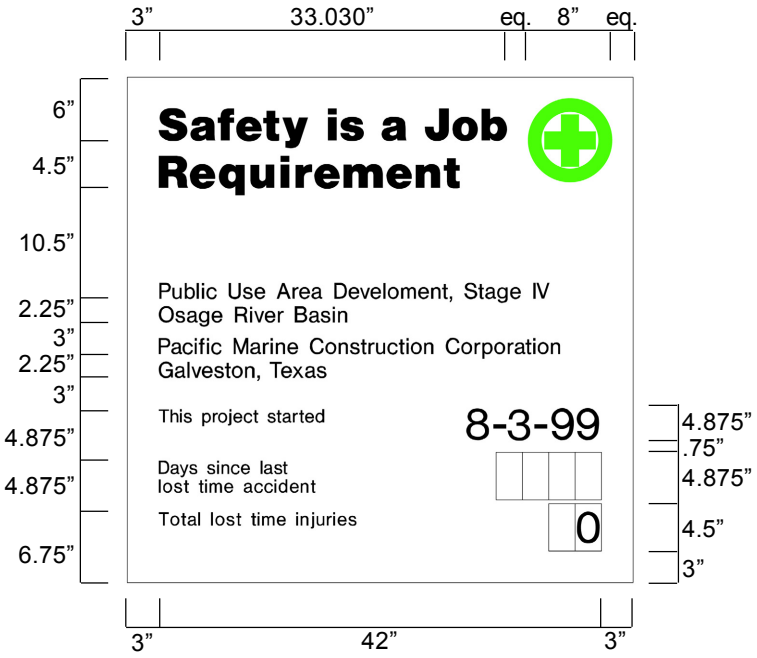

Sign Type	Legend Size (A)	Panel Size	Post Size	Specification Code	Mounting Height	Color Bkg/Lgd
CID-02	various	4'x4'	4"x4"	HDO-3	48"	WH/BK-SG

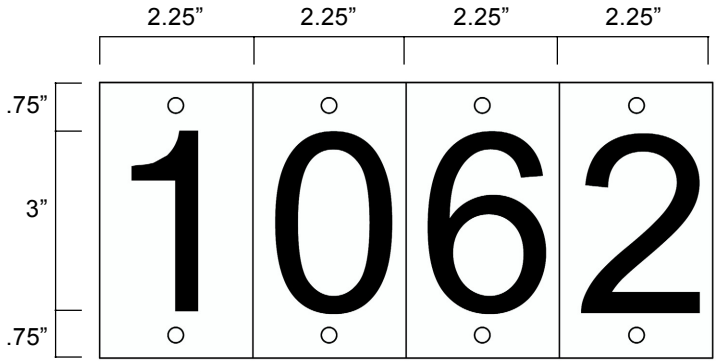

CONFORMED

Fabrication and Mounting Guidelines

All Construction Project Identification signs and Safety Performance signs are to be fabricated and installed as described below. The signs are to be erected at a location designated by the contracting officer representative and shall conform to the size, format, and typographic standards shown on pages16-2 and 16-3. Detailed specifications for HDO plywood panel preparation are provided in Appendix B.

Shown below the mounting diagram is a panel layout grid with spaces provided for project information. Photocopy this page and use as a worksheet when preparing sign legend orders.

For additional information on the proper method to prepare sign panel graphics, contact the district Sign Program Manager.

The sign panels are to be fabricated from .75" High Density Overlay Plywood. Panel preparation to follow HDO specifications provided in Appendix B.

Sign graphics to be prepared on a white nonreflective vinyl film with positionable adhesive backing.

All graphics except for the Communication Red background with Corps Signature on the project sign are to be die-cut or computer-cut nonreflective vinyl, prespaced legends prepared in the sizes and typefaces specified and applied to the background panel following the graphic formats shown on pages 16-2 and 16-3.

The 2'x 4' Communication Red panel (to match Pantone system 032) with full Corps Signature (reverse version) is to be screen-printed on the white background. Identification of the district or division may be applied under the signature with white cut vinyl letters prepared to Corps standards.

Drill and insert six (6) .375" T-nuts from the front face of the HDO sign panel. Position holes as shown. Flange of T-nut to be flush with sign face.

Apply graphic panel to prepared HDO plywood panel following manufacturers' instructions.

Sign uprights to be structural grade 4" x 4" treated Douglas Fir or Southern Yellow Pine, No.1 or better. Post to be 12' long. Drill six (6) .375" mounting holes in uprights to align with T-nuts in sign panel. Countersink (.5") back of hole to accept socket head cap screw (4" x .375").

Assemble sign panel and uprights. Imbed assembled sign panel and uprights in 4' hole. Local soil conditions and/or wind loading may require bolting additional 2" x 4" struts on inside face of uprights to reinforce installation as shown.

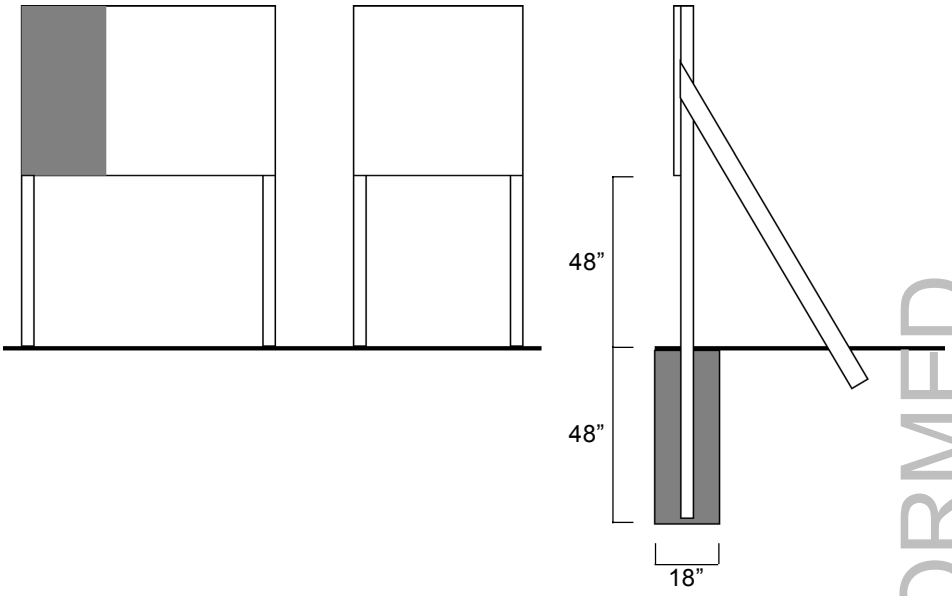

Construction Project Identification Sign
Legend Group 1: Corps Relationship

1. _____
2. _____

Legend Group 2: Division/District Name

1. _____
2. _____

Legend Group 2a: Military/Civil Works Sponsor

1. _____
2. _____

Legend Group 3: Project Title

1. _____
2. _____
3. _____

Legend Group 4: Facility Name

1. _____
2. _____

Legend Group 5: Contractor/A&E

1. _____
2. _____
3. _____
4. _____
5. _____

Legend Group 5b: Contractor/A&E

1. _____
2. _____
3. _____
4. _____
5. _____

Safety Performance Sign
Legend Group 2: Project Title

1. _____
2. _____

Legend Group 3: Contractor/A&E

1. _____
2. _____

CONFORMED

Appendix E

Groundwater Management Plan

CONFORMED

GROUNDWATER MANAGEMENT PLAN

UPPER BERRYESSA CREEK FLOOD RISK MANAGEMENT PROJECT
JONES CHEMICAL INC. PLUME AREA
MILPITAS, SANTA CLARA COUNTY, CALIFORNIA

Prepared for:

Santa Clara Valley Water District
5750 Almaden Expressway
San Jose, CA 95118-3686

Prepared by:

Tetra Tech, Inc.
17885 Von Karman Avenue, Suite 500
Irvine, California 92614-6213

March 10, 2016

CONFORMED

[This page intentionally left blank]

CONFORMED

TABLE OF CONTENTS

1.0 INTRODUCTION **1**

2.0 SUMMARY OF GROUNDWATER CONDITIONS **1**

2.1 AREA OF INTEREST BOUNDARIES 1
2.2 PROJECT AREA HYDROGEOLOGY 1
2.3 CONTAMINANTS 2

3.0 BERRYESSA CREEK WIDENING PLANS **2**

3.1 CONSTRUCTION METHODOLOGY 2
3.2 IMPORT AND DISPOSAL 3
3.3 CONSTRUCTION EQUIPMENT AND WORKERS 3

4.0 PERMITTING EVALUATION **3**

5.0 DIVERSION AND CONTROL OF AOI GROUNDWATER **4**

5.1 COFFERDAM 4
5.2 GROUNDWATER WELLS 5
5.2.1 Well Spacing and Expected Pumping Volume 5
5.2.2 Typical Dewatering Well Construction Details 5

6.0 GROUNDWATER TREATMENT AND CONVEYANCE EQUIPMENT **6**

7.0 COMPLIANCE MONITORING **7**

7.1 COMPLIANCE SAMPLING 7
7.1.1 Compliance Sampling: Day 1 of Operation 7
7.1.2 Compliance Sampling: Day 5 of Operation 8
7.1.3 Discharge Monitoring 8
7.2 MEDIA BREAKTHROUGH MONITORING 9

8.0 MEDIA CHANGE-OUT PROCEDURES **9**

8.1 HAZARDOUS WASTE DISPOSAL SITE 10

9.0 REPORTING **10**

10.0 DEMOBILIZATION **11**

11.0 HEALTH AND SAFETY OVERVIEW **11**

12.0 REFERENCES **12**

CONFORMED

LIST OF TABLES

Table 1 Volatile Organic Compound in Area of Interest Groundwater
Table 2 Extracted Groundwater Sampling Requirements
Table 3 Groundwater Treatment Standards
Table 4 Hazardous Thresholds for Granular Activated Carbon

LIST OF FIGURES

Figure 1 JCI Shallow Groundwater Plume
Figure 2 Area of Interest
Figure 3 Proposed Project Typical Sections
Figure 4 Approximate Location of Shallow Groundwater Extraction Wells in AOI
Figure 5 Process Flow Schematic

LIST OF ATTACHMENTS

Attachment A SFBRWQCB Non-Enforcement Letter dated August 14, 2015
Attachment B Photograph of Typical Temporary Groundwater Treatment Plant
Attachment C Typical Specifications for a 100 Gallons Per Minute Temporary Groundwater Treatment Plant
Attachment D Typical Specifications for 700 Gallons Per Minute Temporary Groundwater Treatment Plant

CONFORMED

ABBREVIATIONS AND ACRONYMNS

AOI	Area of Interest
bgs	below ground surface
DCA	dichloroethane
DCE	dichloroethene
DDR	Design Documentation Report
EPA	Environmental Protection Agency
ESL	Environmental Screening Levels
FEMA	Federal Emergency Management Agency
GAC	granular activated carbon
gpm	gallons per minute
GWMP	Groundwater Management Plan
HASP	Health and Safety Plan
HAZWOPER	Hazardous Waste Operations and Emergency Response
JCI	Jones Chemical, Inc.
JSAs	Job Safety Analyses
MCL	maximum contaminant level
ND	not detected
NPDES	National Pollutant Discharge Elimination System
PCE	Tetrachloroethylene
PVC	Polyvinyl chloride
RCRA	Resource Conservation and Recovery Act
SFBRWQCB	San Francisco Bay Regional Water Quality Control Board
TCE	Trichloroethylene
TCLP	Toxicity Characteristic Leaching Procedure
TDS	total dissolved solids
UPRR	Union Pacific Railroad
USACE	United States Army Corps of Engineers
VC	vinyl chloride
VOC	volatile organic compound
µg/L	micrograms per liter

CONFORMED

[This page intentionally left blank]

CONFORMED

1.0 INTRODUCTION

This Groundwater Management Plan (GWMP) has been prepared to guide field activities within the Jones Chemical, Inc. (JCI) groundwater plume during implementation of the Berryessa Creek Flood Risk Management Project (the Project). This GWMP will be implemented by the Construction Contractor as part of the Project that is being managed by the United States Army Corps of Engineers. In general, the GWMP defines the conceptual approach for the extraction, conveyance, and treatment of groundwater within the Area of Interest (AOI) that is bound by the intersection of the Project and the JCI groundwater plume (see Figures 1 and 2). This GWMP does not apply to any work performed outside the AOI and will only be utilized if groundwater is encountered by the Construction Contractor while performing work within the AOI.

2.0 SUMMARY OF GROUNDWATER CONDITIONS

This section summarizes the AOI boundaries, Project area hydrogeology, and the conditions associated with the JCI groundwater plume.

2.1 Area of Interest Boundaries

The AOI is bound by the Project boundaries and the JCI groundwater plume. As shown on Figure 2, the dimensions of the AOI where channel construction will take place are approximately 70 feet wide by approximately 1000 feet long, or approximately from Station 155+00 to Station 165+00 on the construction plan sheets The sequencing of work within the AOI will be at the discretion of the Construction Contractor. However, for the purposes of this GWMP, it is assumed that the Construction Contractor will perform work in 300-foot sections, excavating and backfilling each 300-foot section before progressing to the next section. It will take approximately 2-4 weeks to complete the work within the AOI.

2.2 Project Area Hydrogeology

The Project area is underlain by interbedded alluvial sediments composed of sand, gravel, silt, and clay. The uppermost 5 to 10 feet of the subsurface consists of fill material, which is clay, gravely clay, sand, and gravel. Sediments underlying the fill material predominantly consist of clay, silty clay, and sandy clay, with variable amounts of sand and gravel. The clays encountered in soil borings contain intervals of sand ranging in thickness from several inches to approximately 11 feet. Historically, the depth to groundwater within the AOI has ranged between approximately 7 to 20 feet below ground surface (Tetra Tech, 2015a, and http://geotracker.waterboards.ca.gov/profile_report.asp?global_id=SL18213593).

Tetra Tech drilled a soil boring in the AOI in December 2014 (Tetra Tech, 2015a); a saturated zone was encountered from 15.5 feet bgs to 19 feet below ground surface (bgs), returning to slightly moist soil conditions from 19 feet to 20 feet bgs. Upon removal of the drilling rods, the groundwater level rose to 13 feet below grade in the boring.

Historical groundwater elevation data collected at and near the project area indicate groundwater flows generally toward the west-northwest.

CONFORMED

2.3 Contaminants

The groundwater beneath the AOI is impacted by volatile organic compounds (VOCs), attributed to the 1982 chlorinated solvent spill at the former JCI Facility. The following VOCs have recently been detected in shallow groundwater within the AOI at concentrations exceeding maximum contaminant levels (MCLs): tetrachloroethylene (PCE), trichloroethylene (TCE), trans–1,2-dichloroethene (t-1,2-DCE), cis-1,2-DCE, 1,1-dichloroethane (1,1-DCA), 1,1-DCE, and vinyl chloride (VC). The Semiannual Groundwater Monitoring Reports dated February 27, 2015 (Arcadis, 2015a) and August 31, 2015 (Arcadis, 2015b) for the former JCI facility indicate that VOCs were detected during these two reporting periods in JCI groundwater monitoring wells B14, B15, B19, B58, and B59 (the JCI groundwater monitoring wells that are closest to the AOI) at concentrations that ranged from not detected above the laboratory reporting limit (ND) to 1,400 micrograms per liter (ug/L) as shown on Figure 1. These data are summarized and compared to the pertinent MCL and San Francisco Bay Regional Water Quality Control Board (SFBRWQCB) Environmental Screening Levels (ESL) in Table 1 in the Tables Section following the report narrative.

3.0 BERRYESSA CREEK WIDENING PLANS

Upper Berryessa Creek will be redesigned to provide flood damage reduction benefits from the overpass of I-680 to the upstream side of Calaveras Boulevard. The increased flood protection will include Widening to add capacity and bank protection to provide channel stability.

The major features of the project in the AOI include widening the creek channel, installing a concrete box culvert to replace an existing railroad trestle, and expanding or surfacing existing access roads with aggregate paving. Figure 3 shows the following features:

- The channel banks would be excavated with 2H:1V channel sideslopes.
- Buried rock revetment would be placed for scour protection from the toe of bank to between the 2.5-year and 10-year flood elevation, with the installation of biodegradable erosion control blankets and vegetation between the top of the rock revetment and the top of the bank
- The existing Union Pacific Railroad (UPRR) trestle bridge would be replaced with a double-barreled box culvert, with Concrete, warped wingwall transition structures upstream and downstream of the newly-constructed UPRR trestle.
- Two aggregate-paved maintenance roads, 18 feet wide and 15 feet wide will be located on the right and left banks looking downstream, respectively, within this area.

As shown in the profile on Figure 3, proposed excavation typically ranges from 1-3 feet below the current channel bottom and approximately 12-13 feet below ground surface (bgs) at areas proposed for widening of the channel. In the AOI, borings conducted in 2014 found saturated soils approximately 15-20 feet bgs. Results from 2014 monitoring well data for this location yielded an average depth to groundwater of 12.1 feet bgs.

3.1 Construction Methodology

The main construction components listed below are provided in roughly the sequence in which they would occur, although several of the components may occur concurrently. In addition to these construction components, the railroad trestle bridge that is within the AOI will be replaced. This replacement includes

CONFORMED

removal of the existing bridge and placing a prefabricated concrete box culvert upon which UPRR will replace the track.

- Utility relocations
- Clearing and grubbing
- Excavation with dewatering as required
- Placement and compaction of fill
- Placement of geotextile fabric
- Importing and placement of rock revetment
- Placement of biodegradable turf reinforcement mats
- Plantings as required
- Placement of aggregate base on the access roadways

3.2 Import and Disposal

Soil, reinforcing steel, vegetation, and concrete will be excavated during construction. Some of the clean excavated soils will be reused on-site. Vegetation will be composted, steel and concrete debris will be recycled, and the balance of the materials will be disposed of at one or more approved landfills.

3.3 Construction Equipment and Workers

The following equipment is anticipated to be used during Project implementation within the AOI:

- Backhoes
- Bulldozers
- Cranes
- Compactors
- Concrete trucks
- Graders
- Excavators
- Jackhammers
- Dump trucks/haul trucks
- Loaders
- Pumps
- Scrapers

Construction will either occur over two dry seasons from May to October, or continuously for one year. Construction hours will generally be during normal business hours, but after-hours work may be needed for concrete pours or replacement of the existing UPRR trestle with a concrete box culvert. The types of construction equipment in use and the number of workers actively working at the project area will vary depending on the phase of construction. The number of workers present on any given day is estimated at 25 in general, and up to 40 on occasion.

CONFORMED

4.0 PERMITTING EVALUATION

A Notice of Intent will not be submitted to obtain coverage for managing groundwater associated with the AOI under the National Pollutant Discharge Elimination System (NPDES) general permit. As a result of not obtaining this permit, the SFBRWQCB has required the preparation and submittal of this GWMP which provides the methods and procedures for controlling and diverting groundwater, if necessary, while working within the AOI, as identified in their August 14, 2015 non-enforcement letter and included in Attachment A.

Prior to discharge, the AOI groundwater will be treated to meet the standards set forth in the NPDES General Permit No. CAG912002 (NPDES Permit) for fuel and VOC impacted sites under the requirements of SFBRWQCB Order No. R2-2012-0012 (SFBRWQCB, 2015).

If dewatering wells are installed to lower the water table (see Section 5.0), the Construction Contractor will obtain all appropriate permits which can include permits and/or authorization from the Santa Clara Valley Water District to install and abandon the wells.

5.0 DIVERSION AND CONTROL OF AOI GROUNDWATER

Depending on field conditions at the time of Project implementation, it may be necessary to control and divert groundwater to achieve the Project objectives and comply with Project requirements including excavation, placement of material, and soil compaction. As is the case throughout the Project reach, the Construction Contractor will determine whether groundwater control and diversion is necessary in order to, for example, lower the groundwater level at the start of construction or limit water seepage into the construction zone during construction.

This GWMP applies only to work within the AOI. In addition to this GWMP, all work within the AOI shall be performed in accordance with the Project Rain Event Action Plan, design drawings, specifications, and permits.

If the Construction Contractor (1) determines that groundwater will be exposed and/or encountered within the AOI, or (2) if groundwater is exposed and/or encountered within the Project AOI during construction, the Construction Contractor will control and collect the groundwater, prior to treatment and discharge, by selecting and implementing one or a combination of the following methods. Both are considered acceptable. The Contractor's selection will consider the observation of field conditions, effectiveness of the methods, and relative time and cost.

- Constructing cofferdams at the downgradient end of the AOI or sections of the AOI that are under construction; and/or
- Installing and operating dewatering wells.

5.1 Cofferdam

If the Construction Contractor opts to design, construct, and utilize a cofferdam for groundwater control and diversion, the Construction Contractor will grade the AOI to direct groundwater flow to the cofferdam where the groundwater will be temporarily stored until it is pumped to the groundwater treatment equipment that is described in Section 6.0. If groundwater is too evenly spread across the surface to be effectively pumped to the treatment system, the Construction Contractor may decide to provide interim grading to one location and/or implement a small basin or sump from which to pump. The size of both the cofferdam and any sump that may be required, as well as the period of time that the cofferdam is required to contain water, is dependent on the field conditions at the time of construction.

In accordance with SFBRWQCB guidelines, the Construction Contractor shall submit to the Project Engineer for review, a cofferdam design that, at a minimum, identifies the following:

- Construction material
- Height of structure(s)
- How the area will be dewatered
- Overtopping precautions such that overtopping will not occur, and

CONFORMED

- Discharge locations and structures

The treated groundwater will be discharged downstream in Berryessa creek.

5.2 Groundwater Wells

Alternatively, the Construction Contractor may opt to install and operate shallow dewatering wells to lower the water table prior to commencing work within the AOI. Dewatering contractors with extensive San Francisco Bay experience estimated that dewatering groundwater in the project area will require approximately 20 groundwater extraction wells on 50-foot centers to lower the shallow groundwater table.[1] The exact spacing of the dewatering wells may vary based on the amount of groundwater encountered during construction. The extraction wells, if installed, will be located along the west side of Berryessa Creek as shown on Figure 4. The extracted water will be pumped above ground to the treatment plant that is described in Section 6.0 prior to subsequent discharge.

5.2.1 Well Spacing and Expected Pumping Volume

The dewatering wells, if installed, are anticipated to initially operate at approximately 40 gallons per minute (gpm) each. Once the water column in each well and the gravel pack around each well are dewatered, the sustainable extraction rate will likely decrease to a sustainable rate of approximately 5 gpm per well.

Assuming that 20 wells will be installed along the 980-foot length of the AOI, the combined extraction rates are anticipated to range between100 and 800 gpm. Alternatively, the Construction Contractor may opt to dewater one section (see Section 2.1) at a time, in which case the flow rate is expected to range between 30 and 240 gpm.

5.2.2 Typical Dewatering Well Construction Details

The extraction wells, if needed, will be approximately 40 feet deep, screened from 10 to 40 feet below ground surface and will be constructed of six-inch schedule 40 polyvinyl chloride (PVC).[2] The 30-foot length screened interval is anticipated to provide sufficient drawdown for the water elevations that may be encountered during construction. Each well will be equipped with a dedicated, variable-rate pump; the extracted water will be pumped above ground to the treatment plant that is described in Section 6.0 prior to subsequent discharge. The wells shall be powered by a single, portable, trailered diesel-powered generator.

The trailered diesel-powered generator shall be installed on the Project overbank to avoid potential risks associated with rain events and any external fuel tanks will also be placed on the Project overbank. The Construction Contractor shall take necessary precautions that any wiring, conduit, or pipe connecting the generator(s) to the wells shall not be damaged by construction vehicles.

CONFORMED

[1] January 17, 2015 telephone conversation between Adam Medina, Viking Drillers, Inc. and Keith Hoofard, Tetra Tech

[2] Depth based on conversations with experienced personnel as referenced in footnote #1 on this page.

6.0 GROUNDWATER TREATMENT AND CONVEYANCE EQUIPMENT

A temporary treatment plant will treat groundwater that becomes exposed and, therefore, subsequently collected per Section 5, above.

As shown on Figure 4, the temporary groundwater treatment plant can be located within the channel, adjacent to the AOI, and effectively isolated from any nuisance flow within the channel, if necessary, through the use of berms, K-rails, or other features at the Construction Contractor's discretion. The Contractor shall provide ramp access as part of the overall construction effort. These ramps shall be available for access to the temporary groundwater treatment plant. As an alternative to the in-channel location of the treatment equipment, at the Contractor's discretion, the equipment can also be located along the top of the channel as long as it does not interfere with construction activities.

A process flow schematic is provided as Figure 5. Groundwater will be pumped from the cofferdam or dewatering wells to the open-top equalization tank to allow sediments to settle out of the groundwater. From the equalization tank, the groundwater will be pumped through a *filtration train* that includes sand filtration and organoclay filtration vessels. These will provide a "polish" to the sediment removal to prevent blockage prior to being pumped through the *treatment train* which will remove VOCs by adsorption within the granular activated carbon (GAC) vessels. The treated water will then flow to a second open-top batch tank for temporary storage (as needed) and to allow a controlled discharge rate to Berryessa Creek. The point of discharge will be at the outlet of the open-top batch tank.

The Construction Contractor shall have sufficient cranes, forklifts, trucks, and personnel onsite while working within the AOI to remove all equipment associated with the temporary groundwater treatment plant within 24 hours of notification of a pending rain event. Typical specifications for a 100 gallon per minute temporary treatment system and a 700 gallon per minute treatment system are provided as Attachments C and D, respectively.[1]

As shown on Figure 5, compliance-sampling ports will be located:

- after the final filter and before the first GAC vessel (INF-001);
- between the two GAC vessels (MID-001); and
- after the second GAC vessel, before mixing with any other water (EFF-001).

The treatment plant and extraction wells will be powered by portable diesel generators. The treatment plant and dewatering system may have to operate 24 hours per day, depending on treatment requirements dictated by the amount of groundwater flow at the time of construction. A photograph of a typical temporary groundwater treatment plant is provided as Attachment B for illustrative purposes. Note that the temporary groundwater treatment system that will likely be needed for the Project will be a smaller scale system compared to that shown in Attachment B.

CONFORMED

[1] NOTE: All equipment brands depicted herein shall be considered as "typical" and are provided for reference purposes, with "or equivalent" applicable to all equipment.

7.0 COMPLIANCE MONITORING

This section presents procedures for sampling the treated groundwater. The analytical results of the treatment system samples will be reported to the SFBRWQCB as described in Section 9.0.

7.1 Compliance Sampling

Compliance sampling will be performed on the first and fifth days of operation, and will consist of collecting groundwater samples from sampling port INF-001 (see Figure 5) and EFF-001 (see Figure 5) in accordance with Table E-2 of the SFBRWQCB Order; the pertinent information from this table is reproduced in Table 2 in the Tables Section following the report narrative.

7.1.1 Compliance Sampling: Day 1 of Operation

The objective of sampling the influent and effluent groundwater on the first day of operation is to confirm compliance with the discharge standards. Groundwater from the AOI shall not be discharged to Berryessa Creek until compliance with the discharge standards is demonstrated. Thus, the treated groundwater will be discharged to a holding tank for temporary storage to prevent discharge to Berryessa Creek until compliance with the discharge standards is demonstrated as described in the following sections. Furthermore, the groundwater control, diversion, and the Construction Contractor may opt to shut down dewatering activities until compliance is demonstrated to reduce the amount of storage needed. If the system is shut down for more than 120 hours, the compliance sampling shall be repeated. System shutdown to reduce the amount of storage needed shall only occur if no consequences to construction activities within the AOI nor seepage downstream will occur due to a high accumulation of groundwater exposure as a result of the shutdown. If these consequences may occur, then additional storage facilities must be made available to preclude untreated groundwater from migrating downstream.

An influent groundwater sample shall be collected from sampling port INF-001 (see Figure 5) on the first day of operation. This influent groundwater sample shall be monitored in the field for pH and submitted to a state-certified laboratory for analysis of VOCs by Environmental Protection Agency (EPA) Method 8260B.

An effluent groundwater sample shall be collected from sampling port EFF-001 (see Figure 5) on the first day of operation. This effluent groundwater sample shall be monitored in the field for turbidity, pH, temperature, and electrical conductivity and submitted to a state-certified laboratory for analysis of: VOCs by EPA Method 8260B and total dissolved solids (TDS) by SM 2540.

The laboratory analytical results from the startup groundwater samples collected on the first day of operation shall be compared to the effluent concentrations identified in Table 2 of the Order (Column B: Discharge to Other Surface Water Areas), which is reproduced in Table 3 in the Tables Section following the report narrative.

If all of the effluent analytical results are less than the maximum daily effluent limitations listed above, the treated groundwater shall be deemed to be in compliance, and discharge of the treated water to Berryessa Creek may commence. If any of the effluent analytical results exceed the maximum daily effluent limitations listed above, discharge of the treated groundwater shall not be allowed and startup sampling shall be repeated until compliance is demonstrated. At the Construction Contractor's discretion it may be appropriate to replace the GAC to achieve compliance with the discharge standards.

CONFORMED

7.1.2 Compliance Sampling: Day 5 of Operation

In accordance with the SFBRWQCB Order, the INF-001 and EFF-001 will be sampled on the fifth day of operation. An influent groundwater sample shall be collected from sample port INF-001, and monitored in the field for pH and submitted to a state-certified laboratory for analysis of VOCs by EPA Method 8260B.

An effluent groundwater sample shall be collected from sample port EFF-001, monitored in the field for turbidity, pH, temperature, and electrical conductivity, and submitted to a state-certified laboratory for analysis of:

- VOCs, EPA 8260B
- 1,4-dioxane, EPA 8270C
- total dissolved solids, SM 2540
- total (unfiltered) metals:
    - antimony, EPA 204.2 reporting limit 0.5 ug/L
    - arsenic, EPA 206.3 reporting limit 2.0 ug/L
    - beryllium, GFAA or ICPMS reporting limit 0.5 ug/L
    - cadmium, GFAA or ICPMS reporting limit 0.25 ug/L
    - hexavalent and total chromium, SM 3500 reporting limit 0.5 ug/L
    - copper, EPA 200.9 reporting limit 0.5 ug/L
    - cyanide, SM 4500-CN C or I reporting limit 1 ug/L
    - lead, EPA 200.9 reporting limit 0.5 ug/L
    - mercury, EPA 1631 reporting limit 0.002 ug/L
    - nickel, EPA 249.2 reporting limit 1 ug/L
    - selenium, SM 3114B or C reporting limit 0.5 ug/L
    - silver, EPA 272.2 reporting limit 0.25 ug/L
    - thallium, EPA 279.2 reporting limit 1 ug/L
    - zinc, EPA 200.8 reporting limit 1 ug/L

7.1.3 Discharge Monitoring

In accordance with the SFBRWQCB Order, the effluent discharge to Berryessa Creek will be monitored daily to verify that the discharge is not causing the following:

- Floating, suspended, or deposited macroscopic particulate matter or foam;
- Bottom deposits or aquatic growths to the extent that such deposits or growths cause nuisance or adversely affect beneficial uses;
- Alteration of temperature, turbidity, or apparent color beyond present natural background levels;
- Visible, floating, suspended, or deposited oil or other products of petroleum origin; and
- Toxic or other deleterious substances to be present in concentrations or quantities that will cause deleterious effects on aquatic biota, wildlife, or waterfowl, or which render any of these unfit for human consumption either at levels created in the receiving waters or as a result of biological concentration.

CONFORMED

Additionally, standard observations for the groundwater treatment system will be recorded on each day and will include observations of: odor, weather condition (wind direction and estimated velocity), deposits, discolorations, and/or plugging in the treatment system, and operation of the float and/or pressure shutoff valves to prevent system overflow. Any non-compliance with RWQCB standards for discharge will be rectified prior to continuation of treatment/discharge operations.

7.2 Media Breakthrough Monitoring

The GAC vessels shall be sampled a minimum of weekly to monitor for potential breakthrough. A sample will be collected from sample port MID-001 weekly and analyzed for VOCs by EPA Method 8260B to monitor for potential GAC breakthrough. If VOCs are detected in the MID-001 sample at concentrations that exceed the maximum daily effluent limitations identified in Table 4 in the Tables Section following the report narrative (Column B: Discharge to Other Surface Water Areas) of the SFBRWQCB Order, another sample will be immediately collected and analyzed to confirm the breakthrough. If breakthrough is confirmed, the GAC in the lead vessel will be replaced (see Section 3.0), the original lag vessel will become the lead vessel, and the newly replaced GAC will become the lag vessel.

8.0 MEDIA CHANGE-OUT PROCEDURES

The treatment system will be shut down to replace the spent GAC in the lead vessel. The need to stop the groundwater diversion or extraction during the GAC change-out will be evaluated based on the following: the current available volume to store diverted/extracted water in the equalization tank and the GAC Contractor's time estimate to remove the spent GAC and emplace the new GAC. The above ground extraction water piping will be reconfigured so the former second GAC vessel (lag vessel) becomes the lead vessel and the vessel with the replaced GAC becomes the lag vessel (second in the series).

The GAC Contractor will remove the GAC from the lead vessel after the water has been drained from the vessel. The Contractor will remove the GAC using a vacuum hose, containerize the spent material, and fill the vessel with new GAC. The spent GAC will be profiled for disposal by submitting a sample for analysis of total VOCs and for the Toxicity Characteristic Leaching Procedure (TCLP) for VOCs. The GAC Contractor will remove the spent GAC from the project area and regenerate and/or dispose of the spent GAC appropriately, depending upon whether the profile results exceed hazardous waste thresholds. (Reuse of the GAC would be up to the GAC Contractor but in no instance would it be reused at the Project site.) Hazardous waste thresholds for the chemicals of concern associated with the AOI are presented in Table 4 in the Tables Section following the report narrative.

The EPA regulations establish two ways of identifying solid wastes as hazardous under the Resource Conservation and Recovery Act (RCRA). A waste may be considered hazardous if it exhibits certain hazardous properties ("characteristics") or if it is included on a specific list of wastes EPA has determined are hazardous ("listing" a waste as hazardous) because EPA found the characteristics to pose substantial present or potential hazards to human health or the environment. EPA defines four hazardous waste characteristic properties: ignitability, corrosivity, reactivity, or toxicity. A waste is ignitable if it is:

- a liquid with a flash point of less than 140 degrees F using an approved flash point test,
- a non-liquid that can readily catch fire under standard temperature and pressure, and burns vigorously after ignition so as to create a hazard, and
- is an ignitable compressed gas or a Department of Transportation oxidizer.

CONFORMED

A waste is corrosive if it is:

- an aqueous waste with a pH of less than or equal to 2 or greater than or equal to 12.5, and
- a waste that can corrode steel at a rate of ¼ inch or more per year.

A material is a reactive hazardous waste if it is normally unstable, reacts violently with water, generates toxic gas if exposed to water or corrosive materials, or is capable of detonation if exposed to heat or flame.

A waste is determined to be hazardous based on the toxicity characteristic if a sample of the waste is subject to the TCLP for VOCs at a state-certified analytical laboratory and the results exceed the TCLP limits.

There are four different lists of hazardous wastes (40CFR 261), which are:

- **The F list (non-specific source wastes) –** contains waste from non-specific sources. This list includes solvents commonly used in degreasing, metal treatment baths and sludges, wastewaters from metal plating operations, and dioxin containing chemicals and their precursors.
- **The K list (source-specific wastes) –** designates particular solid wastes from certain specific industries. This listing includes descriptions that are very specific and clear such as wood preservation, pigment production, chemical production, petroleum refining, iron and steel production, explosive manufacturing, and pesticide manufacturing.
- **The P list and the U list (discarded commercial chemical products) –** contain discarded commercial products, off-spec chemicals, contain residues, and residues from chemical spills. The main differences between the two lists are the quantities of chemicals regulated.

It is the generator's responsibility to determine if the waste is a listed waste. The EPA defines a generator as "any person, by site, whose act or process produces hazardous waste identified or listed in part 261 of Title 40 of the Code of Federal Regulations (CFR)".

8.1 Hazardous Waste Disposal Site

Hazardous and non-hazardous waste will be disposed of in accordance with federal, state, and local regulations; the disposal facility will be selected by the contractor, subject to client approval.

CONFORMED

9.0 REPORTING

Any non-compliance releases and spills that may endanger health or the environment must be reported to the National Response Center (NRC)[1] as well as the SFBRWQCB, the Project Engineer, and the Santa Clara Valley Water District within 24 hours of becoming aware of the circumstance. A written submission of the non-compliance, if any, shall be uploaded to GeoTracker within five days of becoming aware of the circumstance.

All analytical results from the AOI will be submitted to the SFBRWQCB within 24 hours of receipt and uploaded to GeoTracker within five days.

[1] The NRC is the sole federal point of contact for reporting all hazardous substance spills and releases, including the VOCs found in the AOI. See their website for more information (http://www.nrc.uscg.mil/nrcrpttxt.htm. See also the reportable quantities promulgated by 40 CFR Part 302.4 and found in Table 302.4 of the following website: https://www.gpo.gov/fdsys/pkg/CFR-2011-title40-vol28/pdf/CFR-2011-title40-vol28-sec302-4.pdf

10.0 DEMOBILIZATION

The Construction Contractor will prepare a Rain Action Event Plan (REAP) meeting guidelines of the California Stormwater Quality Association best management practices for construction activities. The REAP will include detailed directions for removing equipment and materials from the channel if substantial rain is forecast. As noted in Section 6.0, the Construction Contractor shall have sufficient cranes, forklifts, trucks, and personnel onsite while working within the AOI to remove all equipment associated with the temporary groundwater treatment plant within 24 hours of notification of a pending rain event.

Prior to removing the treatment equipment from the Site, The sand filter media, organoclay from the organoclay filter, bag-filter sediment, and GAC from both the lead and lag vessels shall be sampled and analyzed by a state-certified laboratory for total VOCs and TCLP for VOCs for profiling purposes, as required prior to disposal at receiving facilities. The waste classification shall be determined based on the laboratory analytical results federal, state, and local regulations as described in Section 8.0. Hazardous waste thresholds for the chemicals of concern associated with the AOI are presented in Table 4.

Following the waste classification, the sand filter media, organoclay from the organoclay filter, bag-filter sediment, and GAC shall be removed from the respective vessels and transported offsite for lawful disposal. The GAC will be removed and either (1) regenerated and reused, or (2) disposed of off-site, depending whether the profiling results exceed hazardous waste thresholds.

Once the media have been removed, the piping of the components of the portable treatment plant will be disconnected and the individual components will be removed from the site using cranes, forklifts, and/or trucks, as appropriate. The aboveground components of the groundwater conveyance system and the connections to the portable treatment system will be reused by the Construction Contractor or disposed of as inert waste.

As mentioned in Section 4.0, if dewatering wells are installed to lower the water table as discussed in Section 5.0, the Construction Contractor will obtain all appropriate permits which can include permits and/or authorization from the Santa Clara Valley Water District for abandonment of the wells.

CONFORMED

11.0 HEALTH AND SAFETY OVERVIEW

The dewatering contractor and the contractor performing the groundwater extraction and treatment system operation and monitoring will be required to be Hazardous Waste Operations and Emergency Response (HAZWOPER) trained (40-hour training with 8-hour annual updates), in compliance with 29 CFR 1910.120. The contractors are required to prepare their own Health and Safety Plan (HASP) with Job Safety Analyses (JSAs) for each task. At a minimum, the HASP will identify the following:

- Key personnel, general safety guidelines and protocols
- Job hazards
- Training requirements
- Personal protective equipment and engineering controls
- Exposure monitoring plan
- Emergency first aid and decontamination procedures
- Standard operating procedures

12.0 REFERENCES

Arcadis, 2015a. *Semiannual Groundwater Monitoring Report, August 1, 2014 through January 31, 2015, Former JCI Jones Chemical Facility, 985 Montague Expressway, Milpitas, California.* February 27, 2015.

Arcadis, 2015b. Semiannual Groundwater Monitoring Report, February 1, 2015 through July 31, 2015, Former JCI Jones Chemical Facility, 985 Montague Expressway, Milpitas, California. August 31, 2015.

SFBRWQCB, 2015. Letter from Bruce Wolfe to Amanda Cruz. *Berryessa Creek Channel Modification Project, adjacent to the former JCI Jones Chemical Facility, 985 Montague Expressway, Milpitas, Santa Clara County.* August 14, 2015.

Tetra Tech, 2015a. HTRW Soil Sampling Report Including Two Groundwater Grab Samples, Upper Berryessa Creek Flood Risk Management Project Between Montague Expressway and Yosemite Drive, Santa Clara County, Milpitas, California.

Tetra Tech, 2015b. Geotechnical Appendix. Upper Berryessa Creek Flood Risk Management Project I-680 to Calaveras Boulevard Santa Clara County, Milpitas, California. November 24, 2015.

CONFORMED

TABLES

CONFORMED

Table 1
Volatile Organic Compound in Area of Interest Groundwater
Berryessa Creek Widening Project Groundwater Management Plan

Constituent	December 2014 & June 2015 Concentration Range (µg/L)	MCL (µg/L)	ESL (µg/L)
Tetrachloroethylene	2.6 – 1,400	5	5
Trichloroethylene	0.6 – 86	5	5
Trans-1,2-dichloroethylene	0.6 – 16	10	10
Cis-1,2-dichloroethylene	<0.5 – 110	6	6
1,1-dichloroethane	<0.5 – 13	5	5
1,1-dichlorethene	<0.5 – 29	6	6
Vinyl Chloride	0.3 – 3.4	0.5	0.5

Notes:
ESL = Environmental Screening Levels
MCL = Maximum Containment Level
SFBRWQCB = San Francisco Bay Regional Water Quality Control Board
µg/L = micrograms per liter

CONFORMED

Table 2
Extracted Groundwater Sampling Requirements
Berryessa Creek Widening Project Groundwater Management Plan

	Influent (INF-001)						Effluent (EFF-001)						
Parameter	**1st day**	**5th day**	**Monthly**	**Quarterly**	**Semiannually**	**Annually**	**1st day**	**5th day**	**Monthly**	**Quarterly**	**Semiannually**	**Annually**	**Once every 3 yrs**
Discharge Flow (gpm)							continuous	continuous	continuous	continuous	continuous	continuous	continuous
Fish Toxicity 96-hr % survival										x (1st yr)		x (after 1st yr)	
Standard Observations	x	x	x				x	x	x				
VOCs	x	x			x		x	x	x				
1,4-Dioxane								x			x		
Turbidity							x	x		x		x (after 1st yr)	
pH	x	x	x (1st yr)	x (2nd yr)		x (after 2nd yr)	x	x	x (1st yr)	x (2nd yr)		x (after 2nd yr)	
Total dissolved solids							x	x	x				
temperature							x	x	x (1st yr)	x (2nd yr)		x (after 2nd yr)	
Electrical conductivity							x	x	x (1st yr)	x (2nd yr)		x (after 2nd yr)	
Metals								x					x
Discharge Flow Volume									X				

Notes:
Standard Observation for Groundwater Treatment Systems include: odor; weather condition (wind direction and estimated velocity); deposits, discolorations, and/or plugging in the treatment system; operation of the float and/or pressure shutoff valves to prevent system overflow

CONFORMED

Table 3
Groundwater Treatment Standards
Berryessa Creek Widening Project Groundwater Management Plan

Compound	CAS Number	Discharge to Other Surface Water Areas	
		Average Monthly Effluent Limitation (µg/L)	Maximum Daily Effluent Limitation (µg/L)
Benzene	71432	---	5
Carbon Tetrachloride	56235	4.4	5
Chloroform	67663	---	5
1,1-Dichloroethane	75343	---	5
1,2-Dichloroethane	107062	---	5
1,1-Dichloroethylene	75354	3.2	5
Ethylbenzene	100414	---	5
Methylene Chloride	75092	---	5
Tetrachloroethylene (PCE)	127184	---	5
Toluene	108883	---	5
Cis 1,2-Dichloroethylene	156592	---	5
Trans 1,2- Dichloroethylene	156605	---	5
1,1,1-Trichloroethane	71556	---	5
1,1,2-Trichloroethane	79005	---	5
Trichloroethylene (TCE)	79016	---	5
Vinyl Chloride	75014	---	1
Total Xylenes	1330207	---	5
Methyl Tertiary Butyl Ether (MTBE)	1634044	---	5
Total Petroleum Hydrocarbons [TPHs (as gasoline or as diesel)]	---	---	50
Ethylene Dibromide (1,2-Dibromoethane)	106934	---	5
Trichloro- trifluoroethane	76131	---	5
Total Chlorine Residual	---	---	0.0[1]

Notes:
µg/L = micrograms per liter

[1] = There shall be no detectable levels of residual chlorine in the effluent (a non-detect result using a detection level equal or less than 0.08 milligram per liter (mg/L) will not be deemed to be out of compliance). This limit only applies to Dischargers that chlorinate their extracted groundwater.

CONFORMED

Table 4
Hazardous Thresholds for Granular Activated Carbon
Berryessa Creek Widening Project Groundwater Management Plan

Volatile Organic Compound	Regulatory Level (mg/L)
Benzene	0.5
Carbon Tetrachloride	0.5
Chlorobenzene	100
Chloroform	6.0
1,4-Dichlorobenzene	7.5
1,2-Dichloroethane	0.5
1,1-Dichloroethylene	0.7
Tetrachloroethylene	0.7
Trichloroethylene	0.5
Vinyl Chloride	0.2

Notes:
mg/L = milligram per liter

CONFORMED

[This page intentionally left blank]

CONFORMED

FIGURES

CONFORMED

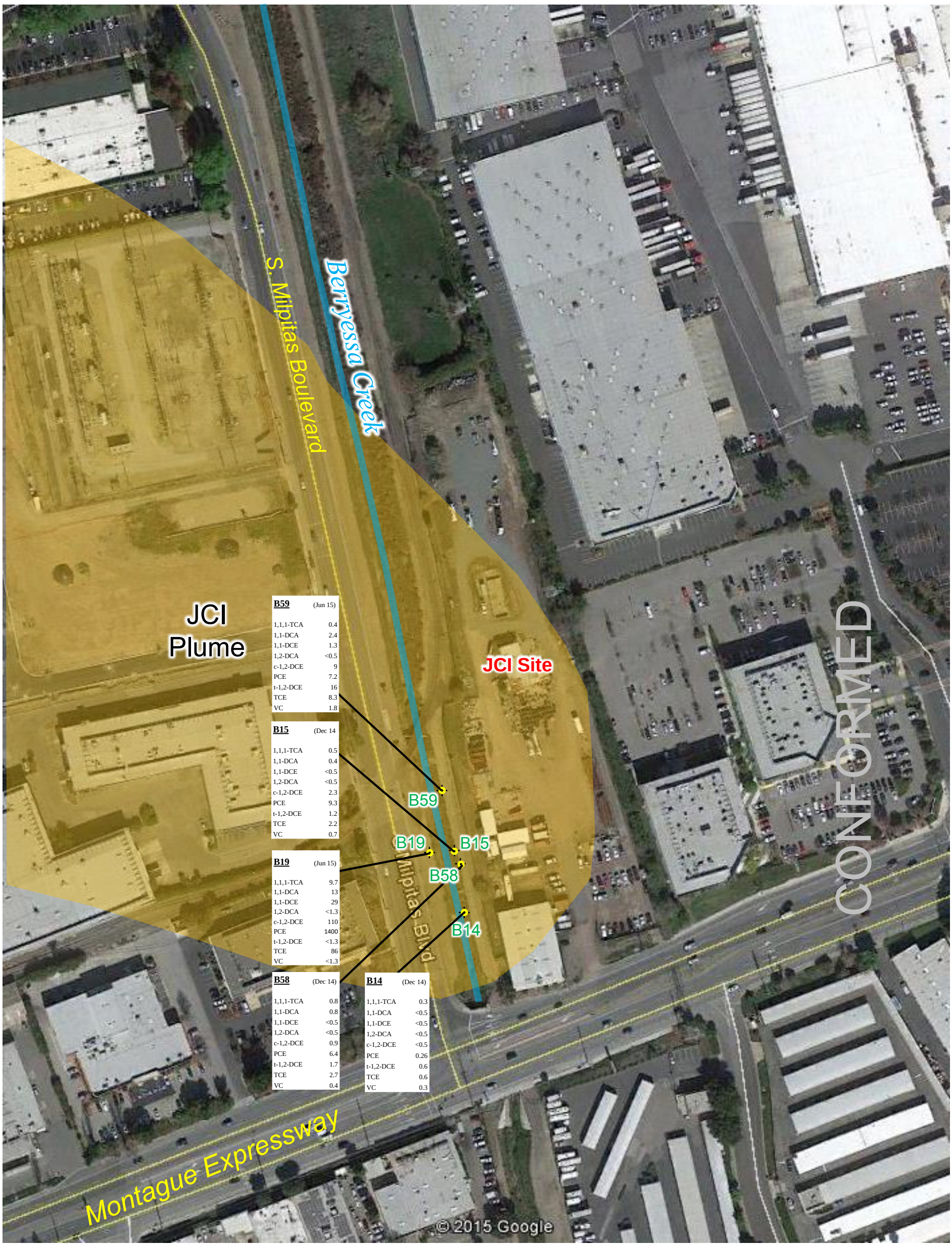

SOURCE: ***Google Earth Pro, February 23, 2014.***

B19 JCI shallow well (screened <40 feet bgs)

Approximate extent of JCI VOC Groundwater Plume

Location ID — **B14** (Dec 14) — Sample Date
Analyte — PCE 0.26 — Concentration (µg/L)

N

0 feet 150

Abbreviations:

1,1,1-TCA	1,1,1-Trichloroethane
1,1-DCA	1,1-Dichloroethane
1,1-DCE	1,1-Dichloroethene
1,2-DCA	1,2-Dichloroethane
c-1,2-DCE	cis-1,2-Dichloroethene
PCE	Tetrachloroethene
t-1,2-DCE	trans-1,2 Dichloroethene
TCE	Trichloroethene
VC	Vinyl Chloride

TITLE: **JCI Shallow Groundwater Plume**

LOCATION: **Upper Berryessa Creek FRMP**
Between Montague Expressway and Yosemite Drive
Milpitas, California

TETRA TECH

CHECKED:	IA	FIGURE:
DRAFTED:	KDH	1
FILE:	100-SWW-T31331	
DATE:	10-15-15	

URCE: *Google Earth Pro, February 23, 2014.*

N

0 feet 75

Area of Interest

Approximate extent of JCI VOC Groundwater Plume

TITLE:	**Area of Interest**
LOCATION:	**Upper Berryessa Creek FRMP** **Between Montague Expressway and Yosemite Drive** **Milpitas, California**

TETRA TECH

CHECKED:	IA	**FIGURE:**
DRAFTED:	KDH	**2**
FILE:	100-SWW-T31331	
DATE:	10-15-15	

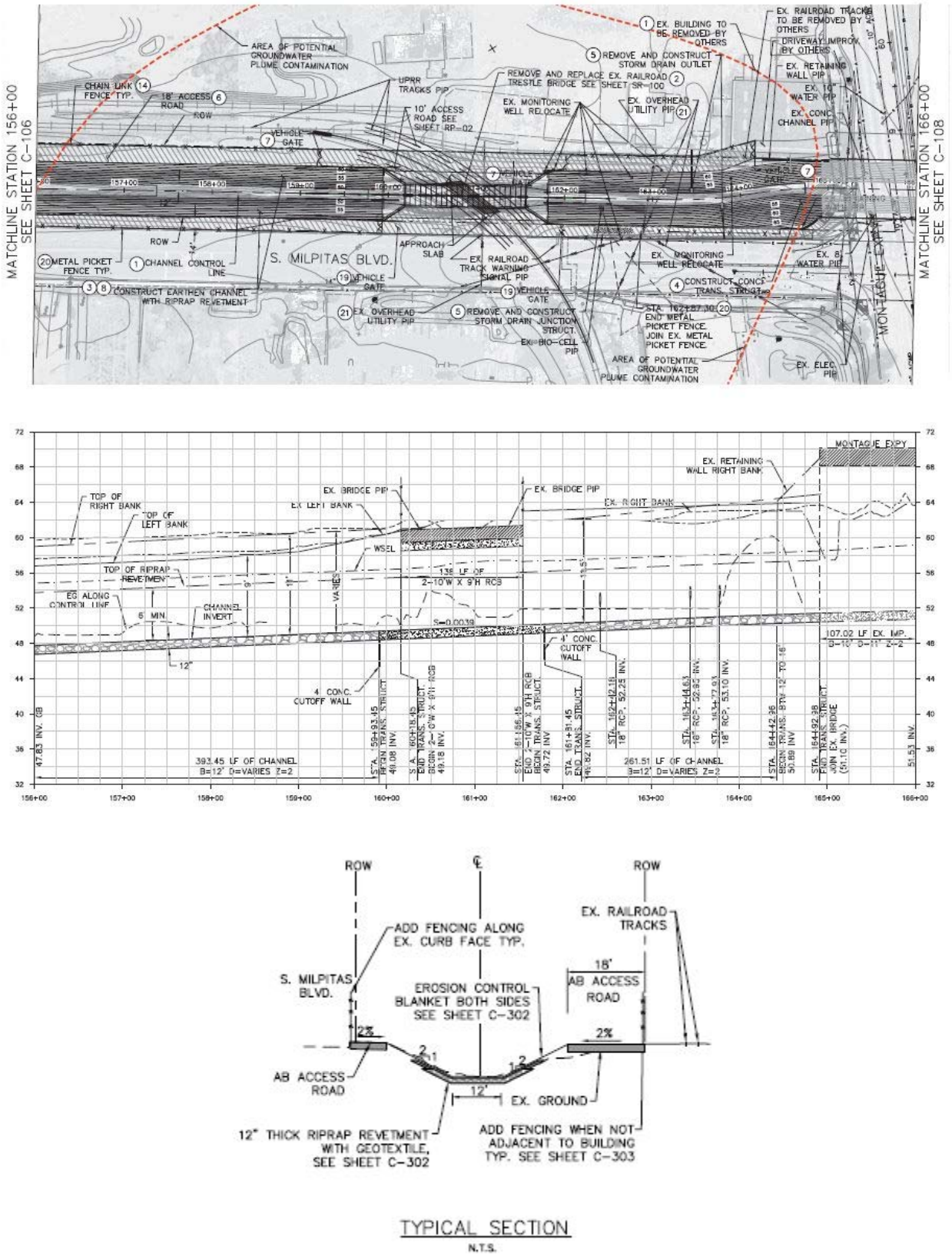

FIGURE 3. Proposed Project Construction Plans and Cross Section in the AOI

CONFORMED

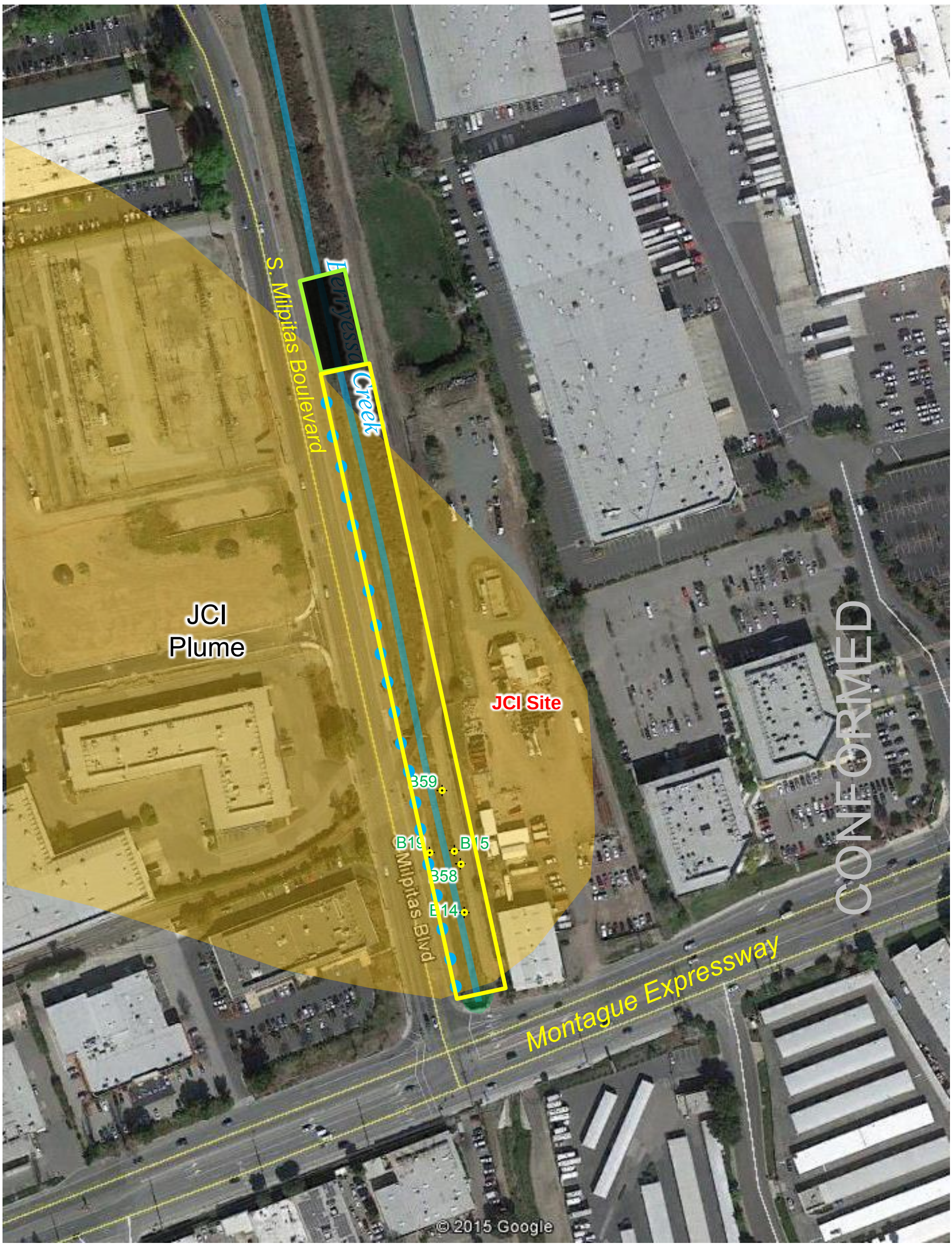

SOURCE: ***Google Earth Pro, February 23, 2014.***

Approximate location of shallow groundwater extraction well

B19 JCI shallow well (screened <40 feet bgs)

Approximate extent of JCI VOC Groundwater Plume

Area of Interest

Proposed Temporary Groundwater Treatment System Location

N

0 feet 150

TITLE: **Approximate Location of Shallow Groundwater Extraction Wells in AOI**

LOCATION: **Upper Berryessa Creek FRMP**
Between Montague Expressway and Yosemite Drive
Milpitas, California

TETRA TECH

CHECKED:	IA
DRAFTED:	KDH
FILE:	100-SWW-T31331
DATE:	10-15-15

FIGURE: **4**

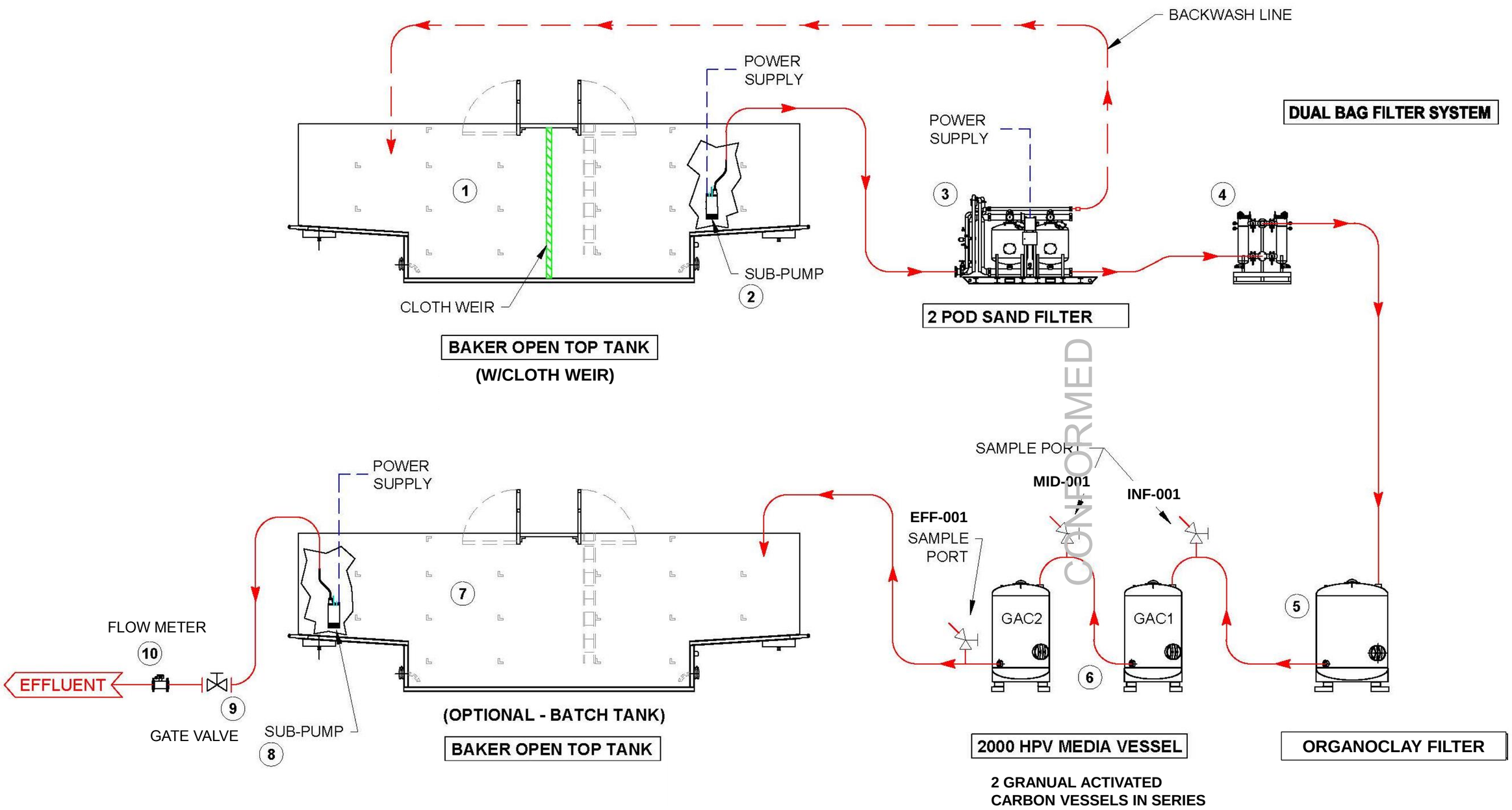

TITLE:	**Process Flow Schematic**
LOCATION:	**Upper Berryessa Creek FRMP** **Between Montague Expressway and Yosemite Drive** **Milpitas, California**

TETRA TECH

CHECKED:	SEP	FIGURE:
DRAFTED:	JAA	**5**
FILE:	100-SWW-T31331	
DATE:	10-30-15	

ATTACHMENTS

CONFORMED

Attachment A
SFBRWQCB Non-Enforcement Letter Dated August 14, 2015

CONFORMED

August 14, 2015
File No. 43S0065 (mej)

Amanda Cruz
San Francisco Planning Branch
US Army Corps of Engineers
1455 Market Street
San Francisco, CA
Amanda.B.Cruz@usace.army.mil

SUBJECT: Berryessa Creek Channel Modification Project, adjacent to the former JCI Jones Chemicals Facility, 985 Montague Expressway, Milpitas, Santa Clara County

Dear Ms. Cruz:

Thank you for meeting with Regional Water Board staff to discuss the upcoming creek channel modification project being conducted by the U.S. Army Corps. of Engineers and the Santa Clara Valley Water District. As we have discussed, the groundwater contaminant plume of volatile organic compounds (VOCs) originating from the former JCI Jones facility passes beneath passes beneath Berryessa Creek, immediately to the west of the former facility.

We understand that you will be working in the creek bed immediately adjacent to the former Jones site. As part of the construction, groundwater may be encountered. To manage groundwater that may be encountered during construction, a groundwater management plan will be developed that will include control and diversion of water, if necessary, using the most efficient means such as coffer dams, sump pumps, dewatering wells or other techniques. Any water that may be generated will be treated and discharged downstream or to a storm drain. The treatment standards for this discharge water will comply with those set forth in our NPDES General Permit (R2-2012-0012) for fuel and VOC impacted sites. However, you will not be obtaining an NPDES permit for this work. A copy of the groundwater management plan will be submitted to this agency for our review and comment.

Based on our understanding of the work outlined above and with the condition that the groundwater is treated to the standards described, we will not recommend enforcement for discharging without a permit.

The work in the creek bed will also include movement of soil/sediment as part of the construction activities. As discussed, there is no reason to believe shallow soil/sediment in the area adjacent to the former Jones facility is impacted. This being the case, no soil/sediment management plan is necessary for movement of the materials. In the case that impacted soil is encountered, it will be segregated and stockpiled for offsite disposal. We find this acceptable.

CONFORMED

If you have any questions, please contact Mark Johnson of my staff at (510) 622-2493 [e-mail mjohnson@waterboards.ca.gov].

Sincerely,

[Original digitally signed and furnished upon request;
does not transfer as PDF copy]

Bruce H. Wolfe
Executive Officer

cc: Ira Artz, Ira.Artz@tetratech.com
Susan Glendening, susan.glendening@waterboards.ca.gov
Tim Gaffney, JCI Jones Chemicals, Inc. tgaffney@jcichem.com
Chuck Pardini, Arcadis Chuck.Pardini@arcadis-us.com

CONFORMED

Attachment B
Photograph of Typical Temporary Groundwater Treatment Plant

CONFORMED

Attachment C
Typical Specifications for a 100 Gallon Per Minute Temporary Groundwater Treatment Plant

NOTE: All equipment brands depicted herein shall be considered as "typical" and are provided for reference purposes, with "or equivalent" applicable to all equipment.

CONFORMED

PRODUCT DATA SHEET

January, 2007

2" DUPLEX BAG FILTER SYSTEM

GENERAL INFORMATION

Two independent filter housings are skid-mounted and piped such that one filter unit is active while the other is out of service. Inlet and outlet connections are provided on each end of the skid. Use for filtering a wide range of industrial and commercial process fluids, groundwater discharge from construction sites, stormwater or urban runoff.

WEIGHTS AND MEASURES

» Capacity:	50 - 110 gpm per filter when clean (depends on filter media micron rating)
» Design Pressure:	150 psi
» Design Temp:	140°F max.*
» Height:	4'-9" (overall)
» Width :	4'-8"
» Length:	5'-8"
» Weight:	550 lbs. (approx.)

SKID DESIGN

» Outer Frame:	6 x 8.2 A36 carbon steel channel
» Inter. Frame:	2"x2 "x3/16" A36 carbon steel angle
» Filter Housing Pad:	15 x 33.9 A36 carbon steel channel
» Forklift Pockets:	Through front and rear framing channels
» Cover:	Expanded metal grating
» Lifting Eyes:	All four corners

*Practical limit for the PVC header piping. Unit could be used up to 225°F if carbon steel piping is used instead.

FILTER DESIGN

» Filter Housing	Rosedale model 8-30-2F-2-150-C-B-S-PB
» Top Cover:	Three eyenuts; hinged for easy access
» Piping:	2" schedule 80 PVC (inlet and outlet headers)
» Inlet & Outlet:	2" 150# ANSI flanges
» Cover Seal:	Buna N (Nitrile) o-ring
» Housing Material:	Carbon Steel
» Filter Basket:	30" deep, 6.7" diameter, 4.4 sq. ft. surface area, 1000 cu. in. volume, 9/64" dia holes (51% open)
» Filter Media:	Filter bags, size #2. Wide range of micron ratings is available, down to 1.0.
» Vent Valves:	1/4" ball valve on top cover
» Drain Valves:	1" ball valve on the bottom of each housing

SURFACE DETAILS

» Exterior Coating:	High gloss polyurethane

TESTS / CERTIFICATIONS

» Test Performed:	Scheduled QMS inspections

CONFORMED

BAKERCORP™

To the best of our knowledge the technical data contained herein are true and accurate at the date of issuance and are subject to change without prior notice. No guarantee of accuracy is given or implied because variations can and do exist. NO WARRANTY OR GUARANTEE OF ANY KIND IS MADE BY BAKERCORP, EITHER EXPRESSED OR IMPLIED.

3020 Old Ranch Parkway • Suite 220 • Seal Beach, CA • 562-430-6262

ITEM	DESCRIPTION
1	Rosedale Model 8302F2150CBS-PB Bag Filter, all welded construction, carbon steel wetted parts; Design Pressure: 150 psi; Design Temperature: 400°F; Filter Basket: 304 SS, 4.4 sq. ft. area, 9/64" dia. holes (51% open).
2	Expanded metal grating
3	Mounting skid with forklift pockets
4	1" bottom drain
5	2" PVC piping

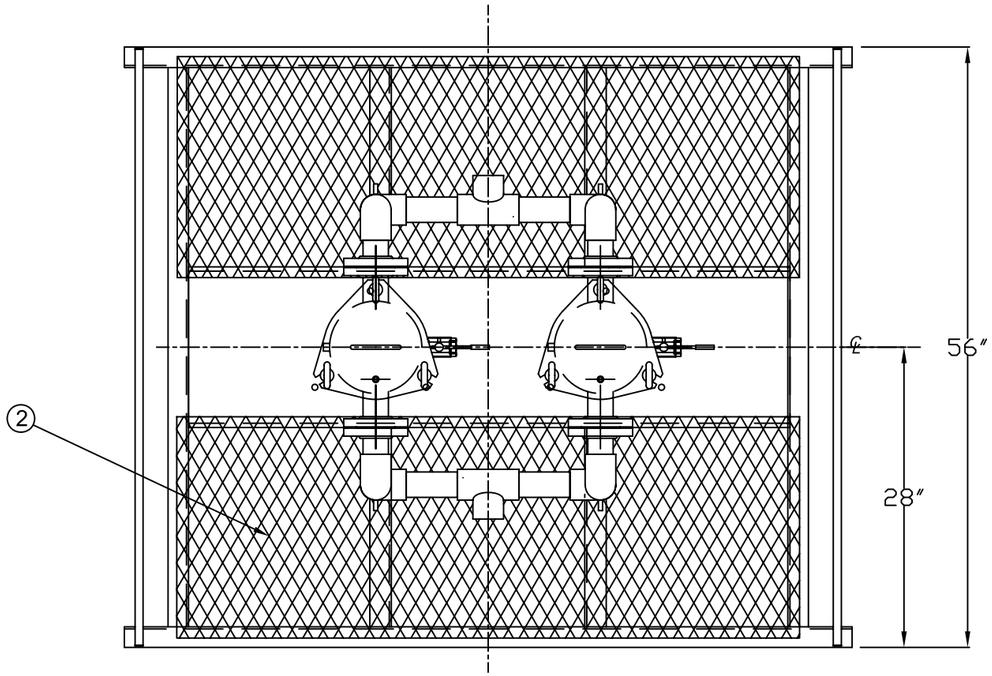

TOP VIEW

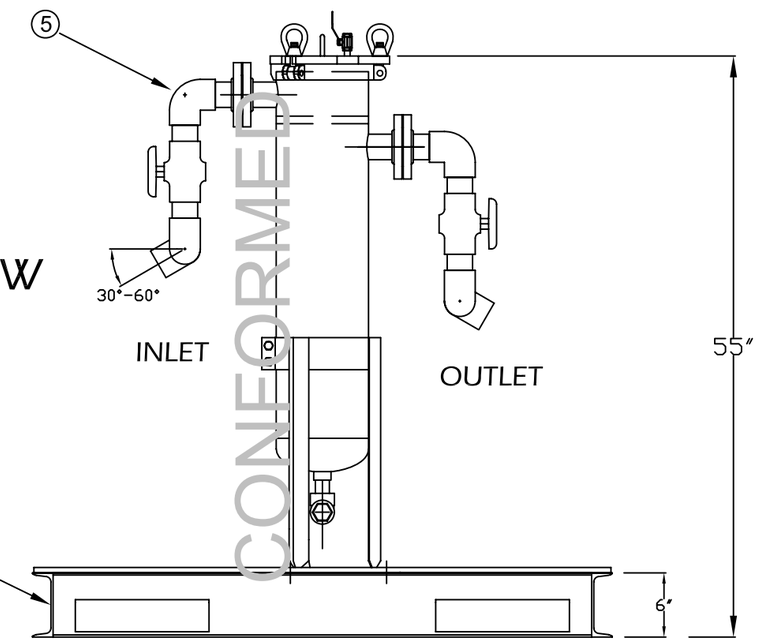

SIDE VIEW

CONFORMED

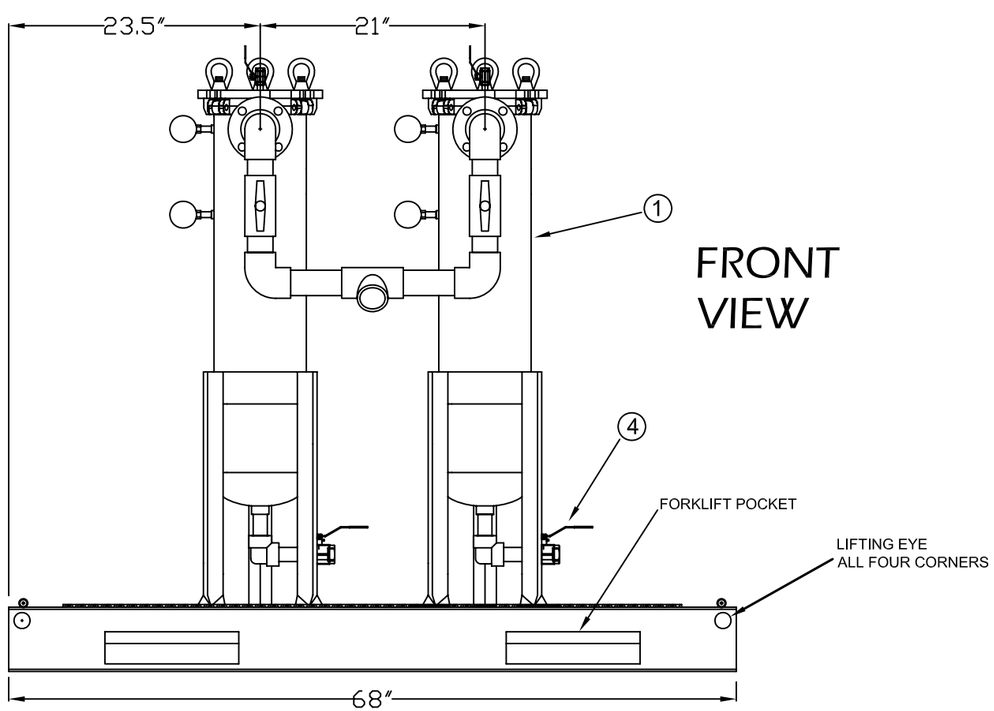

FRONT VIEW

The information contained herein is proprietary to BakerCorp and shall not be reproduced or disclosed in whole or in part, or used for anydesign or manufacture except when user obtains direct written authorization from BakerCorp.

BAKERCORP™
3020 OLD RANCH PARKWAY
SEAL BEACH, CA 90740-2751

REV.	DESCRIPTION	DATE	BY
G			
F			
E			
D			
C			
B			
A	Changed drawing title	2/18/05	PJB

SCALE: To Scale	SIZE B	ORIGINAL DWG. DATE 18AUG03
DRAWN BY: P.J.B.	APPROVED BY: –	CAT/CLASS ––
TITLE 2" BAG FILTER UNIT		SHEET 1 OF 1
DRAWING NO. S-9-M0010-1-		REV. A

OC Organoclay/Carbon Blend

BakerCorp's OC series filtration media is available for liquid phase applications and is a blend of "R 8x30" activated carbon and "Z-200" modified zeolite (often referred to as organoclay). This carbon/organoclay mixture is ideal for the filtration of oil and grease from contaminated water. This media also has some catalytic abilities to adsorb anions such as chromate, selenate, sulfate, hydrocarbons (such as Benzene, Toluene, and Xylene), heavy metals (such as lead and cadmium), and various petroleum products (such as oil) from aqueous waste streams.

ORGANOCLAY PHYSICAL PROPERTIES:

Cation Exchange Capacity:	2.20 meq/g
Bulk Density (lbs./cu.ft.):	58
Hardness (Mohs Scale):	5.1
Pore Size:	4.0 A
Specific Surface Area:	40 sq. m/g
Thermal Stability:	1,202 F
Crushing Strength:	2,500 lbs/sq inch
Blended Bulk Density (lbs./cu. Ft.)	44

These specifications represent general parameters and are subject to change. Please consult with BakerCorp before proceeding with your application.

CONFORMED

4306 W. 190th Street, Torrance, California 90504
Phone: 310.303.3700 ♦ Fax: 310.406.3001

PRODUCT DATA SHEET

January, 2007

KLEEN.WATER 1000HPV & 2000HPV

GENERAL INFORMATION

These units are designed for the efficient purification of contaminated water or liquid streams. These filters have the ability to remove contaminants to non-detectable levels. The vessels are constructed of heavy-duty mild steel and are lined with a double-layer epoxy coating.

WEIGHTS AND MEASURES

» Max. Flowrate:	*1000HPV:* 80 gpm *2000HPV:* 100 gpm
» Max. Pressure:	75 psi
» Max. Temp:	150°F
» Height:	*1000HPV:* 70″ *2000HPV:* 96″
» Diameter:	48″
» Shipping Wt*: (drum + media) (*Media dependent)	1000HPV: 2050 lbs. – 3050 lbs. 2000HPV: 3100 lbs. – 5100 lbs.

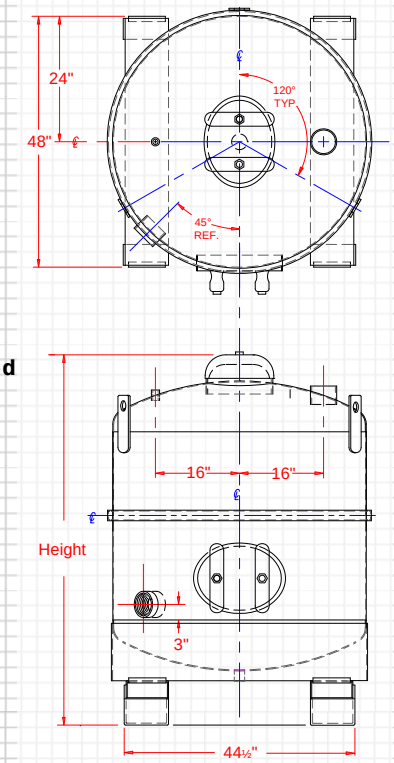

Downflow operation is recommended

FILTER MEDIA

» Types:	▪Activated Carbon ▪Organoclay ▪Ion Exchange Resin ▪Specialty Media
» Volume:	*1000HPV:* 34 cu. ft. *2000HPV:* 68 cu. ft.
» Weight*: (*Media dependent)	*1000HPV:* 1000 lbs. – 2000 lbs. *2000HPV:* 2000 lbs. – 4000 lbs.

MISCELLANEOUS

» Inlet:	4″ FNPT
» Outlet:	4″ FNPT
» Interior Coating:	Double-layered epoxy coating
» Internals:	PVC underdrain
» Media Access:	Top & side 12″x16″ manways (neoprene gaskets)

PRESSURE DROP DATA

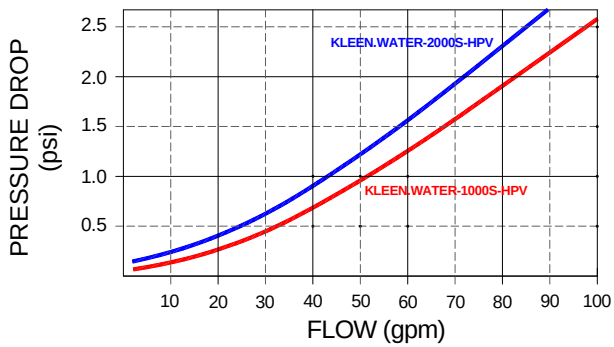

CONFORMED

NOTE:

1. Wet activated carbon preferentially removes oxygen from air. In closed or partially closed containers and vessels, oxygen depletion may reach hazardous levels. If workers are to enter a vessel containing carbon, appropriate procedures for potentially low oxygen spaces must be followed, including all federal and state requirements.

BAKERCORP™

To the best of our knowledge the technical data contained herein are true and accurate at the date of issuance and are subject to change without prior notice. No guarantee of accuracy is given or implied because variations can and do exist. NO WARRANTY OR GUARANTEE OF ANY KIND IS MADE BY BAKERCORP, EITHER EXPRESSED OR IMPLIED.

3020 Old Ranch Parkway • Suite 220 • Seal Beach, CA • 562-430-6262

TSURUMI PUMP

LB - SERIES

SEMI-VORTEX - DEWATERING PUMP

SPECIFICATIONS

FEATURES

1. Semi-vortex Urethane Rubber or high chrome cast iron impeller solids and allows for pumping of sand and stringy material.

2. Highly efficient, continuous duty air filled, copper wound motor with class E, insulation minimizes the cost of operation.

3. Built in thermal protection prevents motor failure due to overloading, accidental run-dry and single phasing in three phase units.

4. Double inside mechanical seals with silicon carbide faces running in an oil filled chamber provide for one the most durable seal designs available.

5. Double shielded, permanently lubricated, high temperature C3 ball bearings rated for a B-10 life of 60,000 hours provide for extended operational life.

6. Model LB-480A & LB-800A Automatic Submersible pump performs like the non-automatic version in every aspect of construction site usage requiring a tough and durable pump

7. Slime design allows pumps fit Into 8” pipes. (Manual type only)

APPLICATIONS

1. Residential, commercial, industrial wastewater and site drainage.

2. Decorative waterfalls and fountains.

3. Raw water supply from lakes or rivers.

4. Sediment removal from small sumps or basins.

Intertek

OIL LIFTER EQUIPPED

CONFORMED

SPECIFICATIONS

Discharge Size	2 - 3 "Npt (50 - 80 mm)
Horsepower Range	1/2 - 2Hp. (0.40 - 1.5kW)
Performance Range Capacity	15.9 - 111.0 GPM. (0.06 - 0.42 m^3/min)
Head	13.1 Ft. - 68.9 Ft. (4.0 - 18.9 m)
Maximum water temperature	104^0 F. (40^0 C.)
Materials of Construction	
Casing	Butadiene Rubber + Natural Rubber + Steel [LB(T)-1500]
Impeller	Urethane Rubber , High Chrome Cast Iron [LB(T)-1500]
Shaft	403 Stainless Steel
Motor Frame	Aluminum alloy
Fasteners	304 Stainless Steel
Mechanical Seal	Silicon Carbide
Elastomers	NBR (Nitrile Butadiene Rubber)
Impeller Type	Semi-vortex, solids handling.
Solids Handling Capability	0.236” (6.0mm)
Bearings	Prelubricated, Double Shielded
Motor Nomenclature	
Type, Speed, Hz.	Air Filled, 3600 Rpm, 60 Hz.
Voltage, Phase	115 / 230V., 1 Phase 230 / 460 / 575V., 3 Phase
Insulation	Class E, B
Accessories	Submersible Power Cable 32 - 50' (10 - 15m)
Operational Mode	Manual , Automatic(LB-480A / 800A)

OPTIONS

Length as Required,

TS-301 Float Switch

TSURUMI PUMP

LB - SERIES
SEMI-VORTEX - DEWATERING PUMP

PERFORMANCE CURVE

MODEL	BORE	HP	KW	RPM	SOLIDS DIA	LIQUID	SG.	VISCOSITY	TEMP.
LB(Z)-800(A)-61	2"/50mm	1	0.75	3300	0.236"/6mm	Water	1.0	1.123 cSt.	60°F

PUMP TYPE	PHASE	VOLTAGE	AMPERAGE	HZ	STARTING METHOD	INS. CLASS
Semi-Vortex - Dewatering Pump	Single	115-120 / 230	9.6-9.2 / 5.1	60	Capacitor Start	E

CURVE No.	DATE	PHASE	VOLTAGE	AMPERAGE	HZ	STARTING METHOD	INS. CLASS
-	-	-	-	-	-	-	-

REMARKS:

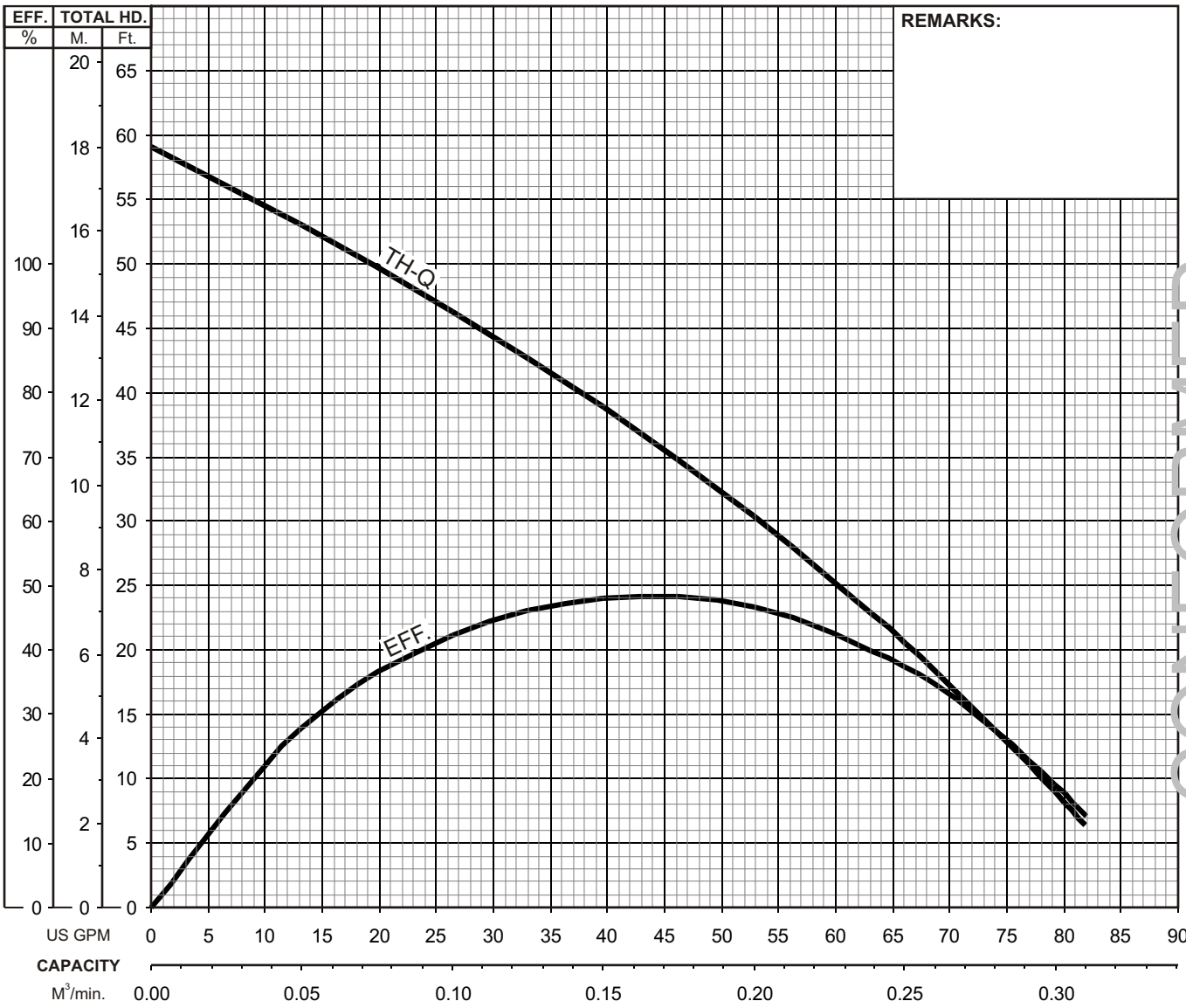

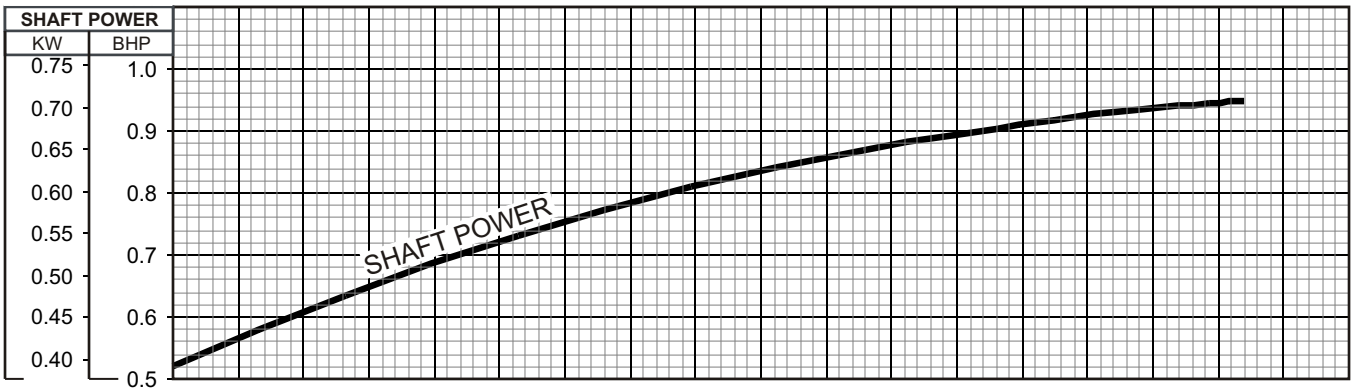

CONFORMED

TSURUMI PUMP

LB - SERIES
SEMI-VORTEX - DEWATERING PUMP

DIMENSIONS

LB-800-61
LBT-800-61

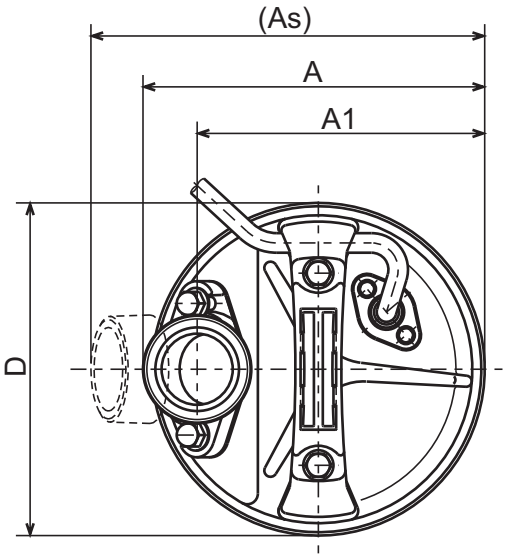

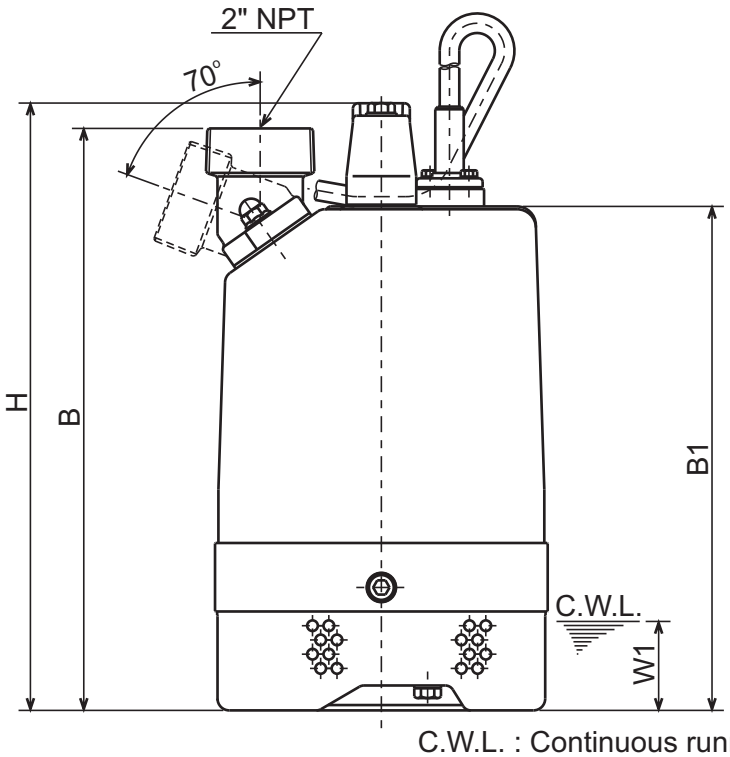

C.W.L. : Continuous running Water Level

DIMENSIONS:USCS (Inch)

Model	HP	NOM. SIZE	Pump & Motor							C.W.L.	Wt.
			A	As	A1	B	B1	D	H	W1	(lbs.)
LB-800-61	1	2"	7 9/16	8 11/16	6 3/8	12 7/8	11 1/8	7 3/8	13 7/16	2	29
LBT-800-61	1	2"	7 9/16	8 11/16	6 3/8	12 7/8	11 1/8	7 3/8	13 7/16	2	28

DIMENSIONS:METRIC (mm)

Model	kW	NOM. SIZE	Pump & Motor							C.W.L.	Wt.
			A	As	A1	B	B1	D	H	W1	(kg)
LB-800-61	0.75	50	192	221	162	327	283	187	341	50	13.2
LBT-800-61	0.75	50	192	221	162	327	283	187	341	50	12.8

CONFORMED

TSURUMI PUMP

LB - SERIES
SEMI-VORTEX - DEWATERING PUMP

PERFORMANCE CURVE

MODEL	BORE	HP	KW	RPM	SOLIDS DIA	LIQUID	SG.	VISCOSITY	TEMP.
LB-1500-60	3"/80mm	2	1.5	3480	0.236"/6mm	Water	1.0	1.123 cSt.	60°F

PUMP TYPE	PHASE	VOLTAGE	AMPERAGE	HZ	STARTING METHOD	INS. CLASS
Semi-Vortex Dewatering Pump	Single	110/115/120, 230	27.1/26.2/27.0, 13.2	60	Capacitor Start	B

CURVE No.	DATE	PHASE	VOLTAGE	AMPERAGE	HZ	STARTING METHOD	INS. CLASS
-	-	-	-	-	-	-	-

REMARKS:

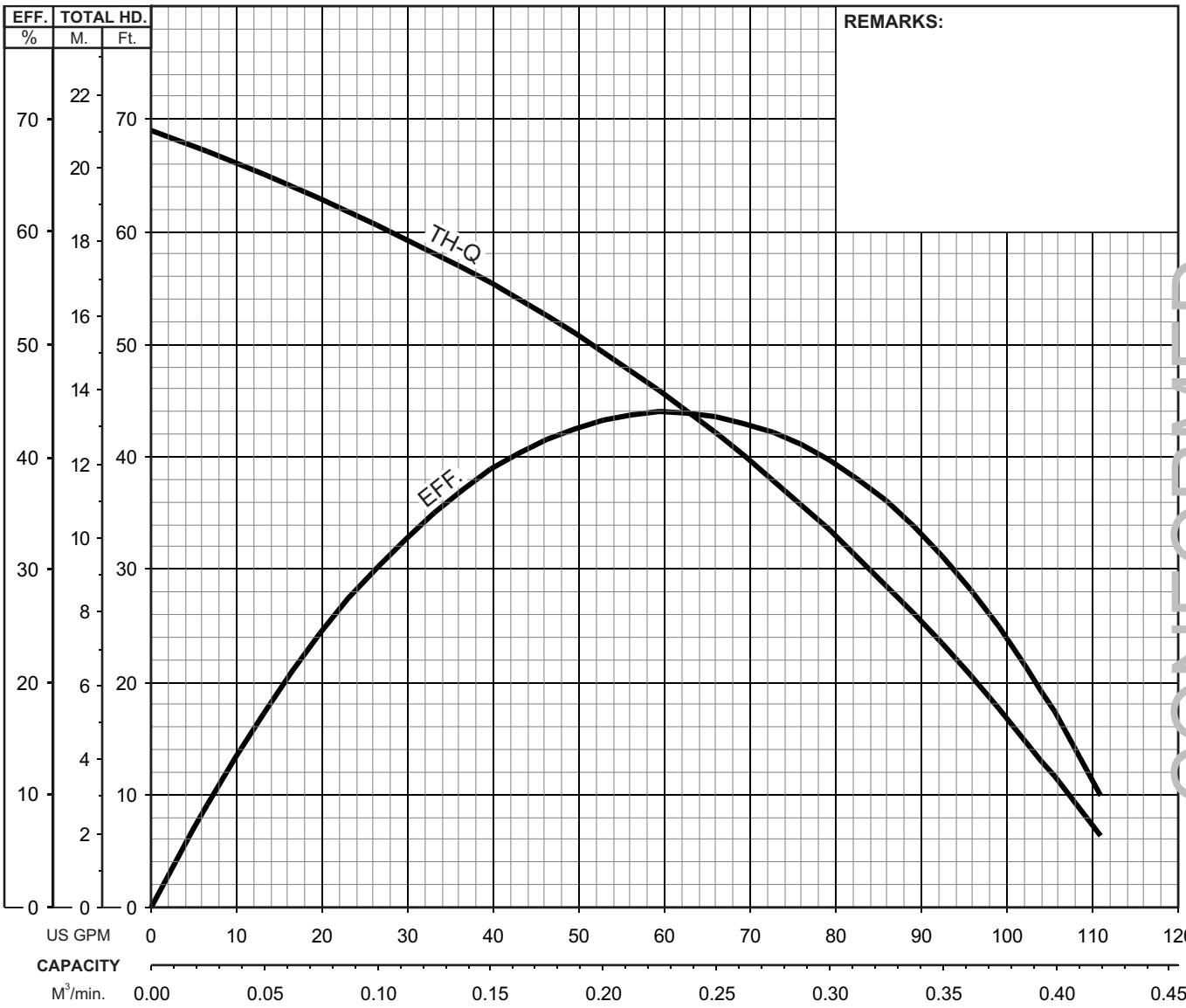

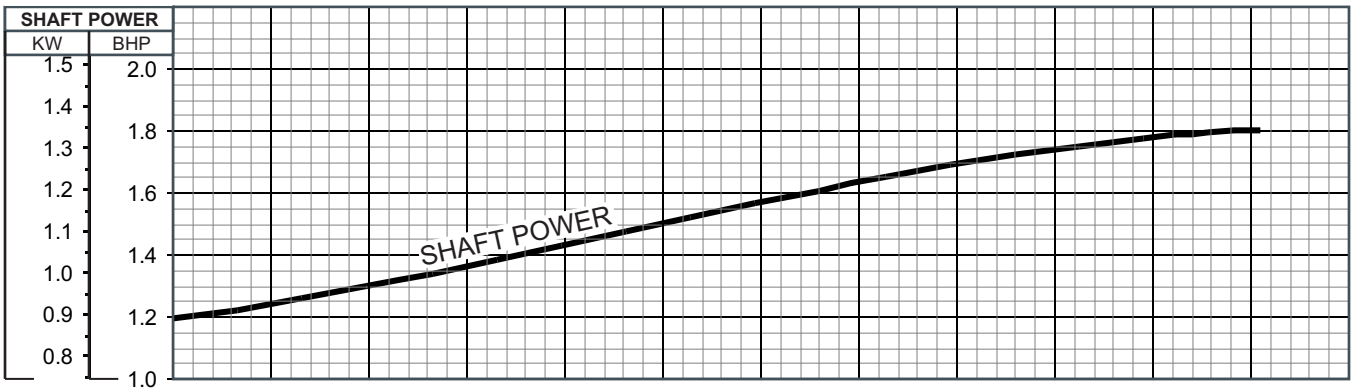

CONFORMED

TSURUMI PUMP

LB - SERIES
SEMI-VORTEX - DEWATERING PUMP

DIMENSIONS

LB-1500-60
LBT-1500-60

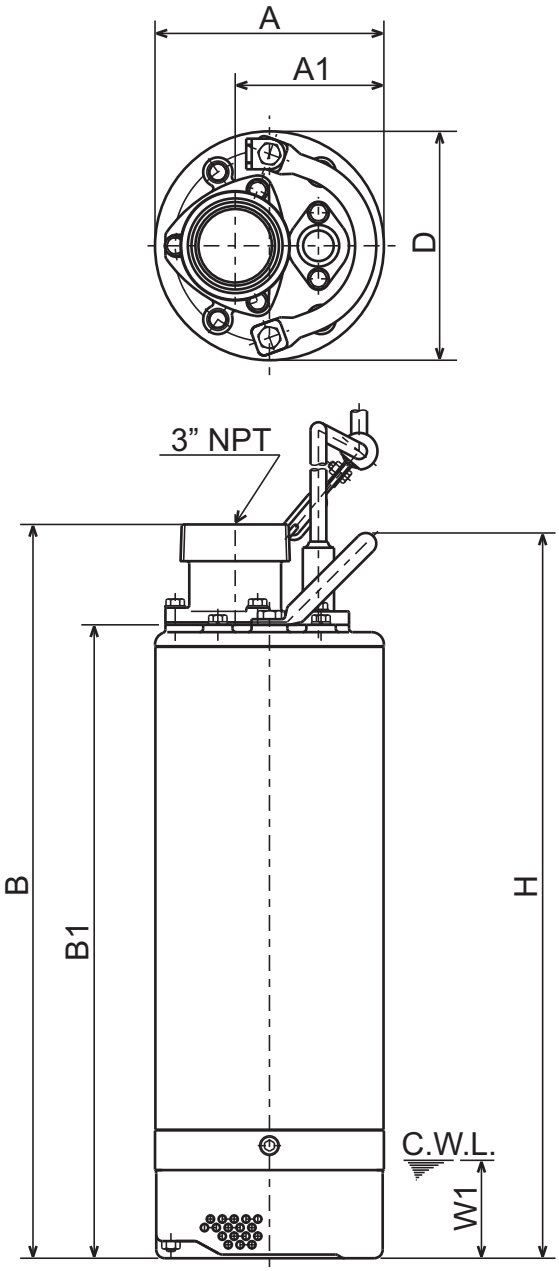

C.W.L. : Continuous running Water Level

DIMENSIONS:USCS (Inch)

Model	HP	NOM. SIZE	Pump & Motor						C.W.L.	Wt.
			A	A1	B	B1	D	H	W1	(lbs.)
LB-1500-60	2	3"	7 3/8	4 13/16	23 5/8	20 3/8	7 3/8	23 5/16	3 1/8	72
LBT-1500-60	2	3"	7 3/8	4 13/16	23 5/8	20 3/8	7 3/8	23 5/16	3 1/8	70

DIMENSIONS:METRIC (mm)

Model	kW	NOM. SIZE	Pump & Motor						C.W.L.	Wt.
			A	A1	B	B1	D	H	W1	(kg)
LB-1500-60	1.5	80	187	122	600	518	187	593	80	32.5
LBT-1500-60	1.5	80	187	122	600	518	187	593	80	32.0

CONFORMED

TSURUMI PUMP

HS - SERIES

SEMI-VORTEX - WASTEWATER PUMP - WITH AGITATOR

SPECIFICATIONS

FEATURES

1. Semi-vortex Urethane Rubber impeller with agitator suspends solids and allows for pumping of sand and stringy material.

2. Highly efficient, continuous duty air filled, copper wound motor with class E, insulation minimizes the cost of operation.

3. Built in thermal protection prevents motor failure due to overloading, accidental run-dry and single phasing in three phase units.

4. Double inside mechanical seals with silicon carbide faces running in an oil filled chamber provide for one the most durable seal designs available.

5. Double shielded, permanently lubricated, high temperature C3 ball bearings rated for a B-10 life of 60,000 hours provide for extended operational life.

HSZ : HS series dewatering pump is available in an automatic Type with simple float switch.

HSD : Single Phase compact pump fit for use in slurry dewatering in foundation works.

APPLICATIONS

1. Residential, commercial, industrial wastewater and site drainage.

2. Decorative waterfalls and fountains.

3. Raw water supply from lakes or rivers.

4. Sediment removal from small sumps or basins.

Intertek

OIL LIFTER EQUIPPED

CONFORMED

SPECIFICATIONS

Discharge Size	2 - 3 "Npt (50 - 80 mm)
Horsepower Range	1/2 - 1Hp. (0.40 - 0.75kW)
Performance Range Capacity	13.2 - 61.0 GPM. (0.05 - 0.23 m^3/min)
Head	13.1 Ft. - 62.0 Ft. (4.0 - 18.9 m)
Maximum water temperature	104^0 F. (40^0 C.)
Materials of Construction	
Casing	Cast Iron , Ductile Cast Iron(HSD)
Impeller	Urethane Rubber , High Chrome Cast Iron(HSD)
Shaft	403 Stainless Steel
Motor Frame	Aluminum alloy
Fasteners	304 Stainless Steel
Mechanical Seal	Silicon Carbide
Elastomers	NBR (Nitrile Butadiene Rubber)
Impeller Type	Semi-vortex, solids handling.
Solids Handling Capability	0.276 - 0.393" (7.0 - 10.0mm)
Bearings	Prelubricated, Double Shielded
Motor Nomenclature	
Type, Speed, Hz.	Air Filled, 3600 Rpm, 60 Hz.
Voltage, Phase	115 / 230V., 1 Phase
Insulation	Class E
Accessories	Submersible Power Cable 20 - 32' (6.2 - 10m)
Operational Mode	Manual , Automatic(HSZ)

OPTIONS

Length as Required,

TS-301 Float Switch

TSURUMI PUMP

HS - SERIES
SEMI-VORTEX - WASTEWATER PUMP

PERFORMANCE CURVE

MODEL	BORE	HP	KW	RPM	SOLIDS DIA	LIQUID	SG.	VISCOSITY	TEMP.
HS(Z)3.75S-61	3"/80mm	1	0.75	3408	0.276"/7.0mm	Water	1.0	1.123 cSt.	60°F

PUMP TYPE	PHASE	VOLTAGE	AMPERAGE	HZ	STARTING METHOD	INS. CLASS
Semi-Vortex - Wastewater Pump	Single	110/115/120, 230	10.0 / 9.6 / 9.4 , 4.6	60	Capacitor Start	E

CURVE No.	DATE	PHASE	VOLTAGE	AMPERAGE	HZ	STARTING METHOD	INS. CLASS
-	-	-	-	-	-	-	-

REMARKS:

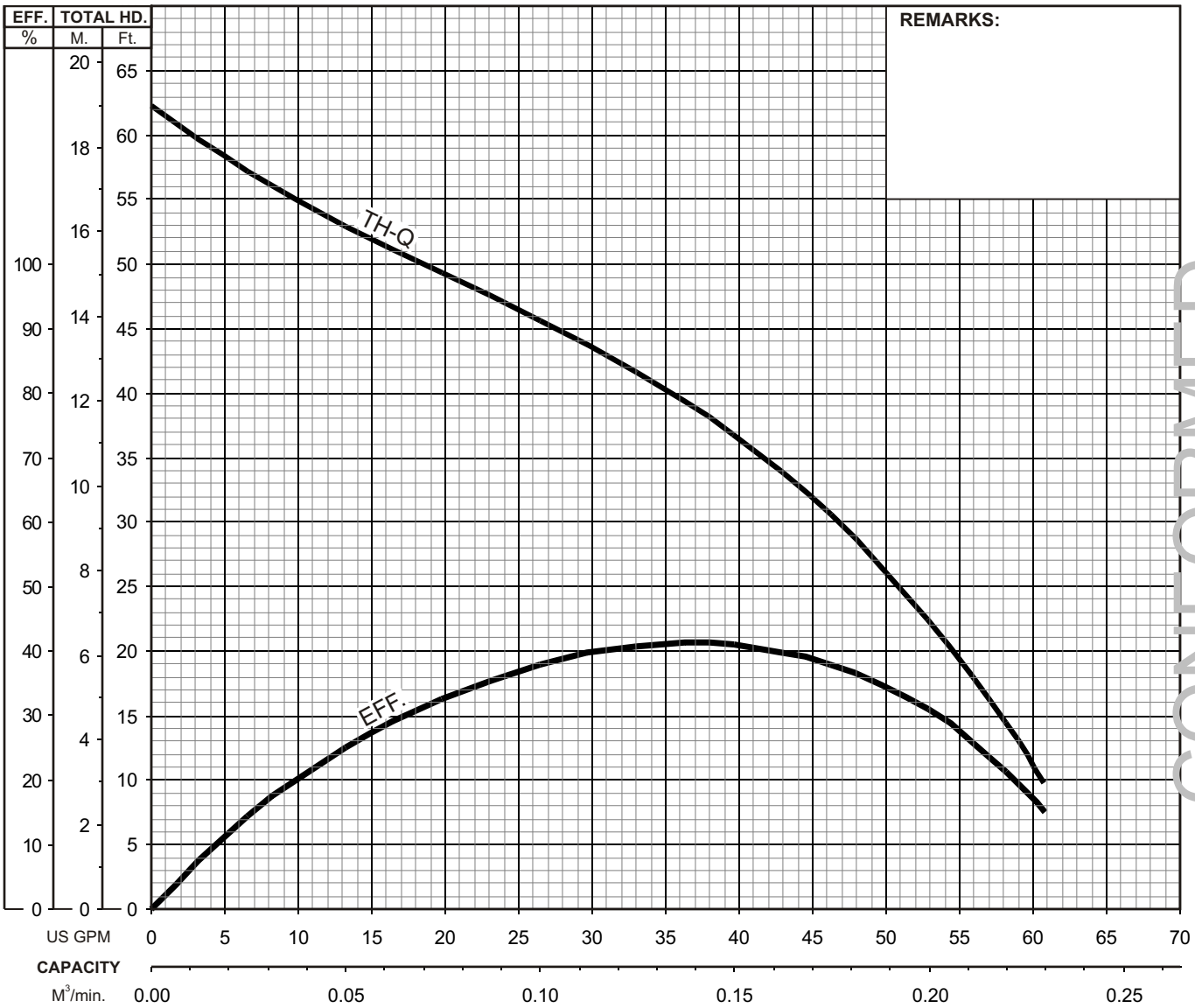

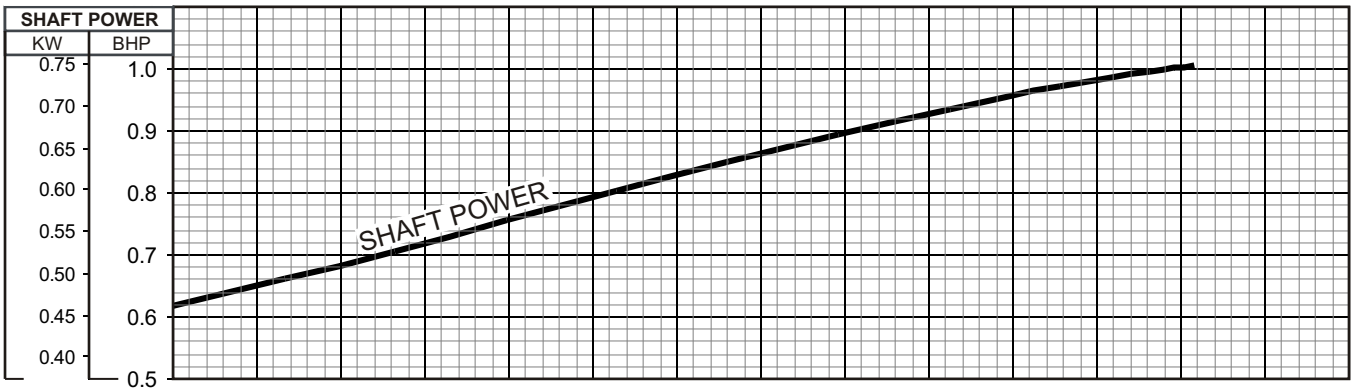

CONFORMED

TSURUMI PUMP

HS - SERIES
SEMI-VORTEX - WASTEWATER PUMP

DIMENSIONS

HS2.75S-61
HS3.75S-61

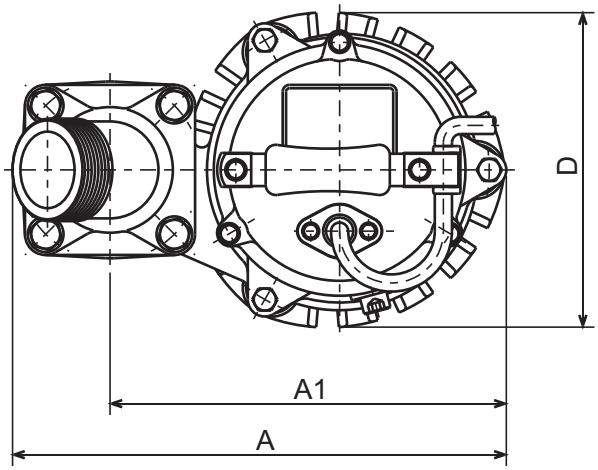

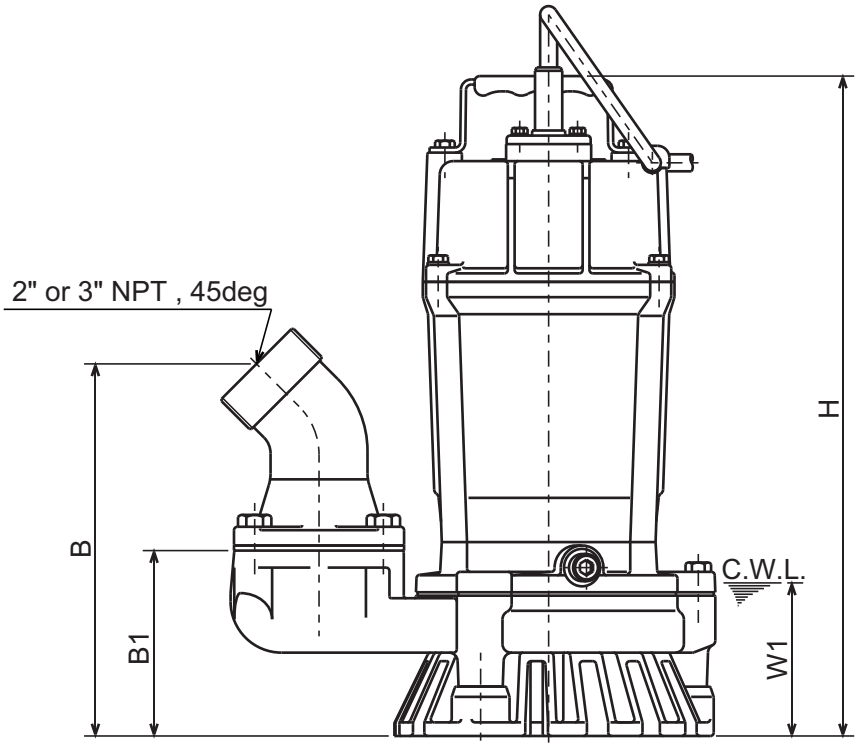

C.W.L. : Continuous running Water Level

DIMENSIONS:USCS (Inch)

Model	HP	NOM. SIZE	Pump & Motor						C.W.L.	Wt. (lbs.)
			A	A1	B	B1	D	H	W1	
HS2.75S-61	1	2"	11 7/16	9 3/16	8 5/8	4 5/16	7 5/16	15 1/4	3 1/2	40
HS3.75S-61	1	3"	12 7/16	9 3/16	9 1/2	4 5/16	7 5/16	15 1/4	3 1/2	42

DIMENSIONS:METRIC (mm)

Model	kW	NOM. SIZE	Pump & Motor						C.W.L.	Wt. (kg)
			A	A1	B	B1	D	H	W1	
HS2.75S-61	0.75	50	290	233	219	109	185	388	90	18.2
HS3.75S-61	0.75	80	317	233	241	109	185	388	90	19.0

CONFORMED

TSURUMI PUMP

NK - SERIES
SEMI-VORTEX - DEWATERING PUMP

SPECIFICATIONS

FEATURES

1. Double inside mechanical seals with silicon carbide faces, running in an oil filled chamber and further protected by a lip seal running against a replaceable, stainless steel shaft sleeve, provides for the most durable seal design available.

2. Highly efficient, continuous duty air filled, copper wound motor with class B, insulation minimizes the cost of operation.

3. Built in thermal & amperage sensing, protector prevents motor failure due to overloading or accidental run dry conditions.

4. Double shielded, permanently lubricated, high temperature C3 ball bearings rated for a B-10 life of 60,000 hours, extend operational life.

5. Top discharge, flow-thru design enables operation at low water levels for extended periods.

Sand Kit : NK2-15SK / NK2-22SK
The Sand Kit can be added to the NK series to suspend sand and prevent sand lock.

APPLICATIONS

1. Residential, commercial, industrial wastewater and construction site drainage.

2. Effluent transfer.

3. Decorative waterfalls and fountains.

4. Raw water supply from rivers or lakes..

OIL LIFTER EQUIPPED

Intertek

CONFORMED

SPECIFICATIONS	STANDARD	OPTIONS
Discharge Size	3" Npt (80 mm)	
Horsepower Range	2 ~ 3 Hp. (1.5 ~ 2.2 kW)	
Performance Range Capacity	55.5 ~ 211.0 GPM. (0.21 ~ 0.80 m^3/min)	
Head	34.4 ~ 85.0 Ft. (10.50 ~ 25.91 m)	
Maximum water temperature	104^0 F. (40.0^0 C.)	
Materials of Construction		
Casing	Butadiene Rubber + Natural Rubber , Cast Iron (NK2-22L)	
Impeller	Ductile Cast Iron , High Chrome Cast Iron (NK2-22L , NK2-15SK/22SK)	
Shaft	420 , 403 Stainless Steel	
Motor Frame	Aluminum alloy	
Fasteners	304 Stainless Steel	
Mechanical Seal	Silicon Carbide	
Elastomers	NBR (Nitril Butadiene Rubber)	
Impeller Type	Semi-vortex, solids handling.	
Solids Handling Capability	0.334” (8.5mm)	
Bearings	Prelubricated, Double Shielded	
Motor Nomenclature		
Type, Speed, Hz.	Air Filled, 3600 Rpm, 60 Hz.	
Voltage, Phase	110/220 V., 1 Ph (NK2-15 Dual Voltage)	
Insulation	Class B	
Accessories	Submersible Power Cable 32' (10.0 m)	Length as Required
Operational Mode	Manual	TS-301 Float Switch

TSURUMI PUMP

NK - SERIES
SEMI-VORTEX - DEWATERING PUMPS

PERFORMANCE CURVE

MODEL	BORE	HP	KW	RPM	SOLIDS DIA	LIQUID	SG.	VISCOSITY	TEMP.
NK2-22L	3"/80mm	3	2.2	3465	0.334"/8.5mm	Water	1.0	1.123 cSt.	60°F

PUMP TYPE	PHASE	VOLTAGE	AMPERAGE	HZ	STARTING METHOD	INS. CLASS
Semi-Vortex - Dewatering Pump	Single	220	13.0	60	Capacitor Start	B

CURVE No.	DATE	PHASE	VOLTAGE	AMPERAGE	HZ	STARTING METHOD	INS. CLASS
-	-	-	-	-	-	-	-

REMARKS:

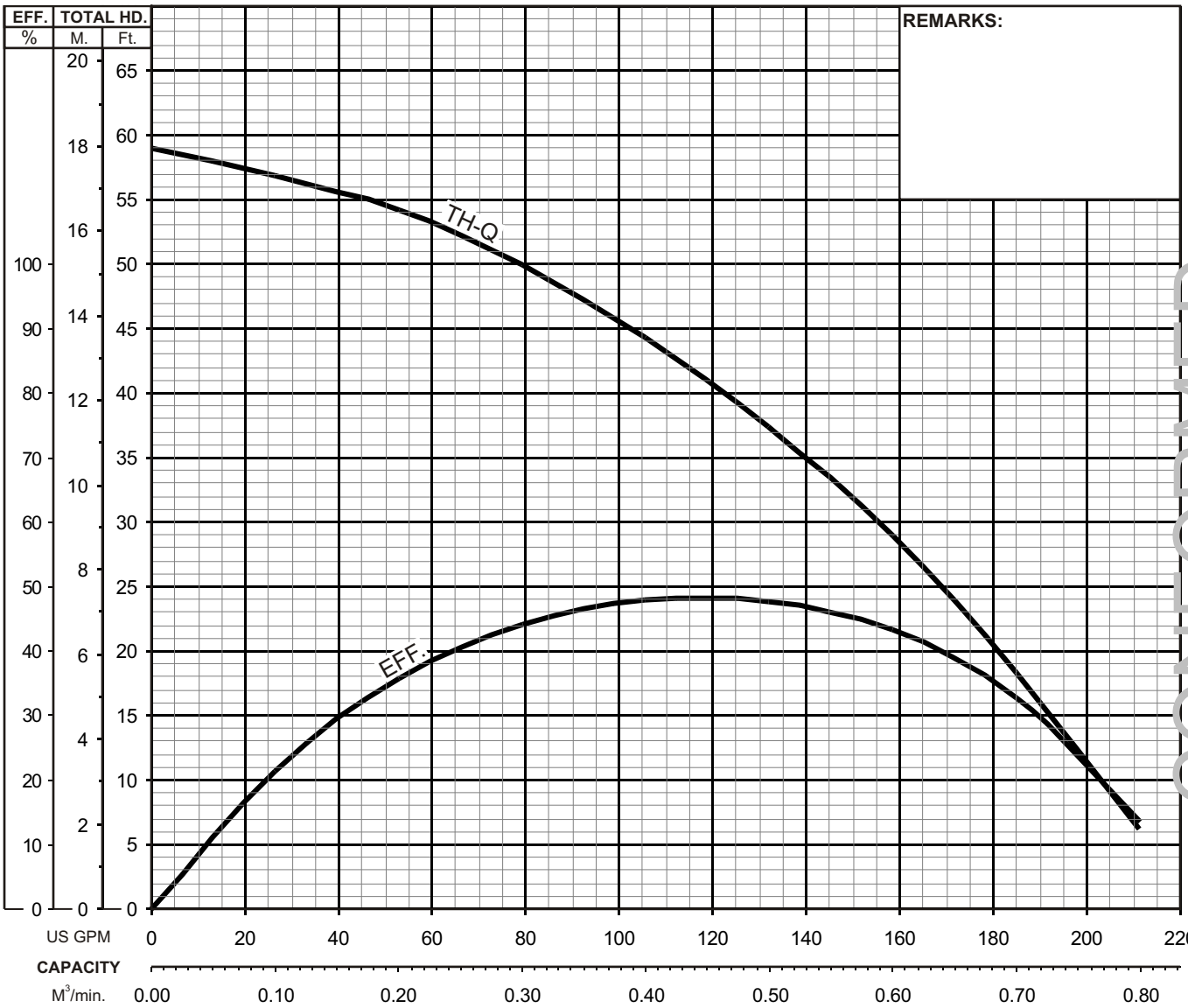

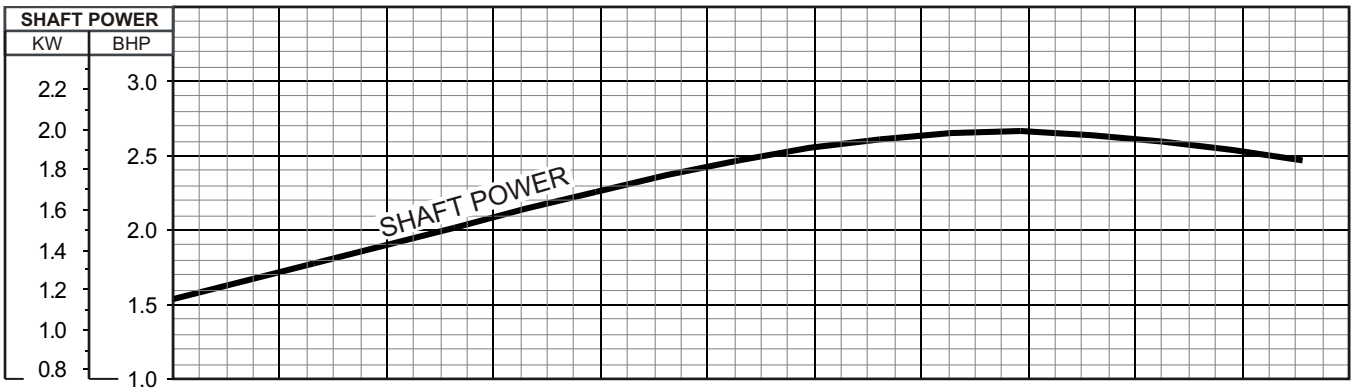

CONFORMED

TSURUMI PUMP

NK - SERIES
SEMI-VORTEX - DEWATERING PUMPS

DIMENSIONS

NK2-22L

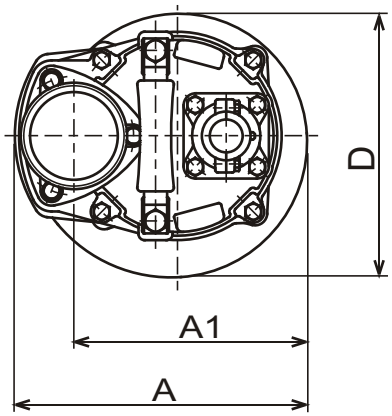

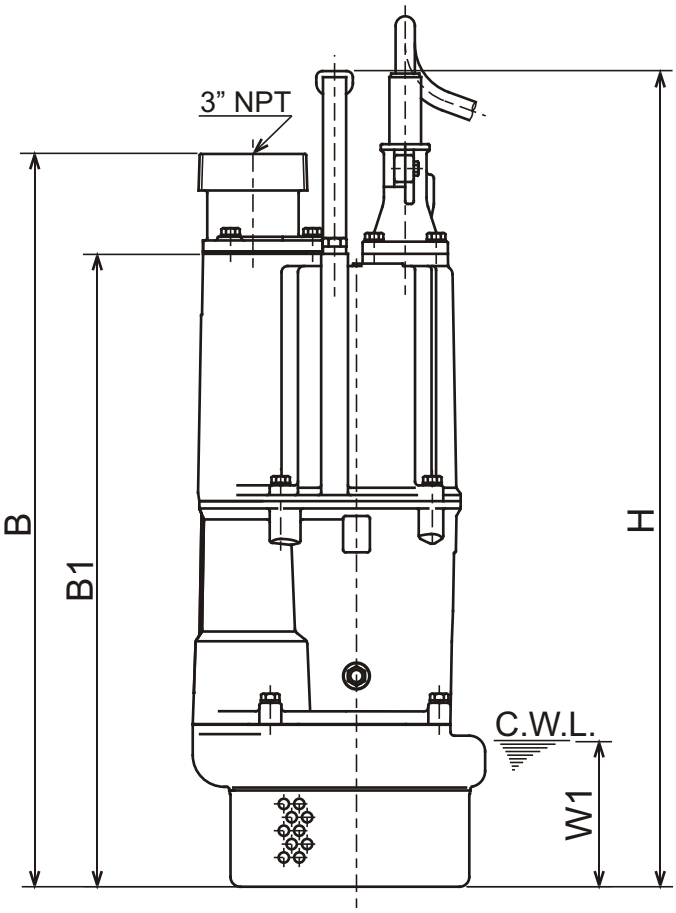

C.W.L. : Continuous running Water Level

DIMENSIONS:USCS (Inch)

Model	HP	NOM. SIZE	Pump & Motor						C.W.L.	Wt.
			A	A1	B	B1	D	H	W1	(lbs.)
NK2-22L	3	3"	9 1/4	7 1/2	23 5/8	20 3/8	8 1/2	26 1/2	4 3/4	73

DIMENSIONS:METRIC (mm)

Model	kW	NOM. SIZE	Pump & Motor						C.W.L.	Wt.
			A	A1	B	B1	D	H	W1	(kg)
NK2-22L	2.2	80	235	192	601	519	216	669	120	33.0

CONFORMED

PRODUCT DATA SHEET
January, 2007

EZ CLEAN TANK

GENERAL INFORMATION

Vapor tight steel tank with two sealed top access hatches and pressure/vacuum relief valve. Smooth interior walls for easy cleaning.

WEIGHTS AND MEASURES

» Capacity:	500 BBL (21,000 gal.)
» Height:	12′-4″
» Width :	8′-0″
» Length:	37′-6″ (40′-0″ incl. stairway)
» Weight:	26,000 lbs.

STRUCTURAL DESIGN

» Floor:	¼" thick ASTM A36 carbon steel, "V" shaped bottom
» Sides/Ends:	¼″ thick ASTM A36 carbon steel
» Roof Deck:	¼″ thick ASTM A36 carbon steel
» Wall Frame:	4″x4″ steel tubing (on exterior of wall surfaces)
» Floor Frame:	4″x4″ steel tubing (on exterior of floor surface)
» Roof Frame:	4″x4″ steel tubing (on exterior of roof surface)
» Internal Cross Bracing:	(3) - 2" sch. 80 pipes
» Skid Rails:	4″ x 4″ steel tubing

FEATURES

» Valves:	Typically 1-4″ butterfly valve on front end and1-6″ butterfly valve on rear end
» Relief Valve:	16 oz./in^2 pressure setting, 0.4 oz./in^2 vacuum setting; Buna-N seal
» Roof Piping Connection:	1-4″ 150# flanged (blinded) connection, driver side on rear end
» Misc. Pipe Connections:	Typically 1-4″ nipple with cap on front end below poop deck and 1-2″ collar with plug on top deck

FEATURES – cont.

» Top Access Hatches:	2-30″x45″ hinged vapor-proof hatches
» Hatch and Manway Seals:	Neoprene gasket
» End Manway:	1-20″ diameter end hatch (front end)
» Exterior Stairway:	Rear end of tank – lower section folds for extension and retraction
» Guardrails:	Around top deck; fold-down
» Internal Ladder:	Nearest manhole to stairway
» Bottom Sump:	One on each end of tank, either flat bottomed, 12″ diameter, 3″ deep, or domed, 14″ diameter, 4″ deep
» Level Gauge:	Ball float style, 2-8″ 304 SS floats
» Rear Wheels:	Removable dolly (not a fixed axle)

SURFACE DETAILS

» Exterior Coating:	High Gloss Polyurethane
» Interior Coating:	Chemical resistant coating (SS float balls are not coated)
» Safety Paint:	Safety yellow on all moveable safety equipment, handrails, stairs etc.

TESTS/CERTIFICATIONS

» Test Performed:	Major repairs – hydrotest Scheduled- Level I, II and III inspections, including NESHAP testing

CONFORMED

BAKERCORP™

To the best of our knowledge the technical data contained herein are true and accurate at the date of issuance and are subject to change without prior notice. No guarantee of accuracy is given or implied because variations can and do exist. NO WARRANTY OR GUARANTEE OF ANY KIND IS MADE BY BAKERCORP, EITHER EXPRESSED OR IMPLIED.

3020 OLD RANCH PARKWAY • SUITE 220 • SEAL BEACH, CA • 562-430-6262

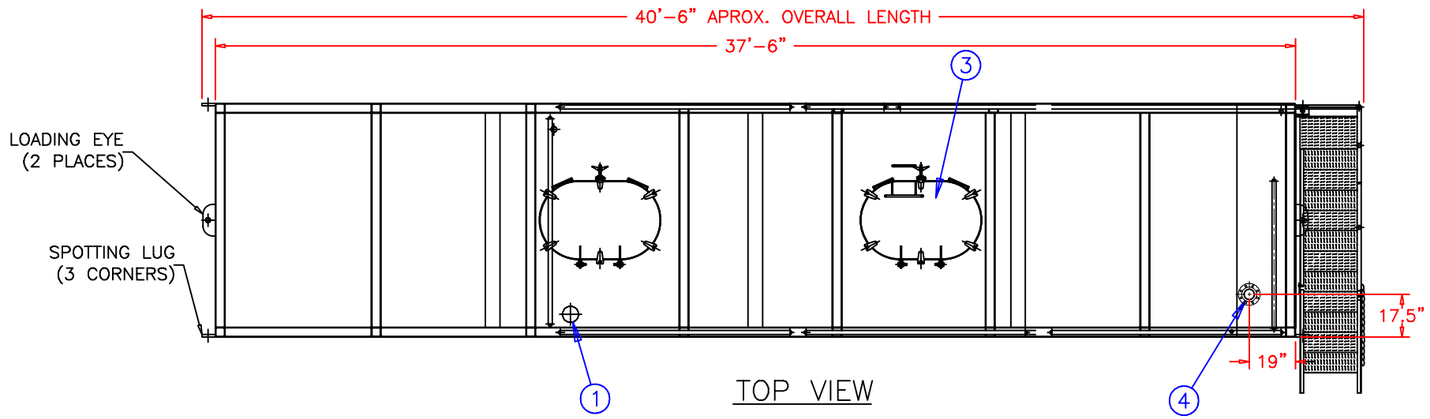

TOP VIEW

ITEM	QTY	DESCRIPTION
1	1	PRESSURE/VACUUM RELIEF VALVE
2	2	4" BUTTERFLY VALVE (SEE NOTE 1)
3	2	HINGED VAPOR PROOF HATCH
4	2	6" FLANGE WITH BLIND FLANGE (SEE NOTE 1)
5	1	LEVEL POINTER
6	1	OSHA COMPLIANT STAIRWAY & RAILS
7	1	OSHA COMPLIANT GUARD RAILS
8	1	20" END HATCH
9	1	4" x 4" STRUCTURAL TUBING FRAME, TYPICAL
10	1	INTERNAL LADDER

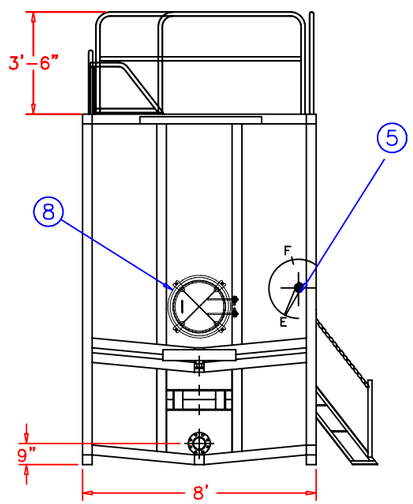

TRACTOR END

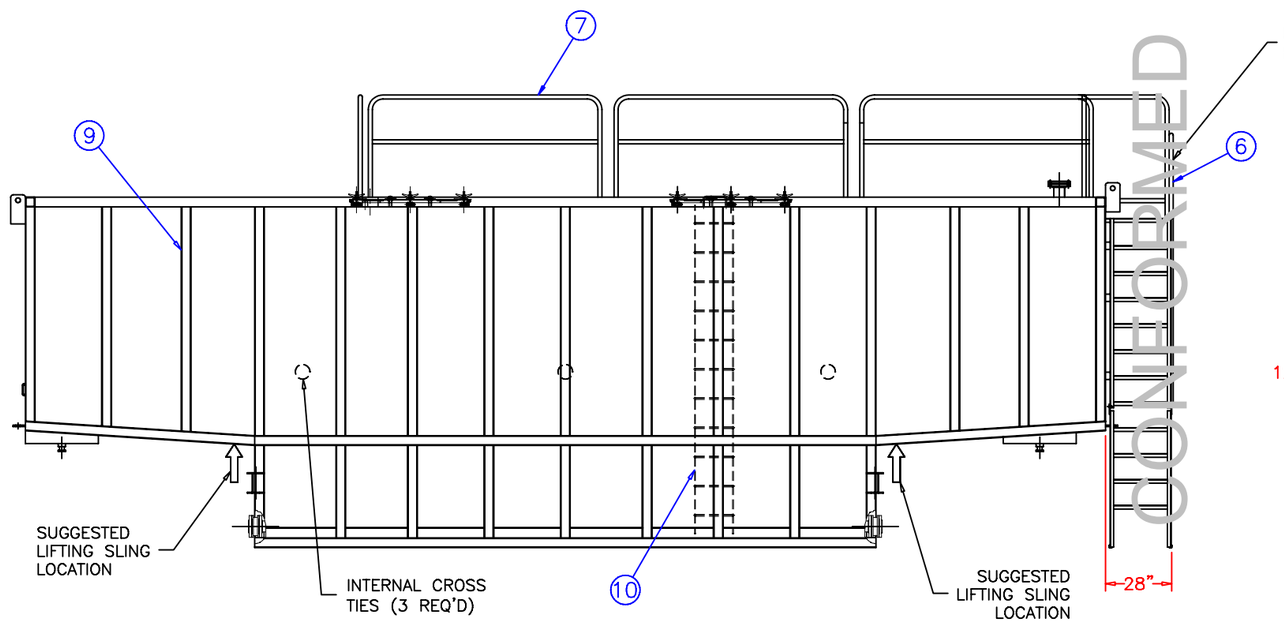

SIDE VIEW

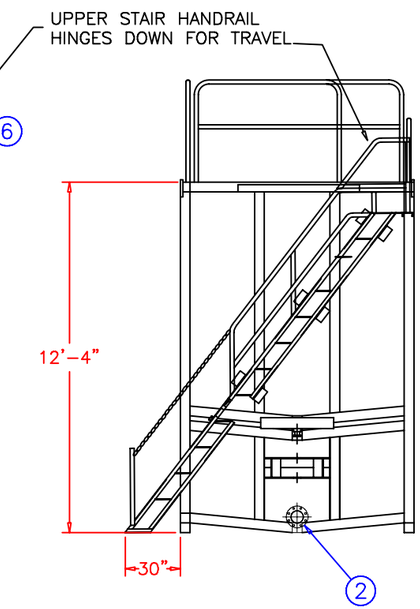

DOLLY END

SPECIFICATIONS:

1) Tank Capacity: 21,000 gallons (500 BBL)
2) Tank Weight: 26,000 lbs. (empty)

NOTES:

1. This drawing is a baseline representation for this model of tank. Variations between this drawing and the actual equipment in the field can and do exist, primarily with appurtenance locations, sizes and quantities. Consult your local BakerCorp representative if specific needs exist.
2. THIS TANK IS *NOT DESIGNED FOR TRANSPORTING LIQUIDS*. It should be moved only when empty.
3. Tanks of this type have an internal lining (coating) on the wetted surfaces.
4. This tank is equipped with a pressure/vacuum relief valve set at 1.0 1bs/sq. in. pressure and 0.4 oz/sq.in. vacuum.

The information contained herein is proprietary to BakerCorp and shall not be reproduced or disclosed in whole or in part, or used for any design or manufacture except when user obtains direct written authorization from BakerCorp.

REV.	DESCRIPTION	DATE	BY
G			
F			
E			
D			
C			
B			
A	ADDED HIDDEN LINES / LIGHTENED HANDRAILES	7/12/05	Z.E.R

BAKERCORP™
3020 OLD RANCH PARKWAY
SEAL BEACH, CA 90740-2751

SCALE:	SIZE B	ORIGINAL DWG. DATE 25FEB02
DRAWN BY: A. R.	APPROVED BY: –	CAT/CLASS ––
TITLE EZ CLEAN VAPOR–TIGHT		SHEET 1 OF 1
DRAWING NO. S-1-M0007-1-		REV. A

VCC 8x30 Virgin Coconut Shell Carbon

BakerCorp's VCC 8x30 mesh virgin carbon made from select grades of coconut shell. These activated carbon granules are a uniform adsorbent with well developed pore structure, allowing for a wide range of adsorbate retention. This carbon is ideal for purification of potable water, industrial wastewater treatment and groundwater treatment. This product is also suitable for refinement of organic liquids requiring purification and color reduction, such as amine and glycol solutions and will remove MTBE from groundwater.

PHYSICAL PROPERTIES:

Carbon Tetrachloride Activity:	60% minimum
Apparent Density (lbs./cu.ft.):	29 average
Total Ash Content:	3% maximum
Hardness (Ball Abrasion):	98% minimum
Iodine Number:	1,000 minimum
Moisture (as packed):	5% maximum
Mesh Size:	8x30

Standard Packaging: 1000 lb. super sacks. Other packaging available upon request.

These specifications represent general parameters and are subject to change. Please consult with BakerCorp before processing with your applications.

CONFORMED

4306 W. 190th Street, Torrance, California 90504
Phone: 310.303.3700 ♦ Fax: 310.406.3001

PRODUCT DATA SHEET

April, 2007

3" 304 S.S. BAG / CARTRIDGE FILTER SYSTEM

GENERAL INFORMATION

Two parallel-piped bag filters are followed by a single cartridge filter (can be converted to hold a single #2 bag instead) and are mounted on a forkliftable skid. Housings are not ASME code stamped. Different bag and cartridge elements are available depending on job requirements and should be specified by the customer prior to use.

WEIGHTS AND MEASURES

» Capacity*:	100 gpm (2 bag/ 1 cartridge) 200 gpm (3 bags, 5 microns and up) 300 gpm (parallel flow w/5 micron bags)
» Design Press:	150 psig
» Design Temp:	225°F max.
» Height:	5'-1" (overall)
» Width:	4'-0"
» Depth:	6'-2"
» Weight:	1175 lbs. (approx.)

*Capacity (flowrate) depends on factors such as liquid viscosity, micron value of the filter media, solids loading etc. Assuming a 10 micron rating, the clean pressure drop through the bag filter would be 2-3 psi and the drop through the cartridge about 2 psi additional. Lowering the micron rating of the cartridge below 10 will increase the drop into the 4-6 psid range. Cartridges are normally spent at 24-28 psid.

SKID DESIGN

» Skid:	2"x2" and 2"x4" c.s. structural tubing
» Vessel Mount:	Legs are attached to cross supports on skid
» Forklift Pockets:	Through front and rear framing channels (Each pocket is 21" wide)

FILTER DESIGN

» Assembly Number:	Krystil Klear L88(CL)303FA41523F4DF
» Vessel Covers:	Three eye nuts; hinged for easy access
» Piping:	3" Sch. 40 304 SS (SA-312-304)
» Inlet & Outlet:	3" Male Cam Lock
» Cartridge Elements:	6 required; Double Open End, 2-1/2" o.d. and 30 inches long; typically polyester or polypropylene string wound; 0.5 micron range and up.
» Bag Elements:	One size #2, 7-1/16" snap ring & 30" length required in each housing; Available fibers range from 1 to 1500 microns.
» Lid Seals:	Buna N
» Valves:	3" 150" butterfly with Buna packing
» Internal Hardware:	*Bag Filter*: 316 SS strainer basket with 9/64" perforations, 30" deep. 6.7" dia. *Cartridge Filter*: 316 SS center guide post, cup & spring assemblies

TESTS / CERTIFICATIONS

» Test Performed:	OEM Hydrotested @ 195 psi. Scheduled QMS inspections after purchase by BakerCorp.

CONFORMED

BAKERCORP™

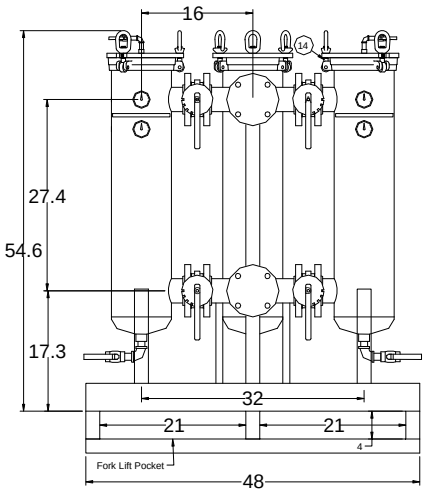

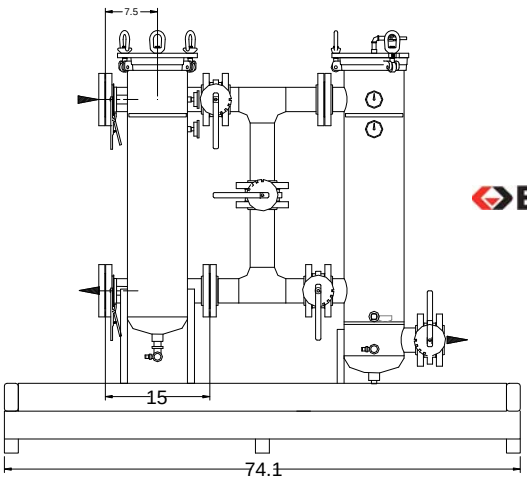

BAKERCORP™

To the best of our knowledge the technical data contained herein are true and accurate at the date of issuance and are subject to change without prior notice. No guarantee of accuracy is given or implied because variations can and do exist. NO WARRANTY OR GUARANTEE OF ANY KIND IS MADE BY BAKERCORP, EITHER EXPRESSED OR IMPLIED.

3020 Old Ranch Parkway • Suite 220 • Seal Beach, CA • 562-430-6262

PRODUCT DATA SHEET
January, 2007

FLIP TOP WEIR TANK
(VE ENTERPRISES VERSION)

GENERAL INFORMATION

This fixed-axle tank is fitted with two internal weirs and 14 top inspection doors.

WEIGHTS AND MEASURES

» Capacity:	20,000 gallons
» Height:	8'-6¼" (grade to tank roof) 12'-8½" (grade to top of handrails when up)
» Width :	8'-6"
» Length:	45'-7½" (tank only), 50'-0" (nose-to-bumper)
» Weight:	33,000 lbs.

STRUCTURAL DESIGN

» Floor:	¼" ASTM A36 carbon steel. "V" bottom sloping from each side to centerline of tank
» Sides/Ends:	¼" ASTM A36 carbon steel, corrugated shape
» Roof Deck:	¼" ASTM A36 carbon steel
» Wall Frame:	Corrugations only, no internal frame
» Internal Weirs:	Two internal steel weirs equally spaced to create three compartments inside tank. Overflow weir (forward weir) extends from floor up to one foot from top of tank. Underflow weir extends down from roof and terminates one foot from floor seam at sidewalls. Designed for 16 lbs. per gallon liquid on one side of weir and no liquid on the other side.

FEATURES

» Relief Valve:	None
» Valves:	(2) 4" wafer style butterfly valve, Bray series 30 or equivalent, with cast iron body, Buna-N seat and seals, 316 SS stem, Nylon 11 coated ductile iron disk

FEATURES – cont.

» Fill Line:	One 3-inch schedule 40 ASTM A106B pipe with cap and securing chain. Line enters front of tank near top with dip tube into first compartment down approx. halfway from bottom of tank where it 90° elbows into compartment.
» Front Drain:	One 4" wafer style butterfly valve. Mounted on 150# weld neck flange on tank side and 150# FPT flange on outside with plug and chain.
» Rear Drain:	One 4" wafer style butterfly valve. Mounted on 150# weld neck flange on tank side and 150# FPT flange on outside with plug and chain. Remote-operation handle.
» Rear Process Outlet:	One (1) 4" flanged and blinded nozzle 18" below roof deck
» Top Doors:	14- 51"x39"x10ga plate lids
» Manways:	Three (3) 22" diameter, passenger side
» Manway Seals:	Buna-N (NBR)
» Stairway:	OSHA compliant non-slip stairway with handrails and guardrails
» Walkway:	Full length of tank with guardrails on both sides; door handles accessible

SURFACE DETAILS

» Exterior Coating:	High gloss polyurethane
» Interior Coating:	Chemical resistant lining

TESTS/CERTIFICATIONS

» Test Performed:	100% water-tested to full capacity by OEM, plus level 1, 2 &3 QMS inspections by Baker Tanks

CONFORMED

BAKERCORP™

To the best of our knowledge the technical data contained herein are true and accurate at the date of issuance and are subject to change without prior notice. No guarantee of accuracy is given or implied because variations can and do exist. NO WARRANTY OR GUARANTEE OF ANY KIND IS MADE BY BAKERCORP, EITHER EXPRESSED OR IMPLIED.

3020 Old Ranch Parkway • Suite 220 • Seal Beach, CA • 562-430-6262

ITEM	QTY	DESCRIPTION
1	3	22" diameter manway
2	2	4" drain conn. w/butterfly valve
3	1	Stairway assembly
4	1	Walkway with handrail
5	14	Flip top door plates
6	14	Door plate handles
7	1	3" fill line
8	1	4" nozzle
9	5	Brace assembly
10	2	Weir plate

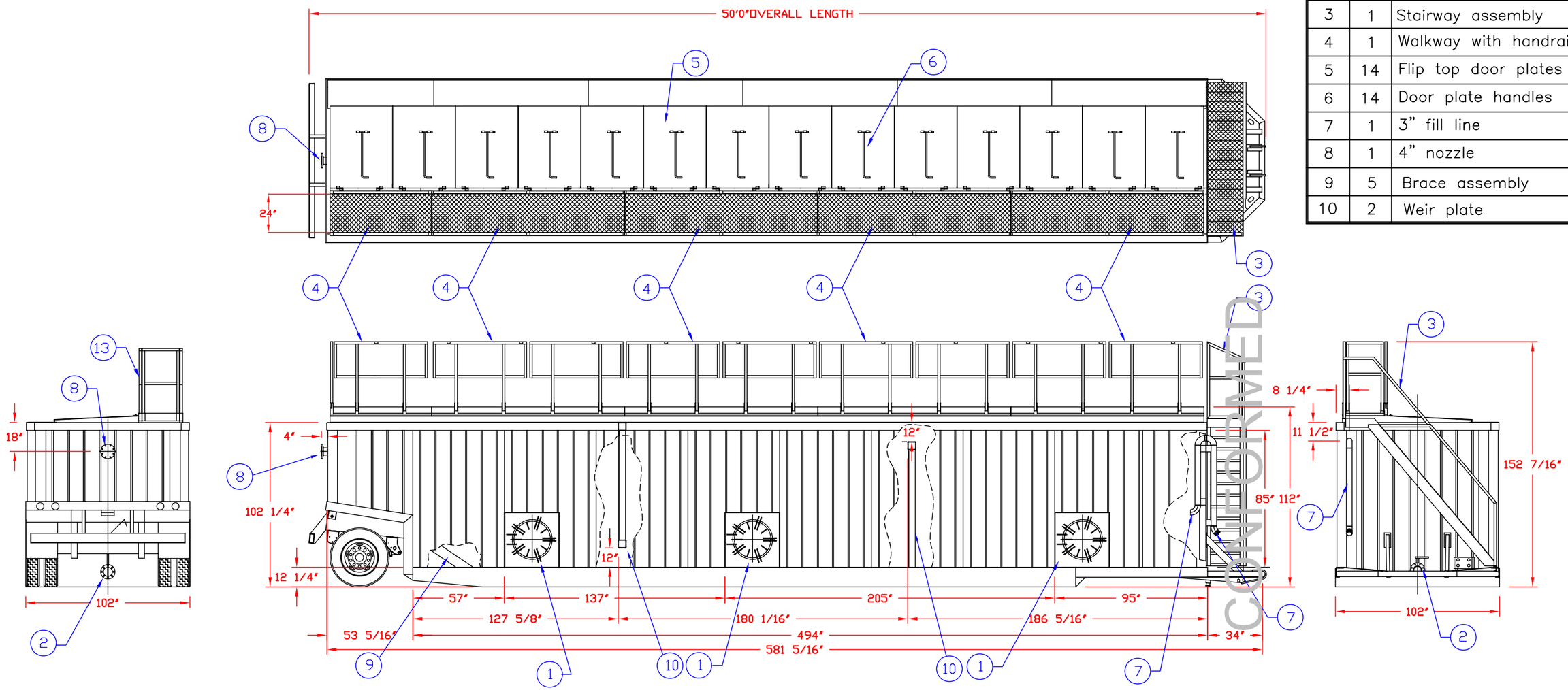

SPECIFICATIONS:

1) Tank Capacity: 20,000 gallons (476 BBL)
2) Tank Weight: 33,000 lbs. (empty)

NOTES:

1. This drawing is a baseline representation for this model of tank. Variations between this drawing and the actual equipment in the field can and do exist, primarily with appurtenance locations, sizes and quantities. Consult your local BakerCorp representative if specific needs exist.
2. THIS TANK IS *NOT DESIGNED FOR TRANSPORTING LIQUIDS*. It should be moved only when empty.
3. Tanks of this type have an internal lining (coating) on the wetted surfaces.
4. This tank is constructed from A36 carbon steel.

The information contained herein is proprietary to BakerCorp and shall not be reproduced or disclosed in whole or in part, or used for any design or manufacture except when user obtains direct written authorization from BakerCorp.

REV.	DESCRIPTION	DATE	BY
G			
F			
E			
D			
C			
B			
A	FIXED CUTAWAYS / LINEWEIGHT	7/12/05	Z.E.R

BAKERCORP™
3020 OLD RANCH PARKWAY
SEAL BEACH, CA 90740-2751

SCALE: DO NOT SCALE	SIZE B	ORIGINAL DWG. DATE 16JUL02
DRAWN BY: P.J.B.	APPROVED BY:	CAT/CLASS --
TITLE VE ENTERPRISES FLIP TOP WEIR TANK		SHEET 1 of 1
DRAWING NO. S-2-M0005-1-		REV. A

Attachment D
Typical Specifications for 700 Gallon Per Minute Temporary Groundwater Treatment Plant

NOTE: All equipment brands depicted herein shall be
considered as "typical" and are provided for reference purposes,
with "or equivalent" applicable to all equipment.

CONFORMED

PRODUCT DATA SHEET

March, 2007

D-KLEEN.WATER 10K

GENERAL INFORMATION

This system is designed for continuous aqueous phase treatment of groundwater or wastewater, and has the ability to remove contaminants to non-detectable levels. The influent stream may be drawn in through the system in either series or parallel flow, and can operate on one vessel only while the other is in backwash mode. BakerCorp can provide a number of service and disposal options for the spent media,

WEIGHTS AND MEASURES

» Max. Flowrate:	Up to 600 gpm in series or 1200 gpm in parallel (application dependent)
» Max. Pressure:	100 psi
» Max. Temp:	150°F
» Height:	10′-6″ (overall)
» Width:	8′-0″ (skid)
» Length:	25′-0″ (skid)
» Diameter:	96″ (each vessel)
» Shipping Wt.: (empty)	40,000 lbs.(equipment – 20,000 lbs; activated carbon – 20,000 lbs)
» Operating Wt.:	80,000 lbs. (including 40,000 lbs. water)

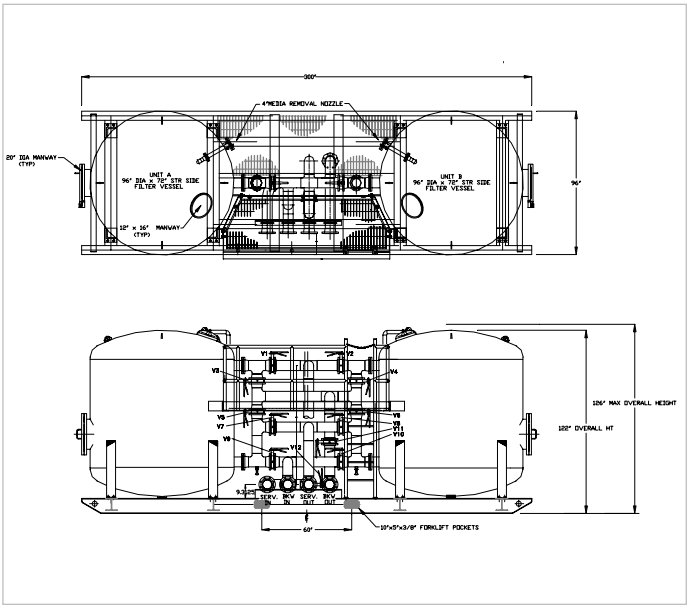

FILTER MEDIA

» Types:	▪Activated Carbon ▪Organoclay ▪Ion Exchange Resin ▪Specialty Media
» Volume:	320 cu. ft per vessel (640 cu. ft. total)
» Weight:	~10,000 lbs. each vessel (20,000 lbs. total)

MISCELLANEOUS DATA

» Vessel Code:	ASME Code stamped for 100 psi @ 150°F.
» Service In/Out:	6″ Flanged connection w/ sch. 40 piping
» Backwash In/Out:	6″ Flanged connection w/ sch. 40 piping
» Manifold Valves:	6″ Lever-operated cast iron butterfly
» Media Removal:	4″ top-mounted nozzle with draw connection at grade
» Internals:	Lower Underdrain: 6″ header/2″x1″ drop strainer type constructed of 316 SS Upper Distributor: 6″ header/3″ open end riser type constructed of 316 SS
» Platform:	Galvanized grating with perimeter guardrails
» Vessel Interior Access:	Top manway – 12″x16″ elliptical Side manway – 20″ round
» Manway Gaskets:	Neoprene
» Interior Coating:	Polyamine epoxy coating

PRESSURE DROP DATA & OPTIONS AVAILABLE

Contact BakerCorp

NOTE:

1. Wet activated carbon preferentially removes oxygen from air. In closed or partially closed containers and vessels, oxygen depletion may reach hazardous levels. If workers are to enter a vessel containing carbon, appropriate procedures for potentially low oxygen spaces must be followed, including all federal and state requirements.

CONFORMED

BAKERCORP™

To the best of our knowledge the technical data contained herein are true and accurate at the date of issuance and are subject to change without prior notice. No guarantee of accuracy is given or implied because variations can and do exist. NO WARRANTY OR GUARANTEE OF ANY KIND IS MADE BY BAKERCORP, EITHER EXPRESSED OR IMPLIED.

3020 Old Ranch Parkway • Suite 220 • Seal Beach, CA • 562-430-6262

PRODUCT DATA SHEET

January, 2007

YARDNEY 4-POD SAND FILTER

(Equip. # SFL21988 and earlier)

GENERAL INFORMATION

Skid mounted high rate automatic backwashing sand media filter (4 tanks (pods)) designed for general-purpose water filtration of organic and inorganic solids (Yardney Model # IL5424-4AS2). Powered by 110 V external power supply, or battery with solar cell recharge for remote operation.

WEIGHTS AND MEASURES

» Capacity:	504 – 756 gpm (Normal flow range) 1000 gpm (Peak flow)
» Design Press:	80 psi maximum
» Temperature:	Limit to ambient. Consult BakerCorp if temperature exceeds 100 degrees.
» Filtration:	To 50 microns
» Height:	8'-11" (overall)
» Width :	6'-3"
» Length:	20'-1"
» Weight:	6,326 lbs. – equipment only 14,500 lbs. – media only 28,000 lbs. - operational
» Backflush:	240 gpm, automatic

OPERATING REQUIREMENTS

» Compressed Air:	5 cfm minimum at 60 psi **[Note: external air supply required]**
» Sand Media:	Crushed silica, 0.47MM (#80 grit)
» Gravel Media:	#3 crushed rock, ½" x ¾"
» Input Power:	Selectable input power of customer supplied 110 V AC, or 12V DC from a unit mounted solar package.
» Output Power:	12V DC

FEATURES

» System Controller:	Automatic Filter Controller. Flush activation based on elapsed time and/or pressure differential.
» Piping:	Inlet & outlet pipe is 6" A53B, 3/16" wall; weld fittings are A234; flanges are A106. Backflush piping is 4" schedule 40 PVC.
» Solar Panel:	Uni-Solar Model UA-5 (5 watts) module.

FEATURES – con't

» Press. Gauge:	2" face, ¼" NPT bottom connection, stainless steel case, plexiglass lens, brass bourdon tube, 0-100 psi range.
» Flowmeter:	Six-inch propeller type meter, AWWA C704-92 compliant. Instantaneous flowrate indicator and six-digit totalizer. Accuracy is ±2% of reading. Repeatability of 0.25%. Rated at 90-1200 gpm, 150 psi, 160°F. Tube: epoxy-coated carbon steel; Impeller: high-impact plastic.
» Butterfly Valves:	Effluent / Influent: 6" with cast iron body (epoxy coated), EPDM seat, 304 SS stem and aluminum bronze disc. Tank Isolation: 4" grooved ends, EPDM disc coating
» Ball Valves:	Four-inch, bronze body and brass ball; seat is carbon/glass-filled PTFE. ¼ turn open or close.
» Solenoid Valve:	12V DC, normally closed type 7121V (energizing opens valve).
» Differential Press. Switch:	0-30 psid. Two-inch dial, plated steel case, ±3% accuracy.
» Air / Vacuum Release Valve:	2" Bernard Model 4415 valve, mounted on backwash, influent and effluent lines
» Battery:	Sealed rechargeable lead-acid, 12V, NP2.6-12
» Battery Charger:	Power-Sonic Model PSC-12500A, 12 volts.
» Tubing:	Pressurized – ¼" 304 ss w/ Hoke fittings; Drain - ¼" polypropylene; Vent – schedule 80 PVC

SURFACE DETAILS

» Interior Coating:	3M Skotchkote 134
» Exterior Coating:	High Gloss Polyurethane

TESTS/CERTIFICATIONS

» Tests Performed:	OEM pressure tested. BakerCorp performs scheduled QMS inspections.

CONFORMED

BAKERCORP™

To the best of our knowledge the technical data contained herein are true and accurate at the date of issuance and are subject to change without prior notice. No guarantee of accuracy is given or implied because variations can and do exist. NO WARRANTY OR GUARANTEE OF ANY KIND IS MADE BY BAKERCORP, EITHER EXPRESSED OR IMPLIED.

3020 Old Ranch Parkway • Suite 220 • Seal Beach, CA • 562-430-6262

PRODUCT DATA SHEET

March, 2008

8" 304 STAINLESS STEEL 12-BAG FILTER SYSTEM

GENERAL INFORMATION

Single vessel mounted on a forkliftable skid. Housing is not ASME code stamped. Different filter elements are available depending on job requirements and should be specified by the customer prior to use.

WEIGHTS AND MEASURES

» Capacity*:	1200 – 2000 gpm (@ 1 micron and up)
» Design Press:	150 psig
» Design Temp:	225°F max. (gasket dependent)
» Height:	7'-5" (overall)
» Width:	4'-11"
» Depth:	7'-5"
» Weight (dry):	1075 lbs. (approx.)

*Capacity (flowrate) depends on factors such as liquid viscosity, micron value of the filter media, solids loading etc. Assuming water as a filtrate and factoring in pressure drop only, 2000 gpm is a practical upper limit for a size #2 bag with a 100 micron rating; 1200 gpm with 1-micron rated bags.. Clean pressure drop would be 2-3 psi. Lowering the micron rating increases the pressure drop. The minimum pressure drop for this unit at higher micron ratings is 1-2 psi. Filter bags should be changed out at 15-18 psid, or earlier if the process requires it.

SKID DESIGN

» Skid:	2"x2"x0.25" A36 c.s. structural tubing
» Vessel Leg Supports:	3x3x.375 angle, SA-36
» Forklift Pockets:	Through front and rear framing channels

FILTER DESIGN

» Assembly Number:	Krystil Klear LR12-36-30-8F-A-4-15-SP
» Top Head:	(17) closure bolts and nuts with davit lift assembly. 36" O.D., 0.25" thk, SA-240 Gr. 304 stainless steel
» Shell:	36" O.D., 0.25" thick x 28" L . R & T, SA-240 Gr. 304 stainless steel
» Inlet & Outlet:	8" 150# RFSO flanges, SA-182 Gr. 304 S.S.
» Bag Elements:	12 required: size #2, 7-1/16" snap ring & 30" length required; Available fibers range from 1 to 1500 microns.
» Lid Seal:	Buna N O-ring
» In/Out Valves:	8" 150" butterfly with Buna seat
» Internal Hardware:	SA-240 Gr. 304 S.S. tube sheet

TESTS / CERTIFICATIONS

» Test Performed:	OEM Hydrotested @ 195 psi. Scheduled QMS inspections after purchase by BakerCorp.

CONFORMED

BAKERCORP™

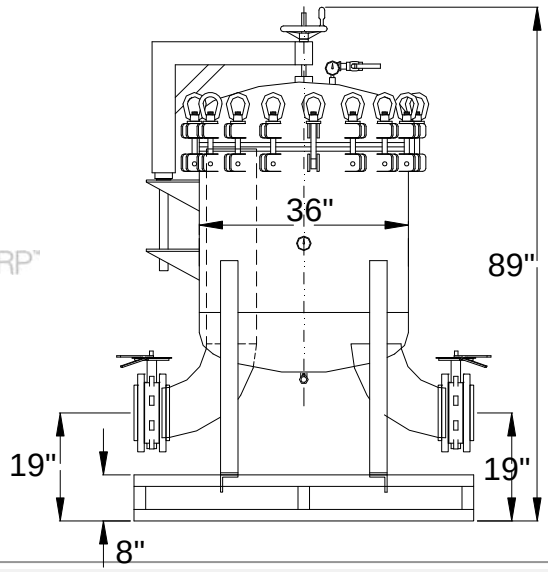

BAKERCORP™

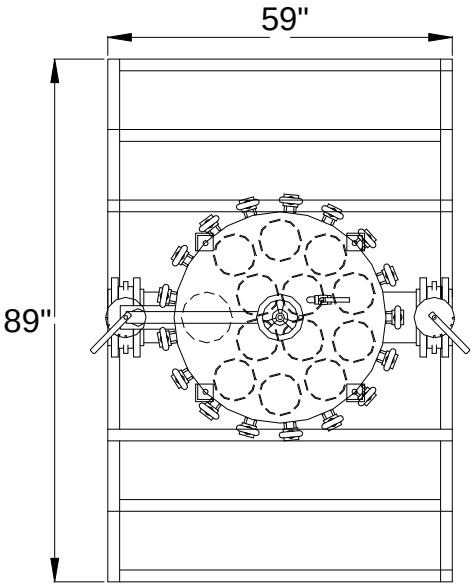

To the best of our knowledge the technical data contained herein are true and accurate at the date of issuance and are subject to change without prior notice. No guarantee of accuracy is given or implied because variations can and do exist. NO WARRANTY OR GUARANTEE OF ANY KIND IS MADE BY BAKERCORP, EITHER EXPRESSED OR IMPLIED.

3020 Old Ranch Parkway • Suite 220 • Seal Beach, CA • 562-430-6262

PRODUCT DATA SHEET

1/4/2012

BP44LS-GD66AT

BakerPrime 4x4 Low Pressure Solids Handling Unit (Attenuated, Trailer)

GENERAL INFORMATION

The compressor/venturi priming system uses a compressor to blow compressed air through a jet into a tapered tube to create a vacuum on the suction.

PERFORMANCE DATA

» Flow (min/max):	-	60 gpm / 925 gpm
» Minimum Shutoff Head:	-	87 feet (38 psi) @ 1550 rpm (1)
» Maximum Shutoff Head:	-	152 feet (66 psi) @ 2100 rpm (1)
» Minimum Speed:	-	1550 rpm
» Maximum Speed:	-	2100 rpm
» Maximum Suction Lift:	-	25 feet (2)
» Maximum Casing Press:	-	99 psi
» Maximum Temperature:	-	160°F (7)
» Maximum Solids Size:	-	3" spherical diameter

PUMP SPECIFICATIONS

» Impeller:	-	9.75"
» Bearing Lubrication:	-	SAE No. 30 Oil
» Vacuum System:	-	8.5 cfm Compressor/Venturi
» Mechanical Seal Lube:	-	SAE No. 30 Oil (3)

PHYSICAL SPECIFICATIONS

» Suction Size:	-	4" flange
» Discharge Size:	-	4" flange
» Approximate Weight:	-	5223 lbs dry / 5720 lbs wet
» Overall Height:	-	89" (to top of lifting eye)
» Overall Width:	-	63" (outer most edges)
» Overall Length:	-	137" (nose to tail)

Enclosure

> Enclosure is made from Galvaneal. Hinged doors on each side provide easy interior access for servicing. Soundproof insulation provides the quietest operation in the industry, and the entire unit, including controls, can be locked for added security.

» Sound Rating:	-	67 dBA at 23 feet

BakerCorp Reference # 404-0105

MATERIAL SPECIFICATIONS

» Pump Casing:	-	Gray Iron No. 30
» Shaft Sleeve:	-	17-4 PH S.S.
» Wear Rings:	-	Carbon Steel No. 1018
» Mechanical Seal Faces:	-	Silicon-Carbide/Silicon-Carbide
» Pump Shaft:	-	Alloy Steel No. 4140
» O-rings:	-	Buna-N
» Impeller:	-	Ductile Iron No. 4140
» Check Valve Body:	-	Gray Iron No. 30
» Check Valve Flapper:	-	Buna-N

ENGINE SPECIFICATIONS

» Engine Make/Model:	-	Deere 4024H
» Total Displacement:		2.4 Liter
» Aspiration:	-	Turbocharged
» Max. Continuous BHP:	-	66 @ 2400 rpm (4)
» Crankcase Oil:	-	SAE 10W40 (5)
» Coolant:	-	50/50 Water/Antifreeze
» Safety Shutdowns:	-	High Water Temp & Low Oil Pressure
» Fuel Consumption:	-	2.78 gal/hr @ 1800 rpm (6)
» Run Time:	-	25 hours at 1800 rpm at 80% Engine Load
» Fuel Capacity/Type:	-	70 gal of No. 2 diesel
» Number of Cylinders:	-	Four

Notes:

(1) Based on 1.0 specific gravity

(2) Depends on flow rate, pump speed, and elevation. See performance curve.

(3) Should always be visable and clear in appearance thru sight glass.

(4) WARNING – this is the rated speed for the ENGINE ONLY. The rated speed of the pump is less. See curve for max pump RPM.

(5) Must be changed every 250 hours of runtime.

(6) Run time fluctuates with speed and engine loads.

(7) Equipment material limitation. Lower max temperature may be necessary due to application conditions and pump NPSH requirements.

CONFORMED

To the best of our knowledge the technical data contained herein are true and accurate at the date of issuance and are subject to change without prior notice. No guarantee of accuracy is given or implied because variations can and do exist.

NO WARRANTY OR GUARANTEE OF ANY KIND IS MADE BY BAKERCORP, EITHER EXPRESSED OR IMPLIED.

PRODUCT DATA SHEET

1/4/2012

BP44LS-GD66AT

BakerPrime 4x4 Low Pressure Solids Handling Unit (Attenuated, Trailer)

PHYSICAL SPECIFICATIONS

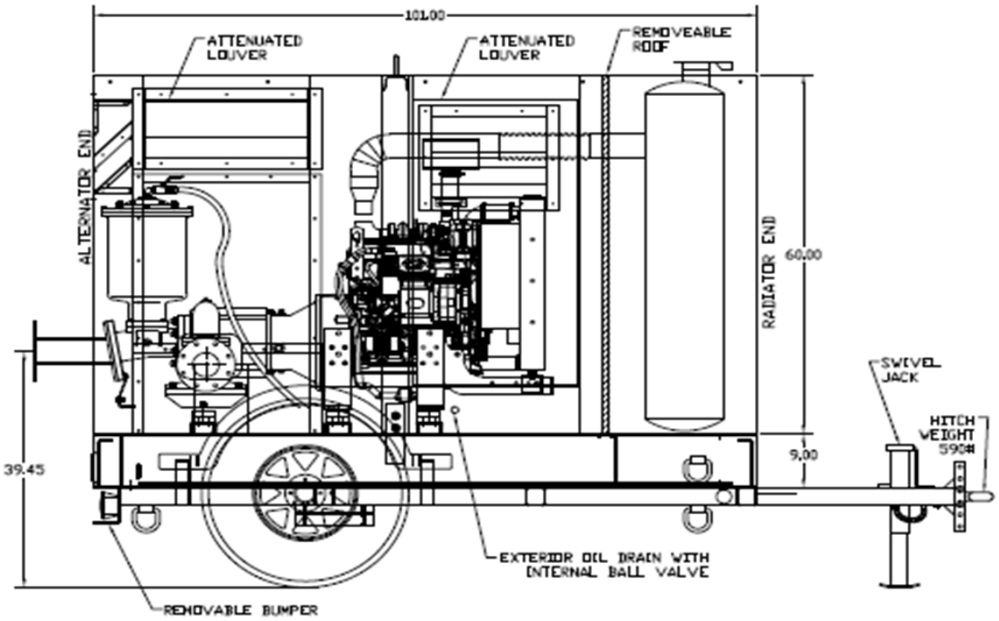

PERFORMANCE CURVE

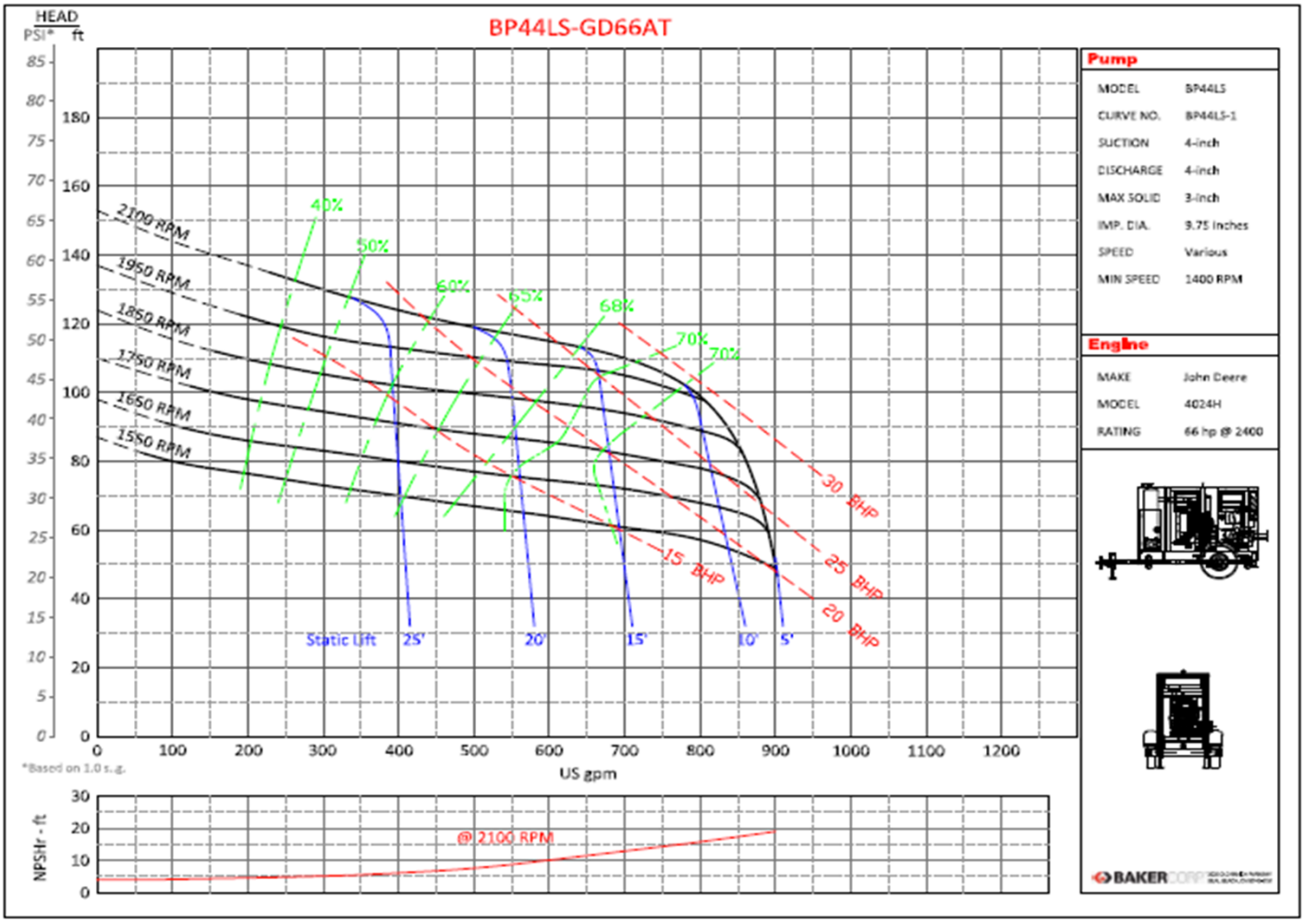

CONFORMED

PUMPS

CONFORMED

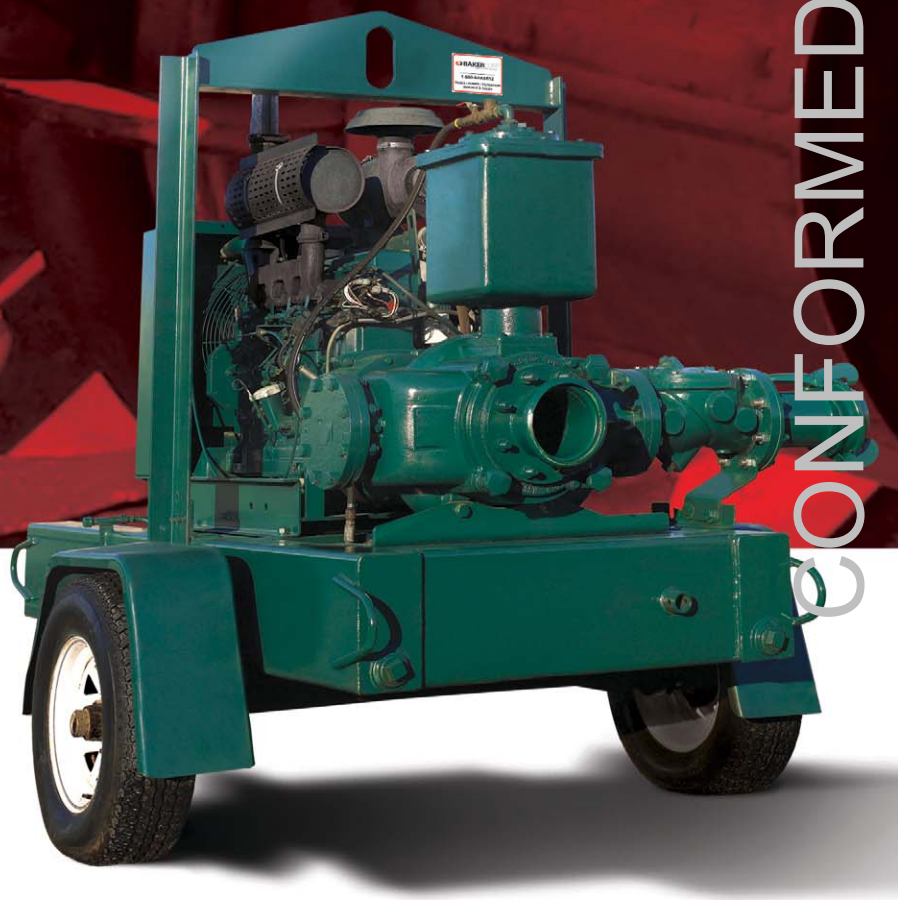

BAKERCORP™

PEOPLE. EQUIPMENT. SOLUTIONS.

TOUGH JOBS. PROVEN RESULTS.

PUMPS FROM BAKER. MAXIMUM PERFORMANCE. ZERO HASSLE.

Since 1942, BakerCorp has thrived in a very demanding business. We began by renting temporary steel storage tanks to the oilfield industry. Today, we are the largest, most experienced containment, pump and filtration company in the world with over 90 locations nationwide and international operations in Europe, Canada and Mexico. We serve a breadth of market segments including chemical, manufacturing, refining, oil and gas, construction, municipal, industrial services and environmental remediation.

BakerCorp has achieved this success by adhering to the highest standard of excellence throughout every area of our business. We stock the largest inventory of quality equipment and keep it running with the most comprehensive maintenance program in the industry. Our teams are comprised of highly-trained professionals with years of experience and vast product knowledge. Their dedication to providing customers with unparalleled, 24/7/365 personal service is constant and unwavering. From the earliest stages of your project's planning through its completion, BakerCorp will work closely with you to design the best solution based upon the specific needs of your application.

Partnering with BakerCorp on your projects means that you will work alongside professionals dedicated to providing quality solutions—integrated solutions that pull from a deep pool of talent, equipment and experience. It means that your challenges will be resolved using the most logical and comprehensive mix of tanks, pumps and filtration systems available anywhere. BakerCorp's depth of experience and reputation for innovative system design ensures your project will be brought to a successful conclusion—the first time and every time.

CONFIDENCE FOR

We know pumps. We know systems. And we know how to get the job done. Whatever the challenge—wastewater removal, flood control, sewer bypass or hydroblast pad water recirculation—you'll find BakerCorp on the job.

Nobody is better equipped than BakerCorp. We inventory an extensive fleet of the highest quality prime assist, self-prime, diesel-driven, electric drive, centrifugal and submersible pumps along with a broad range of pipe, hose and fittings. Our pumps perform at the maximum level because each pump undergoes a rigorous maintenance program completed by certified mechanics to insure the highest level of dependability before it is delivered to the jobsite.

BakerCorp offers an unbeatable combination of equipment selection and application expertise that you can rely on when you're up against a tough pumping project. Our field personnel are cross-trained to be technical experts who specialize in pumps, and nothing but. Closer to application engineers than sales people, they'll point you to solutions that will be cost-effective, labor-friendly and dependable. From system design and set-up to removal after a completed job, you can count on pumping solutions from BakerCorp.

PROVIDING PROVEN SOLUTIONS TO INDUSTRY FOR OVER 65 YEARS.

MUNICIPAL

- Sewer bypass and pipeline projects
- Lift station repair
- Temporary pumps used during sanitary sewer overflow
- Sludge pumping for wastewater lagoon clean-up

CONSTRUCTION

- Dewatering
- Temporary firewater systems
- Dust control
- River, lake and stream dredging projects

MANUFACTURING

- Liquid transfer for treatment plant projects
- Temporary pumping for stormwater runoff control
- Additional liquid transfer capacity during maintenance or repairs

REFINERIES

- Pumping for cooling tower liquids and sludges
- Hydroblast pad water recirculation
- Hydrotesting
- Portable pumps for wastewater treatment plant overloads

RENTALS, SALES AND 24/7/365 NATIONWIDE SERVICE... BAKER DELIVERS.

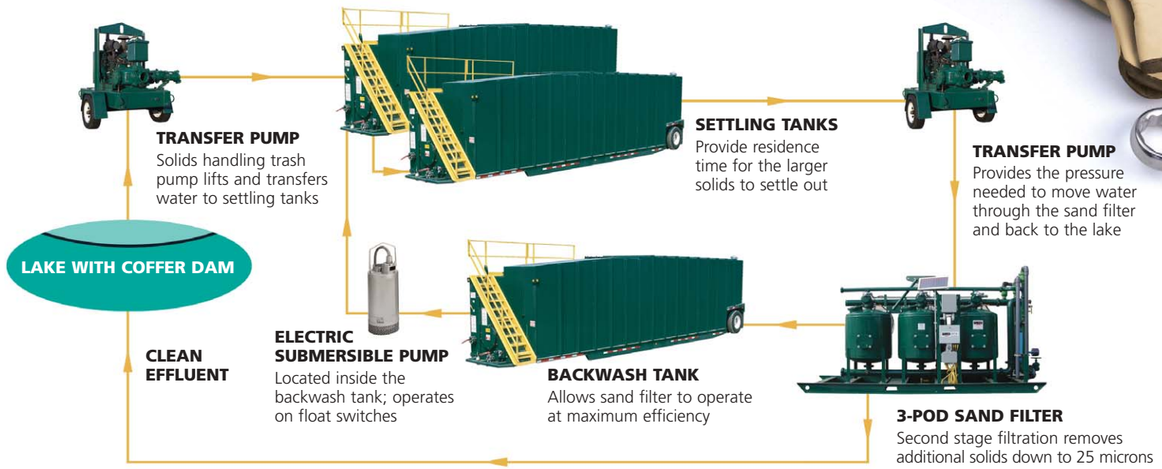

ANATOMY OF AN INTEGRATED BAKERCORP DEWATERING SYSTEM
The above diagram shows a typical dewatering system for lakeside construction. Using this system, a large volume of dirty, silty water can be pumped from inside a coffer dam and through the filtration process efficiently. The construction can then be completed inside the coffer dam while the clean effluent water is safely returned to the lake.

Our emergency response service is available 24/7/365 by field technicians that work exclusively on pumps. Their expertise in the field is unmatched and supplemented with ongoing specialized technical and mechanical training.

SETTING THE STANDARD—THE BEST MAINTAINED PUMPS IN THE INDUSTRY.

You can count on BakerCorp's vast network and inventory for immediate delivery of the highest quality pumps and systems. Our rigorous QMS maintenance program—patterned after ISO 9000 certification guidelines—helps insure consistent delivery of peak performance and dependability. Designed and tested to meet NESHAP and OSHA standards, every pump must pass up to three levels of inspection by a BakerCorp certified mechanic before release into the field.

Performance tests are conducted on the engine and pump including starting, idling and shut down operations. All seals, gaskets, valves, discharge manifolds, guards, plugs, filters, pipes, hoses and fittings are carefully checked for any breach of integrity. Fluid levels are topped off and equipment is given a final check for cleanliness and instructions for operation.

A Reputation for Excellence
Our technical sales staff's ability to accurately evaluate the needs of your project, design an effective solution and manage its timely delivery and installation is second to none.

Other team members regularly participate in Pump Application Training (P.A.T.) to keep informed of current technologies and trends.

In addition, stringent safety programs focusing on both site and product specific training help ensure that our people bring an unparalleled level of expertise to each and every job.

SEWER BYPASS

REFINERY TURNAROUND

RESIDENTIAL DEWATERING

In addition to the industry's most comprehensive pump solutions, BakerCorp's tank and filtration divisions deliver the same levels of expertise, service and quality synonymous with our pump solutions.

TANKS. NO BIGGER INVENTORY. NO BETTER SERVICE.

Nobody knows temporary containment like BakerCorp. With an unmatched inventory of tanks and accessories, we rent 17 varieties of steel tanks alone, along with poly tanks, roll off boxes, and specialty equipment.

Our unrivaled history and experience, combined with our world-class applications expertise and 24/7/365 emergency-ready support, BakerCorp gets the call on the toughest containment challenges. Our engineers analyze every aspect of your project resulting in a highly efficient solution. Then we deliver it directly to your jobsite, set it up and remove it once the project is complete.

Whatever the job—construction runoff, cooling tower cleaning, wastewater storage/treatment or environmental remediation—BakerCorp delivers.

FILTRATION. LIQUID OR VAPOR. CLEARLY SUPERIOR SOLUTIONS.

From engineered solutions to on-site services and waste management, BakerCorp provides filtration expertise in the fields of specialty media, applied science, and hazardous materials. Our scientists and engineers—with extensive knowledge of contaminants, environmental laws and regulations, hazardous material management and health and safety—enable us to customize solutions to meet exact requirements. And once in place, our on-site service technicians and waste management teams provide comprehensive support.

Whatever your needs, BakerCorp is on call, nationwide, wherever and whenever.

PUMPS

	Priming Assisted	Self Priming	High Pressure	Electric
Ideal Usage	Construction site dewatering, sewer bypass, tank cleaning, flood management, municipal projects.	Refineries, chemical facilities, waste water treatment plants, construction site dewatering.	Industrial water blasting, Pipeline pigging, irrigation, standby fire protection, environmental cleanups.	Construction and industrial applications of all types where diesel engines are not allowed or are impractical.
Benefit	Can operate in flooded conditions and pull a suction lift. Fully automatic priming. Dry-run capability.	Low maintenance. Easy access with large cleanout port. Emergency shutdown features.	Produces enough pressure to eliminate multiple pumps. Operates in flooded conditions. Unattended operation.	Clean and quiet operation. Refueling is not required.
PERFORMANCE				
Suction Size	4" – 12"	3" – 6"	4" – 10"	3" – 10"
Discharge Size	3" – 12"	3" – 6"	3" – 8"	3" – 8"
Max Flow Range	300 gpm – 6,000 gpm	450 gpm – 1,700 gpm	800 gpm – 5,200 gpm	Up to 5,200 gpm
Suction Lift	Up to 28'	Up to 28'	Up to 28'	Up to 28'
Max Shut Off Head Range	90' – 490'	112' – 171'	285' – 490'	Up to 480'
Max Solids Size	Up to 3.35"	Up to 3"	1/2" – 3.35"	Up to 3.35"
Max Operating Temp	150° F – 190° F	Up to 160° F	150° F – 175° F	Up to 160°F
Fuel	No. 2 Diesel	No. 2 Diesel	No. 2 Diesel	Electric; 115/230/460 volts
Run Time per Full Tank	Typically 24 hrs. Call for details.	Typically 24 hrs. Call for details.	8 – 24 hours	N/A
Fuel Capacity	30 gallons – 171 gallons	50 gallons – 88 gallons	60 gallons – 235 gallons	N/A
Operating Speed	1,000 rpm – 2,400 rpm	1,000 rpm – 2,200 rpm	1,000 rpm – 2,400 rpm	Typically 1,800 rpm
GENERAL INFORMATION				
Weight	2,050 lbs – 7,900 lbs	2,000 lbs – 3,900 lbs	3,300 lbs – 7,900 lbs	Less than diesel counterparts
Standard Mount	Trailer or skid	Trailer or skid	Trailer or skid	Skid
Prime Mover	Diesel engine and electric motor	Diesel engine and electric motor	Diesel engine and electric motor	Typically open drip proof motors
Casing Material	Ductile iron, cast iron and 316 stainless steel	Cast iron	Cast iron and stainless steel	Ductile iron or cast iron
Seal Type	Silicon carbide/silicon carbide or silicon carbide/tungsten carbide	Tungsten/tungsten or silicon/silicon	Silicon carbide and tungsten carbide	Silicon carbide and tungsten carbide
Safety Features	Coupling guards; high water temperature and low oil pressure shutdowns on diesel engines.	Coupling guards; high water temperature and low oil pressure shutdowns on diesel engines.	Coupling guards; high water temperature and low oil pressure shutdowns on diesel engines.	Coupling guards. Circuit breakers and overload protection in NEMA 3R enclosures.

	Electric Submersible	Hydraulic Submersible	Air Diaphragm	Sound Attenuated	Utility
Ideal Usage	Removing water and handling solids up to 3.15" when electric power source is available.	High suction lift applications such as sewer bypass jobs. Dewatering of mines, quarries and gravel pits.	Sludge and slurries, flood control and dewatering situations associated with refineries. Applications where compressed air is available.	Sewer bypass projects in residential areas. "Quiet Zones" such as hospitals or retail commercial areas.	Construction site dewatering, product transfer, emergency standby, sewage transfer, irrigation and farm use.
Benefit	Around–the–clock unattended operation. User-friendly. Quiet operation. Lower labor costs.	No suction line limitations. Unattended operation. Submerged pump head. Variable speed. No electrical requirements.	Light and portable. Adjustable flow rates. Non-stall air valves. Easy to use. Flexible. Reduces down time.	Sound enclosures significantly reduce noise. Tested to meet CPB standards.	Light and portable. Easy access to pump. Economical, maintenance-free, self-lube mechanical seal.
PERFORMANCE					
Suction Size	—	—	1"– 3"	4" – 8"	2" – 3", NPT
Discharge Size	3" – 10"	4" – 6"	1"– 3"	4" – 8"	2" – 3", NPT
Max Flow Range	100 gpm – 5,000 gpm	Up to 1,750 gpm	40 gpm – 250 gpm	150 gpm – 2600 gpm	225 gpm – 425 gpm
Suction Lift	N/A	N/A	Up to 24'	Up to 28'	Up to 20'
Max Shut Off Head Range	Up to 375'	65' – 130'	Up to 230'	Up to 195'	Up to 98'
Max Solids Size	3/8" – 4"	Up to 4"	1/4" – 2"	3"	Up to 1 1/2"
Max Operating Temp	100° F – 120° F	150° F – 190° F	212° F	160° F	150° F
Fuel	Electric; 115/230/460 volts	No. 2 Diesel (for the hydraulic power unit)	Compressed air	No. 2 Diesel	Gasoline
Run Time per Full Tank	N/A	24 hours	N/A	24 hours	Two hours
Fuel Capacity	N/A	50 gallons – 112 gallons	N/A	61 gallons – 84 gallons	1 gallon – 1.5 gallons
Operating Speed	Typically 1,800 rpm or 3,600 rpm	1200 rpm – 2200 rpm (engine speed)	N/A	1,000 rpm – 2,200 rpm	2,000 rpm – 3,600 rpm
GENERAL INFORMATION					
Weight	30 lbs – 1,500 lbs	135 lbs – 420 lbs (pump head)	79 lbs – 379 lbs	4,100 lbs – 4,700 lbs	90 lbs – 150 lbs
Standard Mount	N/A	HPU's are trailer mounted	Skid or roll cage	Skid or trailer	Roll cage
Prime Mover	Electric motor	Diesel engine/Hydraulic fluid	Air operated reciprocating diaphragm	Diesel engine	Gasoline engine
Casing Material	Cast iron, aluminum and stainless steel	Cast iron or carbon steel	Aluminum, stainless steel, and polypropylene	Cast iron or ductile iron	Aluminum
Seal Type	Tandem, oil lubricated.	Tungsten/tungsten or carbon/ Ni-hard steel	N/A	Silicon carbide and tungsten carbide	Silicon carbide; grease lubricated
Safety Features	Circuit breaker and motor overload protection in NEMA 3R enclosures.	High water temperature and low oil pressure shutdowns on diesel engines. Hydraulic system overpressure protection.	No fuel handling required. No electrical hook-ups required.	Coupling guards; high water temperature and low oil pressure shutdowns on diesel engines.	Auto shutdown on low oil level. Roll cage.

Discontinued

VISIT www.bakercorp.com FOR ADDITIONAL SPECIFICATIONS. CALL YOUR LOCAL BRANCH FOR PRODUCT AVAILABILITY. 1-800-BAKER 12

PIPE, HOSE AND FITTINGS

BakerCorp inventories a complete range of pipe, hose and fittings in various diameters to handle any required flow capacity, including high pressure pumping. BakerCorp can exceed the requirements for any application.

ALL TYPES OF PIPE AND HOSE

- Steel
- Aluminum
- Industrial groove

HDPE FOR HIGH PRESSURE AND FLOW

- Up to 30" diameters
- Fusion machines

MULTIPLE END CONNECTORS

- Bauer
- Quick disconnect
- Camlock
- Flanged

ACCESSORIES

BakerCorp offers a variety of accessories including:

- Secondary Containment Berms
- Road Crossings
- Generators
- Fuel Tanks
- Spill Guards
- Auto-Start Options

MORE EQUIPMENT. MORE LOCATIONS. CONFORMED

BAKERCORP™

3020 Old Ranch Parkway, Suite 220
Seal Beach, California 90740
1-800-BAKER 12
1-562-430-4865 Fax
www.bakercorp.com

FILTRATION

CONFORMED

BAKERCORP™

PEOPLE. EQUIPMENT. SOLUTIONS.

TOUGH JOBS. PROVEN RESULTS.

Since 1942, BakerCorp has thrived in a very demanding business. We began by renting temporary steel storage tanks to the oilfield industry. Today, we are the largest, most experienced containment, pump and filtration company in the world with over 90 locations nationwide and international operations in Europe, Canada and Mexico. We serve a breadth of market segments including chemical, manufacturing, refining, oil and gas, construction, municipal, industrial services and environmental remediation.

BakerCorp has achieved this success by adhering to the highest standard of excellence throughout every area of our business. We stock the largest inventory of quality equipment and keep it running with the most comprehensive maintenance program in the industry. Our teams are comprised of highly-trained professionals with years of experience and vast product knowledge. Their dedication to providing customers with unparalleled, 24/7/365 personal service is constant and unwavering. From the earliest stages of your project's planning through its completion, BakerCorp will work closely with you to design the best solution based upon the specific needs of your application.

Partnering with BakerCorp on your projects means that you will work alongside professionals dedicated to providing quality solutions—integrated solutions that pull from a deep pool of talent, equipment and experience. It means that your challenges will be resolved using the most logical and comprehensive mix of tanks, pumps and filtration systems available anywhere. BakerCorp's depth of experience and reputation for innovative system design ensures your project will be brought to a successful conclusion—the first time and every time.

FILTRATION FROM BAKER. LIQUID OR VAPOR. CLEARLY SUPERIOR SOLUTIONS.

From engineered solutions to on-site services and waste management, BakerCorp provides filtration expertise in the fields of specialty media, applied science, and hazardous materials. Our team of scientists and engineers—with extensive knowledge of contaminants, environmental laws and regulations, hazardous material management and health and safety—enable us to customize solutions to meet specific project requirements for both temporary and permanent applications. And once in place, our on-site service technicians and waste management teams provide comprehensive support. BakerCorp is on call, nationwide, wherever and whenever you need us.

Whatever your needs—vapor & liquid, organic & inorganic, high-flow & low-flow—BakerCorp provides superior solutions. Specialty media applications include activated carbon, ion exchange resins, impregnated media, organoclay, sand and gravel. Our equipment lineup includes high and low-pressure carbon and specialty media vessels, odor control systems, sand filters, duplex cartridges, bag filters and auxiliary equipment.

From timely delivery, installation, pumping and vacuuming to packaging, transporting, recycling, incineration and disposition, BakerCorp offers a full complement of unsurpassed filtration systems and support services.

CONFORMED

PROVIDING PROVEN SOLUTIONS TO INDUSTRY FOR OVER 65 YEARS.

ENVIRONMENTAL REMEDIATION
- Contaminated groundwater/soil treatment
- Dredging
- MTBE, perchlorate and metals removal

OIL, NATURAL GAS AND CHEMICAL
- Tank and sump venting
- Tank cleaning and turnaround projects
- Pipeline pigging and maintenance
- Vapor recovery, amine and glycol applications
- Hydrogen sulfide and mercaptans removal

PROCESS EMISSION CONTROL
- Fugitive emission control
- Purification/separation
- Wastewater
- Municipal water and wastewater plants

CONSTRUCTION
- Removal of turbidity, organic, inorganic and metals in dewatering projects
- Odor control for sewer bypass work
- Stormwater runoff, phase II of NPDES

EMERGENCY RESPONSE
- Filtration of contaminants in natural and man-made incidents and disasters

DESIGN. INSTALLATION. ON-SITE SERVICE. BAKER IS ON CALL...NATIONWIDE.

ANATOMY OF AN INTEGRATED BAKERCORP FILTRATION SYSTEM

The diagram below shows a typical groundwater treatment system in which contaminated runoff water and soil drainage can be removed and safely disposed of before new construction begins. Contaminated water is pumped out of the excavation site and processed through several stages of increasingly fine filtration. The clean effluent is then suitable for discharge to a municipal sewer system or elsewhere.

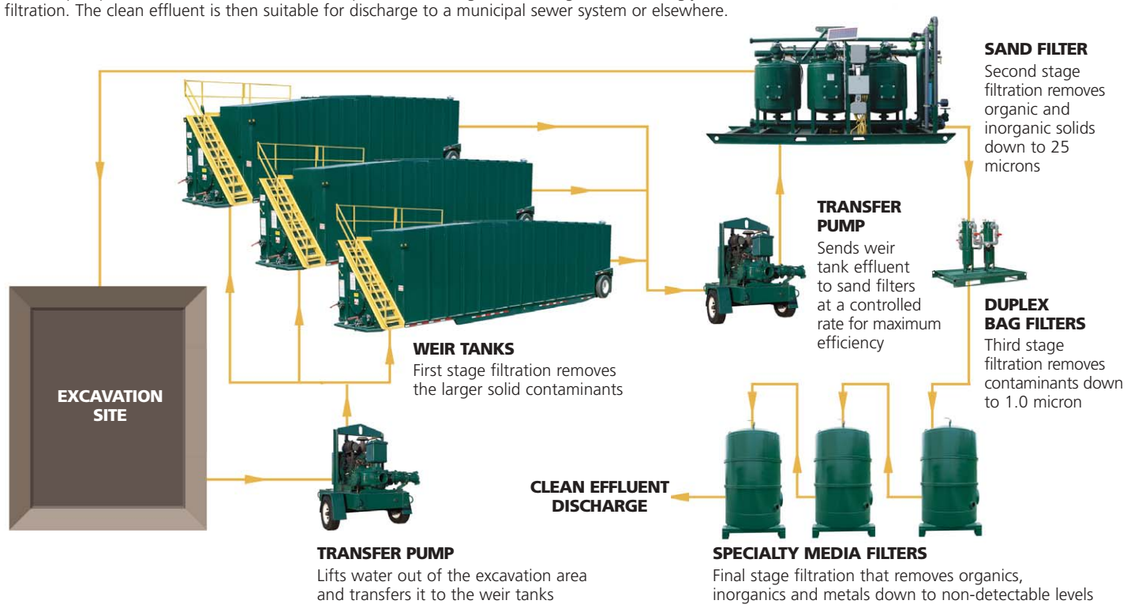

UNSURPASSED FILTRATION SYSTEMS AND SERVICES.

High and low-pressure carbon and specialty media vessels. Odor control systems. Sand filters. Duplex cartridges. Bag filters and auxiliary equipment. No other company offers a more comprehensive lineup of filtration equipment than BakerCorp. We have individual units capable of handling up to 1000 gallons per minute and multiple units can be manifolded together for greater capacity. Our specialty media applications include activated carbon, ion exchange resins, impregnated media, organoclay, sand and gravel and enable us to provide clearly superior solutions to today's filtration challenges.

Custom Engineered Solutions
Leading experts in the fields of specialty media, applied science, and hazardous materials, our scientists and engineers set the industry standard for excellence in custom application solutions. Detailed analysis of every requirement of your project ensures that the system we design meets all of your budgetary and regulatory requirements.

On-Site Services
With regional service centers nationwide, BakerCorp is able to provide an unmatched level of on-site services to complement its filtration solutions. Our specialty teams provide a turn-key, cradle-to-grave solution that includes vacuuming, packaging, transporting, recycling, incineration and land disposal of your spent filtration media. Our OSHA trained technicians, hazardous transportation network, hazardous and non-hazardous recycling facilities and fully permitted incineration facilities provide you with peace of mind while meeting regulatory compliance for any type of waste stream you may encounter.

All of our systems are delivered and installed by our localized teams of HAZ WOPER trained personnel to insure uncompromised performance.

ENVIRONMENTAL REMEDIATION

STORMWATER RUNOFF

SEWER BYPASS ODOR CONTROL

In addition to the industry's most comprehensive filtration solutions, BakerCorp's tank and pump divisions deliver the same levels of expertise, service and quality synonymous with our filtration solutions.

TANKS. NO BIGGER INVENTORY. NO BETTER SERVICE.

Nobody knows temporary containment like BakerCorp. With an unmatched inventory of tanks and accessories, we rent 17 varieties of steel tanks alone, along with poly tanks, roll off boxes, and specialty equipment.

Our unrivaled history and experience, combined with our world-class applications expertise and 24/7/365 emergency-ready support, BakerCorp gets the call on the toughest containment challenges. Our engineers analyze every aspect of your project resulting in a highly efficient solution. Then we deliver it directly to your jobsite, set it up and remove it once the project is complete.

Whatever the job—construction runoff, cooling tower cleaning, wastewater storage/treatment or environmental remediation—BakerCorp delivers.

PUMPS. MAXIMUM PERFORMANCE. ZERO HASSLE.

BakerCorp inventories an extensive fleet of the highest quality prime assist, self-prime, diesel-driven, electric drive, centrifugal and submersible pumps along with a broad range of pipe, hose and fittings. Each pump undergoes a rigorous maintenance program performed by certified mechanics to insure the highest level of dependability. Our field personnel are cross-trained to be technical experts who specialize in pumps, and nothing but. They'll point you to solutions that are cost-effective, labor-friendly and dependable.

Whatever the challenge—wastewater removal, flood control, sewer bypass or hydroblast pad water recirculation—you'll find BakerCorp on the job.

FILTRATION

	Specialty Media	Sand	Duplex Cartridge	Duplex Bag	Odor Control
Ideal Usage	Environmental and industrial contaminant removal, liquid and vapor phase.	Construction, environmental, and industrial sediment removal.	Construction, environmental, and industrial applications.	Industrial and commercial process fluids, urban runoff, groundwater discharge from construction sites or stormwater.	Sewer by-pass and other temporary odor control projects. SCAQMD approved.
Benefit	Skid mounted for portability. Backwashing capabilities. Influent/ effluent gauges and sample ports.	Fully automated. Anti-siphon valves. Easy-to-read gauges. Tool-free plumbing connections. User-friendly. Energy efficient. Lower labor costs.	Portability. Flange-to-flange connections. Continuous operation even during maintenance or filter changes. Reduced mobilization costs.	Coarse filtration in a portable unit. Low or moderate flow particulate removal. Quick installation. Meets municipal requirements for nationwide use.	Adjustable flow range. Variable frequency drive. Sound attenuation. Inlet/outlet sample ports. Simple operation. Meets local regulations.
PERFORMANCE					
Capacity	Liquid: 10 gpm – 1000 gpm; Vapor: 120 cfm – 20,000 cfm	74 gpm – 954 gpm (max normal flow range), depending on model	800 gpm	50 gpm – 200 gpm per clean filter	10,000 cfm
Pressure	Liquid: 0 psi – 75 psi; Vapor: 0 psi – 75 psi	80 psi – 100 psi depending on model	150 psi	150 psi	2 psi
Temperature	Liquid: Ambient to 150° F; Vapor: Ambient to 150° F	Limit to ambient. Consult BakerCorp if temp exceeds 100°	400° F max	w/ PVC Pipe: 140° F; w/ Steel Pipe: 225° F	150° F
Filtration	Down to non-detect levels	Down to 25 microns	Down to 0.5 micron	Down to 1.0 micron	Odor removal
Media Weight Range	Liquid: 100 lbs – 20,000 lbs; Vapor: 100 lbs – 20,000 lbs	1,800 lbs – 14,500 lbs	N/A	N/A	4,000 – 8,000 lbs
Height Range	Liquid: 30" – 190"; Vapor: 30" – 168"	6' 3" – 7' 7"	8' 5" overall	5' 0" – 12' 0"	Approx 14'
Width/Diameter Range	19" – 120"	3' 10" – 5' 0"	7' 0"	3' 8" – 4' 9"	8 0"
Length Range	Skid units available. Call for details.	10' – 21' 3"	15' 0"	4' 8" – 5' 8"	Approx 16'
Equipment Weight Range	45 lbs up. Contact BakerCorp.	1,750 lbs – 6,400 lbs	2,000 lbs	550 lbs – 900 lbs (approx)	Contact BakerCorp.
FEATURES					
Type of Media Used	Granular activated carbon, ion exchange resin, zeolite, organoclay.	Silica, sand, gravel	40" long replaceable cartridges	Filter bags, size #2.	Specialty media
Material of Construction	Carbon steel with epoxy coating on interior surfaces. Some models available in polyethylene.	Carbon steel vessels with epoxy interior coating.	304 stainless steel housings; PVC pipe.	Carbon steel and 304 stainless steel vessels.	Filter vessel is epoxy lined carbon steel with stainless steel screen.
Options	Vapor phase units available in deep bed and radial flow design.	Two, three and four pod models are available.	Combination bag/cartridge units are available.	Combination bag/cartridge units are available.	N/A

VISIT www.bakercorp.com FOR ADDITIONAL SPECIFICATIONS. CALL YOUR LOCAL BRANCH FOR PRODUCT AVAILABILITY. 1-800-BAKER 12

CONFORMED

PIPE, HOSE AND FITTINGS

BakerCorp inventories a complete range of pipe, hose and fittings in various diameters to exceed the needs of any application.

ALL TYPES OF PIPE AND HOSE

- Steel
- Aluminum
- Industrial groove

HDPE FOR HIGH PRESSURE AND FLOW

- Up to 30" diameters
- Fusion machines

MULTIPLE END CONNECTORS

- Bauer
- Quick disconnect
- Camlock
- Flanged

SPECIALTY MEDIA TO HANDLE ANY JOB

Activated Carbon—Granular, pelletized and powdered media to remove organic contaminants from vapor and liquid streams.

Impregnated Media—Effective removal of inorganic contaminants using activated carbon and zeolite based media. Impregnated with chemical reagents.

Ion Exchange Resins—Synthetically manufactured to carry an ionic charge, either positive or negative, ion exchange resins are an effective solution to highly complex applications such as perchlorate and dissoved metals removal.

Metals Removal Media—Specialty media to remove arsenic and other heavy metals.

Oil Removal Media—Specifically manufactured to remove oil and heavy organics from water. This media acts as a cost-effective prefilter for carbon adsorbers.

QUALITY ASSURANCE PROGRAM

BakerCorp has a rigorous maintenance program patterned after ISO 9000 certification guidelines. This QMS program is exclusive to BakerCorp. It ensures each and every one of our filtration units is inspected and of the highest quality each time it's ready for use by a customer.

LEVEL I—BEFORE DELIVERY

- Visual inspection of entire system including influent and effluent connections as well as gaskets, fittings and hatches to make sure they are operating properly and meet job requirements
- Load media if job requires

UPON DELIVERY:

- Review operation of bleed valve, drain valve and if applicable, isolation valves with customer
- Review plumbing—which is influent, effluent, and if customer is installing piping, torque specs
- Review any weather related issues like extreme heat or freezing temperatures

LEVEL II—UPON PICKUP

- All Level I "Before Delivery" inspections
- Inspect interior for lining condition and cleanliness

LEVEL III— MAINTENANCE CHECKUP

- Pressure test filter vessels using compressed air. Check all connections and openings for leaks
- Perform any necessary repairs found in Levels I–II

WASTE MANAGEMENT SERVICES

BakerCorp is your single source for pollution management. Our OSHA trained technicians, hazardous transportation network, hazardous and non-hazardous recycling facilities and fully permitted incineration facilities provide you with peace of mind while meeting regulatory compliance for any type of waste stream you may encounter.

- Contaminated soil & water
- Contaminated debris
- Industrial waste

MORE EQUIPMENT. MORE LOCATIONS.

CONFORMED

BAKERCORP™

3020 Old Ranch Parkway, Suite 220
Seal Beach, California 90740
1-800-BAKER 12
1-562-430-4865 Fax
www.bakercorp.com

Appendix F

UPRR Standard Plans

CONFORMED

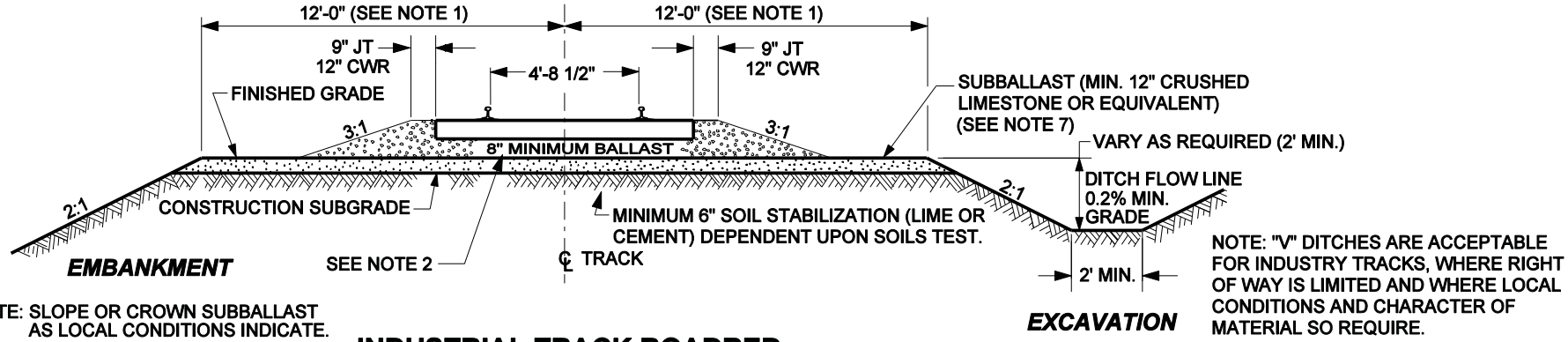

NOTE: SLOPE OR CROWN SUBBALLAST AS LOCAL CONDITIONS INDICATE.

NOTE: "V" DITCHES ARE ACCEPTABLE FOR INDUSTRY TRACKS, WHERE RIGHT OF WAY IS LIMITED AND WHERE LOCAL CONDITIONS AND CHARACTER OF MATERIAL SO REQUIRE.

INDUSTRIAL TRACK ROADBED

TYPICAL SECTION

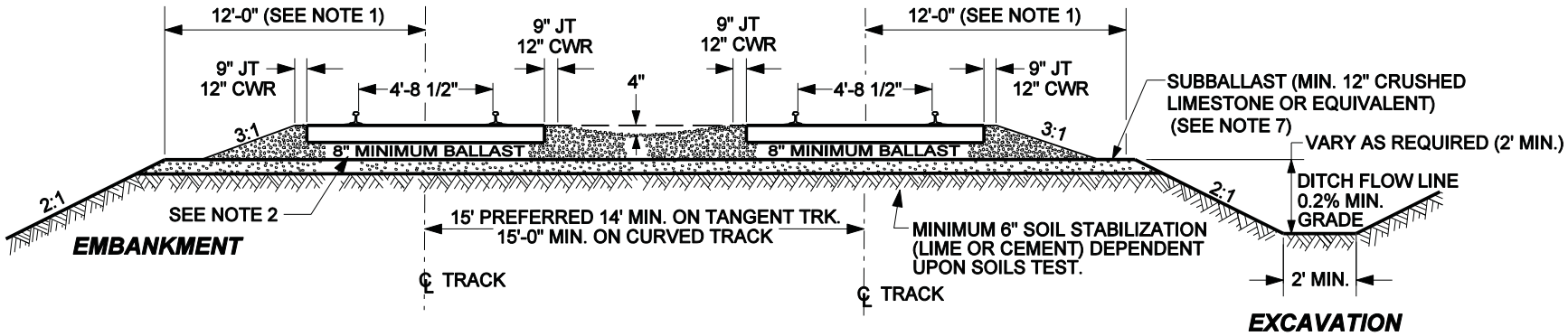

INDUSTRIAL ROADBED FOR TWO OR MORE TRACKS

TYPICAL SECTION

NOTES:

1. 12' SHOULDER WIDTH STANDARD. 11' SHOULDER MUST BE APPROVED BY CHIEF ENGINEER.
2. IF USING CONCRETE TIES - 10" MINIMUM BALLAST UNDER TIES.
3. PREFERABLY TRACKS WILL NOT BE DEPRESSED BELOW GROUND LEVEL PARTICULARLY IN SNOW AND HIGH RUNOFF TERRITORIES, TRACKS CONSTRUCTED AT OR BELOW GROUND LEVEL MUST HAVE FULL STANDARD ROADBED DITCHES.
4. ALL NECESSARY DRAINAGE FACILITIES TO DIVERT RUNOFF WATER AWAY FROM TRACKS ARE TO BE PROVIDED AS APPROVED BY UNION PACIFIC RAILROAD'S CHIEF ENGINEER OF DESIGN.
5. WALKWAYS WILL BE CONSTRUCTED TO COMPLY WITH STATE REQUIREMENTS.
6. THESE STANDARDS DO NOT APPLY TO ORE AND COAL LINES OR OTHER HEAVILY USED TRACKS.
7. REFER TO EXHIBIT "H" IF LESS THAN 12" OF SUBBALLAST IS TO BE USED.

STD DWG 0003

UNION PACIFIC RAILROAD ENGINEERING STANDARDS

ROADBED SECTION FOR INDUSTRIAL TRACK CONSTRUCTION

UNION PACIFIC

ADOPTED: AUG. 31, 2004
REVISED:
FILE NO.: 0003

STD DWG
0003

Copyright © 2004 by Union Pacific Railroad

CONFORMED

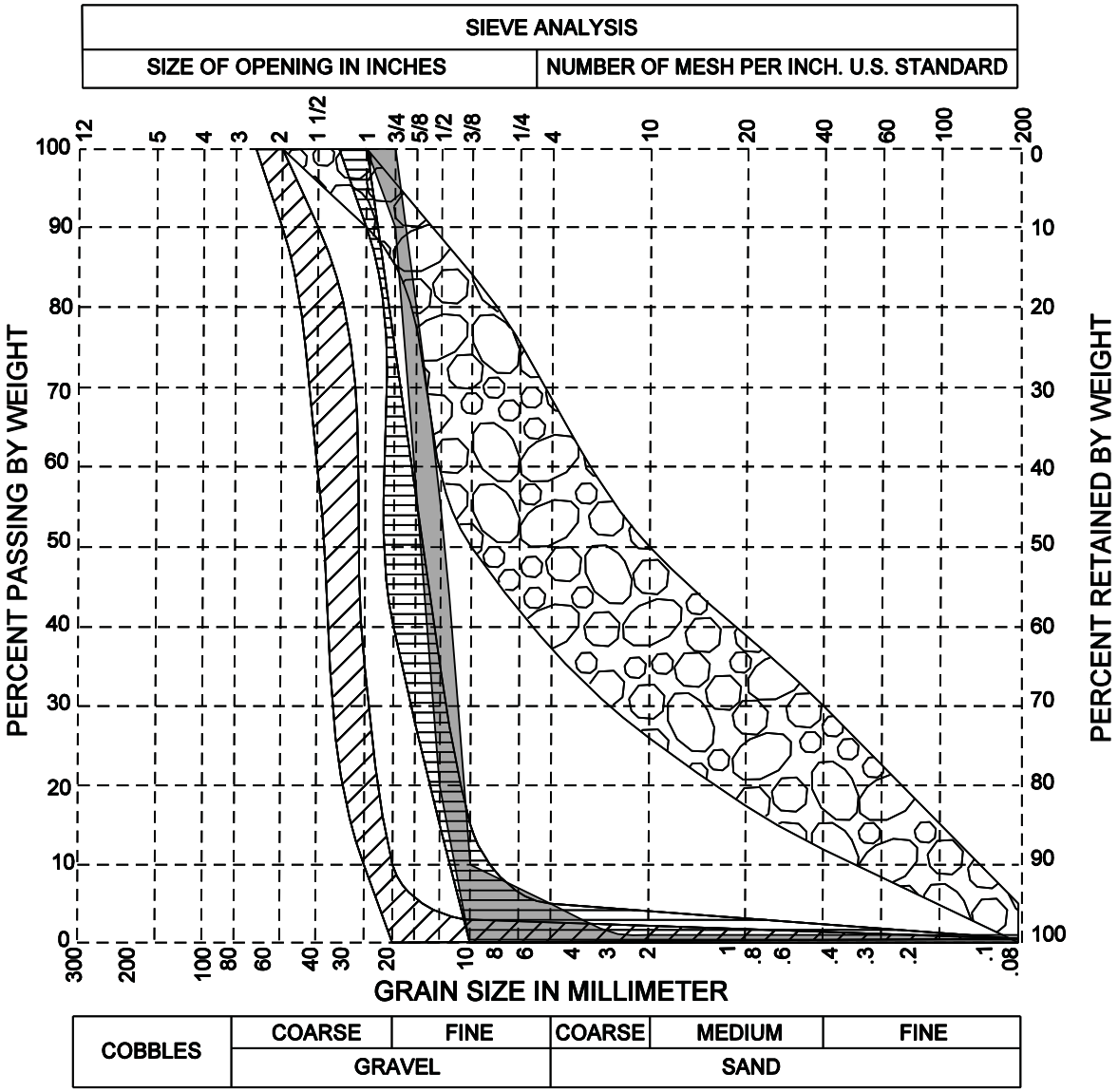

	UP BALLAST CLASS			
	1	2	3	SUB BALLAST
SQUARE OPENING	2"-3/8"	1"- NO. 4	3/4"- NO. 8	1 1/2"-0"
2 1/2"	100	——	——	——
2"	90-100	——	——	100
1 1/2"	50-80	100	——	——
1 1/4"	——	100	——	——
1"	10-35	90-100	100	90-100
3/4"	0-10	40-75	90-100	——
1/2"	0-5	15-35	20-55	——
3/8"	——	0-15	0-10	50-84
No.4	——	0-5	0-5	——
No.8	——	——	0-1	——
No.10	——	——	——	26-50
No.40	——	——	——	12-30
No.200	0-.5	0-.5	0-1	0-5

PERCENT PASSING (BY WEIGHT)
[ALL AGGREGATE SAMPLING AND TESTING PER ASTM LATEST REVISION.]

NOTES:
FOR STANDARD CROSS SECTIONS, SEE STD DWG 0001A, OR STD DWG 0002A.

SELECT MATERIAL TO BE USED AS SUB BALLAST IN POOR NATIVE SOIL CONDITIONS WHERE SPECIFIED BY CHIEF ENGINEER.

CLASS 1 AND CLASS 2 BALLAST MATERIALS ARE REQUIRED TO BE WASHED PRIOR TO LOADING.

CLASS 1 BALLAST FOR MAIN TRACK (OLD "D")

CLASS 2 BALLAST FOR SECONDARY MAIN, BRANCH AND YARD TRACK (OLD "C")

CLASS 3 BALLAST SCREENINGS FOR SIGNAL MOUNDS, ETC..

SELECT MATERIAL (SUB BALLAST - SEE NOTE)

BALLAST CLASS	ITEM NO.
1	562-0766
2	562-1432
3	562-2098
SUB BALLAST	562-5428

UNION PACIFIC RAILROAD ENGINEERING STANDARDS

BALLAST & SUBBALLAST GRADATION TABLE

UNION PACIFIC

APPROVED: VP ENGINEERING
ADOPTED: DEC. 31, 1996
REVISED: JAN. 3, 2011
FILE NO.: 0010E

STD DWG
0010E

STD DWG 0010E

Copyright © 2011 by Union Pacific Railroad

CONFORMED

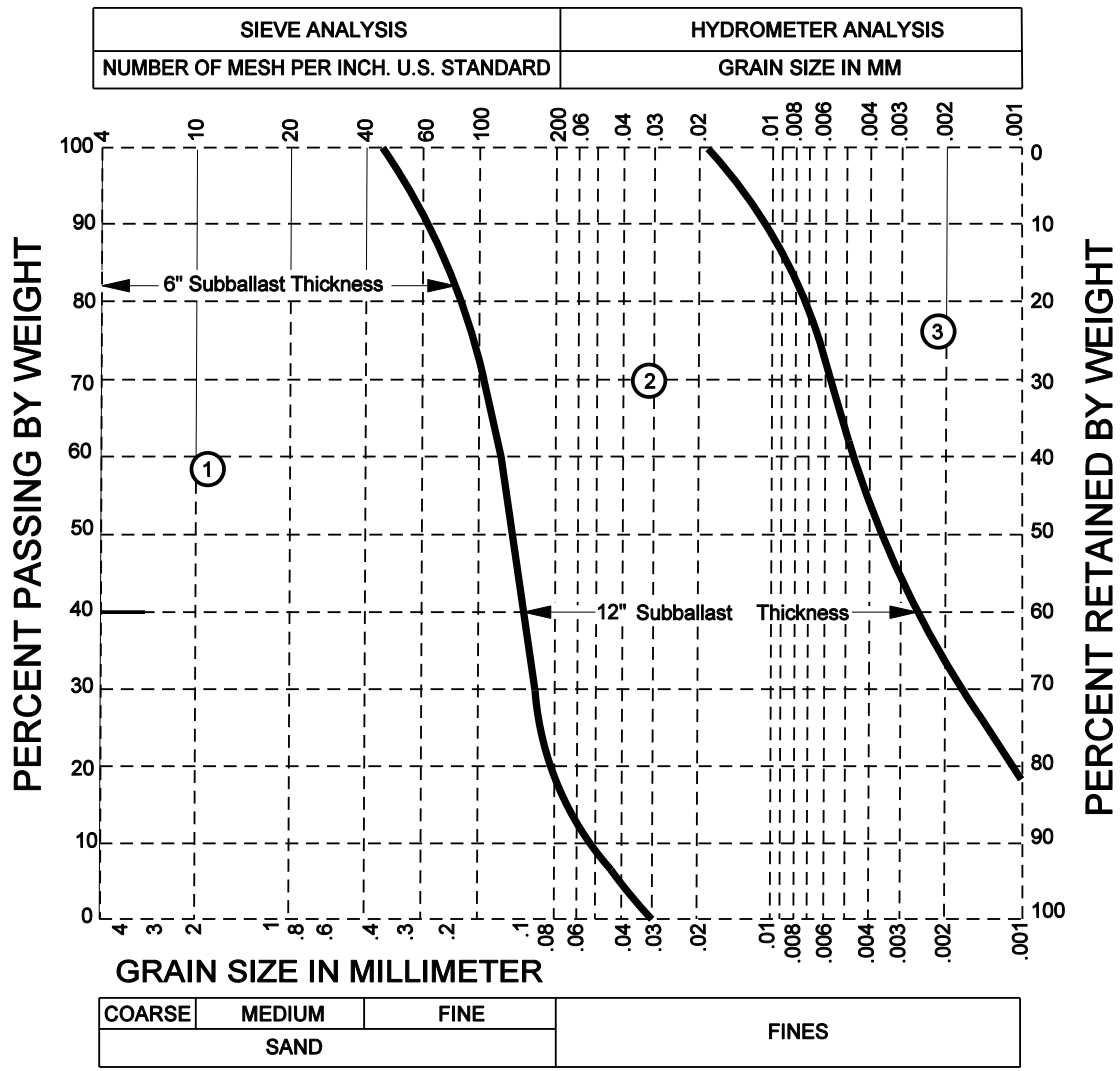

	GRADATION CURVE	
SIEVE SIZE	6" LIMIT	12" LIMIT
No. 40	100	—
No. 60	92	—
No.100	72	—
No. 200	19	—
.015	—	100
.006	—	72
.004	—	54
.001	—	19

PERCENT PASSING (BY WEIGHT)
[ALL AGGREGATE SAMPLING AND TESTING PER ASTM LATEST REVISION.]

(1) Zone of subgrade materials requiring 6" of subballast.

(2) Zone of subgrade materials requiring 12" of subballast.

(3) Additional measures will be required per recommendations of an engineering soils analysis.

UNION PACIFIC RAILROAD ENGINEERING STANDARDS

GRAIN SIZE DISTRIBUTION FOR SUBGRADE SOILS

ADOPTED: JAN. 21, 2004
REVISED: FEB. 13, 2006
FILE NO.: 0013A

STD DWG
0013A

Copyright © 2006 by Union Pacific Railroad

CONFORMED

STD DWG
0013A

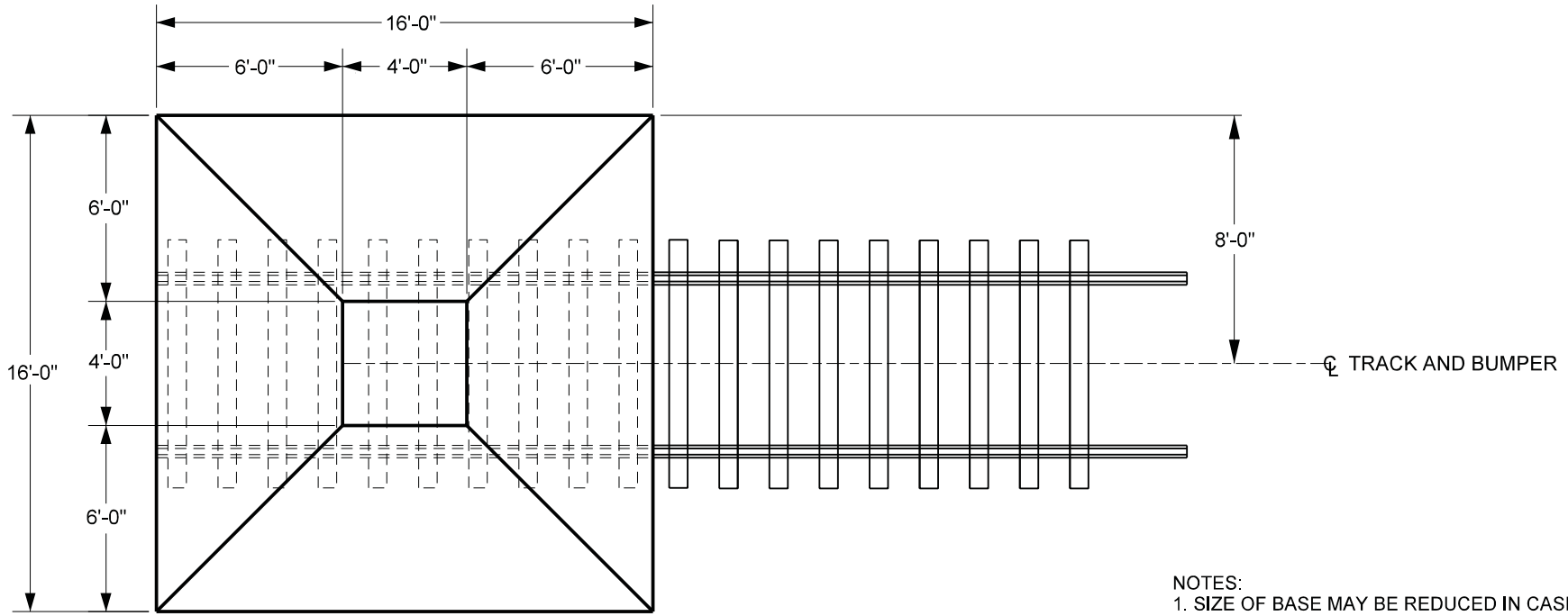

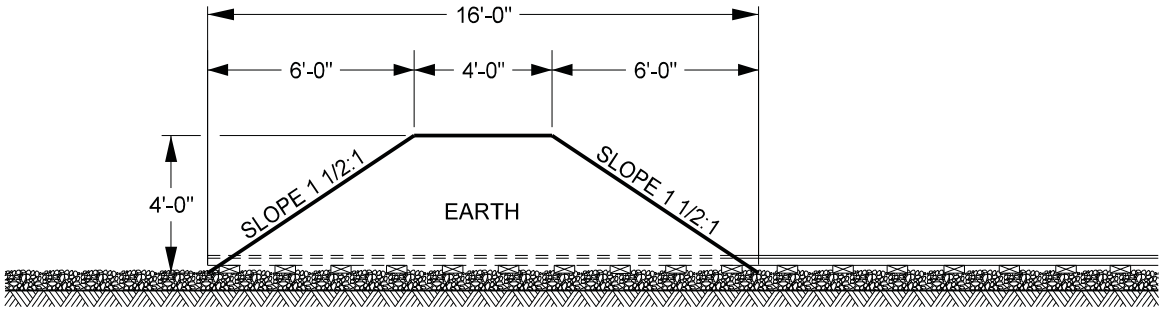

NOTES:

1. SIZE OF BASE MAY BE REDUCED IN CASES WHERE WIDTH OF ROADBED WILL NOT PERMIT PLAN TO BE FOLLOWED.
2. BUMPER TO BE 4'-0" TALL FROM BASE OF TIE.
3. IF TRACK CLEARANCE DOES NOTE ALLOW, BOTTOMS MAY BE SQUARED OFF.
4. EARTHEN BUMPER AS SHOWN HERE ON SHALL BE USED AT ALL LOCATIONS WHERE BUMPER IS REQUIRED EXCEPT ON THE AUTHORITY OF THE CHIEF ENGINEER OF MAINTENANCE TO USE A BUMPER OF SOME OTHER DESIGN.

UNION PACIFIC RAILROAD ENGINEERING STANDARDS

STANDARD EARTH BUMPER FOR END OF SPUR TRACK

APPROVED: VP ENGINEERING
ADOPTED: FEB. 16, 1965
REVISED: SEP. 4, 2012
FILE NO.: 0030B

STD DWG
0030B

STD DWG
0030B

CONFORMED

Copyright © 2012 by Union Pacific Railroad

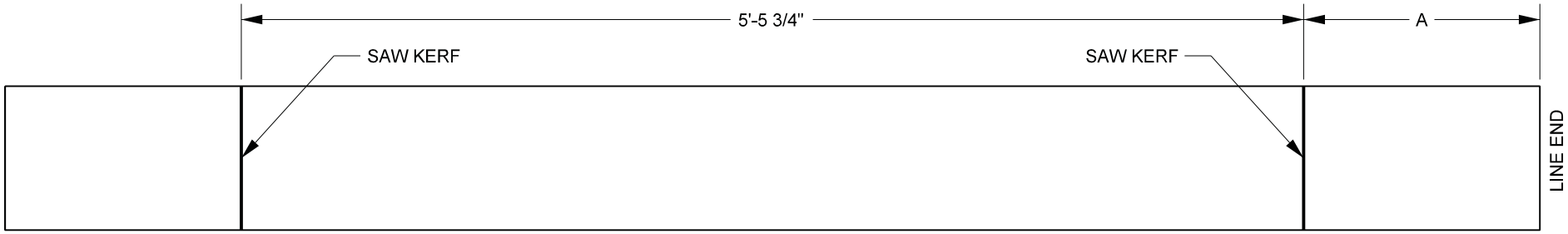

YEAR MANUFACTURED AND TIE PLANT CODE TO BE ON TOP OF TIE

DIMENSIONS FOR SAW KERFS				
PLASTIC	WESTERN SPECIES (SOFTWOOD)	HARDWOOD	TIE LENGTH	"A"
-	502-0798	502-7980	8'-0"	14.75"
-	502-0790	502-7979	8'-6"	17.75"
-	502-0799	502-7991	9'-0"	21.125"

NOTES:
1. ALL TIES TO HAVE SAW KERFS LOCATED ON THE SAP SIDE (TOP) OF TIES.

2. SAW KERF TO BE MAXIMUM OF 1/4" WIDE X 1/4" DEEP.

UNION PACIFIC RAILROAD ENGINEERING STANDARDS

WOOD AND COMPOSITE CROSS TIES

ADOPTED: DEC. 31, 1996
REVISED: JAN. 22, 2013
FILE NO.: 0210E

STD DWG
0210E

STD DWG
0210E

CONFORMED

Copyright © 2013 by Union Pacific Railroad

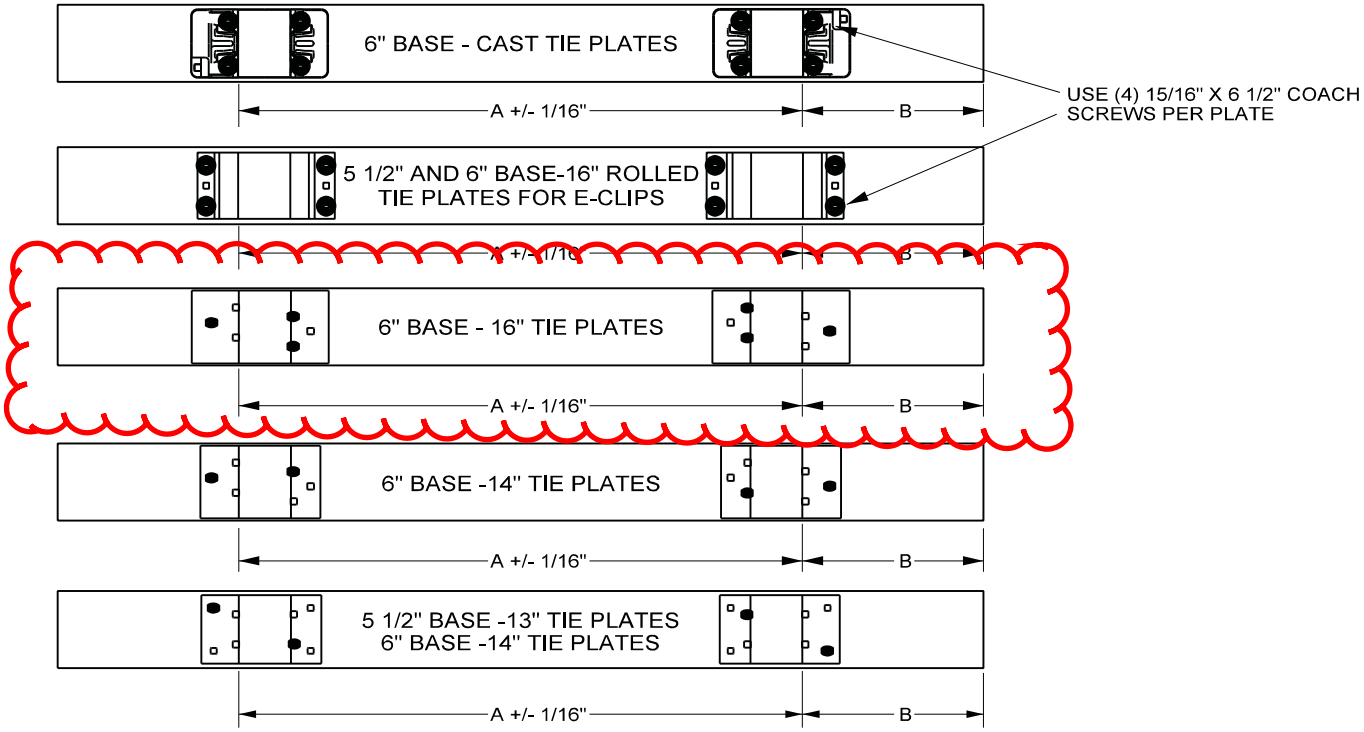

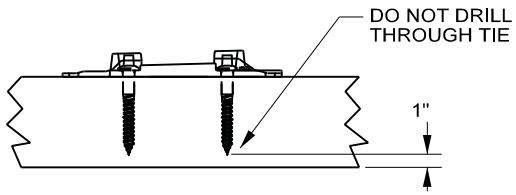

COACH SCREW CLEARANCE

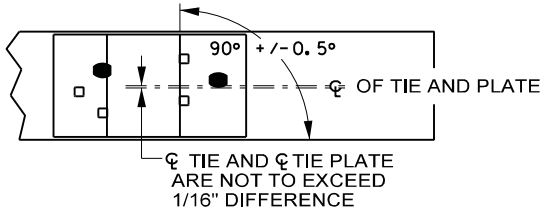

TYP. PLATE ALIGNMENT

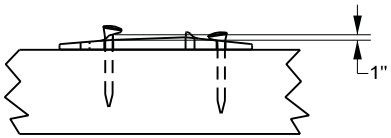

GAGE SPIKE CLEARANCE

NOTES:
PRE-BORED HOLES NECESSARY TO INSTALL COACH SCREWS WITH RESILIENT FASTENER TIE PLATES DRILLED TO ONE HALF INCH FROM BOTTOM OF THE TIE, USING FOLLOWING PRE-BORED DIAMETERS:
- 11/16"-SOFT WOOD TIES
- 3/4"-HARD WOOD & COMPOSITE TIES
- 13/16"-AZOBE TIES

RAIL GAGE SPIKES WILL HAVE 1" CLEARANCE BETWEEN RAIL SEAT AND UNDERSIDE OF SPIKE HEAD.

UNION PACIFIC RAILROAD ENGINEERING STANDARDS

PREPLATING DIMENSIONS FOR WOOD TIES

ADOPTED: DEC. 31, 1996
REVISED: NOV. 15, 2013
FILE NO.: 0211I

STD DWG
0211I
PAGE 1 OF 2

STD DWG
0211I
PAGE 1 OF 2

CONFORMED

Copyright © 2013 by Union Pacific Railroad

RAIL SIZE (ALL TIES 7" X 9")	QUANTITY SPIKES OR SCREWS	TIE PLATE	A	TIE PLATE	TIE LENGTH	B	ITEM NUMBER	
							HARDWOOD NEW PLATE	HARDWOOD SECONDHAND PLATE
5 1/2" BASE	4 SPIKES	13" SPIKE 8 HOLE MP-13	65"	554-3779-2	8'	15 1/2"	-	502-9793
					8'-6"	18 1/2"	-	502-7981
					9'	21 1/2"	-	502-9700
	8 SCREWS	15" ROLLED FOR E-CLIPS	65"	503-6342-0	8'-6"	18 1/2"	502-7902	-
					9'	21 1/2"	502-7976	-
					10'	27 1/2"	502-7975	-
6" BASE	4 SPIKES	14" SPIKE 8 HOLE MP-14	65 3/4"	554-4445-2 OR 554-3223-2	8'	15 1/8"	-	502-9787
					8'-6"	18 1/8"	-	502-6895
					9'	21 1/8"	-	502-9706
	4 SPIKES	14" SPIKE 6 HOLE BN/UP	65 3/4"	554-3230-0	8'	15 1/8"	502-7973	-
					8'-6"	18 1/8"	502-7974	-
					9'	21 1/8"	502-7977	-
	6 SPIKES	16" SPIKE 6 HOLE	65 3/4"	554-3240-0	8'-6"	18 1/8"	502-6896	-
					9'	21 1/8"	502-9797	-
					10'	27 1/8"	502-1024	-
	4 SPIKES	16" SPIKE 6 HOLE	65 3/4"	554-3240-2	8'-6"	18 1/8"	-	502-6898
					9'	21 1/8"	-	502-6952
					10'	27 1/8"	-	502-1026
	4 SPIKES	16" SPIKE 6 HOLE UP-16	65 3/4"	544-5334-2	8'-6"	18 1/8"	-	502-6899
					9'	21 1/8"	-	502-6950
					10'	27 1/8"	-	502-1028
	8 SCREWS	16" CAST SAFELOK CLIPS	65 3/4"	503-6219-0	8'-6"	18 1/8"	502-7901	-
					9'	21 1/8"	502-9799	-
					10'	27 1/8"	502-1020	-
	8 SCREWS	16" CAST SAFELOK CLIPS	65 3/4"	503-6219-2	8'-6"	18 1/8"	-	502-6900
					9'	21 1/8"	-	502-9802
					10'	27 1/8"	-	502-1022
	8 SCREWS	16" ROLLED FOR E-CLIPS	65 3/4"	503-9020-0	8'-6"	18 1/8"	502-7966	-
					9'	21 1/8"	502-7888	-
					10'	27 1/8"	502-7999	-

UNION PACIFIC RAILROAD ENGINEERING STANDARDS

PREPLATING DIMENSIONS FOR WOOD TIES

ADOPTED: DEC. 31, 1996
REVISED: NOV. 15, 2013
FILE NO.: 0211I

STD DWG
0211I
PAGE 1 OF 2

STD DWG
0211I
PAGE 1 OF 2

CONFORMED

Copyright © 2013 by Union Pacific Railroad

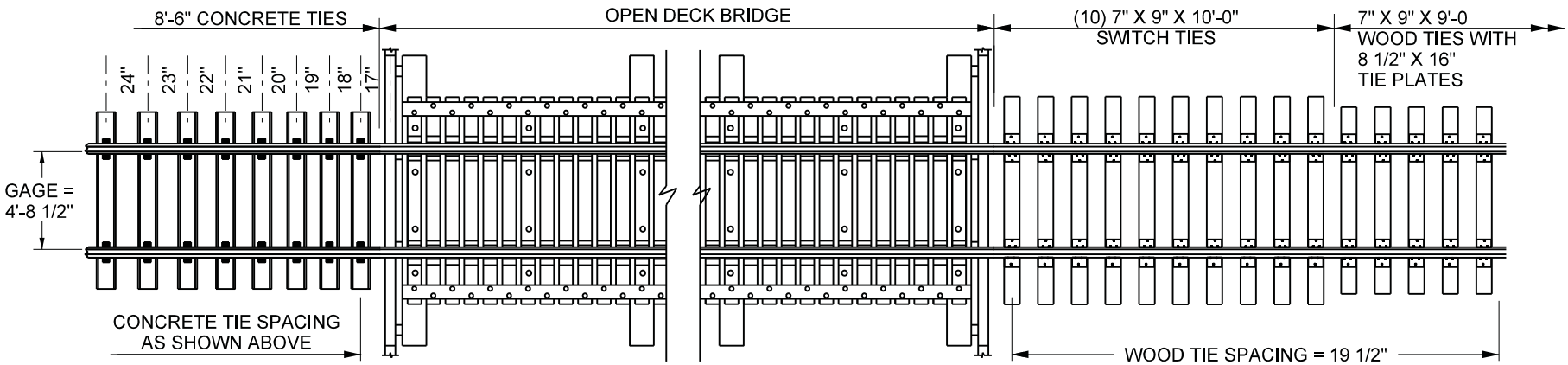

TO CONCRETE TRACK **OPEN DECK BRIDGE** **TO WOOD TRACK**

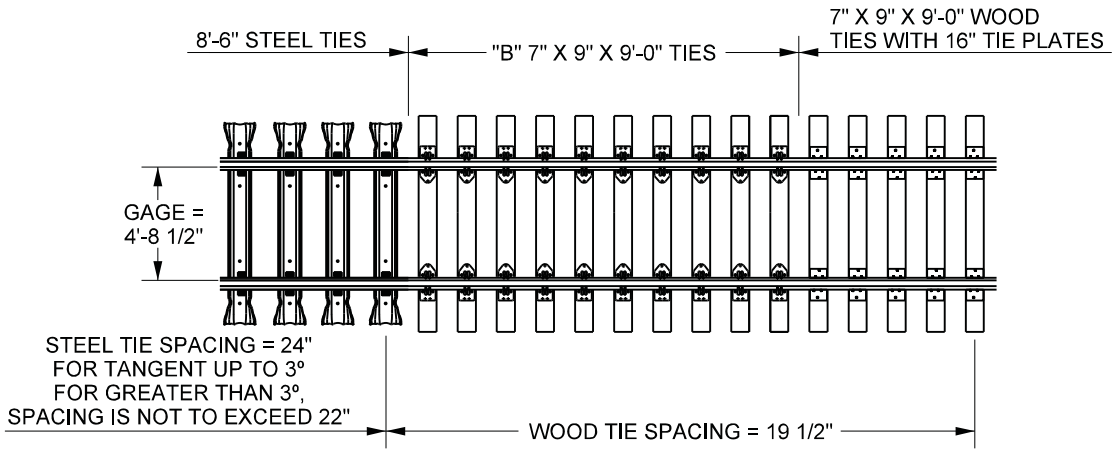

STEEL TIE TO WOOD

NOTES:

1. TRANSITION ZONES ARE REQUIRED ON ALL TRACKS WHERE MAXIMUM AUTHORIZED SPEED IS 20 MPH OR GREATER.

EXCEPTION 1: MAKING TRANSITION FROM PREMIUM WOOD TURNOUTS TO CONVENTIONAL WOOD TRACK IS REQUIRED WHEN TRACK SPEED EXCEEDS 40MPH..

2. TRANSITIONS BETWEEN CONCRETE OR STEEL TIES AND WOOD TIES SHOULD NOT BE MADE WHERE CURVATURE OR OBSTRUCTIONS SUCH AS CROSSINGS EXISTS. INSTEAD, CONCRETE OR STEEL TIES SHOULD BE EXTENDED THROUGH THE OBSTRUCTION OR CURVE BEFORE INSTALLING TRANSITION.

EXCEPTION 2: STEEL TUNNEL TIES ARE NOT TO BE INSTALLED OUTSIDE OF TUNNEL.

3. SEE PAGES 2 AND 3 FOR MORE DETAILS.

		MAXIMUM AUTHORIZED TRACK SPEED		
	TIE TYPE	0-29 MPH	30 TO 49 MPH	50 MPH AND GREATER
QTY REQ'D	"B"	10	10	10

TIE TYPE REQUIRED

"B" - 7" X 9" X 9'-0" PREPLATED TIE UPRR ITEM #502-9799
(4) SAFELOK CLIPS UPRR ITEM #503-5100

CONFORMED

UNION PACIFIC RAILROAD ENGINEERING STANDARDS

STANDARD TRANSITION ZONES

ADOPTED: JAN. 24, 1997
REVISED: FEB. 19, 2013
FILE NO.: 0220F

STD DWG
0220F
PAGE 1 OF 3

Copyright © 2013 by Union Pacific Railroad

STD DWG
0220F
PAGE 1 OF 3

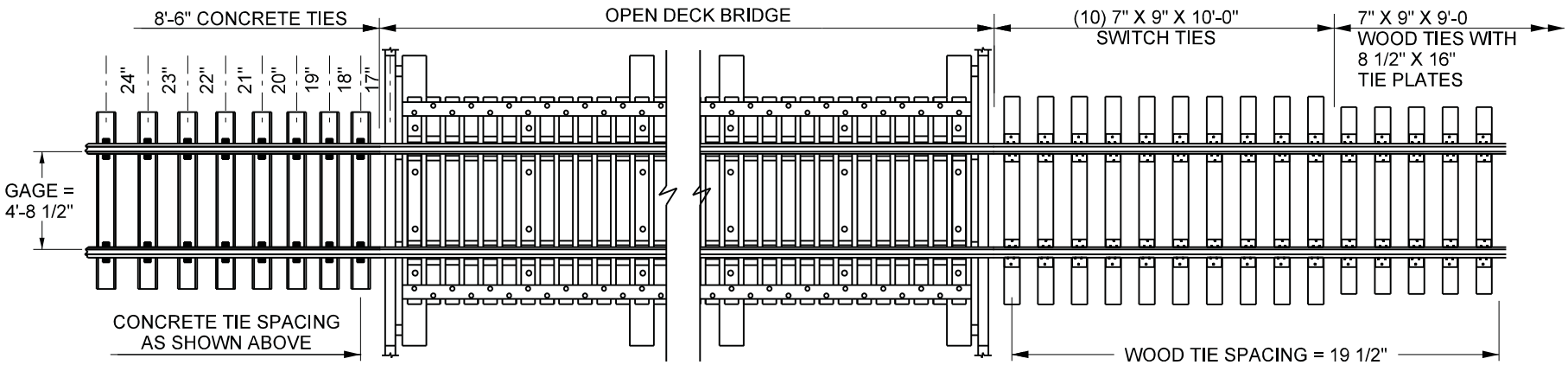

TO CONCRETE TRACK **OPEN DECK BRIDGE** **TO WOOD TRACK**

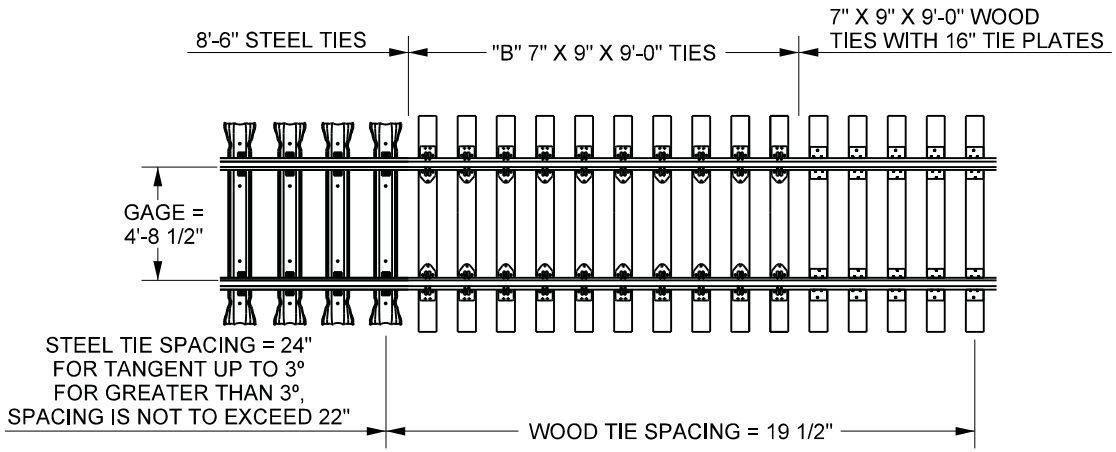

STEEL TIE TO WOOD

NOTES:

1. TRANSITION ZONES ARE REQUIRED ON ALL TRACKS WHERE MAXIMUM AUTHORIZED SPEED IS 20 MPH OR GREATER.

EXCEPTION 1: MAKING TRANSITION FROM PREMIUM WOOD TURNOUTS TO CONVENTIONAL WOOD TRACK IS REQUIRED WHEN TRACK SPEED EXCEEDS 40MPH..

2. TRANSITIONS BETWEEN CONCRETE OR STEEL TIES AND WOOD TIES SHOULD NOT BE MADE WHERE CURVATURE OR OBSTRUCTIONS SUCH AS CROSSINGS EXISTS. INSTEAD, CONCRETE OR STEEL TIES SHOULD BE EXTENDED THROUGH THE OBSTRUCTION OR CURVE BEFORE INSTALLING TRANSITION.

EXCEPTION 2: STEEL TUNNEL TIES ARE NOT TO BE INSTALLED OUTSIDE OF TUNNEL.

3. SEE PAGES 2 AND 3 FOR MORE DETAILS.

		MAXIMUM AUTHORIZED TRACK SPEED		
	TIE TYPE	0-29 MPH	30 TO 49 MPH	50 MPH AND GREATER
QTY REQ'D	"B"	10	10	10

TIE TYPE REQUIRED

"B" - 7" X 9" X 9'-0" PREPLATED TIE UPRR ITEM #502-9799
(4) SAFELOK CLIPS UPRR ITEM #503-5100

CONFORMED

UNION PACIFIC RAILROAD ENGINEERING STANDARDS

STANDARD TRANSITION ZONES

ADOPTED: JAN. 24, 1997
REVISED: FEB. 19, 2013
FILE NO.: 0220F

STD DWG
0220F
PAGE 1 OF 3

Copyright © 2013 by Union Pacific Railroad

STD DWG
0220F
PAGE 1 OF 3

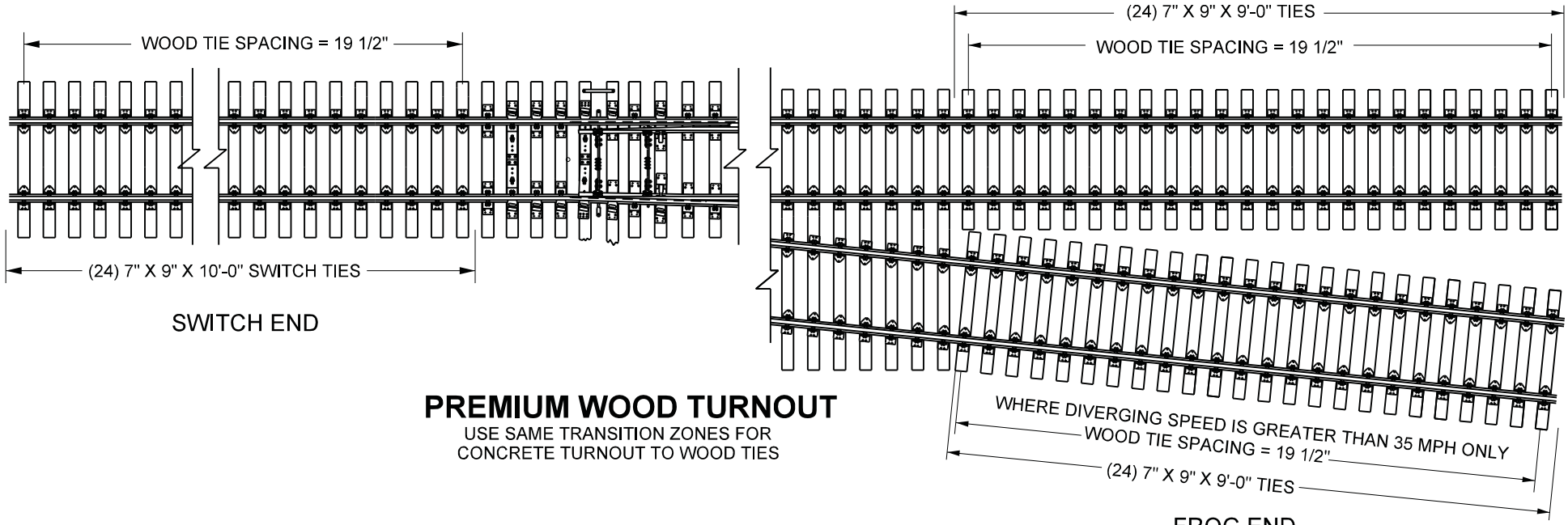

PREMIUM WOOD TURNOUT

USE SAME TRANSITION ZONES FOR
CONCRETE TURNOUT TO WOOD TIES

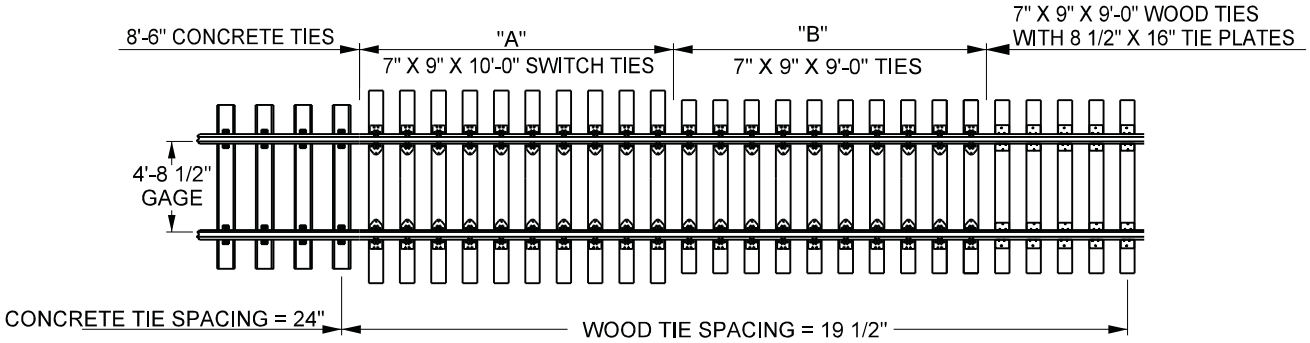

CONCRETE TIE TO WOOD

NOTES:

1) FOR CONCRETE TURNOUTS INSTALLED IN WOOD TIE TRACK, UTILIZE THE CONCRETE TIE TO WOOD TRANSITION SHOWN OFF THE LAST LONG CONCRETE TIE.

2. SEE PAGES 1 AND 3 FOR NOTES AND MORE DETAILS.

		MAXIMUM AUTHORIZED TRACK SPEED		
	TIE TYPE	0-29 MPH	30 TO 49 MPH	50 MPH AND GREATER
QTY REQ'D	"A"	0	10	20
	"B"	10	10	10

TIE TYPE REQUIRED

"A" - 7" X 9" X 10'-0" PREPLATED SWITCH TIE UPRR ITEM #502-1020
(4) SAFELOK CLIPS UPRR ITEM #503-5100

"B" - 7" X 9" X 9'-0" PREPLATED TIE UPRR ITEM #502-9799
(4) SAFELOK CLIPS UPRR ITEM #503-5100

CONFORMED

UNION PACIFIC RAILROAD
ENGINEERING STANDARDS

STANDARD TRANSITION ZONES

ADOPTED: JAN. 24, 1997
REVISED: FEB. 19, 2013
FILE NO.: 0220F

STD DWG
0220F
PAGE 2 OF 3

Copyright © 2013 by Union Pacific Railroad

STD DWG
0220F
PAGE 2 OF 3

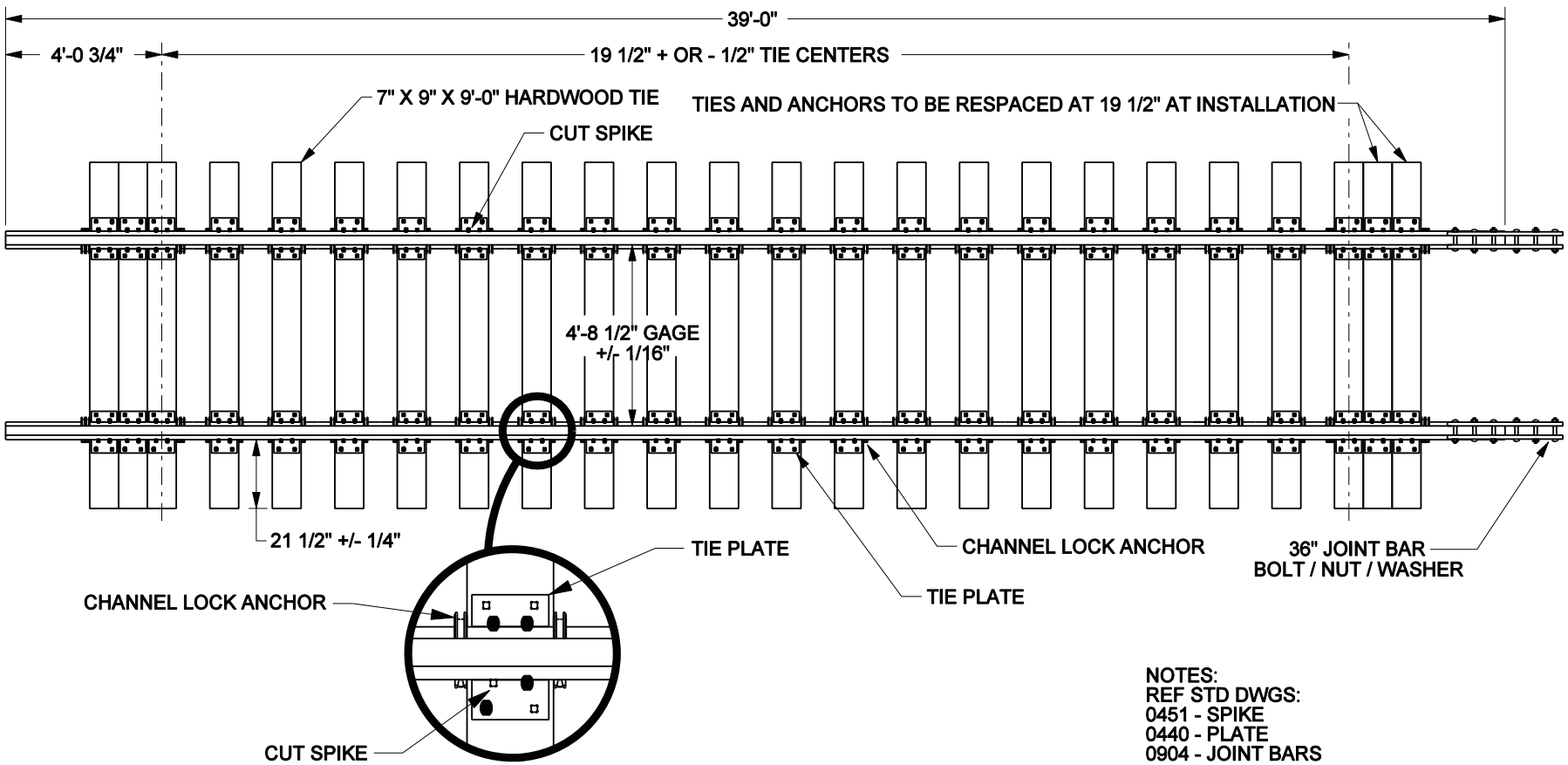

NOTES:
REF STD DWGS:
0451 - SPIKE
0440 - PLATE
0904 - JOINT BARS
0950 - TRACK BOLTS
0720 - RAIL
0457 - ANCHOR

BILL OF MATERIAL	
QTY.	ITEM.
192 EA.	SPIKE
48 EA.	TIE PLATE
04 EA.	JOINT BAR 36"
12 EA	BOLT (1" X 6") / NUT / WASHER
78 FT.	115 LB. RAIL DBE 3 1/2 X 6 X 6
92 EA.	CHANNEL LOCK ANCHOR 5 1/2"
24 EA.	TIES 7" X 9" X 9'-0" HARDWOOD

UNION PACIFIC RAILROAD
ENGINEERING STANDARDS

115 LB WOOD TRACK PANEL

ITEM NO. 561-0798

ADOPTED: APRIL 9, 2001
REVISED:
FILE NO.: 0251

STD DWG 0251

STD DWG 0251

Copyright © 2001 by Union Pacific Railroad

CONFORMED

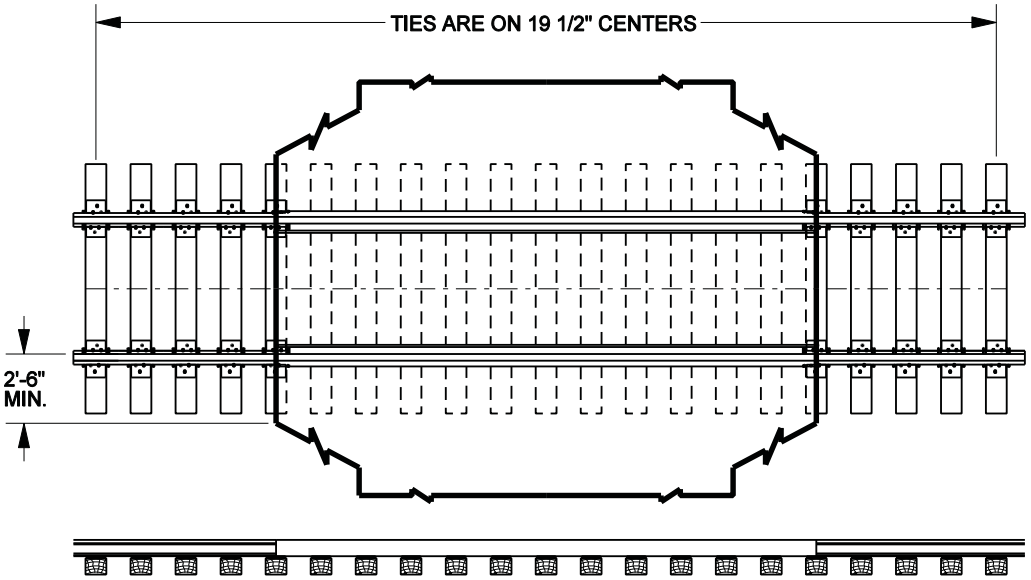

NOTE: SEE STD DWG 0301 FOR DRAINAGE DETAILS

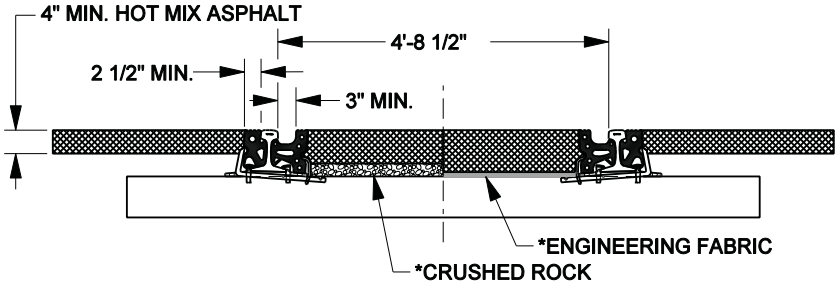

*ENGINEERING FABRIC OR 2" OF CRUSHED ROCK MUST BE USED TO PREVENT HOT MIX ASPHALT FROM BONDING TO TIES

CROSS SECTION DETAIL

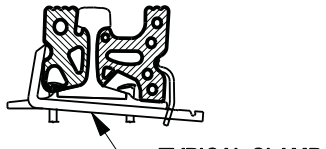

SEAL SECTION

ORDERING NOTE:
RUBBER RAIL SEAL CROSSING SECTIONS ARE TO BE ORDERED BY "TRACK FEET" IN 8'-0" INCREMENTS. EACH 8'-0" INCREMENT WILL INCLUDE (2) GAGE & (2) FIELD SIDE RAIL SEAL SECTIONS, (10) CLAMPS & ANY REQUIRED HARDWARE TO CONNECT THE SECTIONS TOGETHER.

RAIL SIZE	ITEM NO.
112-115 LB.	540-0206
132-141 LB.	540-1290

NOTES:

1) USE OF THIS STANDARD FOR NEW CONSTRUCTION IS LIMITED TO INDUSTRIAL LEAD TRACKS, AND SPUR TRACKS WHERE THE AVERAGE DAILY TRAFFIC VOLUME DOES NOT EXCEED 500. USE ON MAIN LINES IS RESTRICTED TO TEMPORARY REPAIRS TO EXISTING CROSSINGS SURFACES.

2) CROSSING SITE IS TO BE INSPECTED PRIOR TO START OF INSTALLATION TO DETERMINE THAT PROPER DRAINAGE AND SURFACE SUPPORT IS PROVIDED, TRACK GRADE IS UNIFORM.

3) FOR COMPLETE RENEWAL OF CROSSING & NEW CONSTRUCTION: TRACK STRUCTURE INCLUDING RAIL, OTM, TIES, BALLAST, AND ROADBED MUST BE IN EXCELLENT CONDITION. ALL TIES MUST BE 9 FT. LONG, SPACED AT 19 1/2" CENTERS AND EXTEND 5 TIES BEYOND END OF CROSSING. NEW 7"X9"X9' TRACK TIES TO BE INSTALLED IF NECESSARY. IF CONDITIONS WARRANT, SITE IS TO BE OVER-EXCAVATED AND CROSSING DRAINAGE SYSTEM INSTALLED USING COMPACTED, WELL-GRADED GRANULAR FILL; SUBBALLAST, GEOTEXTILE, AND PERFORATED DRAINAGE PIPE (IF REQUIRED) INSTALLED PER DETAILS OF THIS DRAWING. ADDITIONAL SITE DRAINAGE INCLUDING PROPER DRAINAGE AT EACH QUADRANT OF CROSSING SHALL BE COMPLETED TO ENSURE CROSSING DRAINAGE. SUBBALLAST SECTION TO BE A MINIMUM OF 4" WHEN COMPLETE RENEWAL OF EXISTING CROSSING. FOR NEW CONSTRUCTION, SUBBALLAST SECTION TO BE IN ACCORDANCE WITH CONSTRUCTION DESIGN STANDARDS OR AS REQUIRED BY STATE OR LOCAL AGENCIES. USE OF GEOTEXTILE AND DRAINAGE PIPE TO BE ONLY AT LOCATIONS WHERE REQUIRED BY STATE OR LOCAL AGENCIES OR WHERE SPECIFICALLY DESIGNATED BY CHIEF ENGINEER.

4) IN ALL INSTALLATIONS THE RAIL JOINTS SHOULD FALL OUTSIDE THE CROSSING AREA A MINIMUM OF 15 FEET FROM THE END OF THE CROSSING.

5) USE OF CLAMPS ARE REQUIRED IN EACH TIE CRIB WITHIN THE LIMITS OF THE CROSSING. CLAMPS MUST BE ATTACHED PRIOR TO PLACEMENT OF ASPHALTIC CONCRETE (SEE SECTION DETAILS).

6) HOT MIX ASPHALTIC CONCRETE MUST COMPLY WITH STATE D.O.T. SPECIFICATIONS AND BE PLACED IN 2 INCHES MINIMUM & 4 INCHES MAXIMUM LIFTS. CARE MUST BE TAKEN DURING COMPACTION OF ASPHALT TO PREVENT DAMAGE TO HOLD DOWN CLAMPS OR RUBBER. ASPHALT SHOULD BE ROLLED PARALLEL TO THE RAIL UNTIL THE FINAL LIFT AND COMPACTION. FINAL LIFT OF ASPHALT IS TO BE LEVEL WITH THE TOP OF RAIL FOR 30 INCHES FROM THE FIELD SIDE OF THE RAIL.

7) SLOPE EDGE OF PAVING TO RETURN TO ORIGINAL EDGE OF PAVING ALIGNMENT. LENGTH OF TRANSITION WILL DEPEND ON LOCAL CONDITIONS.

8) AT THE TIE-IN POINT WITH THE EXISTING PAVEMENT, THE OLD PAVEMENT MUST BE CUT DOWN A MINIMUM 2" TO ELIMINATE A FEATHER EDGE ON THE NEW PAVEMENT.

9) USE STATE D.O.T. SPECIFICATION FOR THE ASPHALT SPRAY TACK COAT.

10) ENVIRONMENTAL RULES OF THE GOVERNMENT BODY HAVING AUTHORITY WILL BE FOLLOWED WHEN DISPOSING OF THE PAVEMENT REMOVED FROM THE CROSSING.

11) MATERIAL USED ON GAGE SIDE RAIL SEAL SHALL HAVE AN ELECTRICAL RESISTANCE OF A MINIMUM OF 10 MEGOHMS AT 500 VOLTS DC.

12) REPORT CROSSING GATE MALFUNCTIONS TO 24 HR UPRR CROSSING HOT LINE AT 1-800-848-8715.

13) ALL EXCEPTIONS TO THIS PLAN MUST BE APPROVED BY THE CHIEF ENGINEER.

UNION PACIFIC RAILROAD ENGINEERING STANDARDS

LIGHT DUTY ROAD CROSSING ASPHALT WITH RUBBER SEAL SECTIONS

UNION PACIFIC

ADOPTED: FEB. 3, 2001
REVISED: DEC. 17, 2001
FILE NO.: 0302A

STD DWG
0302A

STD DWG
0302A

Copyright © 2001 by Union Pacific Railroad

CONFORMED

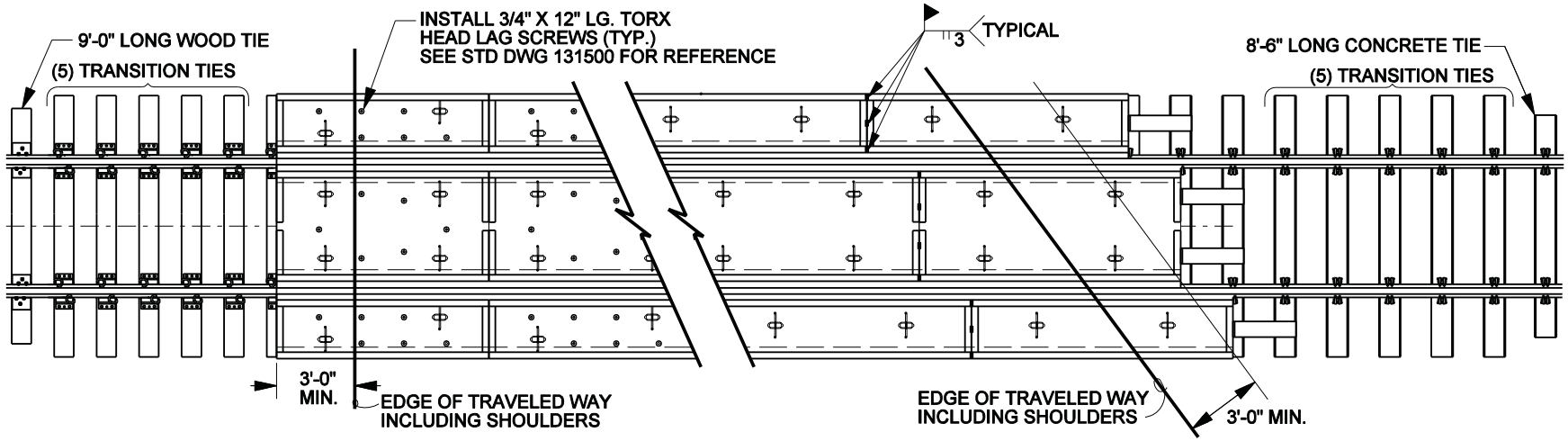

PLAN VIEW OF PANEL WITH TIMBER TIES

PLAN VIEW OF PANEL & JOINT WELD LOCATION W/CONCRETE TIES

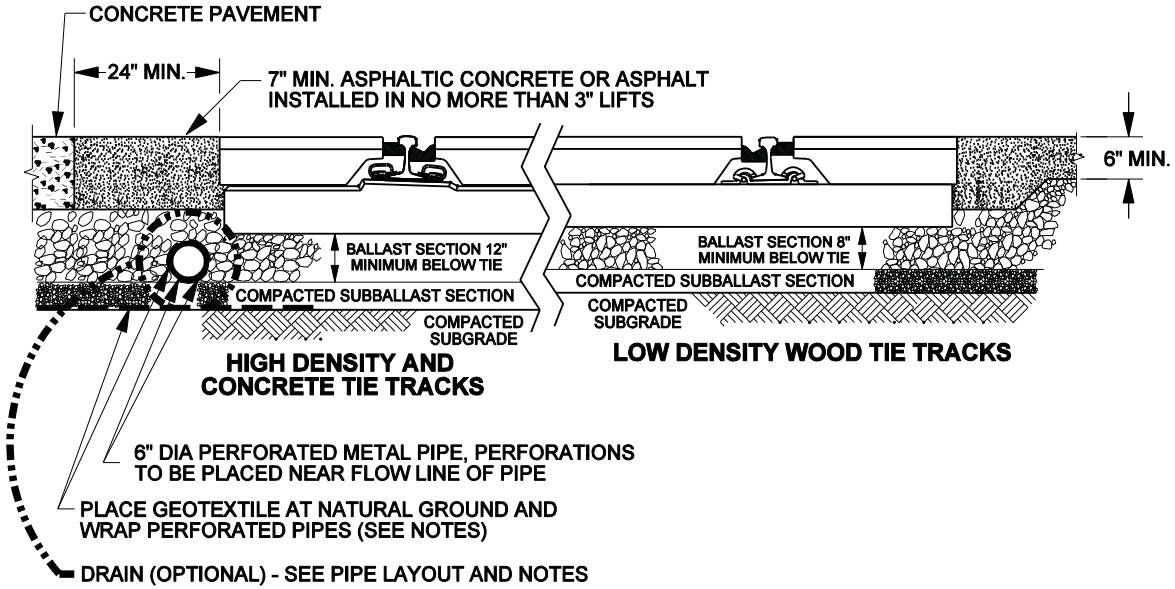

TYPICAL BALLAST AND ASPHALT DETAIL

NOTES:
SEE PAGE 2 FOR NOTES AND MORE DETAILS.

UNION PACIFIC RAILROAD ENGINEERING STANDARDS

INSTALLATION OF ROAD CROSSINGS W/ PRECAST CONCRETE PANELS

APPROVED: VP ENGINEERING
ADOPTED: DEC. 19, 1987
REVISED: JAN. 17, 2011
FILE NO.: 0304H

STD DWG
0304H
PAGE 1 OF 2

STD DWG
0304H
PAGE 1 OF 2

Copyright © 2011 by Union Pacific Railroad

CONFORMED

NOTES:

1. CROSSING PANEL SUPPORT THROUGH THE CROSSING MUST BE UNIFORM. CONCRETE TIE SPACING IS TO BE A MAXIMUM OF 24" CENTER TO CENTER. WOOD TIE SPACING TO BE MAXIMUM OF 19 1/2" CENTER TO CENTER. TIE SPACING MUST BE ADJUSTED TO SUPPORT THE ENDS OF THE PANELS

2. CROSSING SITE IS TO BE INSPECTED PRIOR TO START OF INSTALLATION TO DETERMINE THAT PROPER DRAINAGE AND SURFACE SUPPORT IS PROVIDED, TRACK GRADE IS UNIFORM AND EXISTING TIES ARE AT LEAST 10' LONG.

3. IF CONDITIONS WARRANT, SITE IS TO BE OVER-EXCAVATED AND CROSSING DRAINAGE SYSTEM INSTALLED USING COMPACTED, WELL GRADED GRANULAR FILL; SUBBALLAST, GEOTEXTILE AND PERFORATED DRAINAGE PIPE (IF REQUIRED) INSTALLED PER DETAILS OF THIS DRAWING.

4. ADDITIONAL SITE DRAINAGE INCLUDING PROPER DRAINAGE AT EACH QUADRANT OF CROSSING SHALL BE COMPLETED TO ENSURE CROSSING DRAINAGE.

5. PRECAST PANELS ARE TO BE HANDLED AND SUPPORTED AT SPECIFIED LIFTING INSERT LOCATIONS ONLY. LIFTING EQUIPMENT AND CONNECTION INSERTS ARE TO BE PROPERLY SIZED TO HANDLE THE LENGTH OF PANELS BEING INSTALLED. RING LIFTING DEVICES ARE AVAILABLE FROM COMPANY WAREHOUSE

6. APPROACH ASPHALT ROADWAY PAVING IS TO MEET STATE DOT HIGHWAY SPECIFICATIONS AND INSTALLED ACCORDINGLY. ASPHALT IS TO BE INSTALLED WITH PAVER WITH MAXIMUM 3" LIFTS AND LAID PARALLEL TO CROSSING TO MINIMIZE APPROACH SETTLEMENTS.

7. GEOTEXTILE AND PIPE TO BE INSTALLED ONLY AT LOCATIONS WHERE REQUIRED BY STATE OR LOCAL AGENCIES OR WHERE DESIGNATED BY CHIEF ENGINEER.

8. GALVANIZED ELASTIC FASTENERS ARE TO BE USED WITHIN THE CROSSING AREA. PANDROL E-CLIPS TO BE USED ON WOOD TIE CROSSINGS AND SAFELOK CLIPS ON CONCRETE TIE CROSSINGS.

9. ALL RAIL JOINTS IN CROSSING AREA TO BE WELDED, DO NOT INSTALL BOLTED JOINT BARS.

10. REPORT CROSSING GATE MALFUNCTIONS TO 24 HR UPRR CROSSING HOT LINE AT 1-800-848-8715.

11. ALL EXCEPTIONS TO THIS PLAN MUST BE APPROVED BY THE CHIEF ENGINEER.

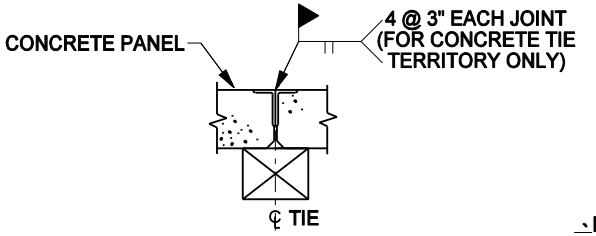

JOINT BETWEEN PANELS

INTERIOR JOINTS BETWEEN PANELS MUST REST ON CENTER LINE OF A WOOD OR CONCRETE TIE AS SHOWN

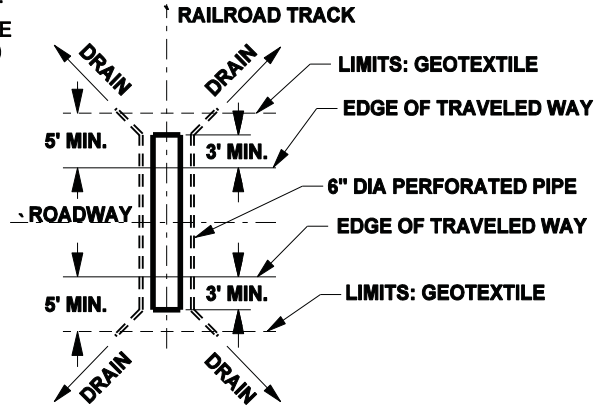

TYPICAL PIPE LAYOUT

NOTE:
GEOTEXTILE & PIPE TO BE INSTALLED ONLY AT LOCATIONS WHERE REQUIRED BY STATE OR LOCAL AGENCIES OR WHERE DESIGNATED BY CHIEF ENGINEER.

REQUIRED COMPONENTS	
RING LIFTING DEVICE	410-1371
3/4" TORX SCREW FOR WOOD TIES (STD DWG 131500)	130-5400
ELASTOMERIC BEARING PAD FOR 141 LB. RAIL ON WOOD TIES	540-0203
CONFORMAL ELASTOMERIC BEARING PAD FOR 10'-0" CONCRETE TIES	503-6315
CONFORMAL ELASTOMERIC BEARING PAD FOR 8'-6" CONCRETE TIES	503-6312
END RESTRAINT FOR CONCRETE TIES (ONLY)	540-1925

OPTIONAL COMPONENTS (SET INCLUDES 6 PIECES)	
20' SECTION 6" PERFORATED PIPE	510-3201
6" ADJUSTABLE ELBOW	510-3557
6" PIPE BANDS	510-3379
100' ROLL GEOTEXTILE	550-0119

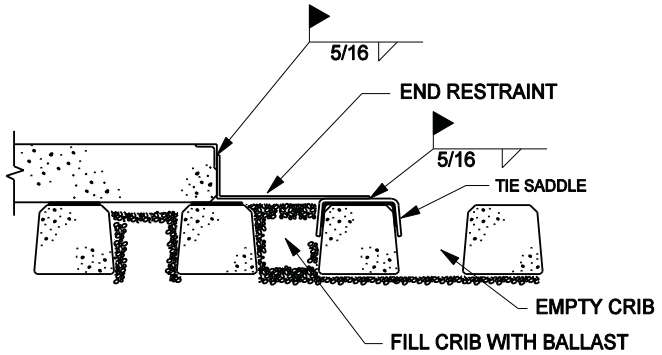

END RESTRAINT DETAIL (FOR CONCRETE TIES ONLY)

UNION PACIFIC RAILROAD ENGINEERING STANDARDS

INSTALLATION OF ROAD CROSSINGS W/ PRECAST CONCRETE PANELS

APPROVED: VP ENGINEERING
ADOPTED: DEC. 19, 1987
REVISED: JAN. 17, 2011
FILE NO.: 0304H

STD DWG 0304H PAGE 2 OF 2

STD DWG 0304H PAGE 2 OF 2

Copyright © 2011 by Union Pacific Railroad

CONFORMED

MATERIAL SPECIFICATIONS:

1) STRUCTURAL STEEL SHALL CONFORM TO ASTM A-36 SPECIFICATIONS. WELDING TO BE PER AWS CODE.

2) ALL EXPOSED STEEL TO RECEIVE ONE COAT PRIMER.

3) END ANGLES FOR GAGE PANEL SHOULD HAVE 3" GAP MINIMUM TO IMPROVE SHUNT RESISTANCE. REINFORCING MATERIAL AND CLADDING TO BE CONSTRUCTED TO MEET SHUNTING REQUIREMENT. A NON-CONDUCTIVE SPACER TO BE ATTACHED TO GAGE FRAME.

4) CLADDING ON ENDS OF PANELS SHOULD EXTEND BEYOND CONCRETE 1/8" (+1/8", -0") TO IMPROVE MATCH WITH ADJACENT PANELS.

5) REINFORCING STEEL SHALL CONFORM TO CURRENT ASTM A615 SPECIFICATION, GRADE 60. IF ANY WELDING OF REINFORCEMENT STEEL IS REQUIRED, MATERIAL SHALL CONFORM TO ASTM A706 SPECIFICATION, GRADE 60.

6) CONCRETE MATERIAL MIXING, PLACING AND CURING TO BE IN ACCORDANCE WITH PCI "MANUAL FOR QUALITY CONTROL: PRECAST AND PRESTRESSED CONCRETE." MANUAL 115, EDITION 4. CEMENT SHALL HAVE NO MORE THAN 0.6% TOTAL ALKALI CONTENT. MAXIMUM WATER/CEMENT RATIO=0.44
(BY WEIGHT). AIR ENTRAINMENT=6%+/- 1% IN PLASTIC CONCRETE. SLUMP 3" MAXIMUM.

7) COPIES OF THE CONCRETE DESIGN MIX TO BE SUBMITTED TO RAILROADS FOR APPROVAL PRIOR TO THE START OF THE CASTING OPERATION.

8) TOP SURFACE SHALL BE NON-CRACK DESIGN AND IS TO BE SEALED TO PREVENT ION MIGRATION DUE TO SALTING.

9) CURING SHALL FOLLOW THE RECOMMENDATIONS AND PROCEDURES OF PCI IN 4TH EDITION DIVISION 4.

10) 3/16" WEEP/INSPECTION HOLES SHALL BE PLACED EVERY 2-FT. MIN. ALONG THE TOP OF THE STEEL FRAME ALONG A LINE 3/4" FROM OUTSIDE EDGE.

11) FLANGEWAY FILLER TO BE PERMANENTLY PREATTACHED AND HAVE THE FOLLOWING PROPERTIES:

* A SAMPLE SECTION OF THE FLANGEWAY MATERIAL SHALL BE PHYSICALLY TESTED BY APPLYING A LATERAL FORCE OF 10 LB/IN AT 50 DEGREES CELSIUS. THE MAXIMUM LATERAL DISPLACEMENT OF THE TEST IS NOT TO EXCEED 1/4" (CROSSING TYPE 10C ONLY). TEST RESULTS MUST BE SUBMITTED FOR RAILROAD APPROVAL.

* MANUFACTURER TO DESIGN THE PREATTACHED FLANGEWAY FILLER TO ALLOW FOR REMOVAL OF PANELS FOR MAINTENANCE WITHOUT DAMAGING THE FLANGEWAY FILLER OR ANY OTHER COMPONENTS DESIGNED TO HOLD IT TOGETHER.

* SEE PAGE 2 FOR MATERIAL SPECIFICATIONS.

TOLERANCES:

1) OUT OF SQUARE 3/16" (MEASURED ALONG THE DIAGONAL)

2) LENGTH, WIDTH, AND THICKNESS: +/-1/8"

3) THE BOTTOM SURFACE, WHICH WILL BE IN CONTACT WITH THE TIES, SHALL NOT UNDULATE IN ANY DIRECTION MORE THAN 3/32". SEE SPECIAL TESTING NOTE 3 BELOW.

4) REINFORCEMENT PLACEMENT SHALL BE +/-3/4" HORIZONTAL, +/-1/8" VERTICAL.

FINISH:

1) ALL RECESSES AND MINOR CONCRETE SPALLS ARE TO BE FILLED AND FINISHED TO THE PANEL DIMENTIONS USING THE PROPER BONDING AGENT AND REPAIR MATERIAL SURFACE OF THE REPAIRED AREA IS TO MATCH THE COLOR AND TEXTURE OF THE SURROUNDING AREAS.

2) THE DRIVING SURFACE IS TO HAVE A LIGHT BROOM FINISH OR AS APPROVED BY RAILROADS. THE ADDITION OF WATER TO THE CONCRETE SURFACE FINISH DURING CASTING IS NOT PERMITTED.

SPECIAL TESTING:

1) TWICE ANNUALY, VENDORS SHALL SUBMIT (VIA AN INDEPENDENT TESTING LABORATORY TO THE RAILROADS) THE FOLLOWING TEST ON THE APPROVED MIXED DESIGN
* ASTM C666 FREEZE/THAW
* ASTM C227 MORTAR BAR METHOD
* ASTM C1260 AT TOTAL ALKALI BURDEN = 0.06%

2) GAGE PANELS SHALL BE DESIGNED WITH SHUNT RESISTANT FEATURES IN ORDER TO PROVIDE A MINIMUM ELECTRICAL RESISTANCE IN ACCORDANCE WITH THE STANDARD ELECTRICAL TEST (DWG 500930).

3) A REPRESENTATIVE SAMPLE OF PANELS SHALL BE CHECKED PERIODICALLY FOR BOTTOM FLATNESS BY USING A STRAIGHT EDGE CALIBRATED TO WITHIN +/-1/32" AND A TAPER GAGE AS FOLLOWS:
8 POSITIONS OF FLATBAR (—) CHECK FLATNESS AT EACH POSITION USING TAPER GAGE.

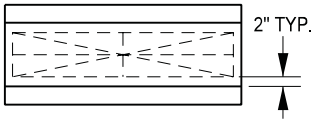

GENERAL:

1) THE MANUFACTURER SHALL BE ISO 9000 OR AAR M-1003 CERTIFIED. ALL TESTING PERSONNEL SHALL BE A MINIMUM OF ACI LEVEL I CERTIFIED.

2) THE FABRICATOR SHALL BE RESPONSIBLE FOR LOADING AND PROPERLY SECURING ALL PRECASTCONCRETE MEMBERS FOR SHIPMENT.

3) THE MANUFACTURER SHALL WARRANTY PRODUCT FOR A MINIMUM OF TEN YEARS AGAINST DEFECTS IN MATERIALS AND WORKMANSHIP.

4) MAUNFACTURER TO PERMANENTLY MARK EACH PANEL WITH A CONCRETE IMPRINT FOR SIZE OF RAIL, WEIGHT OF PANEL, MANUFACTURER'S I.D., MONTH/DAY/YEAR OF MANUFACTURE, AND CROSSING TYPE. END OF EACH PANEL TO BE STENCILED PAINTED WITH SIZE OF RAIL, WEIGHT OF PANEL AND CROSSING TYPE.

UNION PACIFIC RAILROAD ENGINEERING STANDARDS

GENERAL SPECIFICATIONS FOR ROAD CROSSINGS WITH CONCRETE PANELS

UNION PACIFIC

ADOPTED: OCT. 24, 2013
REVISED:
FILE NO.: 0308

STD DWG
0308
PAGE 1 OF 2

STD DWG
0308
PAGE 1 OF 2

CONFORMED

Copyright © 2013 by Union Pacific Railroad

NON-CONDUCTIVE FILLER COMPOUND MATERIAL SPECIFICATIONS

AN ALL EPDM BASED COMPOUND IS TO BE USED IN THE UPRR ATTACHED CONCRETE PANEL FILLERS. IT IS TO HAVE SUPERIOR WEATHERING, AGING AND HEAT RESISTANCE CHARACTERISTICS AND IS TO BE MADE USING ONLY NON-CONDUCTIVE INGREDIENTS AND PIGMENTED SO IT IS A LIGHT NON-MARKING GRAY COLOR.

THE COMPOUND MEETS LINE CALLOUT ASTM D2000 3BA714, A14, B13, C12, F17, Z1, Z2, Z3, Z4, Z5, Z6, Z7
Z1 = ULTIMATE ELONGATION INCREASE TO 400%
Z2 = HARDNESS INCREASE TO 75 +/- 5 SHORE A
Z3 = ADD COMPRESSION SET AT 257°F
Z4 = ADD FLUID RESISTANCE TEST
Z5 = ADD VOLUME RESISTIVITY TEST
Z6 = ADD MEGGAR TEST
Z7 = ADD TEAR STRENGTH

PHYSICAL PROPERTIES	UNIT	REQUIRED	LIMIT	TEST METHOD	TESTING FREQUENCY		
					BATCH	5TH BATCH	ANNUALLY
TENSILE STRENGTH	PSI	1400	MIN	ASTM D412		X	
ELONGATION	% (Z1)	400	MIN	ASTM D412		X	
HARDNESS	SHORE "A" (Z2) DURO POINTS	75	+/- 5	ASTM D2240	X		
HEAT RESISTANCE:				ASTM D573 70 HRS @ 212°F			X
TENSILE STRENGTH	% CHANGE	-25	MAX				
ELONGATION	% CHANGE	-25	MAX				
HARDNESS	POINTS CHANGE	+10	MAX				
COMPRESSION SET	% (Z3)			ASTM D395 B			X
		25	MAX	22 HRS @ 158°F			
		75	MAX	22 HRS @ 257°F			
OZONE RESISTANCE	N/A	PASS	NO CRACKS	ASTM D1171 METHOD B 70 HRS @ 50 pphm @ 104°F			X
FLUID RESISTANCE	% CHANGE (Z4)	+/- 5	MAX	ASTM D471 (WATER) 70 HRS @ 212°F			X
LOW TEMPERATURE BRITTLENESS	N/A	PASS	NO CRACKS	ASTM D2137 CONDITIONED 3 MIN @ -40°F IN METHANOL			X
VOLUME RESISTIVITY	OHM-CM (Z5)	1.0×10^{12}	MIN	ASTM D257 (DRY)			X
VOLUME RESISTIVITY	OHM-CM (Z5)	1.0×10^{11}	MIN	ASTM D257 (CONDITIONED IN AN 18% NaCl SOLUTION FOR 168 HRS @ 25°C)			X
VOLUME RESISTIVITY - COMPRESSION	OHM-CM (Z5)	1.0×10^{12}	SEE NOTE 1	VOL RESISTIVITY ASTM D257 WHILE UNDER COMPRESSION PER ASTM D575 A (SEE NOTE 10)			X
MEGGAR TEST	OHM (Z6)	2G OHM	SEE NOTE 1	UPRR TEST (SEE NOTE 11)		X	
TEAR STRENGTH	lb/in (Z7)	150	MIN	ASTM D624 DIE "C"			X
RHEOMETER	N/A	NONE	SEE NOTE 1	ASTM D2084	X		
SPECIFIC GRAVITY	SG	NONE	SEE NOTE 1	ASTM D297	X		

NOTES:
1. TEST RESULTS FROM A REPRESENTATIVE SAMPLE ALONG WITH RECOMMENDED TOLERANCES ARE TO BE SUBMITTED TO UPRR FOR REVIEW AND APPROVAL.
2. A SAMPLE OF THE PROPOSED MATERIAL IS TO BE SUBMITTED TO UPRR FOR REVIEW AND APPROVAL.
3. MATERIAL SPECIFICATIONS APPLY TO BOTH GAGE SIDE AND FIELD SIDE FLANGEWAY MATERIAL.
4. ANY CHANGES IN MATERIAL COMPOSITION OF THE APPROVED SAMPLE WILL REQUIRE PRIOR APPROVAL FROM UPRR.
5. MANUFACTURER SHALL BE ISO 9001-2000 OR AAR M-1003 CERTIFIED.
6. ALL PERSONELL CONDUCTING MATERIAL TESTING SHALL BE AALA CERTIFIED FOR CONDUCTING MECHANICAL TESTING. ANY ALTERNATIVE LAB ACCREDITION WILL REQUIRE PRIOR APPROVAL.
7. MANUFACTURER SHALL MAINTAIN RECORDS FOR 10 YEARS AND RECORDS ARE TO BE OPEN TO REVIEW BY AUTHORIZED UPRR REPRESENTATIVES.
8. MANUFACTURER TO WARRANTY MATERIALS FOR 10 YRS.
9. EACH BATCH SHALL BE MARKED WITH A UNIQUE IDENTIFIER THAT WILL PERMIT TRACKING OF THE MATERIAL. EACH SAMPLE SHALL BE MARKED INDICATING IT IS "UPRR APPROVED".
10. REFER TO: VOLUME RESISTIVITY - COMPRESSION TESTS FOR ANNUAL MATERIAL CERTIFICATION 12-20-05
11. REFER TO: INSULATION RESISTANCE TESTING OF CONCRETE CROSSING PANEL FLANGEWAY FILLER - BOTH CENTER AND FIELD PANELS 12-19-05

UNION PACIFIC RAILROAD ENGINEERING STANDARDS

GENERAL SPECIFICATIONS FOR ROAD CROSSINGS WITH CONCRETE PANELS

UNION PACIFIC

ADOPTED: OCT. 24, 2013
REVISED:
FILE NO.: 0308

STD DWG
0308
PAGE 2 OF 2

STD DWG
0308
PAGE 2 OF 2

CONFORMED

Copyright © 2013 by Union Pacific Railroad

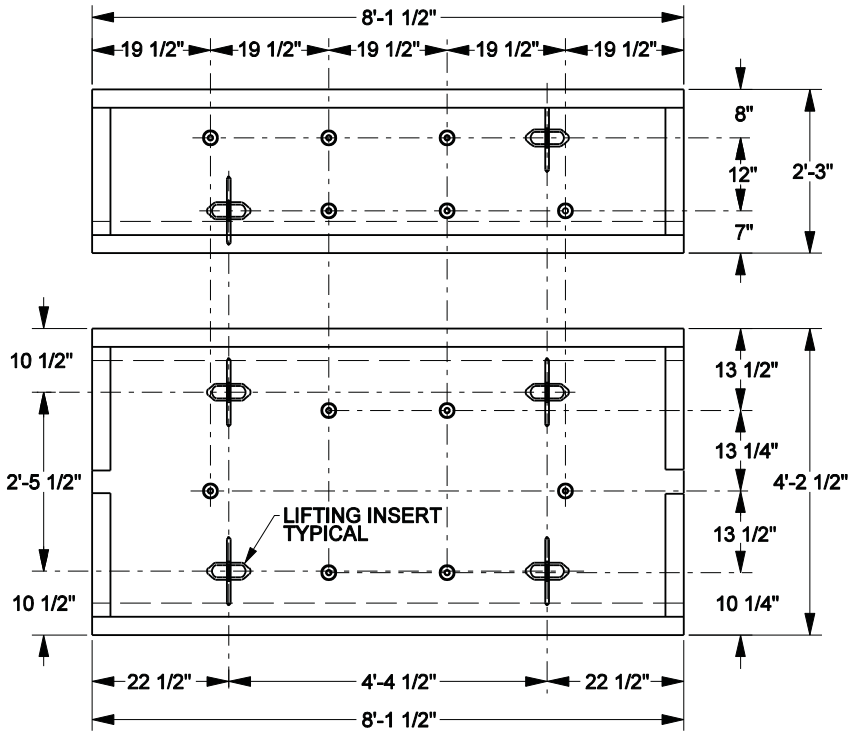

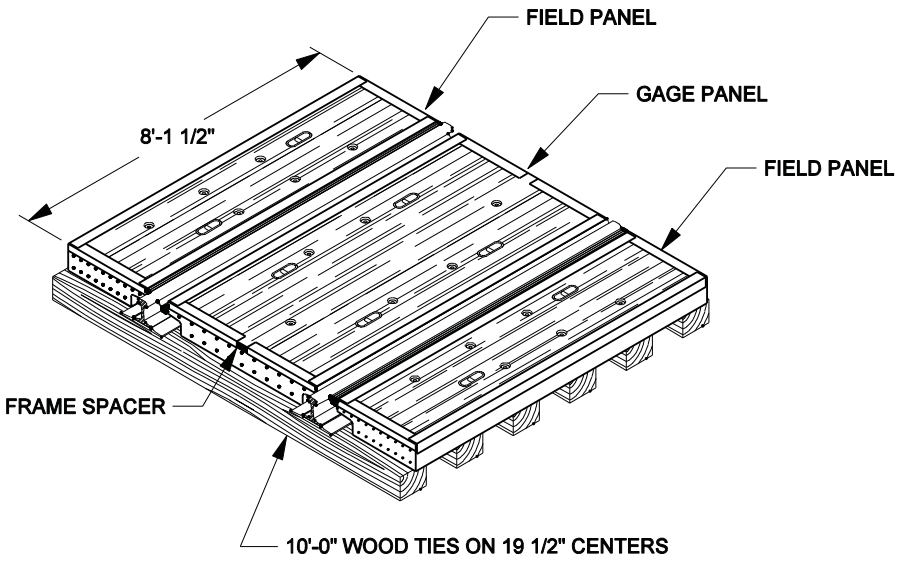

NOTES:
1/4" RUBBER INTERFACE PAD TO BE PLACED BETWEEN PANEL AND TIES FOR 141 LB. RAIL SECTION. PAD TO BE NAILED TO TIES,

CROSSING TYPE - 10W

RAIL SIZE	PANEL HEIGHT	GAGE PANEL WEIGHT	FIELD PANEL WEIGHT
115	7 1/8"	2850 LBS.	1550 LBS.
132-141	7 7/8"	3125 LBS.	1675 LBS.

BNSF RAILWAY

COMMON STANDARDS

LAYOUT FOR CONCRETE PANELS ON 10'-0" LONG WOOD TIES (10W)

ITEM NUMBERS				
141 LB. BNSF	133-141 LB. UPRR	132-136 LB. BNSF	115 LB. UPRR	115 LB. BNSF
054374616	540-1301	004935722	540-0202	004935706

FILE OWNER: UPRR | DATE: DEC. 6, 2010

REV. NO.: 2 | DWG NO: 200100

200100

CONFORMED

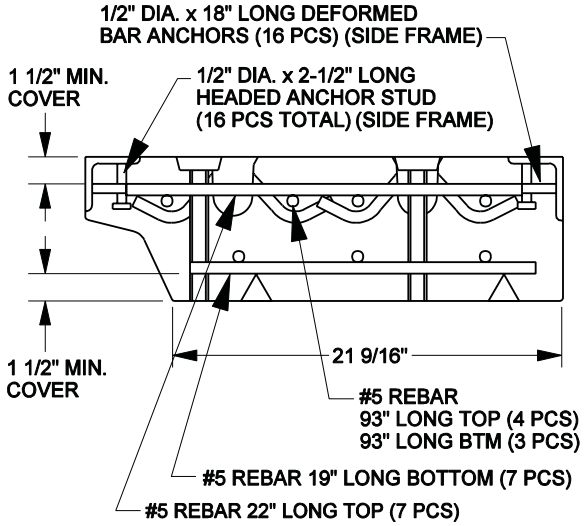

CROSS SECTION - FIELD PANEL

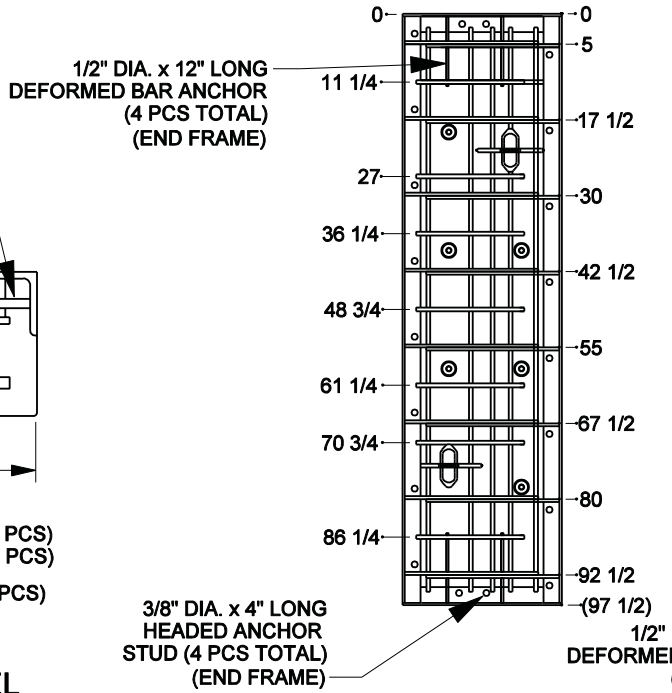

FIELD PANEL

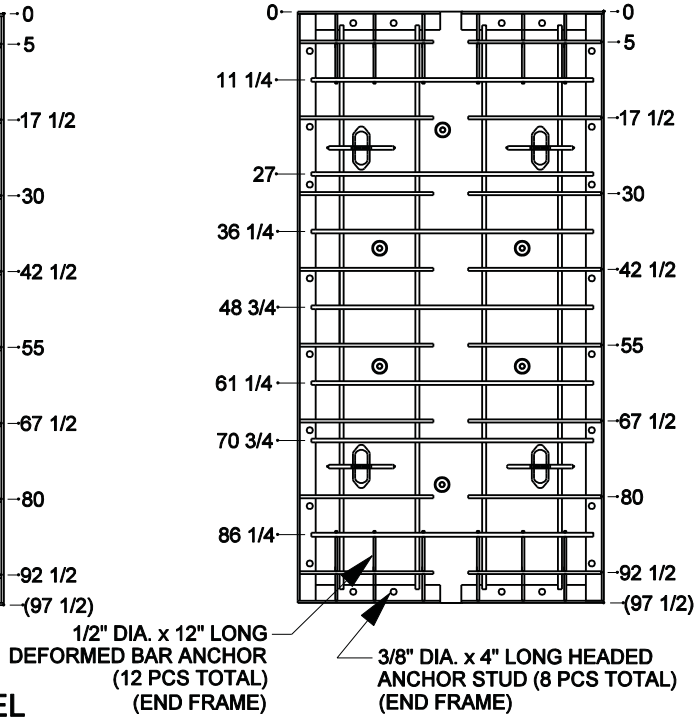

GAGE PANEL

NOTES:
CONCRETE COMPRESSIVE STRENGTH SHALL BE AS FOLLOWS:
@ 28DAYS = 6000 psi MINIMUM
@ SHIPMENT = 4000 psi MINIMUM
@ REMOVAL FROM FORMS = 2500 psi MINIMUM.

CROSSING TYPE - 10W

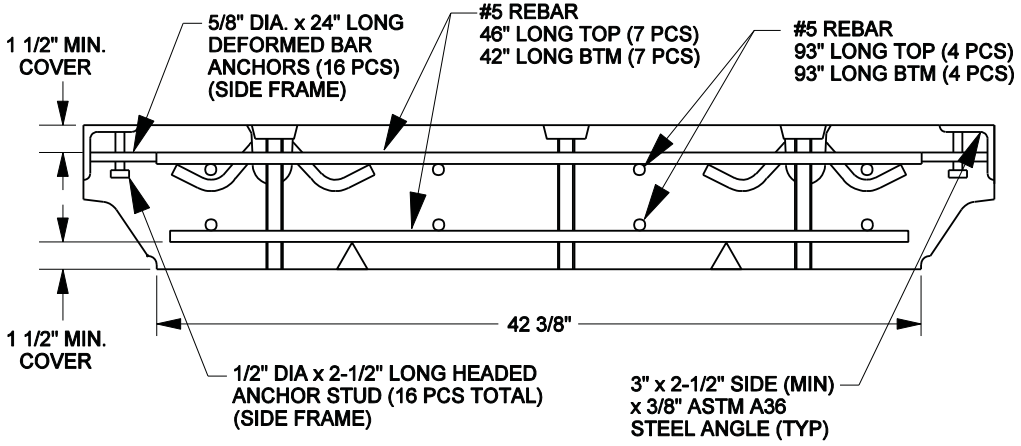

CROSS SECTION - GAGE PANEL

BNSF RAILWAY

UNION PACIFIC

COMMON STANDARDS

PRECAST CONCRETE PANELS FOR 10'-0" LONG WOOD TIES (10W)

UPRR VP ENGINEERING

BNSF VP ENGINEERING

FILE OWNER: UPRR	DATE: NOV. 6, 2009
REV. NO.: 2	DWG NO: 200102

200102

CONFORMED

200902

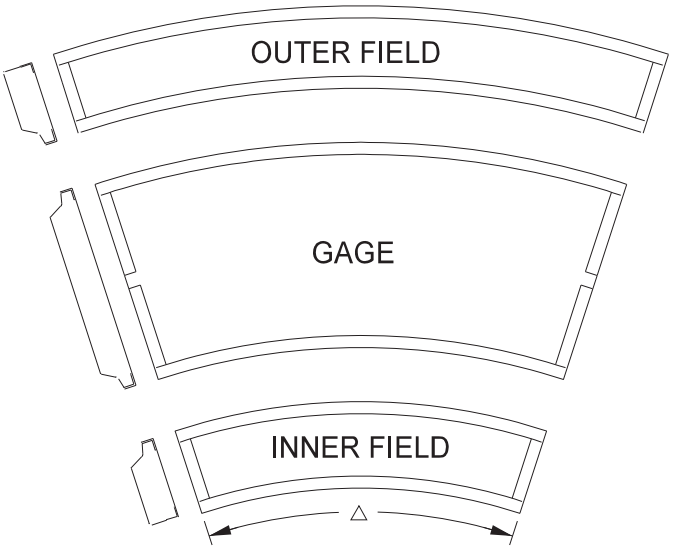

(SEE PANEL CURVATURE TABLES)

CURVATURE TABLE
(ON CONCRETE TIES)

DEGREE OF CURVE	RADIUS IN FEET	△	CURVE PANEL?
2° OR LESS	2865'	0.20°	NO
3°	1910'	0.30°	YES
4°	1433'	0.40°	YES
5°	1146'	0.50°	YES
6°	955'	0.60°	YES
7°	819'	0.70°	YES
8°	717'	0.80°	YES
9°	637'	0.90°	YES
10°	574'	1.00°	YES
11°	522'	1.10°	YES
12°	478'	1.20°	YES
13°	442'	1.30°	YES
14°	410'	1.40°	YES

CURVATURE TABLE
(ON WOOD TIES)

DEGREE OF CURVE	RADIUS IN FEET	△	CURVE PANEL?
3° OR LESS	1910'	0.24°	NO
4°	1433'	0.32°	YES
5°	1146'	0.40°	YES
6°	955'	0.48°	YES
7°	819'	0.56°	YES
8°	717'	0.66°	YES
9°	637'	0.74°	YES
10°	574'	0.82°	YES
11°	522'	0.90°	YES
12°	478'	0.98°	YES
13°	442'	1.06°	YES
14°	410'	1.14°	YES

NOTES:
A CURVED PANEL IS A PANEL THAT IS PIE SHAPED WITH A LONGER OUTER LENGTH THAN THE INNER LENGTH WITH TRUE RADIUSED OUTER AND INNER STEEL.

CURVED PANELS USE STANDARD REINFORCEMENT SIMILAR TO TANGENT PANEL STANDARD REINFORCEMENT.

LAG HOLES ON 10W AND 9W CROSSINGS MUST LINE UP WITH THE CENTERLINE OF TIES.

XING TYPE (RAIL WT.)	BNSF ITEM NO.	UPRR ITEM NO.
10W (115)	055590002	NON-STOCK
10W (133-141)	055590001	NON-STOCK
9W	NON-STOCK	NON-STOCK
10C	NON-STOCK	NON-STOCK
85C	NON-STOCK	NON-STOCK

COMMON STANDARDS

CURVED CONCRETE PANELS

FILE OWNER: UPRR	DATE: APRIL 24, 2001
REV. NO.: 0	DWG NO:200902

CONFORMED

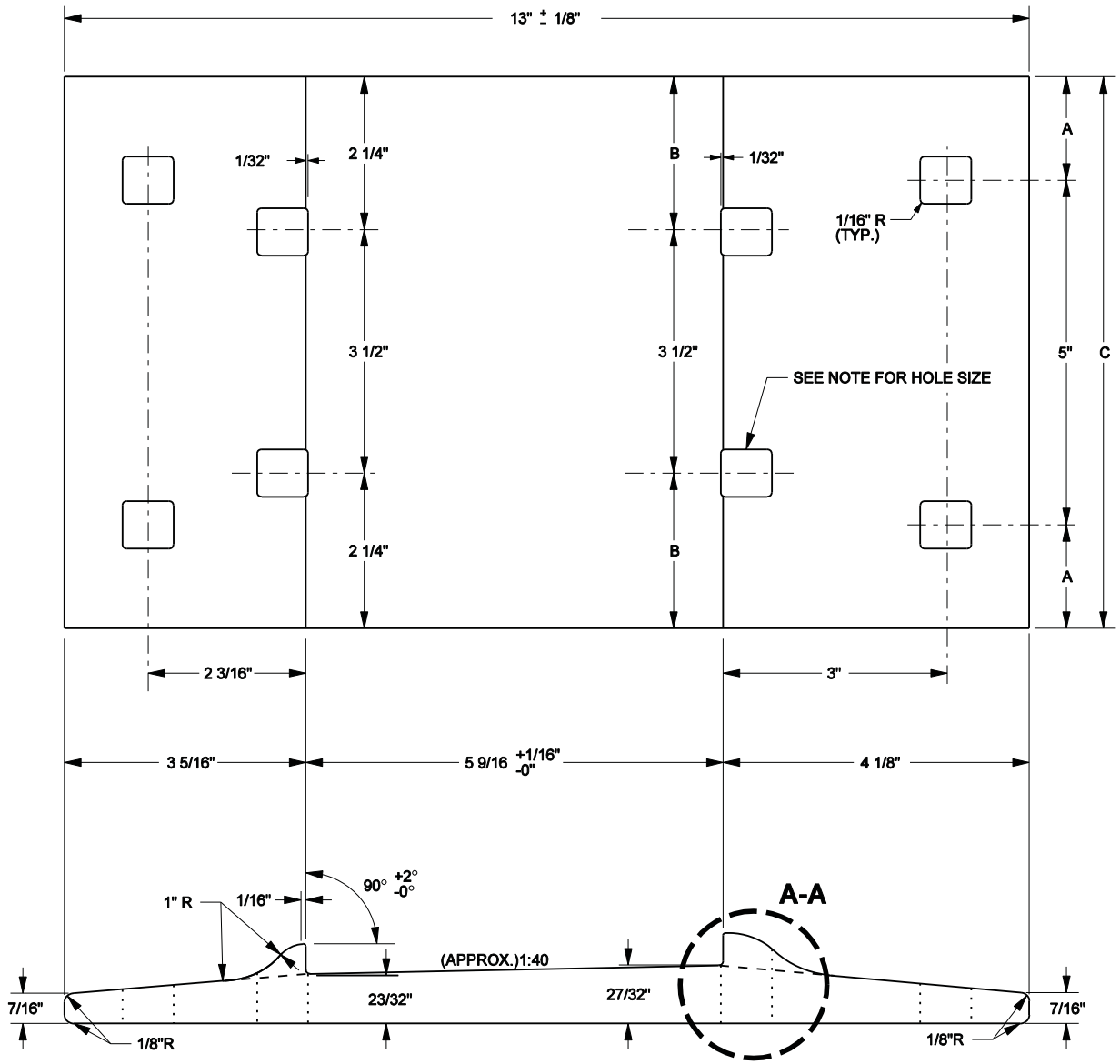

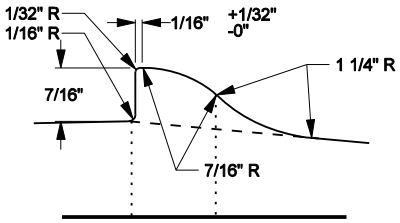

DETAIL A-A

NOTES:
1. ALL SPIKE HOLES: U.P. TO BE 11/16" SQUARE AND CNW TO BE BE 3/4" SQUARE.
2. SPECIFICATIONS AND WORKMANSHIP TO BE IN ACCORDANCE WITH CURRENT A.R.E.A. MANUAL REQUIREMENTS FOR HOT-WORKED, HIGH CARBON STEEL TIE PLATES.
3. ROLL MANUFACTURER'S IDENTITY, U.P. RAIL SECTION AND YEAR ROLLED ON TOP OF FIELD SIDE OF TIE PLATE.
4. REF PREVIOUS U.P. STD DWG PAGE 2007 AND PREVIOUS M.P. STD DWG NO.412.2A

	A	B	C	ITEM NO.
M.P.	1 1/2"	2 1/4"	8"	554-3779
CNW	1 3/8"	2 1/8"	7 3/4"	554-2015

UNION PACIFIC RAILROAD ENGINEERING STANDARDS

DOUBLE SHOULDER TIE PLATE FOR 5 1/2" BASE RAIL

APPROVED: VP ENGINEERING
ADOPTED: SEP. 23, 1949
REVISED: JAN. 8, 2010
FILE NO.: 0440B

STD DWG 0440B

STD DWG 0440B

Copyright © 2010 by Union Pacific Railroad

CONFORMED

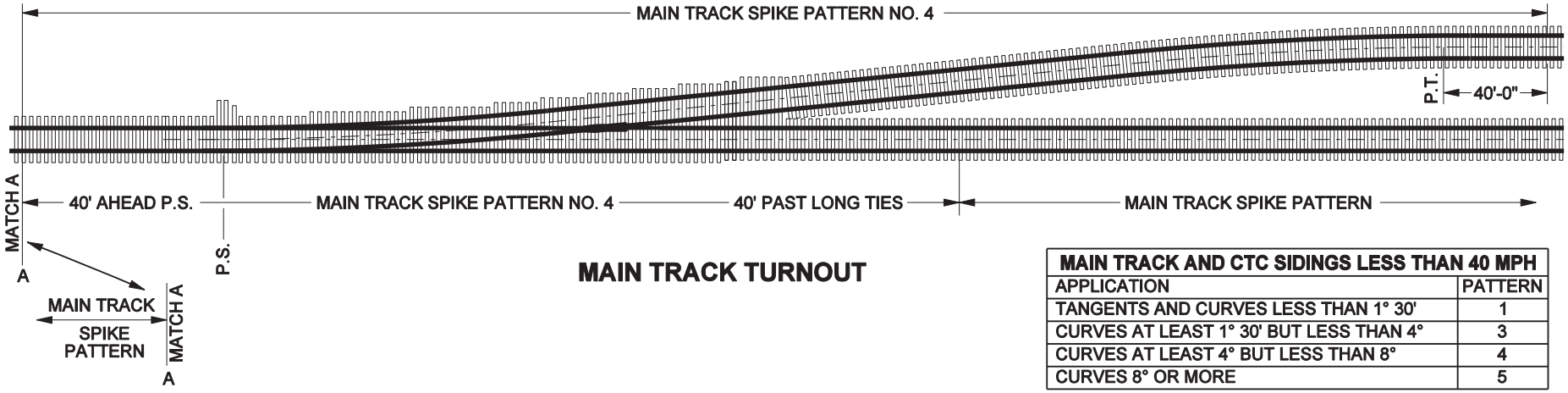

MAIN TRACK TURNOUT

MAIN TRACK AND CTC SIDINGS LESS THAN 40 MPH	
APPLICATION	PATTERN
TANGENTS AND CURVES LESS THAN 1° 30'	1
CURVES AT LEAST 1° 30' BUT LESS THAN 4°	3
CURVES AT LEAST 4° BUT LESS THAN 8°	4
CURVES 8° OR MORE	5

MAIN TRACK AND CTC SIDINGS 40 MPH OR MORE	
APPLICATION	PATTERN
TANGENTS AND CURVES LESS THAN 30'	2
CURVES AT LEAST 30' BUT LESS THAN 1° 30'	3
CURVES AT LEAST 1° 30' BUT LESS THAN 4°	4
CURVES 4° OR MORE	5

YARD AND INDUSTRY TRACKS	
APPLICATION	PATTERN
TANGENTS AND CURVES LESS THAN 4°	1
CURVES AT LEAST 4° BUT LESS THAN 8°	3
CURVES 8° OR MORE	4

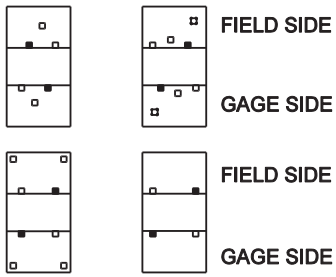

SPIKING PATTERN NO. 1

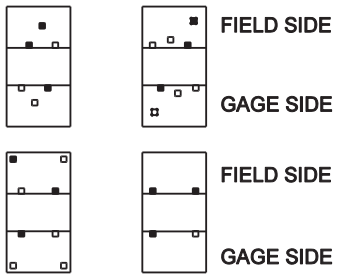

SPIKING PATTERN NO. 2

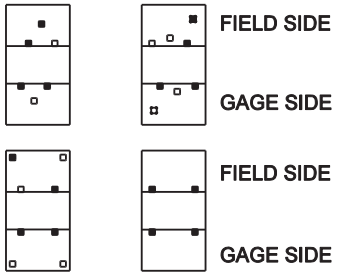

SPIKING PATTERN NO. 3

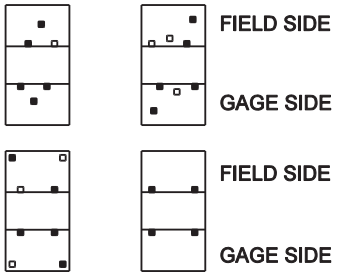

SPIKING PATTERN NO. 4

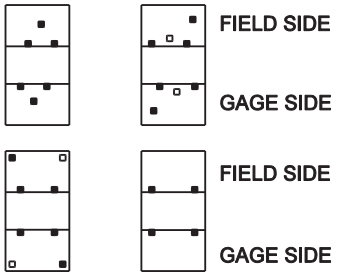

SPIKING PATTERN NO. 5

■ - DENOTES SPIKE FILLED HOLE

NOTES:
1. THE SPIKE PATTERNS SHOWN ARE FOR MAIN TRACKS, BRANCH LINE TRACKS, HEAVY TONNAGE SPURS, AND C.T.C. SIDINGS WITH 13" AND LONGER PLATES.
2. ANY SPIKING PATTERN OTHER THAN WHAT IS SHOWN ON THIS DRAWING ARE TO BE APPROVED BY THE CHIEF ENGINEER.

UNION PACIFIC RAILROAD ENGINEERING STANDARDS

SPIKING PATTERN

UNION PACIFIC

ADOPTED: DEC. 31, 1996
REVISED: JUL. 17, 2007
FILE NO.: 0453D

STD DWG
0453D

STD DWG
0453D

Copyright © 2005 by Union Pacific Railroad

CONFORMED

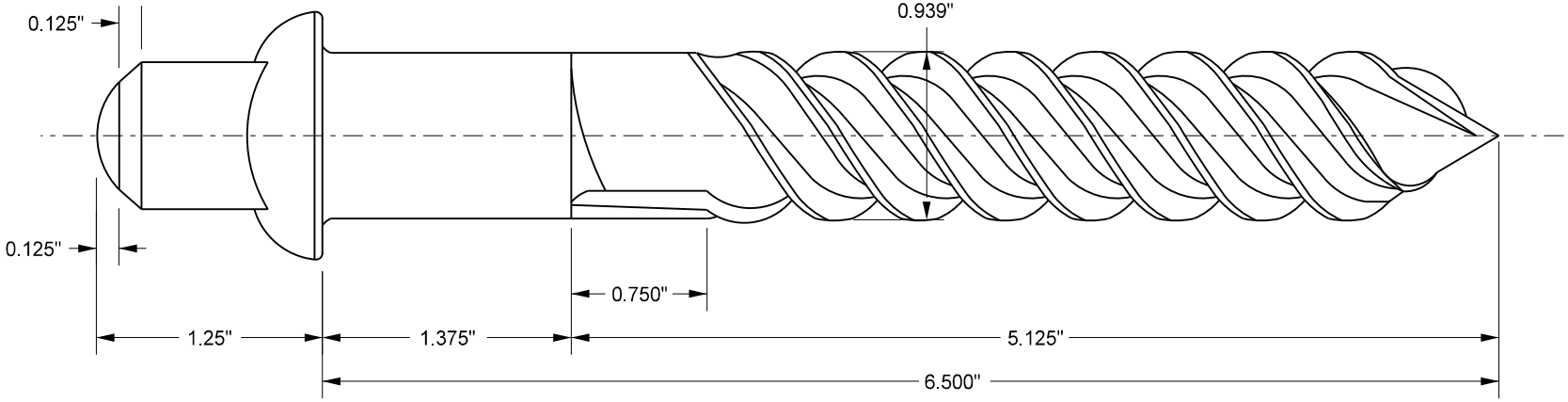

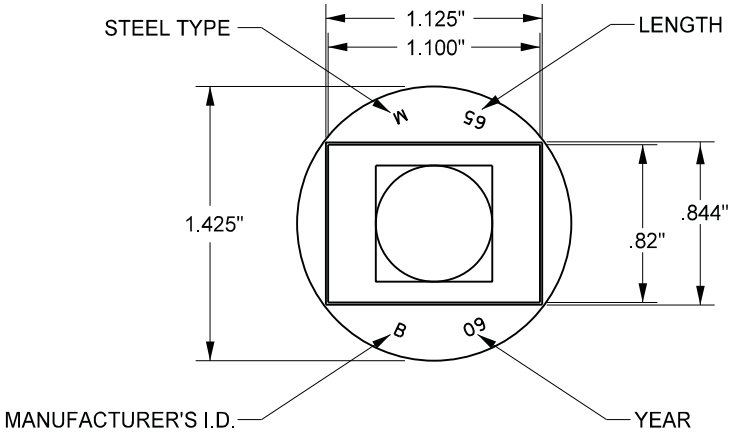

TOP VIEW OF HEAD

NOTES:
1. EVERGRIP LAG SCREW REQUIRES A 3/4" PRE-DRILL.
2. LAGS MAY SHALL BE SCREWED IN USING A HYDRAULIC IMPACT OR PRODUCTION LAGGER.
3. EVERGRIPS WILL NOT BE REMOVED USING A SPIKE PULLER. LAGS MUST BE REMOVED USING A IMPACT OR DE-LAGGER.

UNION PACIFIC RAILROAD ENGINEERING STANDARDS

EVERGRIP LAG SCREW

DESCRIPTION	ITEM NO.
EVERGRIP TIMBER LAG SCREW	503-8623
DRILL BIT 3/4"	414-0500
SOCKET FOR 1" DRIVE IMPACT WRENCH	570-3747
SOCKET FOR 3/4" DRIVE GE SMART	570-3745

CONFORMED

UNION PACIFIC

ADOPTED: APR. 13, 2011
REVISED: JAN. 18, 2013
FILE NO.: 0454A

STD DWG
0454A

STD DWG
0454A

Copyright © 2013 by Union Pacific Railroad

CONTINUOUS WELDED RAIL (NEW INSTALLATION):

1) BOX ANCHOR EVERY OTHER TIE (USE PATTERN #1). ANCHORING NOT REQUIRED ON TIES WITH ELASTIC FASTENERS.

2) CHIEF ENGINEER MAY AUTHORIZE ADDITIONAL ANCHORS TO BE INSTALLED ON CONCRETE OR WOOD TIES WHERE INCREASED RAIL RESTRAINT IS DESIRED. SUCH LOCATIONS MAY BE: SUBDIVISIONS EXPECTED TO HANDLE 95MGT OR MORE ANNUALLY, OPEN JOINTS IN CWR TERRITORY, HEAVY TRAIN BRAKING GRADES, ETC.

JOINTED RAIL (NEW INSTALLATION):

BOX ANCHOR EVERY OTHER TIE (USE PATTERN #1)

JOINTED RAIL TURNOUTS (NEW INSTALLATION):

1) BOX ANCHOR EVERY TIE (USE PATTERN #2).

2) BOX ANCHOR 48 TIES AHEAD OF POINT OF SWITCH AND BEHIND LAST TURNOUT TIE (USE PATTERN #2).

TURNOUTS (NEW INSTALLATION):

1) BOX ANCHOR EVERY TIE (USE PATTERN #2).

2) BOX ANCHOR EVERY TIE 120 TIES AHEAD OF POINT OF SWITCH AND BEHIND LAST TURNOUT TIE (USE PATTERN #2).

OPEN DECK BRIDGES:

BOX ANCHOR EVERY TIE120 TIES AWAY IN BOTH DIRECTIONS ON CONCRETE AND WOOD TIES (USE PATTERN #2).

HOT BOX / DRAGGING EQUIPMENT DETECTORS:

BOX ANCHOR 120 TIES AWAY IN BOTH DIRECTIONS ON WOOD TIES ONLY (USE PATTERN #2). ANCHORING NOT REQUIRED ON TIES WITH ELASTIC FASTENERS.

INSULATED JOINTS

BOX ANCHOR EVERY TIE 120 TIES AWAY FROM THE INSULATED JOINT IN BOTH DIRECTIONS ON WOOD TIES ONLY (USE PATTERN #2). ANCHORING NOT REQUIRED ON TIES WITH ELASTIC FASTENERS.

CROSSING FROGS

BOX ANCHOR EVERY TIE 120 TIES AWAY FROM THE CROSSING FROG IN ALL DIRECTIONS ON CONCRETE AND WOOD TIES (USE PATTERN #2).

ROAD CROSSINGS

BOX ANCHOR EVERY TIE THROUGH THE CROSSING LIMITS ON WOOD TIES ONLY (USE PATTERN #2). ANCHORING NOT REQUIRED ON TIES WITH ELASTIC FASTENERS.

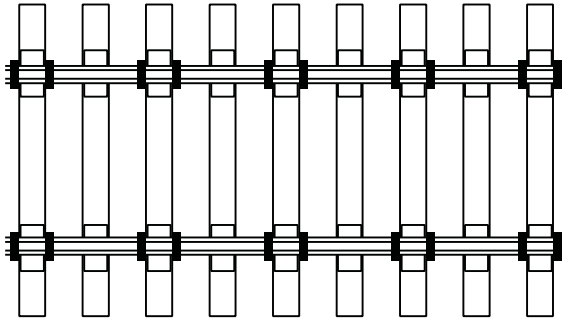

ANCHOR PATTERN #1

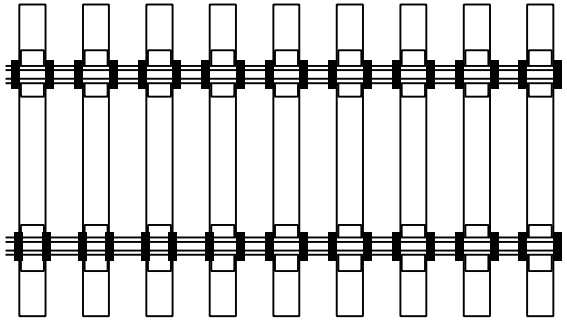

ANCHOR PATTERN #2

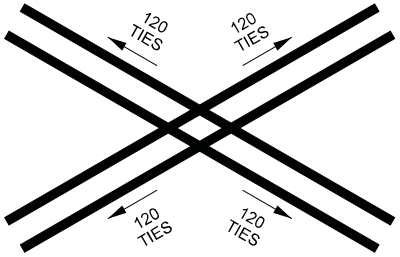

CROSSING FROGS

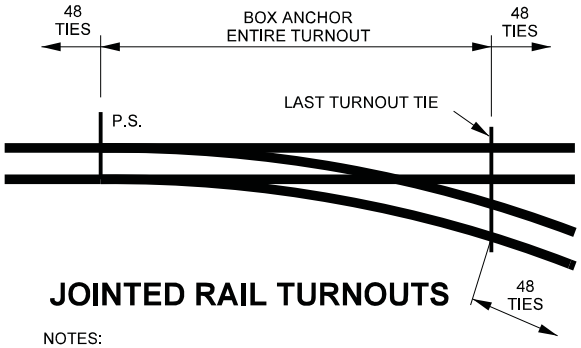

JOINTED RAIL TURNOUTS

NOTES:

1. ANCHOR PATTERN #1 WILL BE USED FOR ALL RAIL RELAYS. EXISTING ANCHOR PATTERNS MAY REMAIN UNTIL A RAIL RELAY IS DONE.
2. WHERE ELASTIC FASTENERS FAIL TO PROPERLY RESTRAIN THE RAIL FROM MOVING LONGITUDINALLY, INSTALL ADDITIONAL ANCHORS AS REQUIRED.
3. WHERE PRACTICAL, ANCHOR TO BE INSTALLED FROM GAGE SIDE OF RAIL.
4. USE AN ANCHOR WITH AN ISOLATOR ON CONCRETE TIE APPLICATIONS (ITEM NO. 550-1652).
5. IN A CURVE, IF THERE ARE ELASTIC FASTENERS ON ONE RAIL, BUT NOT BOTH, USE ANCHOR PATTERN #1 ON THE RAIL WITHOUT ELASTIC FASTENERS.

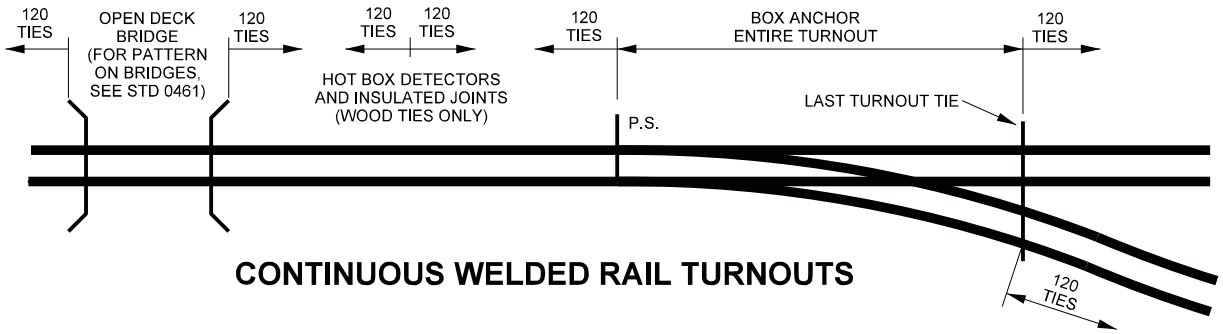

CONTINUOUS WELDED RAIL TURNOUTS

UNION PACIFIC RAILROAD ENGINEERING STANDARDS

RAIL ANCHOR PATTERNS FOR NEW RAIL INSTALLATIONS

ADOPTED: DEC. 31, 1996
REVISED: JAN. 17, 2014
FILE NO.: 0460G

STD DWG
0460G

STD DWG
0460G

CONFORMED

Copyright © 2014 by Union Pacific Railroad

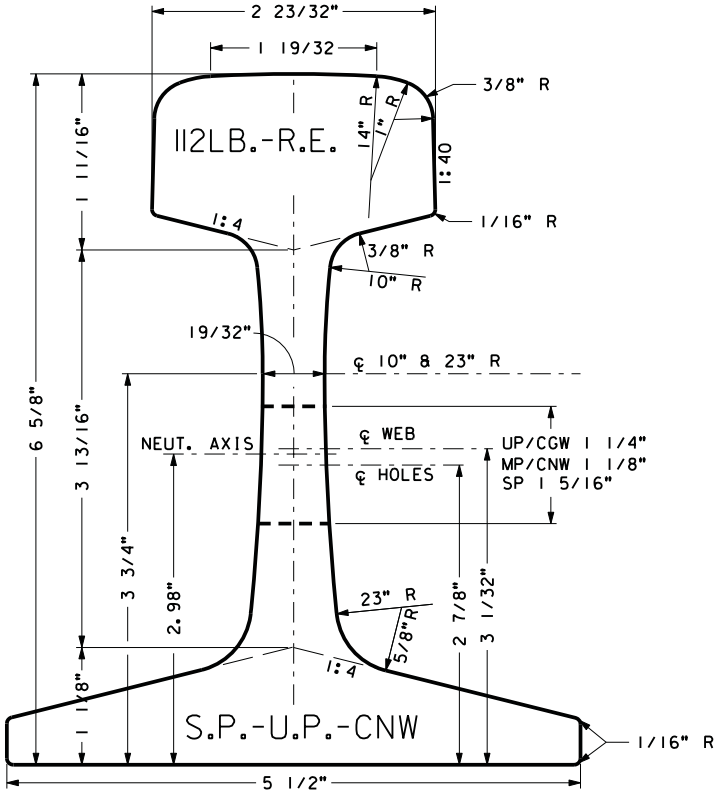

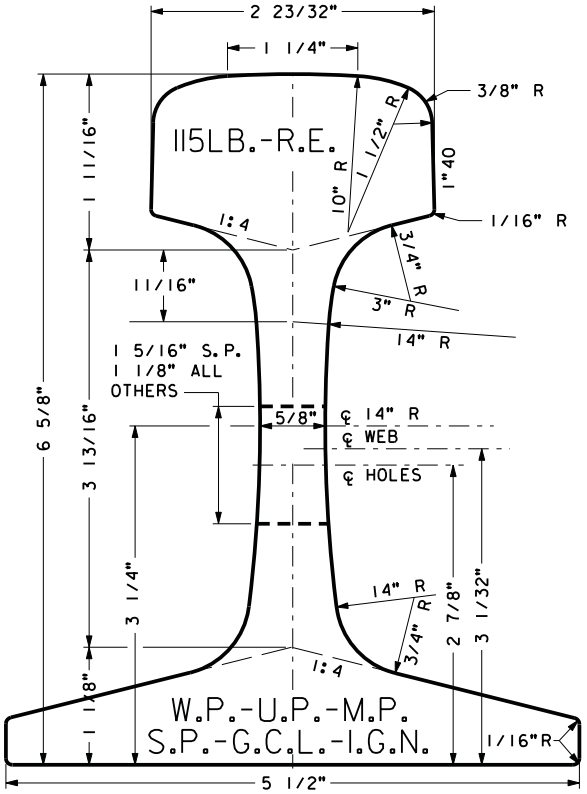

U. P. { *2 15/16 -6 1/2 | *2 15/16 -6 1/2 -6 1/2
**6 1/2 -6-6 1/2 | **6 1/2 -6 1/2 -6-6 1/2 -6 1/2

CNW S. P. { *2 1/2 -6 1/2 -6 1/2

W. P. - S. P. { *2 1/2 -6 1/2 -6 1/2 | *2 1/2 -6 1/2
**6 1/2 -6 1/2 -5 1/8 -6 1/2 -6 1/2, **6 1/2 -5 1/8 -6 1/2

CGW M&ST. L { *3 1/2 -6

CNW ALL OTHERS { *3 1/2 -6-6
**6-6-7 1/8 -6-6

NOTES:
* INDICATES RAIL END DRILLING.

** INDICATES BAR PUNCHING.

REF PREVIOUS U. P. STD DWGS PAGES 1003-1005.

112 LB. IS USED FOR MAINTENANCE ONLY

UNION PACIFIC RAILROAD
ENGINEERING STANDARDS

112 LB. AND 115 LB. RAIL SECTIONS

UNION PACIFIC

ADOPTED: MAY 26, 1988
REVISED: MARCH 1, 1998
FILE NO.: 0720

STD DWG
0720A

Copyright © 1997 by Union Pacific Railroad

STD DWG
0720A

CONFORMED

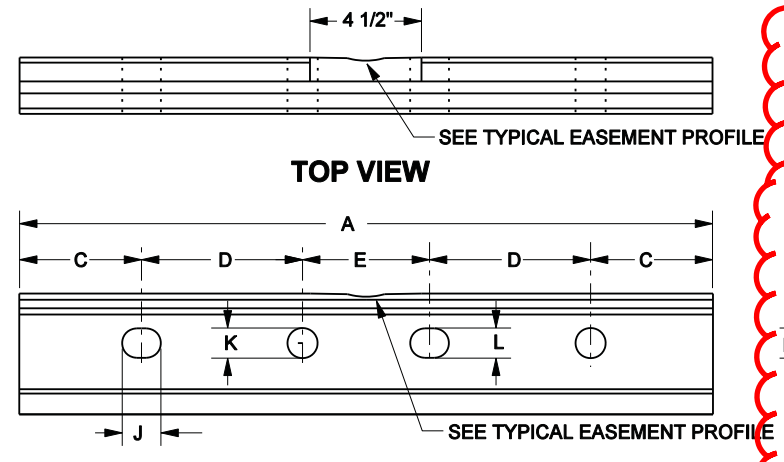

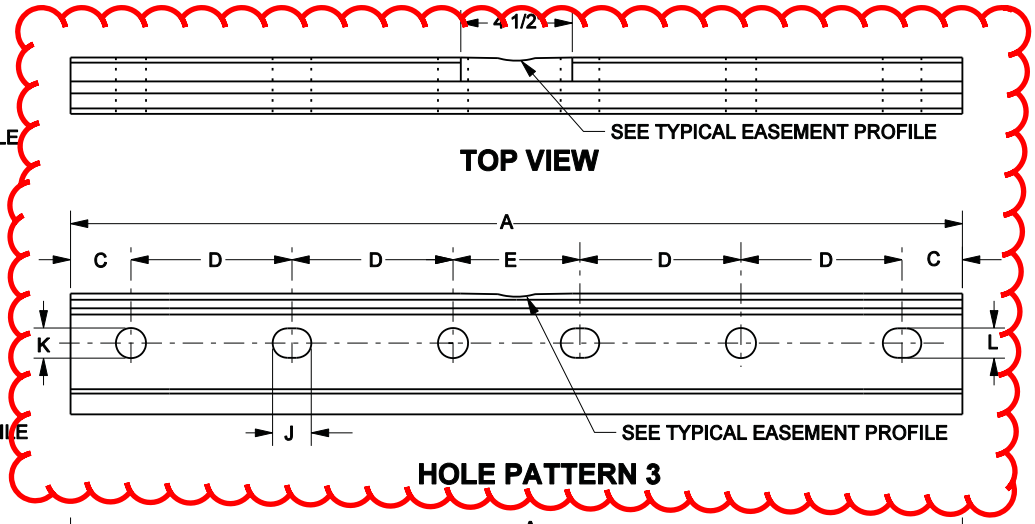

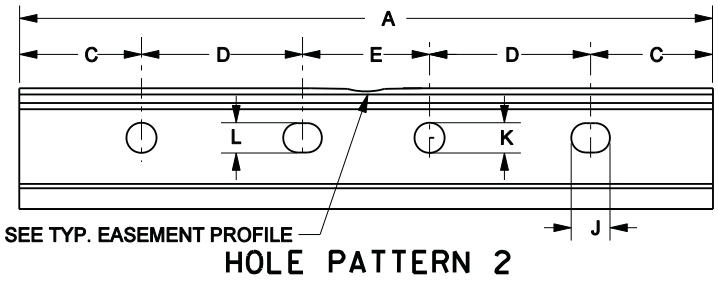

ELEVATION OF 24" AND 28" BAR

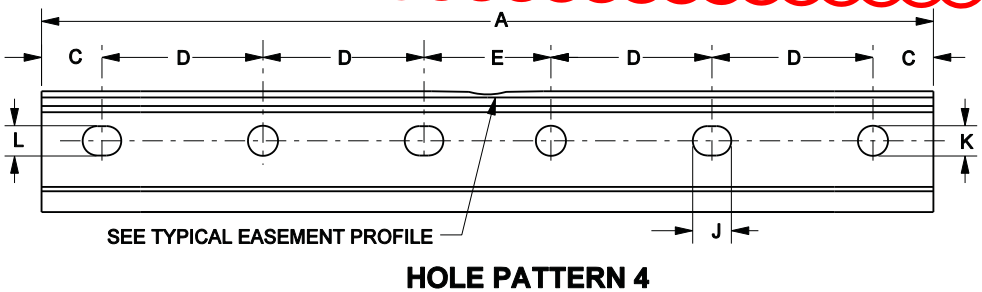

ELEVATION OF 36" BAR

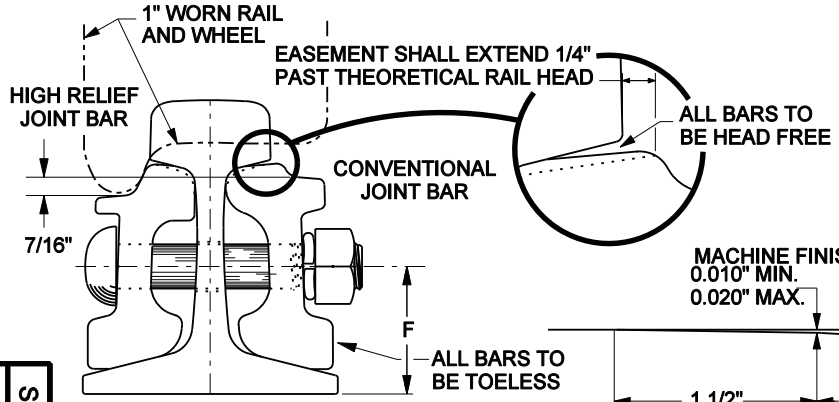

RAIL AND JOINT

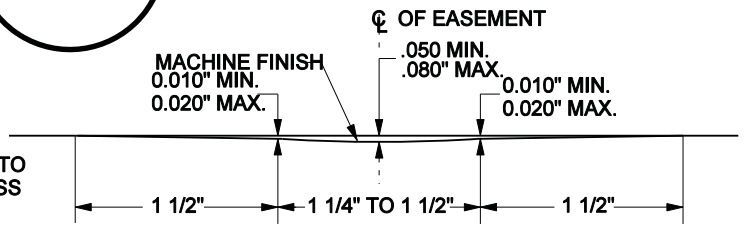

TYPICAL EASEMENT PROFILE

NOTE:
1. SEE PAGE 2 FOR THE REST OF THIS DWG.

UNION PACIFIC RAILROAD ENGINEERING STANDARDS

MISCELLANEOUS JOINT BARS

ADOPTED: MARCH 1, 1998
REVISED: MAY 18, 2005
FILE NO.: 0904F

STD DWG
0904F
PAGE 1 OF 2

STD DWG
0904F
PAGE 1 OF 2

Copyright © 2005 by Union Pacific Railroad

CONFORMED

STANDARD JOINT BAR	ITEM NO.	HOLE PATTERN	A	C	D	E	F	G	H	J	K	L
110 LB. 24" S.P. PUNCH	552-7300	2	24"	3 3/4"	5 1/2"	5 1/2"	2 5/8"	2 11/16"	1 1/4"	1 1/2"	1 5/32"	1 7/16"
112 LB. 24" U.P. PUNCH	552-7354	1	24"	2 15/16"	6 1/2"	5 1/8"	2 7/8"	2 1/2"	1 1/8"	1 9/16"	1 3/16"	1 3/16"
112 LB. 36" U.P. PUNCH	552-7385	4	36"	3"	6 1/2"	6"	2 7/8"	2 15/16"	1 1/8"	1 9/16"	1 1/8"	1 1/8"
113 LB. 28" S.P. PUNCH	552-7400	2	28"	4 15/16"	6 1/2"	5 1/8"	2 7/8"	2 1/2"	1 1/4"	1 9/16"	1 7/32"	1 3/16"
115 LB. 24" DRGW PUNCH	552-7408	1	24"	3"	6"	6"	2 7/8"	2 15/16"	1 1/8"	1 9/16"	1 3/16"	1 3/16"
115 LB. 28" S.P. PUNCH	552-7430	2	28"	4 15/16"	6 1/2"	5 1/8"	2 7/8"	2 1/2"	1 1/4"	1 9/16"	1 7/32"	1 3/16"
115, 119 LB. 36" U.P. PUNCH	552-7447	3	36"	2 7/16"	6"	7 1/8"	2 7/8"	3 1/2"	1 1/8"	1 13/32"	1 1/16"	1 1/16"
119 LB. 28" S.P. PUNCH	552-7500	2	28"	4 15/16"	6 1/2"	5 1/8"	2 7/8"	2 1/2"	1 1/4"	1 1/2"	1 7/32"	1 3/16"
119 LB. 36" DRGW PUNCH	552-7900	3	36"	3"	6"	6"	2 7/8"	2 15/16"	1 1/8"	1 9/16"	1 3/16"	1 9/16"
131 LB. 24" U.P. PUNCH	552-7570	1	24"	2 15/16"	6 1/2"	5 1/8"	3 3/32"	2 1/2"	1 1/8"	1 9/16"	1 3/16"	1 3/16"
131 LB. 36" U.P. PUNCH	552-7601	4	36"	2 15/16"	6 1/2"	6"	3 3/32"	2 15/16"	1 3/16"	1 1/2"	1 1/8"	1 1/8"
132 LB. 28" S.P. PUNCH	552-7615	2	28"	4 15/16"	6 1/2"	5 1/8"	3 3/32"	2 1/2"	1 5/16"	1 9/16"	1 7/32"	1 3/16"
132 LB. 36" U.P. PUNCH	552-7662	3	36"	2 7/16"	6"	7 1/8"	3 3/32"	3 1/2"	1 1/8"	1 13/32"	1 1/16"	1 13/32"
133 LB. 36" U.P. PUNCH	552-7693	4	36"	2 7/16"	6"	7 1/8"	3"	3 1/2"	1 1/8"	1 1/2"	1 1/8"	1 1/8"
136 LB. 36" U.P. PUNCH	552-7662	3	36"	2 7/16"	6"	7 1/8"	3 3/32"	3 1/2"	1 1/8"	1 13/32"	1 1/16"	1 1/16"
136 LB. 28" S.P. PUNCH	552-7700	2	28"	4 15/16"	6 1/2"	5 1/8"	3 3/32"	2 1/2"	1 3/16"	1 9/16"	1 7/32"	1 3/16"
136 LB. 36" S.P. PUNCH	552-9175	3	36"	2 7/16"	6 1/2"	5 1/8"	3 3/32"	2 1/2"	1 3/16"	1 9/16"	1 7/32"	1 3/16"
136 LB. 36" DRGW PUNCH	552-7631	4	36"	3"	6"	6"	3 3/32"	2 15/16"	1 1/8"	1 9/16"	1 3/16"	1 3/16"
132-141 LB. 36" UP PUNCH	552-7650	3	36"	2 7/16"	6"	7 1/8"	3 9/32"	3 1/2"	1 1/4"	1 1/2"	1 3/16"	1 3/16"

HIGH RELIEF JOINT BAR	ITEM NO.	HOLE PATTERN	A	C	D	E	F	G	H	J	K	L
115, 119 LB. 36" U.P. PUNCH	552-7479	3	36"	2 7/16"	6"	7 1/8"	2 7/8"	3 1/2"	1 1/8"	1 13/32"	1 1/16"	1 1/16"
133 LB. 36" U.P. PUNCH	552-7694	4	36"	2 7/16"	6"	7 1/8"	3"	3 1/2"	1 1/8"	1 1/2"	1 1/8"	1 1/8"
132-141 LB. 36" UP PUNCH	552-7680	3	36"	2 7/16"	6"	7 1/8"	3 9/32"	3 1/2"	1 1/4"	1 1/2"	1 3/16"	1 3/16"

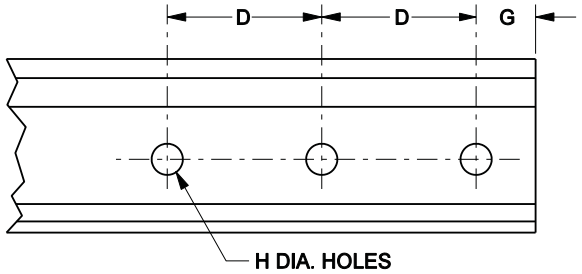

RAIL DRILLING

NOTES:
1. STAGGERED JOINTS: RAIL MUST BE LAID WITH STAGGERED JOINTS IN MAIN TRACKS, EXCEPT WHERE BALANCING THE JOINTS FOR SWITCH LEADS, ROAD CROSSINGS, BRIDGE ENDS,AND SIGNAL CIRCUITS, AND IN SECONDARY TRACKS EXCEPT WHERE USE OF PREFABRICATED TRACK PANELS IS AUTHORIZED.
2. RAIL JOINT LOCATION: WHEN LAYING RAIL, JOINTS MUST NOT BE LOCATED IN ROAD CROSSINGS, BRIDGE DECKS, OR ON THE ENDS OF BRIDGES.
3. FOR RAIL DETAILS, SEE STD DWGS. (700 SERIES) FOR HARDWARE, SEE STD DWG 0950. SEE PAGE 1 FOR THE REST OF THIS DWG.

UNION PACIFIC RAILROAD ENGINEERING STANDARDS

MISCELLANEOUS JOINT BARS

ADOPTED: MARCH 1, 1998
REVISED: MAY 18, 2005
FILE NO.: 0904F

STD DWG 0904F PAGE 2 OF 2

STD DWG 0904F PAGE 2 OF 2

Copyright © 2005 by Union Pacific Railroad

CONFORMED

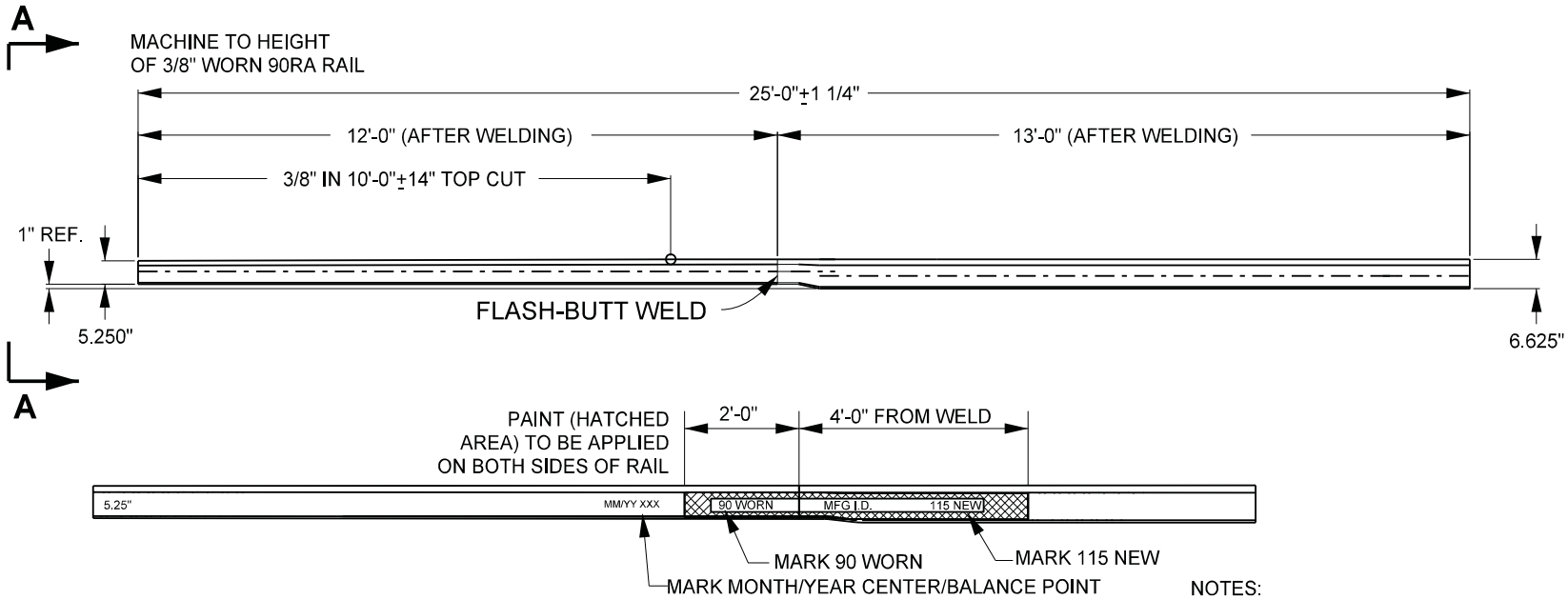

PAINT DETAIL

WHITE STENCIL, 2" BLOCK LETTERING
BOTH SIDES, LOCATION AS SHOWN.

NOTES:

1. PAINT WEB OF RAIL AS SHOWN IN PAINT DETAIL, SOLID WHITE ON BOTH SIDES. USING 2" BLOCK STENCIL AND BLACK PAINT, MARK THE APPROPRIATE RAIL TRANSITIONS, AT EACH END OF THE WHITE PAINTING. ADDITIONALY, ON ONE SIDE ONLY, PERMANENTLY AFFIX MANUFACTURERS I.D. TAG SHOWING APPROPRIATE DATA, INCLUDING MONTH AND YEAR IN PAINTED AREA.

2. AFTER FLASH BUTT WELD, 36" STRAIGHT EDGE CENTERED ON WELD MUST:
   a) ALONG TOP OF RAIL HAVE NO DIP AND NO CROWN GREATER THAN 0.060".
   b) ALONG BASE OF RAIL HAVE NO HORIZONTAL BOW GREATER THAN 0.060".

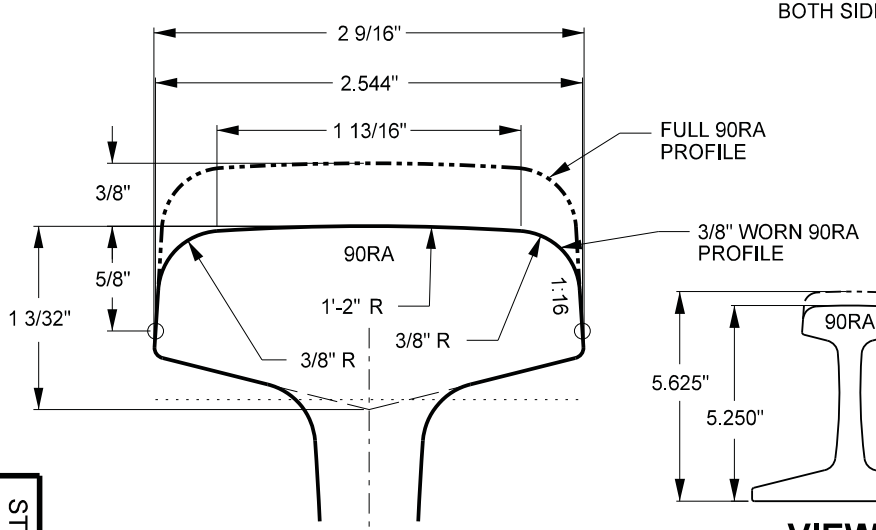

TOP RADII DETAIL

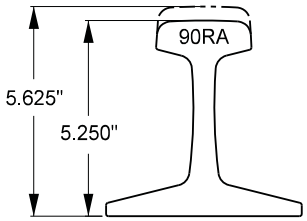

VIEW A

3/8" DEEP HEAD CUT
TO SIMULATE 3/8" WEAR

DESCRIPTION	ITEM NO.
LH RAIL	552-2219
RH RAIL	552-2220

UNION PACIFIC RAILROAD ENGINEERING STANDARDS

COMPROMISE TRANSITION RAIL 115 LB. TO 90 LB. WORN

UNION PACIFIC

APPROVED: VP ENGINEERING
ADOPTED: JULY 16, 2012
REVISED:
FILE NO.: 0942

STD DWG
0942

STD DWG
0942

CONFORMED

Copyright © 2012 by Union Pacific Railroad

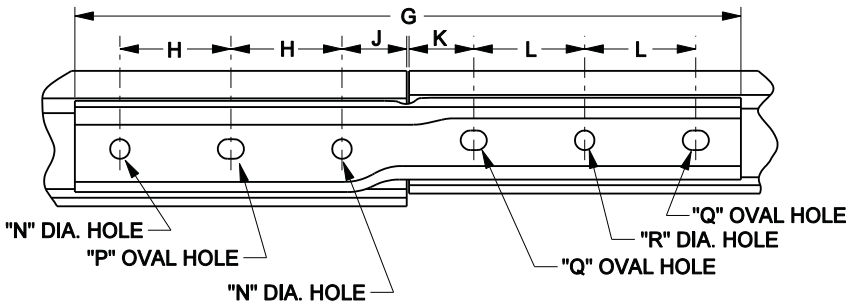

6-HOLE OUT BAR DETAIL

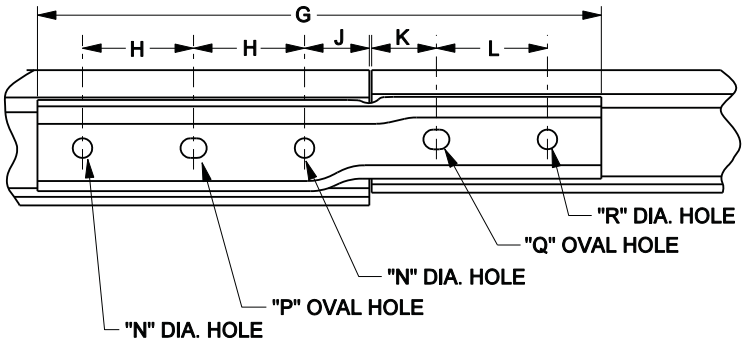

5-HOLE OUT BAR DETAIL

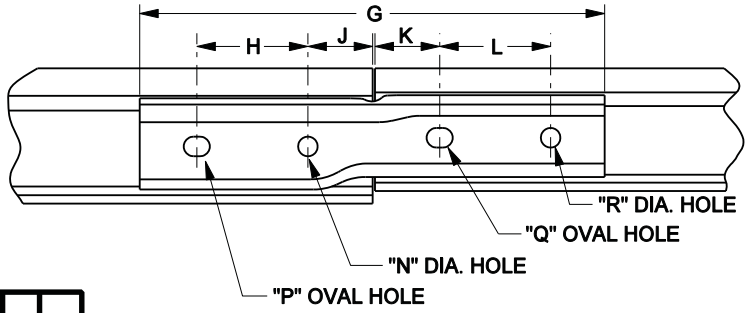

4-HOLE OUT BAR DETAIL

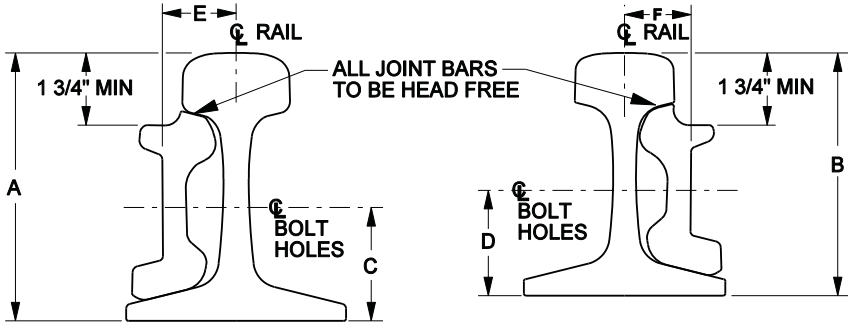

LARGER RAIL

SMALLER RAIL

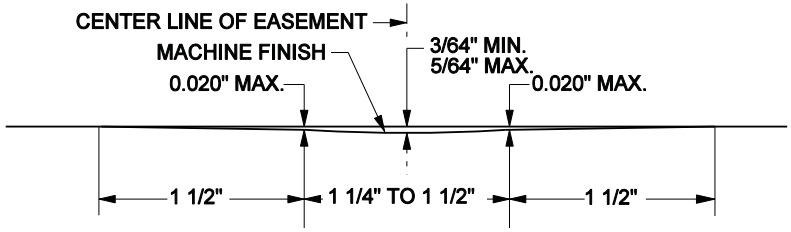

TYPICAL EASEMENT PROFILE

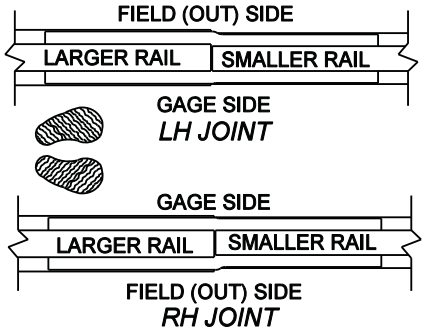

HANDED JOINTS

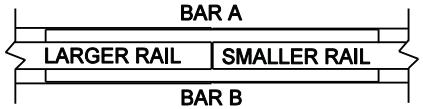

NON-HANDED JOINTS

NOTES:

1. AT PERMANENT CONNECTIONS OF DIFFERENT RAIL SECTIONS, COMPROMISE JOINTS OR COMPROMISE WELDS SHALL BE INSTALLED IN ACCORDANCE WITH CHIEF ENGINEER'S INSTRUCTIONS AND WHERE PRACTICABLE, THEY SHALL NOT BE LOCATED IN MAIN TRACK CURVE OR OPEN DECK BRIDGES, OR IN TURNOUTS.
2. STD DRAWINGS SHOULD BE REFERENCED FOR MANUFACTURING PURPOSE AND TO IDENTIFY THE ROUND AND OVAL HOLE PATTERNS.
3. SEE PAGE 2 FOR DIMENSION CHART & DETAILS FOR TRACK BOLTS, SEE STD DWG 0950

UNION PACIFIC RAILROAD ENGINEERING STANDARDS

COMPROMISE JOINTS

ADOPTED: DEC. 31, 1996
REVISED: JUNE 9, 2004
FILE NO.: 0948B

STD DWG
0948B
PAGE 1 OF 2

STD DWG
0948B
PAGE 1 OF 2

CONFORMED

Copyright © 2004 by Union Pacific Railroad

RAIL TO RAIL	RH ITEM	LH ITEM	BAR TYPE	A (NEW)	A (WORN)	B (NEW)	B (WORN)	C	D	E	F	G	H	J	K	L	N	P	Q	R	C.E. DWG NO.
136RE - 133RE	552-4370		6 HOLE	7 5/16"	—	7 1/16"	—	3 3/32"	3"	2"	2"	38"	6"	3 1/2"	3 1/2"	6"	1 1/8"	1 1/8" x 1 1/2"	1 1/8" x 1 1/2"	1 1/8"	83859
136RE - 132RE	552-4309		6 HOLE	7 1/4"	—	7"	—	3 3/32"	3 3/32"	1 31/32"	1 31/32"	36"	6"	3 1/2"	3 1/2"	6"	1 1/16"	1 1/16" x 1 13/32"	1 1/16" x 1 13/32"	1 1/16"	84017
136RE - 119RE	552-4186	552-4155	6 HOLE	7 5/16"	—	6 13/16"	—	3 3/32"	2 7/8"	1 31/32"	1 13/16"	36"	6"	3 1/2"	3 1/2"	6"	1 1/16"	1 1/16" x 1 13/32"	1 1/16" x 1 13/32"	1 1/16"	83829
SP136RE-119RE	552-9365	552-9225	6 HOLE	7 5/16"	—	6 13/16"	—	3 3/32"	2 7/8"	2"	2"	36"	6 1/2"	2 1/2"	2 1/2"	6 1/2"	1 7/32"	1 7/32" x 1 9/16"	1 7/32" x 1 9/16"	1 7/32"	—
D&RGW136RE-119RE	552-4187	552-4188	6 HOLE	7 5/16"	—	6 13/16"	—	3 3/32"	2 7/8"	2"	2"	36"	6"	2 15/16"	2 15/16"	6"	1 3/16"	1 3/16" x 1 9/16"	1 3/16" x 1 9/16"	1 3/16"	—
136RE - 115RE	552-4124	552-4093	6 HOLE	7 5/16"	—	6 5/8"	—	3 3/32"	2 7/8"	1 31/32"	1 13/16"	36"	6"	3 1/2"	3 1/2"	6"	1 1/16"	1 1/16" x 1 13/32"	1 1/16" x 1 13/32"	1 1/16"	83729
136RE - 112RE	552-4063	552-4032	6 HOLE	7 5/16"	—	6 17/32"	6 11/32"	3 3/32"	2 7/8"	2"	2"	36"	6"	3 1/2"	2 1/2"	6 1/2"	1 1/8"	1 1/8" x 1 1/2"	1 1/8" x 1 1/2"	1 1/8"	83862
SP136RE-SP110RE	552-9385	552-9285	4 HOLE	7 5/16"	—	6 1/4"	6 1/16"	3 3/32"	2 5/8"	2"	1 13/16"	26"	6 1/2"	2 1/2"	2 11/16"	5 1/2"	1 7/32"	1 7/32" x 1 9/16"	1 5/32" x 1 3/8"	1 5/32"	—
SP136RE-SP90ARA	552-9375	552-9280	4 HOLE	7 5/16"	—	5 5/8"	5 3/8"	3 3/32"	2 19/32"	2"	1 23/32"	26"	6 1/2"	2 1/2"	2 11/16"	5 1/2"	1 7/32"	1 7/32" x 1 9/16"	1 1/32" x 1 1/4"	1 1/32"	—
133RE - 132RE	552-3939		6 HOLE	7 1/16"	—	7 1/8"	—	3"	3 3/32"	2"	2"	38"	6"	3 1/2"	3 1/2"	6"	1 1/8"	1 1/8" x 1 1/2"	1 1/8" x 1 1/2"	1 1/8"	83905
133RE - 131RE	552-3909		6 HOLE	7 1/16"	—	7 1/8"	—	3"	3 3/32"	2"	2"	38"	6"	3 1/2"	2 15/16"	6 1/2"	1 1/8"	1 1/8" x 1 1/2"	1 1/8" x 1 1/2"	1 1/8"	83885
133RE - 119RE	552-3878	552-3847	6 HOLE	7 1/16"	—	6 13/16"	—	3"	2 7/8"	2"	1 13/16"	36"	6"	3 1/2"	3 1/2"	6"	1 1/8"	1 1/8" x 1 1/2"	1 1/16" x 1 13/32"	1 1/16"	83726
133RE - 115RE	552-3816	552-3786	6 HOLE	7 1/16"	—	6 5/8"	—	3"	2 7/8"	2"	1 13/16"	36"	6"	3 1/2"	3 1/2"	6"	1 1/8"	1 1/8" x 1 1/2"	1 1/16" x 1 13/32"	1 1/16"	83721
133RE - 112RE	552-3693	552-3663	6 HOLE	7 1/16"	—	6 17/32"	6 11/32"	3"	2 7/8"	2"	2"	36"	6"	3 1/2"	2 1/2"	6 1/2"	1 1/8"	1 1/8" x 1 1/2"	1 1/8" x 1 1/12"	1 1/8"	83863
133RE - 110RE	552-3632	552-3601	6 HOLE	7 1/16"	—	6 1/4"	—	3"	2 5/8"	2"	2"	36"	6"	3 1/2"	2 11/16"	5 1/2"	1 1/8"	1 1/8" x 1 1/2"	1 1/8" x 1 1/2"	1 1/8"	83824
133RE - 100RE	552-3570	552-3539	5 HOLE	7 1/16"	—	6"	—	3"	2 1/2"	2"	1 13/16"	30"	6"	3 1/2"	2 5/8"	5 1/2"	1 1/8"	1 1/8" x 1 1/2"	1 1/8" x 1 13/32"	1 1/8"	83787
133RE - 90RA	552-3509	552-3478	5 HOLE	7 1/16"	—	5 17/32"	5 11/32"	3"	2 19/32"	2"	1 23/32"	30"	6"	3 1/2"	2 5/8"	5 1/2"	1 1/8"	1 1/8" x 1/12"	1" x 1 1/4"	1"	83849
132RE - 119RE	552-3447	552-3416	6 HOLE	7 1/8"	—	6 3/4"	6 11/16"	3 3/32"	2 7/8"	2"	2"	36"	6"	3 1/2"	3 1/2"	6"	1 1/16"	1 1/16" x 1 13/32"	1 1/16" x 1 13/32"	1 1/16"	83884
132RE - 115RE	552-3386	552-3355	6 HOLE	7 1/8"	—	6 5/8"	—	3 3/32"	2 7/8"	2"	1 13/16"	36"	6"	3 1/2"	3 1/2"	6"	1 1/16"	1 1/16" x 1 13/32"	1 1/16"x 1 13/32"	1 1/16"	83850
119RE - 115RE	552-2678		6 HOLE	6 11/16"	6 9/16"	6 1/2"	6 3/8"	2 7/8"	2 7/8"	2"	1 7/8"	36"	6"	3 1/2"	3 1/2"	6"	1 1/16"	1 1/16" x 1 13/32"	1 1/16" x 1 13/32"	1 1/16"	83918
115RE - 112RE	552-2401		5 HOLE	6 5/8"	—	6 17/32"	6 11/32"	2 7/8"	2 7/8"	1 7/8"	1 7/8"	30"	6"	3 1/2"	2 1/2"	6 1/2"	1 1/16"	1 1/16" x 1 13/32"	1 1/16" x 1 13/32"	1 1/16"	83864
115RE - 100RE	552-2271	552-2267	5 HOLE	6 5/8"	6 1/2"	6"	5 13/16"	2 7/8"	2 3/4"	1 13/16"	1 13/16"	30"	6"	3 1/2"	2 1/2"	6 1/2"	1 1/16"	1 1/16" x 1 13/32"	1 1/16" x 1 13/32"	1 1/16"	84015
115RE - 110RE	552-2370	552-2339	5 HOLE	6 5/8"	—	6 1/8"	6"	2 7/8"	2 5/8"	1 13/16"	1 13/16"	30"	6"	3 1/2"	2 29/32"	6"	1 1/16"	1 1/16" x 1 13/32"	1 1/16" x 1 7/16"	1 1/16"	83722
115RE - 100RE	552-2309	552-2278	4 HOLE	6 5/8"	—	6"	—	2 7/8"	2 39/64"	2"	2"	26"	6 1/2"	2 1/2"	2 11/16"	5 1/2"	1 5/32"	1 1/8" x 1 3/8"	1 1/8" x 1 3/8"	1 5/32"	83881
112RE - 100RE	552-1867	552-1857	4 HOLE	6 5/8"	6 5/16"	5 15/64"	5 23/64"	2 7/8"	2 5/8"	1 13/16"	1 13/16"	24"	6 1/2"	2 1/2"	2 21/32"	6"	1 1/16"	1 1/16" x 1 13/32"	1 1/16" x 1 13/32"	1 1/16"	84003
115RE - 90RA	552-2247	552-2216	5 HOLE	6 5/8"	—	5 9/16"	5 7/16"	2 7/8"	2 37/64"	1 13/16"	1 9/16"	30"	6"	3 1/2"	2 29/32"	6"	1 1/16"	1 1/16" x 1 13/32"	1 1/16" x 1 7/16"	1 1/16"	83723
115RE - 85MR	552-2106	552-2155	5 HOLE	6 5/8"	—	5 7/32"	—	2 7/8"	2 21/128"	1 13/16"	1 3/4"	30"	6"	3 1/2"	2 13/32"	5"	1 1/16"	1 1/16" x 1 13/32"	1 1/16" x 1 7/16"	1 1/16"	83724

NOTES:
1. SEE PAGE 1 FOR NOTES AND DETAILS.

UNION PACIFIC RAILROAD ENGINEERING STANDARDS

COMPROMISE JOINTS

ADOPTED: DEC. 31, 1996
REVISED: JUNE 9, 2004
FILE NO.: 0948B

STD DWG
0948B
PAGE 2 OF 2

STD DWG
0948B
PAGE 2 OF 2

Copyright © 2004 by Union Pacific Railroad

CONFORMED

BOLT SIZE	RAIL SIZE	HEAD DEPTH A	SHOULDER DEPTH B	LENGTH UNDER HEAD C	THREAD LENGTH D	NOMINAL DIE OVER THREAD E	SHANK DIA F	HEAD DIMENSIONS G	HEAD DIMENSIONS H	SHOULDER HEIGHT J	HEAD DIAMETER K	NUT WIDTH L	THREADS PER INCH	ITEM NUMBER
1 1/8 X 6 1/2"	SP & DRGW 112-136 UP 136 & 141	45/64"	5/8"	6 1/2"	2 1/2"	1 1/8"	1 1/16"	43/64"	1 55/64"	1 17/32"	1 57/64"	1 11/16"	A.N.C. 7 THREAD	550-9035
1 1/16 X 6"	UP 112, 131 & 133	5/8"	9/16"	6"	2 3/8"	1 1/16"	1"	19/32"	1 5/8"	1 3/8"	1 11/16"	1 5/8"	A.N.C. 8 THREAD	550-6344
1 1/16" X 5 1/2"	UP 110	5/8"	9/16"	5 1/2"	2 3/8"	1 1/16"	1"	19/32"	1 5/8"	1 3/8"	1 11/16"	1 5/8"	A.N.C. 8 THREAD	550-6226
1" X 6"	136,132,119, 115,CNW 112	5/8"	9/16"	6"	2 1/4"	1"	15/16"	19/32"	1 5/8"	1 3/8"	1 11/16"	1 5/8"	A.N.C. 8 THREAD	550-5873
1" X 5 1/2"	CNW 110 SSW 115	5/8"	9/16"	5 1/2"	2 1/4"	1"	15/16"	19/32"	1 5/8"	1 3/8"	1 11/16"	1 5/8"	A.N.C. 8 THREAD	550-5756
15/16" X 4 5/8"	UP 90	35/64"	1/2"	4 5/8"	2 1/8"	15/16"	7/8"	33/64"	1 25/64"	1 7/32"	1 31/64"	1 1/2"	9 THREADS	550-5404
7/8" X 5"	UP CNW 90	35/64"	1/2"	5"	2"	7/8"	13/16"	33/64"	1 25/64"	1 7/32"	1 31/64"	1 7/16"	9 THREADS	550-5050

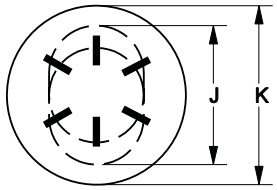

BOLT HEAD

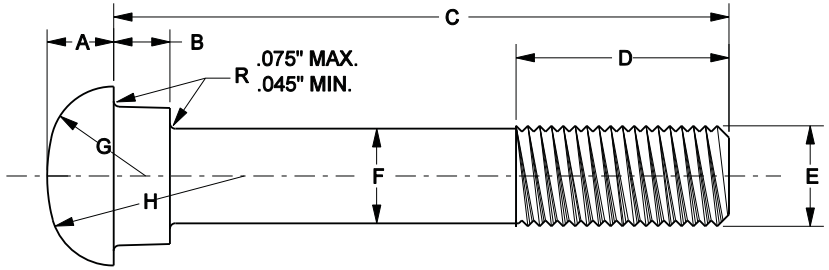

BOLT

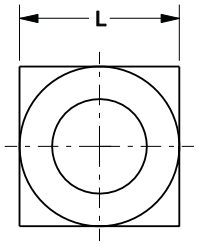

SQUARE NUT

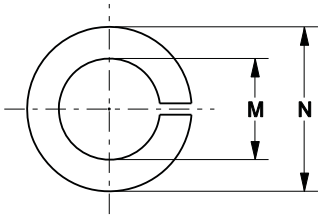

SPLIT WASHER

ITEM NO.	NOMINAL WASHER SIZE	INSIDE DIAMETER M	OUTSIDE DIAMETER N
550-7060	7/8"	.905"	1.576"
550-7177	15/16"	.970"	1.688"
550-7295	1"	1.042"	1.799"
550-7413	1 1/16"	1.107"	1.910"
550-7648	1 1/8"	1.188"	2.218"

NOTES:
1. ITEM NUMBERS IN BOLT CHART ARE TO INCLUDE APPROPRIATE BOLT, WASHER AND NUT.
2. TRACK BOLTS TO CONFORM TO SAE J429 GRADE 8 SPECIFICATIONS.
3. NUTS TO HAVE 2H PHYSICAL REQUIREMENTS.
4. TENSILE STRENGTH:
   150,000 PSI
   YIELD STRENGTH:
   130,000 PSI
   ELONGATION 12% MIN.
   REDUCTION OF AREA 35% MIN.
   PROOF LOAD 120,000 PSI
   ALL THREADS TO BE FREE FIT.

UNION PACIFIC RAILROAD ENGINEERING STANDARDS

TRACK BOLT

UNION PACIFIC

ADOPTED: FEB. 6, 1997
REVISED: OCT. 10, 2005
FILE NO.: 0950H

STD DWG
0950H

STD DWG 0950H

Copyright © 2005 by Union Pacific Railroad

CONFORMED

BNSF ITEM NUMBERS		
ITEM NO.	WT	SPIKES/KG
527570005	200	241
527570014	-	BULK

CSX ITEM NUMBERS		
ITEM NO.	WT	SPIKES/KG
013.8250325.1	100	120
013.8250327.1	-	BULK

CN ITEM NUMBERS		
ITEM NO.	WT	SPIKES/KG
01-03-303	200	241

NS ITEM NUMBERS		
ITEM NO.	WT	SPIKES/KG
640-903705	200	241

CP ITEM NUMBERS		
ITEM NO.	WT	SPIKES/KG
002840231	50	62
002840256	-	BULK

UPRR ITEM NUMBERS		
ITEM NO.	WT	SPIKES/KG
550-6707	150	180
550-6710	-	BULK

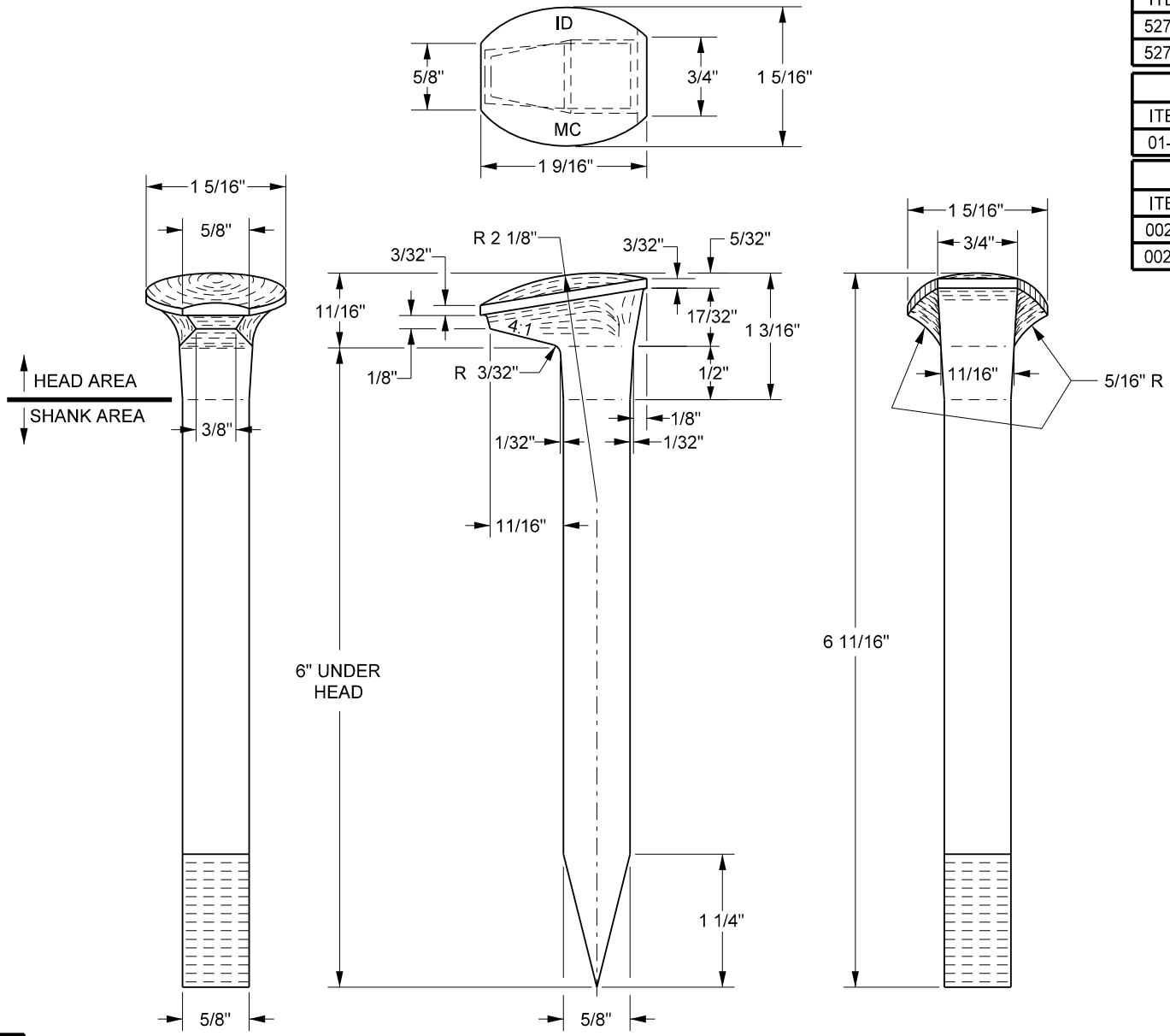

NOTES:

1. MATERIAL AND WORKMANSHIP TO BE IN ACCORDANCE WITH CURRENT AREMA MANUAL REQUIREMENTS FOR MEDIUM CARBON SPIKES.
2. PERMISSIBLE SHANK STRAIGHTNESS VARIATION, MEASURED IN EITHER PLANE, SHALL NOT EXCEED 0.0313".
3. MANUFACTURER'S I.D. AND THE LETTERS "MC" SHALL BE PRESSED ON THE HEAD OF EACH SPIKE WHILE BEING FORMED.
4. WEIGHT = APPROXIMATELY 0.83 LBS. EACH.

BNSF RAILWAY CN CSX NS NORFOLK SOUTHERN UNION PACIFIC

COMMON STANDARDS

6" TRACK SPIKE

6" CUT TRACK SPIKE

FILE OWNER: UPRR	DATE: JULY 16, 2012
REV. NO.: 3	DWG NO: 130005

130005

CONFORMED

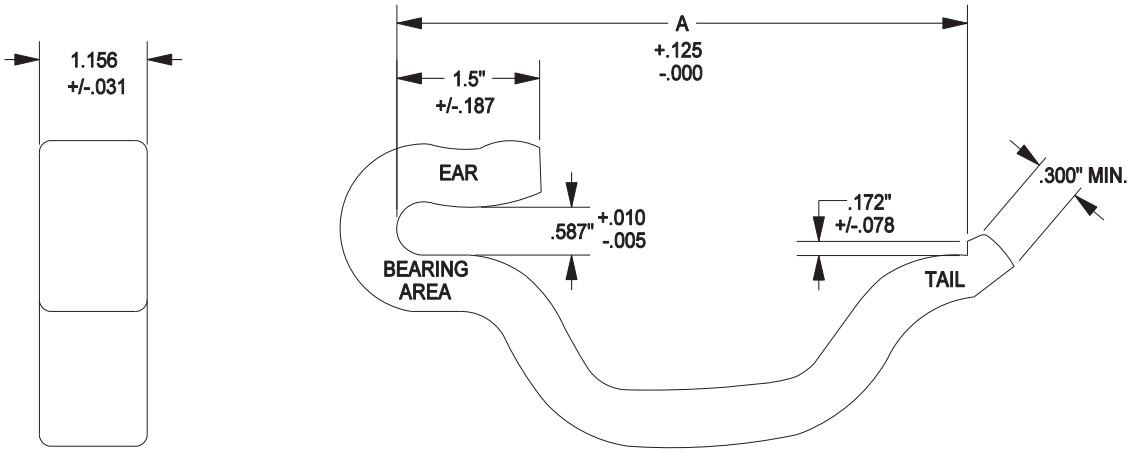

NOTES:
1. MATERIAL: HIGH CARBON STEEL

2. HEAT TREAT TO Rc 34-47
   TARGET RANGE Rc 39-44

3. ALL DIMENSIONS ARE MINIMUM UNLESS OTHERWISE SPECIFIED.

4. TYPICAL CHEMISTRY: CARBON .58-.90, MANGANESE .7-1.1, SILICON .5 MAX

RAIL BASE SIZE	A	BNSF ITEM NO.	CN ITEM NO.	CSX ITEM NO.	UPRR ITEM NO.	WEIGHTS
5 1/2"	5.625"	520130009	01-30-207	013.0161200.1	550-1630	1.96 LBS.
6"	6.125"	520130012	01-30-208	013.0160000.1	550-1650	2.094 LBS.

BNSF RAILWAY

CN CSX UNION PACIFIC

BAR STOCK ANCHOR FOR 5 1/2" AND 6" BASE RAIL

FILE OWNER: UPRR | DATE: JUNE 1, 2005

REV. NO.: 1 | DWG NO: 135010

135010

CONFORMED

Appendix G

Historical Geotechnical Borings

CONFORMED

Project 3151 -
L.I.D #4 - Area
SoF City Hall
between railroad
track + 680

13

CONFORMED

RECEIVED
MAR 13 1972

March 7, 1972
Job No. 23-238-70

Project 3151

	Dist.	Init.
1.		
2.		
3.		
4.		
File		
X-File		

3151

SOILS INVESTIGATION

MILPITAS L.I.D. 71-4
MILPITAS, CALIFORNIA

FOR

BISSELL AND KARN

JOB NO. 23-238-70 MARCH 7, 1972

62-79 on Index Map

CONFORMED

GEOLABS-CALIFORNIA, INC.

March 7, 1972
Job No. 23-238-70

SOILS INVESTIGATION

Milpitas L.I.D. 71-4
Milpitas, California

For

BISSELL AND KARN

INTRODUCTION

This report presents the results of our soils investigation performed for the subject project. Included in the investigation were foundation design criteria for the two bridges, and R-Value for pavement design on the streets to be constructed. The purpose of this investigation was to determine the nature of the soils underlying the site, to ascertain their engineering properties and to provide design and construction recommendations.

The scope of work performed for this investigation included:

1. Foundation investigations for the proposed crossings of Ames Avenue and Yosemite Drive at Berryessa Channel in Milpitas, California. The scope of work for these foundation investigations is as follows:

   A. Drilling, logging and sampling 4 exploratory borings to depths of 80 to 85 feet.

   B. Performing index and engineering properties tests on representative soil samples.

   C. Engineering analyses to develop foundation design criteria.

2. R-Value sampling and testing of a part of 16 exploratory test pits along the proposed city streets included in this project.

The location of the exploratory borings and the test pits are shown on Plate 1. The Boring Logs are presented on Plates 3 through 6, and the laboratory test data are presented on Plates 7 through 18.

CONFORMED

PLANNED CONSTRUCTION

The proposed project consists of the design and construction of bridge crossings of Berryessa Channel at Ames Avenue and Yosemite Drive and the design and construction of:

1. Wrigley Drive between Calaveras Road and Landess Avenue.

2. The extension of Ames Avenue westerly to Wrigley Drive.

3. The extension of Yosemite Drive westerly to Wrigley Drive.

4. The extension of A Street westerly and southerly to Yosemite Drive.

STRUCTURAL CONSIDERATIONS

The two bridges will cross Berryessa Channel, one at Ames Avenue and the other at Yosemite Drive. Information concerning the future improvements of the channel was furnished by Mr. Ed Ferguson of the Santa Clara County Flood Control and Water District. The channel will, at some time in the future, be widened to 44 feet bottom width with 2 to 1 side slopes. At the present time, lining the channel is not planned.

Information concerning the bridges and street criteria was supplied by Mr. Bob Crossett of Bissell and Karn, Inc. The bridges are to be of reinforced concrete construction, both bridges being 2 span design at 32 feet per span. For the Yosemite Drive bridge, the design loads are approximately as follows:

1. 530 kips for each abutment.

2. 1155 kips for the center pier.

The design structural loads are as follows for the Ames Avenue bridge:

1. 387 kips for each abutment.

2. 843 kips for the center pier.

CONFORMED

SITE CONDITIONS

The subject site is located between Calaveras Boulevard and Landess Avenue, and between Dempsey Railroad tracks and Freeway 680, north-south and west-east, repsectively, as shown on Plate 1. The surface of the site is relatively flat with total relief of approximately 40 feet. Most of the surface of the subject site has been disked to a depth of 1 to 1½ feet. Berryessa Channel runs north-south through the subject site and varies from 20 to 30 feet in width and 10 to 12 feet in depth.

The subject site is located immediately southeast of the intersection of Calaveras Road and the Western Pacific Railroad tracks in Milpitas, California. It is bounded by the Calaveras Road to the north, Dempsey Road to the east, Landess Avenue to the south and the Western Pacific Railroad tracks to the west. The surface of the site slopes gently downward to the northwest at approximately 3/4 percent with maximum relief across the site of 45 feet. The site is presently unimproved except for Berryessa Channel improvements.

FIELD EXPLORATION

The two bridge sites were explored on January 18, 19, and 20, 1972, by drilling 4 exploratory test borings with a truck-mounted drill rig. Borings 1, 2, and 3 were 80 feet in depth and Boring 4 was drilled to a depth of 85 feet. The boring locations are shown on Plate 1. Borings 1 and 3 were drilled on the west and east sides of Berryessa Channel, respectively, along the future alignment for Yosemite Drive. Borings 2 and 4 were located as close as possible to the proposed location of the bridge across Berryessa Channel at Ames Avenue, on the west and east sides of the channel, respectively. All borings were drilled using rotary wash techniques (drillers mud). Two and one-half inch I.D. ring samples were taken at selected depths with a Geolabs ring sampler driven by a 300 pound weight (slip jars) falling 18 inches. The subsurface profiles encountered were continuously logged by our field engineer and classified by visual examination in accordance with the Unified Soil Classification System. Portions of each sample were placed in moisture-proof containers and transported to our laboratory for further evaluation and testing.

CONFORMED

On January 21, 1972, our field representative excavated a total of 16 backhoe exploratory test pits along the proposed future street alignments on the subject site. The test pits varied in depths from 3 to 5 feet and the locations are shown on Plate 1. The subsurface soil profile encountered was logged by our field representative, and the exploratory test pit descriptions are found in Appendix A. Representative bulk soil samples were obtained for further evaluation and laboratory testing. Ten bulk samples were selected for R-Value testing, and the results are also found in Appendix A.

LABORATORY TESTS

Classification

The field classification of the exploratory test borings was verified in the laboratory, also in accordance with the Unified Soil Classification System.

Natural Moisture Content and Dry Density

Natural water content and dry density determinations were performed on most of the ring samples. In determining the natural dry density, the ends of the specimens were trimmed to obtain a smooth square surface. After measuring the volume and wet weight, the specimens were placed in an oven to remove all moisture. The oven-dried samples were then weighed and the moisture content and dry density calculated. The dry unit weights and moisture contents determined are shown on the attached "Boring Logs".

Shear Tests

Shear tests were performed in the direct shear machine which is of the strain control type. The rate of deformation is approximately 0.05 inches per minute. A portion of the samples were sheared under varying confining loads in order to determine the shear strength at confining pressures corresponding to the design overburden pressure. Another portion of the samples were sheared under varied confining loads in order to determine the Coulomb shear strength parameters, cohesion and angle of internal friction. These samples were tested in an artificially saturated condition. Results of the direct shear tests are plotted on the attached Shear Test Diagrams, Plates 7 through 14.

CONFORMED

Consolidation Tests

Consolidation tests were performed on samples of the underlying soils to determine their settlement characteristics. Settlement predictions of the soil's behavior under load are made on the basis of the consolidation tests. The consolidation apparatus is designed to receive one of the one-inch high rings. Loads are applied in several increments in a geometric progression, and the resulting deformations are recorded at selected time intervals. Porous stones are placed in contact with the top and bottom of each specimen to permit addition and release of pore fluid. Results are plotted on the "Consolidation-Pressure Curve", Plates 15 and 16.

Atterberg Limits

Liquid and plastic limits of a selected sample were determined on that portion of soil passing the #40 sieve, in accordance with ASTM Test Designations D 423-66 and D 424-59. The results of the Atterberg Limits Tests are presented on Plate 17.

Sieve Analysis

Grain-size distribution was determined for a soil sample by performing sieve analysis in accordance with ASTM Test Designation D 422-63, the results are presented on Plate 18.

Hveem Stabilometer Test ("R"-Value)

To provide paving recommendations on the site, Hveem Stabilometer Tests (State of California Test Method No. California 301-F) were performed on bulk samples from locations on the site as shown on Plate 1 to determine the R-Value of the on-site soils. The results of the tests are presented on Plates 19 through 28.

SOIL CONDITIONS

Based upon our exploratory borings and test pits, we believe that the site is underlain by the following approximate subsurface soil profile:

1. On each side of Berryessa Channel there is a one to three foot thickness of fill for the unimproved roads which parallel the channel. This material is a clayey, sandy gravel, which is light brown in color and loose to medium dense in relative density.

CONFORMED

2. Site of Bridge for Yosemite Drive:

A. The surficial layer of clayey gravel was underlain by 15 to 17 feet of high plasticity clay. These clays were dark brown to grey in color and often contained tan and rust colored streaks. The material was damp to moist, is considered highly expansive, and was firm to stiff in consistency.

B. The above layer was underlain by 33 to 34 feet of low moderate plasticity clays, sandy clays and clayey sands as shown on the "Boring Logs". These materials were typically tan to light brown in color with occasional streaks, and were firm to very stiff in consistency, and loose to dense in relative density.

C. The succeeding layer of soil consisted of approximately 25 feet of high plasticity clays. These clays changed in color from brown with occasional tan streaks to bluish-green with depth and occasionally contained sand and/or gravel. These materials were very stiff to hard in consistency.

D. The above high plasticity clays were underlain by light brown to tan moderate plasticity sandy clays and clayey sands. These materials were hard in consistency and dense in relative density.

3. Site of Proposed Bridge for Ames Avenue:

A. The one to three foot thick surficial clayey gravel layer is underlain by 16 to 17 feet of high plasticity clay. These clays were commonly grey to brown in color and often contained tan and rust colored streaks. The material was damp to moist, is considered highly expansive, and was firm to stiff in consistency.

B. The layer of high plasticity clay was underlain by 35 to 36 feet of low to moderate plasticity clays, sandy clays, and clayey sands. These materials were light brown to tan in color, and were stiff to very stiff in consistency and dense in relative density.

CONFORMED

C. The above layer was underlain by approximately 28 feet of high plasticity clays which varied in color from brown to bluish-green with depth. These materials also occasionally contained coarse sand and fine gravel and were very stiff to hard in consistency.

D. The high plasticity clays overlay light brown clayey sands and gravels which were very dense in relative density.

Ground Water

Borings were not left open for a sufficient period of time to observe stabilized water levels. Based on the levels observed in three of the borings one day after drilling each one, it is our opinion that the natural ground water surface is at, or below, twenty feet below the existing ground surface. This could fluctuate during winter and summer seasons.

CONCLUSIONS AND RECOMMENDATIONS

General

It is our opinion that the proposed bridges may be constructed on this site provided that the project design and construction incorporates the recommendations presented herein and further provided that they are supported on a driven pile foundation deriving support as recommended herein.

Pile Foundation

Due to the heavy loads induced by the reinforced concrete bridges, piles are necessitated to support the structures. On the basis of our analyses, we estimate that Class 45-2 Piles, as per page B2-1 of State of California-Division of Highways Standard Plans (January 1971 Edition), will have a minimum factor of safety against bearing failure of 2.5 for design loads of 45 tons if provided in the following lengths and tip elevation:

	Abutments		Center Pier	
	Pile Cut Off Elevation-Ft.	Pile Tip Elevation-Ft.	Pile Cut Off Elevation-Ft.	Pile Tip Elevation-Ft.
Ames Avenue	43	-7	32	-13
Yosemite Drive	35	-15	24	-21

CONFORMED

The capacities indicated represent the vertical downward capacity of single vertical piles and should be reduced by 50 percent in calculating the uplift capacity. The design capacities are for dead plus real live loads only. The capacities may be increased by 1/3 when considering short duration wind and seismic loading. While pile groups are not anticipated, if they are selected, we recommend a minimum spacing of 3½ feet between pile centers and a reduction in capacity in accordance with the Converse-Labarre formula for efficiency of piles within a group.

We expect that piles designed in accordance with the foregoing will experience a small amount of settlement as a result of soil consolidation below the pile tips. It is our opinion that this settlement will be less than 1 inch.

The cost of cutting off precast concrete piles to the desired cut-off elevation is significant and can be avoided by installing all piles for each bridge at the desired tip elevation and of appropriate length so that when driven to the desired tip elevation, the top of the pile is at the cut-off elevation.

With regard to installation, we recommend that piles be driven in fixed leads with a hammer which develops not less than 15,000 foot-pounds of energy per blow and that all piles for a given section be driven to within two feet of the same tip elevation, but not less than the elevation shown above. All piles should be accurately located (plus or minus 3 inches) and driven within ¼ inch per foot of vertical. Except as specifically noted in this paragraph, the piles should be installed in accordance with Section 49 of the State of California-Division of Highways Standard Specification, January 1971 edition. We recommend that the entire driving operation be observed and recorded by one of our engineers to ensure proper installation of the piles.

Lateral Design

Resistance to lateral loading may be provided by passive earth pressure or the sides of piles. The passive earth pressure may be computed as an equivalent fluid having a desntiy of 600 pounds per cubic foot with a maximum passive earth pressure of 6000 pounds per square foot.

Pavement Design

Sixteen test pits were excavated and bulk samples obtained along the proposed extensions of Wrigley Drive, Ames Avenue, Yosemite Drive and A Street. Ten "R"-Value tests were performed on representative bulk soil samples in accordance with Test Method No. California 301-F, the results of which are presented in Plates 19 through 28. The bulk of the samples tested had "R"-Values between 19 and 35

CONFORMED

with an overall high of 66 and low of less than 5. We recommend that the pavement sections be designed using an "R"-Value of 20 subject to the provision that those limited areas with "R"-Values less than 20 be identified during construction and that the section in such areas be locally increased as appropriate for a design "R"-Value of 5.

Plan and Specification Review and Cosntruction Inspection

The complexity of this site is sufficient to warrant review of the plans and specifications by this office to ensure that the intent of the recommendations contained herein are fully incorporated in the design and construction of this project. We recommend that the pile installation operation be inspected and certified by this office.

Seismic Considerations

The San Francisco Bay Area is recognized by geologists and seismologists as one of the most active seismic regions in the United States. The significant earthquakes which occur in the Bay Area are associated with crustal movements along well defined active fault zones. The traces of the well known San Andreas Rift Zone is located 15 miles southwest of the project site and the Hayward Fault is approximately one-half mile to the northeast of the site. We therefore believe that the probability of ground rupture on this site should not be a design consideration.

On the basis of recent studies, it is reasonable to assume that the subject site will be subjected to ground shaking from at least one moderate to severe earthquake during the design life. We recommend that this be considered in the design of this project, although we do not believe that it is necessary to take unusual design measures as compared to similar developments in the Bay Area.

INVESTIGATION LIMITATIONS

Our investigation was based on a surface reconnaissance, the drilling of four exploratory borings, sixteen exploratory tests pits for "R"-Value testing, laboratory tests, and engineering studies. Materials encountered in the borings are believed to be representative of the total area; however, the soil may vary in character

CONFORMED

between borings. The conclusions and recommendations contained herein are professional opinions derived in accordance with current standards of professional practice and no warranty is expressed or implied.

Respectfully submitted,

GEOLABS-CALIFORNIA, INC.

Richard T. Gomm
Staff Engineer

Frank Berlogar
Manager, RCE 20383

RTG:FB:bb

Enclosures: Plate 1 - Site Plan
Plate 2 -
Plates 3 through 6 - Boring Logs
Plates 7 through 14 - Shear Test Diagrams
Plates 15 through 16 - Consolidation-Pressure Curves
Plate 17 - Atterberg Limits
Plate 18 - Sieve Analysis
Plates 19 through 28 - Hveem Stabilometer Tests
Appendix A - Logs of Test Pits

CONFORMED

GEOLABS, INC.

3151

BORING LOG B-1

Drilling Date Jan. 18, 1972 Driving Wt. 300 lbs. Elevation 40 ft.

Job Milpitas I.I.D. 71-4 Drop 18 inches Work Order 23-238-70

Sample	Depth ft	Blows ft	Moisture %	Density pcf	Dr Unit Weight pcf	Depth ft	Graphic	USCS	Description
								GC GP	Clayey, sandy gravel, light brown, coarse grained, medium dense
2		5/10/13	12.0						
								CH	Gravelly clay, dark brown, high plasticity, moist, stiff
5		6/10/8	13.2	108.6		5			
								CL	Sandy clay, moderate plasticity, tan with occasional rusty brown streaks, damp, stiff (coarse sand to fine gravel)
								CH	Clay, light grey with white streaks, high plasticity, moist, stiff
8		5/9/13	20.7	98.0					
					10				
13		7/10/18	20.5	103.7					
								CH	Clay, brown with streaks, high plasticity, moist, very stiff
					15				
									Grading sandy
18		7/7/6	17.9	103.2				CL	Clay, light brown, low to moderate plasticity, very moist, stiff
					20				

CONFORMED

PLATE 3

GEOLABS, INC.

3151

BORING LOG B-1 (continued)

Drilling Date Jan. 18, 1972 Driving Wt. 300 lbs. Elevation 40 ft.

Job Milpitas I.I.D. 71-4 Drop 18 inches Work Order 23-238-70

Sample Depth ft	Blows/6"	Moisture Content %	Dry Unit Weight pcf	Depth ft	Test	Graphic Symbol	Description
						CL	Clay, light brown, low to moderate plasticity, very moist, stiff (continued)
23	12/12/16						
				25			
						GC SC	Grading sandy to gravelly
28	13/17/29	14.0	109.6			CL SC	Sandy clay, brown, moderate plasticity, moist, very stiff
				30		CL	Clay, tan with bluish grey and rusty brown streaks, moderate plasticity, moist, very stiff
33	10/15/20	16.8	107.2				
				35			
							Grading sandy
38	13/19/31	13.8	114.4				
				40			

CONFORMED

PLATE 3-A

GEOLABS, INC.

BORING LOG B-1 (continued)

Drilling Date Jan. 18, 1972 Driving Wt. 300 lbs. Elevation 40 ft.

Job Milpitas, I.I.D. 71-4 Drop 18 inches Work Order 23-238-70

Sample	Depth ft	Blows/ft	Moisture Content %	Dry Unit Weight pcf	Depth in feet	Graphic Log	Description
							Grading sandy (continued)
43		18/35/52	16.7	109.3			Sandy clay, light brown to tan, moderate plasticity, moist, very stiff
					45		
							Occasional coarse sand
48		26/38/45	17.6	107.1			
					50		
						CH	Clay, brown with occasional tan streaks, high plasticity, moist, hard
53		39/46	20.0	103.2			
					55		
							Grading gravelly
58		45/55	19.3	109.2			
					60		

CONFORMED

GEOLABS, INC.

3151

BORING LOG B-1 (continued)

Drilling Date Jan. 18, 1972 Driving Wt. 300 lbs. Elevation 40 ft.

Job Milpitas, L.I.D. 71-4 Drop 18 inches Work Order 23-238-70

Sample	Depth ft	Blows/ft	Moisture Content %	Dry Unit Weight pcf	Depth ft	Graphic	USCS	Description
								Grading gravelly (continued)
63		20/40	16.9	109.1				
								Grading sandy
					65			
							CH	Clay, brown with green tint and rusty brown streaks, high plasticity, moist, hard
68		37/47	16.0	110.7				
					70			
							CH	Clay, blue-green, high plasticity, damp to moist, hard
73		23/35	11.3	110.0				
					75			
							CL	Sandy clay, light brown with tan streaks, moist, moderate plasticity, hard
79		29/50	16.6	108.0				
					80			Termination Depth: 80 feet

CONFORMED

GEOLABS, INC.

BORING LOG B-2

3151

Drilling Date Jan. 18, 1972 Driving Wt. 300 lbs. Elevation 46.5 ft.

Job Milpitas, I.J.D. 71-4 Drop 18 inches Work Order 23-238-70

Sample	Depth ft	Blows per ft	Moisture Content %	Dry Unit Weight pcf	Depth in feet	Graphic Log	Description
						GP GC	Clayey sand and gravel, light brown, coarse grained, medium dense
2		8/15/17 14.3					
						CH	Clay, dark brown with occasional light brown streaks, high plasticity, damp to moist, stiff
5		1/3/6 14.7			5	CL	Sandy clay, brown, low to moderate plasticity, damp, firm
8½		3/6/8 17.8				CH	Clay, dark brown to black with occasional yellow streaks, high plasticity, firm
					10	CL	Sandy clay, brown with tan streaks, moderate plasticity, moist, stiff
14		7/12/18 19.9			15	CH	Clay, brown with tan and occasional yellow streaks, high plasticity, moist, stiff
19		7/14/23 18.0			20	CL	Clay, light brown with dark brown and rusty brown streaks, high plasticity, moist, very stiff

CONFORMED

GEOLABS, INC.

3151

BORING LOG B-2 (continued)

Drilling Date Jan. 19, 1972 Driving Wt. 300 lbs. Elevation 46.5 ft.

Job Milpitas, I.I.D. 71-4 Drop 18 inches Work Order 23-238-70

Sample	Depth ft	Blows/ft	Moisture Content %	Dry Unit Weight pcf	Depth in feet	Graphic Log	Description
						CL	Clay, light brown with dark brown and rusty brown streaks, high plasticity, moist, very stiff (continued)
24		11/12/15	17.6	110.0	25		Occasional coarse sand to fine gravel
							Grading sandy
29		6/14/17	19.5	106.4	30	CH	Clay with occasional coarse sand, light brown with light tan and dark brown streaks, high plasticity, moist, stiff
						CL	Sandy clay, tan with rusty brown and light tan streaks, medium to high plasticity, damp to moist, hard
34		25/55	25.7	101.2	35		
39		7/19/30					Occasional coarse sand, very stiff
					40		

CONFORMED

GEOLABS, INC.

BORING LOG B-2 (continued)

3151

Drilling Date Jan. 19, 1972 Driving Wt. 300 lbs. Elevation 46.5 ft.

Job Milpitas, L.I.D. 71-4 Drop 18 inches Work Order 23-238-70

Sample	Depth ft	Blows per ft	Moisture Content %	Dry Unit Weight pcf	Depth in feet	Graphic Log	Description
							Occasional coarse sand, very stiff (continued)
44		13/51	17.7	108.6	45		Occasional gravel
49		11/13/17	21.2	105.3	50		
							Grading gravelly
54		11/24	13.7	114.5	55	CH	Clay, brown with occasional light tan streaks, high plasticity, moist, very stiff to hard
							Grading darker brown
59		11/35	19.2	105.6	60		

CONFORMED

GEOLABS, INC.

BORING LOG B-2 (continued)

3151

Drilling Date Jan. 19, 1972 Driving Wt. 300 lbs. Elevation 46.5 ft.

Job Milpitas, L.I.D. 71-4 Drop 18 inches Work Order 23-238-70

Sample	Depth ft	Blows/ft	Moisture Content %	Dry Unit Weight pcf	Depth ft	Graphic Log	USCS	Description
								Grading darker brown (continued)
64	14/29							Occasional fine gravel
					65			
69	19/32	22.5	102.7				CH	Clay with occasional fine gravel, brownish green with light tan and brown streaks, high plasticity, moist, very stiff to ha
					70			
74	12/40	20.2						
					75			
79	18/42	19.0	107.2					Grading silty
					80			
								Termination Depth: 80 feet

CONFORMED

GEOLABS, INC.

3151

BORING LOG 1-3

Drilling Date Jan. 19, 1972 Driving Wt. 300 lbs. Elevation 40.5 ft.

Job Milpitas I I D 71-4 Drop 18 inches Work Order 23-238-70

Sample	Depth ft	Blows/ft	Moisture Content %	Dry Unit Weight pcf	Depth in feet	Graphic	USCS	Description
							GP GC	Clayey, sandy gravel, brown, medium dense
2		6/13					CH	Clay with occasional gravel, dark brown, high plasticity, damp to moist, stiff
3½		8/14	18.5	102.5	5			
							CH	Clay, dark grey, high plasticity, moist, firm
9		5/7	22.0	95.1	10			
13		3/6	19.5	101.6			CH	Clay with occasional coarse sand, light brown with light tan streaks, high plasticity, moist, firm
					15			
18		5/6	15.8	106.5			CL	Sandy clay, brown with light brown streaks, moderate plasticity, moist, firm
					20			

CONFORMED

PLATE 5

GEOLABS, INC.

3151

BORING LOG B-3 (continued)

Drilling Date Jan. 19, 1972 Driving Wt. 300 lbs. Elevation 40.5 ft.

Job Milpitas I.I.D. 71-4 Drop 18 inches Work Order 23-238-70

Sample	Depth ft	Blows per ft	Moisture Content %	Dry Unit Weight pcf	Depth in Feet	Graphic Log	Description
						CL	Sandy clay, brown with light brown streaks, moderate plasticity, moist, firm (continued)
							Grading sandy
23		7/10	22.2	100.2		SC	Clayey sand, light brown, fine with occasional coarse sand, loose to medium dense
					25	CL	Clay with occasional coarse sand, light brown to tan with light tan and dark brown streaks low to moderate plasticity, moist to very moist, stiff
28		6/12	16.5	107.5			
					30		
33		15/16	17.0	107.6			
					35		
38		12/38				CL SC	Clayey sand, light brown, coarse grained, medium dense, with occasional fine gravel
					40		

CONFORMED

PLATE 5-A

GEOLABS, INC.

3151

BORING LOG B-3 (continued)

Drilling Date Jan. 19, 1972 Driving Wt. 300 lbs. Elevation 40.5 ft.

Job Milpitas, I.I.D. 71-1 Drop 18 inches Work Order 23-238-70

Sample	Depth ft	Blows/6 in ft	Moisture Content %	Dry Unit Weight lb/cu ft	Depth in	Graphic Log	Description
						CL	Sandy clay with occasional coarse sand, light brown, moderate plasticity, very stiff
43		12/25	17.7	109.0			
					45		
48		11/18	17.8	108.7			
					50		
						CH	Clay, brown with occasional tan streaks, high plasticity, moist, very stiff
53		13/20	22.2	104.0			
					55		
58		15/41	18.7	109.0			Grading to hard
					60		

CONFORMED

GEOLABS, INC.

3151

BORING LOG B-3 (continued)

Drilling Date Jan. 19, 1972 Driving Wt. 300 lbs. Elevation 40.5 ft.

Job Milpitas I.I.D. 71-4 Drop 18 inches Work Order 23-238-70

Sample	Depth ft	Blows Per ft	Moisture Content %	Dry Unit Weight pcf	Depth in Feet	Graphic Log	Description
							Grading to hard (continued)
63		15/30	20.8	104.2			
					65		
68		15/20	22.4	103.3			
					70		
73		18/24	11.6				
					75		
							Grading sandy to gravelly (fine)
						CL	Sandy clay with occasional coarse sand, tan, moderate plasticity, moist, hard
79		24/38	14.9	113.6			
					80		
							Termination Depth: 80 feet

CONFORMED

GEOLABS, INC.

3151

BORING LOG B-4

Drilling Date Jan. 20, 1972 Driving Wt. 300 lbs. Elevation 46.7 ft.

Job Milpitas, I.I.D. 71-4 Drop 18 inches Work Order 23-238-70

Sample	Depth ft	Blows/ft	Moisture Content %	Dry Unit Weight pcf	Depth ft	Graphic Log	USCS	Description
							GC GP	Clayey, sandy gravel, brown, coarse, medium dense
2		7/11	30.4				CH	Clay with occasional coarse sand, dark brown to black, high plasticity, damp to moist, stiff
								Grading lighter brown
5		10/12	8.4	116.3	5		GC GP	Clayey, sandy gravel, tan with some yellow streaks, coarse, medium dense
9		7/9	16.7	107.3	10		CL	Gravelly to sandy clay, grey with occasional yellowish brown streaks, moderate plasticity, moist, stiff
								Grading brown
14		7/11	22.4	99.2	15		CH	Clay, greyish brown with light tan and dark brown streaks and occasional yellow streaks, high plasticity, moist, very stiff
19		9/11	19.2	105.5	20		CL	Sandy clay, tan with light tan, dark brown and rusty brown streaks, moderate plasticity, moist, stiff

CONFORMED

GEOLABS, INC.

3151

BORING LOG B-4 (continued)

Drilling Date Jan. 20, 1972 Driving Wt. 300 lbs. Elevation 46.7 ft.

Job Milpitas, I.I.D. 71-4 Drop 18 inches Work Order 23-2718-70

Sample Depth ft	Blows per ft	Moisture Content %	Dry Unit Weight pcf	Depth in feet	Graphic Log	Description
					CL	Sandy clay, tan with light tan, dark brown and rusty brown streaks, moderate plasticity, moist, stiff (continued)
24	22/31	16.2	116.1	25	GC SC	Clayey gravel to clayey sand, light brown, coarse to fine gravel, coarse sand, dense
29	8/14	21.0	103.2	30	CH	Clay with occasional coarse sand, tan with light tan and occasional dark brown and rusty brown streaks, high plasticity, moist, stiff
34	10/18	22.4	103.5		CL	Sandy clay, tan with rusty brown, light tan and brown streaks, moderate plasticity, damp to moist, stiff
				35	SC	Clayey sand, brown, coarse, medium dense
					CL	Sandy clay, light brown with light tan streaks, moderate plasticity, moist, very stiff
39	18/18	18.5	107.0	40		

CONFORMED

GEOLABS, INC.

3151

BORING LOG B-4 (continued)

Drilling Date Jan. 20,1972 Driving Wt. 300 lbs. Elevation 46.7 ft.

Job Milpitas, I.I.D. 71-4 Drop 18 inches Work Order 21-238-70

Sample	Depth ft	Blows ft	Atterberg	Content %	Dry Unit Weight pcf	Depth m	Graphic Log	Description
							CL	Sandy clay, light brown with light tan streaks, moderate plasticity, moist, very stiff (continued)
44		18/35	14.7	112.0		45	SC	Clayey sand, light brown, varies from coarse to fine, dense to very dense
49		11/18	20.2	103.9		50	CL	Sandy clay with occasional coarse sand, light brown with light tan and occasional rusty brown streaks, moderate plasticity, moist, very stiff
54		21/32	16.1	112.5		55	CH	Clay, brown with occasional light tan and rusty brown streaks, high plasticity, moist, hard
59		17/37	16.5	109.4		60		

CONFORMED

GEOLABS, INC.

3151

BORING LOG B-4 (continued)

Drilling Date Jan. 20, 1972 Driving Wt. 300 lbs. Elevation 46.7 ft.

Job Milpitas, I.I.D. 71-4 Drop 18 inches Work Order 23-238-70

Sample	Depth ft	Blows/6 in	Moisture Content %	Dry Unit Weight pcf	Depth ft	Graphic Log	Description
						CH	Light brown with light tan and blue-green streaks
							Grading blue-green
64	27/36		22.7	105.0	65		
69	22/24		19.7	108.1	70		
74	26/39		19.0	109.9	75		
79	16/28		17.8	106.8	80		Occasional coarse sand

CONFORMED

GEOLABS, INC.

3151

BORING LOG B-4 (continued)

Drilling Date Jan. 20, 1972 Driving Wt. 300 lbs. Elevation 46.7 ft.

Job Milpitas, L.I.D. 71-4 Drop 18 inches Work Order 23-238-70

Sample Depth ft	Blows/6 in.	Moisture Content %	Dry Unit Weight pcf	Depth in feet	Graphic Log	Description
						Occasional coarse sand (continued)
					SC GC	Clayey sand to gravel, light brown, coarse sand to fine gravel, very dense
84	50/60 for 4"	11.8	114.6			
				85		
						Termination Depth: 85 feet

CONFORMED

GEOLABS, INC.

3151

Date March 1, 1972

Job Bissell & Karn

W.O. 23-238-70

SHEAR TEST DIAGRAM

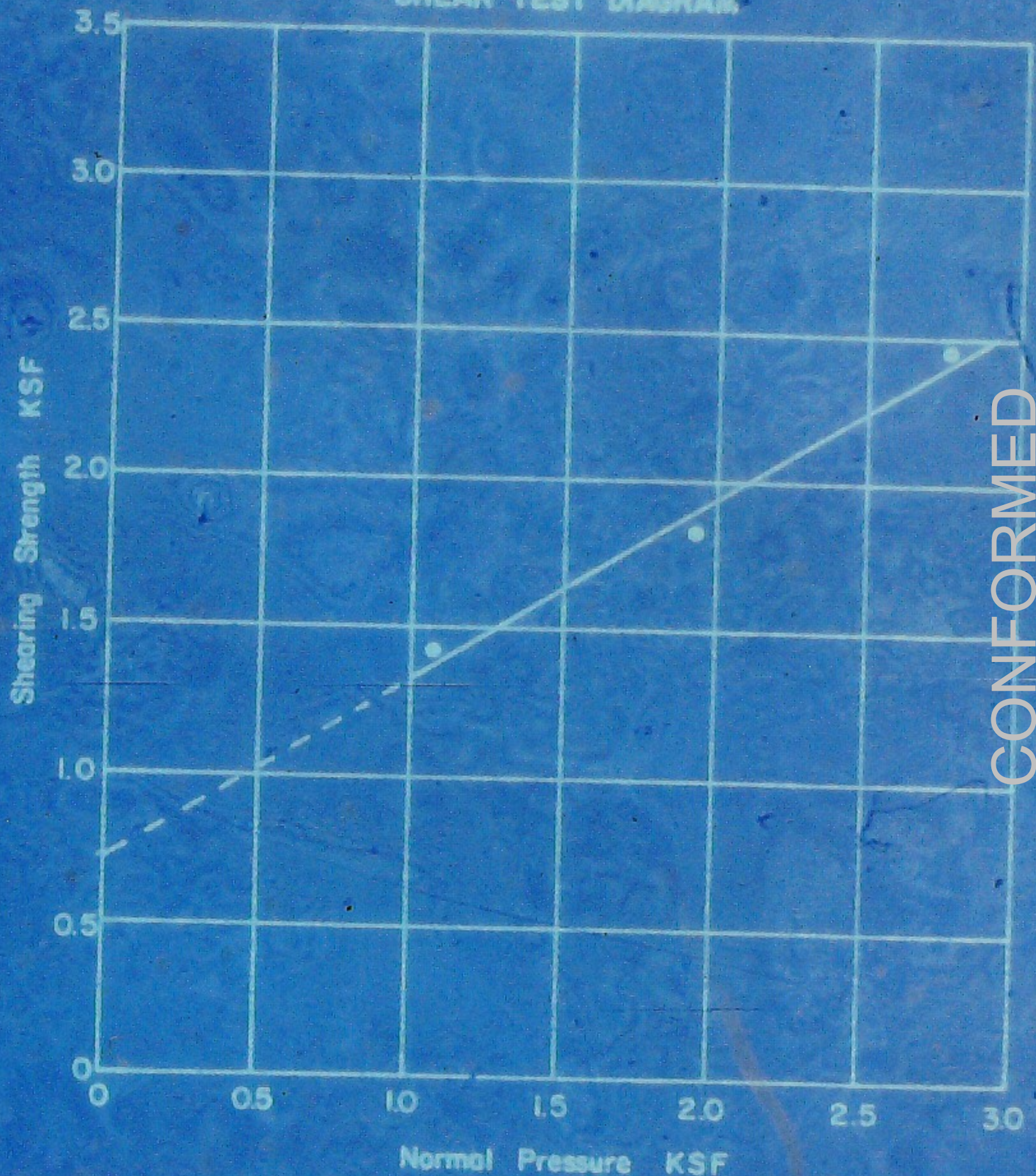

B-3 @ 43'
c = 0.7 KSF
ø = 32°

Key:

○ Tests at field moisture content.

● Tests at saturated moisture content.

PLATE 7

CONFORMED

3151

GEOLABS, INC.

Date March 1, 1972

Job Bissell & Karn

W.O. 23-238-70

SHEAR TEST DIAGRAM

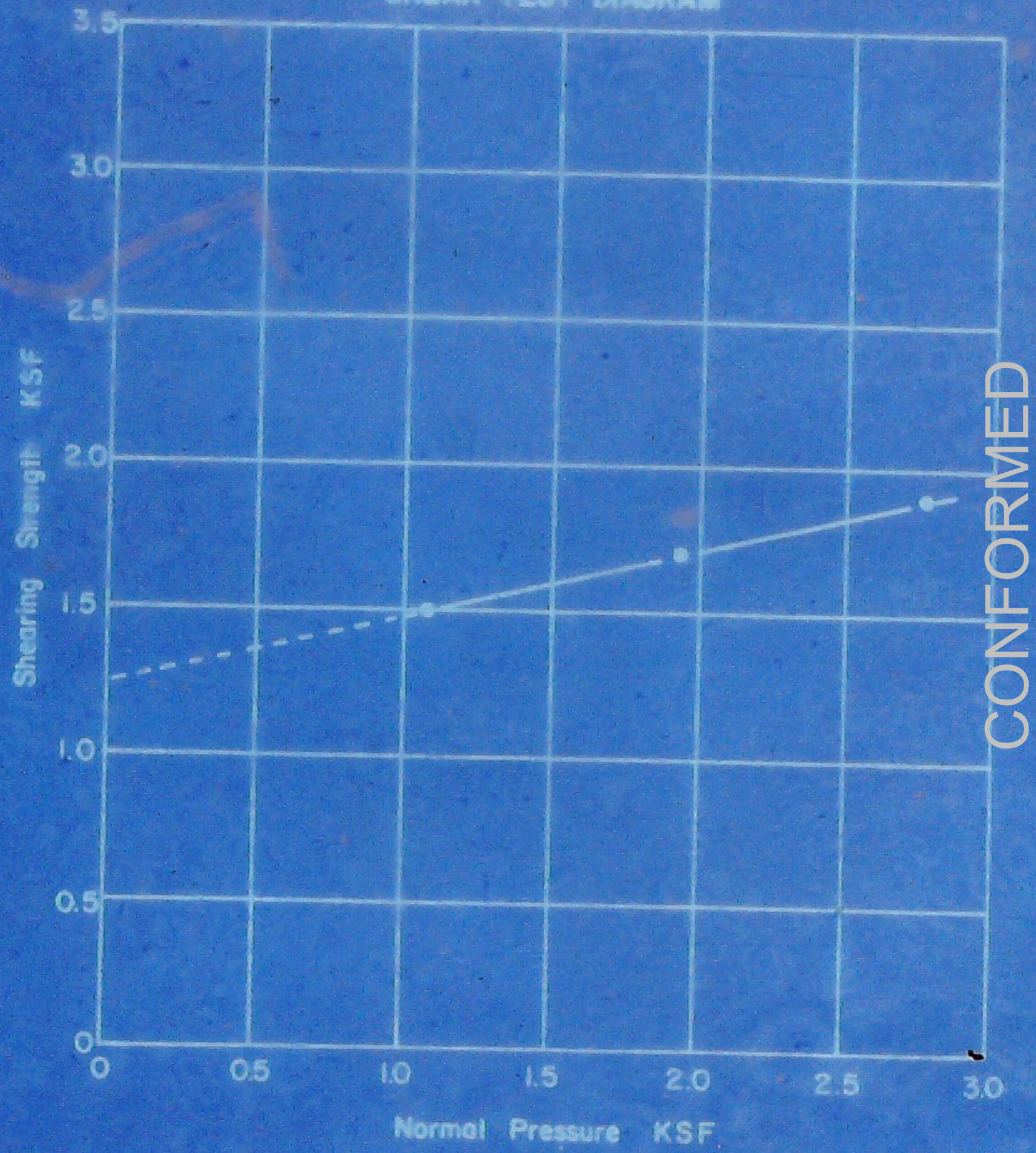

B-3 @ 53'
c = 1.25 KSF
ø = 13°

Key:

○ Tests at field moisture content.

● Tests at saturated moisture content.

CONFORMED

PLATE 8

GEOLABS, INC.

! 3151

Date March 1, 1972

Job Bissell & Kern

W.O. 23-238-70

SHEAR TEST DIAGRAM

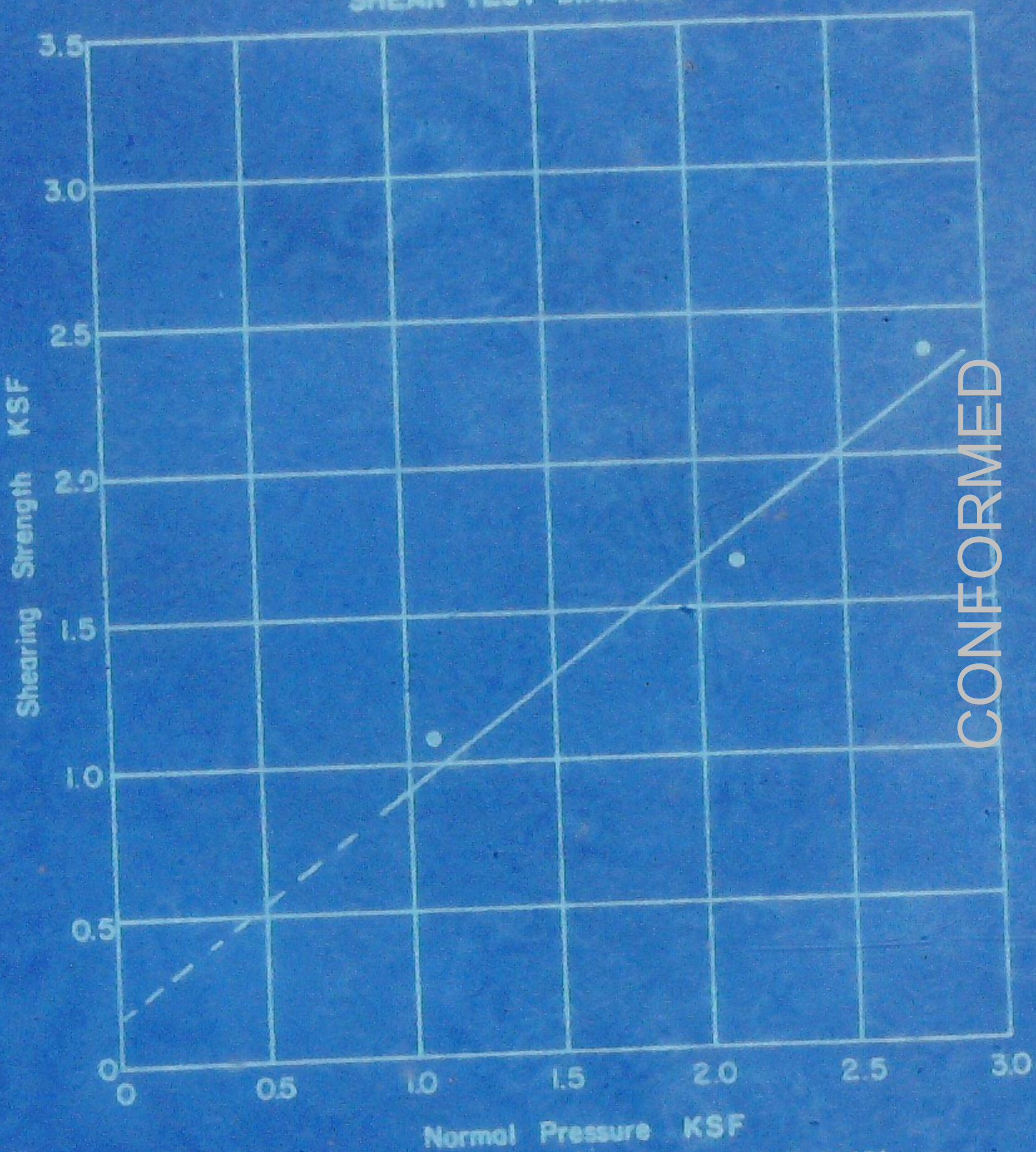

B-3 @ 63'
c = 0.15 KSF
ϕ = 37°

Key:

○ Tests at field moisture content.

● Tests at saturated moisture content.

PLATE 9

CONFORMED

GEOLABS, INC.

3151

Date March 1, 1972

Job Bissell & Karn

W.O. 23-238-70

SHEAR TEST DIAGRAM

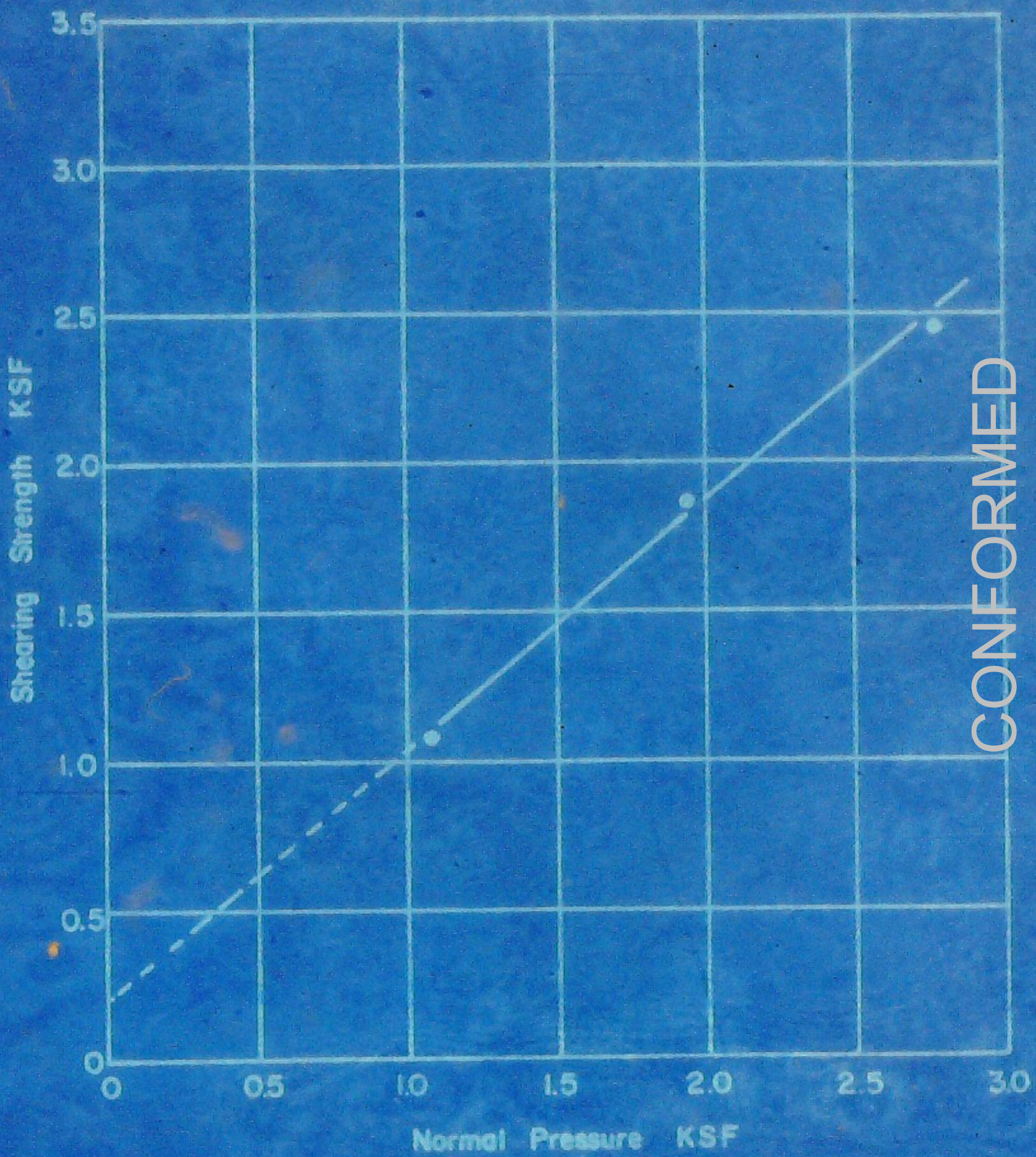

B-4 @ 44'
c = 0.2 KSF
ø = 40°

Key:

○ Tests at field moisture content.

● Tests at saturated moisture content.

CONFORMED

GEOLABS, INC.

3151

Date March 1, 1972

Job Bissell & Karn

W.O. 23-238-70

SHEAR TEST DIAGRAM

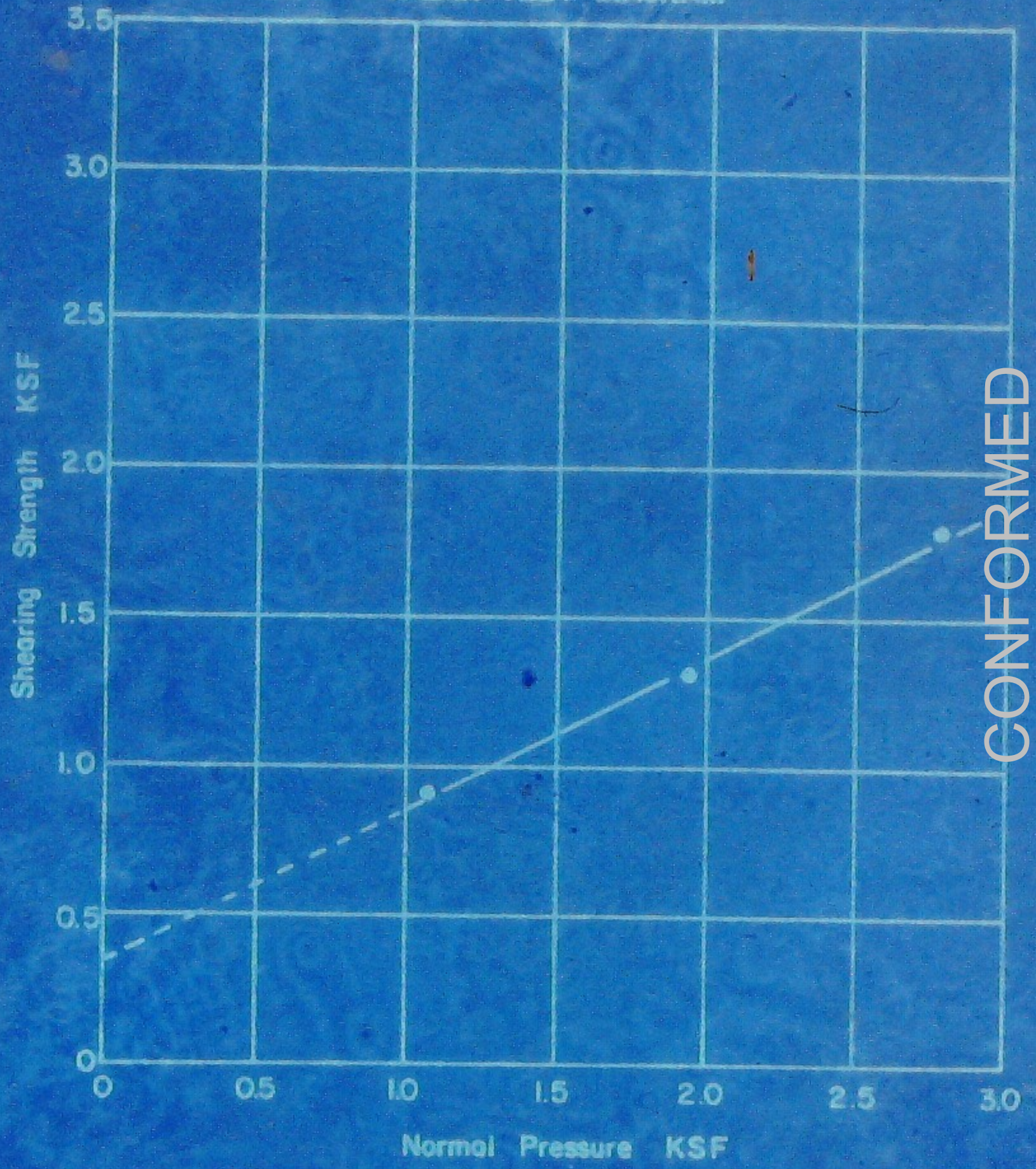

B-4 @ 49'
c = 0.35 KSF
ϕ = 27°

Key:

○ Tests at field moisture content.

● Tests at saturated moisture content.

CONFORMED

PLATE 11

GEOLABS, INC.

3151

Date March 1, 1972

Job Bissell & Karn

W.O. 23-238-70 Q

SHEAR TEST DIAGRAM

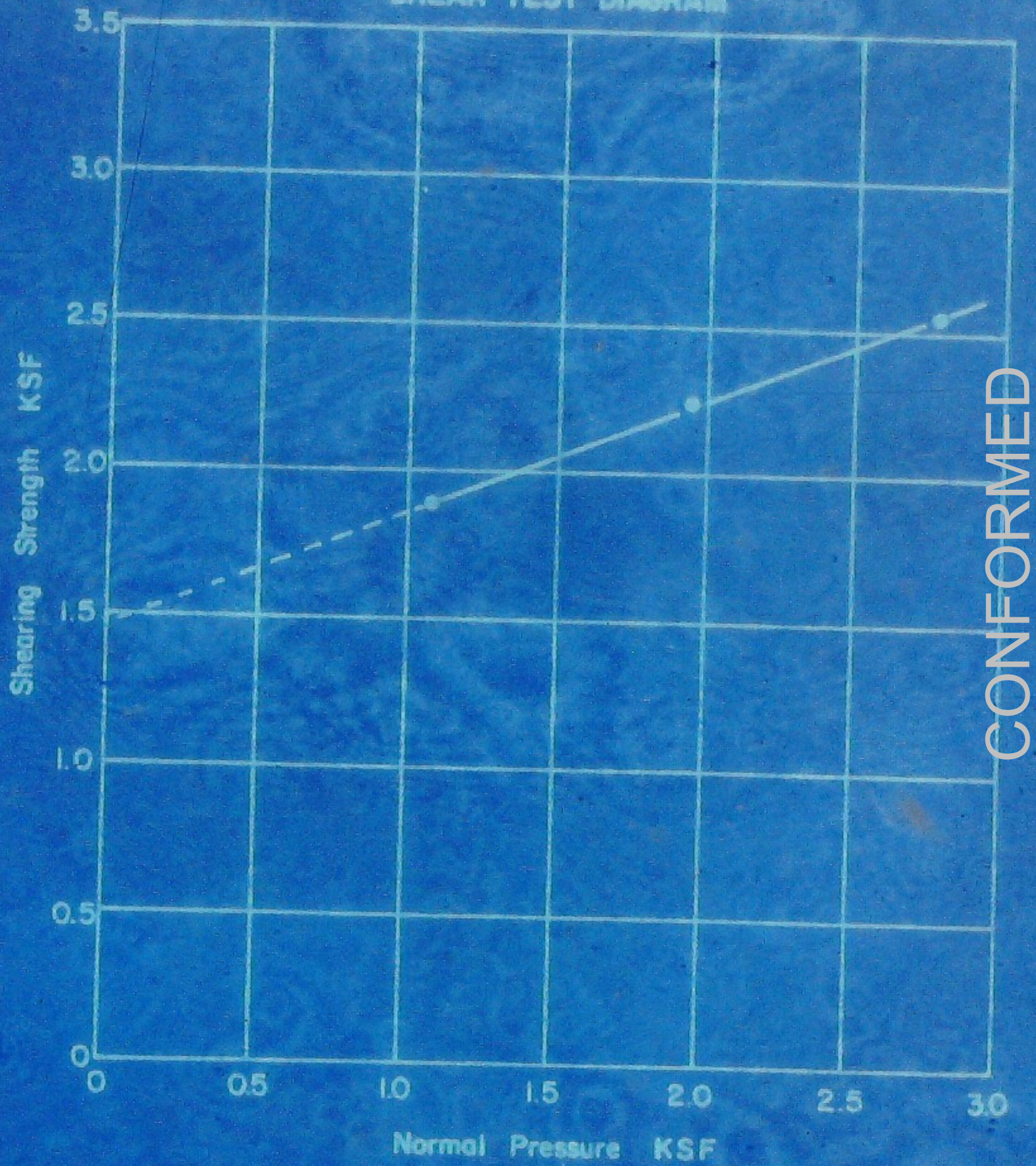

B-4 @ 54'
c = 1.45 KSF
ø = 21.5°

Key:

○ Tests at field moisture content.

● Tests at saturated moisture content.

CONFORMED

PLATE 12

GEOLABS, INC. 3151

Date March 1, 1972

Job Bissell & Karn W.O. 23-238-70

SHEAR TEST DIAGRAM

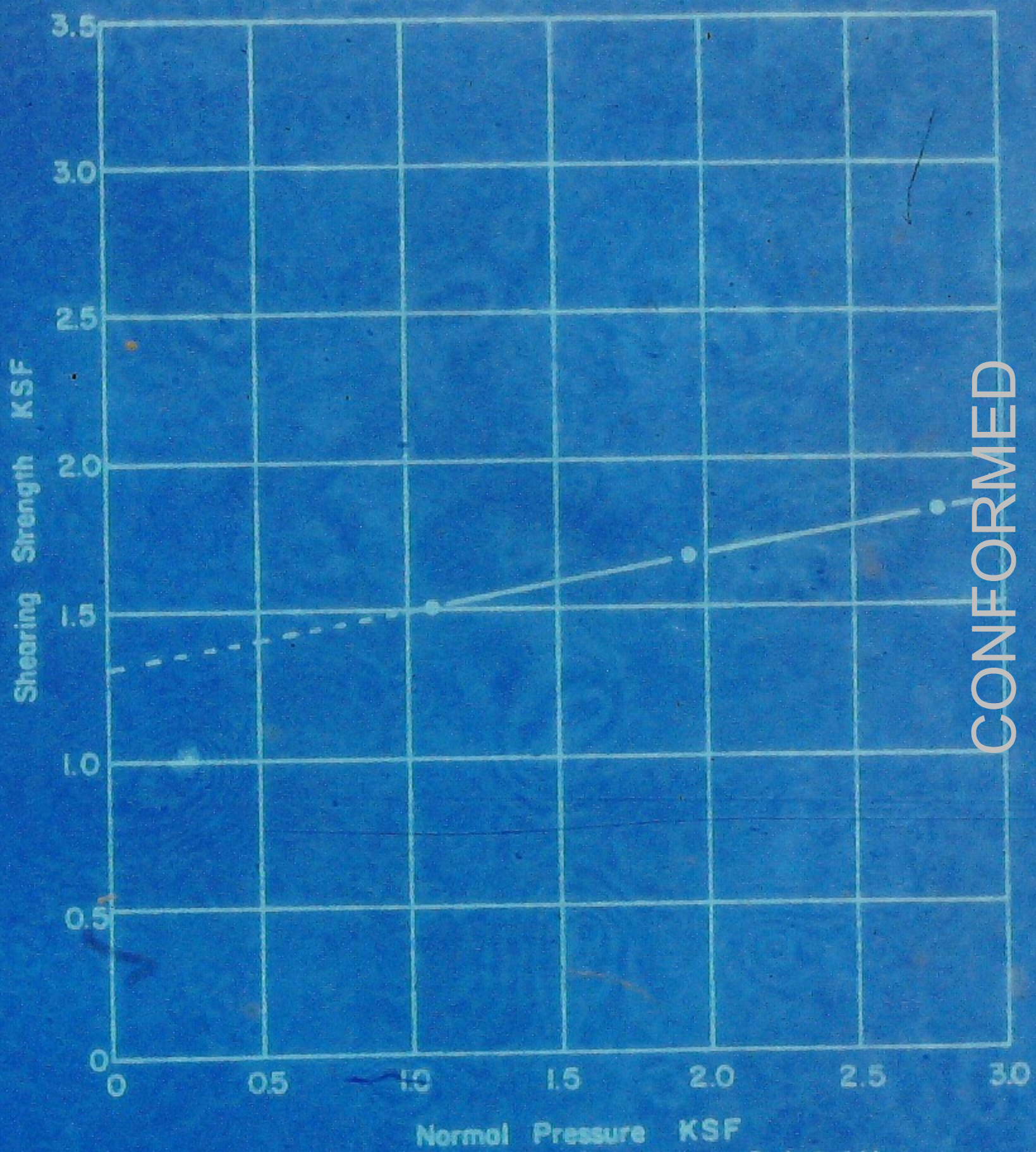

B-4 @ 64'
c = 1.3 KSF
ø = 10°

Key:

○ Tests at field moisture content.

● Tests at saturated moisture content.

CONFORMED

GEOLABS, INC.

3151

Date March 1, 1972

Job Bissell & Karn W.O. 23-238-70

SHEAR TEST DIAGRAM

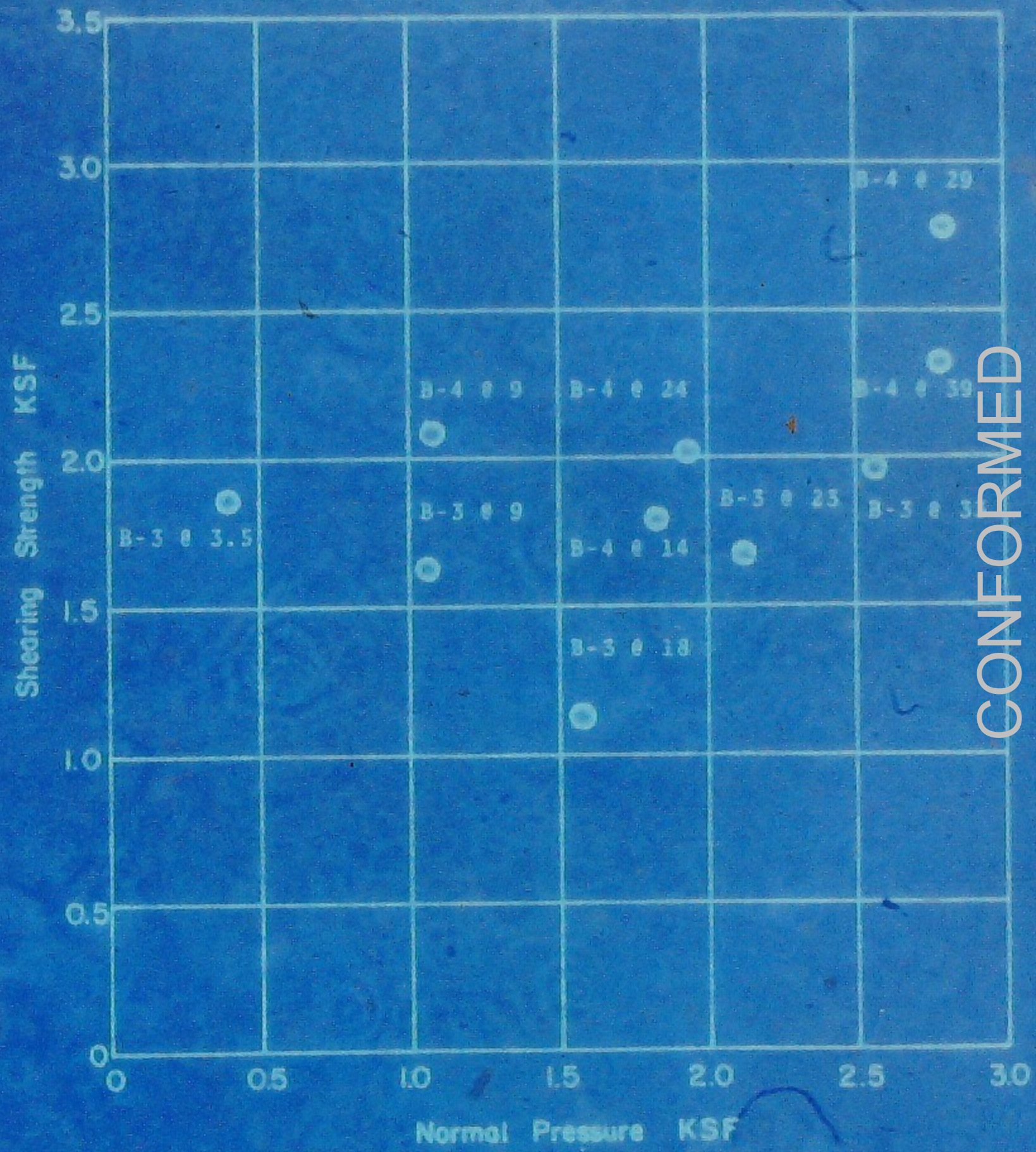

Key:

○ Tests at field moisture content.

● Tests at saturated moisture content.

CONFORMED

3151

GEOLABS INC.

DATE March 1, 1972

JOB Bissell & Karn

W.O. 23-238-70

BORING NO. 3

DEPTH 68 ft.

CONSOLIDATION - PRESSURE CURVE

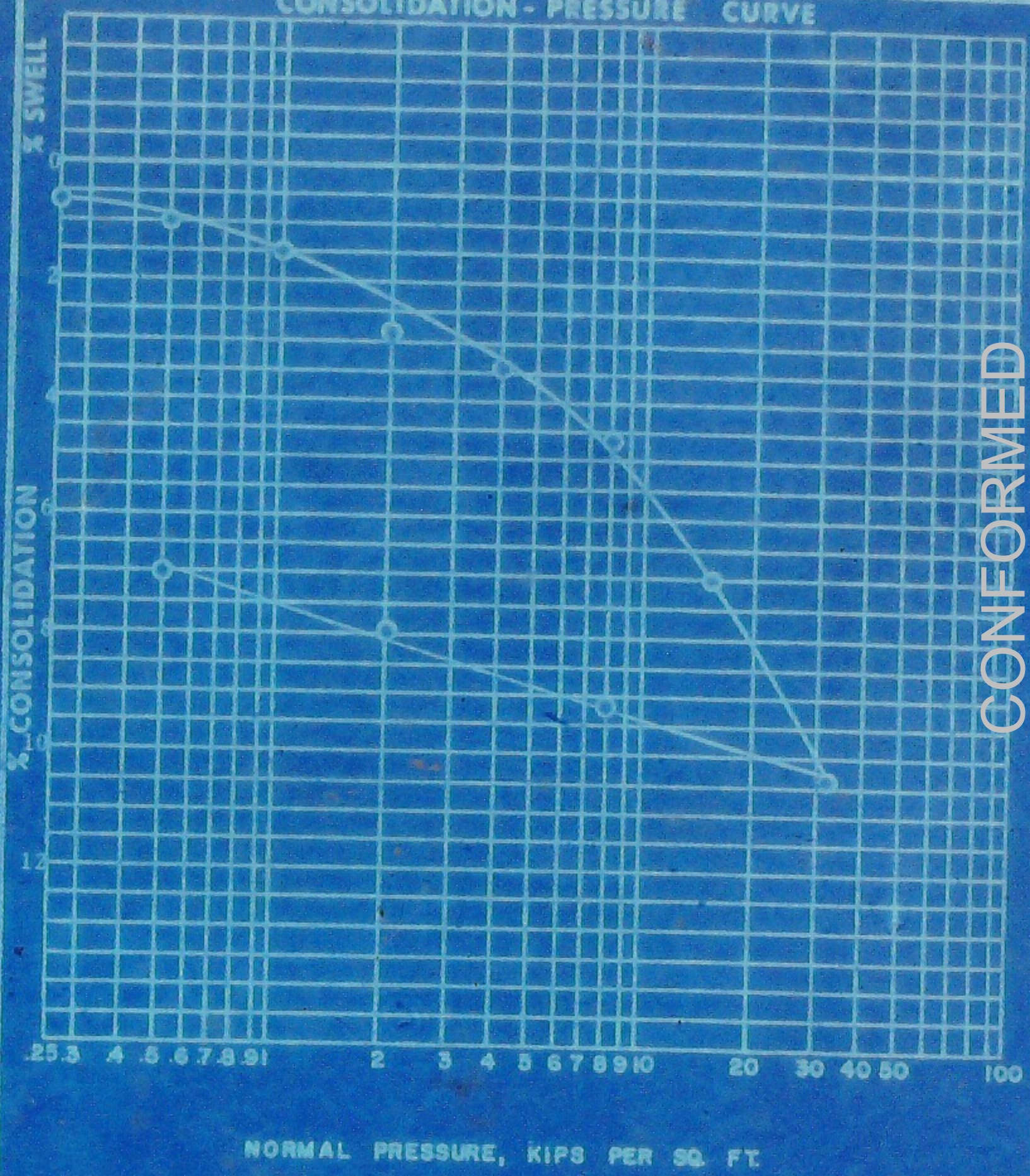

CONFORMED

PLATE 15

3151

GEOLABS INC.

DATE March 1, 1972

JOB Bianchi & Kern

W.O. 23-238-70

BORING NO. 4

DEPTH 69 ft.

CONSOLIDATION - PRESSURE CURVE

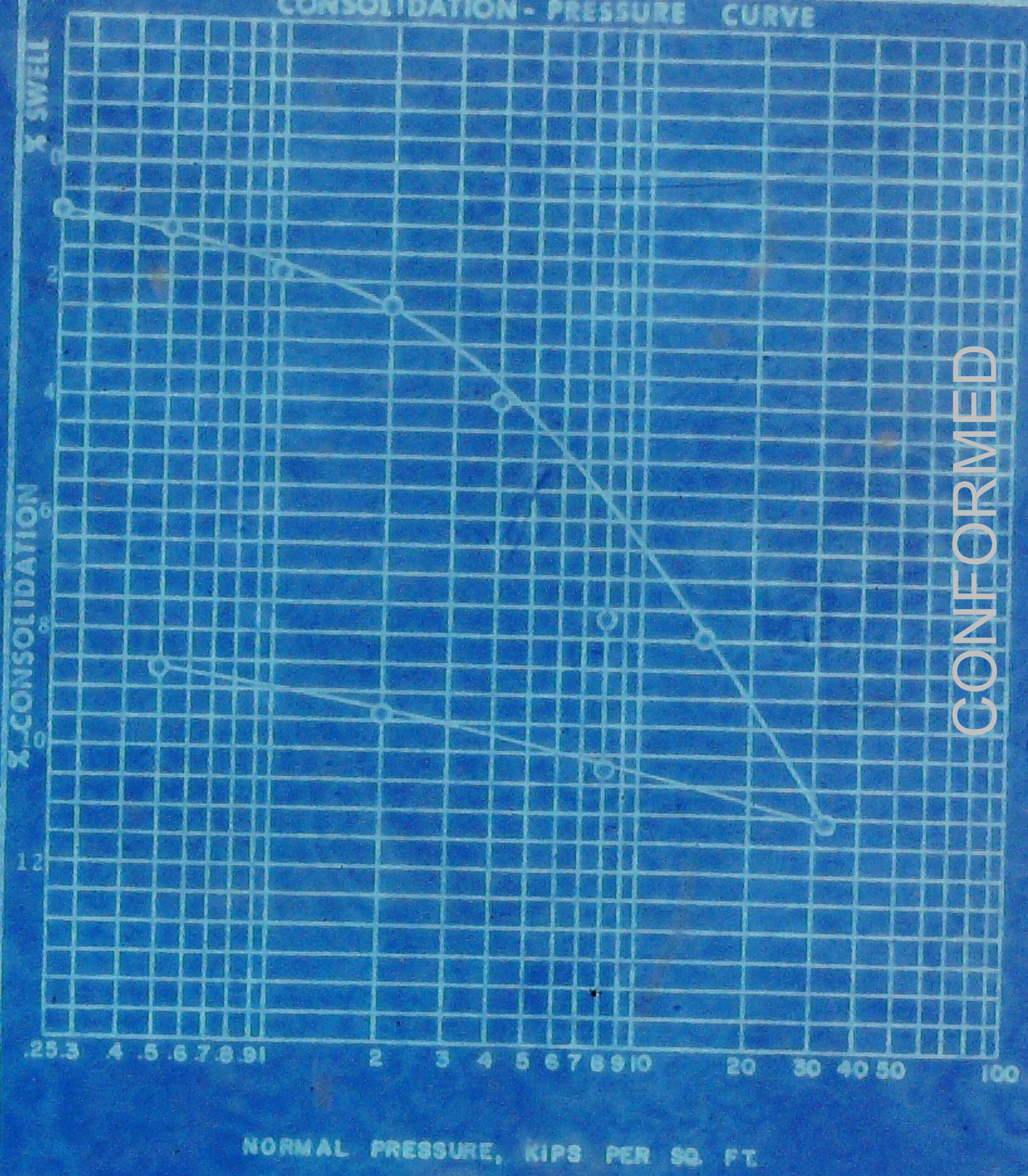

CONFORMED

PLATE 16

PLASTICITY CHART

3151

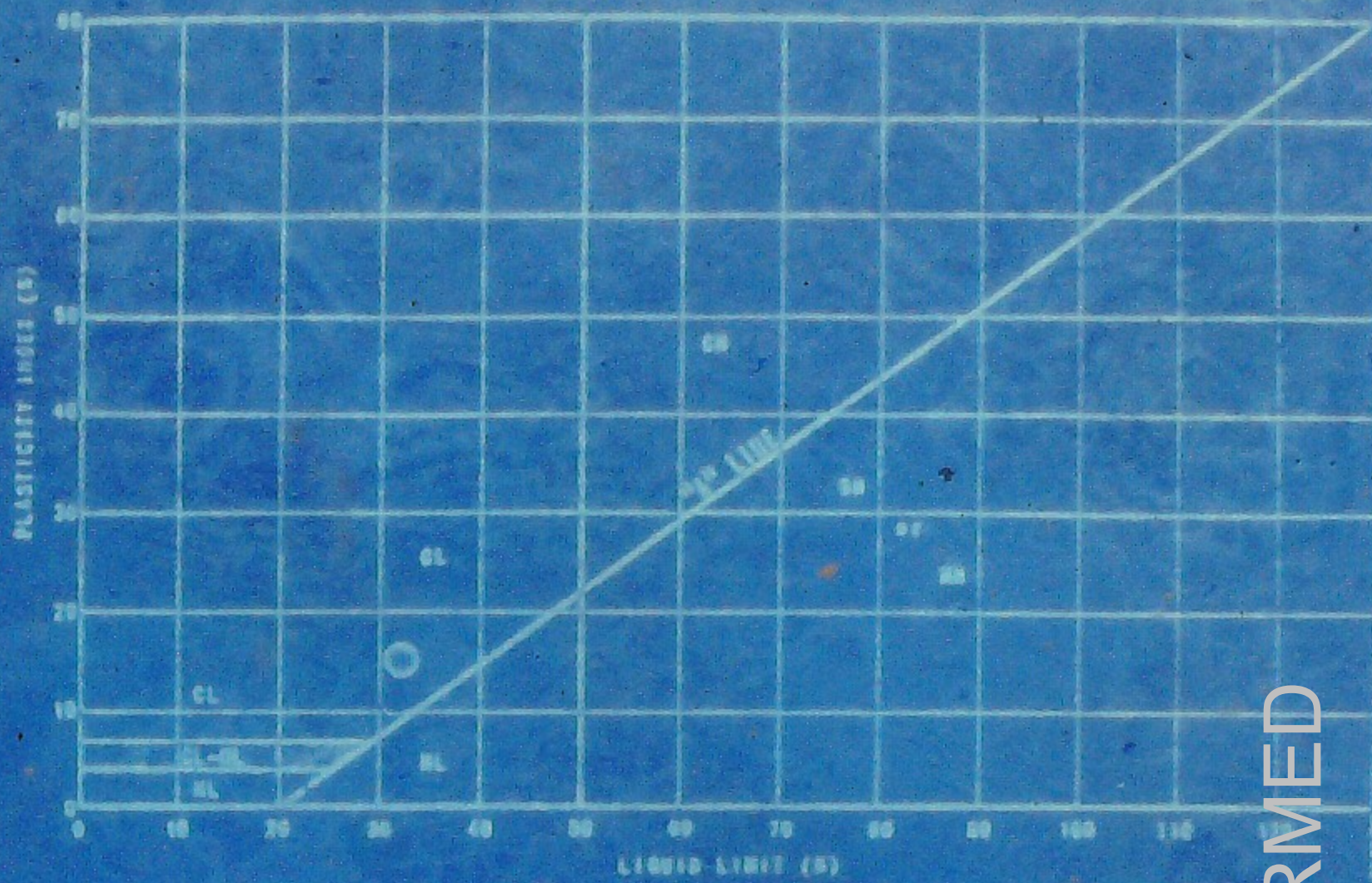

PLASTICITY DATA

KEY SYMBOL	HOLE NUMBER	DEPTH (feet)	NATURAL WATER CONTENT W (%)	PLASTIC LIMIT (%)	LIQUID LIMIT (%)	PLASTICITY INDEX (%)	LIQUIDITY INDEX $\left(\frac{W-P}{L-P}\right)$	UNIFIED SOIL CLASSIFICATION SYMBOL
●	B-4	59'		17.4	32.7	15.3		CL

GEOLABS, INC.
GEOLOGY AND SOIL ENGINEERING

DATE 3-7-77 BY RTG
SCALE ——— NO. 23-238-70

PLATE

CONFORMED

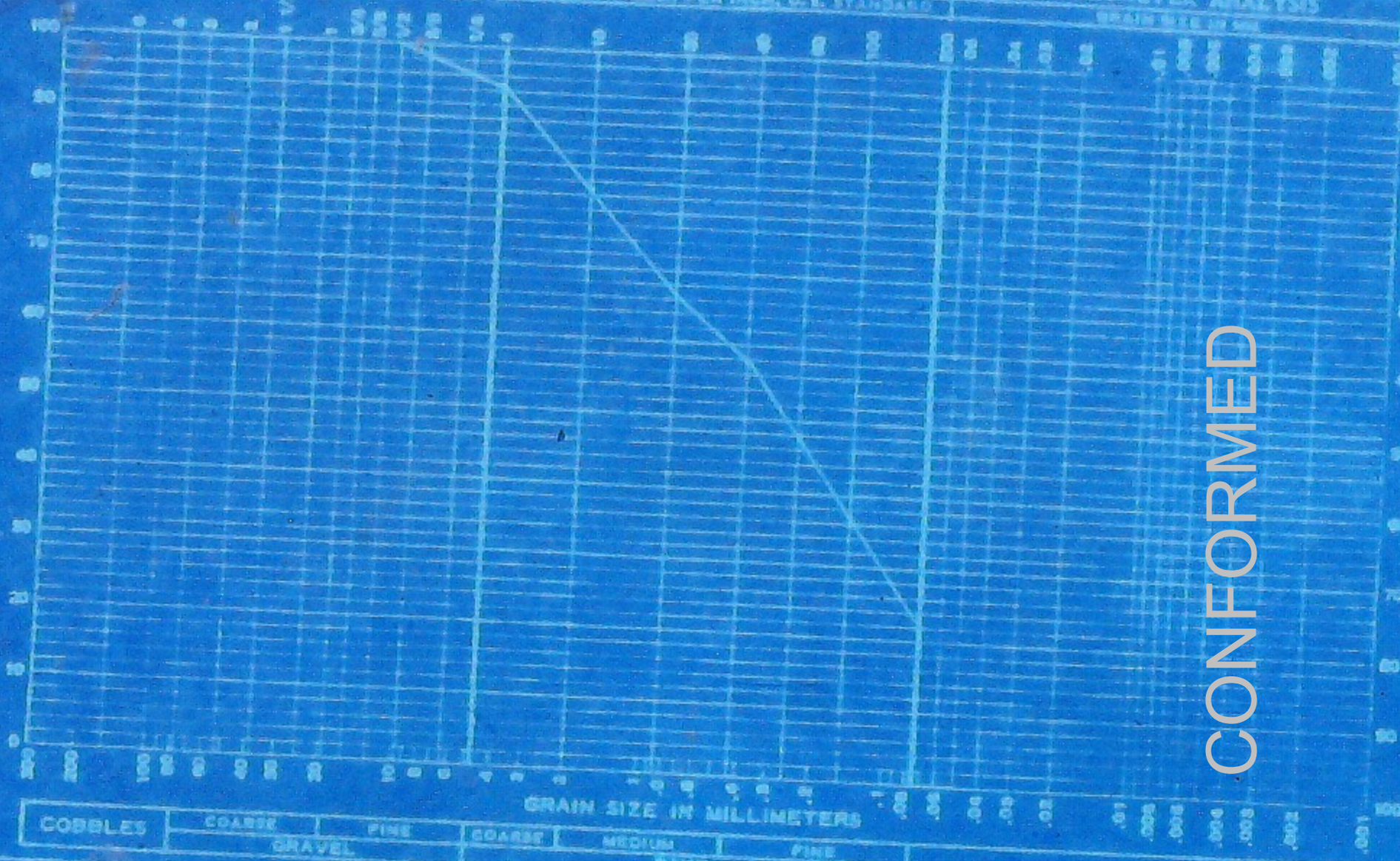

SAMPLE NO.	DEPTH -FT.	U.S.C.	CLASSIFICATION	NAT. W.C. %	LL	PL	PI
B-1	38	CL					

GRAIN SIZE CLASSIFICATION

GEOLABS-CALIFORNIA, INC.

3151

CONFORMED

PLATE 18

Job No. 15-138-70
File No. T6128-11
Lab. No. 11770
February 22, 1972

3151

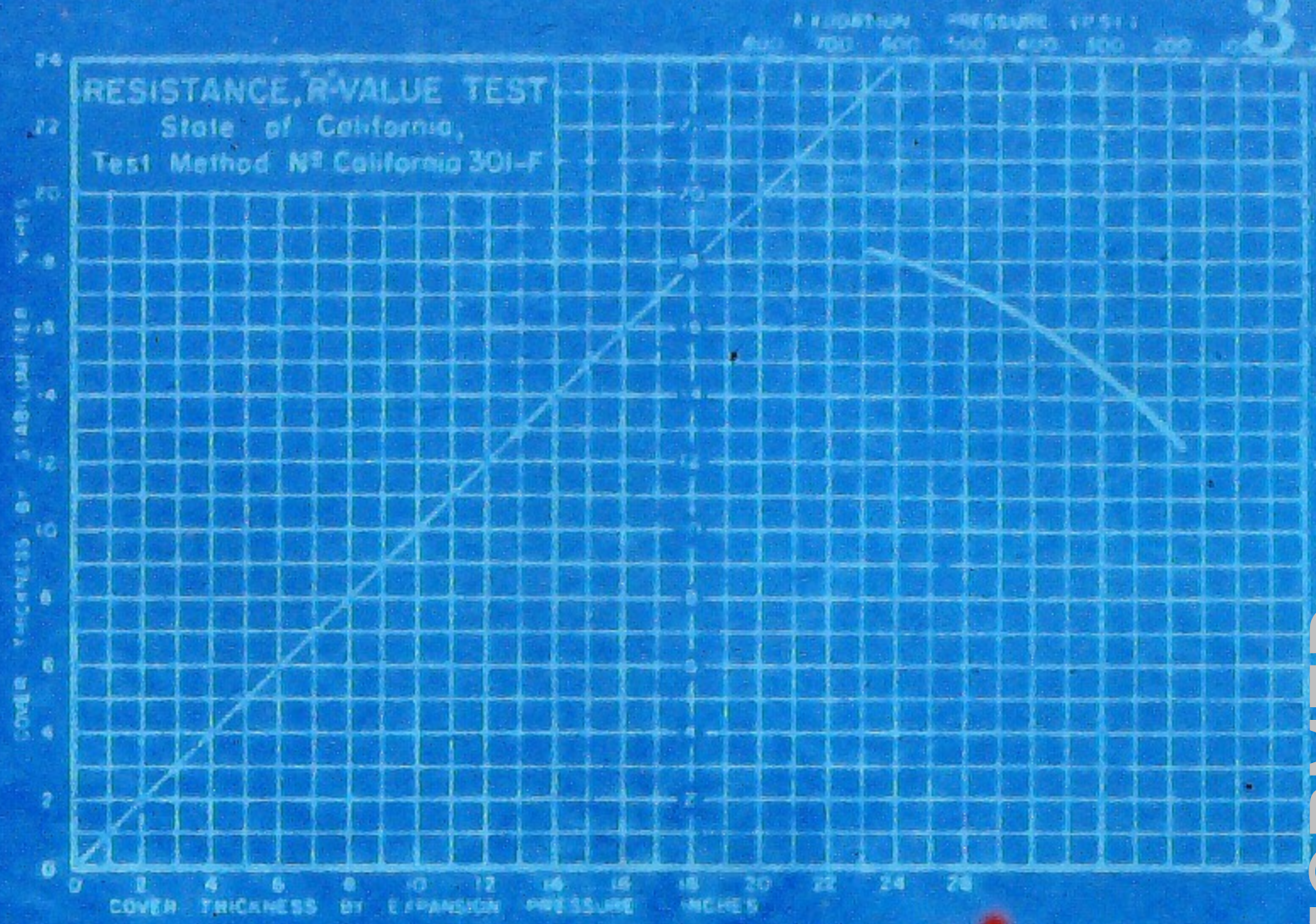

Sample: Pt I @ 0' to 2'

Description: Lt. Brwn. Sandy Silt

Specimen	A	B	C
Exudation Pressure, p.s.i.	223	350	597
Expansion dial (.0001")	13	20	28
Expansion Pressure, p.s.f.	56	87	121
Resistance Value, "R"	48	57	70
% Moisture at Test	11.3	10.9	10.4
Dry Density at Test, p.c.f.	120.9	122.2	123.2
"R" Value at 300 p.s.i. Exudation Pressure	= (54)		

CONFORMED

Lab. No. 11706
February 4, 1972
Job No. 23-238-70

3151

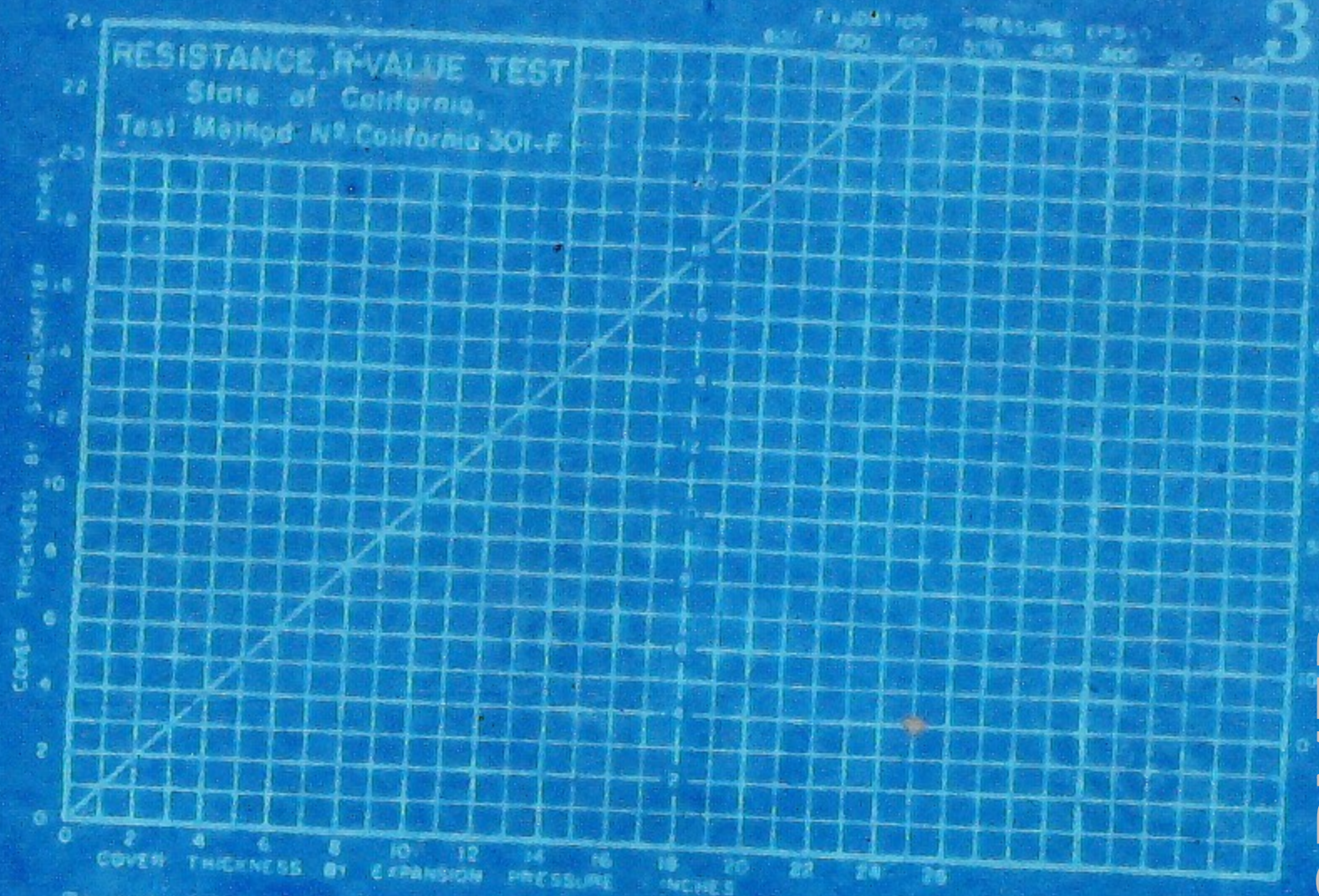

Sample: Pt. II at 2.5' to 3.0'

Description: Dark brown clay.

Specimen	A	B	C
Exudation Pressure,p.s.i.			
Expansion dial (.0001")			
Expansion Pressure,p.s.f.			
Resistance Value, "R"			
% Moisture at Test			
Dry Density at Test,p.c.f.			
"R" Value at 300 p.s.i. Exudation Pressure	= (*) Less than 5.		

*Sample extruded from beneath mold at 621 p.s.i. with one light lit.

CONFORMED

Job No. 73-238-78
File No. 73328-41
Lab. No. 11779
February 22, 1972

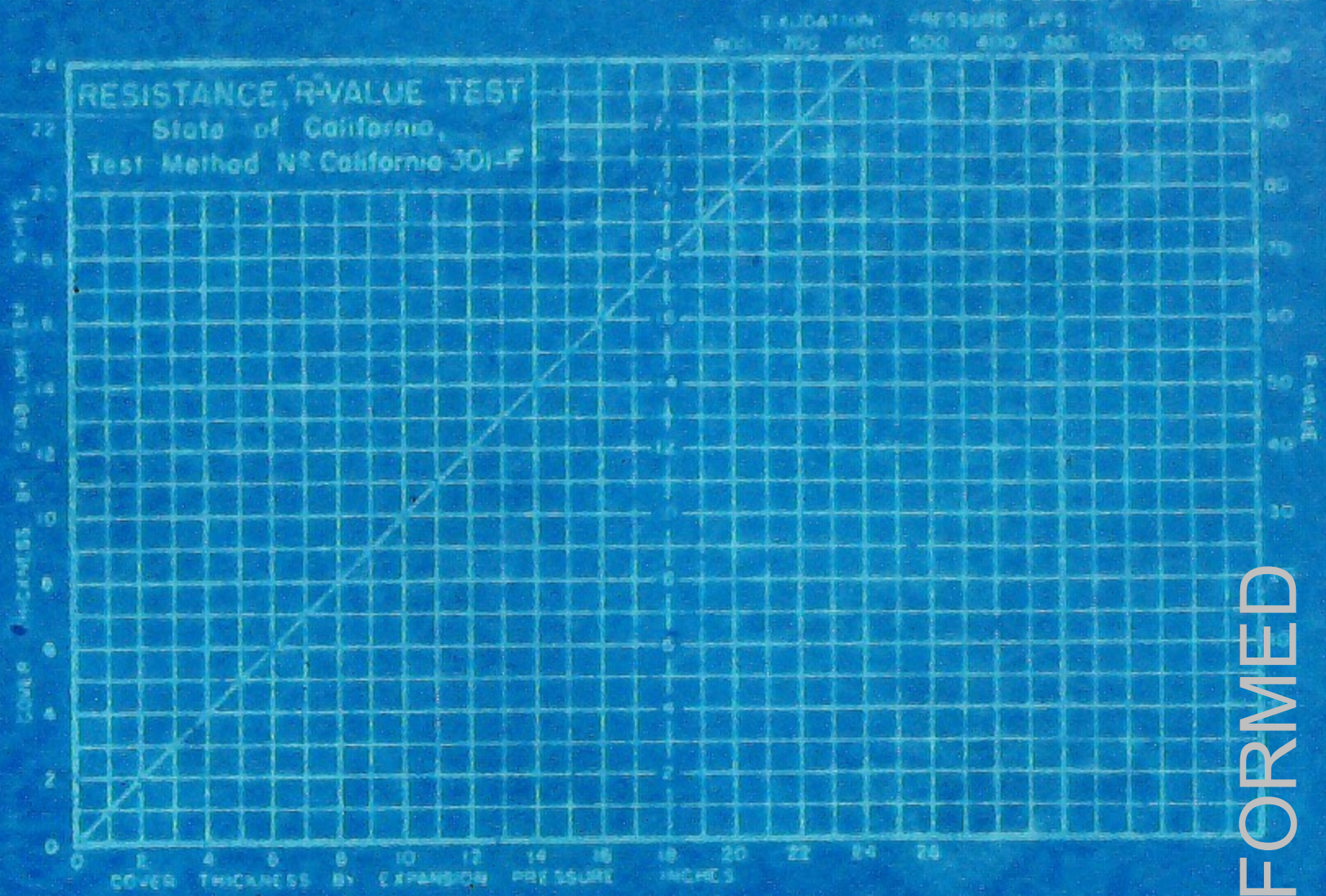

Sample: Pt IV @ 3' to 4'

Description: Tan mottled silty-clay

Specimen	A	B	C
Exudation Pressure, p.s.i			
Expansion dial (.0001")			
Expansion Pressure, p.s.f.			
Resistance Value, "R"			
% Moisture at Test			
Dry Density at Test, p.c.f.			
"R" Value at 300 p.s.i. Exudation Pressure	= (*) less than 5		

*NOTE: Sample extruded from mold @ 7,000 lb. load with no lights

CONFORMED

File No. 68328-H
Lab. No. 11706
February 4, 1972
Job No. 23-238-70

3151

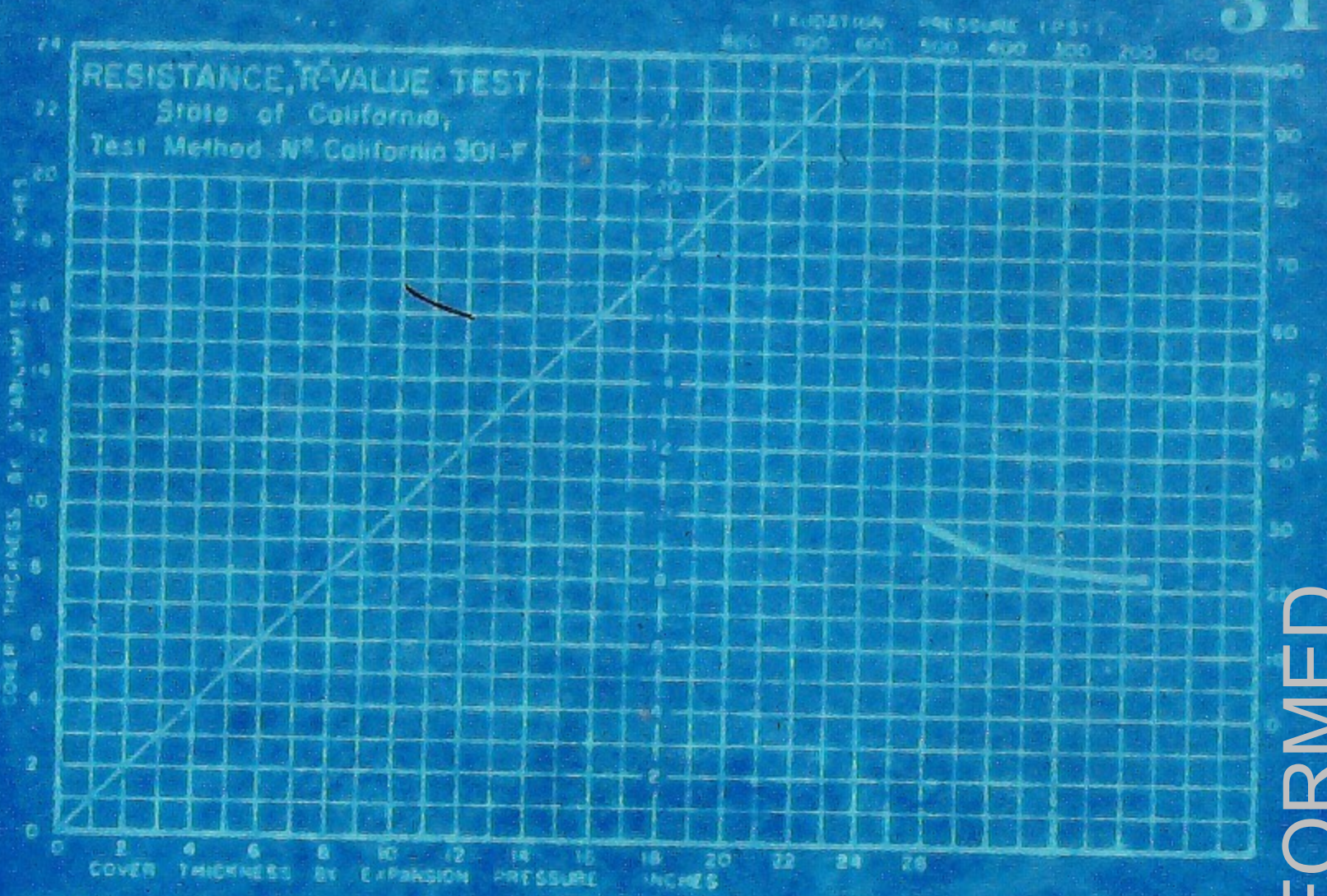

Sample: Pt. VI at 3' to 4'

Description: Tan silty clay.

Specimen	A	B	C
Exudation Pressure p.s.i.	255	350	470
Expansion dial (.0001")	35	40	50
Expansion Pressure p.s.f.	151	173	216
Resistance Value, "R"	22	24	28
% Moisture at Test	21.9	21.0	20.1
Dry Density at Test p.c.f.	104.0	104.8	106.3
"R" Value at 300 p.s.i. Exudation Pressure	= (23)		

CONFORMED

Lab. No. 11708
February 4, 1972
Job No. 23-238-70

3151

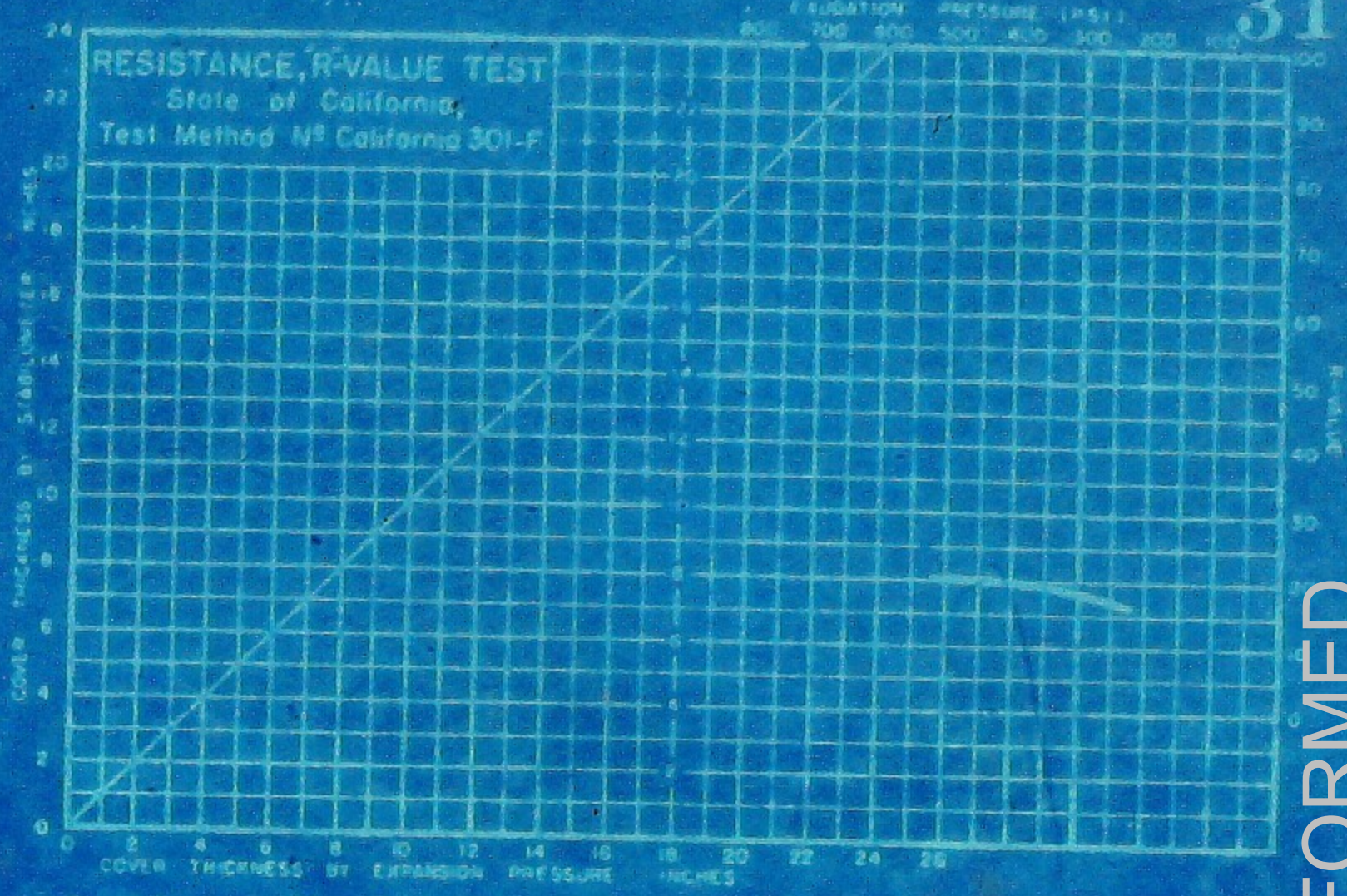

Sample: Pt. VIII at 3' to 4'

Description: Tan silty clay.

Specimen	A	B	C
Exudation Pressure, p.s.i.	271	310	462
Expansion dial (.0001")	0	10	15
Expansion Pressure, p.s.f.	0	43	66
Resistance Value, "R"	18	19	20
% Moisture at Test	20.2	19.4	18.5
Dry Density at Test, p.c.f.	102.5	105.7	107.0
"R" Value at 300 p.s.i. Exudation Pressure	= (19)		

CONFORMED

File No. 14,248-M1
Lab. No. 11708
February 4, 1972
Job No. 23-238-70

3151

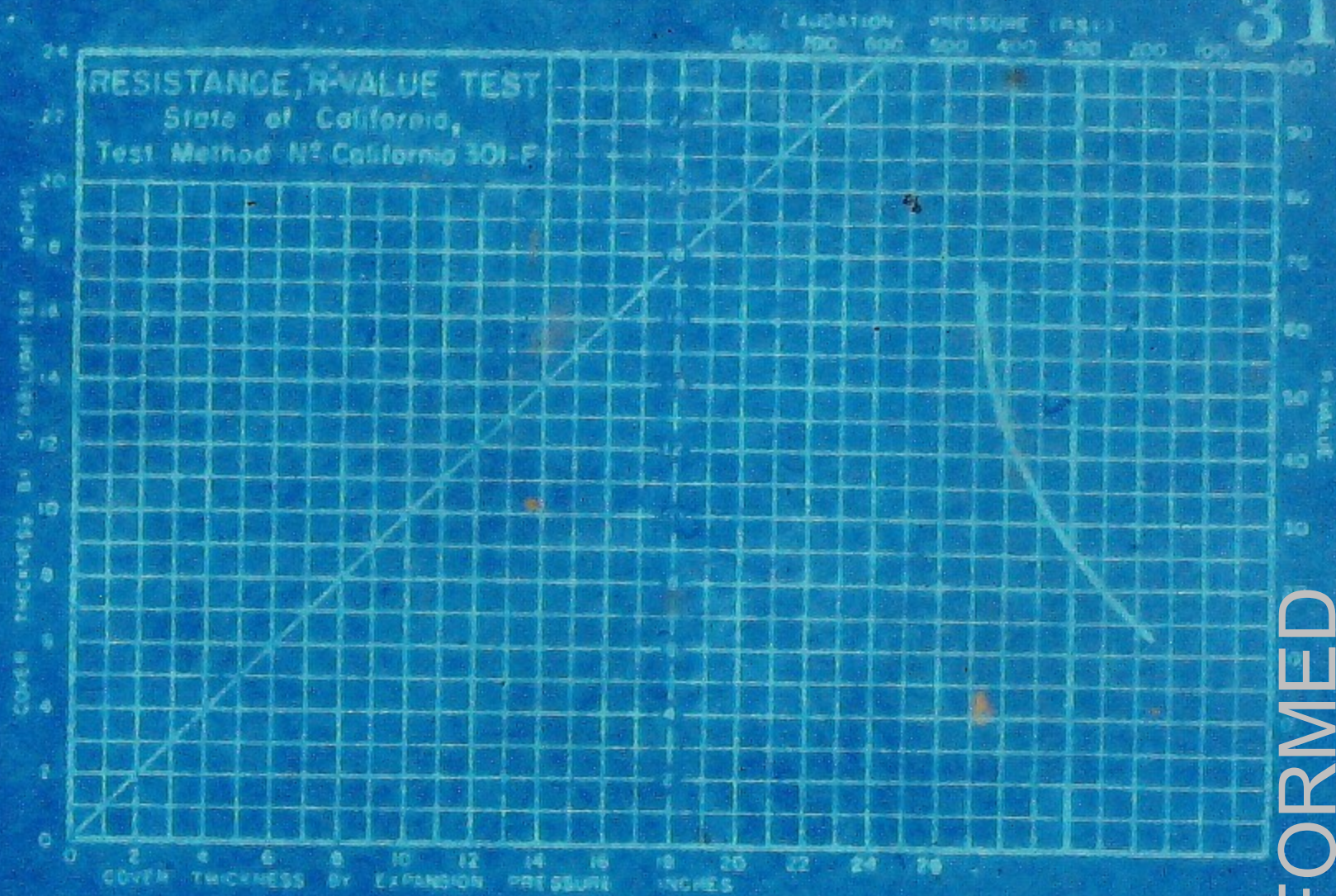

Sample: FT X at 3.0' to 3.5'

Description: Tan silty clay.

Specimen	A	B	C
Exudation Pressure,p.s.i.	199	358	446
Expansion dial (.0001")	0	10	30
Expansion Pressure,p.s.f.	0	43	130
Resistance Value, "R"	14	36	59
% Moisture at Test	17.7	15.5	14.2
Dry Density at Test,p.c.f.	109.3	112.2	116.0
"R" Value at 300 p.s.i. Exudation Pressure	= (27)		

CONFORMED

File No. [illegible]
Lab. No. 11708
February 4, 1972
Job No. 23-238-70

3151

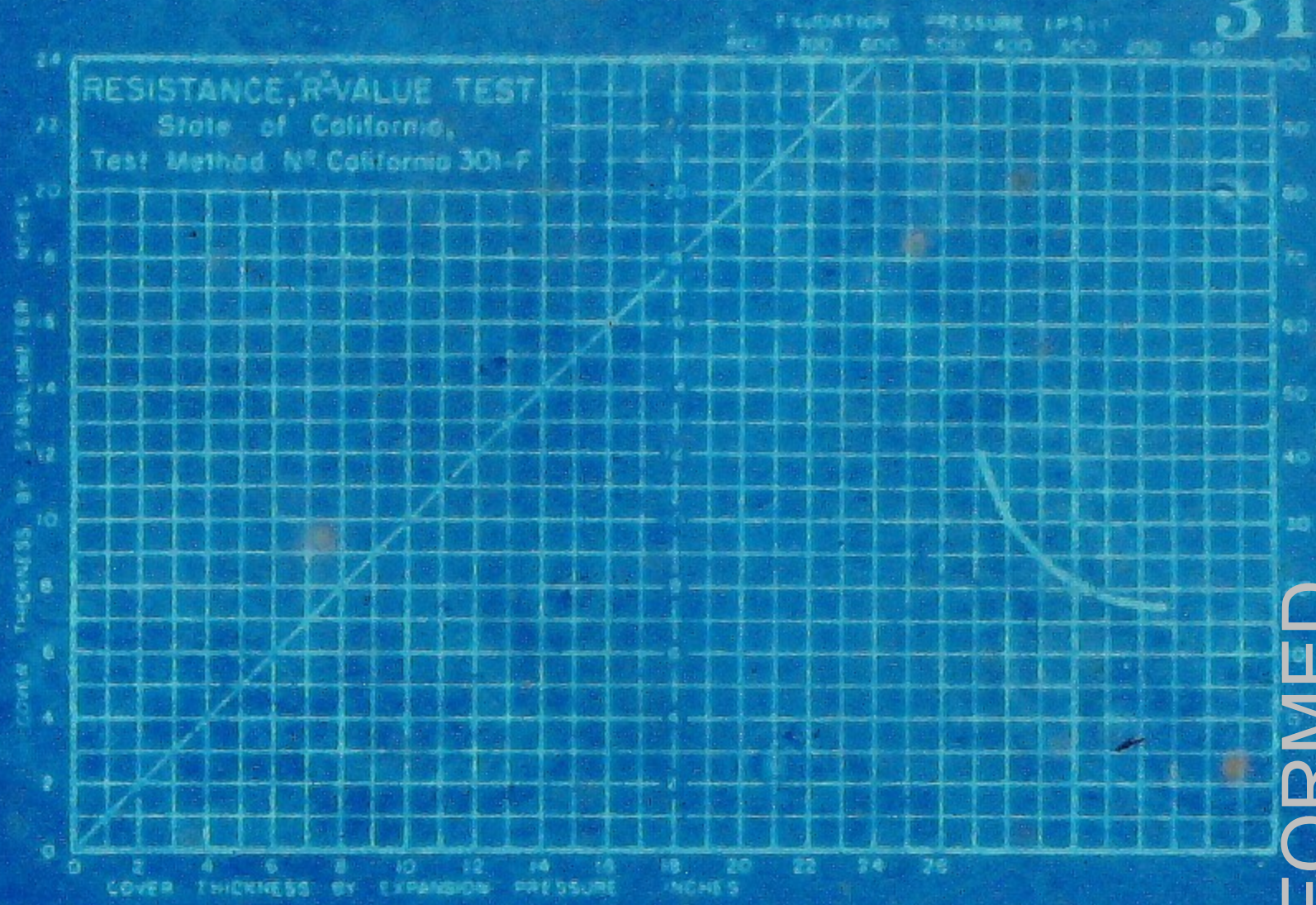

Sample: Pt. XII at 3.0' to 3.5'

Description: Brown silty clay with some gravel.

Specimen	A	B	C
Exudation Pressure p.s.i.	191	302	438
Expansion dial (.0001")	0	3	7
Expansion Pressure p.s.i.	0	13	30
Resistance Value, "R"	18	21	37
% Moisture at Test	15.9	15.1	14.2
Dry Density at Test p.c.f.	113.0	113.2	116.9
"R" Value at 300 p.s.i. Exudation Pressure	= (21)		

CONFORMED

File No. 78328-ML
Lab. No. 11706
February 4, 1972
Job No. 23-233-70

3151

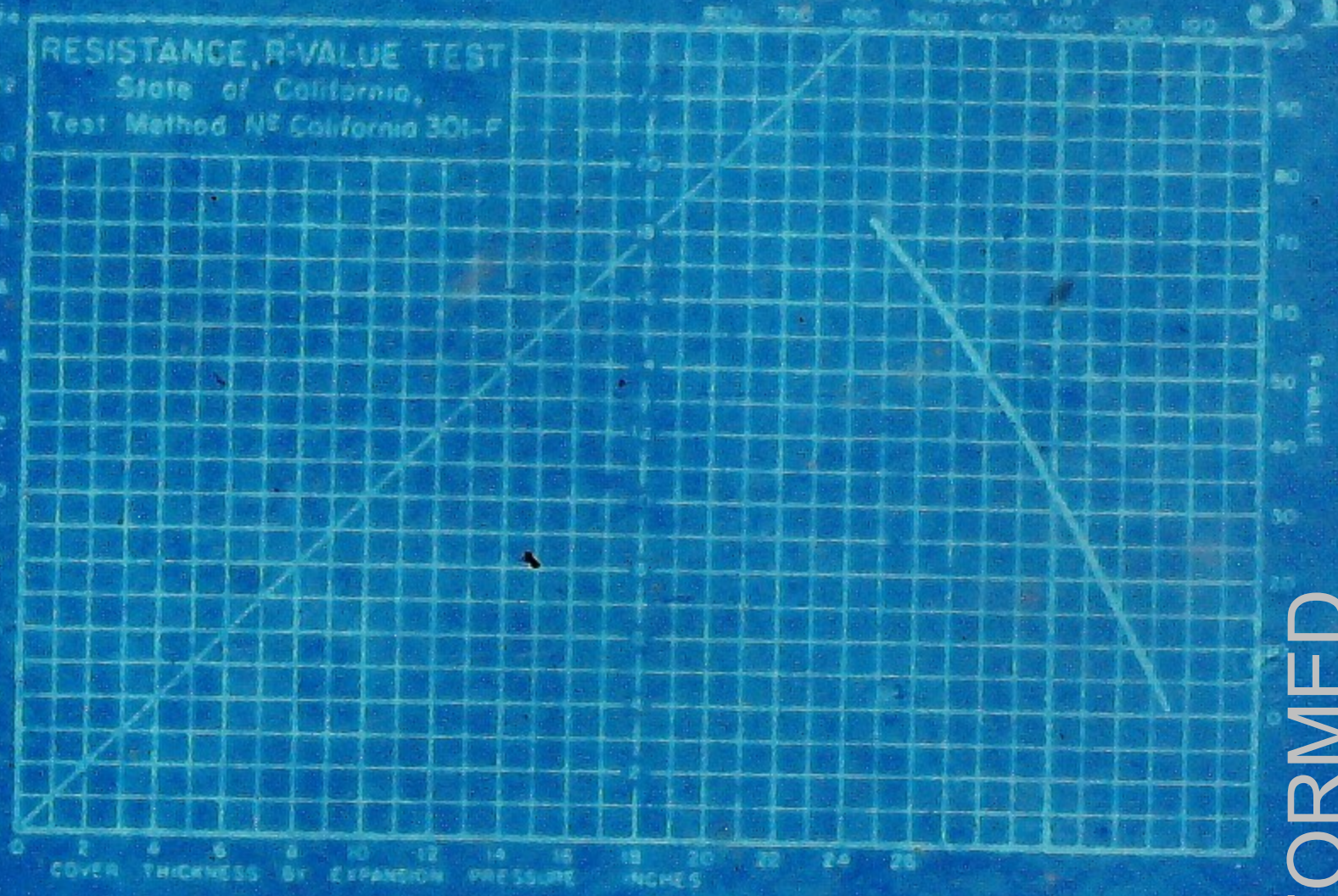

Sample: Pt. XIII at 3.0' to 5.0'

Description: Tan silty clay with some gravel.

Specimen	A	B	C
Exudation Pressure, p.s.i.	159	319	542
Expansion dial (.0001")	0	4	10
Expansion Pressure, p.s.f.	0	17	43
Resistance Value, "R"	8	37	69
% Moisture at Test	13.2	11.5	10.7
Dry Density at Test, p.c.f.	119.0	123.0	126.0
"R" Value at 300 p.s.i. Exudation Pressure	= (34)		

CONFORMED

File No. T8326-M1
Lab. No. 11706
February 4, 1972
Job No. 23-118-70

3151

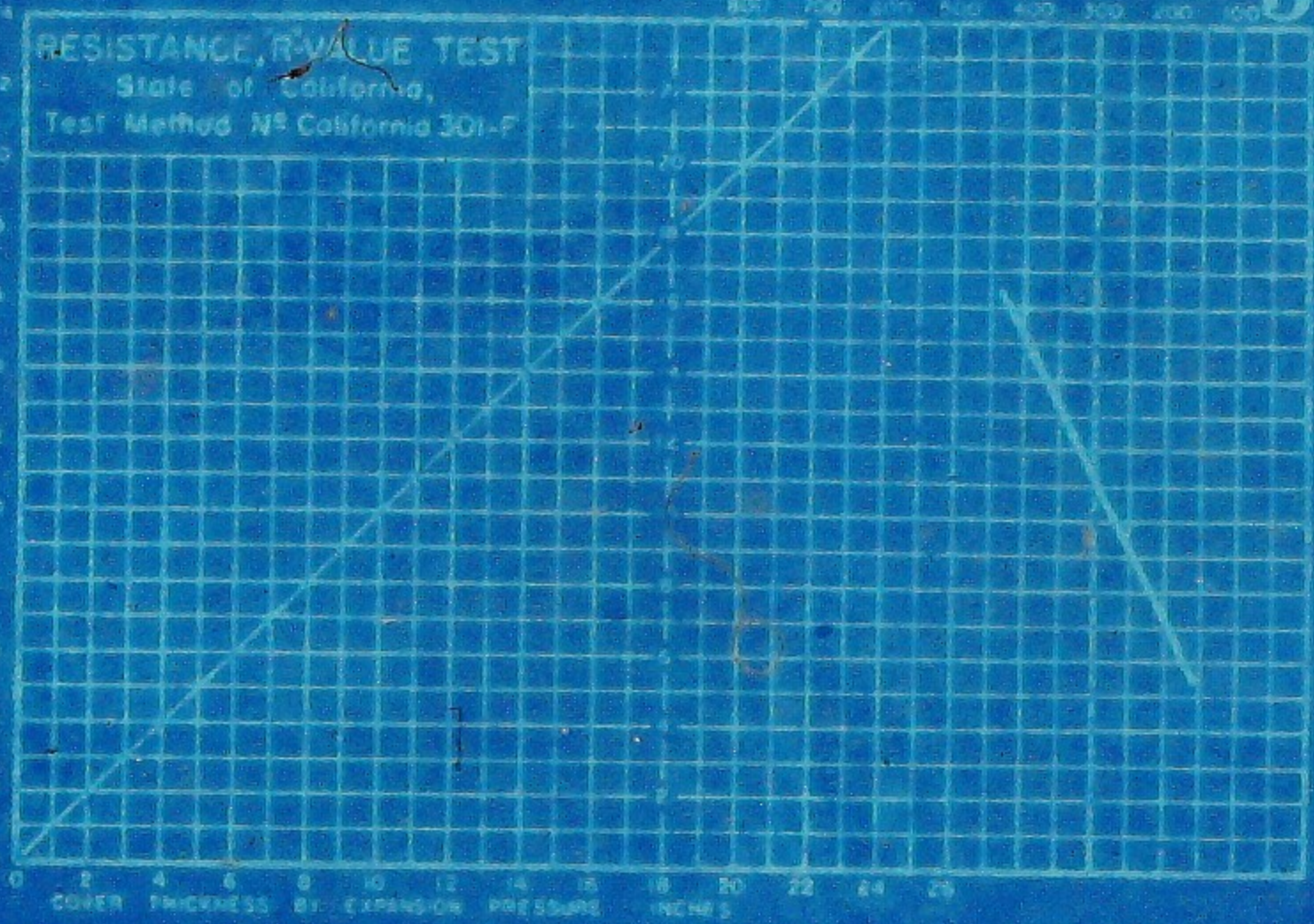

Sample: Pt. XV at 3.0' to 3.5'

Description: Silty clay with some sand.

Specimen	A	B	C
Exudation Pressure, p.s.i.	183	342	422
Expansion dial (.0001")	0	4	10
Expansion Pressure, p.s.f.	0	17	43
Resistance Value, "R"	12	44	60
% Moisture at Test	11.8	11.0	10.1
Dry Density at Test, p.c.f.	123.7	126.5	127.4
"R" Value at 300 p.s.i. Exudation Pressure	= (35)		

CONFORMED

File No: T8328-NH
Lab. No. 11706
February 4, 1972
Job No. 23-238-70

3151

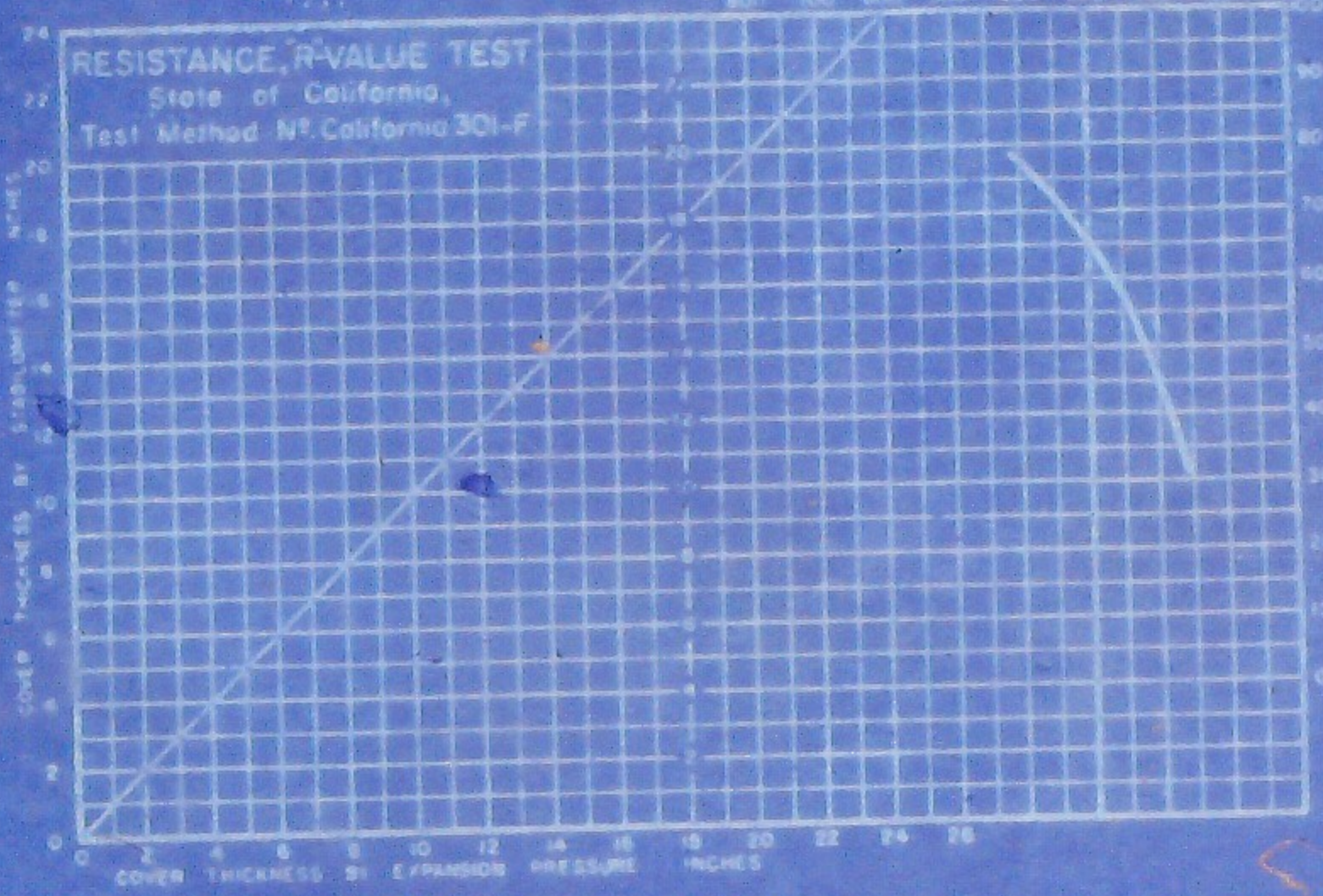

Sample: Pt. XVI at 3.0'

Description: Tan sandy silt.

Specimen	A	B	C
Exudation Pressure, p.s.i.	175	279	398
Expansion dial (.0001")	4	15	65
Expansion Pressure, p.s.f.	17	65	282
Resistance Value, "R"	38	63	77
% Moisture at Test	17.0	15.7	14.8
Dry Density at Test, p.c.f.	111.5	113.0	114.5
"R" Value at 300 p.s.i. Exudation Pressure	= (66)		

CONFORMED

Job No. 23-238-70

LOGS OF TEST PITS

TEST PIT NO.	DEPTH (feet)	DESCRIPTION
TP-1	0 to 1'-8"	Dark brown to black clay, high plasticity, moist.
	1'-8" to 2'-3"	Light greyish tan sandy silt, damp.
	2'-3" to 4'-0"	Grading moist to very moist.
TP-2	0 to 3'-0"	Dark brown clay, high plasticity, damp to moist
	3'-0" to 4'-0"	Light tan clay, damp.
TP-3	0 to 1'-0"	Black clay, high plasticity, very moist to wet.
	1'-0" to 2'-6"	Grading drier.
	2'-6" to 4'-0"	Light tan clay, high plasticity, very moist.
TP-4	0 to 1'-6"	Black clay, high plasticity, very moist to wet.
	1'-6" to 2'-6"	Grading drier.
	2'-6" to 4'-0"	Light tan silty clay, moderate cohesion.
TP-5	0 to 1'-6"	Black clay, high plasticity, very moist.
	1'-6" to 2'-6"	Grading drier.
	2'-6" to 3'-6"	Light tan silty clay, low plasticity, slightly damp.
TP-6	0 to 2'-6"	Black clay, high plasticity, very moist to wet.
	2'-6" to 4'-0"	Tan silty clay, low to moderate plasticity, slightly damp.
TP-7	0 to 2'-0"	Black clay, high plasticity, moist.
	2'-0" to 3'-0"	Light tan silty clay, low plasticity, slightly damp.
TP-8	0 to 2'-6"	Black clay, high plasticity, moist.
	2'-6" to 4'-0"	Tan silty clay, low plasticity, slightly damp.

CONFORMED

Job No. 23-238-70

LOGS OF TEST PITS (continued)

TEST PIT NO.	DEPTH (feet)	DESCRIPTION
TP-9	0 to 2'-0"	Black clay, high plasticity, damp.
	2'-0" to 3'-6"	Tan silty clay, low plasticity, dry to slightly damp.
TP-10	0 to 2'-0"	Black clay, high plasticity, damp.
	2'-0" to 3'-6"	Tan silty clay, low plasticity, dry to slightly damp.
TP-11	0 to 2'-2"	Dark brown to black clay, high plasticity, damp.
	2'-2" to 3'-6"	Tan silty clay, low plasticity slightly damp.
TP-12	0 to 2'-0"	Black clay, high plasticity, damp to moist.
	2'-0" to 3'-6"	Tan silty clay with occasional fine gravel, dry to slightly damp
TP-13	0 to 2'-0"	Dark brown to black clay, high plasticity, moist.
	2'-0" to 3'-0"	Tan silty clay, slightly damp.
	3'-0" to 5'-0"	Tan silty clay with occasional fine gravel, dry to slightly damp
TP-14	0 to 1'-6"	Dark brown clay, high plasticity, moist.
	1'-6" to 3'-6"	Tan silty clay with occasional coarse sand to fine gravel, slightly damp.
TP-15	0 to 2'-0"	Black clay, high plasticity, moist.
	2'-0" to 3'-6"	Tan silty clay with occasional coarse sand to fine gravel, slightly damp.
TP-16	0 to 2'-6"	Black clay, high plasticity, moist.
	2'-6" to 3'-0"	Tan sandy silt, slightly damp.

CONFORMED

Appendix H

As-built Plans

Los Coches Street Bridge

CONFORMED

DIST.	COUNTY	ROUTE	POST MILES—TOTAL PROJECT	SHEET NO.	TOTAL SHEETS
04	SCl, Ala	680	M.7.2 / R6.8	254	363

BRIDGE ENGINEER — REGISTERED CIVIL ENGINEER NO. 8463

DATE APPROVED April 22, 1968

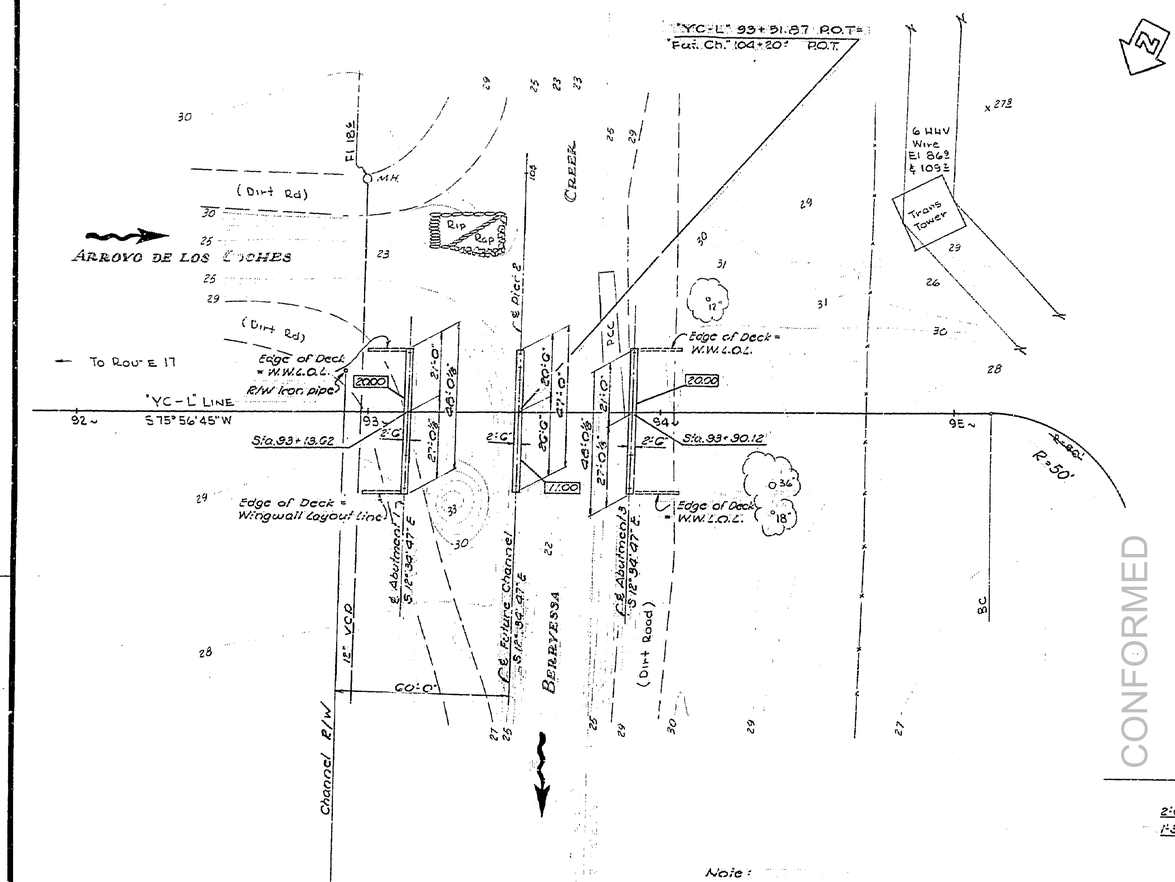

POT 16
Fd-1P in Man well at
℄ Dempsey & Calaveras Rd
Elev 42.130

TBM "A"
Set-top ginny 25' Lt
"YC-L" 93 ~
Elev 30.25

Note:

+ Indicates piles.

▭ Indicates bottom of footing elevations.

General Notes (Highway Structures)

Design: A.A.S.H.O. dated 1961 with revisions and as supplemented by Bridge Planning and Design Manual.

Live Loading: HS 20-44 and Alternative

Reinforced Concrete: F_s = 20,000 p.s.i., N = 10
F_c = 1,200 p.s.i.

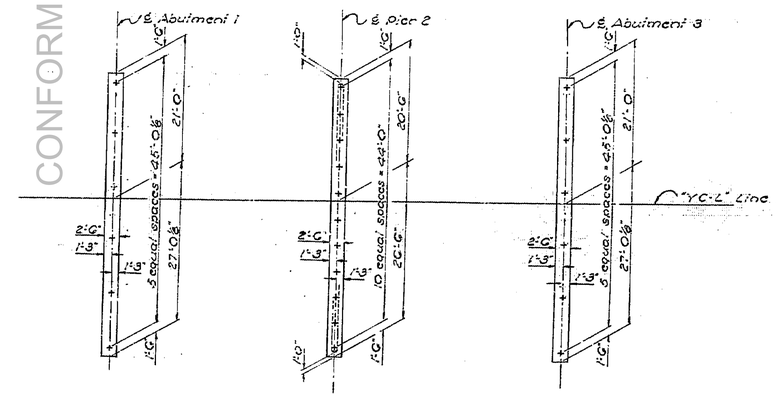

PILE LAYOUT
1" = 10'

PR-37C 57-1

SCALE 1" = 20'
LEVEL DATUM: USC & GS, MSL
FOR ALIGNMENT TIES SEE PR-37C57-3
CONTOURS AS OF 6-6-66
SITE PLAN TO SUPPLEMENT DISTRICT DATA.
SURVEY BY LHE DATE 6-6-66
DRAWN BY LHE DATE 7-7-66
TRACED BY JS DATE 7-7-66

AS BUILT
CORRECTIONS BY R. Ogata - M.G.
CONTRACT NO. 04-119504
DATE 11-9-70 / 4-8-71

AS BUILT PLANS
Contract No. 04-119504
Date Completed
Document No. 4/0003891

BRIDGE DEPARTMENT
DESIGN SECTION
Section Supervisor H. L. Gongola

DESIGN	By J. Clausen	7/67
	Checked C. W. Craig Jr.	9/67
DETAILS	By J. Clausen	7/67
	Checked C. W. Craig Jr.	9/67
QUANTITIES	By Joe Aguirre	12/67
	Checked K. Chang	12/67

STATE OF CALIFORNIA
HIGHWAY TRANSPORTATION AGENCY
DEPARTMENT OF PUBLIC WORKS
DIVISION OF HIGHWAYS

BERRYESSA CREEK BRIDGE

FOUNDATION PLAN

BRIDGE NO.	POST MILE	DRAWING NO.	SHEET	OF
37C-57		S 7C 57-2	2	5

REVISION DATES (PRELIMINARY STAGE ONLY)

Disregard prints bearing earlier revision dates

E-37

WO
CU

254

I HEREBY CERTIFY THAT THIS IS A TRUE AND ACCURATE COPY OF THE ABOVE DOCUMENT TAKEN UNDER MY DIRECTION AND CONTROL ON THIS DATE IN SACRAMENTO, CALIFORNIA PURSUANT TO AUTHORIZATION BY THE DIRECTOR OF PUBLIC WORKS.

DATE 4/13/71 SIGNATURE [illegible] TITLE [illegible]

CONFORMED

MICROFILM - STATE OF CALIFORNIA - DEPARTMENT OF PUBLIC WORKS - MICROFILM

ClibPDF - www.fastio.com

Revised Footing Note, Title Bar, & the Seismic Load Loading 10 Apr 68 EJS

Changed 1'-0" in Sec "AA" to 1'-3" JRJ 6-15-66

Deleted "Wingwall Elev" Revised Fillet on Part Plan-Part", #6 Bars in "Sec A-A", Reinforcing in "Sec F-F", Title Block 3 Jan 66 EJS

DIST	COUNTY	ROUTE	POST MILES-TOTAL PROJECT	SHEET NO.	TOTAL SHEETS
04	SCl Alz	680	M 7.2/R6.8	255	363

Bridge Engineer — Civil Engineer — Locale Engr

Date Approved April 22, 1968

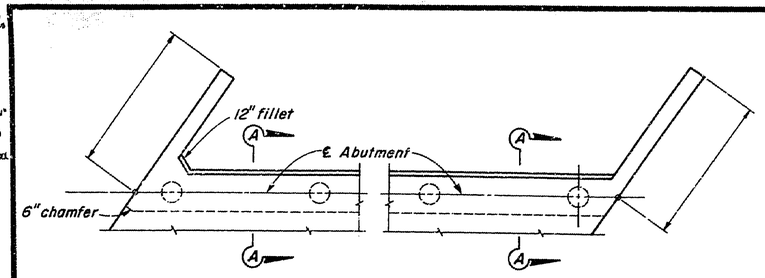

PART PLAN-ABUTMENT
With Skew

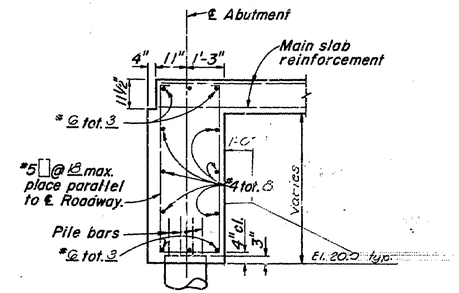

SECTION A-A

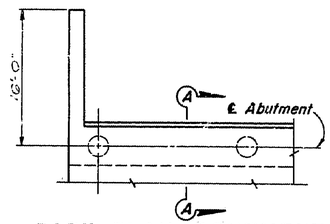

PART PLAN-ABUTMENT
No Skew

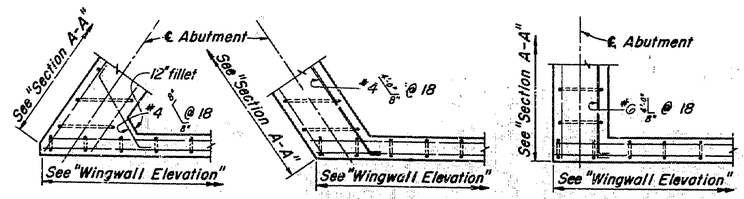

SECTIONS F-F
With Skew — No Skew

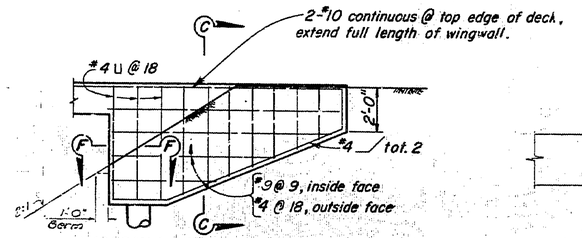

WINGWALL ELEVATION
Curb and Railing not shown

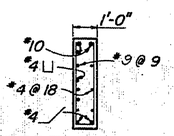

SECTION C-C

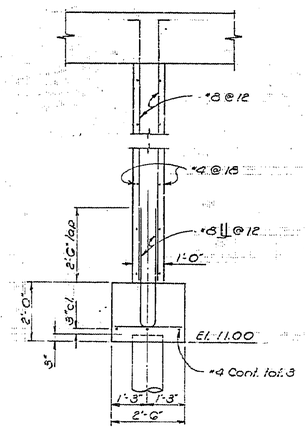

SECTION THRU PIER
½" = 1'-0"

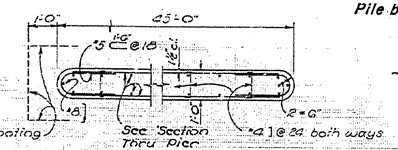

SECTION THRU PIER STEM
½" = 1'-0"

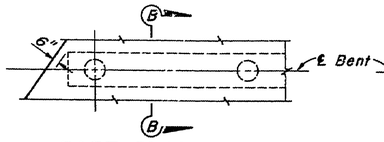

PART PLAN-BENT
With Skew

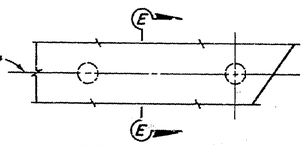

PART PLAN-BENT
With Skew

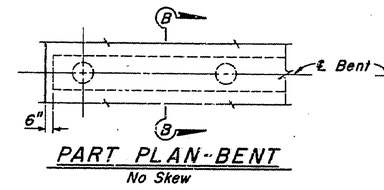

PART PLAN-BENT
No Skew

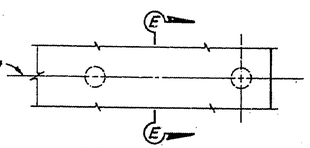

PART PLAN-BENT
No Skew

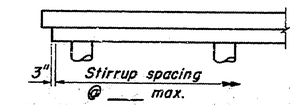

PART ELEVATION-BENT

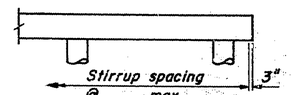

PART ELEVATION-BENT

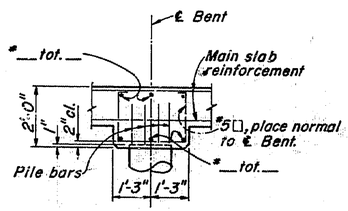

SECTION B-B

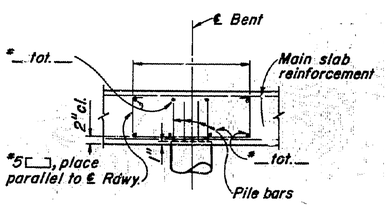

SECTION E-E

No As Built Changes
AS BUILT
CORRECTIONS BY R. Ogata - M.G.
CONTRACT NO. 04-119504
DATE 11-9-70/4-8-71

AS BUILT PLANS
Contract No. 04-119504
Date Completed
Document No. 4/0003891

LIVE LOADING: HS 20-44 & ALTERNATIVE

STANDARD DRAWING
Submitted by: Bridge Engineer
Design Engineer: Bridge Engineer
Approved Recommendation: Bridge Engineer
Date Approved: 1-7-66
Date Issued: 1-7-66
Date Issued: 6-1-66

1/66 — STATE OF CALIFORNIA TRANSPORTATION AGENCY DEPARTMENT OF PUBLIC WORKS DIVISION OF HIGHWAYS — XS-12-37

BERRYESSA CREEK BRIDGE

ABUTMENT AND PIER DETAILS

BRIDGE NO.	POST MILE	DRAWING NO.	SHEET	OF
37C-57		37C57-3	3	5

REVISION DATES (PRELIMINARY STAGE ONLY)
Disregard prints bearing earlier revision dates
2/24/61 3/1/62 1/15/66

255

CONFORMED

I HEREBY CERTIFY THAT THIS IS A TRUE AND ACCURATE COPY OF THE ABOVE DOCUMENT TAKEN UNDER MY DIRECTION AND CONTROL ON THIS DATE IN SACRAMENTO, CALIFORNIA PURSUANT TO AUTHORIZATION BY THE DIRECTOR OF PUBLIC WORKS.

DATE 4/1/71 SIGNATURE [illegible] TITLE [illegible]

MICROFILM - STATE OF CALIFORNIA - DEPARTMENT OF PUBLIC WORKS - MICROFILM

ClibPDF - www.fastio.com

DIST.	COUNTY	ROUTE	POST MILES—TOTAL PROJECT	SHEET No.	TOTAL SHEETS
04	SCl/Ala	680	M 12.1/R6.8	257	363

DESIGN ENGINEER REGISTERED CIVIL ENGINEER NO. 9583

DATE APPROVED April 22, 1968

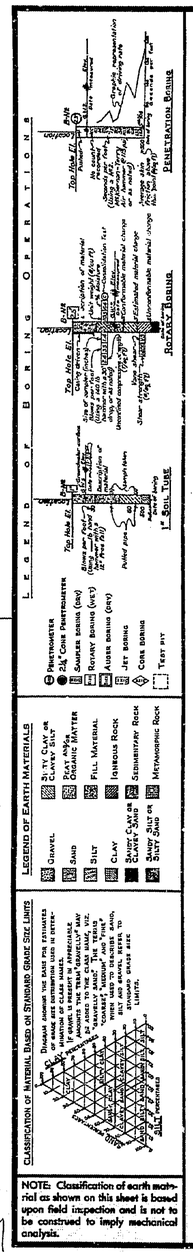

FIELD STUDY		
DRAWN	W. R. Fox	JAN-15-67
CHECKED	W. R. Fox	JAN-15-67
CHECKED	W. A. Mooney	12-20-67

Approval Recommended: Engineering Geologist

BRIDGE DEPARTMENT
ENGINEERING GEOLOGY SECTION

257

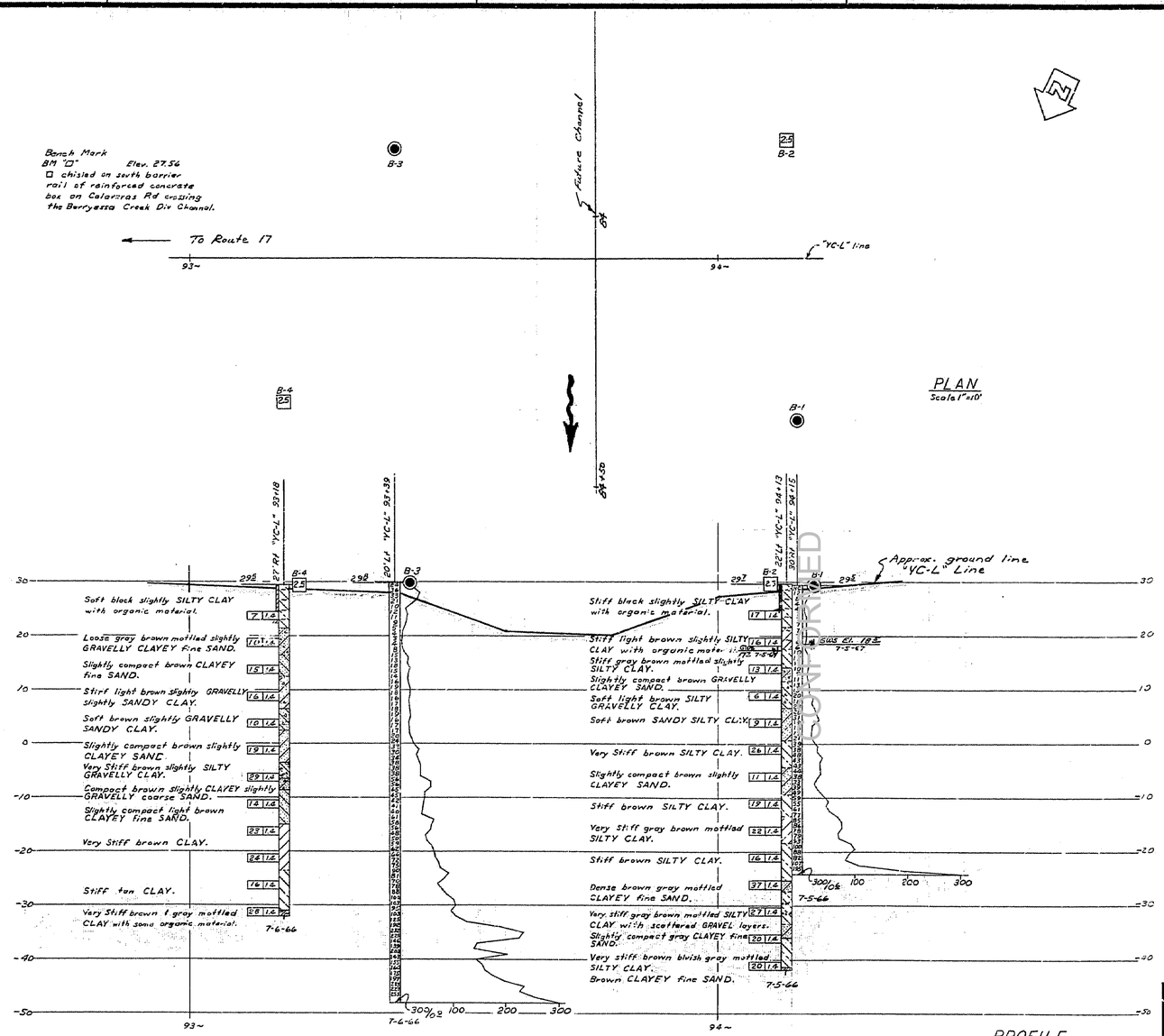

INFORMATION ON ACTUAL FOUNDATION CONDITIONS ENCOUNTERED IS ON FILE IN BRIDGE GEOLOGY SECTION

AS BUILT PLANS
Contract No. 04-119504
Date Completed
Document No. 41003891

STATE OF CALIFORNIA
TRANSPORTATION AGENCY
DEPARTMENT OF PUBLIC WORKS
DIVISION OF HIGHWAYS

BERRYESSA CREEK

LOG OF TEST BORINGS

BRIDGE NO.	POST MILE	DRAWING NO.	SHEET	OF
37C-57		37C57-5	5	5

REVISION DATES (PRELIMINARY STAGE ONLY)

10/12/67

WO 119503
CU 04204

PR-37C57-2
Disregard prints bearing earlier revision dates

I HEREBY CERTIFY THAT THIS IS A TRUE AND ACCURATE COPY OF THE ABOVE DOCUMENT TAKEN UNDER MY DIRECTION AND CONTROL ON THIS DATE IN SACRAMENTO, CALIFORNIA PURSUANT TO AUTHORIZATION BY THE DIRECTOR OF PUBLIC WORKS.

DATE 4/13/2011 SIGNATURE [illegible] TITLE [illegible]

MICROFILM - STATE OF CALIFORNIA - DEPARTMENT OF PUBLIC WORKS - MICROFILM
SCALE 1"=50' SCALE 1"=20' SCALE 1"=10' or 1"=100' SCALE 1"=40'

ClibPDF - www.fastio.com

DIST.	COUNTY	ROUTE	POST MILES—TOTAL PROJECT	SHEET NO.	TOTAL SHEETS
04	SCl, Ala	680	M 7.2 / R6.8	253	369

BRIDGE ENGINEER — REGISTERED CIVIL ENGINEER NUMBER 5595

ASSISTANT STATE HIGHWAY ENGINEER — REGISTERED CIVIL ENGINEER NUMBER 5390

DATE APPROVED April 22, 1968

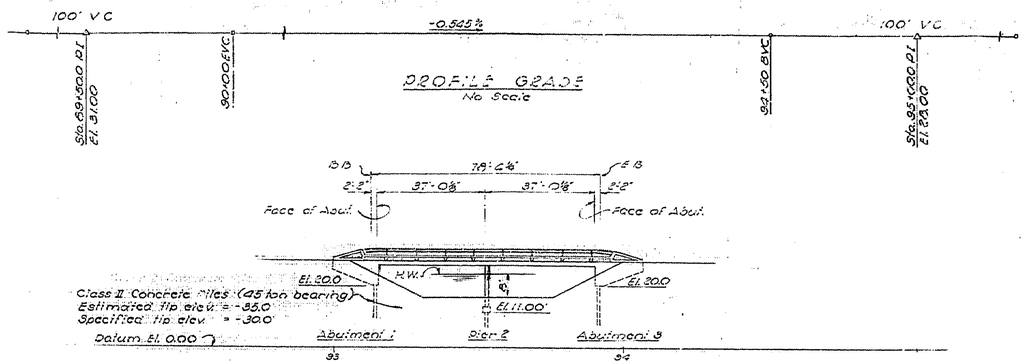

Note All piles driven to Specified tip exactly

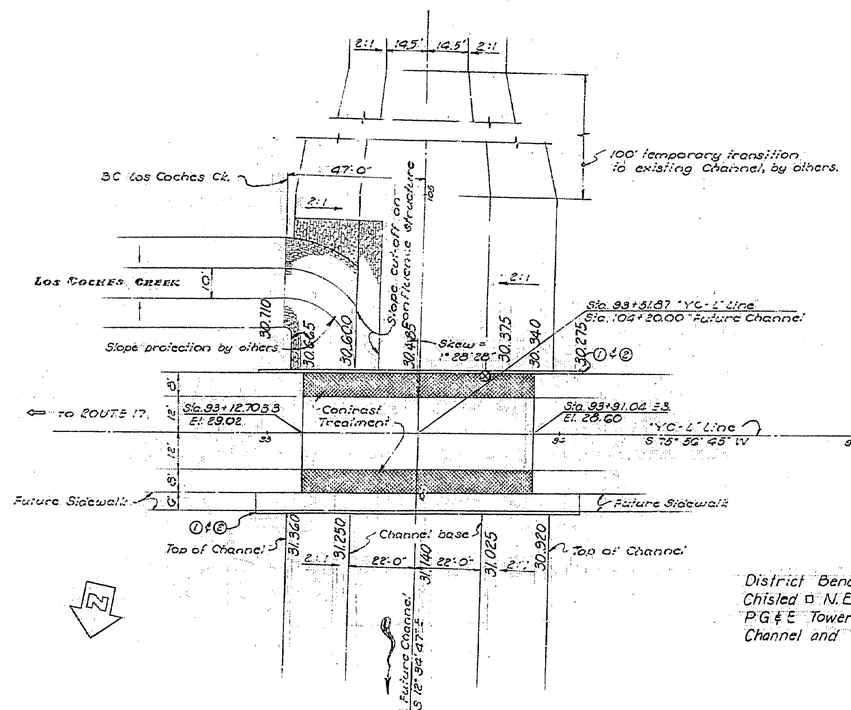

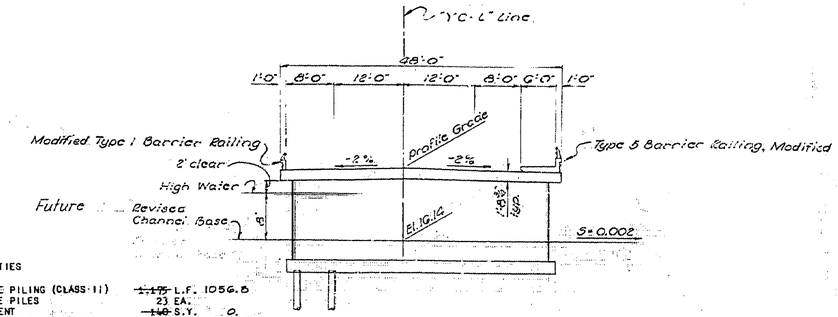

APPROXIMATE QUANTITIES

FURNISH CONCRETE PILING (CLASS II)	~~1,175~~ L.F.	1056.5
DRIVING CONCRETE PILES	23 EA.	
CONTRAST TREATMENT	~~140~~ S.Y.	0.
BARRIER RAILING (TYPE 1 MODIFIED)	~~110~~ L.F.	108.5
BARRIER RAILING (TYPE 5 MODIFIED)(6')	~~110~~ L.F.	108.4

FINAL QUANTITIES

STRUCTURE EXCAVATION (BRIDGE)	140 C.Y.
STRUCTURE BACKFILL (BRIDGE)	85 C.Y.
CLASS A CONCRETE (BRIDGE)	350 C.Y.
BAR REINFORCING STEEL (BRIDGE)	64,000 LBS.

Note: All tooled concrete surfaces stained Red Brown

INDEX TO PLANS

Sheet No.	Title
1	General Plan
2	Foundation Plan
3	Abutment and Pier Details
4	Slab Details - 2 Spans
5	Log of Test Boring

The following sheets to be found in the "STANDARD PLANS" book dated 1968:

B2-1	Concrete Pile Details 45T
B11-0	Barrier Railing Types 1, 4 & 5
B11-1	Barrier Railing Types 1, 4 & 5
B11-2	Barrier Railing Details

See Calaveras Road Undercrossing -37-302 for the following structure detail sheets:

- A1 Modified Barrier Railing Details -S
- A2 Modified Barrier Railing Details -A
- A3 Bridge Approach Guard Railing - Layout
- A4 Modified Bridge Approach Guard Railing
- A5 Barrier Railing Details -Steel Post
- A6 Type 1 Slope Paving Details

AS BUILT PLANS
Contract No. 04-119504
Date Completed
Document No. 4 00023891

AS BUILT
CORRECTIONS BY D.J. Patterson - M.G.
CONTRACT NO. 04-119504
DATE 11-9-70 / 4-8-71

District Bench Mark
Chisled □ N.E. Corner of N.E. PCC Base
P.G.&E. Tower in S.W. Quad of Berryessa
Channel and YC-L Line. Elev. 29.255

The future channel had not been construct at Contract end. Vertical clearance was not measured.

① Point No. of Bridge & Year constructed.
② Point Name of Bridge
⊗ Point of min. vertical clearance

FOR GENERAL NOTES SEE "Foundation Plan & Grid Grades"

LIVE LOADING H30-44 AND ALTERNATIVE

BRIDGE DEPARTMENT
*** DESIGN SECTION *** 6

Section Supervisor H. J. Pr
Project Designer L.H. Goldwell

DESIGN	by J. Oliveira 7/67	Checked C.W. Bragh 9/67	
DETAILS	by J. Oliveira 7/67	Checked C.W. Bragh 9/67	
LAYOUT	by J. Oliveira 7/67	Checked C.W. Bragh 9/67	
QUANTITIES	by L. Johnson 10/67	Checked R.	
SPECIFICATIONS	by L. Bailey 1968	Plans and Specs. Compared	

Approval Recommended by — Approved: Chief, Div. Bridge Design, Licensed No. 17348

STATE OF CALIFORNIA
TRANSPORTATION AGENCY
DEPARTMENT OF PUBLIC WORKS
DIVISION OF HIGHWAYS

BERRYESSA CREEK BRIDGE

LOCATED .5 MI. S. OF CALAVERAS RD. AND .2 MI. S. OF JACKLIN ROAD IN THE CITY OF MILPITAS IN SANTA CLARA COUNTY.

GENERAL PLAN

BRIDGE NO.	POST MILE	DRAWING NO.	SHEET	OF
37C-57		37C57-1	1	5

WO 119501
CU 04 204

Disregard prints bearing earlier revision dates

REVISION DATES (PRELIMINARY STAGE ONLY)

253

I HEREBY CERTIFY THAT THIS IS A TRUE AND ACCURATE COPY OF THE ABOVE DOCUMENT TAKEN UNDER MY DIRECTION AND CONTROL ON THIS DATE IN SACRAMENTO, CALIFORNIA PURSUANT TO AUTHORIZATION BY THE DIRECTOR OF PUBLIC WORKS.

DATE 4/19/71 SIGNATURE [illegible] TITLE [illegible]

MICROFILM - STATE OF CALIFORNIA - DEPARTMENT OF PUBLIC WORKS - MICROFILM

ClibPDF - www.fastio.com

DIST.	COUNTY	ROUTE	POST MILES—TOTAL PROJECT	SHEET No.	TOTAL SHEETS
04	SCl, Ala	680	M 7.2 / R6.8	253	363

BRIDGE ENGINEER — REGISTERED CIVIL ENGINEER NUMBER 5560

ASSISTANT STATE HIGHWAY ENGINEER — REGISTERED CIVIL ENGINEER NUMBER 5390

DATE APPROVED April 22, 1968

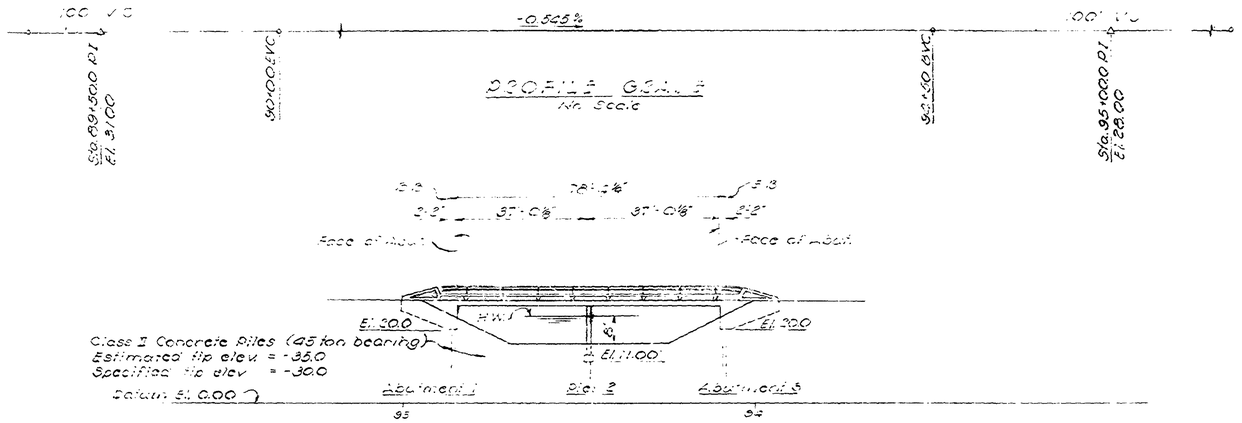

Note: All piles driven to Specified tip exactly

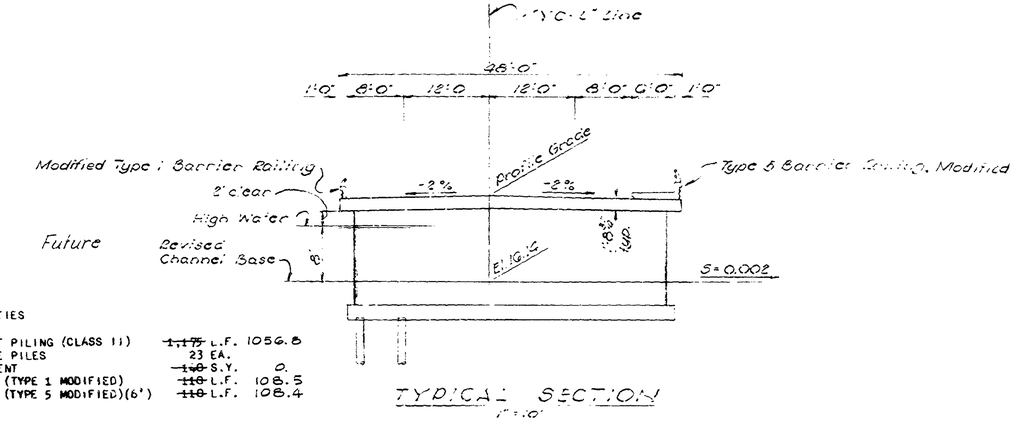

APPROXIMATE QUANTITIES

FURNISH CONCRETE PILING (CLASS II)	~~1,175~~ L.F.	1056.8
DRIVING CONCRETE PILES	23 EA.	
CONTRAST TREATMENT	~~140~~ S.Y.	0.
BARRIER RAILING (TYPE 1 MODIFIED)	~~110~~ L.F.	108.5
BARRIER RAILING (TYPE 5 MODIFIED)(6')	~~110~~ L.F.	108.4

FINAL QUANTITIES

STRUCTURE EXCAVATION (BRIDGE)	140 C.Y.
STRUCTURE BACKFILL (BRIDGE)	85 C.Y.
CLASS A CONCRETE (BRIDGE)	350 C.Y.
BAR REINFORCING STEEL (BRIDGE)	64,000 LBS.

Note: All tooled concrete surfaces stained Red Brown

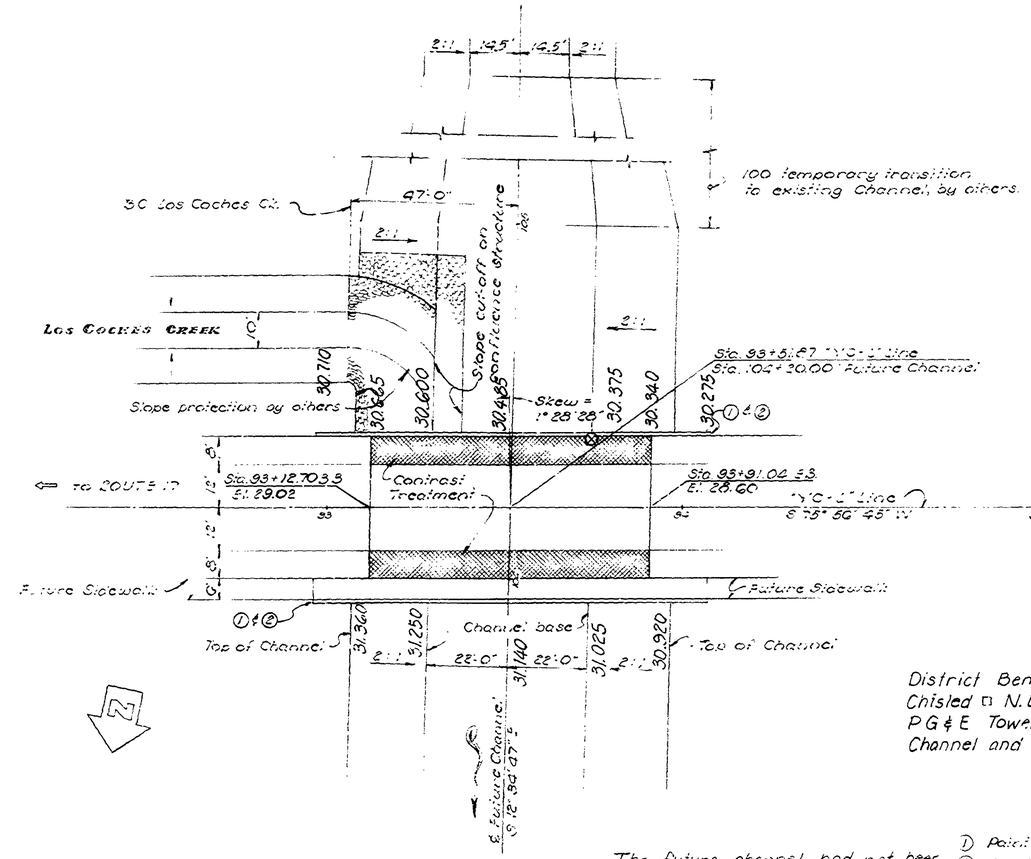

100' temporary transition to existing Channel, by others.

The future channel had not been construct at Contract end Vertical clearance was not measured.

District Bench Mark
Chisled □ N.E. Corner of N.E. PCC Base
P G & E Tower in S.W. Quad of Berryessa Channel and YC-L Line. Elev. 29.255

① Point No. of Bridge & Year constructed.
② Point Name of Bridge
③ Point of min. vertical clearance

FOR GENERAL NOTES SEE "Foundation Plan & Grid Grades"

LIVE LOADING HS20-44 AND ALTERNATIVE

INDEX TO PLANS

Sheet No. — Title
1 ——— General Plan
2 ——— Foundation Plan
3 ——— Abutment and Pier Details
4 ——— Slab Details - 2 Spans
5 ——— Log of Test Boring

The following sheets to be found in the "STANDARD PLANS" book dated 1968
B2-1 ——— Concrete Pile Details 45T
B11-0 ——— Barrier Railing Type 1
B11-1 ——— Barrier Railing Types 2,4,5
B11-2 ——— Barrier Railing Details
See Calaveras Road Undercrossing - 37-302 for the following structure detail sheets:
A1 Modified Barrier Railing Details - S
A2 Modified Barrier Railing Details - A
A3 Bridge Approach Guard Railing - Layout
A4 Modified Bridge Approach Guard Railing
A5 Barrier Railing Details - Steel Post
A-6 Type 1 Slope Paving Details

AS BUILT PLANS
Contract No. 04-119504
Date Completed
Document No. 41000389

AS BUILT
CORRECTIONS BY D.J. Patterson - M.G.
CONTRACT NO. 04-119504
DATE 11-9-70 / 4-8-71

CONFORMED

BRIDGE DEPARTMENT
··· DESIGN SECTION ··· 6
Section Supervisor H. L. Paul
Project Designer L. H. Caldwell

DESIGN	By J. Chimura 7/67	Checked C. W. Bragg 9/67		
DETAILS	By J. Chimura 7/67	Checked C. W. Bragg 9/67		
LAYOUT	By J. Chimura 8/67	Checked C. W. Bragg 9/67		
QUANTITIES	By L. Nelson 10/67	Checked K. Bergman 11/67		
SPECIFICATIONS	By H. Burkert 1968	Plans and Specs. Comp. by		
Approval Recommended by		Registered Civil Engr. License No. 6720		

STATE OF CALIFORNIA
TRANSPORTATION AGENCY
DEPARTMENT OF PUBLIC WORKS
DIVISION OF HIGHWAYS

BERRYESSA CREEK BRIDGE

LOCATED .5 MI. S. OF CALAVERAS RD. AND .2 MI. S. OF JACKLIN ROAD IN THE CITY OF MILPITAS IN SANTA CLARA COUNTY.

GENERAL PLAN

BRIDGE NO.	POST MILE	DRAWING NO.	SHEET	OF
37C-57		37C57-1	1	5

REVISION DATES (PRELIMINARY STAGE ONLY)

WO 119501
CU 04 204

Disregard prints bearing earlier revision dates

253

I HEREBY CERTIFY THAT THIS IS A TRUE AND ACCURATE COPY OF THE ABOVE DOCUMENT TAKEN UNDER MY DIRECTION AND CONTROL ON THIS DATE IN SACRAMENTO, CALIFORNIA PURSUANT TO AUTHORIZATION BY THE DIRECTOR OF PUBLIC WORKS.

ClibPDF - www.fastio.com

Revised Chart 3-61 RTK

Added Camber Diagram & notes revised thereto. FHS 5-9-62

Removed notes above "Longitudinal or Transverse Slab Const. Jt." detail 3-17-63 JFJ

Revised Title Block and Live Loading to HS-20-44 22 Sept 65 EJJ

Deleted "Notes". Revised: Steel Spacing note to Longitudinal Reg. Table; Title Block added "and Notes". 7 Jan 66 EJJ

DIST	COUNTY	ROUTE	POST MILES-TOTAL PROJECT	SHEET NO.	TOTAL SHEETS
04	Sol, Nap	680	M 7.2/R6.8	256	369

R. C. Blake
BRIDGE ENGINEER - CIVIL ENGINEER - STRUCTURE DESIGN

DATE APPROVED April 22, 1968

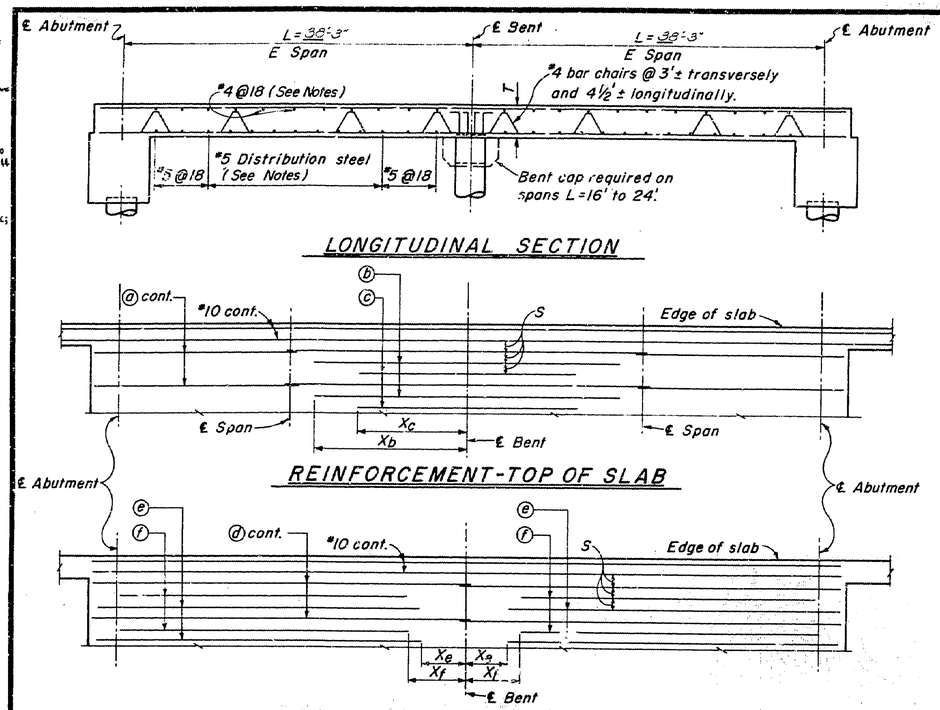

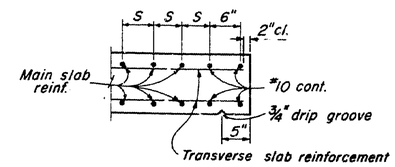

EDGE OF SLAB DETAIL

Curb and railing not shown

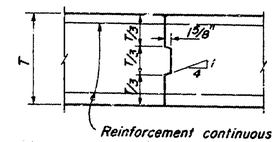

Note: Transverse joints, if used, to be located at ¼ point of span and longitudinal joint to be located at edge of traffic lanes unless otherwise permitted by the Engineer.

LONGITUDINAL OR TRANSVERSE SLAB CONSTRUCTION JOINT

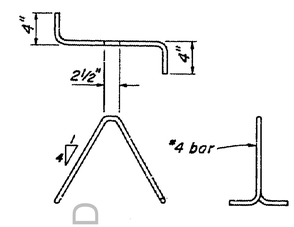

BAR CHAIR DETAIL

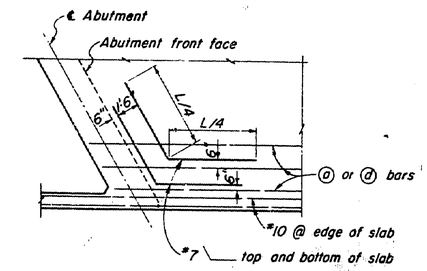

OBTUSE CORNER DETAIL

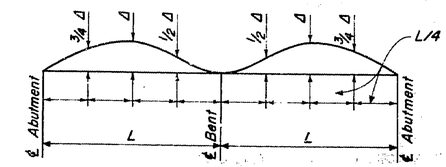

CAMBER DIAGRAM

TOTAL SLAB DEFLECTION DUE TO DEAD LOADS

The total deflection will be reached about 4 years after falsework removal. For values at time of falsework removal divide those shown by 4.

The amount of camber for construction will be determined by the Engineer.

REINFORCEMENT			
L = Length of Span			
Top of Slab	ⓐ bars	Size	#9
		Length	82'-0"
	ⓑ bars	Size	#11
		Length	21'-6"
		Xb	10'-9"
	ⓒ bars	Size	#11
		Length	11'-0"
		Xc	5'-6"
Bottom of Slab	ⓓ bars	Size	#9
		Length	81'-0"
	ⓔ bars	Size	#9
		Length	31'-6"
		Xe	7'-6"
	ⓕ bars	Size	#10
		Length	24'-6"
		Xf	10'-3"
Dist.-Steel Spacing			9"
T = Thickness of slab			1'-8¾"
S = Bar Spacing			5½"
Clearance to main reinforcing			2"
Ultimate dead load deflection @ ℄ Span			.06'

NOTES :

Splices in top main bars to be 35 dia. and located near center of span.

Splices in bottom main bars to be 20 dia. and located near bent.

Spacing of #4 @ 18 is measured normal to bars.

Spacing of #5 bars in bottom of slab is measured along ℄ roadway. For spacing in center half of span see Table.

Place all transverse bars parallel to bent.

AS BUILT PLANS
Contract No. 04-119504
Date Completed
Document No. 4/0003891

No As Built Changes
AS BUILT
CORRECTIONS BY R. Ogata-M.G.
CONTRACT NO. 04-119504
DATE 11-9-70/4-8-71

LIVE LOADING: HS-20-44 and ALTERNATIVE

STANDARD DRAWING
Submitted by: John Ash
DESIGN: R. W. Hall
DETAILS: R. Wilkinson
Approved Recommended: W. T. Cook
Approved: R. C. Blake
BRIDGE ENGINEER
No. C 2149

1/66 STATE OF CALIFORNIA TRANSPORTATION AGENCY DEPARTMENT OF PUBLIC WORKS DIVISION OF HIGHWAYS XS-12-38

BERRYESSA CREEK BRIDGE

SLAB DETAILS-2 SPANS

BRIDGE NO.	POST MILE	DRAWING NO.	SHEET	OF
37C-57		37C57-4	4	5

REVISION	DATES	(PRELIMINARY STAGE ONLY)
7/66		

Disregard prints bearing earlier revision dates

I HEREBY CERTIFY THAT THIS IS A TRUE AND ACCURATE COPY OF THE ABOVE DOCUMENT TAKEN UNDER MY DIRECTION AND CONTROL ON THIS DATE IN SACRAMENTO, CALIFORNIA PURSUANT TO AUTHORIZATION BY THE DIRECTOR OF PUBLIC WORKS.

DATE 4/13/71 SIGNATURE [illegible] TITLE Sr. Draftsman

CONFORMED

ClibPDF - www.fastio.com

DIST.	COUNTY	ROUTE	POST MILES—TOTAL PROJECT	SHEET NO.	TOTAL SHEETS
04	SCl, Ala	680	M 7.2 / R6.8	254	363

BRIDGE ENGINEER — REGISTERED CIVIL ENGINEER NO. 5385

DATE APPROVED April 22, 1968

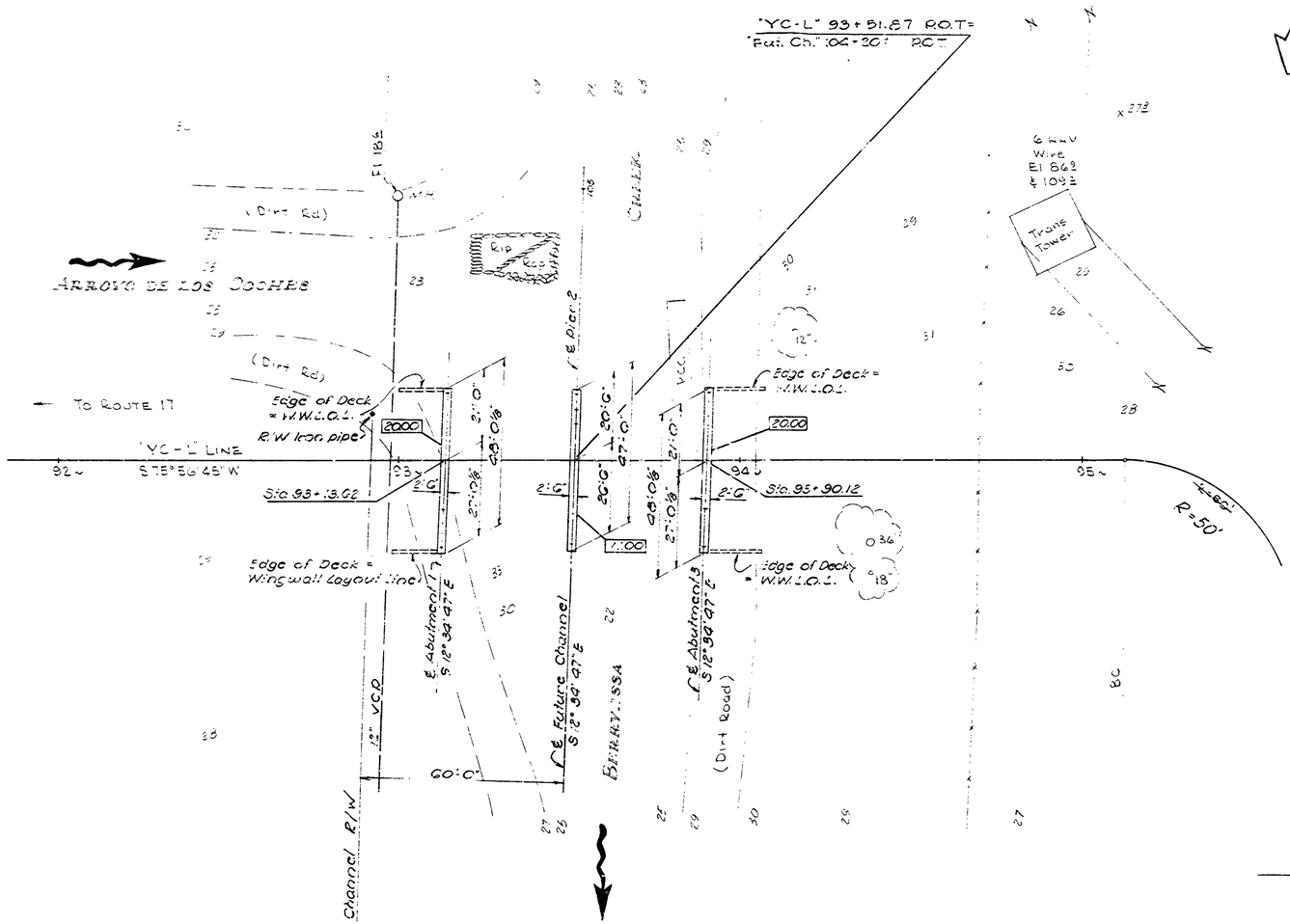

POT 16
Fd-1P in Mon well at
E Dempsey & Calaveras Rd
Elev 42.39

TBM "A"
Set-Top ginny 25 Lt
"YC-L" 93 ~
Elev 30.25

Note:

+ Indicates piles.

▭ Indicates bottom of footing elevations.

General Notes (Highway Structures)

Design: A.A.S.H.O. dated 1961 with revisions and as supplemented by Bridge Planning and Design Manual.

Live Loading: HS 20-44 and Alternative

Reinforced Concrete: F_s = 20,000 p.s.i., N = 10
F_c = 1,200 p.s.i.

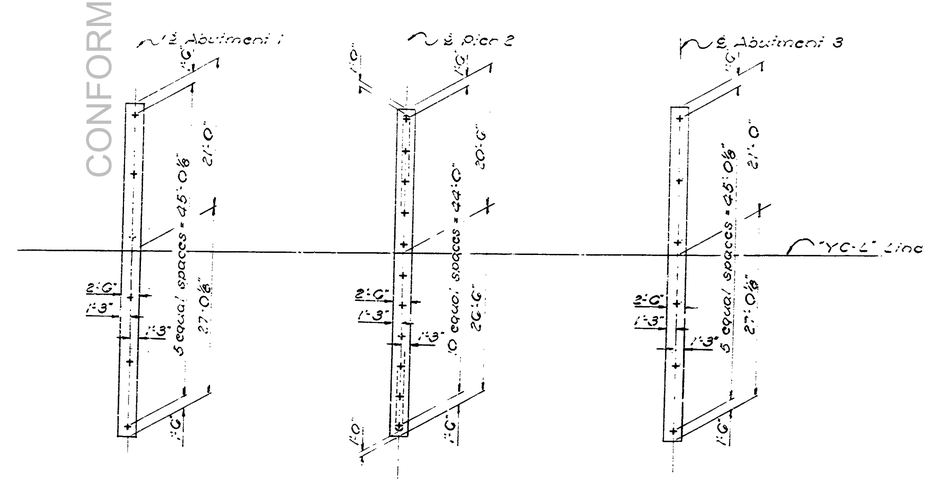

PILE LAYOUT
1" = 10'

CONFORMED

AS BUILT
CORRECTIONS BY R. Ogata - M.G.
CONTRACT NO. 04-119504
DATE 11-9-70 / 4-8-71

AS BUILT PLANS
Contract No. 04-119504
Date Completed
Document No. S/0003891

SCALE	1" = 20'
LEVEL DATUM	U.S.C.&G.S. 1929
FOR ALINEMENT TIES SEE	PR. 37C57-3
CONTOURS AS OF	6-6-66
SITE PLAN TO SUPPLEMENT DISTRICT DATA.	
SURVEY BY	JHE DATE 6-6-66
DRAWN BY	JHE DATE 7-7-66
TRACED BY	JS DATE 7-7-66

BRIDGE DEPARTMENT
DESIGN SECTION

Section Supervisor H. L. Gingle

DESIGN	By T. Chinuya	7/67
	Checked C. W. Craig Jr.	9/67
DETAILS	By T. Chinuya	7/67
	Checked C. W. Craig Jr.	9/67
QUANTITIES	By [illegible]	10/67
	Checked [illegible]	10/67

STATE OF CALIFORNIA
HIGHWAY TRANSPORTATION AGENCY
DEPARTMENT OF PUBLIC WORKS
DIVISION OF HIGHWAYS

BERRYESSA CREEK BRIDGE

FOUNDATION PLAN

PR-37C57-1

BRIDGE NO.	POST MILE	DRAWING NO.	SHEET	OF
37C-57		37C57-2	2	5

REVISION DATES (PRELIMINARY STAGE ONLY): 7/10/67 8/25/7 10/6

WC
CU

Disregard prints bearing earlier revision date: E-37

254

I HEREBY CERTIFY THAT THIS IS A TRUE AND ACCURATE COPY OF THE ABOVE DOCUMENT TAKEN UNDE IN

ClibPDF - www.fastio.com

Revised Railing Width Size, Title Block, Co Note Seq, and Live Loading
10 Aug 66 EJJ

Changed 1'-0" in Sec "AA" to
JTJ 8-25-66

Deleted "Wingwall Elev" Revised: Fillet in "Part Plan-Abut", #4 Bars in "Sec A-A", Reinforcing in "Sec F-F", Title Block
7 Jan 66 EJJ

DIST	COUNTY	ROUTE	POST MILES - TOTAL PROJECT	SHEET NO.	TOTAL SHEETS
04	SCl, Alg	680	M 7.2 / R6.8	235	363

Chief Bridge Engineer — Civil Engineer — Assistant Engineer

DATE APPROVED April 22, 1968

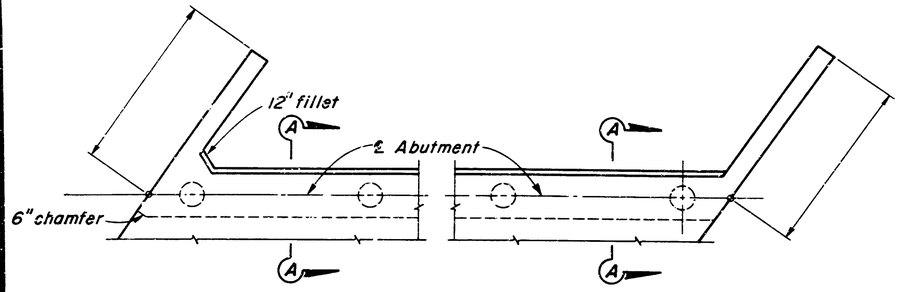

PART PLAN-ABUTMENT
With Skew

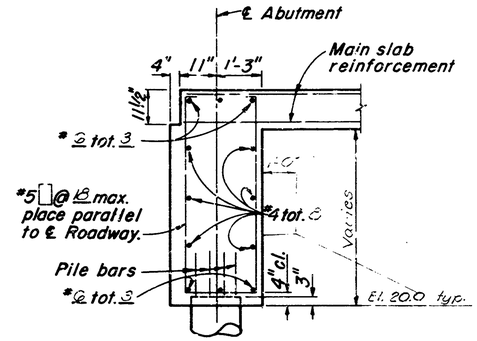

SECTION A-A

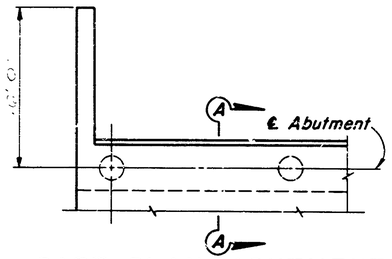

PART PLAN-ABUTMENT
No Skew

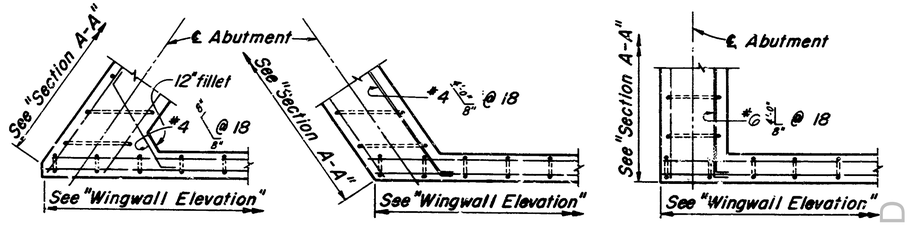

SECTIONS F-F
With Skew No Skew

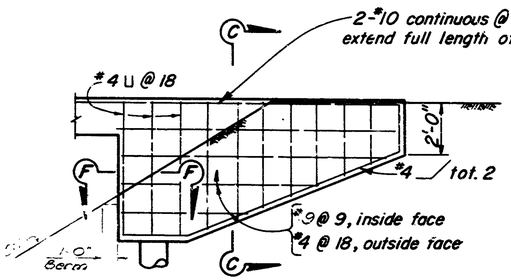

WINGWALL ELEVATION
Curb and Railing not shown

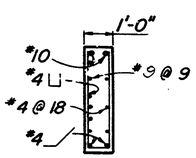

SECTION C-C

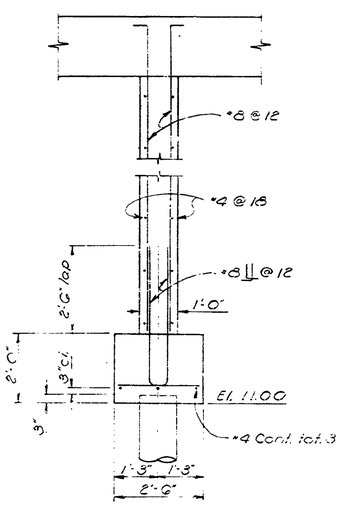

SECTION THRU PIER
½" = 1'-0"

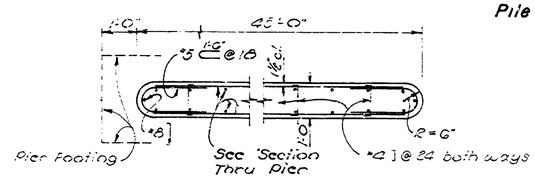

SECTION THRU PIER STEM
½" = 1'-0"

LIVE LOADING: HS 20-44 & ALTERNATIVE

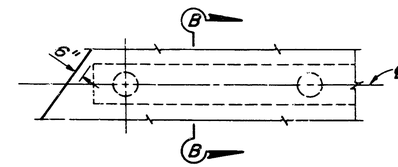

PART PLAN-BENT
With Skew

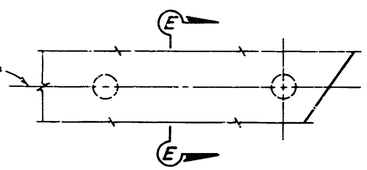

PART PLAN-BENT
With Skew

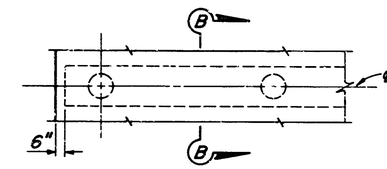

PART PLAN-BENT
No Skew

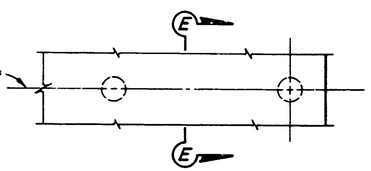

PART PLAN-BENT
No Skew

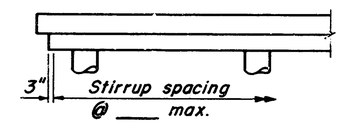

PART ELEVATION-BENT

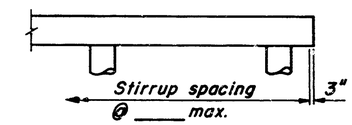

PART ELEVATION-BENT

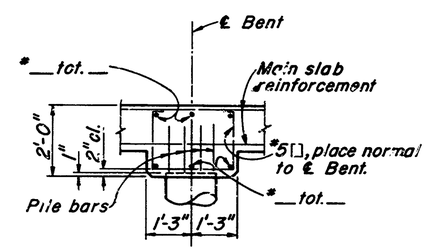

SECTION B-B

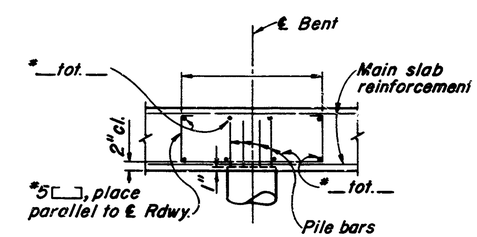

SECTION E-E

No As Built Changes
AS BUILT
CORRECTIONS BY R. Ogata - M.G.
CONTRACT NO. 04-119504
DATE 11-9-70 / 4-8-71

AS BUILT PLANS
Contract No. 04-119504
Date Completed
Document No. 1 0003891

STANDARD DRAWING
Submitted by: G. Sanders
DESIGN: R. Ogata 1-66
DETAILS: R. Ogata 1-66
Approval Recommended: 1-31-66
Approved: R. C. Blake
Chief Bridge Engineer
Chief Bridge Engineer
Chief Bridge Engineer
6129

1/66 — STATE OF CALIFORNIA TRANSPORTATION AGENCY DEPARTMENT OF PUBLIC WORKS DIVISION OF HIGHWAYS — XS-12-37

BERRYESSA CREEK BRIDGE

ABUTMENT AND PIER DETAILS

BRIDGE NO.	POST MILE	DRAWING NO.	SHEET	OF
37C-57		37C57-3	3	5

REVISION DATES (PRELIMINARY STAGE ONLY)
7/24/68 8/27 1/15/69

W.O.

Disregard prints bearing earlier revision dates

235

I HEREBY CERTIFY THAT THIS IS A TRUE AND ACCURATE COPY OF THE ABOVE DOCUMENT TAKEN UNDER MY DIRECTION AND CONTROL OF [illegible] TO

CONFORMED

ClibPDF - www.fastio.com

Revised Chart 3-61 RTK

Added Camber Diagram & notes relat. thereto. FWS 5-9-62

Removed notes about longitudinal or transverse slab Const. jt detail 3-19-63 JT

Revised Title Block and use Loading to HS-20-44 22 Sept 65 EJJ

Deleted "Notes". Revised: Steel Anchor note in Longitudinal Sec; Table; Title Block added "Alternative". 7 Jan 66 EJJ

DIST	COUNTY	ROUTE	POST MILES-TOTAL PROJECT	SHEET NO.	TOTAL SHEETS
04	SCl. Ala	680	M 7.2/R6.8	256	363

Bridge Engineer — City Engineer — License No.

Date approved April 22, 1968

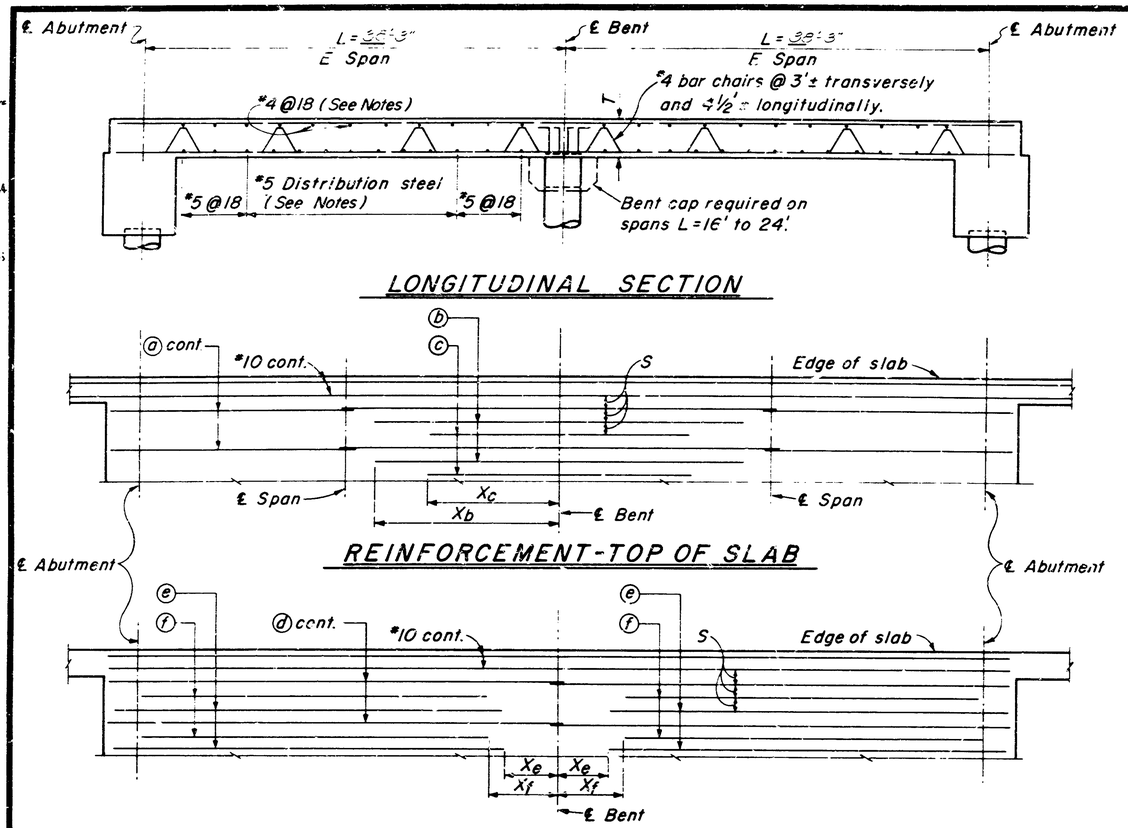

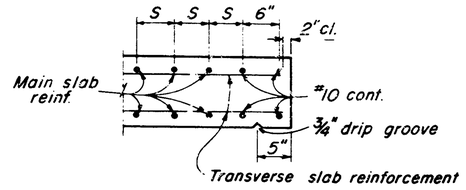

EDGE OF SLAB DETAIL

Curb and railing not shown

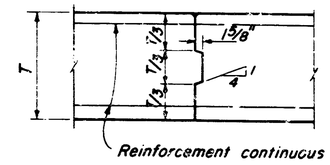

Note: Transverse joints, if used, to be located at ¼ point of span and longitudinal joint to be located at edge of traffic lanes unless otherwise permitted by the Engineer.

LONGITUDINAL OR TRANSVERSE SLAB CONSTRUCTION JOINT

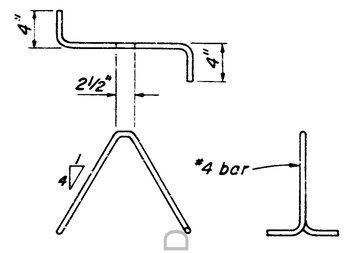

BAR CHAIR DETAIL

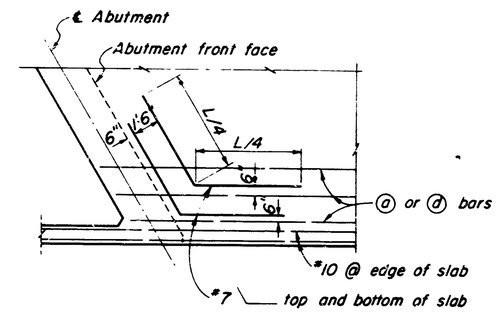

OBTUSE CORNER DETAIL

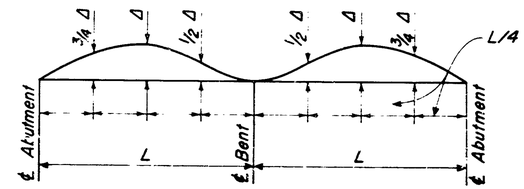

CAMBER DIAGRAM

TOTAL SLAB DEFLECTION DUE TO DEAD LOADS

The total deflection will be reached about 4 years after falsework removal. For values at time of falsework removal divide those shown by 4.

The amount of camber for construction will be determined by the Engineer.

L=Length of Span			
REINFORCEMENT	Top of Slab	ⓐ bars	Size #9
			Length 82'-0"
		ⓑ bars	Size #11
			Length 21'-6"
			Xb 10'-9"
		ⓒ bars	Size #11
			Length 11'-0"
			Xc 5'-6"
	Bottom of Slab	ⓓ bars	Size #9
			Length 81'-0"
		ⓔ bars	Size #9
			Length 31'-6"
			Xe 7'-6"
		ⓕ bars	Size #10
			Length 84'-6"
			Xf 10'-3"
Dist-Steel Spacing			9"
T=Thickness of slab			1'-6¾"
S=Bar Spacing			5½"
Clearance to main reinforcing			2"
Ultimate dead load deflection @ ℄ Span			.06'

NOTES :

Splices in top main bars to be 35 dia. and located near center of span.

Splices in bottom main bars to be 20 dia and located near bent.

Spacing of #4 @ 18 is measured normal to bars.

Spacing of #5 bars in bottom of slab is measured along ℄ roadway. For spacing in center half of span see Table.

Place all transverse bars parallel to bent.

LIVE LOADING: HS-20-44 and ALTERNATIVE

AS BUILT PLANS
Contract No. 04-119504
Date Completed
Document No. 1/0003891

No As Built Changes
AS BUILT
CORRECTIONS BY R. Ogata-M.G.
CONTRACT NO. 04-119504
DATE 11-9-70/4-8-71

STANDARD DRAWING
Submitted for Approval: DESIGN R. C. Blake; DETAILS R. C. Blake; Approval Recommended for: W. T. Hook; Approved: 6724

1/66 — STATE OF CALIFORNIA TRANSPORTATION AGENCY DEPARTMENT OF PUBLIC WORKS DIVISION OF HIGHWAYS — XS-12-38

BERRYESSA CREEK BRIDGE

SLAB DETAILS-2 SPANS

BRIDGE NO. 37C-57 | POST MILE | DRAWING NO. 37C57-4 | SHEET 4 OF 5

REVISION DATES (PRELIMINARY STAGE ONLY) 7/28/67

Disregard prints bearing earlier revision dates

I HEREBY CERTIFY THAT THIS ... OF ...

CONFORMED

ClibPDF - www.fastio.com

DIST.	COUNTY	ROUTE	POST MILES—TOTAL PROJECT	SHEET NO.	TOTAL SHEETS
04	SCl/Ala	680	M7.2/R6.8	207	363

BRIDGE ENGINEER — REGISTERED CIVIL ENGINEER NO. 15585

DATE APPROVED April 22, 1968

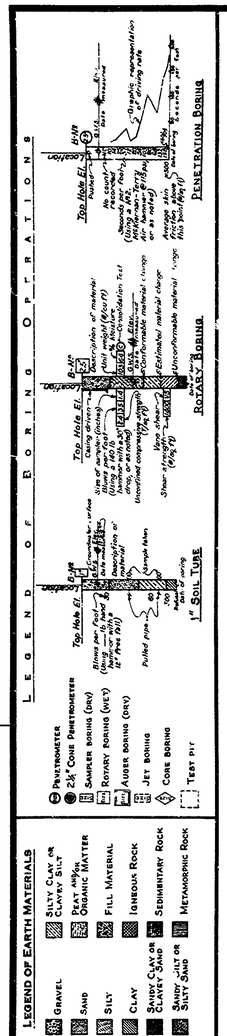

NOTE: Classification of earth material as shown on this sheet is based upon field inspection and is not to be construed to imply mechanical analysis.

FIELD STUDY	By R. Fox	
DRAWN	By K. Gallie	10-14-67
CHECKED	By M. Hershey	10-20-67

Approval Recommended by: Engineering Geologist

BRIDGE DEPARTMENT
ENGINEERING GEOLOGY SECTION

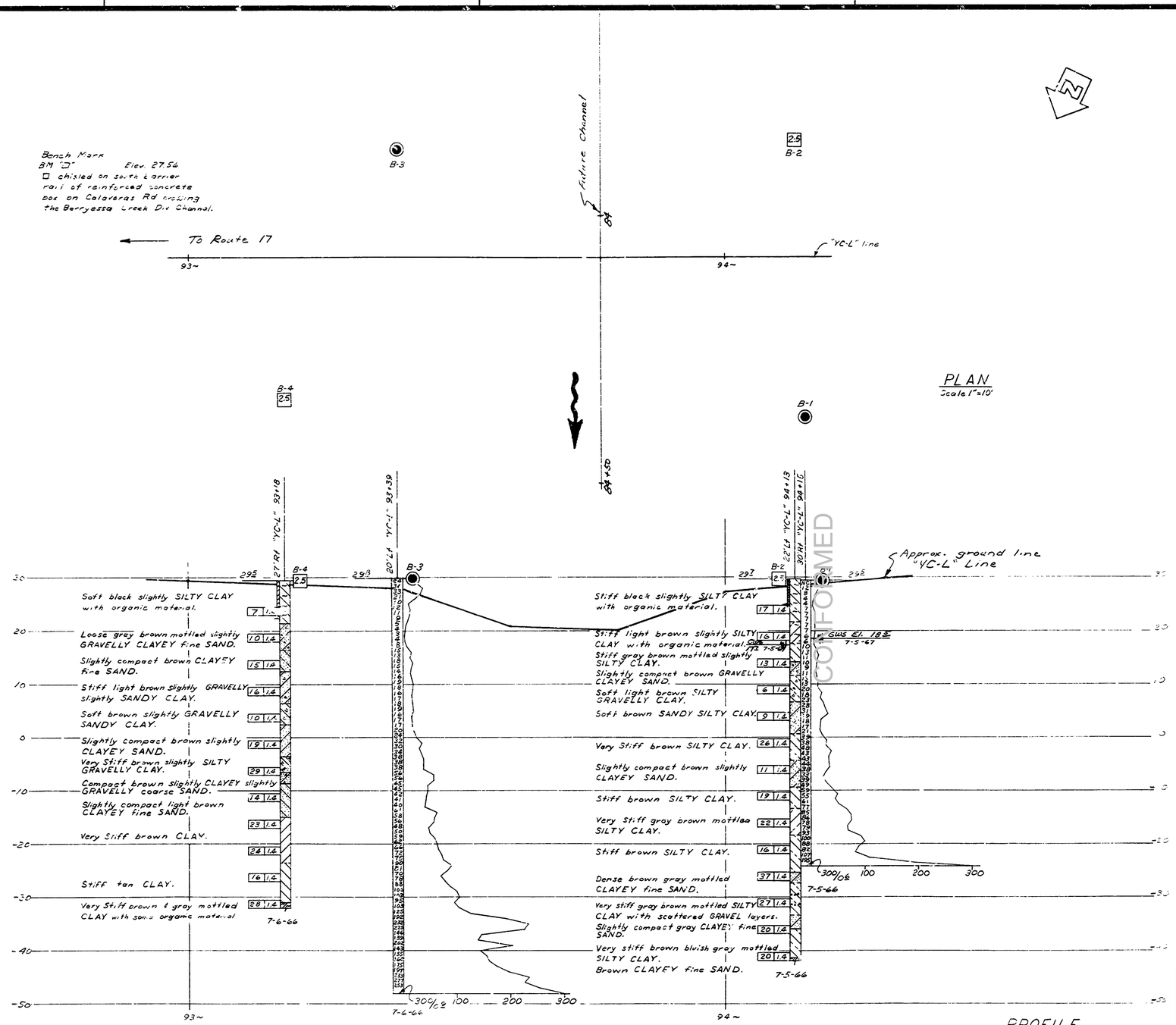

INFORMATION ON ACTUAL FOUNDATION CONDITIONS ENCOUNTERED IS ON FILE IN BRIDGE GEOLOGY SECTION

AS BUILT PLANS
Contract No. 04-119504
Date Completed
Document No. 4 0003891

STATE OF CALIFORNIA
TRANSPORTATION AGENCY
DEPARTMENT OF PUBLIC WORKS
DIVISION OF HIGHWAYS

BERRYESSA CREEK

LOG OF TEST BORINGS

BRIDGE NO.	POST MILE	DRAWING NO.	SHEET	OF
37C-57		37C57-5	5	14

WO 119503
CU 04204

PR-37C57-2
Disregard prints bearing earlier revision dates

REVISION DATES (PRELIMINARY STAGE ONLY)						
10/12/67						

I HEREBY CERTIFY THAT THIS IS A TRUE AND ACCURATE COPY OF THE ABOVE DOCUMENT TAKEN UNDER MY DIRECTION AND CONTROL ON THIS DATE IN SACRAMENTO, CALIFORNIA PURSUANT TO AUTHORIZATION BY THE DIRECTOR OF PUBLIC WORKS.

ClibPDF - www.fastio.com

PROFILE GRADE

NO SCALE

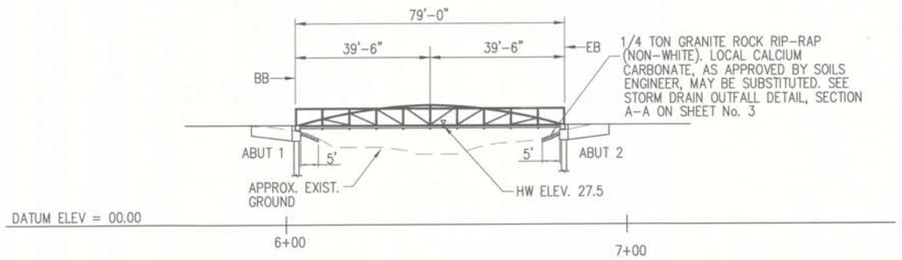

ELEVATION

SCALE: 1"=20'

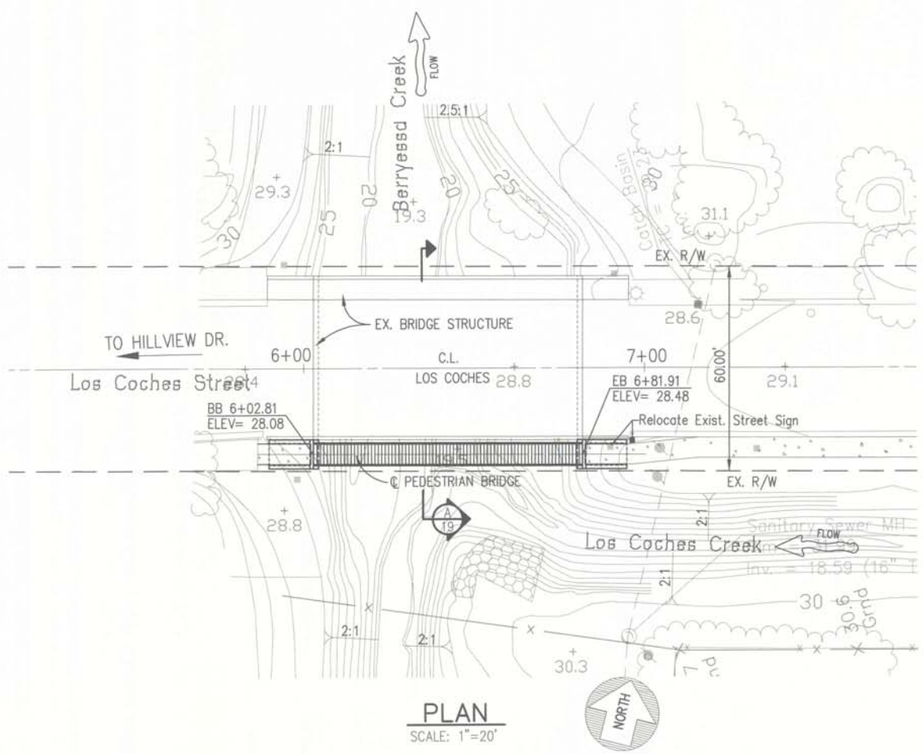

PLAN

SCALE: 1"=20'

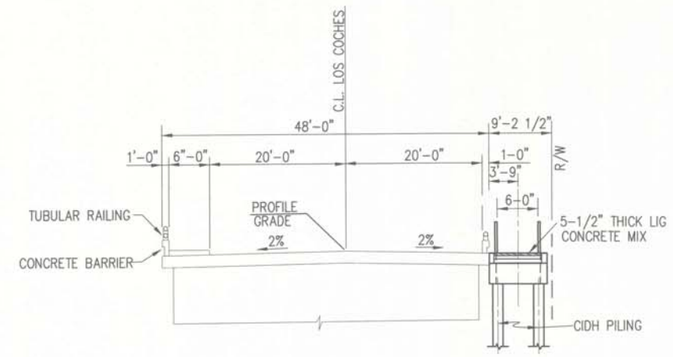

TYPICAL SECTION (A)

SCALE: 1"=10'

NOTES:

1. LIVE LOAD: 100 PSF AND 1000# POINT LOAD
2. SUPERSTRUCTURE DESIGN DEAD LOAD:
   - TRUSS 200 PLF
   - LIGHT WEIGHT PCC DECK (5-1/2" MIN. MAXIMUM) △ 330 PLF
3. SEISMIC: 0.[illegible]g; DEPTH TO ROCK > 85'
4. △ SOIL PARAMETERS:
   - ACTIVE = [illegible] PCF
   - PASSIVE = 250 PCF
   - u = 0.35
   - Fb = 200 PSF
   - FOR PILES,
     - ISOLATION FACTOR = 2
     - MIN. SPACING = 3d(PILE DIAMETER)
     - SKIN FRICTION = 500 PSF
     - a = 0.46g, and ALLUVIUM(DEPTH TO BEDROCK) > 85'
5. △ CONTRACTOR SHALL PROVIDE STEEL TRUSS SHOP DRAWINGS FOR REVIEW AND APPROVAL 3 WEEKS PRIOR TO ISSUANCE OF BUILDING PERMIT

CONCRETE PILE DATA

LOCATION	DIAMETER	CUT OFF ELEV.	SPECIFIED TOP ELEV.
ABUTMENT 1	18"	23.83	7.83
ABUTMENT 2	18"	24.23	8.23

REGISTERED PROFESSIONAL ENGINEER MICHAEL R. COOPER 28072 Exp. 3/31/03 CIVIL STATE OF CALIFORNIA

ABREVIATIONS:

BB	BEGIN BRIDGE
EB	END BRIDGE
PSF	POUNDS PER SQUARE FOOT
PLF	POUNDS PER LINEAL FOOT
g	GRAVITY
CONT.	CONTINUOUS
MAX.	MAXIMUM

Record Drawings
To be completed prior to acceptance of work by the City
Signature & Seal: Michael R. Cooper Date: 3/31/03
P.E. No. 28072 Exp.
Public Works Inspector: N/A
Public Improvements officially Accepted by the City Council on:

SOIL ENGINEER:
ENGEO INCORPORATED
2401 CROW CANYON ROAD, SUITE 200
SAN RAMON, CA 94523
CONTACT: JULIA MORIARTY
(510) 838-1600

REGISTERED PROFESSIONAL ENGINEER FRANK G. FONG No. 27852 Exp. 3/31/2002 CIVIL STATE OF CALIFORNIA

CONFORMED

Ruggeri - Jensen Azar & Associates
ENGINEERS • PLANNERS • SURVEYORS
100 N. MILPITAS BLVD., SUITE 160, • MILPITAS, CA 95035
PHONE: (408) 934-1388 • FAX: (408) 934-1288

GENERAL PLAN
PEDESTRIAN BRIDGE AT BERRYESSA CREEK
SINCLAIR HORIZONS – TRACT 9018
MILPITAS, CALIFORNIA
FOR THE MISSION PEAK COMPANY, INC.

REVISIONS

NUM	DATE	BY	DESCRIPTION	CITY ENGR. APPR.	DATE
△	6/30	TP	REVISIONS PER BUILDING DIVISION COMMENTS		

CITY OF MILPITAS
PUBLIC WORKS DEPARTMENT
ENGINEERING DIVISION

APPROVED:
City Engineer — Date
Any changes to public improvements shall be approved by the City Engineer.
Recommended for approval: Fire Dept. — Date; Engineering — Date

Project No. 3033
File No. 2-918
Sheet 19 of 20

2-918 20/21

UPDATED: 07/02/1998 10:16am
ACAD FILE: 62031119.dwg

RJA JOB NUMBER: 962031

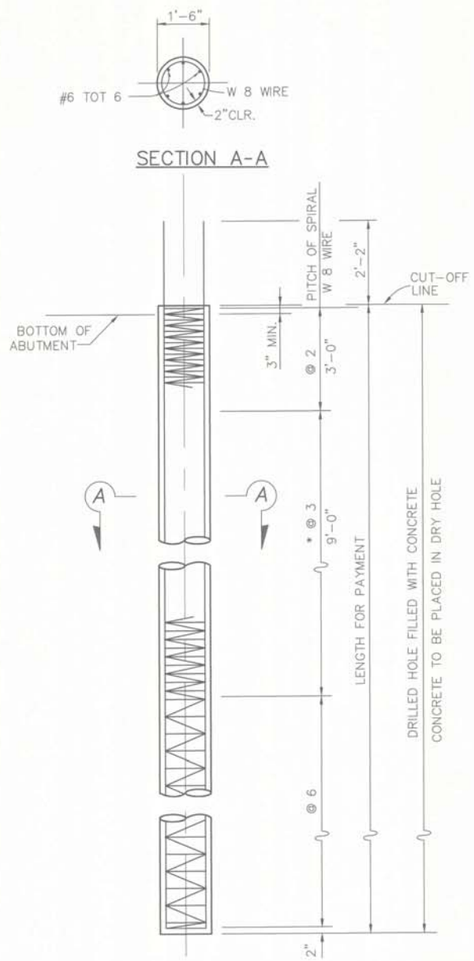

ELEVATION

* @ 2 AT OPTION OF CONTRACTOR

PILE NOTES:

1. LAPPED SPLICES IN SPIRAL PILE REINFORCEMENT SHALL BE LAPPED AT LEAST 80 WIRE DIAMETERS. SPIRAL PILE REINFORCEMENT AT SPLICES AND AT END SHALL BE TERMINATED WITH A 135° HOOK WITH 6" TAIL HOOKED AROUND A LONGITUDINAL BAR.

PILE DETAILS
SCALE: 1/2" = 1'-0"

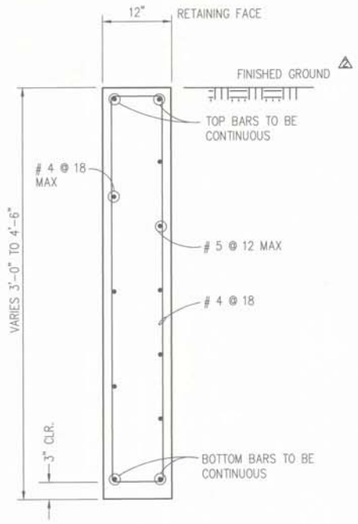

SECTION C-C
SCALE: 1" = 1'-0"

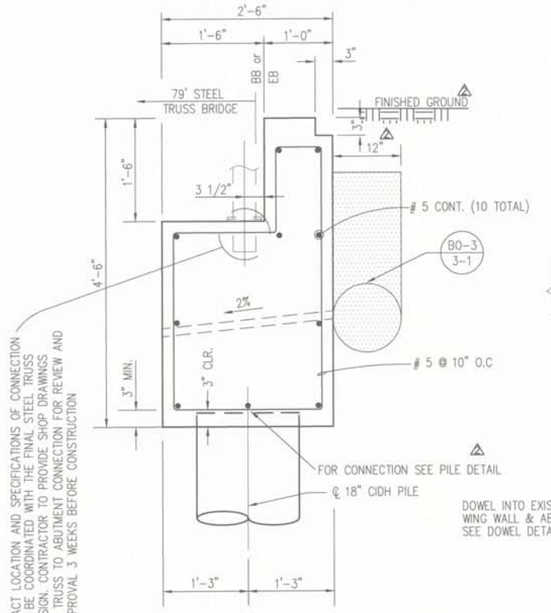

SECTION B-B
SCALE: 1" = 1'-0"

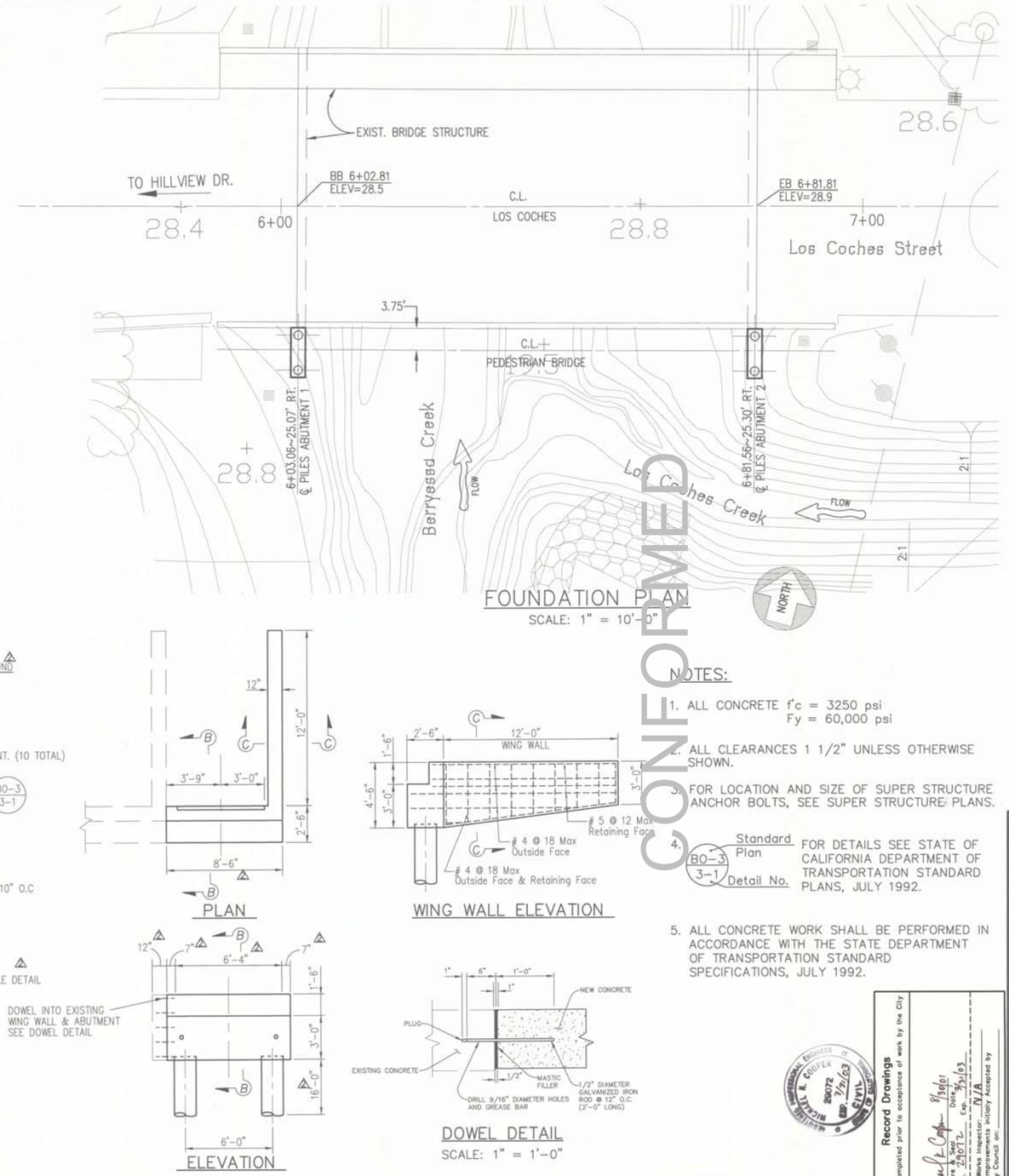

ABUTMENT No. 2
(Abutment No. 1 Mirror Image)
SCALE: 1/4" = 1'-0"

NOTES:

1. ALL CONCRETE f'c = 3250 psi
   Fy = 60,000 psi
2. ALL CLEARANCES 1 1/2" UNLESS OTHERWISE SHOWN.
3. FOR LOCATION AND SIZE OF SUPER STRUCTURE ANCHOR BOLTS, SEE SUPER STRUCTURE PLANS.
4. BO-3 / 3-1 (Standard Plan / Detail No.) FOR DETAILS SEE STATE OF CALIFORNIA DEPARTMENT OF TRANSPORTATION STANDARD PLANS, JULY 1992.
5. ALL CONCRETE WORK SHALL BE PERFORMED IN ACCORDANCE WITH THE STATE DEPARTMENT OF TRANSPORTATION STANDARD SPECIFICATIONS, JULY 1992.

CONFORMED

Record Drawings
To be completed prior to acceptance of work by the City
Signature & Seal: P.E. No. 27872 Exp. 3/31/03 Date 8/30/01
Public Works Inspector: N/A
Public improvements initially Accepted by the City Council on: ____

MICHAEL R. COOPER No. 28072 Exp. 3/31/03 CIVIL STATE OF CALIFORNIA

REGISTERED PROFESSIONAL ENGINEER FRANK G. FONG No. 27892 Exp. 3/31/03 CIVIL STATE OF CALIFORNIA

Ruggeri - Jensen - Azar & Associates
ENGINEERS • PLANNERS • SURVEYORS
100 N. MILPITAS BLVD., SUITE 160, • MILPITAS, CA 95035
PHONE (408) 934-1288 • FAX (408) 934-1288

ABUTMENT-WINGWALL-PILE DETAILS
PEDESTRIAN BRIDGE AT BERRYESSA CREEK
SINCLAIR HORIZONS - TRACT 9018
MILPITAS, CALIFORNIA
FOR THE MISSION PEAK COMPANY, INC.

NUM	DATE	BY	REVISIONS DESCRIPTION	CITY ENGR APPR.	DATE
1	6/30	TP	COMMENT		

CITY OF MILPITAS
PUBLIC WORKS DEPARTMENT
ENGINEERING DIVISION

APPROVED:
City Engineer Date
Any changes to public improvements shall be approved by the City Engineer.
Recommended for approval: Fire Dept. Date
Engineering Date

Project No. 3033
File No. 2-918
Sheet 20 of 20

2-918 4/21

UPDATED: 07/02/1998 10:16am
ACAD FILE: 62031/20.dwg

RJA JOB NUMBER: 962031

Appendix I

As-Built Plans

Ames Avenue and Yosemite Drive Bridges

CONFORMED

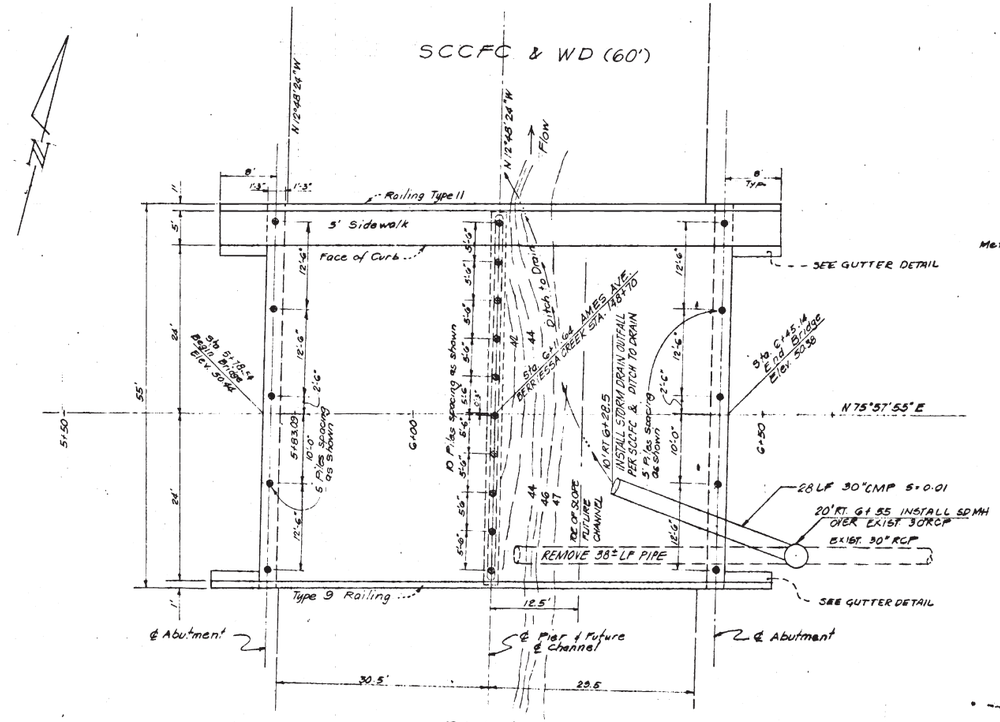

PLAN
SCALE: 1"=10'

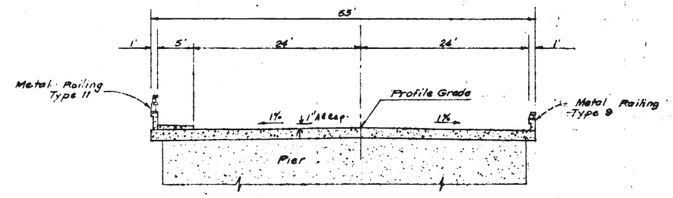

TYPICAL SECTION
SCALE 1"=10'

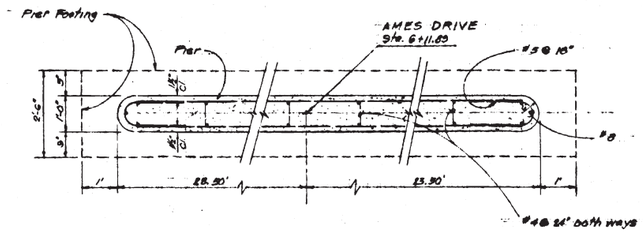

SECTION THRU PIER STEM
SCALE 1/2"=1'-0"

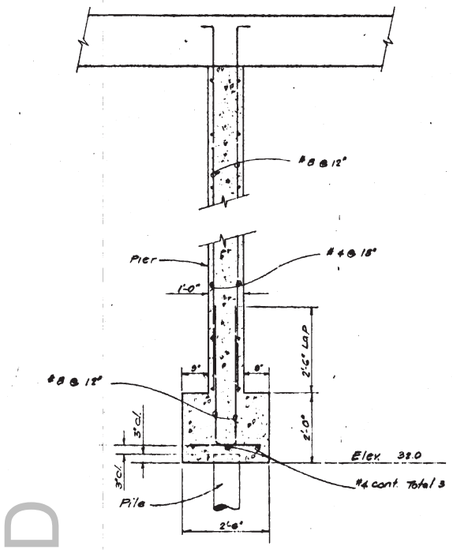

SECTION THRU PIER
SCALE: 1/2"=1'-0"

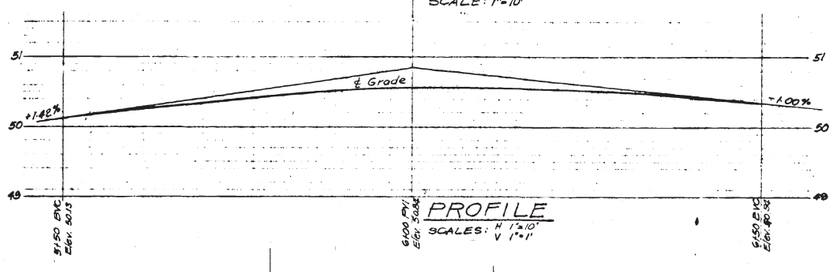

PROFILE
SCALES: H 1"=10' V 1"=1'

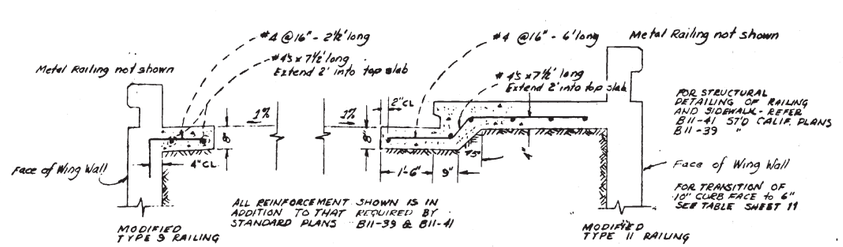

GUTTER DETAIL
SCALE: 1/2" = 1'

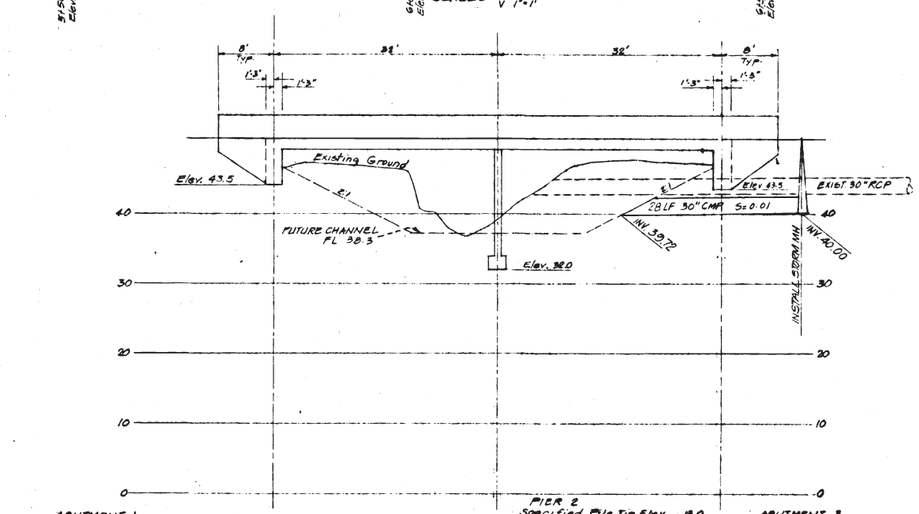

ABUTMENT 1
Specified Pile Tip Elev. = -7.0
Estimated Pile Tip Elev = -12.0

PIER 2
Specified Pile Tip Elev. = -13.0
Estimated Pile Tip Elev. = -18.0

ABUTMENT 3
Specified Pile Tip Elev = -7.0
Estimated Pile Tip Elev = -12.0

ELEVATION
SCALE: 1"=10'

STANDARD PLANS

The following sheets are included as shown in State of California Division of Highways Standard Plans dated January 1971.

B 2-1 Concrete Pile Details (See Note* Below)
B 11-39 Metal Railing Type 9
B 11-41 Metal Railing Type 11
B 11-43 Metal Railing Details - Type 9 & 11

GENERAL NOTES

Design HS 20-44 and alternative stresses
f_s = 24000 psi, f_c = 1300 psi, n = 10
Pile loading 45-ton concrete

APPROXIMATE QUANTITIES

Furnish Concrete Piling (Class II)	1055 LF
Driving Concrete Piles	20 Ea.
Metal Railing (Type 9)	80 LF
Metal Railing (Type 11)	80 LF

FINAL QUANTITIES

Concrete (Structure)	311 CY
Bar Reinforcing Steel	50,000 Lbs.

* NOTE:

Alternative "U" is deleted from Pile Options as shown on Sheet B 2-1 Concrete Pile Details.

Main Supports in falsework shall run north and south to accomodate vertical curve

APPROVED: Wesley D. Smith
FILE NUMBER: 2-325

CONFORMED

BISSELL & KARN, INC.
CIVIL ENGINEERS
2551 MERCED STREET · SAN LEANDRO, CALIFORNIA · 94577 · (415) 483-2170

AMES AVENUE BRIDGE
Constructed w/Ames Ave project

LOCAL IMPROVEMENT DISTRICT NO. 4
MILPITAS — CALIFORNIA
APPROVED: [illegible] RCE CIVIL ENGINEER NO. 9321
DATE: MAY 16, 1972 JOB NO. 5194

SCALE	DATE	DRAWN	CHECKED
AS SHOWN	3/14/72	E.I.T.	LL / R.C.

REVISIONS

SHEET NO. 27 OF 33 SHEETS

AS-BUILT

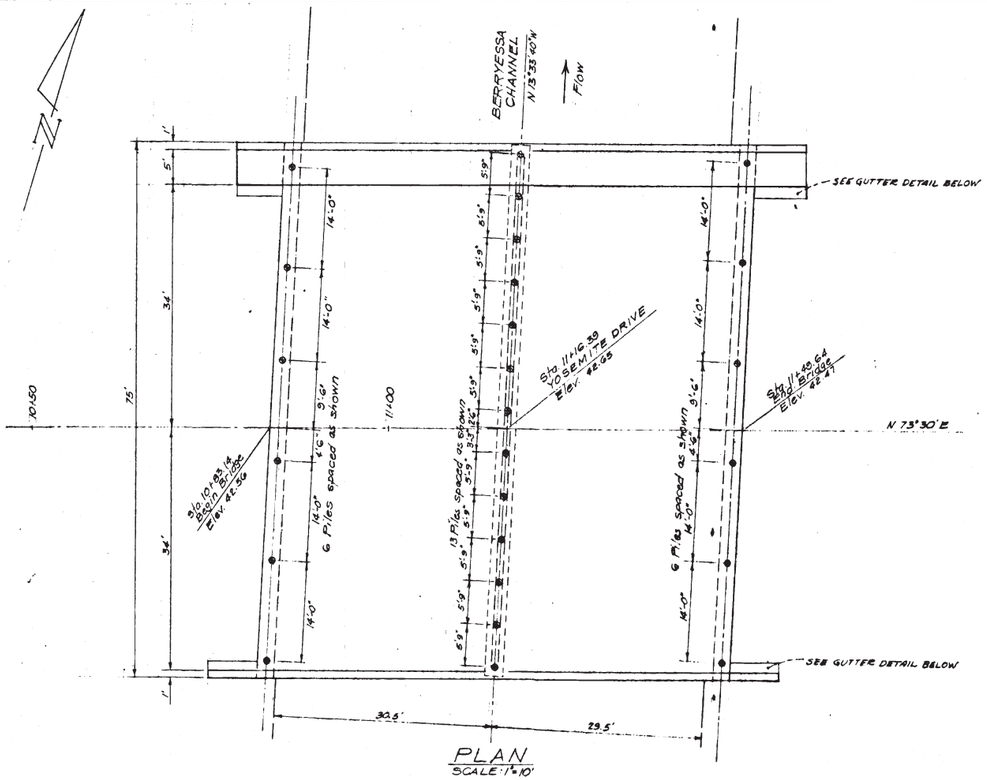

PLAN
SCALE: 1"=10'

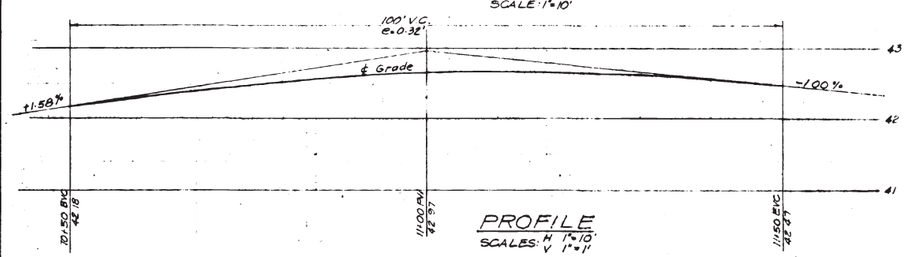

PROFILE
SCALES: H 1"=10'
V 1"=1'

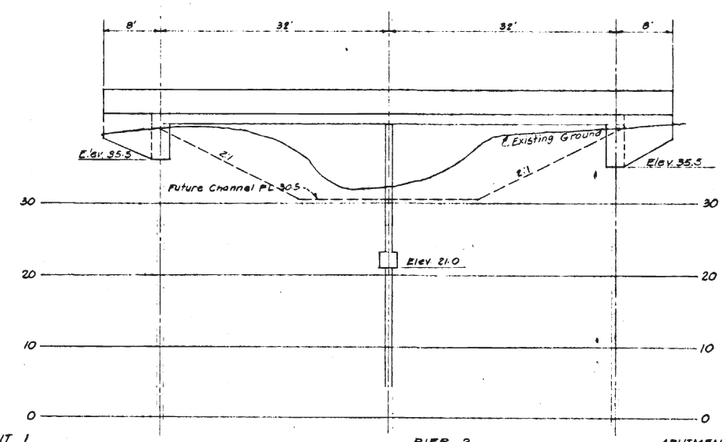

ABUTMENT 1
Specified Pile Tip Elev. = -15.0
Estimated Pile Tip Elev. = -20.0

PIER 2
Specified Pile Tip Elev. = -24.0
Estimated Pile Tip Elev. = -29.0

ABUTMENT 3
Specified Pile Tip Elev. = -15.0
Estimated Pile Tip Elev. = -20.0

ELEVATION
SCALE: 1"=10'

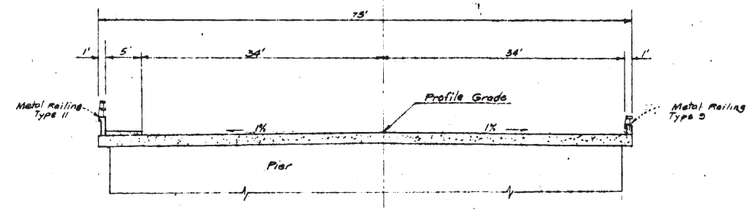

TYPICAL SECTION
SCALE: 1"=10'

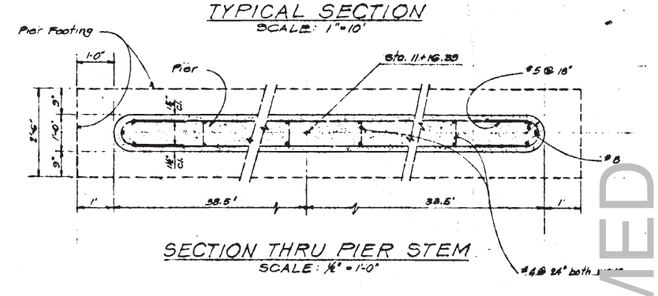

SECTION THRU PIER STEM
SCALE: 1/2" = 1'-0"

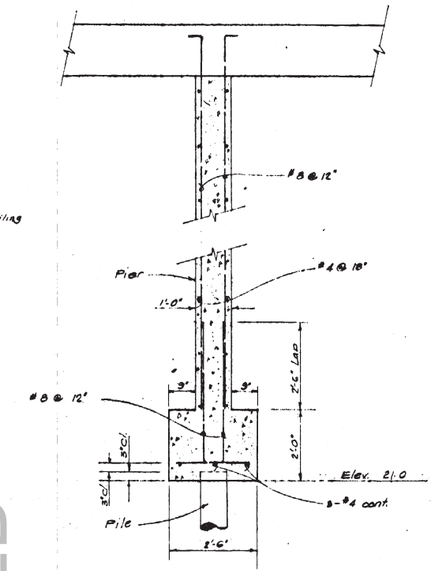

SECTION THRU PIER
SCALE: 1/2" = 1'-0"

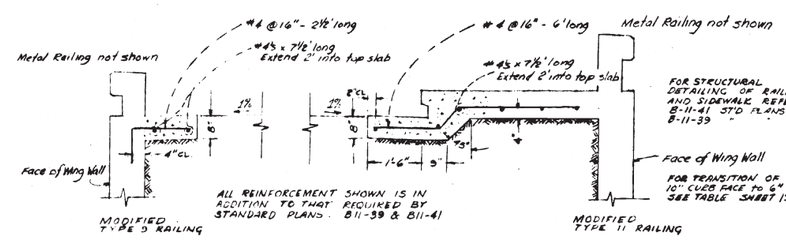

CUTTER DETAIL
SCALE: 1/2" = 1'

STANDARD PLANS

The following sheets are included as shown in State of California Division of Highways Standard Plans dated January 1971.

- B2-1 Concrete Pile Details (See Note* Below)
- B11-39 Metal Railing Type 9
- B11-41 Metal Railing Type 11
- B11-43 Metal Railing Details - Type 9 & 11

GENERAL NOTES

Design HS 20-44 and alternative stresses
f_c = 24000 psi, f_s = 1300 psi, n=10
Pile loading 45-ton concrete

APPROXIMATE QUANTITIES

Furnish Concrete Piling (Class II)	1322	LF
Driving Concrete Piles	25	EA
Metal Railing (Type 9)	80	LF
Metal Railing (Type 11)	80	LF

FINAL QUANTITIES

Concrete (Structure)	404	CY
Bar Reinforcing Steel	67,830	LBS.

*NOTE
Alternative "U" is deleted from Pile Options as shown on Sheet B2-1 Concrete Pile Details.

APPROVED: Wesley D. Smith
FILE NUMBER: 2-325

CONFORMED

BISSELL & KARN, INC.
CIVIL ENGINEERS
2551 MERCED STREET · SAN LEANDRO, CALIFORNIA · 94577 · (415) 483-2170

YOSEMITE DRIVE BRIDGE

LOCAL IMPROVEMENT DISTRICT NO 4
MILPITAS — CALIFORNIA

APPROVED: [illegible] RCE CIVIL ENGINEER NO. 9821
DATE: MAY 16, 1972 JOB NO. 5194

SCALE AS NOTED	DATE 3/16/72	DRAWN E.I.T.	CHECKED L.L./R.C.

REVISIONS

SHEET NO. 28 OF 33 SHEETS

AS-BUILT

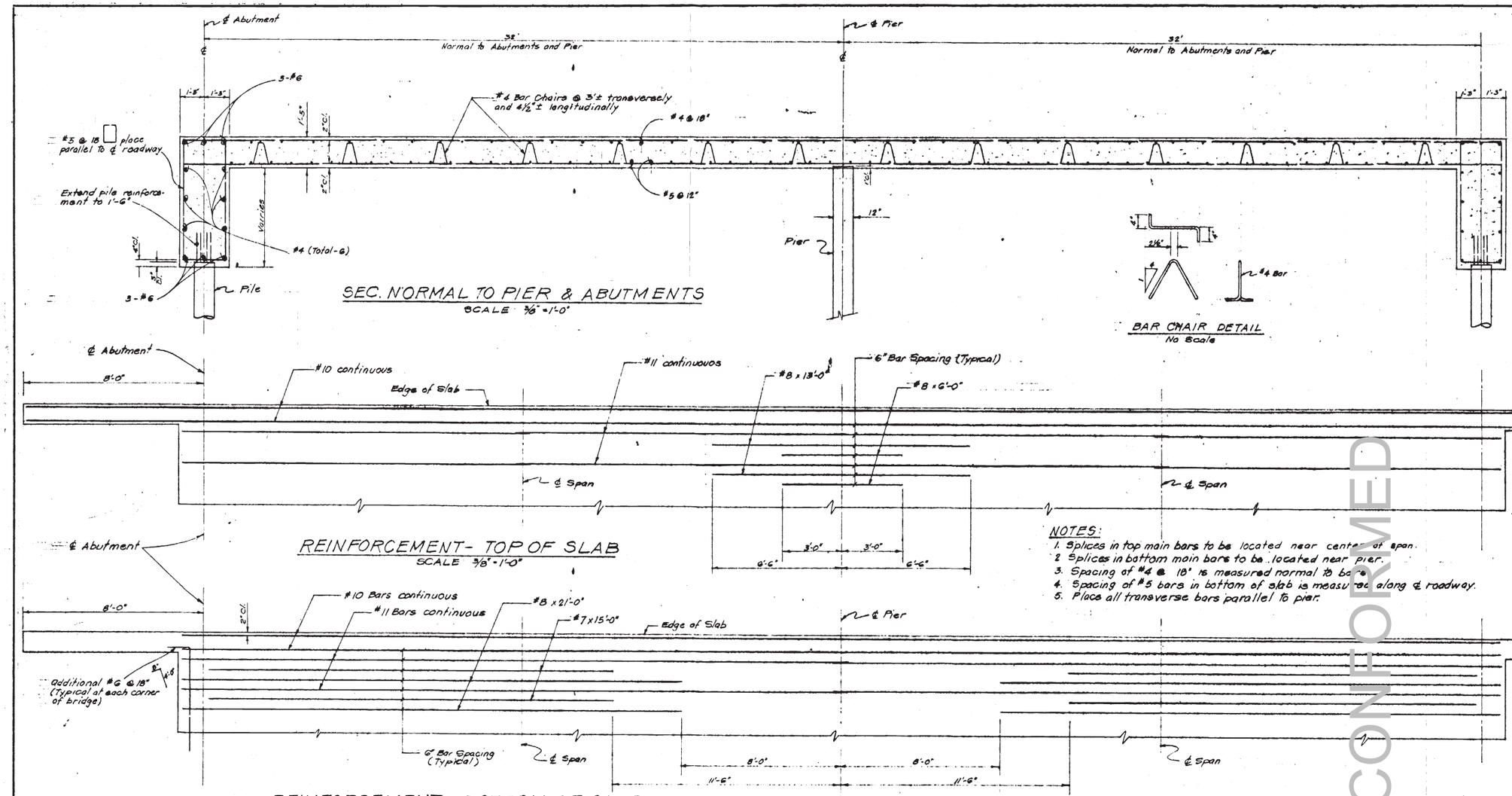

BAR CHAIR DETAIL
No Scale

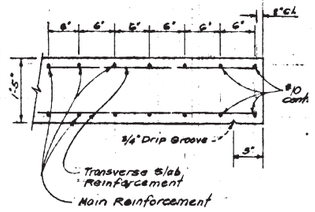

EDGE OF SLAB DETAIL
NO SCALE
(CURB & RAILING NOT SHOWN)

NOTES:
1. Splices in top main bars to be located near center of span.
2. Splices in bottom main bars to be located near pier.
3. Spacing of #4 @ 18" is measured normal to bars.
4. Spacing of #5 bars in bottom of slab is measured along ℄ roadway.
5. Place all transverse bars parallel to pier.

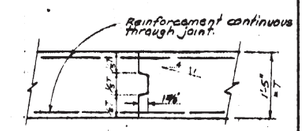

LONGITUDINAL SLAB CONST. JOINT
NO SCALE

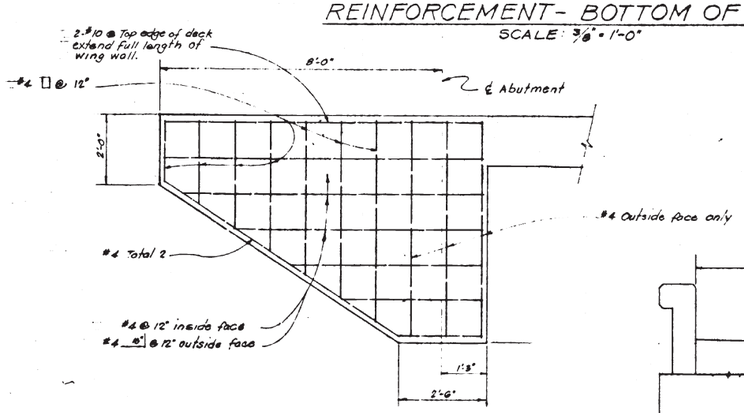

WINGWALL ELEVATION
SCALE ½"=1'-0"

BAR SPLICE LENGTH

Bar Size	#4	#5	#6	#7	#8	#9	#10	#11
Typical Bar	18"	23"	27"	32"	36"	41"	51"	57"
Top bars in main span	26"	32"	38"	45"	51"	58"	72"	80"

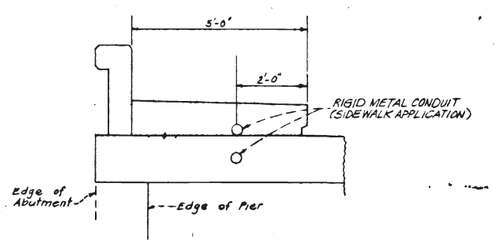

TYPICAL CONDUIT LOCATION
NOT TO SCALE

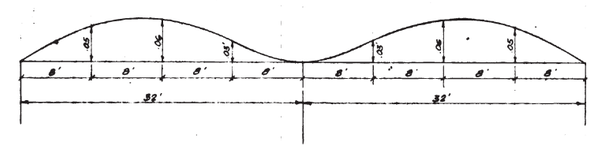

CAMBER DIAGRAM
TOTAL SLAB DEFLECTION DUE TO DEAD LOADS

Total deflection will be reached about 4 years after falsework removal. For values at time of falsework removal divide those shown by 4.
The amount of camber for construction will be determined by the Engineer.

CONFORMED

APPROVED: Wesley D. Smith
FILE NUMBER: C-325

BISSELL & KARN, INC.
CIVIL ENGINEERS
2551 MERCED STREET · SAN LEANDRO, CALIFORNIA · 94577 · (415) 483-2170

GENERAL BRIDGE DETAIL

LOCAL IMPROVEMENT DISTRICT NO. 4
MILPITAS — CALIFORNIA
APPROVED: [signature] REG. CIVIL ENGINEER NO. 9221
DATE: MAY 16, 1972 JOB NO. 5194

SCALE	DATE	DRAWN	CHECKED
AS NOTED	3/14/72	E.I.T.	LL/R.C.

REVISIONS

SHEET NO. 29 OF 93 SHEETS

AS-BUILT

AS-BUILT

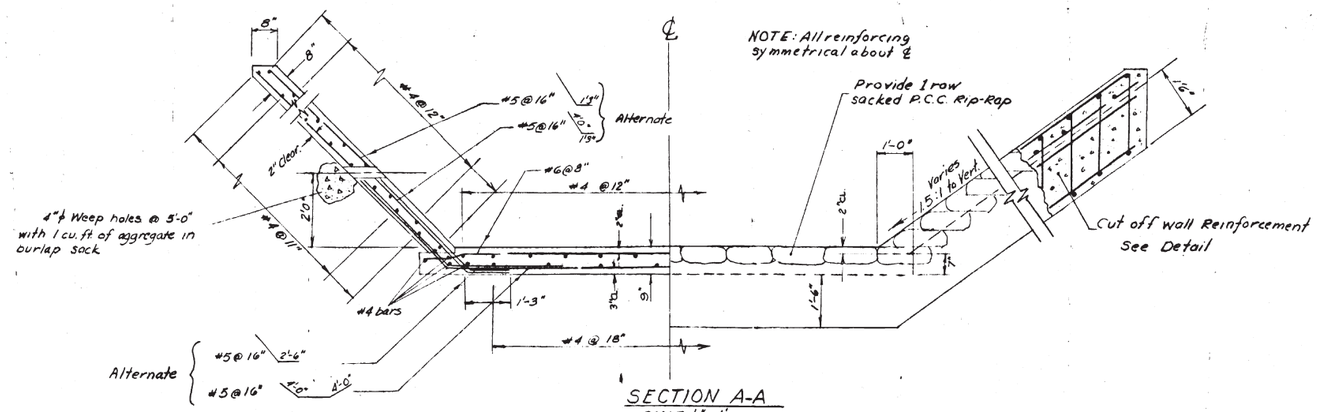

SECTION A-A
SCALE: 1/2" = 1'

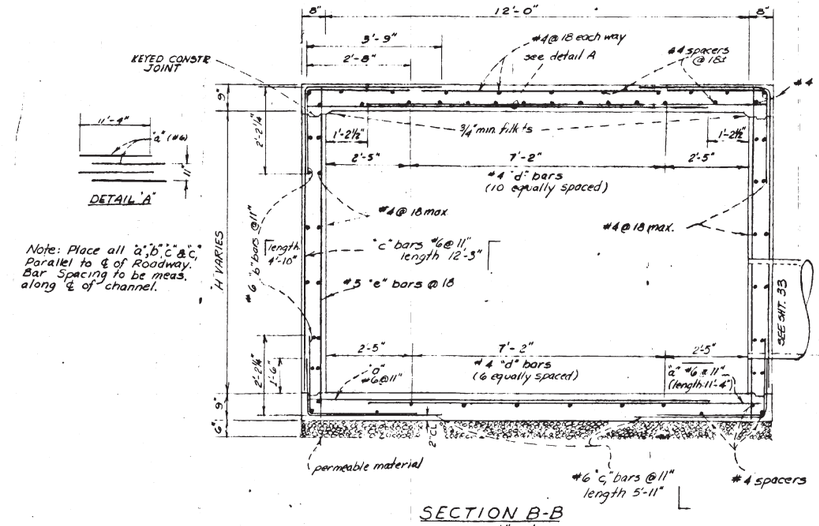

Note: Place all "a", "b", "c" & "e" Parallel to ℄ of Roadway. Bar Spacing to be meas. along ℄ of channel.

SECTION B-B
SCALE: 1/2" = 1'

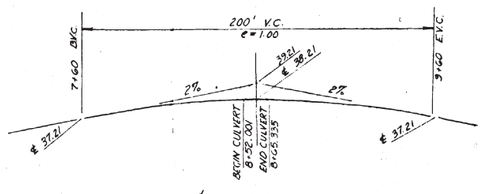

℄ PROFILE
"A" STREET
NO SCALE

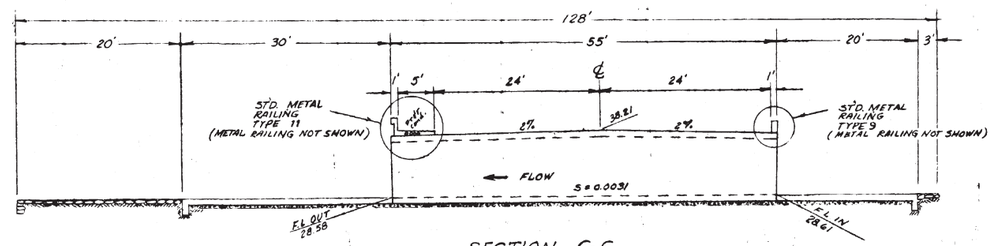

SECTION C-C
SCALE: 1" = 10'

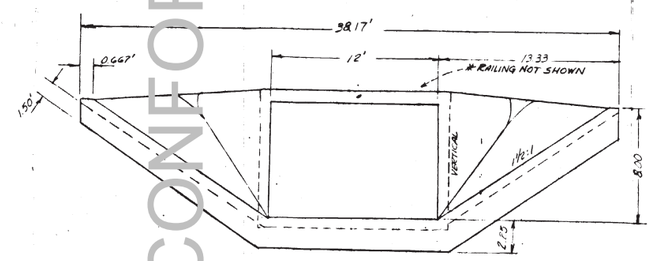

SECTION D-D
SCALE: 1" = 5'

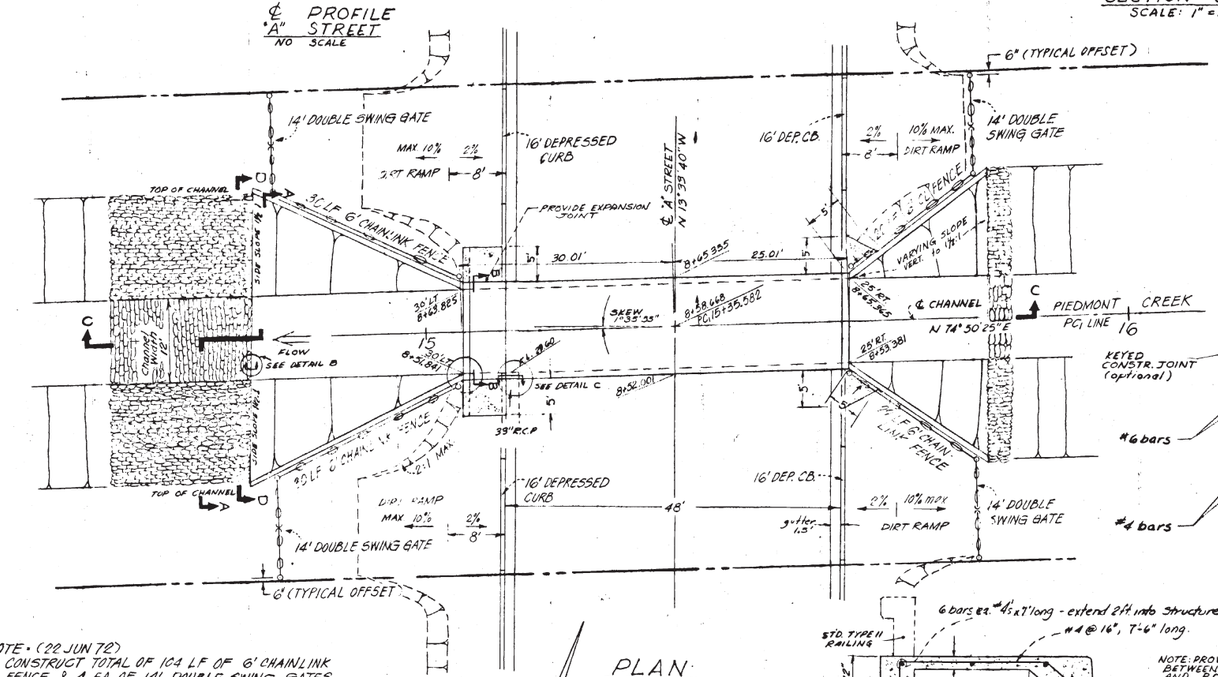

PLAN
SCALE 1" = 10'

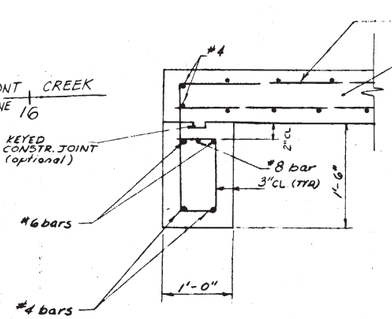

DETAIL B
SCALE 1" = 1'-0"
CUT OFF WALL

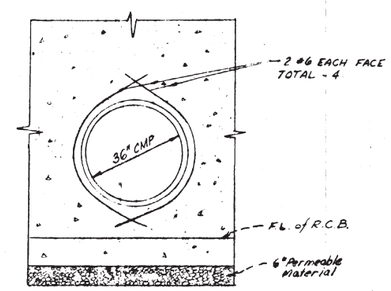

DETAIL C
SCALE 1/2" = 1'

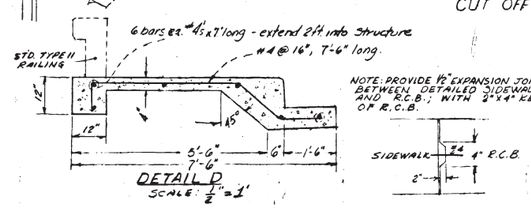

NOTE: PROVIDE 1/2" EXPANSION JOINT MATERIAL BETWEEN DETAILED SIDEWALK @ LEFT AND R.C.B.; WITH 2"x4" KEY @ FACE OF R.C.B.

DETAIL D
SCALE: 1/2" = 1'

NOTE: (22 JUN 72)
CONSTRUCT TOTAL OF 104 LF OF 6' CHAINLINK FENCE & 4 EA OF 14' DOUBLE SWING GATES.

CONSTRUCT 4 EA 16' DEPRESSED CURBS & 4 EA GRADED DIRT RAMPS AS SHOWN.

NOTE: REFER CALIFORNIA STANDARD PLANS P93 "116-117 Jan. '71 Edition
- Metal Railing (Type 9) ..... 14 LF
- Metal Railing (Type 11) ..... 14 LF

R.C.B.
APPROXIMATE QUANTITIES

FINAL QUANTITIES
- Concrete Structure ..... 68 C.Y.
- Bar Reinforcing Steel ..... 13,630 LB
- Permeable Material ..... 12 C.Y.

CHANNEL
APPROXIMATE QUANTITIES
- Sacked P.C.C. ..... 24 C.Y.

FINAL QUANTITIES
- * Concrete Structure ..... 55.8 C.Y.
- Bar Reinforcing Steel ..... 9,700 LB
- Permeable Material ..... 14 C.Y.

* Includes slope protection & additional sidewalk as shown

Note: The Final R.C.B. Quantities include railing and sidewalk over the structure

APPROVED: [signature]
FILE NUMBER: 2-325

CONFORMED

BISSELL & KARN, INC.
CIVIL ENGINEERS
2551 MERCED STREET · SAN LEANDRO, CALIFORNIA · 94577 · (415) · 483-2170

SINGLE REINF. CONCRETE BOX CULVERT

LOCAL IMPROVEMENT DISTRICT NO. 4
MILPITAS — CALIFORNIA

APPROVED: [signature] REG. CIVIL ENGINEER NO. 3821
DATE: MAY 16, 1972 JOB NO. 5194

SCALE	DATE	DRAWN	CHECKED
AS NOTED		M.T.S.	R.J.C.

REVISIONS: 22 JUN 72 - 4 W.L.

SHEET NO. 30 OF 33 SHEETS

AS-BUILT

AS-BUILT

Appendix J

Channel Improvements – Construction and Maintenance Agreement

CONFORMED

UP Folder No.: 02967-19

CHANNEL IMPROVEMENT
CONSTRUCTION & MAINTENANCE AGREEMENT

Mile Post: 10.7 to 11.7, Opposite Railroad's Milpitas Industrial Lead
Location: Milpitas, Santa Clara County, California

THIS CHANNEL IMPROVEMENT CONSTRUCTION & MAINTENANCE AGREEMENT (this "**Agreement**") is made and entered into as of the 27th day of May, 2016 (the "**Effective Date**") by and among **UNION PACIFIC RAILROAD COMPANY**, a Delaware corporation, ("**Railroad**"), **STANDARD REALTY AND DEVELOPMENT COMPANY**, a California corporation ("**Standard**") and **SANTA CLARA VALLEY WATER DISTRICT**, a special district created by the California legislature (the "**District**").

RECITALS:

A. Standard is a wholly owned subsidiary of Railroad.

B. In connection with the District's Berryessa Creek Flood Risk Management Project, the District desires to construct and maintain certain channel improvements (the "**Project**") in the area generally located between East Calavares Boulevard and Montague Expressway in Milpitas, Santa Clara County, California, at or near Railroad's Mile Post 10.7 to Mile Post 11.7 opposite Railroad's Milpitas Industrial Lead, as such Project area is generally depicted on the print marked **Exhibit "A"** attached hereto (the "**Project Area**").

C. Pursuant to that certain (i) Grant of Easement dated November 2, 1978, between Standard and the District and (ii) Grant of Easement dated November 21, 1978, between Standard and the District (collectively, the "**Existing Standard Easement Deeds**"), the District has an easement (the "**Existing Standard Easement**") in, upon, over and across certain property located within the Project Area and owned by Standard for the purposes of flood control and/or storm water drainage, as such property is more particularly described in the Existing Standard Easement Deeds (the "**Existing Standard Easement Property**").

D. Pursuant to that certain (i) Deed dated April 7, 1955, among Francis L. Wrigley and Beatrice C. Wrigley, as predecessors in interest to Railroad, and the District and (ii) Deed dated March 15, 1955, between The Western Pacific Railroad Company, as predecessor in interest to Railroad, and the District (collectively, the "**Existing Railroad Easement Deeds**" and together with the Existing Standard Easement Deeds, collectively, the "**Existing Easement Deeds**"), the District has an easement (the "**Existing Railroad Easement**" and together with the Existing Standard Easement, collectively, the "**Existing Easements**") allowing certain uses along and across certain property located within the Project Area and owned by Railroad, as such property is more particularly described in the Existing Railroad Easement Deeds (the "**Existing**

CONFORMED

Railroad Easement Property" and together with the Existing Standard Easement Property, the "**Existing Easement Property**").

E. In addition to the Existing Easements and in connection with the Project, the District desires new easement rights on, over and across certain real property located within the Project Area and owned by either Standard or Railroad (collectively, the "**New Easement Property**" and together with the Existing Easement Property, the "**Easement Property**").

F. The District also desires that the United States Army Corps of Engineers ("**USACE**") be a permitted user of certain of the Districts rights to use the Easement Property.

G. Railroad is a "rail carrier" (as defined in 49 U.S.C. §10102(5) under the Interstate Commerce Commission Termination Act of 1995).

I. As part of the Project, certain improvements/replacements are being made to Railroad's (i) Piedmont Bridge (the "**Piedmont Structure**") at the location generally depicted on the print attached hereto as **Exhibit "A-1-X"** and (ii) trestle bridge (the "**Trestle Structure**") at the location generally depicted on the print attached hereto as **Exhibit "A-1-Y"**.

J. Pursuant to the terms and conditions of this Agreement, Standard and Railroad, as applicable, are agreeable to grant the District easement and temporary license rights on, over and across the New Easement Property and Temporary License Area (defined below), respectively, for the purposes set forth in Article 1 below and to amend and restate the Existing Easement Deeds in their entirety, such that the Existing Easement Deeds will be subject to this Agreement and the terms and conditions of the form of amended and restated deed described herein, to update and accurately reflect the purposes of said deeds in connection with the Project.

AGREEMENT:

NOW, THEREFORE, IT IS AGREED by and between the parties hereto as follows:

Article 1. **GRANT OF EASEMENTS AND TEMPORARY LICENSE.**

A. For and in consideration of Four Hundred Twenty-Five Thousand Seven Hundred-Seventy and 10/100 Dollars ($425,770.10) to be paid by the District to Railroad upon the execution of this Agreement, and in further consideration of the District's agreement to perform and comply with the terms of this Agreement, Railroad, as of the Effective Date, shall execute and deliver to District, and District shall accept, a channel improvement easement deed in the form marked **Exhibit "F"**, attached hereto, granting the District a non-exclusive, perpetual and assignable rights and easements on, over and across a portion of Railroad's real property shown and described on **Exhibit "A-2"**, attached hereto for the limited purposes of: (i) constructing, operating and maintaining channel improvement works, (ii) constructing, maintaining and using an access road in accordance with the Plans (defined below), (iii) clearing, cutting, felling, removing and disposing of timber, trees, underbrush, buildings and/or other improvements from such real property that impede or obstruct the flow of flood waters, and (iv) excavating, dredging, cutting away and removing land and placing dredge or spoil material on

CONFORMED

such real property in accordance with the Plans and for no other purpose; in each case reserving, however, to Railroad and its successors and assigns, all such rights and privileges in the real property as may be used without interfering with or abridging the rights and easements contemplated hereunder.

B. For and in consideration of Forty-Four Thousand Five Hundred Fifty-Six and 92/100 Dollars ($44,556.92) to be paid by the District to Standard upon the execution of this Agreement, and in further consideration of the District's agreement to perform and comply with the terms of this Agreement, Standard, as of the Effective Date, shall execute and deliver to District, and District shall accept, channel improvement easement deeds in the form marked **Exhibit "F"**, attached hereto, granting the District a non-exclusive, perpetual and assignable rights and easements on, over and across a portion of Standard's real property shown and described on **Exhibit "A-3"** (East Calaveras Boulevard), **Exhibit "A-4"** (Los Coches Street), **Exhibit "A-5"** (Yosemite Drive), **Exhibit "A-6"** (APN No. 086-30-028) and **Exhibit "A-7"** (Montague Expressway), respectively, attached hereto for the limited purposes of: (i) constructing, operating and maintaining channel improvement works, (ii) with respect to the real property described on **Exhibit "A-6"** only, constructing, maintaining and using an access road in accordance with the Plans (defined below), (iii) clearing, cutting, felling, removing and disposing of timber, trees, underbrush, buildings and/or other improvements from such real property that impede or obstruct the flow of flood waters, and (iv) excavating, dredging, cutting away and removing land and placing dredge or spoil material on such real property in accordance with the Plans and for no other purpose; in each case reserving, however, to Standard and its successors and assigns, all such rights and privileges in the real property as may be used without interfering with or abridging the rights and easements contemplated hereunder.

C. For good and valuable consideration, the receipt and sufficiency of which are hereby acknowledged, and in further consideration of the District's agreement to perform and comply with the terms of this Agreement, Standard agrees to grant to the District and the District thereby agrees to accept a non-exclusive, revocable license (the "**License**") to enter upon the property depicted on **Exhibit "A-8"** (the "**Temporary License Area**"**),** for the sole purpose of performing the grading work required to be performed in connection with the Project Work (defined below), and as shall be more particularly shown on the Plans. The District's use of the License shall be subject to this Agreement. The License shall commence on the Effective Date and shall automatically terminate on the earlier to occur of (i) completion of such grading work and (ii) eighteen (18) months after the Effective Date.

D. For good and valuable consideration, the receipt of which is hereby acknowledged, and in further consideration of the District's agreement to perform and comply with terms of this Agreement, Railroad, as of the Effective Date, shall execute and deliver to the District, and the District shall accept, an amended and restated easement deed in the form marked **Exhibit "G"**, attached hereto, amending and restating each of the Existing Railroad Easement Deeds in their entirety.

E. For good and valuable consideration, the receipt of which is hereby acknowledged, and in further consideration of the District's agreement to perform and comply with terms of this Agreement, Standard, as of the Effective Date, shall execute and deliver to the

CONFORMED

District, and the District shall accept, an amended and restated easement deed in the form marked **Exhibit "G"**, attached hereto, amending and restating each of the Existing Standard Easement Deeds in their entirety.

F. For the avoidance of doubt and without limiting any provisions contained in this Agreement, the District shall obtain (and shall be responsible for obtaining on behalf of USACE and/or any Contractor) prior approval from Railroad, which approval shall not be unreasonably withheld, before commencing any Project Work or, except as expressly provided herein, the performance of any activity or work in which any person or equipment will be within twenty-five (25) feet of any Railroad track or other Railroad facilities, as required in Exhibit B, Section 5 of this Agreement.

G. The District shall not permit any cut vegetation or cleared debris to be abandoned in place or dumped on the Easement Property or other property of Railroad or Standard.

H. The District shall not permit the Easement Property to be used for any type of recreational road, path, trail, or any access of any kind by members of the public.

Article 2. PROJECT WORK; DISTRICT TO BEAR ENTIRE EXPENSE AND WORK RESPONSIBILITY.

A. Except as limited in this Section, any Project work performed in connection with this Agreement is collectively referred to herein as the "**Project Work**". The parties acknowledge and agree that any Project Work to be performed in connection with the initial construction of the Project, without regard to whether such work is performed on the Easement Property, Temporary License Area or in the vicinity of Railroad's operations and facilities, shall be subject to the terms and conditions of this Agreement. After the District completes the Project Work related to the initial construction of the Project in accordance with the Plans (and UP has reviewed and approved the same), the term "Project Work" shall only apply to any Project improvements installed (at any time) on the Easement Property, and the District's rights and obligations under this Agreement shall be limited to those that arise from or are related to the rights granted to the District in the Easement Property. Notwithstanding the foregoing, the District shall remain responsible after completion of the Project Work in accordance with the Plans (and UP has reviewed and approved the same) for any obligations or liabilities related to (i) any Project Work improvements installed outside of the Easement Property that accrue prior to UP's review and approval of the same and (ii) the Deferred Construction obligations included in Article 4 below.

B. Railroad has no duty or obligation to construct, reconstruct, inspect, maintain, repair, renew, or operate the Project improvements or perform any Project Work. The District shall bear the sole and entire responsibility to perform all necessary and appropriate Project Work. Project Work does not include Railroad Work (as defined below).

C. Railroad has no duty or obligation to contribute money, labor or other resources towards the construction, reconstruction, inspection, maintenance, repair, renewal or operation of the Project improvements or any Project Work. Unless otherwise provided herein, the District

CONFORMED

shall bear the entire cost and expense incurred in connection with the Project and all Project Work, along with all Reimbursable Costs (as defined below).

D. At the District's sole expense, Railroad agrees to perform track replacement and certain road work (the "**Railroad Work**") in connection with District's performance of the Project Work (as more particularly described in the Estimate (defined below)).

E. The District agrees to pay Railroad all actual costs and expenses incurred by Railroad in connection with the Railroad Work (the "**Reimbursable Costs**"), including without limitation, any and all actual costs and expenses in connection with the labor, materials, supplies, transportation, insurance and direct and indirect overhead charges (including standard additive rates) properly allocable to the Project, supervision, engineering review, inspection, flagging and other protective services, surveys, permits, and rental of tools, equipment and machinery, together with any other items of expense incurred by Railroad in performing the Railroad Work. The standard additive rates shall be subject to upward or downward adjustment based on industry standards and practices, and the District acknowledges and agrees that any such adjustment to standard additive rates may be made retroactively. Notwithstanding any provision contained herein to the contrary, any and all costs associated with reinstalling tracks on the Piedmont Structure by Railroad shall be at the sole cost and expense of Railroad and shall not be deemed a Reimbursable Cost (it being understood, for the avoidance of doubt, that the District will be responsible for all other work (and expenses) relating to the replacement of the Piedmont Structure as will be set forth in the Plans).

F. The District shall pay all invoices submitted by Railroad for Reimbursable Costs within sixty (60) days after the District's receipt of billing from Railroad. If the District disputes any portion of the invoiced costs, District's time to make such payments shall be tolled (with respect only to the disputed portion) while any judicial proceeding or alternative dispute resolution procedure agreed to by the parties is pending. Railroad agrees to provide as much supporting documentation as is customarily provided by Railroad for projects of this type.

G. The Railroad Work to be performed by Railroad in connection with the Project is described on Railroad's Material Force Account Estimate dated May 20, 2016 and corresponding summary estimate on **Exhibit "H"** attached hereto (collectively, the "**Estimate**").

H. Railroad, if it so elects, may recalculate and update the Estimate in the event the Project and the work contemplated thereunder to be performed in connection with the Project does not commence within six (6) months after the date of the Estimate. The District acknowledges that the Estimate may not include any estimate of flagging or other protective service costs that are to be paid by the District or the Contractor (defined below) in connection with flagging or other protective services provided by Railroad in connection with the Project. All of such costs incurred by Railroad are to be paid by the District or the Contractor as determined by Railroad and the District. If it is determined that Railroad will be billing the Contractor directly for such costs, the District agrees that it will pay Railroad for any flagging costs that have not been paid by the Contractor within thirty (30) days after the Contractor's receipt of billing.

CONFORMED

Article 3. **TERMS, CONDITIONS, AND EXHIBITS.**

A. Exhibits "A", "A-1", "A-2", "A-3", "A-4", "A-5", "A-6", "A-7", "A-8", "B", C", "D", "E", "F", "G" and "H" attached hereto, are hereby made a part of this Agreement.

1) Exhibit "A" is a print showing the Project Area.
2) Exhibit "A-1-X" is a print showing the general location of the Piedmont Structure.
3) Exhibit "A-1-Y" is a print showing the general location of the Trestle Structure.
4) Exhibit "A-2" is a print showing the Railroad Easement Area (APN Nos. 086-32-021 and 086-32-028).
5) Exhibit "A-3" is a print showing the Standard Easement Area (East Calaveras Boulevard).
6) Exhibit "A-4" is a print showing the Standard Easement Area (Los Coches Street).
7) Exhibit "A-5" is a print showing the Standard Easement Area (Yosemite Drive).
8) Exhibit "A-6" is a print showing the Standard Easement Area (APN No. 086-30-028).
9) Exhibit "A-7" is a print showing the Standard Easement Area (Montague Expressway).
10) Exhibit "A-8" is a print showing the Temporary License Area
11) Exhibit "B" are additional terms and conditions.
12) Exhibit "C" is Railroad's current form of Contractor's Right of Entry Agreement.
13) Exhibit "D" are insurance requirements.
14) Exhibit "E" are special safety requirements.
15) Exhibit "F" is a form of Easement Deed.
16) Exhibit "G" is a form of Amended and Restated Easement Deed.
17) Exhibit "H" is the Estimate.

B. District's use of the Easement Property and Temporary License Area is subject to District's compliance with each and all of the terms and conditions set forth in this Agreement.

Article 4. **DEFERRED CONSTRUCTION.**

The District acknowledge that conditions associated with the Project or Project Work may cause the complete stabilization (seasoning) of Railroad's track and related facilities to be deferred beyond the time of the Project or work associated therewith, and that Railroad's operations over track and related facilities in the vicinity of the Project during seasoning periods will impose extraordinary maintenance costs, in the event of caving, sliding, slipping, sinking, failure, deterioration, consolidation or settling of track or related facilities, including without limitation damage to embankments, subgrade, roadbed, rip-rapping, and track alignment, as well as failure, deterioration, settlement and consolidation of tracks or ballast, until a seasoning period is complete. Therefore, the District will pay to Railroad, as a part of the consideration for this Agreement, all actual costs of extraordinary maintenance (hereinafter referred to as **"Deferred Construction**") associated with the Project and Project Work, and attributed to caving, sliding, slipping, sinking, failure, deterioration, consolidation or settling of track or related railroad facilities in the vicinity of the Project Work which occurs during the time period commencing

CONFORMED

immediately following completion of the Project Work and ending two (2) years thereafter, whether completed by Railroad or Railroad's contractor. Railroad's costs of Deferred Construction which the District shall reimburse are the extra actual costs, in excess of normal maintenance costs, of maintaining track and related facilities in accordance with Railroad's standards or American Railway Engineering and Maintenance of Way Association ("**AREMA**") standards, and will include, without limitation, the costs of aligning and surfacing rail and adding ballast and other stabilizing materials. As a condition of reimbursement, Railroad shall provide the District with thirty days' advance written notice prior to commencing such work and shall provide an estimate of the anticipated costs, unless in the event of any emergency in which case Railroad shall provide such notice as soon as is reasonably practicable under the circumstances.

Article 5. **TERM; TERMINATION.**

A. This Agreement shall commence on the Effective Date and, unless sooner terminated as set forth in Paragraphs (B) and (C) below, shall continue in full force and effect as long as the Project improvements remain on the Easement Property.

B. If the District defaults in the performance of any material term or condition herein stated for a period of sixty (60) days after written notice to cure is given by the Railroad and/or Standard to the District specifying such default, the Railroad and Standard may, at their option, terminate this Agreement upon a final judicial determination of District's breach of this Agreement and, with respect to any such judicial determination relating to the New Easement Property, terminate the Easement Deed related thereto (provided, for the avoidance of doubt, that such express termination right for the New Easement Property shall not construed to limit the Railroad's or Standard's rights and remedies available to it under applicable law to enforce any defaults with respect to the Existing Railroad Easement Deeds or Existing Standard Easement Deeds).

C. If the Project Work is not substantially completed on the Easement Property within three (3) years after the Effective Date, the Railroad may, at its option, forthwith and immediately terminate its obligations under this Agreement by providing ninety (90) days prior written notice to the District. Exercise of this termination provision shall not, by itself, terminate District's property rights to the New Easement Property. Upon written request of District, Railroad shall meet with District within sixty (60) days to discuss alternative solutions for Railroad to perform its obligations under this Agreement, but such performance shall be in the Railroad's sole and absolute discretion, and the Railroad shall be under no legal obligation to ultimately perform such obligations.

D. In the event this Agreement is terminated pursuant to section B above, then at the option of Railroad and Standard, the District may be required to promptly cause the Project improvements to be removed from the Easement Property and the Easement Property restored to AREMA and Railroad's standards, or to the condition they were in as of the Effective Date, in each case to the satisfaction of the Railroad. If the District fails to promptly cause performance of such removal and restoration, Railroad may elect to cause the removal and restoration, at the District's sole expense.

CONFORMED

E. Termination of this Agreement shall not affect any of the rights or obligations of the parties hereto which may have accrued, or liabilities, accrued or otherwise, which may have arisen prior thereto.

Article 6. DEFINITION OF THE DISTRICT AND CONTRACTOR.

A. For purposes of this Agreement, all references in this Agreement to the term "District" shall also include the District's contractors, and the subcontractors of such contractors, and its or their officers, agents and employees, and others acting under its or their authority.

B. For purposes of this Agreement, the term "Contractor" shall mean the independent contractor or independent contractors hired by the District or USACE to perform any Project Work on any portion of Project Area during initial construction of the Project (including the Easement Property and Temporary License Area), and shall also include the Contractor's subcontractors and the Contractor's and subcontractor's respective employees, officers and agents, and others acting under its or their authority. Following initial construction of the Project, this definition shall only apply to work performed on the Easement Property.

Article 7. CONTRACTOR.

A. Railroad and Standard hereby consent to permitting a Contractor (whether hired by the District or USACE) to perform the Project Work and allowing such Contractor onto the Easement Property and Temporary License Area, provided that prior to any Contractor entering onto either Standard's or Railroad's property, the District shall require each Contractor to:

1) execute with Railroad the Railroad's then current form of Contractor's Right of Entry Agreement;
2) obtain the insurance required in such Contractor's Right of Entry Agreement; and
3) provide such insurance policies, certificates, binders and/or endorsements to Railroad.

B. Railroad's current form of Contractor's Right of Entry Agreement is marked **Exhibit "C"** and attached to this Agreement. The District confirms that it will inform each Contractor (for avoidance of doubt, including without limitation, a Contractor hired by USACE, but excluding any employees of the District), and shall inform USACE, as applicable, that it shall require its respective Contractor, to execute such agreement and obtain the required insurance before entering on, or commencing any Project Work on either Standard's or Railroad's property. Under no circumstances will the Contractor be allowed on any property owned by Standard or Railroad without first executing the Contractor's Right of Entry Agreement and obtaining the insurance required therein and also providing to the Railroad the insurance policies, binders, certificates and/or endorsements described therein.

CONFORMED

C. All insurance correspondence, binders, policies, certificates and/or endorsements shall be sent to:

Union Pacific Railroad Company
Real Estate Department
1400 Douglas Street, Mail Stop 1690
Omaha, NE 68179-1690
Attn: UPRR Folder No. 02967-19

Article 8. USACE USE OF PREMISES.

A. Subject to conditions of this Agreement, Railroad and Standard, as applicable, hereby consent to the District permitting USACE to access the Easement Property as follows: (i) during the initial construction of the Project to monitor and supervise such construction performed pursuant to construction contracts awarded by USACE, (ii) after initial construction is completed, as required by USACE to comply with its generally applicable inspection obligations, to access the Easement Property to inspect the Project, and (iii) after initial construction is completed, in the event the District fails to timely perform its obligations to USACE (or as otherwise set forth herein) with respect to the Project, USACE (or its construction contractor) shall have the right to maintain, repair, renew, use, and operate the improvements installed on the Easement Property in connection with the Project and to otherwise satisfy the District's obligations herein.

B. Notwithstanding Railroad and Standard permitting USACE or any Contractor (including any USACE contractor) to perform any activities or work as set forth herein on the Easement Property or Temporary License Area, the District shall remain responsible for, and shall not be released from, its obligations under this Agreement, including but not limited to, any obligations related to USACE's and/or any Contractor's use of, or exercise of rights related to, the Easement Property or Temporary License Area.

C. It is understood by all parties to this Agreement that any and all communications with USACE Contractors shall be done through the USACE representatives identified in a written notice to be delivered to the District and Railroad by USACE.

Article 9. NO CONSENT OR PERMISSION TO CROSS TRACK.

This Agreement and any Railroad consent or permission stated herein does not permit the District, USACE and/or any Contractor to (A) cross any of Railroad's tracks (except at existing open public crossings) with vehicles, equipment, or machinery to access the Project Area; or (B) access or use any portion of Railroad's property or Standard's property other than the Easement Property or Temporary License Area. City, USACE and/or a Contractor shall be required to obtain a separate written crossing agreement directly with Railroad before crossing any such tracks with vehicles, equipment or machinery to perform the Project Work or to access the Project Area.

CONFORMED

Article 10. DOCUMENT PREPARATION FEE.

The District shall pay upon the execution and return of this Agreement, the nonrefundable sum of Twenty-Five Thousand and No/100 Dollars ($25,000.00) to cover Railroad's costs to prepare this Agreement.

Article 11. NO ADMISSION.

The parties are currently in a lease dispute involving property rights and/or facilities of the District commonly referred to as the Blue Hills pipeline (Railroad Folder No. 1608-75), together with any other disputes related thereto, collectively, the "Blue Hills Dispute." The parties agree that neither the settlement of the Blue Hills Dispute nor any provision of this Agreement shall be used or construed as precedent, a waiver of any argument, course of dealing between the parties, or admission of liability or wrongdoing against either party for any purpose (including without limitation, the valuation of any real estate interests involved in the Blue Hills Dispute or being granted herein). The parties also agree that this Agreement may not be submitted or used as evidence in any action or other proceeding for any purpose except in an action or proceeding to enforce or interpret the terms of this Agreement.

Article 12. MODIFICATION – ENTIRE AGREEMENT.

No waiver, modification or amendment of this Agreement shall be of any force or effect unless made in writing, signed by the District, Railroad and Standard and specifying with particularity the nature and extent of such waiver, modification or amendment. Any waiver by a party of any default by another party shall not affect or impair any right arising from any subsequent default. This Agreement (including the exhibits attached hereto and made a part hereof) constitutes the entire understanding between the District, Railroad and Standard with respect to the Project Work and cancels and supersedes any prior negotiations, understandings or agreements, whether written or oral with respect thereto.

Article 13. CHOICE OF LAW

This Agreement shall in all respects be interpreted, enforced, and governed by and under the laws of the State of California.

(Remainder of Page Intentionally Left Blank)

CONFORMED

IN WITNESS WHEREOF, the parties hereto have caused this Agreement to be executed effective as of the Effective Date.

UNION PACIFIC RAILROAD COMPANY, a Delaware corporation

By: _____
Renay J. Robison, Director – Real Estate

STANDARD REALTY AND DEVELOPMENT COMPANY, a California corporation

By: _____
Tony K. Love, Chairman and CEO

SANTA CLARA VALLEY WATER DISTRICT, a special district created by the California legislature

By: _____
Name: Norma J. Camacho
Title: Interim CEO

ATTEST: MICHELE L. KING, CMC

_____
Clerk/Board of Directors

CONFORMED

EXHIBIT A

TO CHANNEL IMPROVEMENT CONSTRUCTION & MAINTENANCE AGREEMENT

Project Area Print

(see attached)

CONFORMED

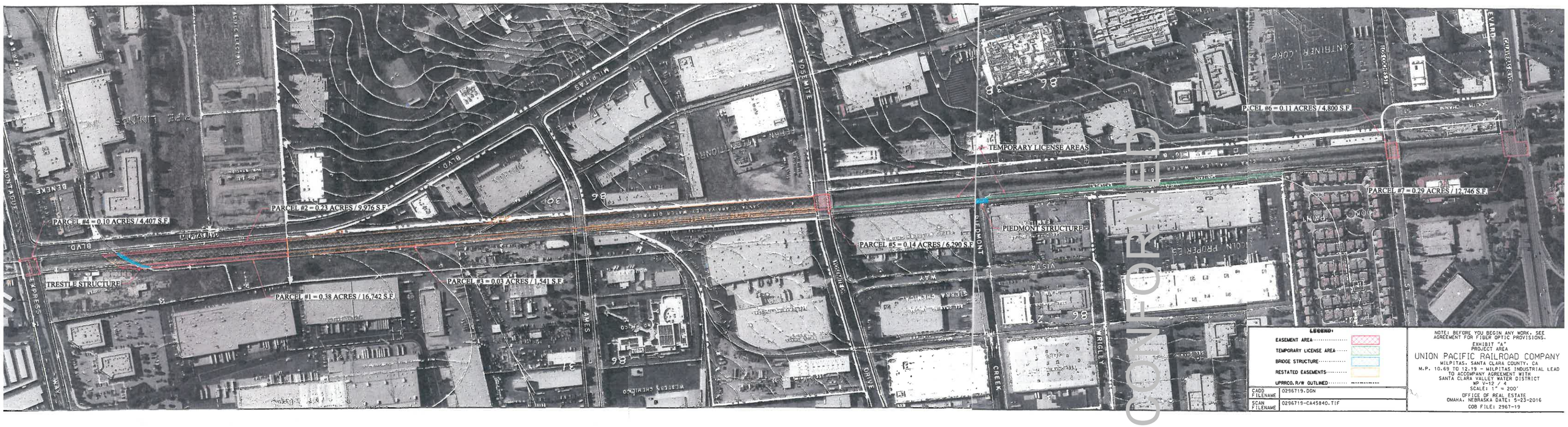
PARCEL #4 = 0.10 ACRES / 4,407 S.F.
PARCEL #2 = 0.23 ACRES / 9,976 S.F.
PARCEL #1 = 0.38 ACRES / 16,742 S.F.
PARCEL #3 = 0.03 ACRES / 1,541 S.F.
PARCEL #5 = 0.14 ACRES / 6,290 S.F.
PARCEL #6 = 0.11 ACRES / 4,800 S.F.
PARCEL #7 = 0.29 ACRES / 12,746 S.F.
TEMPORARY LICENSE AREAS
TRESTLE STRUCTURE
PIEDMONT STRUCTURE
MILPITAS BLVD
MONTAGUE
EXPRESS
WAY
AMES
ROSEMITE
PIEDMONT
CREEK
DRIVE
WRIGLEY
VISTA
SIERRA
WAY
CONTINENTAL CORP
LINCOLN PROPERTIES
SANTA CLARA VALLEY WATER DISTRICT
PACIFIC ELECTRIC
PIPE LINING
WESTERN CHEMICAL
LEGEND:
EASEMENT AREA
TEMPORARY LICENSE AREA
BRIDGE STRUCTURE
RESTATED EASEMENTS
UPRRCO. R/W OUTLINED
CADD FILENAME 0296719.DGN
SCAN FILENAME 0296719-CA45840.TIF
NOTE: BEFORE YOU BEGIN ANY WORK, SEE AGREEMENT FOR FIBER OPTIC PROVISIONS.
EXHIBIT "A"
PROJECT AREA
UNION PACIFIC RAILROAD COMPANY
MILPITAS, SANTA CLARA COUNTY, CA
M.P. 10.69 TO 12.19 - MILPITAS INDUSTRIAL LEAD
TO ACCOMPANY AGREEMENT WITH
SANTA CLARA VALLEY WATER DISTRICT
XP V-12 / 4
SCALE: 1" = 200'
OFFICE OF REAL ESTATE
OMAHA, NEBRASKA DATE: 5-23-2016
COB FILE: 2967-19

COMPLETE

EXHIBIT A-1-X

TO CHANNEL IMPROVEMENT CONSTRUCTION & MAINTENANCE AGREEMENT

General Location of Piedmont Structure

(see attached)

CONFORMED

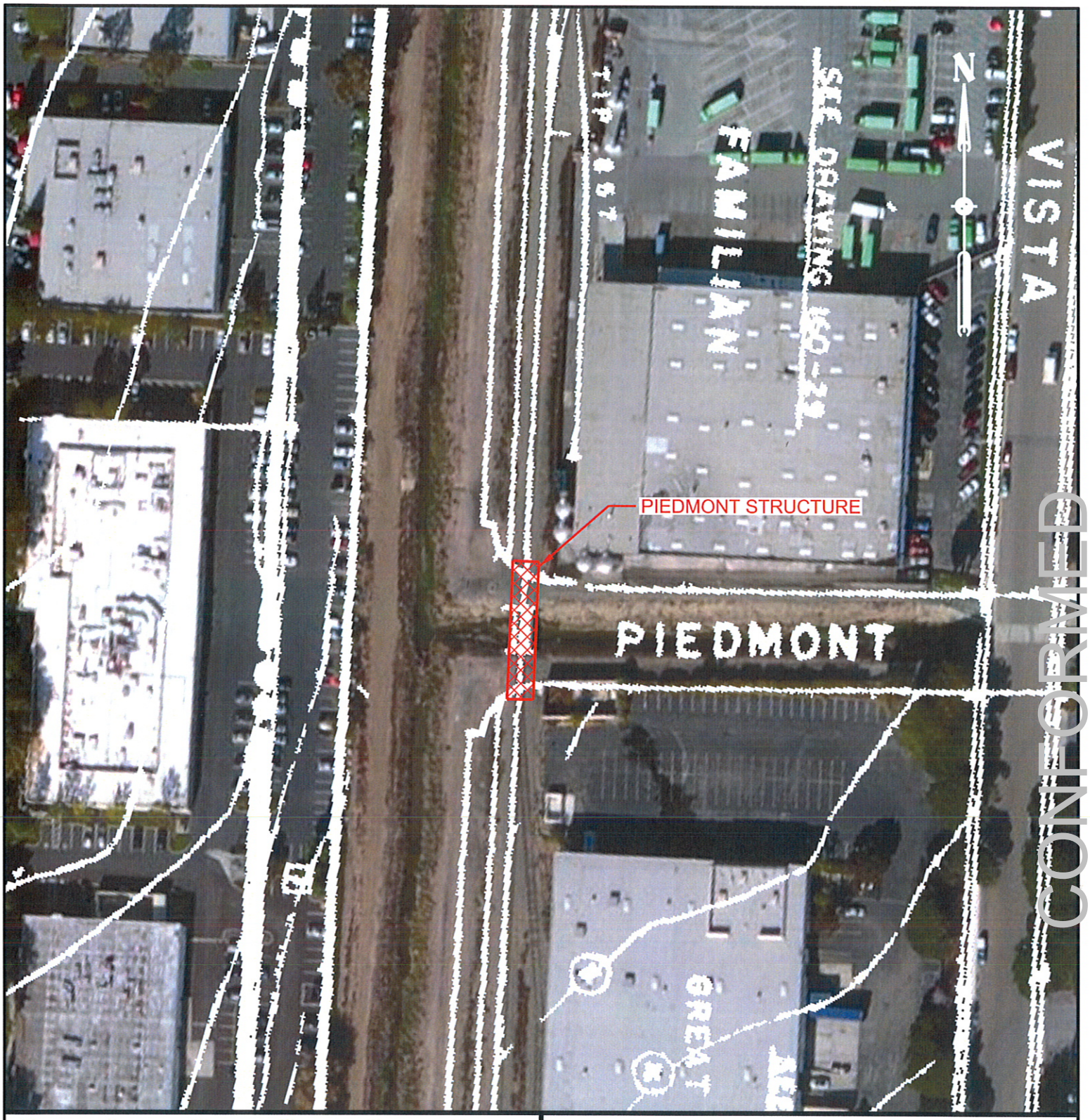

LEGEND:

BRIDGE STRUCTURE

UPRRCO. R/W OUTLINED

CADD FILENAME	0296719.DGN
SCAN FILENAME	0296719-CA45840.TIF

NOTE: BEFORE YOU BEGIN ANY WORK, SEE AGREEMENT FOR FIBER OPTIC PROVISIONS.

EXHIBIT "A-1-X"

UNION PACIFIC RAILROAD COMPANY

MILPITAS, SANTA CLARA COUNTY, CA

M.P. 11.23 - MILPITAS INDUSTRIAL LEAD

TO ACCOMPANY AGREEMENT WITH
SANTA CLARA VALLEY WATER DISTRICT
WP V-12 / 4
SCALE: 1" = 100'

OFFICE OF REAL ESTATE
OMAHA, NEBRASKA DATE: 5-18-2016

COB FILE: 2967-19

EXHIBIT A-1-Y

TO CHANNEL IMPROVEMENT CONSTRUCTION & MAINTENANCE AGREEMENT

General Location of Trestle Structure

(see attached)

CONFORMED

LEGEND:

BRIDGE STRUCTURE

UPRRCO. R/W OUTLINED

CADD FILENAME	0296719.DGN
SCAN FILENAME	0296719-CA45840.TIF

NOTE: BEFORE YOU BEGIN ANY WORK, SEE AGREEMENT FOR FIBER OPTIC PROVISIONS.

EXHIBIT "A-1-Y"

UNION PACIFIC RAILROAD COMPANY

MILPITAS, SANTA CLARA COUNTY, CA

M.P. 12.09 - MILPITAS INDUSTRIAL LEAD

TO ACCOMPANY AGREEMENT WITH
SANTA CLARA VALLEY WATER DISTRICT
WP V-12 / 4
SCALE: 1" = 100'

OFFICE OF REAL ESTATE
OMAHA, NEBRASKA DATE: 5-18-2016

COB FILE: 2967-19

EXHIBIT A-2

TO CHANNEL IMPROVEMENT CONSTRUCTION & MAINTENANCE AGREEMENT

Legal description and depiction of Railroad Easement Area
(APN Nos. 086-32-021 and 086-32-028)

(see attached)

CONFORMED

EXHIBIT A-2

SANTA CLARA VALLEY WATER DISTRICT
5750 Almaden Expressway
San Jose, CA 95118

Original By:	CLM	Revised By:	SJP
Date:	11/30/2015	Revision Date:	5/4/2016
PROJECT:	BERRYESSA CREEK	APN:	086-32-021 & 028
PROPERTY:	UNION PACIFIC RAILROAD CO.	RESC File No.:	401785

ALL THAT CERTAIN REAL PROPERTY SITUATE IN THE CITY OF MILPITAS, COUNTY OF SANTA CLARA, STATE OF CALIFORNIA, BEING A PORTION OF THE LANDS GRANTED TO WESTERN PACIFIC RAILROAD COMPANY (NOW KNOWN AS UNION PACIFIC RAIL ROAD COMPANY) PER THAT CERTAIN GRANT DEED RECORDED ON SEPTEMBER 13, 1951 IN BOOK 2282 OF OFFICIAL RECORDS AT PAGE 395, IN THE OFFICE OF THE RECORDER COUNTY OF SANTA CLARA, MORE PARTICULARLY DESCRIBED AS FOLLOWS:

PARCEL 1 – CHANNEL IMPROVEMENT EASEMENT:

COMMENCING AT THE NORTHEAST CORNER OF THE LANDS GRANTED TO THE WESTERN PACIFIC RAILROAD COMPANY (NOW KNOWN AS UNION PACIFIC RAILROAD COMPANY) PER THAT CERTAIN GRANT DEED RECORDED ON JUNE 18, 1951 AS DOCUMENT NUMBER 726399 OF OFFICIAL RECORDS, IN THE OFFICE OF THE RECORDER, COUNTY OF SANTA CLARA;

THENCE ALONG THE NORTHERLY LINE OF SAID LANDS, SOUTH 79°05'00" WEST, 154.59 FEET TO THE **POINT OF BEGINNING**;

THENCE LEAVING SAID NORTHERLY LINE OF SAID LANDS, SOUTH 11°50'30" EAST, 795.66 FEET TO THE A POINT ON THE NORTHWESTERLY LINE OF THAT CERTAIN EASEMENT GRANTED TO THE SANTA CLARA VALLEY WATER DISTRICT PER GRANT DEED RECORDED ON JANUARY 23, 1975 AS DOCUMENT NUMBER 4933884 OF OFFICIAL RECORDS, IN THE OFFICE OF THE RECORDER, COUNTY OF SANTA CLARA, SAID POINT ALSO BEING THE BEGINNING OF A NON-TANGENT CURVE TO THE RIGHT, HAVING A RADIUS OF 397.32 FEET, WHOSE CENTER BEARS NORTH 77°37'43" WEST.

THENCE SOUTHWESTERLY ALONG SAID CURVE AND THE NORTHERLY LINE OF SAID EASEMENT, THROUGH A CENTRAL ANGLE OF 3°18'23", FOR AN ARC LENGTH OF 22.93 FEET TO A POINT ON THE WESTERLY LINE OF SAID EASEMENT;

THENCE CONTINUING ALONG SAID WESTERLY LINE OF SAID EASEMENT, SOUTH 11°50'30" EAST,41.20 FEET TO A CURVE CONCENTRIC WITH AND DISTANT 25.00 FEET SOUTHEASTERLY FROM THE CENTERLINE OF THE U.P.R.R. TRACKS;

THENCE SOUTHWESTERLY ALONG SAID CURVE, BEING A NON-TANGENT CURVE TO THE RIGHT, HAVING A RADIUS OF 407.00 FEET, WHOSE CENTER BEARS NORTH 71°44'24" WEST, THROUGH A CENTRAL ANGLE OF 2°42'12" FOR AN ARC LENGTH OF 19.20 FEET TO A POINT ON THE EASTERLY LINE OF THAT CERTAIN EASEMENT GRANTED TO THE SANTA CLARA COUNTY FLOOD CONTROL AND WATER CONSERVATION DISTRICT (NOW KNOWN AS THE SANTA CLARA VALLEY WATER

CONFORMED

EXHIBIT A-2

DISTRICT) RECORDED ON APRIL 19, 1955 IN DOCUMENT NUMBER 1078042 OF OFFICIAL RECORDS, IN THE OFFICE OF THE RECORDER, COUNTY OF SANTA CLARA;

THENCE CONTINUING ALONG SAID EASTERLY LINE, NORTH 11°50'30" WEST, 874.19 FEET TO A POINT ON THE NORTHERLY LINE OF SAID LANDS;

THENCE CONTINUING ALONG SAID NORTHERLY LINE, NORTH 79°05'00" EAST, 20.02 FEET TO THE **POINT OF BEGINNING**.

CONTAINING 16,742 SQUARE FEET OF LAND, MORE OR LESS.

PARCEL 2 – CHANNEL IMPROVEMENT EASEMENT:

COMMENCING AT THE NORTHEAST CORNER OF THE LANDS GRANTED TO THE WESTERN PACIFIC RAILROAD COMPANY (NOW KNOWN AS UNION PACIFIC RAILROAD COMPANY) PER THAT CERTAIN GRANT DEED RECORDED ON JUNE 18, 1951 AS DOCUMENT NUMBER 726399 OF OFFICIAL RECORDS, IN THE OFFICE OF THE RECORDER, COUNTY OF SANTA CLARA;

THENCE ALONG THE NORTHERLY LINE OF SAID LANDS SOUTH 79°05'00" EAST, 234.63 FEET TO A POINT ON THE WESTERLY LINE OF THAT CERTAIN EASEMENT GRANTED TO THE SANTA CLARA FLOOD CONTROL AND WATER CONSERVATION DISTRICT (NOW KNOWN AS THE SANTA CLARA VALLEY WATER DISTRICT) RECORDED ON APRIL 19, 1955 IN DOCUMENT NUMBER 1078042 OF OFFICIAL RECORDS, IN THE OFFICE OF THE RECORDER, COUNTY OF SANTA CLARA AND BEING THE **POINT OF BEGINNING**.

THENCE ALONG SAID WESTERLY LINE, SOUTH 11°50'30" EAST, 948.05 FEET TO A CURVE CONCENTRIC WITH AND DISTANT 25.00 FEET SOUTHEASTERLY FROM THE CENTERLINE OF THE U.P.R.R. TRACKS;

THENCE SOUTHWESTERLY ALONG SAID CURVE, BEING A NON TANGENT CURVE TO THE RIGHT, HAVING A RADIUS OF 407.00 FEET, WHOSE CENTER BEARS NORTH 55°42'56" WEST, THROUGH A CENTRAL ANGLE OF 1°54'19" FOR AN ARC LENGTH OF 13.53 FEET TO A POINT ON THE EASTERLY LINE OF MILPITAS BOULEVARD;

THENCE CONTINUING ALONG SAID EASTERLY LINE OF MILPITAS BOULEVARD, NORTH 11°54'30" WEST, 957.44 FEET TO A POINT ON THE NORTHERLY LINE OF SAID LANDS;

THENCE CONTINUING ALONG SAID NORTHERLY LINE, NORTH 79°05'00" EAST, 11.03 FEET TO THE **POINT OF BEGINNING**.

CONTAINING 9,976 SQUARE FEET OF LAND, MORE OR LESS.

BASIS OF BEARING:

BEARINGS AND DISTANCES HEREIN ARE BASED ON THE CALIFORNIA COORDINATE SYSTEM OF 1983, ZONE 3. MULTIPLY HEREIN DESCRIBED DISTANCES BY 1.00006432 TO OBTAIN GROUND DISTANCES.

CONFORMED

EXHIBIT A-2

SURVEYOR'S STATEMENT:

THE DESCRIPTION WAS PREPARED BY ME OR UNDER MY DIRECTION IN CONFORMANCE WITH THE REQUIREMENTS OF THE LAND SURVEYOR'S ACT.

GISELA SILKE JOBST, L9169

5-25-2016
Date

LICENSED LAND SURVEYOR
GISELA SILKE JOBST
L9169
STATE OF CALIFORNIA

CONFORMED

EXHIBIT A-2

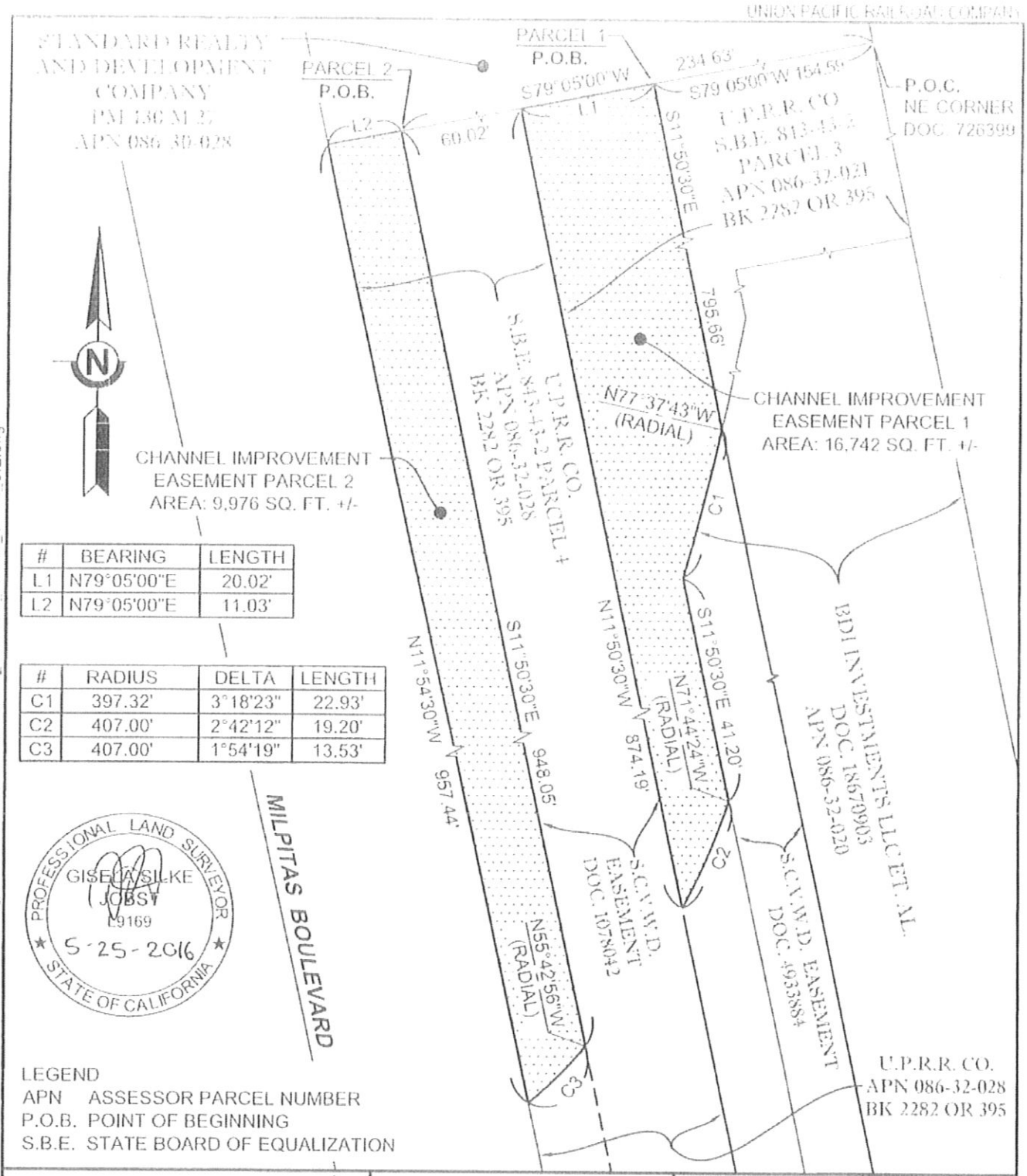

#	BEARING	LENGTH
L1	N79°05'00"E	20.02'
L2	N79°05'00"E	11.03'

#	RADIUS	DELTA	LENGTH
C1	397.32'	3°18'23"	22.93'
C2	407.00'	2°42'12"	19.20'
C3	407.00'	1°54'19"	13.53'

Santa Clara Valley Water District

SCALE: NOT TO SCALE

PROJ. NO.	4017
FILE NO.	85
APN	086-32-021 &028
TITLE REPORT NO.	0616013055-RR
DRAWN	CLM
DATE	11/30/15

REV.	APPR.	DATE	DESCRIPTION
1	SJP	5/4/16	MADE PARCEL 3 A STAND ALONE EASEMENT
2			

SCVWD W:\ROW\00PROJECTS\BERRYESSA CREEK\2016_054\AUTOCAD\CURRENT\2016_054PLAT_401785_UPRR_CIE.dwg

Sheet 1 of 1

CONFORMED

EXHIBIT A-3

TO CHANNEL IMPROVEMENT CONSTRUCTION & MAINTENANCE AGREEMENT

Legal description and depiction of Standard Easement Area
(East Calaveras Boulevard)

(see attached)

CONFORMED

EXHIBIT A-3

PARCEL 4 - CHANNEL IMPROVEMENT EASEMENT:
ALL THAT CERTAIN REAL PROPERTY SITUATE IN THE CITY OF MILPITAS, COUNTY OF SANTA CLARA, STATE OF CALIFORNIA, BEING A PORTION OF CALAVERAS BOULEVARD AS SHOWN ON THAT CERTAIN PARCEL MAP FILED ON JUNE 28, 1972 IN BOOK 303 OF MAPS AT PAGE 53, IN THE OFFICE OF THE RECORDER, COUNTY OF SANTA CLARA, MORE PARTICULARLY DESCRIBED AS FOLLOWS:

BEGINNING AT THE NORTHEAST CORNER OF THE LANDS OF THE SANTA CLARA COUNTY FLOOD CONTROL AND WATER CONSERVATION DISTRICT (NOW KNOWN AS THE SANTA CLARA VALLEY WATER DISTRICT) PER THAT CERTAIN GRANT DEED RECORDED ON MAY 10, 1972 AS DOCUMENT NUMBER 4253949 OF OFFICIAL RECORDS, IN THE OFFICE OF THE RECORDER, COUNTY OF SANTA CLARA, ALSO BEING A POINT ON THE SOUTH LINE OF CALAVERAS BOULEVARD;

THENCE ALONG SAID SOUTH LINE OF CALAVERAS BOULEVARD, SAID SOUTH LINE ALSO BEING THE NORTHERLY LINE OF SAID DOCUMENT NUMBER 4253949, SOUTH 74°36'19" WEST, 110.93 FEET TO THE BEGINNING OF A CURVE CONCAVE TO THE NORTH HAVING A RADIUS OF 10,062.00 FEET;

THENCE ALONG SAID CURVE AND SAID SOUTH LINE THROUGH A CENTRAL ANGLE OF 0°07'15", AN ARC LENGTH OF 21.22 FEET TO THE NORTHWEST CORNER OF SAID LANDS;

THENCE NORTH 12°34'52" WEST, 65.16 FEET TO A POINT ON THE SOUTH LINE OF THAT CERTAIN EASEMENT GRANTED TO THE SANTA CLARA COUNTY FLOOD CONTROL AND WATER CONSERVATION DISTRICT (NOW KNOWN AS THE SANTA CLARA VALLEY WATER DISTRICT) PER THAT CERTAIN GRANT DEED RECORDED ON APRIL 19, 1955 AS DOCUMENT NUMBER 1078041 OF OFFICIAL RECORDS, COUNTY OF SANTA CLARA;

THENCE ALONG SAID SOUTH LINE OF SAID EASEMENT, NORTH 75°28'48" EAST, 61.57 FEET TO THE SOUTHEAST CORNER OF SAID EASEMENT;

THENCE ALONG THE EAST LINE OF SAID EASEMENT NORTH 12°35'12" WEST, 60.13 FEET TO A POINT ON THE NORTH LINE OF CALAVERAS BOULEVARD, ALSO BEING THE SOUTH LINE OF THE LANDS GRANTED TO THE SANTA CLARA VALLEY WATER DISTRICT PER THAT CERTAIN GRANT DEED RECORDED ON JUNE 15, 1976 AS DOCUMENT NUMBER 5313086 OF OFFICIAL RECORDS, IN THE OFFICE OF THE RECORDER, COUNTY OF SANTA CLARA;
THENCE ALONG SAID NORTH LINE OF CALAVERAS BOULEVARD, NORTH 74°35'59" EAST, 70.55 FEET;

THENCE LEAVING SAID NORTH LINE, SOUTH 12°34'52" EAST, 124.39 FEET TO THE **POINT OF BEGINNING.**

CONTAINING 12,746 SQUARE FEET OF LAND, MORE OR LESS.

BASIS OF BEARING:
BEARINGS AND DISTANCES HEREIN ARE BASED ON THE CALIFORNIA COORDINATE SYSTEM OF 1983, ZONE 3.

CONFORMED

EXHIBIT A-3

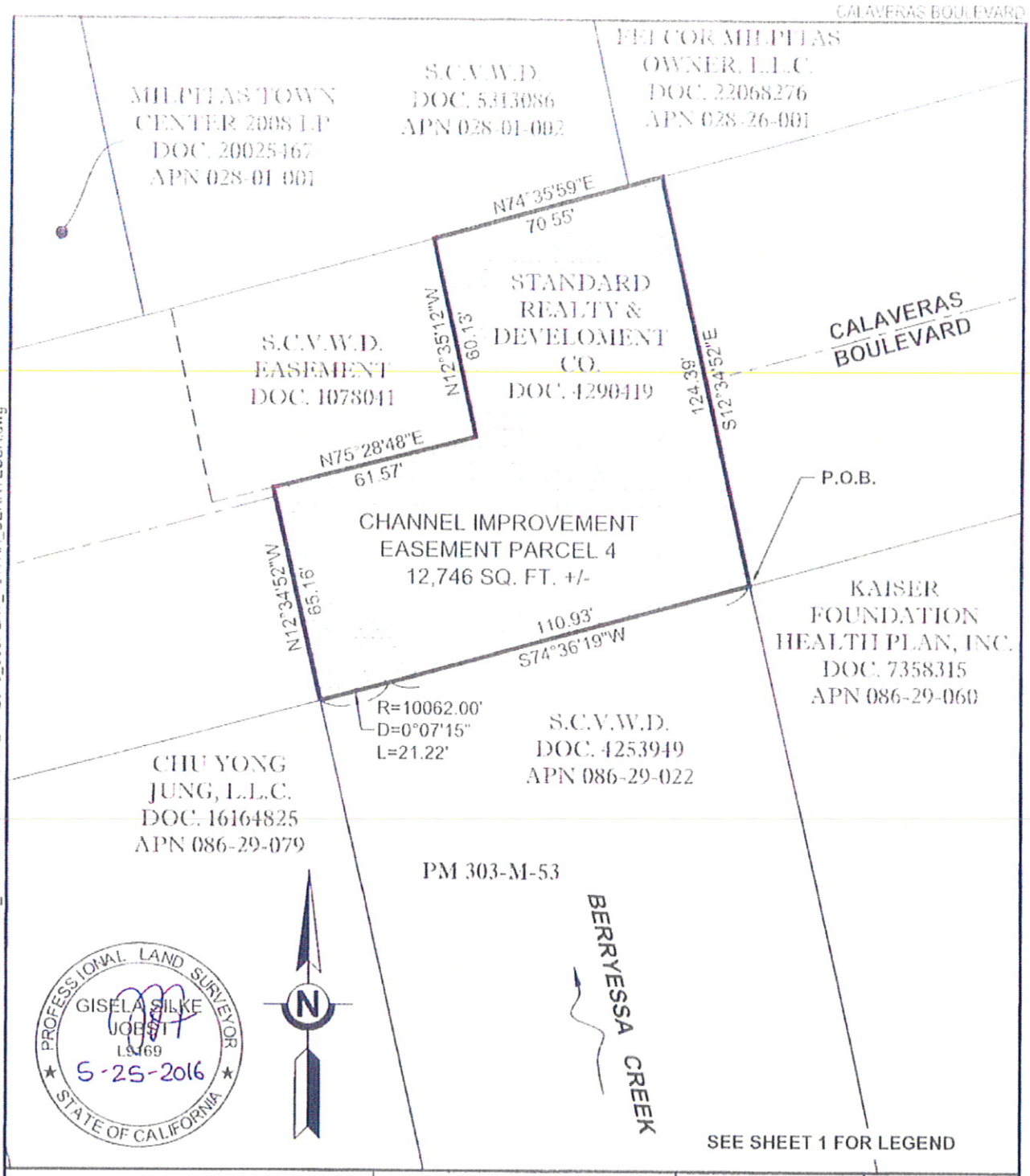

Santa Clara Valley Water District

SCALE: 1" = 40'

PROJ. NO.	4017
FILE NO.	89
APN	N/A
TITLE REPORT NO.	0616012500-RR
DRAWN	RPC
DATE	2/8/2016

REV.	APPR.	DATE	DESCRIPTION
1	SJP	5/04/16	MERGED 4017-80,82,88 AND 89 INTO SINGLE DOC.
2			

SCVWD W:\ROW\00PROJECTS\BERRYESSA CREEK\2016_009\AUTOCAD\CURRENT\2016_009PLAT_4017XX_BERRYESSA.dwg

CONFORMED

EXHIBIT A-4

TO CHANNEL IMPROVEMENT CONSTRUCTION & MAINTENANCE AGREEMENT

Legal description and depiction of Railroad Easement Area
(Los Coches Street)

(see attached)

CONFORMED

EXHIBIT A-4

SANTA CLARA VALLEY WATER DISTRICT
5750 Almaden Expressway
San Jose, CA 95118

Original By:	CLM	Revised By:	NIP
Date:	04/22/2015	Revision Date:	MAY 4, 2016
PROJECT:	BERRYESSA CREEK	APN:	N/A
PROPERTY:	STANDARD REALTY & DEV. CO.	RESU File No.:	1017.50182288.89

PARCEL 1 - CHANNEL IMPROVEMENT EASEMENT:

ALL THAT CERTAIN REAL PROPERTY SITUATE IN THE CITY OF MILPITAS, COUNTY OF SANTA CLARA, STATE OF CALIFORNIA, BEING A PORTION OF LOS COCHES STREET AS SHOWN ON THAT CERTAIN PARCEL MAP FILED ON JUNE 28, 1972 IN BOOK 303 OF MAPS AT PAGE 53, IN THE OFFICE OF THE RECORDER, COUNTY OF SANTA CLARA, MORE PARTICULARLY DESCRIBED AS FOLLOWS:

COMMENCING AT A POINT ON THE NORTH LINE OF LOS COCHES STREET (60 FEET WIDE), AS SHOWN ON SAID PARCEL MAP, SAID POINT ALSO BEING THE SOUTHWEST CORNER OF THAT CERTAIN LAND GRANTED TO THE SANTA CLARA VALLEY FLOOD CONTROL AND WATER CONSERVATION DISTRICT (NOW KNOWN AS THE SANTA CLARA VALLEY WATER DISTRICT) PER THAT CERTAIN GRANT DEED RECORDED ON MAY 10, 1972 AS DOCUMENT NUMBER 4253949 OF OFFICIAL RECORDS, IN THE OFFICE OF THE RECORDER, COUNTY OF SANTA CLARA;

THENCE ALONG SAID NORTH LINE OF LOS COCHES STREET (60 FEET WIDE), AS SHOWN ON SAID PARCEL MAP, ALSO BEING THE SOUTH LINE OF SAID LANDS OF SANTA CLARA VALLEY FLOOD CONTROL AND WATER CONSERVATION DISTRICT (NOW KNOWN AS THE SANTA CLARA VALLEY WATER DISTRICT), NORTH 75°56'48" EAST, 20.74 FEET TO THE **POINT OF BEGINNING**;

THENCE CONTINUING ALONG SAID NORTH LINE, NORTH 75°56'48" EAST, 80.00 FEET;

THENCE LEAVING SAID NORTH LINE, SOUTH 14°03'12" EAST, 60.00 FEET TO A POINT ON THE SOUTH LINE OF LOS COCHES STREET (60 FEET WIDE), AS SHOWN ON SAID PARCEL MAP, SAID LINE ALSO BEING THE NORTH LINE OF THE LANDS OF SANTA CLARA VALLEY FLOOD CONTROL AND WATER CONSERVATION DISTRICT (NOW KNOWN AS THE SANTA CLARA VALLEY WATER DISTRICT) PER THAT CERTAIN GRANT DEED RECORDED ON AUGUST 30, 1971 AS DOCUMENT NUMBER 4083033 OF OFFICIAL RECORDS, IN THE OFFICE OF THE RECORDER, COUNTY OF SANTA CLARA;

THENCE ALONG SAID SOUTH LINE, SOUTH 75°56'48" WEST, 80.00 FEET;

THENCE LEAVING SAID SOUTH LINE, NORTH 14°03'12" WEST, 60.00 FEET TO THE **POINT OF BEGINNING**.

CONTAINING 4,800 SQUARE FEET OF LAND, MORE OR LESS.

CONFORMED

EXHIBIT A-4

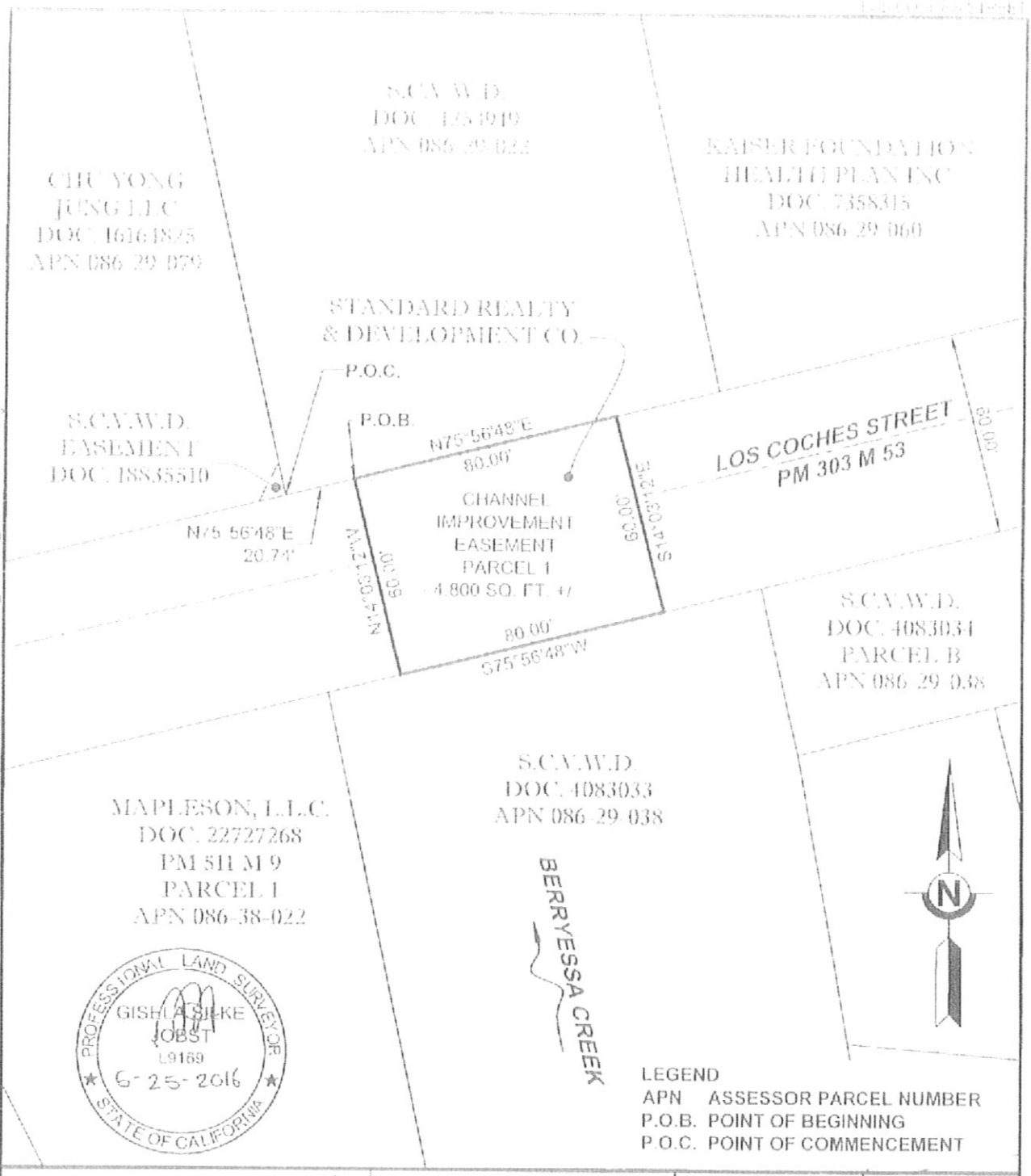

LEGEND
APN ASSESSOR PARCEL NUMBER
P.O.B. POINT OF BEGINNING
P.O.C. POINT OF COMMENCEMENT

Santa Clara Valley Water District

SCALE 1" =40'

REV.	APPR.	DATE	DESCRIPTION
1	SJP	5/4/16	MERGED 4017-80,82,88 AND 89 INTO SINGLE DOC
2			

PROJ. NO	4017
FILE NO.	80
APN	N/A
TITLE REPORT NO.	0616012498 RR
DRAWN	RPC
DATE	2/8/2016

SCVWD W:\ROW\00PROJECTS\BERRYESSA CREEK\2016_009\AUTOCAD\CURRENT\2016_009PLA_40'XX_BERRYESSA.dwg

Sheet 1 of 4

CONFORMED

EXHIBIT A-5

TO CHANNEL IMPROVEMENT CONSTRUCTION & MAINTENANCE AGREEMENT

Legal description and depiction of Railroad Easement Area
(Yosemite Drive)

(see attached)

CONFORMED

EXHIBIT A-5

PARCEL 2 - CHANNEL IMPROVEMENT EASEMENT:

ALL THAT CERTAIN REAL PROPERTY SITUATE IN THE CITY OF MILPITAS, COUNTY OF SANTA CLARA, STATE OF CALIFORNIA, BEING A PORTION OF YOSEMITE DRIVE AS SHOWN ON THAT CERTAIN PARCEL MAP FILED ON JANUARY 27, 1972 IN BOOK 296 OF MAPS AT PAGE 3, IN THE OFFICE OF THE RECORDER, COUNTY OF SANTA CLARA, MORE PARTICULARLY DESCRIBED AS FOLLOWS:

COMMENCING AT A POINT ON THE NORTH LINE OF YOSEMITE DRIVE (80 FEET WIDE), AS SHOWN ON SAID PARCEL MAP, SAID POINT ALSO BEING THE SOUTHWEST CORNER OF THAT CERTAIN LAND GRANTED TO THE SANTA CLARA COUNTY FLOOD CONTROL AND WATER CONSERVATION DISTRICT (NOW KNOWN AS THE SANTA CLARA VALLEY WATER DISTRICT), PER THAT CERTAIN GRANT DEED RECORDED ON AUGUST 30, 1971 AS DOCUMENT NUMBER 4083033 OF OFFICIAL RECORDS, IN THE OFFICE OF THE RECORDER, COUNTY OF SANTA CLARA;

THENCE ALONG SAID NORTH LINE OF YOSEMITE DRIVE (80 FEET WIDE), AS SHOWN ON SAID PARCEL MAP, ALSO BEING THE SOUTH LINE OF SAID LANDS, NORTH 75°28'48" EAST, 17.45 FEET TO THE **POINT OF BEGINNING**;

THENCE CONTINUING ALONG SAID NORTH LINE OF YOSEMITE DRIVE (80 FEET WIDE), AS SHOWN ON SAID PARCEL MAP, NORTH 75°28'48" EAST, 49.25 FEET TO THE BEGINNING OF A CURVE CONCAVE TO THE NORTH HAVING A RADIUS OF 1,572.65 FEET;

THENCE ALONG SAID CURVE THROUGH A CENTRAL ANGLE OF 1°05'49", AN ARC LENGTH OF 30.11 FEET;

THENCE LEAVING SAID NORTH LINE, SOUTH 12°30'12" EAST, 80.09 FEET TO A POINT ON THE SOUTH LINE OF YOSEMITE DRIVE (80 FEET WIDE), AS SHOWN ON SAID PARCEL MAP, SAID SOUTH LINE ALSO BEING THE NORTH LINE OF LANDS OF STANDARD REALTY AND DEVELOPMENT COMPANY PER THAT CERTAIN GRANT DEED RECORDED ON DECEMBER 28, 1970 AS DOCUMENT NUMBER 3829080 OF OFFICIAL RECORDS, IN THE OFFICE OF THE RECORDER, COUNTY OF SANTA CLARA, SAID POINT ALSO BEING THE BEGINNING OF A NON-TANGENT CURVE CONCAVE TO THE NORTH HAVING A RADIUS OF 1,652.62 FEET AND TO WHICH POINT A RADIAL LINE BEARS SOUTH 15°31'41" EAST;

THENCE WESTERLY ALONG SAID CURVE AND SAID SOUTH LINE THROUGH A CENTRAL ANGLE OF 1°00'58", AN ARC LENGTH OF 29.31 FEET;

THENCE CONTINUING ALONG SAID SOUTH LINE OF YOSEMITE DRIVE (80 FEET WIDE), AS SHOWN ON SAID PARCEL MAP, SOUTH 75°29'17" WEST, 48.57 FEET;

THENCE LEAVING SAID SOUTH LINE, NORTH 13°33'34" WEST, 80.02 FEET TO THE **POINT OF BEGINNING**.

CONTAINING 6,290 SQUARE FEET OF LAND, MORE OR LESS.

CONFORMED

EXHIBIT A-5

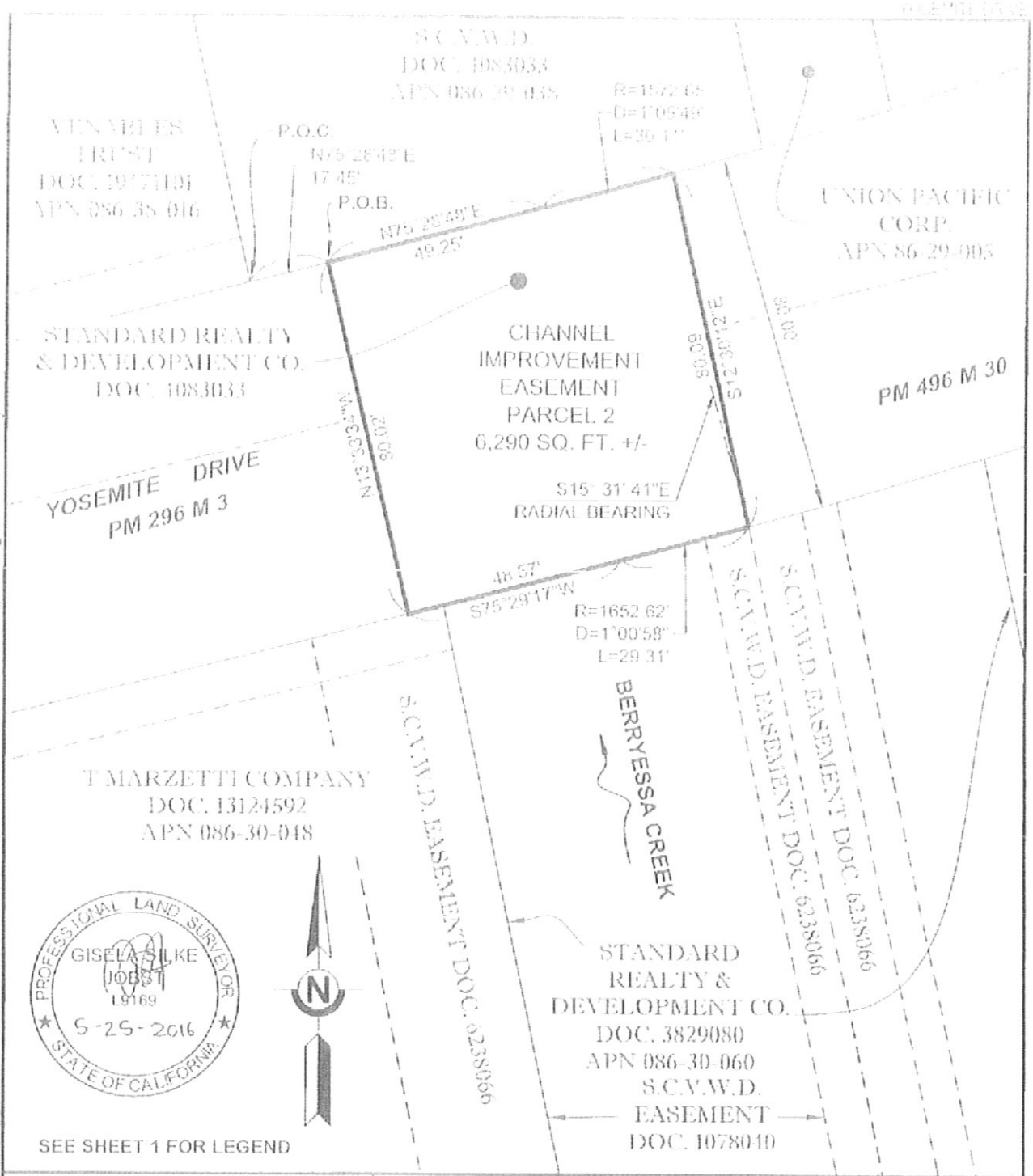

Santa Clara Valley Water District	SCALE: 1" =30'	PROJ. NO.	4017
		FILE NO.	82
		APN	N/A
		TITLE REPORT NO.	0616012496-RR
		DRAWN	RPC
		DATE	2/8/2016

REV	APPR	DATE	DESCRIPTION
1	SJP	5/4/16	MERGED 4017-80,82,88 AND 89 INTO SINGLE DOC
2			

S:\CVWD W:\ROWD\PROJECTS\BERRYESSA CREEK\2016_009\AUTOCAD\CURRENT\2016_009P_AT_4017XX_BERRYESSA.dwg

CONFORMED

EXHIBIT A-6

TO CHANNEL IMPROVEMENT CONSTRUCTION & MAINTENANCE AGREEMENT

Legal description and depiction of Railroad Easement Area
(APN No. 086-30-028)

(see attached)

CONFORMED

EXHIBIT A-6

SANTA CLARA VALLEY WATER DISTRICT
5750 Almaden Expressway
San Jose, CA 95118

Original By: CEM
Date: 11-30-2015

Revised By: NIP
Revised Date: 5-4-2016

PROJECT: BERRYESSA CREEK
PROPERTY: STANDARD REALTY AND DEV. CO.

APN: 086-30-078
RESC File No.: 401798

ALL THAT CERTAIN REAL PROPERTY SITUATE IN THE CITY OF MILPITAS, COUNTY OF SANTA CLARA, STATE OF CALIFORNIA, BEING A PORTION OF THE LANDS OF STANDARD REALTY AND DEVELOPMENT COMPANY PER THAT CERTAIN GRANT DEED RECORDED ON DECEMBER 28, 1970 AS DOCUMENT NUMBER 3829080 OF OFFICIAL RECORDS, IN THE OFFICE OF THE RECORDER, COUNTY OF SANTA CLARA, MORE PARTICULARLY DESCRIBED AS FOLLOWS:

CHANNEL IMPROVEMENT EASEMENT:

BEGINNING AT THE SOUTHWESTERLY TERMINUS OF THE LINE "SOUTH 77°11'28" WEST 4.00 FEET" OF PARCEL A AS DESCRIBED ON THAT CERTAIN GRANT EASEMENT FROM STANDARD REALTY AND DEVELOPMENT COMPANY TO THE SANTA CLARA VALLEY WATER DISTRICT, RECORDED ON NOVEMBER 13, 1978 AS DOCUMENT NUMBER 6198684 OF OFFICIAL RECORDS, IN THE OFFICE OF THE RECORDER, COUNTY OF SANTA CLARA;

THENCE ALONG SAID LINE OF SAID EASEMENT, NORTH 78°10'45" EAST, 4.00 FEET TO THE EASTERLY TERMINUS OF SAID LINE OF SAID EASEMENT;

THENCE SOUTH 12°23'53" EAST, 38.22 FEET;
THENCE SOUTH 11°20'38" EAST, 24.94 FEET;
THENCE SOUTH 11°06'40" EAST, 25.03 FEET;
THENCE SOUTH 11°10'08" EAST, 24.43 FEET;
THENCE SOUTH 14°44'08" EAST, 24.95 FEET;
THENCE SOUTH 11°42'49" EAST, 25.58 FEET;
THENCE SOUTH 11°02'27" EAST, 25.11 FEET;
THENCE SOUTH 11°02'38" EAST, 25.00 FEET;
THENCE SOUTH 11°02'52" EAST, 25.00 FEET;
THENCE SOUTH 11°02'36" EAST, 25.00 FEET;
THENCE SOUTH 11°02'29" EAST, 25.00 FEET;
THENCE SOUTH 11°02'32" EAST, 25.00 FEET;
THENCE SOUTH 11°02'24" EAST, 25.00 FEET;
THENCE SOUTH 11°03'16" EAST, 25.00 FEET;
THENCE SOUTH 11°02'56" EAST, 25.00 FEET;
THENCE SOUTH 11°00'12" EAST, 25.02 FEET;
THENCE SOUTH 11°02'44" EAST, 24.99 FEET;
THENCE SOUTH 11°03'42" EAST, 25.00 FEET;
THENCE SOUTH 11°04'21" EAST, 25.00 FEET;
THENCE SOUTH 11°06'52" EAST, 33.17 FEET TO A POINT ON THE EASTERLY LINE OF SAID PARCEL A OF SAID EASEMENT;

CONFORMED

EXHIBIT A-6

THENCE CONTINUING ALONG SAID EASTERLY LINE NORTH 11°49'15" WEST 6.136 FEET TO THE POINT OF BEGINNING.

CONTAINING 1,541 SQUARE FEET OF LAND MORE OR LESS.

BASIS OF BEARING:

BEARINGS AND DISTANCES HEREIN ARE BASED ON THE CALIFORNIA COORDINATE SYSTEM OF 1983, ZONE 3. MULTIPLY HEREIN DESCRIBED DISTANCES BY 1.00006432 TO OBTAIN GROUND DISTANCES.

SURVEYOR'S STATEMENT:

THE DESCRIPTION WAS PREPARED BY ME OR UNDER MY DIRECTION IN CONFORMANCE WITH THE REQUIREMENTS OF THE LAND SURVEYOR'S ACT.

GISELA SILKE JOBST, L9169

5-25-2016
Date

LICENSED LAND SURVEYOR
GISELA SILKE JOBST
L9169
STATE OF CALIFORNIA

CONFORMED

EXHIBIT A-6

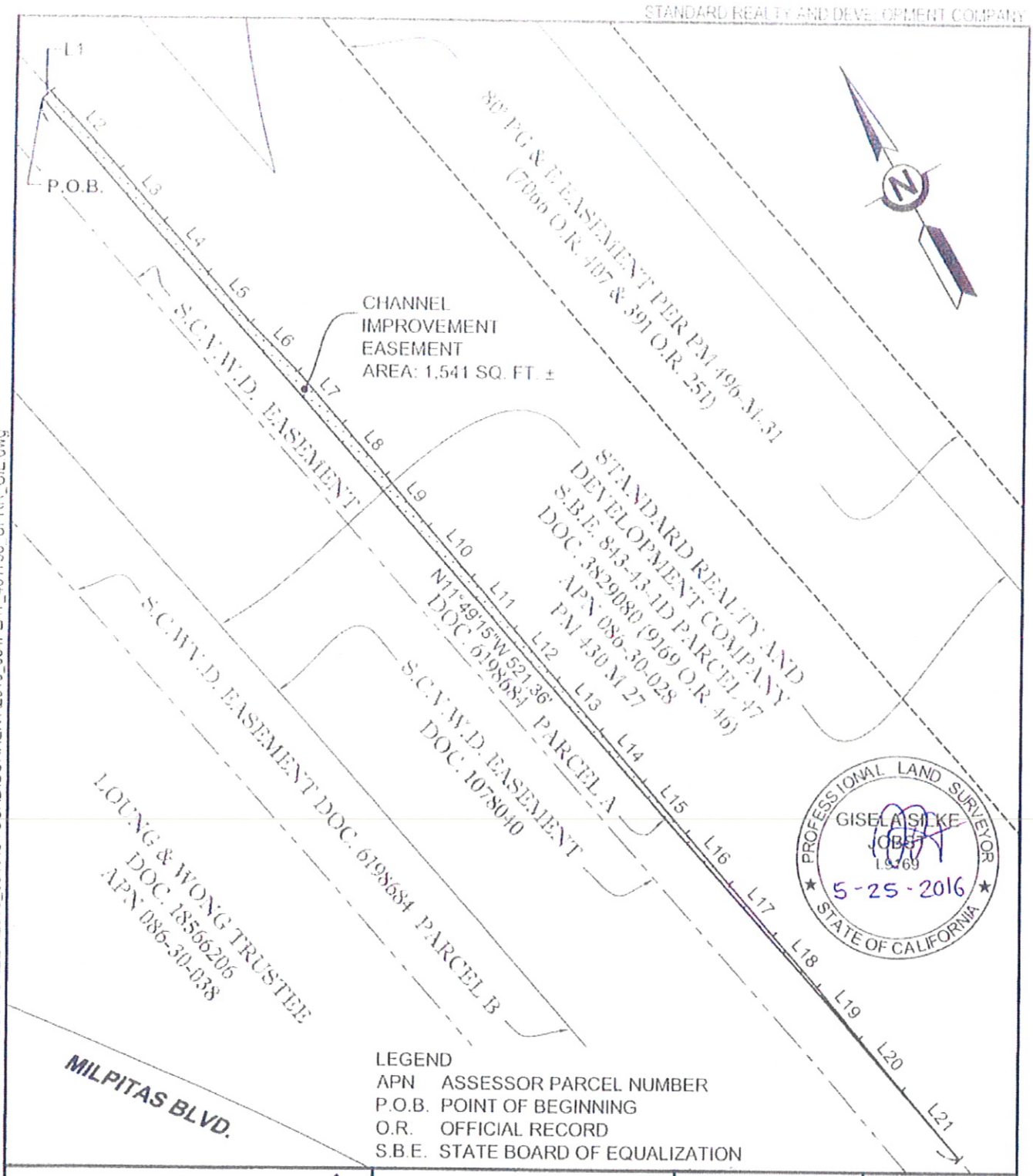

LEGEND
APN ASSESSOR PARCEL NUMBER
P.O.B. POINT OF BEGINNING
O.R. OFFICIAL RECORD
S.B.E. STATE BOARD OF EQUALIZATION

Santa Clara Valley Water District

SCALE: 1" = 50'

PROJ. NO.	4017
FILE NO.	98
APN	086-30-028
TITLE REPORT NO.	0616013055-RR
DRAWN	CLM
DATE	11/23/15

REV.	APPR.	DATE	DESCRIPTION
1	RPC	2/10/16	CHNL. IMP. EASE. WAS PERM. EASE.
2	SJP	5/4/16	MADE PARCEL 3 A STAND ALONE EASEMENT

Sheet 1 of 2

SCVWD W:\ROW\00PROJECTS\BERRYESSA CREEK\2016_054\AUTOCAD\CURRENT\2016_054PLAT_401798_UPRR_CIE.dwg

CONFORMED

EXHIBIT A-6

Line Table		
Line #	Direction	Length
L1	N78°10'45"E	4.00'
L2	S12°23'53"E	38.22'
L3	S11°20'38"E	24.94'
L4	S11°06'40"E	25.03'
L5	S11°10'08"E	24.43'
L6	S14°44'08"E	24.95'
L7	S11°42'49"E	25.58'
L8	S11°02'27"E	25.11'
L9	S11°02'38"E	25.00'
L10	S11°02'52"E	25.00'
L11	S11°02'36"E	25.00'

Line Table		
Line #	Direction	Length
L12	S11°02'29"E	25.00'
L13	S11°02'32"E	25.00'
L14	S11°02'24"E	25.00'
L15	S11°03'16"E	25.00'
L16	S11°02'56"E	25.00'
L17	S11°00'12"E	25.02'
L18	S11°02'44"E	24.99'
L19	S11°03'42"E	25.00'
L20	S11°04'21"E	25.00'
L21	S11°06'52"E	33.17'

PROFESSIONAL LAND SURVEYOR
GISELA SILKE JOBST
L9169
5-25-2016
STATE OF CALIFORNIA

Santa Clara Valley Water District

SCALE: NOT TO SCALE

PROJ. NO.	4017
FILE NO.	98
APN	086-30-028
TITLE REPORT NO.	0616013055-RR
DRAWN	CLM
DATE	11/24/15

REV.	APPR.	DATE	DESCRIPTION
1	SJP	5/4/16	MADE PARCEL 3 A STAND ALONE EASEMENT
2			

Sheet 2 of 2

SCVWD W:\ROW\00PROJECTS\BERRYESSA CREEK\2016_054\AUTOCAD\CURRENT\2016_054PLAT_401798_UPRR_CIE.dwg

CONFORMED

EXHIBIT A-7

TO CHANNEL IMPROVEMENT CONSTRUCTION & MAINTENANCE AGREEMENT

Legal description and depiction of Railroad Easement Area
(Montague Expressway)

(see attached)

CONFORMED

EXHIBIT A-7

PARCEL 3 - CHANNEL IMPROVEMENT EASEMENT:

ALL THAT CERTAIN REAL PROPERTY SITUATE IN THE CITY OF MILPITAS, COUNTY OF SANTA CLARA, STATE OF CALIFORNIA, BEING A PORTION OF MONTAGUE EXPRESSWAY (FORMERLY KNOWN AS LANDESS AVENUE) AS SHOWN ON THAT CERTAIN RECORD OF SURVEY FILED ON SEPTEMBER 7, 1972 IN BOOK 308 OF MAPS AT PAGE 18, IN THE OFFICE OF THE RECORDER, COUNTY OF SANTA CLARA, MORE PARTICULARLY DESCRIBED AS FOLLOWS:

BEGINNING AT A POINT ON THE WEST LINE OF THAT CERTAIN EASEMENT RETAINED BY THE SANTA CLARA VALLEY WATER DISTRICT PER THAT CERTAIN QUITCLAIM DEED RECORDED ON APRIL 5, 2000 AS DOCUMENT NUMBER 15204021 OF OFFICIAL RECORDS, IN THE OFFICE OF THE RECORDER, COUNTY OF SANTA CLARA, SAID POINT ALSO BEING ON THE SOUTH LINE OF MONTAGUE EXPRESSWAY;

THENCE ALONG SAID EASEMENT THE FOLLOWING FOUR COURSES:

NORTH 11°48'26" WEST, 47.50 FEET;
NORTH 69°46'00" EAST, 67.75 FEET;
SOUTH 20°14'00" EAST, 35.00 FEET;
NORTH 69°46'00" EAST, 7.76 FEET;

THENCE LEAVING SAID EASEMENT, NORTH 11°47'56" WEST, 74.97 FEET;

THENCE SOUTH 69°48'25" WEST, 20.20 FEET TO THE SOUTHEAST CORNER OF THAT CERTAIN 60.00 FOOT WIDE EASEMENT GRANTED TO THE SANTA CLARA COUNTY FLOOD CONTROL AND WATER CONSERVATION DISTRICT (NOW KNOWN AS THE SANTA CLARA VALLEY WATER DISTRICT) PER THAT CERTAIN GRANT DEED RECORDED ON APRIL 19, 1955 AS DOCUMENT NUMBER 1078042 OF OFFICIAL RECORDS, IN THE OFFICE OF THE RECORDER, COUNTY OF SANTA CLARA;

THENCE ALONG THE SOUTHERLY LINE OF SAID EASEMENT, SOUTH 69°48'25" WEST, 60.66 FEET;

THENCE ALONG THE PROLONGATION OF SAID SOUTHERLY LINE, SOUTH 69°48'25" WEST, 10.10 FEET TO A POINT ON THE EASTERLY RIGHT-OF-WAY LINE OF MILPITAS BOULEVARD;

THENCE ALONG SAID EASTERLY RIGHT-OF-WAY LINE OF MILPITAS BOULEVARD, SOUTH 11°50'30" EAST, 87.15 FEET TO A POINT ON THE SOUTH LINE OF MONTAGUE EXPRESSWAY;

THENCE ALONG SAID SOUTH LINE NORTH 69°46'00" EAST, 10.21 FEET TO THE **POINT OF BEGINNING**.

CONTAINING 4,407 SQUARE FEET OF LAND, MORE OR LESS.

CONFORMED

EXHIBIT A-7

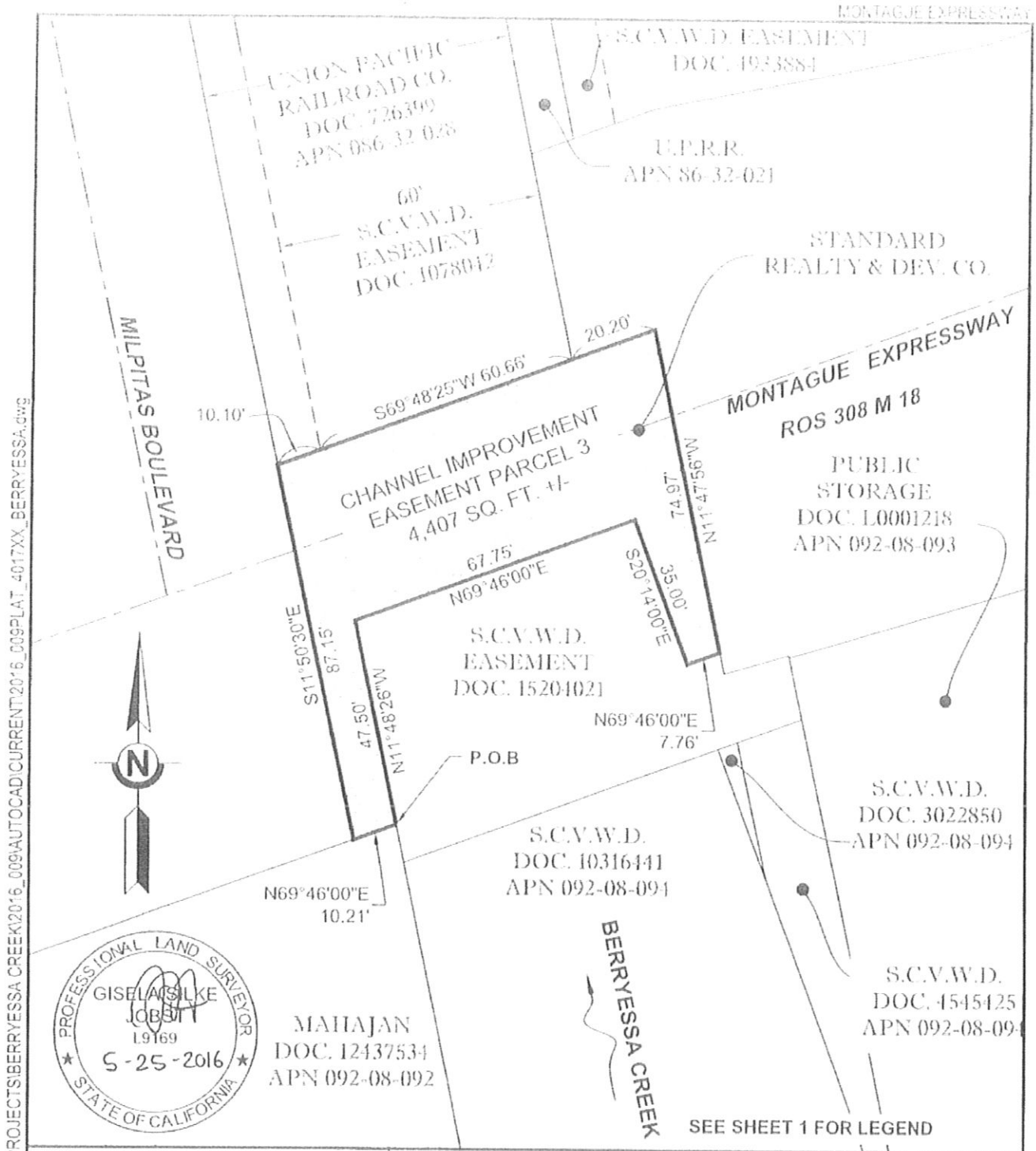

SCVWD W:\ROW\00PROJECTS\BERRYESSA CREEK\2016_009\AUTOCAD\CURRENT\2016_009PLAT_4017XX_BERRYESSA.dwg

Santa Clara Valley Water District	SCALE: 1" = 30'	PROJ. NO.	4017
		FILE NO.	88
		APN	N/A
REV. / APPR. / DATE	DESCRIPTION	TITLE REPORT NO.	616012501-RR
1 / SJP / 5/4/16	MERGED 4017-80,82,88 AND 89 INTO SINGLE DOC.	DRAWN	RPC
2		DATE	2/8/2016

CONFORMED

EXHIBIT A-8

TO CHANNEL IMPROVEMENT CONSTRUCTION & MAINTENANCE AGREEMENT

General Depiction of Temporary License Area

(see attached)

CONFORMED

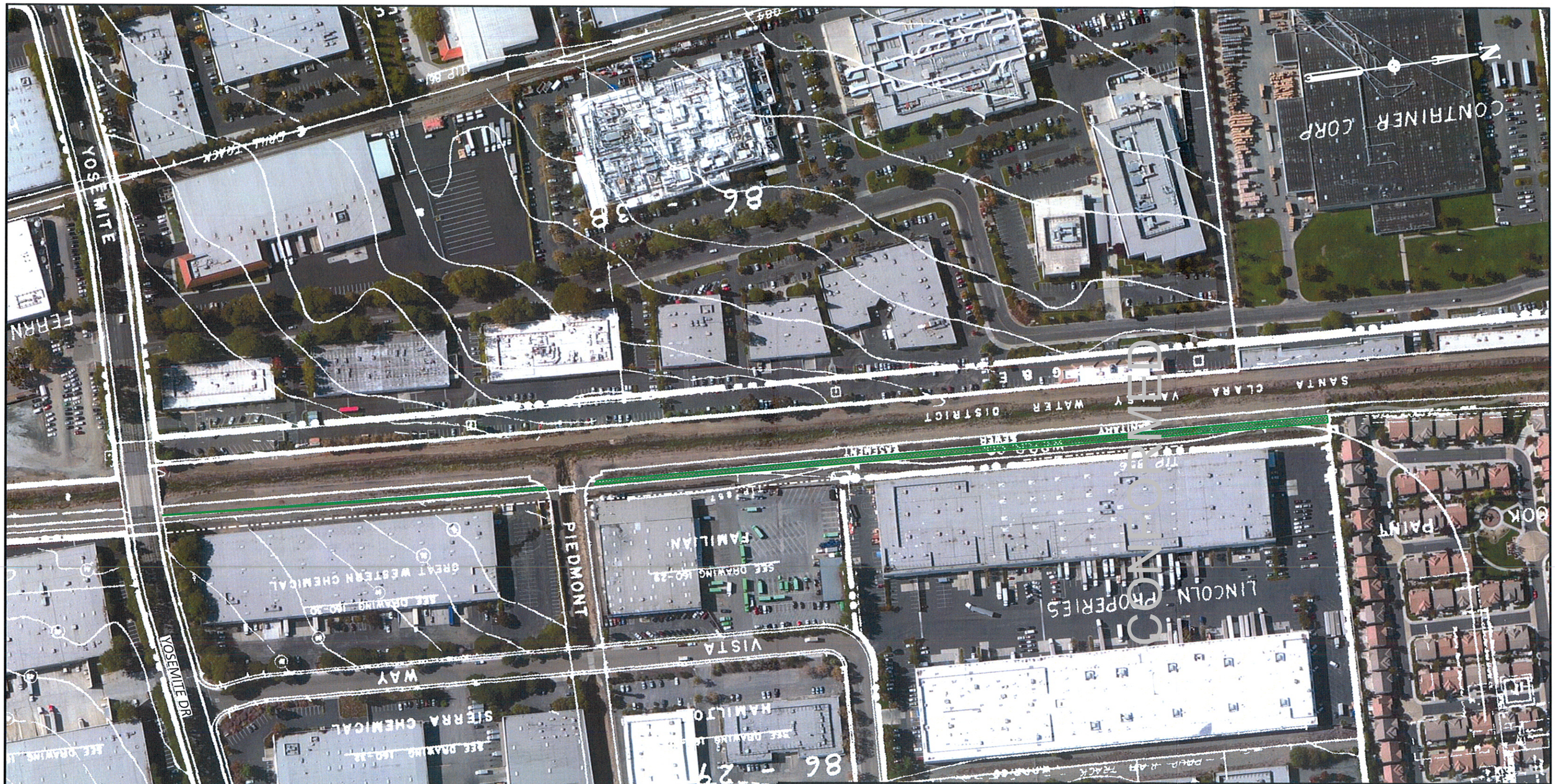

LEGEND:

TEMPORARY LICENSE AREA

UPRRCO. R/W OUTLINED

CADD FILENAME	0296719.DGN
SCAN FILENAME	0296719-CA45840.TIF

NOTE: BEFORE YOU BEGIN ANY WORK, SEE AGREEMENT FOR FIBER OPTIC PROVISIONS.

EXHIBIT "A-8"

UNION PACIFIC RAILROAD COMPANY

MILPITAS, SANTA CLARA COUNTY, CA

M.P. 11.40 TO 10.93 - MILPITAS INDUSTRIAL LEAD

TO ACCOMPANY AGREEMENT WITH
SANTA CLARA VALLEY WATER DISTRICT
WP V-12 / 4
SCALE: 1" = 200'

OFFICE OF REAL ESTATE
OMAHA, NEBRASKA DATE: 5-23-2016

COB FILE: 2967-19

EXHIBIT B

TO CHANNEL IMPROVEMENT CONSTRUCTION & MAINTENANCE AGREEMENT

Section 1. LIMITATION AND SUBORDINATION OF RIGHTS GRANTED.

a) The District's rights under this Agreement are subject and subordinate to the prior and continuing right and obligation of each of Standard and Railroad to use and maintain its entire property (including the Easement Property) to construct, add, maintain, repair, renew, use, operate, change, modify or relocate railroad tracks, signal, communication, fiber optics and other wirelines, pipelines and other facilities upon, under, over, along or across any or all parts of its property, all or any of which may be freely done by Standard and/or Railroad, as applicable; provided, however, that any use of the Easement Property by Standard and/or Railroad, as applicable, shall not interfere with or abridge the rights and easements acquired by the District hereunder.

b) This Agreement is also subject to all outstanding superior rights (including without limitation those in favor of easement holders, licensees and lessees of Standard's and/or Railroad's property, and others) and the right of Standard and/or Railroad, as applicable, to renew and extend the same, and is made without covenant of title or for quiet enjoyment. It shall be District's sole obligation to obtain such additional permission, licenses and grants necessary on account of any such existing rights. Notwithstanding the foregoing, each of Standard and Railroad understand and agree that it shall not grant a future right in the Easement Property, as applicable, that expressly interferes with or abridges the rights and easements acquired by the District hereunder.

c) The District and Railroad hereby acknowledge and agree that nothing contained in this Agreement shall be deemed to waive or diminish any legal preemption or preclusion that may apply to Railroad because of its status as a common carrier regulated by the federal government (including without limitation those provisions contained in 49 U.S.C. § 10501), and nothing contained in this Agreement shall be interpreted to suggest that Railroad has submitted, or will submit, to the jurisdiction or application of any local, state or federal levee or flood protection entity or laws.

Section 2. PLANS.

a) The District has submitted (or, as applicable, has caused USACE and/or Contractors to submit) plans showing design, specifications, and methods of procedure to Railroad for the portion of the Project located within the Easement Property and/or affecting Railroad's facilities or operations within the Project Area for Railroad's approval, in Railroad's sole discretion, at the design completion level of sixty percent (60%).

b) Prior to commencing the Project and any Project Work within the Project Area, the District shall submit (or, as applicable, shall cause USACE and/or Contractors to submit) to Railroad for Railroad's review and approval, in Railroad's sole discretion, the plans showing

CONFORMED

design, specifications, and methods of procedure for the portion of the Project located within the Easement Property and/or affecting Railroad's facilities or operations within the Project Area, at a minimum, at the ninety percent (90%) and the one hundred percent (100%) design completion levels. The District shall not commence the Project or any Project Work within the Project Area before the Plans have been approved in writing by Railroad's Vice President Engineering Services or his designated representative. Routine maintenance activities for sediment removal, graffiti removal and vegetation management are not subject to this Section 2, provided that such activities do not cause any deviations from the Plans and do not otherwise impact the operations, functionality or safety of Railroad.

b) "**Plans**" means the final one hundred percent (100%) completed plans, specifications, methods of procedures, and conditions of approval (including, without limitation, the plans, specifications, methods of procedure, and approval conditions for drainage, shoring, sheeting and excavations affecting the Easement Property, Temporary License Area, Railroad's right of way, other property, and railroad facilities) for the portion of the Project located within the Project Area that are approved in writing, by Railroad's Vice President Engineering-Design or his authorized representative. The Plans are hereby made a part of this Agreement by reference.

c) The Project, and all Project Work, shall be performed by the District (or another party on behalf of the District as permitted herein) to the satisfaction of Railroad, and in full conformance with the Plans. No changes in the Plans approved by Railroad may be made unless Railroad consents in writing to such changes.

d) Railroad shall have the right, if it so elects, as a condition of plan approval, to itself provide or require the District to provide, generally applied Railroad standards for protection and support that the Railroad deems appropriate for assuring the safety and continuity of its track and railroad operations and facilities during or after completion of Project and any Project Work. In the event Railroad itself provides such protection or support, the expenses incurred by Railroad in connection therewith shall be deemed Reimbursable Costs in accordance with Article 2 of this Agreement. Conditions of approval may also include without limitation, District's compliance with standards and specifications developed, endorsed or adopted by Railroad and/or AREMA as well as all applicable laws, rules and regulations. Railroad agrees to provide as much supporting documentation as is customarily provided by Railroad for projects of this type.

e) Intentionally Deleted.

f) Notwithstanding Railroad's review and approval of any plans (including the Plans), Railroad is not responsible for the design, functionality, or permitting of the Project improvements, the Project or any Project Work. Railroad's plan review and approval is limited to Railroad's perceived impact of the Project improvements, the Project and any Project Work on track and railroad operations and facilities. Railroad makes no representations or warranty whatsoever regarding the Plans, including without limitation any representations or warranty as to their validity, accuracy, legal compliance or completeness. Any reliance by District or others

CONFORMED

(including without limitation, USACE and any Contractor) on the Plans is at the risk of the District and such others.

Section 3. PERMITS.

Railroad shall have no obligation to obtain (or to be responsible for any costs or expenses associated with) any federal, state and local permits that may be required for the Project and any Project Work. Railroad will coordinate any permits required for the performance of the at-grade roadway crossing work, at the District's cost and expense.

Section 4. CONSTRUCTION, MAINTENANCE AND OPERATION.

a) The District, at its sole expense, shall keep and operate the Project improvements on the Easement Property in a good and safe condition. The District shall keep the Easement Property free and clear of vegetation, debris, sediment or obstructive matter which may or could interfere with or impede the proper functioning of drainage or Railroad's trains, property, facilities and operations.

b) The District shall not cross Railroad's track with any equipment except at existing, open public crossings, unless Railroad and the District have made a separate written crossing agreement in accordance with Article 9 above. When not in use, the District's equipment and materials shall be kept at least twenty five (25) feet from the centerline of the nearest railroad track. Equipment includes without limitation vehicles, tools, and machinery.

c) Except in those areas where no facilities were permitted on Plans because of clearance to the Railroad's trackage, the District shall provide, maintain, and keep in place at all times adequate barrier protection or gates on the portion of the Project improvements located on the Easement Property to prevent persons, vehicles and equipment entering on the Project Area or crossing Railroad's tracks via the Project Area.

d) During the performance of the Project or any Project Work, the District shall not excavate on any embankment or near the toe of any embankment which supports or stabilizes a track or other railroad facility without prior written plan approval of Railroad. In the event of any instability or settlement of such embankment, track or railroad facility related to any excavation for the Project or any Project Work, the District, at its sole expense, shall restore Railroad's embankment to its proper grade, slope, composition and dimensions. Railroad may elect to restore such embankment, tracks and railroad facilities using Railroad's work force and material at the District's sole expense.

e) The District shall protect at all times Railroad's personnel, trains, property, facilities and operations, including without limitation the track and all of its support components, from damage related to or arising from the Project improvements, the Project or Project Work. Railroad has the right to require and furnish during any Project Work, at the District's sole expense, all flagging and/or other protection which, in Railroad's sole judgment, are appropriate or desirable for promoting the continuity of railroad operations and/or the safety of Railroad's personnel, trains, property, facilities, and operations.

CONFORMED

Section 5. **NOTICE OF COMMENCEMENT OF WORK, FLAGGING.**

a) The District agrees to coordinate (and shall cause USACE and/or any Contractors to coordinate) all Project Work with the following Railroad representative or his or her duly authorized representative (the "**Railroad Representative**"):

Union Pacific Railroad Company
Manager of Track Maintenance
37950 Central Court, Suite B
Newark, California 94560

Subject to the advance notice requirements included in Section 14 below, the District agrees to notify the Railroad Representative at least fifteen (15) days in advance of the District commencing any Project Work, and at least thirty (30) days in advance of the proposed performance of any activity or work in which any person or equipment will be within twenty-five (25) feet of any track, or will be near enough to any track that any equipment extension (including without limitation a crane boom) can reach to within twenty-five (25) feet of any track, and in no event will the District access, and the District shall be responsible for ensuring that neither USACE nor any Contractor accesses, any Standard property and/or Railroad property within twenty-five (25) feet of any track until Railroad advises the District it is safe to do so. In an emergency situation requiring immediate attention, the District shall provide as much notice as practicable to the Railroad Representative before commencing any work or activity permitted by this Agreement. Equipment includes without limitation vehicles, tools, and machinery. **Subject to the foregoing, in an emergency situation requiring immediate attention, the District will also call Railroad via the Response Management Communications Center at 1-888-877-7267.** Notwithstanding the foregoing notice requirements in this Section 5, the District shall not be required to provide such notice for any day to day use by the District for ingress and egress of those roadways located on the Easement Property that are separated from Railroad's trackage by a fence or that portion of the roadway adjacent thereto where the parties have permitted no fence to be installed due to clearance issues; provided, however, that the District shall be required to provide notice if any equipment extension (including without limitation a crane boom) can reach beyond the edge of the Easement Property closest to the Railroad's trackage. For the avoidance of doubt, day to day use of the roadway for ingress or egress shall not include any work being performed on or about the roadway.

b) Upon receipt of the notice required by Section 5(a) above, the Railroad Representative will determine and inform the District whether a flagman need be present and whether the District need implement any special protective or safety measures. If any flagmen or other special protective or safety measures are performed by the Railroad, such services will be provided at the District's expense with the understanding that if Railroad provides any flagging or other services, the District shall not be relieved of any of its responsibilities or liabilities set forth herein.

CONFORMED

c) The District shall prohibit all work and activity within twenty-five (25) feet of a track's centerline during the times that the flagging or other special protective or safety measures required by the Railroad Representative are not present or active at the activity or work site.

d) The District acknowledges that:

i) a flagman is paid one and one-half times the current hourly rate for overtime, Saturdays and Sundays; and two and one-half times current hourly rate for holidays.

ii) a flagman's wage rates are subject to change, at any time, by law or by agreement between the Railroad and its employees, and may be retroactive as a result of negotiations or a ruling of an authorized government agency. Additional charges on labor are also subject to change. If the wage rate or additional charges are changed, the District shall pay on the basis of the new rates and charges.

iii) reimbursement to the Railroad will be required covering the full eight hour day during which a flagman is furnished, unless he or she can be assigned to other Railroad work during a portion of such day, in which event reimbursement will not be required for the portion of the day during which the flagman is engaged in other work. Reimbursement will also be required for any day not actually worked by said flagman following his assignment to work on the project for which the Railroad is required to pay the flagman and which could not reasonably be avoided by the Railroad by assignment of such flagman to other work, even though the District may not be working during such time.

e) All expenses connected with the furnishing of a flagman or other special protective or safety measures shall be at the sole cost and expense of the Contractor and the District. The District may elect to have Railroad initially send bills for such expenses to the Contractor. For projects having duration beyond 30 days, Railroad may bill such expenses on an installment basis as work progresses. Railroad and shall have one hundred eighty (180) days to calculate and send final billing for such expenses to the District or Contractor after Railroad has been notified in writing by the District that the project work has been completed. The District or Contractor shall pay the progressive and final billing within thirty (30) days after its receipt of billing. The District shall pay Railroad for all bills which are initially to be billed to the District or which Contractor has not paid, within thirty (30) days after District's receipt of billing.

Section 6. <u>INTENTIONALLY DELETED.</u>

Section 7. <u>NO INTERFERENCE WITH RAILROAD'S OPERATION AND SAFETY.</u>

The Project improvements on the Easement Property shall be kept in such condition, and all Project Work and subsequent use of and work performed within the Easement Property shall be performed in such manner, as to prevent any and all interference whatsoever with the constant, continuous and uninterrupted use of the tracks, property and facilities of the Railroad

CONFORMED

and/or Standard, and nothing shall be done or suffered to be done by the District or USACE at any time that would in any manner impair the safety thereof.

Section 8. PROTECTION OF FIBER OPTIC CABLE SYSTEMS.

a) Fiber optic cable systems may be buried on Standard's property and/or Railroad's property. Protection of the fiber optic cable systems is of extreme importance since any break could disrupt service to users resulting in business interruption and loss of revenue and profits. The District shall telephone the Railroad at 1-800-336-9193 (a 24-hour number) to determine if fiber optic cable is buried anywhere on the portion of Standard's property and/or Railroad's property to be used by the District. If it is, the District will telephone the telecommunications company(ies) involved, arrange for a cable locator, make arrangements for relocation or other protection of the fiber optic cable, and will commence no work on Standard's property and/or Railroad's property until all such protection or relocation has been accomplished.

b) In addition to other indemnity provisions in this Agreement, the District shall indemnify and hold Standard and Railroad harmless from and against all costs, liability and expense whatsoever (including, without limitation, attorneys' fees, court costs and expenses) arising out of any act or omission of the District, its Contractor, agents and/or employees, USACE or any of its Contractors, that causes or contributes to (1) any damage to or destruction of any telecommunications system on Standard's property and/or Railroad's property, and (2) any injury to or death of any person employed by or on behalf of any telecommunications company, and/or its contractor, agents and/or employees, on Standard's property and/or Railroad's property. The District shall not have or seek recourse against Standard or Railroad for any claim or cause of action for alleged loss of profits or revenue or loss of service or other consequential damage to a telecommunication company using Standard's property and/or Railroad's property or a customer or user of services of the fiber optic cable on Standard's property and/or Railroad's property.

Section 9. CLAIMS AND LIENS FOR LABOR AND MATERIAL; TAXES.

a) The District shall fully pay for all materials, work and labor placed or performed on Standard's property and/or Railroad's property in connection with the Project or Project Work, and shall not permit or suffer any mechanic's or material man's lien of any kind or nature to be enforced against Standard's property and/or Railroad's property for any labor performed, work done or materials furnished thereon at the instance or request or on behalf of the District. The District shall indemnify and hold harmless Standard and Railroad against and from any and all liens, claims, demands, costs and expenses of whatsoever nature in any way connected with or growing out of such work done, labor performed, or materials furnished.

b) The District shall promptly pay or discharge all taxes, charges and assessments levied upon, in respect to, or on account of the Project improvements, to prevent the same from becoming a charge or lien upon Standard property and/or Railroad property, and so that the taxes, charges and assessments levied upon or in respect to Standard's property and/or Railroad's property shall not be increased because of the location, construction or maintenance of any Project improvements placed upon Standard's property and/or Railroad's property, or on account

CONFORMED

of any District interest therein. Where such tax, charge or assessment may not be separately made or assessed to the District, but shall be included in the assessment of Standard's property and/or Railroad's property, then the District shall pay to Standard or Railroad, as applicable, an equitable proportion of such taxes, charges and assessments determined by the value of the District's property upon property of Standard and/or Railroad as compared with the entire value of such property.

Section 10. RESTORATION OF RAILROAD'S FENCES AND FACILITIES.

In the event Standard and/or Railroad authorizes the District to take down any fence of Standard and/or Railroad or in any manner move or disturb any other facility of Standard and/or Railroad in connection with the Project or the Project Work, then in that event the District shall, as soon as possible and at the District's sole expense, restore such fence and other facility to the same condition as the same were in before such fence was taken down or such other facility was moved or disturbed, and in addition to any other indemnification provision of this Agreement, the District shall indemnify and hold harmless Standard and/or Railroad (as applicable) and their officers, agents and employees, against and from any and all liability, loss, damages, claims, demands, costs and expenses of whatsoever nature, including court costs and attorneys' fees, which may result from injury to or death of persons whomsoever, or damage to or loss or destruction of property whatsoever, when such injury, death, damage, loss or destruction grows out of or arises from the taking down of any fence or the moving or disturbance of any other facility of Standard and/or Railroad, as applicable.

Section 11. INDEMNITY.

a) As used in this Section, "Railroad" includes Standard and other railroad companies using Standard's property and/or Railroad's property at or near the location of the Project improvements and their officers, agents, and employees; "**Loss**" includes loss, damage, claims, demands, actions, causes of action, penalties, costs, and expenses of whatsoever nature, including court costs and attorneys' fees, which may result from: (i) injury to or death of persons whomsoever (including without limitation the Railroad's, the District's, USACE's and any Contractor's officers, agents, and employees, as well as any other person); and (ii) damage to or loss or destruction of property whatsoever (including without limitation the District's property, any Contractor's property, adjacent property and crops, Railroad's roadbed, tracks, equipment, and other property, and property in Railroad's care or custody).

b) To the extent it may lawfully do so, the District agrees to assume the risk of loss or damage to the Project improvements and to defend, indemnify and hold harmless the Railroad from any Loss which is due to or arises from (i) the construction, operation, maintenance, repair, reconstruction, renewal, removal, modification, use or existence of the Project improvements and appurtenances thereto, or any part thereof, including without limitation any flow of water or flooding from, through or around the Project improvements, or (ii) failure of the District, USACE or any Contractor to comply with or perform any of the terms and conditions set forth in this Agreement; provided, however, that the foregoing indemnification provisions shall not apply to any claims, damages, costs and expenses that have been fully compensated for through the insurance coverage required of the District or Contractor by this Agreement. The foregoing

CONFORMED

indemnification provisions shall apply in all situations, including without limitation, situations where the Loss is caused in whole or part by Railroad's negligence, except to the extent that the Loss is caused by the sole and direct gross negligence or intentional misconduct of Railroad.

c) Any liability of any party hereunder to one of its employees under any Workers' Compensation Act or the Federal Employers' Liability Act shall not be questioned or in any way challenged by the other party, nor shall any jury or court findings, resulting from any employee's suit against either party pursuant to any such Act(s), be relied upon or used by either party in any attempt to assert common law liability against the other.

Section 12. COMPLIANCE WITH LAWS.

The District shall comply with, and shall cause USACE to comply with, all applicable federal, state and local laws, regulations and enactments affecting the Project and the Project Work. The District shall use only such methods as are consistent with the safety of the District, Contractor, Standard and Railroad, and their officers, agents, employees, Standard's property, Railroad's property, and the public in general. The District (without limiting the generality of the foregoing) shall comply, and shall cause USACE to comply, with all applicable state and federal occupational safety and health acts and regulations. All Federal Railroad Administration regulations shall be followed when activity or work is performed on Standard's property and/or Railroad's property. If any failure by the District to comply with, or cause compliance with, any such laws, regulations, and enactments, shall result in any fine, penalty, cost or charge being assessed, imposed or charged against Standard and/or Railroad, the District shall reimburse and indemnify Standard and/or Railroad for any such fine, penalty, cost or charge, including without limitation attorneys' fees, court costs and expenses. The District further agrees in the event of any such action, upon notice thereof being provided by Standard and/or Railroad, as applicable, to defend such action free of cost, charge, or expense to Standard and/or Railroad, respectively.

Section 13. SUPERVISION BY DISTRICT.

The District, at its sole expense, shall fully and closely supervise Project and all Project Work on Railroad's property. The District's responsibility for safe conduct and adequate policing and supervision is not lessened or otherwise affected by Railroad's approval of any plans (including the Plans), or by Railroad's performance of the Railroad Work or collaboration in performance of any Project Work, or by the presence of Railroad's personnel at or near the Project Area, or by the District's or a Contractor's compliance with any requests or recommendations made by Railroad's personnel.

Section 14. SCHEDULE OF PROJECT WORK AND WORK WINDOWS.

a) Following thirty (30) days prior written notice from the District to the Railroad thereof, the District, USACE (as applicable) and Railroad shall meet with Contractor after a contract is awarded for the Project and/or Project Work for the purpose of negotiating and establishing a schedule detailing the timing and duration of the Project Work phases and sequences, and detailing the number, timing, duration, and frequency of work windows, as applicable. A work window is a time period during which a track is taken out of service to

CONFORMED

accommodate the Project Work. No work shall be performed on Standard's property and/or Railroad's property in connection with the Project or the Project Work until a schedule has been approved by Railroad in writing. The District shall inform and shall cause USACE to inform (as applicable) Contractor that Contractor cannot perform any Project Work on Standard's property and/or Railroad's property until such schedule has been approved by Railroad in writing. If multiple tracks are present, the District agrees not to remove (and shall cause any Contractor performing any Project Work not to remove) from service all existing tracks at the work site at the same time unless agreed to by Railroad in the Approved Work Schedule (as defined below) or by the Railroad Representative. Without limiting the generality of the foregoing (and notwithstanding the reference in the Plans to a 72 hour outage), Railroad agrees to provide two limited work windows subject to the following additional limitations. Railroad will provide one (1) outage for the Trestle Structure for a period not to exceed sixty (60) hours, and one (1) outage for the Piedmont Structure for a period not to exceed ninety (90) days. With respect to the Trestle Structure work window, the District shall provide to Railroad prior written notice of its request to initiate the Trestle Structure work to allow the Railroad sufficient time to order the related track materials. Upon the earlier to occur of (i) Railroad's notice to the District that the related track materials are available for installation or (ii) one hundred twenty (120) days after Railroad receives the District's request to initiate the Trestle Structure work, the District may provide to Railroad written notice requesting the work window for the Trestle Structure. Following the Railroad's receipt of such request, the parties shall reasonably cooperate to identify the dates and times the work window will be made available to the District, which coordination shall include Railroad's removal of the existing trackage on the Trestle Structure. With respect to the Piedmont Structure work window, the District shall provide to Railroad prior written notice of its request to initiate the Piedmont Structure work to allow the Railroad sufficient time to order the related track materials. Upon the earlier to occur of (i) Railroad's notice to the District that the related track materials are available for installation or (ii) one hundred twenty (120) days after Railroad receives the District's request to initiate the Piedmont Structure work, the District may provide to Railroad written notice requesting the work window for the Piedmont Structure. Following the Railroad's receipt of such request, the parties shall reasonably cooperate to identify the dates and times the work window will be made available to the District, provided that such work window shall not be required to be provided less than forty-five (45) days after the Railroad receives the District's written request for the work window. The District acknowledges that the work windows include any time required for the Railroad to inspect the applicable structure to ensure that the same has been installed in compliance with the Plans and the other requirements contained in this Agreement. If the District fails to timely perform the Trestle Structure work as required herein, such that the applicable structure cannot be turned over to the Railroad on or before the expiration of the applicable work window with completed construction in accordance with the Plans, the District shall be required to pay damages equal to Ten Thousand and No/100 Dollars $10,000.00 per day until such issues are fully remedied to the reasonable satisfaction of the Railroad. The District further acknowledges that the determination of dates and times for the word windows are subject to a number of factors, including without limitation, availability of the Railroad's forces to perform its portion of the work, operating schedules, customer obligations and availability of materials, and may need to be rescheduled to due to the Railroad's forces being unavailable or for matters outside the reasonable control of the Railroad (including without limitation train derailments). All time

CONFORMED

periods set forth herein (excluding the work windows) shall be subject to reasonable extension for any events outside of the control of the Railroad.

b) Once a schedule setting forth the minimum number, duration and frequency of work windows is agreed to by the parties pursuant to Section 14(a) above, such schedule shall be deemed a component of the Plans. Any work windows requested by Contractor or the District beyond the minimums agreed upon by the parties shall be subject to Railroad's approval.

c) "**Approved Work Schedule**" means the agreed-to timing and duration of the various Project Work phases, sequences and work windows, approved in writing by both Contractor, the District, and/or USACE, as applicable, and Railroad and which is based on minimums agreed to by the parties pursuant to this Section 14, subject to modification, restriction, rescheduling, and canceling as permitted herein. Whenever the term Approved Work Schedule is used herein, it includes the work schedule as it has been modified, restricted, or rescheduled by Railroad after initial approval by both parties. Such Approved Work Schedule shall be deemed a component of the Plans.

d) The District agrees that it will strictly comply (and require USACE and any Contractors, as applicable, to strictly comply) with all Approved Work Schedules. The District agrees that the Project Work shall be performed only in the sequence and only within the window periods set forth in an Approved Work Schedule, unless otherwise directed or authorized by the Railroad Representative.

e) The District agrees that any Project Work may be restricted and rescheduled as Railroad deems appropriate or necessary to accommodate Railroad's operations or alleviate train or track congestion. The District agrees that Railroad shall have the right to restrict, modify or cancel an Approved Work Schedule on short written notice or oral notice in the field including, without limitation, on the day of a scheduled work window, due to railroad operations or congestion on Railroad's track at the work site or on other portions of Railroad's track system. However, Railroad will not unreasonably restrict or reschedule the Project Work, or unreasonably restrict, modify or cancel Approved Work Schedules, and Railroad will do so only as appropriate or necessary in connection with Railroad's common carrier obligations. The District hereby waives all claims against Railroad for all damages whatsoever related to Railroad restricting or rescheduling Project Work and/or canceling, restricting or modifying an Approved Work Schedule. In the event that an Approved Work Schedule is cancelled or otherwise modified so as to prevent the District from proceeding with the Project Work, Railroad shall propose an alternative Approved Work Schedule to the District for review and approval to accommodate the Project Work.

Section 15. <u>RAILROAD MAY SHUT DOWN WORK AND REMEDY DISRUPTION.</u>

a) Railroad, following short written notice or oral notice in the field to the District, USACE's contracting officer representative (if in connection with the initial construction of the Project improvements) and/or Contractor, as applicable, shall have the right to immediately shut down all Project Work on Standard's property and/or Railroad's property and require the removal

CONFORMED

of all persons, vehicles and equipment from such property without Railroad incurring any liability to the District, Contractor or any other person or entity, if a phase of Project Work:

i) has not been completed, or appears to Railroad that it cannot be completed, within a respective work window set forth in an Approved Work Schedule; or

ii) is being conducted in an unsafe manner, or in a manner that is inconsistent with or in breach of this Agreement; or

iii) is being conducted in a manner which violates government law, rules or regulations, including without limitation Federal Railroad Administration or Occupational Safety and Health Administration rules and regulations.

b) If any Project Work is shut down by Railroad pursuant to this Section 15, and Railroad's railway operating schedule is disrupted as a result, all subsequent work windows can be delayed or modified by Railroad until after Railroad fully recovers its railway operating schedule, at Railroad's sole discretion.

c) In the event that the Project Work is shut down by Railroad pursuant to this Section 15, Railroad shall propose an alternative Approved Work Schedule to the District and/or USACE, as applicable, for review and approval to accommodate the Project Work. Any such Approved Work Schedule proposed by Railroad and approved hereunder shall not take effect until the District has modified or corrected its work procedures in such a manner to ensure the District can complete its work in strict compliance with an Approved Work Schedule.

d) The District agrees that if the District, USACE or any of their Contractors are unable or appears not likely to quickly remedy any disruption to Railroad's operations beyond any authorized work window pursuant to an Approved Work Schedule, then Railroad, at the District's expense, has the right (but not the obligation) to immediately use Railroad's personnel and equipment (or contracted personnel and equipment) to remedy or reduce the disruption.

Section 16. <u>SITE TO BE LEFT NEAT AND CLEAN.</u>

Upon completion of Project and any Project Work, the District shall remove from Standard's property and Railroad's property, as applicable, all machinery, equipment, temporary structures, debris and rubbish related to the Project Work and leave such property in a neat and clean condition satisfactory to Railroad.

Section 17. <u>RAILROAD NOT TO BEAR ANY COST.</u>

It is expressly made a condition of this Agreement that neither Railroad nor Standard is obligated to bear any costs (whether direct or indirect) with respect to the Project and/or any Project Work.

CONFORMED

Section 18. WAIVER OF BREACH.

The waiver by Standard or Railroad of the breach of any term, condition, or covenant herein contained to be kept, observed and performed by the District shall in no way impair the right of Standard or Railroad, as applicable, to avail itself of any remedy for any subsequent breach thereof.

Section 19. AGREEMENT NOT TO BE ASSIGNED.

The District shall not assign this Agreement, in whole or in part, or any rights herein granted, without the written consent of Standard and Railroad, and it is agreed that any transfer or assignment or attempted transfer or assignment of this Agreement or any of the rights herein granted, whether voluntary, by operation of law, or otherwise, without such consent in writing, shall be absolutely void and, at the option of Standard and Railroad, shall terminate this Agreement.

Section 20. SUCCESSORS AND ASSIGNS.

Subject to the provisions of Section 19 hereof, this Agreement shall be binding upon and inure to the benefit of the parties hereto, their heirs, executors, administrators, successors and assigns.

Section 21. NOTICES.

Any notices required or desired to be given under this Agreement shall be in writing and personally served, given by overnight express delivery, or given by mail. Telecopy notices shall be deemed valid only to the extent they are (a) actually received by the individual to whom addressed and (b) followed by delivery of actual notice in the manner described above within three (3) business days thereafter. Any notice given by mail shall be sent, postage prepaid, by certified mail, return receipt requested, addressed to the party to receive at the following address or at such other address as such party may from time to time direct in writing:

Railroad:	UNION PACIFIC RAILROAD COMPANY ATTN: Assistant Vice President – Real Estate 1400 Douglas Street, Mail Stop 1690 Omaha, Nebraska 68179
Standard:	c/o UNION PACIFIC RAILROAD COMPANY ATTN: Assistant Vice President – Real Estate 1400 Douglas Street, Mail Stop 1690 Omaha, Nebraska 68179
District:	SANTA CLARA VALLEY WATER DISTRICT ATTN: CLERK OF THE BOARD 5750 Almaden Expressway San Jose, California 95118-3686

CONFORMED

Express delivery notices shall be deemed to be given upon receipt. Postal notices shall be deemed to be given upon deposit with the United States Postal Service.

CONFORMED

EXHIBIT C

TO CHANNEL IMPROVEMENT CONSTRUCTION & MAINTENANCE AGREEMENT

Form of Contractor's Right of Entry Agreement

(see attached)

CONFORMED

CONTRACTOR'S
RIGHT OF ENTRY AGREEMENT

THIS AGREEMENT (this "Agreement") is made and entered into as of the _____ day of _____, 20_____,
by and between **UNION PACIFIC RAILROAD COMPANY**, a Delaware corporation ("Railroad"); and _____, a _____ corporation ("Contractor").

RECITALS:

Contractor has been hired by _____ to perform work relating to the Santa Clara Valley Water District Channel Improvement Project (the "work"), with all or a portion of such work to be performed on property of Railroad in the vicinity of Railroad's Milepost 10.69 to 12.19 on Railroad's Milpitas Industrial Lead located at or near Milpitas in Santa Clara County, State of California as such location is in the general location shown on the print marked **Exhibit A**, attached hereto and hereby made a part hereof, which work is the subject of a contract dated May 27th, 2016 between Railroad and Santa Clara Valley Water District.

Railroad is willing to permit Contractor to perform the work described above at the location described above subject to the terms and conditions contained in this Agreement

AGREEMENT:

NOW, THEREFORE, it is mutually agreed by and between Railroad and Contractor, as follows:

ARTICLE 1 - DEFINITION OF CONTRACTOR.

For purposes of this Agreement, all references in this agreement to Contractor shall include Contractor's contractors, subcontractors, officers, agents and employees, and others acting under its or their authority.

ARTICLE 2 - RIGHT GRANTED; PURPOSE.

Railroad hereby grants to Contractor the right, during the term hereinafter stated and upon and subject to each and all of the terms, provisions and conditions herein contained, to enter upon and have ingress to and egress from the property described in the Recitals for the purpose of performing the work described in the Recitals above. The right herein granted to Contractor is limited to those portions of Railroad's property specifically described herein, or as designated by the Railroad Representative named in Article 4.

ARTICLE 3 - TERMS AND CONDITIONS CONTAINED IN EXHIBITS B, C AND D.

The terms and conditions contained in **Exhibit B, Exhibit C** and **Exhibit D**, attached hereto, are hereby made a part of this Agreement.

ARTICLE 4 - ALL EXPENSES TO BE BORNE BY CONTRACTOR; RAILROAD REPRESENTATIVE.

A. Contractor shall bear any and all costs and expenses associated with any work performed by Contractor, or any costs or expenses incurred by Railroad relating to this Agreement.

CONFORMED

B. Contractor shall coordinate all of its work with the following Railroad representative or his or her duly authorized representative (the "Railroad Representative"):

ROBERT J. BRENNAN
MGR TRACK MNTCE
37950 Central Court, Ste B
Newark, CA 94560
rjbrenna@up.com
Work Phone: 402 501-3774
Cell Phone: 402 594-5960

C. Contractor, at its own expense, shall adequately police and supervise all work to be performed by Contractor and shall ensure that such work is performed in a safe manner as set forth in Section 7 of **Exhibit B**. The responsibility of Contractor for safe conduct and adequate policing and supervision of Contractor's work shall not be lessened or otherwise affected by Railroad's approval of plans and specifications involving the work, or by Railroad's collaboration in performance of any work, or by the presence at the work site of a Railroad Representative, or by compliance by Contractor with any requests or recommendations made by Railroad Representative.

ARTICLE 5 - SCHEDULE OF WORK ON A MONTHLY BASIS.

The Contractor, at its expense, shall provide on a monthly basis a detailed schedule of work to the Railroad Representative named in Article 4B above. The reports shall start at the execution of this Agreement and continue until this Agreement is terminated as provided in this Agreement or until the Contractor has completed all work on Railroad's property.

ARTICLE 6 - TERM; TERMINATION.

A. The grant of right herein made to Contractor shall commence on the date of this Agreement, and continue until _____, unless sooner terminated as herein provided, or at such time as Contractor has completed its work on Railroad's property, whichever is earlier. Contractor agrees to notify the Railroad Representative in writing when it has completed its work on Railroad's property.

B. This Agreement may be terminated by either party on ten (10) days written notice to the other party.

ARTICLE 7 - CERTIFICATE OF INSURANCE.

A. Before commencing any work, Contractor will provide Railroad with the (i) insurance binders, policies, certificates and endorsements set forth in **Exhibit C** of this Agreement, and (ii) the insurance endorsements obtained by each subcontractor as required under Section 12 of **Exhibit B** of this Agreement.

B. All insurance correspondence, binders, policies, certificates and endorsements shall be sent to:

Union Pacific Railroad Company
Real Estate Department
1400 Douglas Street, Mail Stop 1690
Omaha, NE 68179-1690
Attn: UPRR Folder No. 02967-19

ARTICLE 8 - DISMISSAL OF CONTRACTOR'S EMPLOYEE.

At the request of Railroad, Contractor shall remove from Railroad's property any employee of

CONFORMED

Contractor who fails to conform to the instructions of the Railroad Representative in connection with the work on Railroad's property, and any right of Contractor shall be suspended until such removal has occurred. Contractor shall indemnify Railroad against any claims arising from the removal of any such employee from Railroad's property.

ARTICLE 9- <u>ADMINISTRATIVE FEE</u>.

Upon the execution and delivery of this Agreement, Contractor shall pay to Railroad Five Hundred Dollars ($500.00) as reimbursement for clerical, administrative and handling expenses in connection with the processing of this Agreement.

ARTICLE 10 - <u>CROSSINGS; COMPLIANCE WITH MUTCD AND FRA GUIDELINES.</u>

A. No additional vehicular crossings (including temporary haul roads) or pedestrian crossings over Railroad's trackage shall be installed or used by Contractor without the prior written permission of Railroad.

B. Any permanent or temporary changes, including temporary traffic control, to crossings must conform to the Manual of Uniform Traffic Control Devices (MUTCD) and any applicable Federal Railroad Administration rules, regulations and guidelines, and must be reviewed by the Railroad prior to any changes being implemented. In the event the Railroad is found to be out of compliance with federal safety regulations due to the Contractor's modifications, negligence, or any other reason arising from the Contractor's presence on the Railroad's property, the Contractor agrees to assume liability for any civil penalties imposed upon the Railroad for such noncompliance.

ARTICLE 11.- <u>EXPLOSIVES</u>.

Explosives or other highly flammable substances shall not be stored or used on Railroad's property without the prior written approval of Railroad.

IN WITNESS WHEREOF, the parties hereto have duly executed this agreement in duplicate as of the date first herein written.

UNION PACIFIC RAILROAD COMPANY

By:_____
Title:_____

_____
(Name of Contractor)

By:_____
Title:_____

CONFORMED

EXHIBIT A
TO
CONTRACTOR'S RIGHT OF ENTRY AGREEMENT

Exhibit A will be a print showing the general location of the work site.

CONFORMED

PARCEL #2 = 0.23 ACRES / 9,976 S.F.
PARCEL #1 = 0.38 ACRES / 16,742 S.F.
PARCEL #4 = 0.03 ACRES / 1,341 S.F.
PARCEL #5 = 0.14 ACRES / 6,230 S.F.
TEMPORARY LICENSE AREAS
PIEDMONT STRUCTURE
PARCEL #7 = 0.29 ACRES / 12,746 S.F.
PARCEL #6 = 0.11 ACRES / 4,800 S.F.
YOSEMITE
AMES
PIEDMONT
WRIGLEY
CREEK
DRIVE
MILPITAS
BLVD
TOWN CENTER
LINCOLN PROPERTIES
SIERRA CHEMICAL CO
MERITEX CHEMICAL CO
CONTINENTAL
EVARD
CAPITOL EXPY
LEGEND:
EASEMENT AREA
TEMPORARY LICENSE AREA
BRIDGE STRUCTURE
RESTATED EASEMENTS
UPRRCO. R/W OUTLINED
CADD FILENAME 0296719.DGN
SCAN FILENAME 0296719-CA45840.TIF
NOTE: BEFORE YOU BEGIN ANY WORK, SEE AGREEMENT FOR FIBER OPTIC PROVISIONS.
EXHIBIT "A"
PROJECT AREA
UNION PACIFIC RAILROAD COMPANY
MILPITAS, SANTA CLARA COUNTY, CA
M.P. 10.69 TO 12.19 – MILPITAS INDUSTRIAL LEAD
TO ACCOMPANY AGREEMENT WITH
SANTA CLARA VALLEY WATER DISTRICT
MP V-12 / 4
SCALE: 1" = 200'
OFFICE OF REAL ESTATE
OMAHA, NEBRASKA DATE: 5-23-2016
COB FILE: 2967-19

CONFORMED

EXHIBIT B
TO
CONTRACTOR'S RIGHT OF ENTRY AGREEMENT

Section 1. NOTICE OF COMMENCEMENT OF WORK - FLAGGING.

A. Contractor agrees to notify the Railroad Representative at least ten (10) working days in advance of Contractor commencing its work and at least thirty (30) working days in advance of proposed performance of any work by Contractor in which any person or equipment will be within twenty-five (25) feet of any track, or will be near enough to any track that any equipment extension (such as, but not limited to, a crane boom) will reach to within twenty-five (25) feet of any track. No work of any kind shall be performed, and no person, equipment, machinery, tool(s), material(s), vehicle(s), or thing(s) shall be located, operated, placed, or stored within twenty-five (25) feet of any of Railroad's track(s) at any time, for any reason, unless and until a Railroad flagman is provided to watch for trains. Upon receipt of such thirty (30)-day notice, the Railroad Representative will determine and inform Contractor whether a flagman need be present and whether Contractor needs to implement any special protective or safety measures. If flagging or other special protective or safety measures are performed by Railroad, Railroad will bill Contractor for such expenses incurred by Railroad, unless Railroad and a federal, state or local governmental entity have agreed that Railroad is to bill such expenses to the federal, state or local governmental entity. If Railroad will be sending the bills to Contractor, Contractor shall pay such bills within thirty (30) days of Contractor's receipt of billing. If Railroad performs any flagging, or other special protective or safety measures are performed by Railroad, Contractor agrees that Contractor is not relieved of any of its responsibilities or liabilities set forth in this Agreement.

B. The rate of pay per hour for each flagman will be the prevailing hourly rate in effect for an eight-hour day for the class of flagmen used during regularly assigned hours and overtime in accordance with Labor Agreements and Schedules in effect at the time the work is performed. In addition to the cost of such labor, a composite charge for vacation, holiday, health and welfare, supplemental sickness, Railroad Retirement and unemployment compensation, supplemental pension, Employees Liability and Property Damage and Administration will be included, computed on actual payroll. The composite charge will be the prevailing composite charge in effect at the time the work is performed. One and one-half times the current hourly rate is paid for overtime, Saturdays and Sundays, and two and one-half times current hourly rate for holidays. Wage rates are subject to change, at any time, by law or by agreement between Railroad and its employees, and may be retroactive as a result of negotiations or a ruling of an authorized governmental agency. Additional charges on labor are also subject to change. If the wage rate or additional charges are changed, Contractor (or the governmental entity, as applicable) shall pay on the basis of the new rates and charges.

C. Reimbursement to Railroad will be required covering the full eight-hour day during which any flagman is furnished, unless the flagman can be assigned to other Railroad work during a portion of such day, in which event reimbursement will not be required for the portion of the day during which the flagman is engaged in other Railroad work. Reimbursement will also be required for any day not actually worked by the flagman following the flagman's assignment to work on the project for which Railroad is required to pay the flagman and which could not reasonably be avoided by Railroad by assignment of such flagman to other work, even though Contractor may not be working during such time. When it becomes necessary for Railroad to bulletin and assign an employee to a flagging position in compliance with union collective bargaining agreements, Contractor must provide Railroad a minimum of five (5) days notice prior to the cessation of the need for a flagman. If five (5) days notice of cessation is not given, Contractor will still be required to pay flagging charges for the five (5) day notice period required by union agreement to be given to the employee, even though flagging is not required for that period. An additional thirty (30) days notice must then be given to Railroad if flagging services are needed again after such five day cessation notice has been given to Railroad.

CONFORMED

Section 2. LIMITATION AND SUBORDINATION OF RIGHTS GRANTED

A. The foregoing grant of right is subject and subordinate to the prior and continuing right and obligation of the Railroad to use and maintain its entire property including the right and power of Railroad to construct, maintain, repair, renew, use, operate, change, modify or relocate railroad tracks, roadways, signal, communication, fiber optics, or other wirelines, pipelines and other facilities upon, along or across any or all parts of its property, all or any of which may be freely done at any time or times by Railroad without liability to Contractor or to any other party for compensation or damages.

B. The foregoing grant is also subject to all outstanding superior rights (whether recorded or unrecorded and including those in favor of licensees and lessees of Railroad's property, and others) and the right of Railroad to renew and extend the same, and is made without covenant of title or for quiet enjoyment.

Section 3. NO INTERFERENCE WITH OPERATIONS OF RAILROAD AND ITS TENANTS.

A. Contractor shall conduct its operations so as not to interfere with the continuous and uninterrupted use and operation of the railroad tracks and property of Railroad, including without limitation, the operations of Railroad's lessees, licensees or others, unless specifically authorized in advance by the Railroad Representative. Nothing shall be done or permitted to be done by Contractor at any time that would in any manner impair the safety of such operations. Railroad shall be reimbursed by Contractor for train delay costs and lost revenue claims due to any delays or interruption of train operations resulting from Contractor's work or other activities. When not in use, Contractor's machinery and materials shall be kept at least fifty (50) feet from the centerline of Railroad's nearest track, and there shall be no vehicular crossings of Railroads tracks except at existing open public crossings.

B. Operations of Railroad and work performed by Railroad personnel and delays in the work to be performed by Contractor caused by such railroad operations and work are expected by Contractor, and Contractor agrees that Railroad shall have no liability to Contractor, or any other person or entity for any such delays. The Contractor shall coordinate its activities with those of Railroad and third parties so as to avoid interference with railroad operations. The safe operation of Railroad train movements and other activities by Railroad takes precedence over any work to be performed by Contractor.

Section 4. LIENS.

Contractor shall pay in full all persons who perform labor or provide materials for the work to be performed by Contractor. Contractor shall not create, permit or suffer any mechanic's or materialmen's liens of any kind or nature to be created or enforced against any property of Railroad for any such work performed. Contractor shall indemnify and hold harmless Railroad from and against any and all liens, claims, demands, costs or expenses of whatsoever nature in any way connected with or growing out of such work done, labor performed, or materials furnished. If Contractor fails to promptly cause any lien to be released of record, Railroad may, at its election, discharge the lien or claim of lien at Contractor's expense.

Section 5. PROTECTION OF FIBER OPTIC CABLE SYSTEMS.

A. Fiber optic cable systems may be buried on Railroad's property. Protection of the fiber optic cable systems is of extreme importance since any break could disrupt service to users resulting in business interruption and loss of revenue and profits. Contractor shall telephone Railroad during normal business hours (7:00 a.m. to 9:00 p.m. Central Time, Monday through Friday, except holidays) at 1-800-336-9193 (also a 24-hour, 7-day number for emergency calls) to determine if fiber optic cable is buried anywhere on Railroad's property to be used by Contractor. If it is, Contractor will telephone the telecommunications company(ies) involved, make arrangements for a cable locator and, if applicable, for relocation or other protection of the fiber optic cable. Contractor shall not commence any work until all such protection or relocation (if applicable) has been accomplished.

CONFORMED

b. In addition to other indemnity provisions in this Agreement, Contractor shall indemnify, defend and hold Railroad harmless from and against all costs, liability and expense whatsoever (including, without limitation, attorneys' fees, court costs and expenses) arising out of any act or omission of Contractor, its agents and/or employees, that causes or contributes to (1) any damage to or destruction of any telecommunications system on Railroad's property, and/or (2) any injury to or death of any person employed by or on behalf of any telecommunications company, and/or its contractor, agents and/or employees, on Railroad's property. Contractor shall not have or seek recourse against Railroad for any claim or cause of action for alleged loss of profits or revenue or loss of service or other consequential damage to a telecommunication company using Railroad's property or a customer or user of services of the fiber optic cable on Railroad's property.

Section 6. PERMITS - COMPLIANCE WITH LAWS.

In the prosecution of the work covered by this Agreement, Contractor shall secure any and all necessary permits and shall comply with all applicable federal, state and local laws, regulations and enactments affecting the work including, without limitation, all applicable Federal Railroad Administration regulations.

Section 7. SAFETY.

A. Safety of personnel, property, rail operations and the public is of paramount importance in the prosecution of the work performed by Contractor. Contractor shall be responsible for initiating, maintaining and supervising all safety, operations and programs in connection with the work. Contractor shall at a minimum comply with Railroad's safety standards listed in **Exhibit D**, hereto attached, to ensure uniformity with the safety standards followed by Railroad's own forces. As a part of Contractor's safety responsibilities, Contractor shall notify Railroad if Contractor determines that any of Railroad's safety standards are contrary to good safety practices. Contractor shall furnish copies of **Exhibit D** to each of its employees before they enter the job site.

B. Without limitation of the provisions of paragraph A above, Contractor shall keep the job site free from safety and health hazards and ensure that its employees are competent and adequately trained in all safety and health aspects of the job.

C. Contractor shall have proper first aid supplies available on the job site so that prompt first aid services may be provided to any person injured on the job site. Contractor shall promptly notify Railroad of any U.S. Occupational Safety and Health Administration reportable injuries. Contractor shall have a nondelegable duty to control its employees while they are on the job site or any other property of Railroad, and to be certain they do not use, be under the influence of, or have in their possession any alcoholic beverage, drug or other substance that may inhibit the safe performance of any work.

D. If and when requested by Railroad, Contractor shall deliver to Railroad a copy of Contractor's safety plan for conducting the work (the "Safety Plan"). Railroad shall have the right, but not the obligation, to require Contractor to correct any deficiencies in the Safety Plan. The terms of this Agreement shall control if there are any inconsistencies between this Agreement and the Safety Plan.

Section 8. INDEMNITY.

A. To the extent not prohibited by applicable statute, Contractor shall indemnify, defend and hold harmless Railroad, its affiliates, and its and their officers, agents and employees (individually an "Indemnified Party" or collectively "Indemnified Parties") from and against any and all loss, damage, injury, liability, claim, demand, cost or expense (including, without limitation, attorney's, consultant's and expert's fees, and court costs), fine or penalty (collectively, "Loss") incurred by any person (including, without limitation, any Indemnified Party, Contractor, or any employee of Contractor or of any Indemnified Party) arising out of or in any manner connected with (i) any work performed by Contractor, or (ii) any act or omission of Contractor, its officers, agents or employees, or (iii) any breach of this Agreement by Contractor.

CONFORMED

b. The right to indemnity under this Section 8 shall accrue upon occurrence of the event giving rise to the Loss, and shall apply regardless of any negligence or strict liability of any Indemnified Party, except where the Loss is caused by the sole active negligence of an Indemnified Party as established by the final judgment of a court of competent jurisdiction. The sole active negligence of any Indemnified Party shall not bar the recovery of any other Indemnified Party.

c. Contractor expressly and specifically assumes potential liability under this Section 8 for claims or actions brought by Contractor's own employees. Contractor waives any immunity it may have under worker's compensation or industrial insurance acts to indemnify the Indemnified Parties under this Section 8. Contractor acknowledges that this waiver was mutually negotiated by the parties hereto.

d. No court or jury findings in any employee's suit pursuant to any worker's compensation act or the Federal Employers' Liability Act against a party to this Agreement may be relied upon or used by Contractor in any attempt to assert liability against any Indemnified Party.

e. The provisions of this Section 8 shall survive the completion of any work performed by Contractor or the termination or expiration of this Agreement. In no event shall this Section 8 or any other provision of this Agreement be deemed to limit any liability Contractor may have to any Indemnified Party by statute or under common law.

Section 9. RESTORATION OF PROPERTY.

In the event Railroad authorizes Contractor to take down any fence of Railroad or in any manner move or disturb any of the other property of Railroad in connection with the work to be performed by Contractor, then in that event Contractor shall, as soon as possible and at Contractor's sole expense, restore such fence and other property to the same condition as the same were in before such fence was taken down or such other property was moved or disturbed. Contractor shall remove all of Contractor's tools, equipment, rubbish and other materials from Railroad's property promptly upon completion of the work, restoring Railroad's property to the same state and condition as when Contractor entered thereon.

Section 10. WAIVER OF DEFAULT.

Waiver by Railroad of any breach or default of any condition, covenant or agreement herein contained to be kept, observed and performed by Contractor shall in no way impair the right of Railroad to avail itself of any remedy for any subsequent breach or default.

Section 11. MODIFICATION - ENTIRE AGREEMENT.

No modification of this Agreement shall be effective unless made in writing and signed by Contractor and Railroad. This Agreement and the exhibits attached hereto and made a part hereof constitute the entire understanding between Contractor and Railroad and cancel and supersede any prior negotiations, understandings or agreements, whether written or oral, with respect to the work to be performed by Contractor.

Section 12. ASSIGNMENT - SUBCONTRACTING.

Contractor shall not assign or subcontract this Agreement, or any interest therein, without the written consent of the Railroad. Contractor shall be responsible for the acts and omissions of all subcontractors. Before Contractor commences any work, the Contractor shall, except to the extent prohibited by law; (1) require each of its subcontractors to include the Contractor as "Additional Insured" in the subcontractor's Commercial General Liability policy and Business Automobile policies with respect to all liabilities arising out of the subcontractor's performance of work on behalf of the Contractor by endorsing these policies with ISO Additional Insured Endorsements CG 20 26, and CA 20 48 (or substitute forms providing equivalent coverage; (2) require each of its subcontractors to endorse their Commercial General Liability Policy with "Contractual Liability Railroads" ISO Form CG 24 17 10 01 (or a

CONFORMED

substitute form providing equivalent coverage) for the job site; and (3) require each of its subcontractors to endorse their Business Automobile Policy with "Coverage For Certain Operations In Connection With Railroads" ISO Form CA 20 70 10 01 (or a substitute form providing equivalent coverage) for the job site.

CONFORMED

EXHIBIT C
TO
CONTRACTOR'S
RIGHT OF ENTRY AGREEMENT

Union Pacific Railroad Company
Insurance Provisions For
Contractor's Right of Entry Agreement

Section 1. REQUIRED INSURANCE.

Contractor shall, at its sole cost and expense, procure and maintain in effect during the entire term of this Agreement the following insurance coverage.

A. **Commercial General Liability** insurance. Commercial general liability (CGL) with a limit of not less than $5,000,000 each occurrence and an aggregate limit of not less than $10,000,000. CGL insurance must be written on ISO occurrence form CG 00 01 12 04 (or a substitute form providing equivalent coverage).

The policy must also contain the following endorsement, which must be stated on the certificate of insurance:

- Contractual Liability Railroads ISO form CG 24 17 10 01 (or a substitute form providing equivalent coverage) showing "Union Pacific Railroad Company Property" as the Designated Job Site.

B. **Business Automobile Coverage** insurance. Business auto coverage written on ISO form CA 00 01 (or a substitute form providing equivalent liability coverage) with a combined single limit of not less $2,000,000 for each accident.

The policy must contain the following endorsements, which must be stated on the certificate of insurance:

- Coverage For Certain Operations In Connection With Railroads ISO form CA 20 70 10 01 (or a substitute form providing equivalent coverage) showing "Union Pacific Property" as the Designated Job Site.
- Motor Carrier Act Endorsement - Hazardous materials clean up (MCS-90) if required by law.

C. **Workers' Compensation and Employers' Liability** insurance. Coverage must include but not be limited to:

- Contractor's statutory liability under the workers' compensation laws of the state where the Premises is located.
- Employers' Liability (Part B) with limits of at least $500,000 each accident, $500,000 disease policy limit $500,000 each employee.

If Contractor is self-insured, evidence of state approval and excess workers compensation coverage must be provided. Coverage must include liability arising out of the U.S. Longshoremen's and Harbor Workers' Act, the Jones Act, and the Outer Continental Shelf Land Act, if applicable.

D. **Railroad Protective Liability** insurance. Railroad Protective Liability insurance written on ISO occurrence form CG 00 35 12 04 (or a substitute form providing equivalent coverage) on behalf of Railroad as named insured, with a limit of not less than $2,000,000 per occurrence and an aggregate of $6,000,000. A binder stating the policy is in place must be submitted to Railroad before the work may be commenced and until the original policy is forwarded to Railroad.

CONFORMED

E. **Umbrella or Excess** insurance. If Contractor utilizes umbrella or excess policies, these policies must "follow form" and afford no less coverage than the primary policy.

Section 2. OTHER INSURANCE REQUIREMENTS.

A. All policy(ies) required above (except business automobile, workers' compensation and employers' liability) must include Railroad as "Additional Insured" using ISO Additional Insured Endorsement CG 20 26 (or substitute form(s) providing equivalent coverage). The coverage provided to Railroad as additional insured shall not be limited by Contractor's liability under the indemnity provisions of this Agreement. BOTH CONTRACTOR AND RAILROAD EXPECT THAT UNION PACIFIC RAILROAD COMPANY WILL BE PROVIDED WITH THE BROADEST POSSIBLE COVERAGE AVAILABLE BY OPERATION OF LAW UNDER ISO ADDITIONAL INSURED FORM CG 20 26.

B. [Intentionally omitted.]

C. Contractor waives all rights against Railroad and its agents, officers, directors and employees, where permitted by law, for recovery of damages to the extent these damages are covered by the workers compensation and employers liability or commercial umbrella/excess liability insurance obtained by Contractor required by this Agreement, which must be stated on the certificate of insurance.

D. Prior to commencing any work, Contractor shall furnish Railroad with a certificate(s) of insurance, executed by a duly authorized representative of each insurer, showing compliance with the insurance requirements in this Agreement.

E. All insurance policies must be written by a reputable insurance company acceptable to Railroad or with a current Best's Insurance Guide Rating of A- and Class VII or better, and authorized to do business in the state in which the Premises is located.

F. The fact that insurance is obtained by Contractor, or by Railroad on behalf of Contractor, will not be deemed to release or diminish the liability of Contractor, including, without limitation, liability under the indemnity provisions of this Agreement. Damages recoverable by Railroad from Contractor or any third party will not be limited by the amount of the required insurance coverage.

CONFORMED

EXHIBIT D
TO
CONTRACTOR'S RIGHT OF ENTRY AGREEMENT

MINIMUM SAFETY REQUIREMENTS

The term "employees" as used herein refer to all employees of Contractor as well as all employees of any subcontractor or agent of Contractor.

I. Clothing

A. All employees of Contractor will be suitably dressed to perform their duties safely and in a manner that will not interfere with their vision, hearing, or free use of their hands or feet.

Specifically, Contractor's employees must wear:

(i) Waist-length shirts with sleeves.
(ii) Trousers that cover the entire leg. If flare-legged trousers are worn, the trouser bottoms must be tied to prevent catching.
(iii) Footwear that covers their ankles and has a defined heel. Employees working on bridges are required to wear safety-toed footwear that conforms to the American National Standards Institute (ANSI) and FRA footwear requirements.

B. Employees shall not wear boots (other than work boots), sandals, canvas-type shoes, or other shoes that have thin soles or heels that are higher than normal.

C. Employees must not wear loose or ragged clothing, neckties, finger rings, or other loose jewelry while operating or working on machinery.

II. Personal Protective Equipment

Contractor shall require its employees to wear personal protective equipment as specified by Railroad rules, regulations, or recommended or requested by the Railroad Representative.

(i) Hard hat that meets the American National Standard (ANSI) Z89.1 – latest revision. Hard hats should be affixed with Contractor's company logo or name.
(ii) Eye protection that meets American National Standard (ANSI) for occupational and educational eye and face protection, Z87.1 – latest revision. Additional eye protection must be provided to meet specific job situations such as welding, grinding, etc.
(iii) Hearing protection, which affords enough attenuation to give protection from noise levels that will be occurring on the job site. Hearing protection, in the form of plugs or muffs, must be worn when employees are within:

- 100 feet of a locomotive or roadway/work equipment
- 15 feet of power operated tools
- 150 feet of jet blowers or pile drivers
- 150 feet of retarders in use (when within 10 feet, employees must wear dual ear protection – plugs and muffs)
-

(iv) Other types of personal protective equipment, such as respirators, fall protection equipment, and face shields, must be worn as recommended or requested by the Railroad Representative.

CONFORMED

III. On Track Safety

Contractor is responsible for compliance with the Federal Railroad Administration's Roadway Worker Protection regulations – 49CFR214, Subpart C and Railroad's On-Track Safety rules. Under 49CFR214, Subpart C, railroad contractors are responsible for the training of their employees on such regulations. In addition to the instructions contained in Roadway Worker Protection regulations, all employees must:

(i) Maintain a distance of twenty-five (25) feet to any track unless the Railroad Representative is present to authorize movements.
(ii) Wear an orange, reflectorized workwear approved by the Railroad Representative.
(iii) Participate in a job briefing that will specify the type of On-Track Safety for the type of work being performed. Contractor must take special note of limits of track authority, which tracks may or may not be fouled, and clearing the track. Contractor will also receive special instructions relating to the work zone around machines and minimum distances between machines while working or traveling.

IV. Equipment

A. It is the responsibility of Contractor to ensure that all equipment is in a safe condition to operate. If, in the opinion of the Railroad Representative, any of Contractor's equipment is unsafe for use, Contractor shall remove such equipment from Railroad's property. In addition, Contractor must ensure that the operators of all equipment are properly trained and competent in the safe operation of the equipment. In addition, operators must be:

- Familiar and comply with Railroad's rules on lockout/tagout of equipment.
- Trained in and comply with the applicable operating rules if operating any hy-rail equipment on-track.
- Trained in and comply with the applicable air brake rules if operating any equipment that moves rail cars or any other railbound equipment.

B. All self-propelled equipment must be equipped with a first-aid kit, fire extinguisher, and audible back-up warning device.

C. Unless otherwise authorized by the Railroad Representative, all equipment must be parked a minimum of twenty-five (25) feet from any track. Before leaving any equipment unattended, the operator must stop the engine and properly secure the equipment against movement.

D. Cranes must be equipped with three orange cones that will be used to mark the working area of the crane and the minimum clearances to overhead powerlines.

V. General Safety Requirements

A. Contractor shall ensure that all waste is properly disposed of in accordance with applicable federal and state regulations.

B. Contractor shall ensure that all employees participate in and comply with a job briefing conducted by the Railroad Representative, if applicable. During this briefing, the Railroad Representative will specify safe work procedures, (including On-Track Safety) and the potential hazards of the job. If any employee has any questions or concerns about the work, the employee must voice them during the job briefing. Additional job briefings will be conducted during the work as conditions, work procedures, or personnel change.

C. All track work performed by Contractor meets the minimum safety requirements established by the Federal Railroad Administration's Track Safety Standards 49CFR213.

CONFORMED

D. All employees comply with the following safety procedures when working around any railroad track:

(i) Always be on the alert for moving equipment. Employees must always expect movement on any track, at any time, in either direction.
(ii) Do not step or walk on the top of the rail, frog, switches, guard rails, or other track components.
(iii) In passing around the ends of standing cars, engines, roadway machines or work equipment, leave at least 20 feet between yourself and the end of the equipment. Do not go between pieces of equipment of the opening is less than one car length (50 feet).
(iv) Avoid walking or standing on a track unless so authorized by the employee in charge.
(v) Before stepping over or crossing tracks, look in both directions first.
(vi) Do not sit on, lie under, or cross between cars except as required in the performance of your duties and only when track and equipment have been protected against movement.

E. All employees must comply with all federal and state regulations concerning workplace safety.

CONFORMED

EXHIBIT D

TO CHANNEL IMPROVEMENT CONSTRUCTION & MAINTENANCE AGREEMENT

Section 1. SELF INSURANCE.

The District may self-insure all or a portion of the insurance coverage required by Section 2 of Exhibit D below, subject to Railroad's review and written approval of the District's Declaration of Self-Insurance (in the form of a letter from the District's Finance Department) certifying to Railroad that such risks are adequately covered by the financial resources of the District. The Railroad Protective Liability insurance required by Paragraph D of Section 2 below may not be self-insured.

Section 2. REQUIRED INSURANCE.

The District shall, at its sole cost and expense, (except for Railroad Protective Liability Insurance required in Paragraph D), procure and maintain in effect during the entire term of this Agreement the following insurance coverage. The District shall procure and maintain, or cause to be procured and maintained by its Contractor, at its sole cost and expense, Railroad Protective Liability Insurance coverage described in Paragraph D during any period of construction, maintenance, repair or reconstruction work.

A. Commercial General Liability insurance. Commercial general liability (CGL) with a limit of not less than $5,000,000 each occurrence and an aggregate limit of not less than $10,000,000. CGL insurance must be written on ISO occurrence form CG 00 01 12 04 (or a substitute form providing equivalent coverage).

The policy must also contain the following endorsement, which must be stated on the certificate of insurance:

- Contractual Liability Railroads ISO form CG 24 17 10 01 (or a substitute form providing equivalent coverage) showing "Union Pacific Railroad Company Property" as the Designated Job Site.

B. Business Automobile Coverage insurance. Business auto coverage written on ISO form CA 00 01 (or a substitute form providing equivalent liability coverage) with a combined single limit of not less $2,000,000 for each accident.

The policy must contain the following endorsements, which must be stated on the certificate of insurance:

- Coverage For Certain Operations In Connection With Railroads ISO form CA 20 70 10 01 (or a substitute form providing equivalent coverage) showing "Union Pacific Property" as the Designated Job Site.

CONFORMED

- Motor Carrier Act Endorsement - Hazardous materials clean up (MCS-90) if required by law.

C. **Workers Compensation and Employers Liability** insurance. Coverage must include but not be limited to:

- The District's and/or the District's contractor's statutory liability under the workers' compensation laws of the state where the job site is located.

- Employers' Liability (Part B) with limits of at least $500,000 each accident, $500,000 disease policy limit $500,000 each employee.

If the District, and/or the District's contractor, is self-insured, evidence of state approval and excess workers compensation coverage must be provided. Coverage must include liability arising out of the U.S. Longshoremen's and Harbor Workers' Act, the Jones Act, and the Outer Continental Shelf Land Act, if applicable.

D. **Railroad Protective Liability** insurance. Railroad Protective Liability insurance written on ISO occurrence form CG 00 35 12 04 (or a substitute form providing equivalent coverage) on behalf of Railroad as named insured, with a limit of not less than $2,000,000 per occurrence and an aggregate of $6,000,000. A binder stating the policy is in place must be submitted to Railroad before the work may be commenced and until the original policy is forwarded to Railroad.

E. **Umbrella or Excess** insurance. If the District, and/or the District's contractor, utilizes umbrella or excess policies, these policies must "follow form" and afford no less coverage than the primary policy.

Section 3. **OTHER INSURANCE REQUIREMENTS.**

A. All policy(ies) required above (except business automobile, worker's compensation and employers liability) must include Railroad as "Additional Insured" using ISO Additional Insured Endorsements CG 20 26 (or substitute form(s) providing equivalent coverage). The coverage provided to Railroad as additional insured shall not be limited by the District's liability under the indemnity provisions of this Agreement. BOTH THE DISTRICT AND RAILROAD EXPECT THAT UNION PACIFIC RAILROAD COMPANY WILL BE PROVIDED WITH THE BROADEST POSSIBLE COVERAGE AVAILABLE BY OPERATION OF LAW UNDER ISO ADDITIONAL INSURED FORM CG 20 26.

B. Punitive damages exclusion, if any, must be deleted (and the deletion indicated on the certificate of insurance), unless the law governing this Agreement prohibits all punitive damages that might arise under this Agreement.

C. The District waives all rights against Railroad and its agents, officers, directors and employees, where permitted by law, for recovery of damages to the extent that these damages are covered by the workers compensation and employers liability or commercial umbrella/excess liability insurance obtained by the District required by this Agreement, which must be stated on

CONFORMED

the certificate of insurance.

D. Prior to commencing any work, the District, and/or the District's Contractor, shall furnish Railroad with a certificate(s) of insurance, executed by a duly authorized representative of each insurer, showing compliance with the insurance requirements in this Agreement.

E. All insurance policies must be written by a reputable insurance company acceptable to Railroad or with a current Best's Insurance Guide Rating of A- and Class VII or better, and authorized to do business in the state where the job site is located.

F. The fact that insurance is obtained by the District, and/or Contractor, or by Railroad on behalf of the District, and/or Contractor, will not be deemed to release or diminish the liability of the District and Contractor, including, without limitation, liability under the indemnity provisions of this Agreement. Damages recoverable by Railroad from the District, Contractor or any third party will not be limited by the amount of the required insurance coverage.

CONFORMED

EXHIBIT E

TO CHANNEL IMPROVEMENT CONSTRUCTION & MAINTENANCE AGREEMENT

SPECIAL SAFETY REQUIREMENTS.

Safety of personnel, property, rail operations and the public is of paramount importance in the performance of the Project Work and subsequent work performed on and use of the Easement Property or Temporary License Area. As reinforcement and in furtherance of overall safety measures to be observed by the District (and not by way of limitation), the following special safety rules shall be followed:

a. The District's work force must be (and the District shall require any Contractor's work force to be) trained in accordance with all regulatory and Railroad safety requirements prior to performing any work at the job site or any other property of Standard or Railroad. Such training requirements may include eRailsafe Lite certification.

b. The District shall keep the job site free from safety and health hazards and ensure that its employees are competent and adequately trained in all safety and health aspects of the job. The District shall have proper first aid supplies available on the job site so that prompt first aid services can be provided to any person that may be injured on the job site. The District shall promptly notify Railroad of any U.S. Occupational Safety and Health Administration reportable injuries occurring to any person that may arise during activities or work performed on the job site. The District shall have a non-delegable duty to control its work force, while they are on the job site or any other property of Standard or Railroad to be certain they do not use, be under the influence of, or have in their possession any alcoholic beverage or illegally obtained drug, narcotic or other substance that may inhibit the safe performance of an activity or work.

c. The District's work force shall be suitably dressed to perform their duties safely and in a manner that will not interfere with their vision, hearing or free use of their hands or feet. Only waist length shirts with sleeves and trousers that cover the entire leg are to be worn. If flare-legged trousers are worn, the trouser bottoms must be tied to prevent catching. The work force should wear sturdy and protective footwear. The work force shall not wear boots (other than work boots), sandals, canvas-type shoes or other shoes that have thin soles or heels that are higher than normal. In addition, the District shall require its work force to wear personal protective equipment as specified by Railroad rules, regulations or Railroad officials overlooking the work at the job site. In particular, the protective equipment to be warn shall be:

(1) Protective head gear that meets American National Standard-Z89.1-latest revision. It is suggested that all hardhats be affixed with District's or Contractor's logo or name;

(2) Eye protection that meets American National Standard for occupational and educational eye and face protection, Z87.1-latest revision. Additional eye protection

CONFORMED

must be provided to meet specific job situations such as welding, grinding, burning, etc.; and

(3) Hearing protection which affords enough attenuation to give protection from noise levels that will be occurring on the job site.

d. All heavy equipment provided or leased by the District shall be equipped with audible back-up warning devices. If in the opinion of the Railroad Representative, any of District's or Contractor's equipment is unsafe for use on Standard's property and/or Railroad's property, the District, at the request of the Railroad Representative, shall immediately remove such equipment from Standard's property and/or Railroad's property, as applicable.

e. This Section shall not apply for any day to day use by the District for ingress and egress of those roadways located on the Easement Property that are separated from Railroad's trackage by a fence or that portion of the roadway adjacent thereto where the parties have permitted no fence to be installed due to clearance issues. For the avoidance of doubt, day to day use of the roadway for ingress or egress shall not include any work being performed on or about the roadway.

CONFORMED

EXHIBIT F

TO CHANNEL IMPROVEMENT CONSTRUCTION & MAINTENANCE AGREEMENT

Form of Easement Deed

(see attached)

CONFORMED

RECORD WITHOUT FEE UNDER SECTION 6103
GOVERNMENT CODE OF THE STATE OF CALIFORNIA

After Recording, Return To:

Real Estate Services Unit
Santa Clara Valley Water District
5750 Almaden Expressway
San Jose, California 95118

_____

(Space Above Reserved for County Recorder's Use)

Portion of APN: _____

Document No.: **[Insert Applicable District File Nos.]**

[Text applicable to the Easement Deed for property rights to be granted at Calaveras Blvd., Los Coches St., Yosemite Dr. and Montague Expwy. by Standard Realty and Development Company is preceded by "a:"]

[Text applicable to the Easement Deed for all other property rights to be granted by Standard Realty and Development Company is preceded by "b:"]

[Text applicable to the Easement Deed for property rights to be granted Union Pacific Railroad Company is preceded by "c:"]

CHANNEL IMPROVEMENT EASEMENT DEED

THIS CHANNEL IMPROVEMENT EASEMENT DEED (this "**Easement Deed**") is made this __ day of May, 2016 (the "**Effective Date**"), between **[a and b:** STANDARD REALTY AND DEVELOPMENT COMPANY, a California corporation **/c:** UNION PACIFIC RAILROAD COMPANY, a Delaware corporation**]** ("**Grantor**"), and SANTA CLARA VALLEY WATER DISTRICT, a special district created by the California legislature ("**Grantee**"), whose address is 5750 Almaden Expressway, San Jose, California 95118.

Grantor and Grantee have entered into that certain Channel Improvement Construction and Maintenance Agreement dated as of the Effective Date (the "**C&M Agreement**"), the terms and conditions of which are incorporated into this Easement Deed by reference, in connection with Grantee's Berryessa Creek Flood Risk Management Project and Grantee's use of the Premises (as such term is defined below). The provisions of this Easement Deed are in addition to, and not in limitation of, the C&M Agreement (including all subsequent supplements and modifications of the C&M Agreement).

CONFORMED

Grantor, for good and valuable consideration the receipt and sufficiency of which are hereby acknowledged, grants to Grantee, its successors and permitted assigns, non-exclusive, perpetual and assignable rights and easements (collectively, the "**Easements**") in Milpitas, Santa Clara County, California on, over and across the real property as described on the print marked **Exhibit A**, attached hereto and hereby made a part of this Easement Deed (the "**Premises**") for the limited purposes of: (i) constructing, inspecting, maintaining, repairing, renewing, using and operating channel improvement works, (ii) **[a:** Intentionally Omitted, **/b and c:** constructing, maintaining and using an access road in accordance with the Plans (as such term is defined in the C&M Agreement),**]** (iii) clearing, cutting, felling, removing and disposing of timber, trees, underbrush, buildings and/or other improvements from the Premises that impede or obstruct the flow of flood waters, and (iv) excavating, dredging, cutting away and removing land and placing dredge or spoil material on the Premises in accordance with the Plans; in each case reserving, however, to Grantor and its successors and assigns, all such rights and privileges in the Premises as may be used without interfering with or abridging the Easements acquired pursuant hereto. Notwithstanding the foregoing, Grantee agrees that it shall not remove any of Grantor's railroad facilities existing as of the Effective Date from the Premises (unless otherwise permitted by the Plans), and shall not remove any of Grantor's railroad facilities contemplated by the Plans or that may be constructed in the future by Grantor unless such future railroad facilities interfere with or abridge the Easements acquired hereunder. For the avoidance of doubt and without limiting any provisions contained in the C&M Agreement and this Easement Deed, Grantee shall obtain prior approval from Grantor, which approval shall not be unreasonably withheld, before commencing any work or the performance of any activity or work in which any person or equipment will be within twenty-five (25) feet of any track, as required in Exhibit B, Section 5 of the C&M Agreement.

The Easements are granted for the purposes described above only, and are subject to the terms and conditions of the C&M Agreement and this Easement Deed. Without limiting the foregoing, this grant does not include the right to install utilities of any nature, including without limitation, fiber optic, cable television, electrical, gas or liquid distribution, or telephone lines.

Grantor, its successors and assigns, reserves the right to use and maintain its entire property to construct, add, maintain, repair, renew, use, operate, change, modify or relocate railroad tracks, signal, communication, fiber optics and other railroad facilities upon, under, over, along or across any or all parts of its property, all or any of which may be freely done by Grantor; provided, however, that any use of the Premises shall not interfere with or abridge the rights and easements acquired by Grantee hereunder.

This Easement Deed is also subject to all outstanding superior rights (including without limitation those in favor of easement holders, licensees and lessees of Grantor's property, and others) and the right of the Grantor to renew and extend the same, and is made without covenant of title or for quiet enjoyment. It shall be Grantee's sole obligation to obtain such additional permission, licenses and grants necessary on account of any such existing rights. Notwithstanding the foregoing, Grantor understands and agrees that it shall not grant a future right in the Premises that expressly interferes with or abridges the Easements.

The Easements are also limited to such rights as Grantor may have in the Premises and is granted to and accepted by the Grantee in an **"AS IS," "WHERE IS"** and **"WITH ALL FAULTS"**

CONFORMED

basis and condition without warranty, express or implied. No damages shall be recoverable from Grantor because of any dispossession of Grantee or because of failure of, or defect in, Grantor's title.

The terms and conditions of this Easement Deed inure to and will bind Grantor's and Grantee's successors and assigns.

The Easements shall take effect upon the Effective Date and shall continue in full force and effect for as long as the channel improvements remain on the Premises, unless sooner terminated as provided in the C&M Agreement.

Within ninety (90) days after termination howsoever of the Easements or this Easement Deed, Grantee, at its sole expense, shall (i) peacefully and quietly vacate and surrender possession of the Premises, and (ii) deliver to Grantor a fully executed and acknowledged release and quitclaim of the Premises in recordable form satisfactory to Grantor.

CONFORMED

IN WITNESS WHEREOF, Grantor and Grantee have caused this Easement Deed to be executed as of the Effective Date.

Attest:

_____
Secretary

(Seal)

[a and b: STANDARD REALTY AND DEVELOPMENT COMPANY, a California corporation

By: _____
Tony K. Love, Chairman and CEO**]**

Attest:

_____
Secretary

(Seal)

[c: UNION PACIFIC RAILROAD COMPANY, a Delaware corporation

By: _____
Renay J. Robison, Director – Real Estate**]**

Attest: Michelle L. King, CMC

_____
Clerk/Board of Directors

SANTA CLARA VALLEY WATER DISTRICT, a special district created by the California legislature

By: _____
Printed Name: _____
Title: _____

CONFORMED

ACKNOWLEDGMENT

STATE OF NEBRASKA)
) ss.
COUNTY OF DOUGLAS)

On _____, 2016, before me, _____, Notary Public in and for said County and State, personally appeared _____ and _____, who are _____ and _____, respectively, of **[a and b:** Standard Realty and Development Company, a California corporation, **/c:** Union Pacific Railroad Company, a Delaware corporation,**]** and who are personally known to me (or proved to me on the basis of satisfactory evidence) to be the persons whose names are subscribed to in the within instrument, and acknowledged to me that they executed the same in their authorized capacities, and that by their signatures on the instrument the persons, or the entity upon behalf of which the persons acted, executed the instrument.

WITNESS my hand and official seal.

_____
Notary Public

(Seal)

CONFORMED

ACKNOWLEDGMENT

A NOTARY PUBLIC OR OTHER OFFICER COMPLETING THIS CERTIFICATE VERIFIES ONLY THE IDENTITY OF THE INDIVIDUAL WHO SIGNED THE DOCUMENT TO WHICH THIS CERTIFICATE IS ATTACHED, AND NOT THE TRUTHFULNESS, ACCURACY, OR VALIDITY OF THAT DOCUMENT.

STATE OF CALIFORNIA }
}
COUNTY OF _____ }

On _____, 201__, before me, _____, personally appeared _____, who proved to me on the basis of satisfactory evidence to be the person(s) whose name is subscribed to the within instrument and acknowledged to me that he executed the same in his authorized capacity, and that by his signature on the instrument the person, or the entity upon behalf of which the person acted, executed the instrument.

I certify under PENALTY OF PERJURY under the laws of the State of California that the foregoing paragraph is true and correct.

WITNESS my hand and official seal.

_____ (Notary Seal)
Signature of Notary Public

CONFORMED

EXHIBIT A
TO
EASEMENT DEED

Legal Description and Depiction of the Premises

(see attached)

CONFORMED

EXHIBIT G

TO CHANNEL IMPROVEMENT CONSTRUCTION & MAINTENANCE AGREEMENT

Form of Amended and Restated Easement Deed

(see attached)

CONFORMED

RECORD WITHOUT FEE UNDER SECTION 6103
GOVERNMENT CODE OF THE STATE OF CALIFORNIA

After Recording, Return To:

Real Estate Services Unit
Santa Clara Valley Water District
5750 Almaden Expressway
San Jose, California 95118

_____

(Space Above Reserved for County Recorder's Use)

Portion of APN: _____

Document No.: **[Insert Applicable District File Nos.]**

[Text applicable to the deed identified as 4017-09 to be amended and restated by Union Pacific Railroad Company is preceded by "a:"] Document No. 4017-99

[Text applicable to the deed identified as 4017-12 to be amended and restated by Union Pacific Railroad Company is preceded by "b:"] Document No. 4017-100

[Text applicable to the deed identified as 4017-49 to be amended and restated by Standard Realty and Development Company is preceded by "c:"] Document No. 4017-101

[Text applicable to the deed identified as 4017-51 to be amended and restated by Standard Realty and Development Company is preceded by "d:"] Document No. 4017-102

AMENDED AND RESTATED CHANNEL IMPROVEMENT EASEMENT DEED

THIS AMENDED AND RESTATED CHANNEL IMPROVEMENT EASEMENT DEED (this "**Easement Deed**") is made this ___ day of May, 2016 (the "**Effective Date**"), between **[a and b:** UNION PACIFIC RAILROAD COMPANY, a Delaware corporation **/c and d:** STANDARD REALTY AND DEVELOPMENT COMPANY, a California corporation**]** ("**Grantor**"), and SANTA CLARA VALLEY WATER DISTRICT, a special district created by the California legislature ("**Grantee**"), whose address is 5750 Almaden Expressway, San Jose, California 95118.

[a: Francis L. Wrigley and Beatrice C. Wrigley, as predecessors in interest to Grantor, and Grantee entered into that certain instrument dated as of April 7, 1955 and recorded in the Official Records of Santa Clara Valley on April 19, 1955 at Reception No. 1078040 (the "**Original Easement Deed**") whereby Grantor granted to Grantee an easement for a drainage ditch along and across the real property described in the Original Easement Deed. Grantor and Grantee now hereby desire to amend and restate the Original Easement Deed in its entirety.**]**

CONFORMED

[b: The Western Pacific Railroad Company, as predecessor in interest to Grantor, and Grantee entered into that certain instrument dated as of March 15, 1955 and recorded in the Official Records of Santa Clara Valley on April 19, 1955 at Reception No. 1078042 (the "**Original Easement Deed**") whereby Grantor granted to Grantee an easement for a drainage ditch along and across the real property described in the Original Easement Deed. Grantor and Grantee now hereby desire to amend and restate the Original Easement Deed in its entirety.**]**

[c: Grantor and Grantee entered into that certain Grant of Easement dated as of November 2, 1978 and recorded in the Official Records of Santa Clara Valley on November 13, 1978 at Reception No. 6198684 (the "**Original Easement Deed**") whereby Grantor granted to Grantee an easement for flood control and/or storm water purposes in, upon, over and across the real property described in the Original Easement Deed. Grantor and Grantee now hereby desire to amend and restate the Original Easement Deed in its entirety with respect to any real property described in the Original Easement Deed that is currently owned by Grantor, as such real property is described on the print marked **Exhibit A**, attached hereto and hereby made a part of this Easement Deed (the "**Premises**").**]**

[d: Grantor and Grantee entered into that certain Grant of Easement dated as of November 21, 1978 and recorded in the Official Records of Santa Clara Valley on December 21, 1978 at Reception No. 6238066 (the "**Original Easement Deed**") whereby Grantor granted to Grantee an easement for flood control and/or storm water purposes in, upon, over and across the real property described in the Original Easement Deed. Grantor and Grantee now hereby desire to amend and restate the Original Easement Deed in its entirety with respect to any real property described in the Original Easement Deed that is currently owned by Grantor, as such real property is described on the print marked **Exhibit A**, attached hereto and hereby made a part of this Easement Deed (the "**Premises**").**]**

Grantor and Grantee have entered into that certain Channel Improvement Construction and Maintenance Agreement dated as of the Effective Date (the "**C&M Agreement**"), the terms and conditions of which are incorporated into this Easement Deed by reference, in connection with Grantee's Berryessa Creek Flood Risk Management Project and Grantee's use of the Premises **[a and b:** (as such term is defined below)**]**. The provisions of this Easement Deed are in addition to, and not in limitation of, the C&M Agreement (including all subsequent supplements and modifications of the C&M Agreement).

Grantor, for good and valuable consideration the receipt and sufficiency of which are hereby acknowledged, grants to Grantee, its successors and permitted assigns, non-exclusive, perpetual and assignable rights and easements (collectively, the "**Easements**") in Milpitas, Santa Clara County, California on, over and across **[a and b:** the real property as described on the print marked **Exhibit A**, attached hereto and hereby made a part of this Easement Deed (the "**Premises**") **/c and d:** the Premises**]** for the limited purposes of: (i) constructing, inspecting, maintaining, repairing, renewing, using and operating channel improvement works, (ii) **[a and b:** Intentionally Omitted, **/c and d:** constructing, maintaining and using an access road in accordance with the Plans (as such term is defined in the C&M Agreement) (the "**Access Road**",**]** (iii) clearing, cutting, felling, removing and disposing of timber, trees, underbrush, buildings and/or other improvements from the Premises that impede or obstruct the flow of flood waters, and (iv) excavating, dredging, cutting away and removing land and placing dredge or

CONFORMED

spoil material on the Premises in accordance with the Plans; in each case reserving, however, to Grantor and its successors and assigns, all such rights and privileges in the Premises as may be used without interfering with or abridging the Easements acquired pursuant hereto. Notwithstanding the foregoing, Grantee agrees that it shall not remove any of Grantor's railroad facilities existing as of the Effective Date from the Premises (unless otherwise permitted by the Plans), and shall not remove any of Grantor's railroad facilities contemplated by the Plans or that may be constructed in the future by Grantor unless such future railroad facilities interfere with or abridge the Easements acquired hereunder. For the avoidance of doubt and without limiting any provisions contained in the C&M Agreement and this Easement Deed, Grantee shall obtain prior approval from Grantor, which approval shall not be unreasonably withheld, before commencing any work or the performance of any activity or work in which any person or equipment will be within twenty-five (25) feet of any track **[c and d:** (with the exception of the use of the portion of the Access Road separated from Grantor's property or operations by fencing in accordance with the Plans for the limited purposes of ingress and egress to and from the channel improvement works which Grantor acknowledges does not require prior approval)**]**, as required in Exhibit B, Section 5 of the C&M Agreement.

The Easements are granted for the purposes described above only, and are subject to the terms and conditions of the C&M Agreement and this Easement Deed. Without limiting the foregoing, this grant does not include the right to install utilities of any nature, including without limitation, fiber optic, cable television, electrical, gas or liquid distribution, or telephone lines.

Grantor, its successors and assigns, reserves the right to use and maintain its entire property to construct, add, maintain, repair, renew, use, operate, change, modify or relocate railroad tracks, signal, communication, fiber optics and other railroad facilities upon, under, over, along or across any or all parts of its property, all or any of which may be freely done by Grantor; provided, however, that any use of the Premises shall not interfere with or abridge the rights and easements acquired by Grantee hereunder.

This Easement Deed is also subject to all outstanding superior rights (including without limitation those in favor of easement holders, licensees and lessees of Grantor's property, and others) and the right of the Grantor to renew and extend the same, and is made without covenant of title or for quiet enjoyment. It shall be Grantee's sole obligation to obtain such additional permission, licenses and grants necessary on account of any such existing rights. Notwithstanding the foregoing, Grantor understands and agrees that it shall not grant a future right in the Premises that expressly interferes with or abridges the Easements.

The Easements are also limited to such rights as Grantor may have in the Premises and is granted to and accepted by the Grantee in an **"AS IS," "WHERE IS"** and **"WITH ALL FAULTS"** basis and condition without warranty, express or implied. No damages shall be recoverable from Grantor because of any dispossession of Grantee or because of failure of, or defect in, Grantor's title.

The terms and conditions of this Easement Deed inure to and will bind Grantor's and Grantee's successors and assigns.

CONFORMED

The Easements shall take effect upon the Effective Date and shall continue in full force and effect for as long as the channel improvements remain on the Premises, unless sooner terminated as provided in the C&M Agreement.

Within ninety (90) days after termination howsoever of the Easements or this Easement Deed, Grantee, at its sole expense, shall (i) peacefully and quietly vacate and surrender possession of the Premises, and (ii) deliver to Grantor a fully executed and acknowledged release and quitclaim of the Premises in recordable form satisfactory to Grantor.

IN WITNESS WHEREOF, Grantor and Grantee have caused this Easement Deed to be executed as of the Effective Date.

Attest:

_____
Secretary

(Seal)

[c and d: STANDARD REALTY AND DEVELOPMENT COMPANY, a California corporation

By: _____
Tony K. Love, Chairman and CEO**]**

Attest:

_____
_____ Secretary

(Seal)

[a and b: UNION PACIFIC RAILROAD COMPANY, a Delaware corporation

By: _____
Renay J. Robison, Director – Real Estate**]**

Attest: Michelle L. King, CMC

_____
Clerk/Board of Directors

SANTA CLARA VALLEY WATER DISTRICT, a special district created by the California legislature

By: _____
Printed Name: _____
Title: _____

CONFORMED

ACKNOWLEDGMENT

STATE OF NEBRASKA)
) ss.
COUNTY OF DOUGLAS)

On _____, 2016, before me, _____, Notary Public in and for said County and State, personally appeared _____ and _____, who are _____ and _____, respectively, of **[c and d:** Standard Realty and Development Company, a California corporation, **/a and b:** Union Pacific Railroad Company, a Delaware corporation,**]** and who are personally known to me (or proved to me on the basis of satisfactory evidence) to be the persons whose names are subscribed to in the within instrument, and acknowledged to me that they executed the same in their authorized capacities, and that by their signatures on the instrument the persons, or the entity upon behalf of which the persons acted, executed the instrument.

WITNESS my hand and official seal.

_____
Notary Public

(Seal)

CONFORMED

ACKNOWLEDGMENT

A NOTARY PUBLIC OR OTHER OFFICER COMPLETING THIS CERTIFICATE VERIFIES ONLY THE IDENTITY OF THE INDIVIDUAL WHO SIGNED THE DOCUMENT TO WHICH THIS CERTIFICATE IS ATTACHED, AND NOT THE TRUTHFULNESS, ACCURACY, OR VALIDITY OF THAT DOCUMENT.

STATE OF CALIFORNIA }
}
COUNTY OF _____ }

On _____, 201__, before me, _____, personally appeared _____, who proved to me on the basis of satisfactory evidence to be the person(s) whose name is subscribed to the within instrument and acknowledged to me that he executed the same in his authorized capacity, and that by his signature on the instrument the person, or the entity upon behalf of which the person acted, executed the instrument.

I certify under PENALTY OF PERJURY under the laws of the State of California that the foregoing paragraph is true and correct.

WITNESS my hand and official seal.

_____ (Notary Seal)
Signature of Notary Public

CONFORMED

EXHIBIT A
TO
EASEMENT DEED

Legal Description and Depiction of the Premises

(see attached)

CONFORMED

EXHIBIT H

TO CHANNEL IMPROVEMENT CONSTRUCTION & MAINTENANCE AGREEMENT

Estimate

(see attached)

CONFORMED

EXHIBIT H

UNION PACIFIC RAILROAD COMPANY

SUMMARY ESTIMATE SHEET

Location: Milpitas Industrial Lead, Milpitas, California

DOT No. 833901Y, MP 11.67

Project: Wooden Trestle replacement

Estimate:

Flagging($1500 / day) x 30 days	$45,000
Remove rail from existing bridge, Remove track structure from adjacent grade crossing,	
Install new track structure over new culvert and through grade crossing,	
Install ties in approaches to grade crossing and culvert (UP Forces)	$302,588
Engineering Review and Inspection	$25,000
Subtotal	$372,588
Contingency (10%)	$37,259
Total estimate cost:	**$409,547**

***Note:** This is an estimate only. Railroad shall bill on an actual cost basis.

CONFORMED

EXHIBIT H

DATE: 2016-05-20

ESTIMATE OF MATERIAL AND FORCE ACCOUNT WORK
BY THE
UNION PACIFIC RAILROAD

THIS ESTIMATE GOOD FOR 6 MONTHS EXPIRATION DATE IS :2016-11-18

DESCRIPTION OF WORK:
MILPITAS,CA/ MILTPITAS BLVD./ DOT 833901Y/ MILPITAS INDU LEAD, MP 11.67
INSTALL 104 TF CONCRETE XING-CURVED 15 DEGREE, 115# RAIL, 10W TIES.
REPLACE TRACK ACROSS FORMER BRIDGE BEING RETIRED BY OTHERS.
PROJECT IS 100% RECOLLECTABLE, 50% FROM THE FEDERAL SOURCES AND 50% FROM
LOCAL SOURCES, USING THE FEDERAL LABOR ADDITIVE RATE W. OVERHEAD AND

PID: 95436 AWO: MP,SUBDIV: 11.67, MILPITASIN
SERVICE UNIT: 19 CITY: MILPITAS STATE: CA

DESCRIPTION	QTY	UNIT	LABOR	MATERIAL	RECOLL	UPRR	TOTAL
ENGINEERING WORK							
ENGINEERING			2266		2266		2266
FLAGGING			2220		2220		2220
TRACK SUPERVISORS			2220		2220		2220
LABOR ADDITIVE 234.24			15693		15693		15693
TOTAL ENGINEERING			22399		22399		22399
TRACK & SURFACE WORK							
BALAST/SURFACE & LINE	4.00	CL	5111	3838	8949		8949
BILL PREP FEE				900	900		900
ENVIRONMENTAL PERMITS				10	10		10
EQUIPMENT RENTAL				2500	2500		2500
FIELD WELDING			6451	548	6999		6999
FOREIGN LINE FREIGHT				1210	1210		1210
HOMELINE FREIGHT				900	900		900
ROADWAY APPROACH				10000	10000		10000
OTM			6532	10454	16986		16986
RAIL	640.00	LF	16972	10598	27570		27570
RDXING-CURVED, 15D00M	104.00	TF	5773	41308	47081		47081
SAW CUT CONTRACT				2000	2000		2000
TRACK-INSTAL			3835	10000	13835		13835
XTIE	199.00	EA	21124	17218	38342		38342
SALES TAX				2723	2723		2723
MATL STORE EXPENSE				956	956		956
LABOR ADDITIVE 234.24%			99228		99228		99228
TOTAL TRACK & SURFACE			165026	115163	280189		280189
LABOR/MATERIAL EXPENSE			187425	115163			
RECOLLECTIBLE/UPRR EXPENSE					302588	0	
ESTIMATED PROJECT COST							302588
EXISTING REUSEABLE MATERIAL CREDIT					0		
SALVAGE NONUSEABLE MATERIAL CREDIT					0		
RECOLLECTIBLE LESS CREDITS					$302588		

THE ABOVE FIGURES ARE ESTIMATES ONLY AND SUBJECT TO FLUCTUATION. IN THE EVENT OF AN INCREASE OR DECREASE IN THE COST OR QUANTITY OF MATERIAL OR LABOR REQUIRED, UPRR WILL BILL FOR ACTUAL CONSTRUCTION COSTS AT THE CURRENT EFFECTIVE RATE.

FILE:EENG205.TSO.EPM.ESTIMATE(P095436A)

CONFORMED

For Information Purposes Only

CONFORMED

Appendix K

County of Santa Clara Encroachment Permit

CONFORMED

SANTA CLARA COUNTY ROADS AND AIRPORTS DEPARTMENT

ENCROACHMENT PERMIT # 27 160191

INSPECTIONS REQUIRED!

TO SCHEDULE INSPECTIONS CALL 408-573-2429

24 HOURS BEFORE STARTING ANY WORK

27 160191

THE COUNTY OF SANTA CLARA 1850

KEEP THIS PERMIT ON JOBSITE

SEE ATTACHMENTS FOR PERMIT REQUIREMENTS

Permit Number	Date Issued	Expiration Date
27 160191	16-May-16	16-Aug-16

Issued By: Gerry Dutra

Date Completed

Date Cancelled

Construction Insp. By

Electrical Insp. By

Permit Office Final Date

PERMITTEE

Name **Judy Nam** Phone **(408) 630-2474**

Company **Santa Clara Valley Water District** E-Mail: **Jnam@valleywater.org**

Mailing Address: **5750 Almaden Expressway, A-2144** Fax:

City: **San Jose** State **Ca** Zip **95118**

LOCATION OF WORK

Address

Road Name: **Montague Expressway**

Cross Street: **Berryessa Creek / near S. Milpitas Blvd**

Work Order No:

Locaide: 25-40-79 Zone 2

DESCRIPTION OF WORK

See Attached MEMORANDUM - Exhibit A for "Bidding Purposes Only" dated May 10, 2016.

GENERAL PROVISIONS

All requirements and provisions contained within the attached General Provisions document must be abided by at all times unless noted otherwise.

SPECIAL PROVISIONS In addition to the attached General Provisions the following Special Provisions apply:

See attached MEMORANDUM - Exhibit A for "Bidding Purposes Only", General Provisions, Additional Special Provisions - Expressways, Project Plans (U.S. Army Corps of Engineers - San Francisco District In Cooperation with SCVWD, Upper Berryessa Creek Flood Risk Management Project), and Extension Fee Schedule.

FEES	Plan Check	Inspection	* Trench Cut	Permit Fee	**Deposit Amount	☑ No Fee
	$0.00	$0.00	$0.00	$0.00	$0.00	

** IF PERMIT HAS A WBS NO. THE TOTAL ENCROACHMENT PERMIT FEE IS AN ESTIMATED DEPOSIT; REFUND OR ADDITIONAL FEE WILL BE DETERMINED AFTER ENCROACHMENT PERMIT IS SIGNED OFF AND ACCOUNTING IS COMPLETE. *NOTE: Trench cut to be measured upon completion, and an additional fee assessed for it.

BONDS	AMOUNT	TYPE	RELEASE DATE
	$0.00		

Roads Dept Engineer D. Boyd

SP #:

****WBS:** 603-90-

CONFORMED

FOR BIDDING PURPOSES ONLY

27-160191

CONFORMED

FOR BIDDING PURPOSES ONLY

County of Santa Clara

Roads and Airports Department

101 Skyport Drive
San Jose, California 95110-1302
(408) 573-2400

MEMORANDUM – Exhibit 'A'

FOR BIDDING PURPOSES ONLY
27-160191

DATE: May 10, 2016

TO: **Judy Nam,** Project Manager
SCVWD

FROM: **David Boyd**
Land Development Services

SUBJECT: **Clearance for a County *Conditional* Encroachment Permit**
CONDITIONAL PERMIT - SCVWD and U.S. Army Corp of Engineers are implementing the Upper Berryessa Creek Flood Risk Management Project, which will enlarge 2.2 miles of Berryessa Creek to provide 1% flood protection. The project will require reconstruction of the channel within County R&A property located downstream of the Montague Expressway Bridge crossing Berryessa Creek.

FILE NO./JOB: **160191**

LOCATION: **Montague Expressway crossing Berryessa Creek**

SPECIAL PROJECT NOTES:

There is a 5-yr warranty when the project is completed (Reference to County Ordiance NS-7039, Section B17-36.4). County's Roads Operations Engineering will be the one to determine what constitue failure based on acceptable industry standards including cracks and separation in the microsurfacing, settlement where the trench repairs took place, damaged pavement edges along the trenches are considered failures.

Erosion and Sediment Control Notes:

1. "The Utility Company, their employees, subcontractors, and/or any person performing construction activities shall install and maintain construction Best Management Practices (BMPs) on the project site and within the Santa Clara County Road Right of Way throughout the duration of construction and until the establishment of permanent stabilization and sediment control to prevent the discharge of pollutants including sediment, construction materials, excavated materials, waste materials into the Santa Clara County Road Right of Way, storm sewer waterways, and roadway infrastructure. BMPs shall include, but not be limited to, the following:
    a. Prevention of pollutants in storm water discharges from the construction site and the contractor's material and equipment laydown/staging areas,
    b. Prevention of tracking of mud, dirt and construction materials onto public road right of way, and
    c. Prevention of discharge of water runoff during dry and wet weather conditions onto public road right of way."

"FOR BIDDING PURPOSES ONLY"

CONFORMED

CONFORMED

FOR BIDDING PURPOSES ONLY
27-160191

2. "The Utility Company, their employees, subcontractors, and/or any person performing construction activities shall ensure that all temporary construction facilities, including but not limited to construction materials, deliveries, hazardous and non-hazardous material storage, equipment, tools, portable toilets, concrete washout, garbage containers, laydown yards, secondary containment areas, etc. are located outside the Santa Clara County Road Right of Way."

Improvement Plan Construction Notes:

1. "All Work in the County Road Right of Way requires an encroachment permit from the Roads and Airports Department. Each individual activity requires a separate permit – i.e. retaining walls, driveway approaches, temporary construction entrances, fences, landscaping, tree removal, storm drainage improvements, all utility operations (relocations, replacements, abandonments, temporary facilities, and/or new facilities for cable, electric, gas, sewer, water), etc."

2. "Roadways designated as Not County maintained roads as shown upon this plan, will not be eligible for County maintenance until the roadways are improved (at no cost to the County) to public maintenance road standards approved by the Board of Supervisors and in effect at such time that the roadways are considered for acceptance into the County's Road System."

95% Plan Check Review Comments for Conditional Permit:

A. Referring to the retaining wall at the southeast corner of the bridge referring to sheet C-108, the Army Corps plans do show that the Water District will tie into the Montague channel at the transition at 164+42.96, which is already stated on the plans as transitioning from 12' to 16'.

B. Referring to the 18' access road on the east side of the creek, south of the bridge where there is no access to Montague Expressway. Per the Water District's review, the 20' wide access road will not be shown on the typical cross section because that section is for the entire length of channel on those particular sheets. The Water District will modify the following note on the plan view: "*prop access road PIP (VTA)" to "prop access road by VTA: PIP and transition from 16'* "

C. Grading will need to be coordinated by all parties within the Montague project depending upon who gets there first.

D. Any traffic control set-up MUST be coordinated with the County of Santa Clara, City of Milpitas, SCVWD, UPPRR, VTA, and County Contractor's OC JONES and Sons.

E. Any potholes that are found within the County ROW will need to be repaired by the SCVWD contractor related to this project.

It is recommended that a County ***Conditional*** Encroachment Permit "for bidding purposes only" be issued to ***Santa Clara Valley Water District*** per the preliminary terms and conditions, as well as the following Special Provisions which may be subject to change and/or revision.

1. Prior to construction, Applicant shall conduct a preconstruction meeting involving the County inspector, Applicant's representatives and any contractor working on this project.
2. Protect County underground traffic signal and fiber optics facilities. ***Call USA 48 hours prior to performing work. Refer to all of Standard Specification Section 86 relating to Signals, Lighting, Traffic Communications & Other Electrical Systems.***
3. Any damage to the existing county fiber optic cable will result in replacement of the fiber cable from existing end-to-end splices in accordance with the permit provision in section II subsection 6.A thru 6.E
4. Fiber Optic trunk line belonging to Santa Clara County Roads & Airports in area of work. Any vehicle detection loops damaged by work are to be replaced in 48hrs.

CONFORMED

CONFORMED

5. *Contractor needs to recess all steel plates and plates are traffic rated non-skid plates after each shift!!*
6. Contractor shall be responsible for restoring pavement to like or better condition.
7. Any excavation shall conform with County Standard drawing U/3A with the requirement that pavement section shall match existing. Please refer to ***Additional Special Provisions – Expressways Only.***
8. After project is completed Contractor **MUST** supply the county red-line as built for our records & use. The County will require to have all compaction reports when the project is completed.
9. Prior to start of any construction activity the contractor shall request a construction encroachment permit. Submit a traffic control plan to the County. **The County may take at least three (3) weeks to review the plan and may request revisions prior to issuing the encroachment permit for construction use.** When the Traffic Control Plan is completed please contact the permit issuance unit at 1.408.573.2475.
10. For any striping in County ROW to be thermoplastic and replaced per existing striping. County traffic section to approve striping layout prior to final installation.
11. Working hours 9:00am to 3:00pm Monday through Friday (only).
12. The Contractor **MUST** notify all business and residents of pending construction work.
13. Slurry from pavement/curb cutting shall be vacuum and disposed properly. Any stock pile excavated material to be covered by a tarp. No dirt/debris shall be tracked or washed into storm drain (**Montague Expressway**). Do not broadcast spoils on-site. Sweep daily or as directed by County. Excavated materials shall be disposed off-site properly at approved site.

Attachments: U.S Army Corps of Engineers – San Francisco District In Cooperation with Santa Clara Valley Water District. Upper Berryessa Creek Flood Risk Management Project, Santa Clara County, California
Additional Special Provisions – Expressways Only.

Please call me at 573-2450 if you have any questions.
Cc: File# 160191, DB, RC

"FOR BIDDING PURPOSES ONLY"
CONFORMED
FOR BIDDING PURPOSES ONLY
27-160191

CONFORMED

FOR BIDDING PURPOSES ONLY
27-160191

GENERAL PROVISIONS

I. WORK REQUIREMENTS

1. **Inspection** – The Permittee shall request initial inspection from the County at 408-573-2429 a minimum of twenty-four (24) hours prior to any work being performed. The Permittee shall request final inspection from the County within ten (10) days from the date of completion of the work at 408-573-2429.

2. **Legal Enforcement** – Work under the Encroachment Permit (Permit) must comply with provisions in the following references, whether or not they are set forth herein:
   - California Streets and Highways Code,
   - California State Water Resources Control Board NPDES General Permit for Storm Water Discharges Associated with Construction & Land Disturbance Activities (Order No. 2009-0009-DWQ or any amendment thereof),
   - California Regional Water Quality Control Board, San Francisco Bay Region, Municipal Regional Storm Water NPDES Permit (Order No. R2-2009-0074, NPDES Permit No. CAS612008, October 14, 2009, or any amendment thereof),
   - Central Coast Regional Water Quality Control Board, Revised Regional Storm Water Management Plan for City of Gilroy, City of Morgan Hill, and County of Santa Clara (South County) (February 22, 2010 or any amendments thereof),
   - County of Santa Clara Ordinance Code,
   - County of Santa Clara Standard Details and Standard Specifications,
   - Local ordinances and regulations of applicable municipality where the work is located, and
   - Other regulatory agencies.

3. **General Instructions** – All work is to be completed in accordance with these General Provisions attached to the Permit, any special provisions or conditions shown on the Permit itself. Work plans and specifications, required bonds and insurance, must be submitted, approved and on file in the Roads and Airports Department (hereinafter County) prior to issuance of the Permit. If additional engineering, soils investigations or geological investigations are required, they shall be provided by the Permittee. All survey work including construction staking shall be provided by the Permittee.

4. **Emergency Contacts** – Names and telephone numbers of two responsible persons shall be furnished to the Permit Office prior to start of work for emergency contacts, 24 hours a day, seven days a week. The Permittee or the Contractor shall have a supervisory representative available for contact on the project at all times during the construction.

5. **On Site** – This Permit shall be kept at the site of work and must be shown to any authorized representative of the County or any law enforcement officer upon demand.

CONFORMED

6. **Equipment and Material Storage** – No equipment (construction or other) or material shall be stored within the County ROW near the edge of the pavement, within the traveled way, or within the shoulder line which would create a hazardous condition or nuisance for the traveling public. Any material stored at the site of work must be shown to any authorized representative of the Department or any law enforcement officer upon demand. All proposed construction staging areas shall be presented to the Department for review and approval prior to use

7. **Traffic Protection** – The Permittee shall make adequate provisions for the protection of the traveling public. Two copies of a proposed traffic control plan shall be submitted to the Permit Office for processing prior to issuance of a permit. All work which requires a traffic detour requires the Permittee to notify Santa Clara County Communications at (408) 299-2501 and the appropriate local garbage collection company of the date(s), time(s) and details of all detours.

8. **Traffic Lanes** – All traffic lanes shall be open to the traveling public during all hours of darkness, and on all weekends and holidays unless prior written approval is obtained from the County. One-way traffic may be permitted under the control of not less than two competent flagmen or as required by the latest issue of the California Manual on Uniform Traffic Control Devices for Streets and Highways during normal working hours with prior approval in writing from the County. No variance of the requirements of this Section **I.7.** will be allowed without prior written approval from the County. No work within the ROW shall be undertaken until all materials, equipment, and labor forces are available to pursue the work to completion.

9. **Signs** – Any signs to be constructed in the execution of this Permit are to be approved by the County prior to placement of any signs.

10. **Temporary Traffic Control** – Temporary traffic control, including traffic control devices and signs, shall be installed in accordance with Part 2 – Signs, Part 6 – Temporary Traffic Control and any other applicable parts of the latest issue of the California Manual on Uniform Traffic Control Devices for Streets and Highways.

11. **Drainage** – If the work performed by the Permittee interferes with the established surface drainage pattern ample provision shall be made by the Permittee to provide for said drainage with prior approval in writing from the County before any work is performed. If there are any negative impacts to the established surface drainage patterns the Permittee shall take immediate steps to mitigate the negative impacts and restore the surface drainage patterns existing prior to any work being performed to the County's satisfaction and at no cost to the County.

12. **Permanent Monuments** – Any property corner stake, street monument or other permanent survey monument that will be disturbed during construction

CONFORMED

shall be shown on the plans for the work and referenced, removed and reset by competent persons legally qualified to perform this work.

13. **Facility Relocation** – Permittee shall be responsible for any required relocation, and cost thereof, of existing utilities or encroachments which may be affected by this Permit.

14. **Monument Corner Records** – Section 8771 of the Business and Professional Code, and Section 732, 149.5, and 810.5 of the Streets and Highways Code, Rev. 1995, mandates that prior to any reconstruction or relocation of streets or highways, all survey monuments are to be located and referenced to stable objects outside the construction area by or under the direction of a person authorized to practice land surveying. A corner record which shows the reference ties is to be filed in the office of the County Surveyor. After construction, permanent monuments are to be reset and a second corner record shall be filed. The Permittee is responsible for the cost of this work.

15. **Sight Distance** – As related to and affected by the improvements covered by this Permit, Permittee shall provide and maintain adequate sight distance per the latest Caltrans standards. Typical compliance may include, but not limited to, trimming and/or removal of trees; trimming and/or removal of vegetation; and, grading of embankments to provide for adequate sight distance. Before and after photos shall be taken by the Permittee and provided to the County for the files and reference as needed. Any costs associated with these photos shall be the sole responsibility of the Permittee.

16. **Storm Water Pollution Prevention** – The work performed under this Permit is subject to the National Pollutant Discharge Elimination System (NPDES) regulations governed by State, San Francisco Bay Regional Water Quality Control Board for work sites located in the north County San Francisco Bay watersheds in (Region 2), and Central Coast Regional Water Quality Control Board for work sites located in the South County Monterey Bay watersheds (Region 3). (The following link will help to find the Regional Water Board for a particular work site: http://www.waterboards.ca.gov/waterboards_map.shtml.)

    The County of Santa Clara Department of Roads & Airports, as the designated Owner of the public road and expressway facilities where the work occurs, is responsible for preventing and/or mitigating potential chemical release, erosion, and sedimentation impacts associated with storm water runoff that discharges to a municipal separate storm drain system or waterway.

    A. With respect to prevention and mitigation of construction-related storm water impacts to the public road and expressway facilities, the Permittee must develop and submit a Storm Water Pollution Prevention Plan (SWPPP) for review and approval by the County prior to the start of construction. The Permittee must implement the SWPPP during construction. The SWPPP may be developed as part of the entire project site's SWPPP and must identify appropriate storm water pollution prevention and treatment measures or Best Management Practices (BMPs)

CONFORMED

including, but not limited to, to the following practices applicable to the public road and expressway facilities:

a. Reduction of pollutants in storm water discharges from the construction site and the contractor's material and equipment laydown/staging site in connection with construction activities.
b. Prevention of tracking of mud, dirt and construction materials onto public streets and expressways from the construction and equipment/material lay-down/staging sites.
c. Prevention of discharge of water runoff during dry and wet weather onto public streets and expressways from the construction and equipment/material lay-down/staging site.
d. Prevention of soil erosion and sedimentation from construction and equipment/material lay-down/staging sites entering public street and expressway right-of-ways.

The Permittee must maintain at the construction site the County-approved SWPPP, and revise the SWPPP as necessary or required by the County or the regulatory agency if, during construction, conditions (such as change in construction operations, construction staging modification, change in site conditions, or offsite drainage impacts) occur that affect the ability to implement the SWPPP effectively or the ability of the SWPPP to meet the objectives for water pollution control.

For improvements for which construction disturbs one acre of land or more, the Permittee must, in addition to preparing a SWPPP, obtain coverage under the State Construction General Permit and file a Notice of Intent with the State Water Resources Control Board prior to commencement of construction. (For details, go to: www.swrcb.ca.gov/water_issues/programs/stormwater/construction.shtml).

B. The following manuals are available to assist the Permittee in developing the SWPPP for the on-site and off-site improvements:

a. Guidelines for Construction Projects prepared by California Regional Water Quality Control Board (available for purchase on DVD at http://store.abag.ca.gov/construction.asp#e); and
b. Erosion and Sediment Control Field Manual (4th Edition) prepared by the California Regional Water Quality Control Board (available for purchase on DVD at http://store.abag.ca.gov/construction.asp#e); and
c. Storm Water Best Management Practice Handbook for Construction Activity (November 2009 or latest edition) prepared by California Storm Water Quality Association (available by subscription at https://www.casqa.org/casqastore/entitiy/tabid/169/c-4-best-management-practice-bmp-handbooks.aspx).

C. Exemptions:

CONFORMED

a. SWPPP preparation and submittal by the Permittee is not required for the following types of projects:

i. Improvements related to individual detached single-family homes, such as construction, repair or replacement of sidewalk, curb and gutter, and/or driveway with impervious surface, that are not part of a larger plan of development <u>and</u> that disturb less than one acre of land.

ii. Activities related to maintenance and improvement of existing utilities including, but not limited to, routine maintenance, scheduled and emergency repairs, and abandoning and/or upgrading utility lines and associated facilities.

iii. Construction activities related to installation of new underground and/or overhead utilities (such as conduits, substructures, pipelines, towers, poles, cables, wires, connectors and other associated equipment) including, but not limited to, potholing, concrete and asphalt removal and replacement, trenching, excavation, boring and drilling, and pipeline and substructure installations, that disturb less than one acre of land.

b. For projects that receive exemptions under Section I.16.C.a., the Permittee and its contractor must implement best management practices (BMPs) to prevent construction materials, excavated materials, waste materials, and sediment caused by erosion during construction activities, on-site or off-site, from entering the storm drain system and waterways.

c. For projects that are exempt under Section **I.16.C.a**, the Permittee must also comply with the BMP Checklist furnished by the County.

II. PERMIT PROVISIONS

1. **Revocation** – This Permit is revocable in accordance with the procedures and requirements of California Streets and Highways Code.

2. **Indemnification** – The Permittee shall fully indemnify, defend, and hold harmless the County of Santa Clara (hereinafter "County"), it's officers, agents and employees from any claim, liability, loss, injury or damage arising out of, or in connection with, performance of this Agreement by the Permittee, it's Contractor and/or it's agents, employees or Subcontractors, excepting only loss, injury or damage caused by the sole negligence or willful misconduct of personnel employed by the County. It is the intent of the parties to this Agreement to provide the broadest possible coverage for the County. The Permittee shall reimburse the County for all costs including, but not limited to, attorneys' fees, expenses and liabilities incurred with respect to any litigation in which the Permittee is obligated to indemnify, defend and hold harmless the County under this Agreement.

A. Issuance of a permit authorizing construction does not release the Developer, Permittee or its Engineer from the responsibility for the correction of errors or omissions contained in the plans. If, during the

CONFORMED

course of the construction, the public interest requires a modification of (or departure from) the specifications and/or plans, the County shall have the authority to require:

a. The suspension of work;
b. The necessary modification to the specifications and/or plans; and,
c. To specify the manner in which the same is to be made.

Any cost associated with this Section **II.2.A** shall be the sole responsibility of the Permittee.

3. **Insurance** – The Permittee shall obtain insurance as required by the County in the attached exhibit and shall provide a certificate of insurance verifying such insurance to the County prior to any work being performed. The County, its officers, employees and agents shall be named as additional insured.

4. **Bonds** – The Permittee shall obtain a performance bond in the amount indicated when required by the County as a condition of the permit and shall provide a certified copy of the bond verifying such bond in the amount required by the County.

5. **Bond Release** – If a Performance bond is posted, it will be released by the County after a written request for a final inspection and verification by the County the work has been satisfactorily completed. Release of the Performance bond is subject to the Permittee providing any Maintenance bond or Deferred Maintenance Agreement required by the County.

6. **Damages Caused by Permittee/Repairs** – All necessary repairs resulting from the encroachment permit work shall be made in accordance with County standards and specifications at the sole expense of the Permittee. The Permittee is required to repair any damage caused by the Permittee or the Contractors as a consequence of labor performed under the Permit within the time indicated by the County. If the Permittee fails to make the repairs within the time indicated, the County is authorized to repair the damage and recover all cost incurred, including overhead and administrative costs, from the Permittee, the surety or the insurance carrier.

   A. Prior to any construction activity in the vicinity of the fiber-optic facilities (i.e., conduit, fiber-optic cable, pull-box, splice enclosure, termination panel, and any related fiber-optic improvements), the Permittee or the Contractor shall pothole to locate, identify, and provide necessary precautionary measures to protect the existing fiber-optic facilities within the project limits from being damaged by construction activities. Potholing in dirt areas shall be performed by hand - no power tools or equipment shall be used.

   B. If the fiber-optic facilities are damaged by the Permittee or the Contractor, the Permittee or the Contractor shall make the necessary repair to the damaged fiber-optic facilities in accordance with Section 86.01.06 "Maintaining Existing and/or Temporary Electrical Systems and Traffic

CONFORMED

Communication Systems" of the County Standard Specifications and the following.

C. Repair and replacement of damaged fiber-optic cable and related facilities shall be performed as follows:

a. Within 48 hours of the damage occurring, the Permitee or the Contractor shall temporarily splice the fiber-optic cable using mechanical or fusion splicing, at the sole discretion of the County. After completion of temporary repairs, the County will determine whether the end equipment operates satisfactorily. If not, the County may direct the Permittee to replace the temporary splice within 48 hours. This shall be considered an interim repair only to restore service. The Permittee or the Contractor shall permanently repair other damaged facilities such as conduit and pull-box, unless prior written approved is obtained otherwise from the County.

The repair shall be undertaken in the nearest junction box, by pulling available slack in the cable. If, in the determination of the County, insufficient slack is available, a new junction box shall be installed as directed.

b. Within 30 days after the acceptance of the interim repair by the County, the Permittee or its Contractor shall obtain a modified encroachment permit and replace the damaged cable between the system's end-to-end splice points installed during the initial installation (as shown on the Fiber Splicing Details Map available for review in the Engineering Office of Traffic and Electrical Operations). During this permanent repair process, the fiber-optic cable shall not be disconnected or the equipment communicating on the cable shall not become non-operational for more than 48 hours. A seven (7) day notice shall be given to the Permit Inspection Unit of the Roads and Airports Department by calling (408) 573-2429 or faxing to (408) 441-0143 prior to any work associated with the repair of the fiber-optic cable. The replacement cable shall be of length and type equivalent to the replaced cable. Cable material, installation and testing shall meet the requirements of the County Standard Specifications as follows:

i. Section 86.02.08E "Fiber-optic Cable",
ii. Section 86.02.09C "Installation of Fiber-optic Cable",
iii. Section 86.02.09O(1) "Fiber-optic Connectors",
iv. Section 86.02.09E(2) "Fiber-optic Cable Splicing",
v. Section 86.02.09G "Fiber-optic Splice Enclosure", and
vi. Section 86.02.13D "Fiber-optic Cable Testing". OTDR and power meter tests shall be done after the repair to assure that a light loss is within the maximum allowable loss. This loss shall be determined by comparison of the test results with OTDR test results on file at the County, derived from the most recent test on each fiber. The OTDR test shall be performed on each fiber strand. The power

CONFORMED

meter test shall be performed only on fibers terminated on both ends. Both tests shall be done at 1,550 nm and 1,310 nm. The Permittee or the Contractor shall record all test results and provide the results to the County for review and acceptance. All testing shall be observed by a representative of the County.

D. In the event that the Permittee or the Contractor fail to make the necessary repairs and/or replacement of the fiber-optic facilities within the timeframe as specified herein, the County may perform the necessary repairs and/or replacement, interim and permanent, of the damaged facilities and recover all costs and expenses in accordance with these General Conditions of the Permit.

E. The Permittee or the Contractor shall guarantee the repair work for a period of one (1) year from the date of acceptance of the work by the County in accordance with Section 5.17 "Correction of Work and Guarantee" of the County Standard Specifications.

7. **Private Property** – This Permit shall not be construed as authorization for excavation and/or grading on private property adjacent to the encroachment or any other work for which a separate permit may be required.

   A. This Permit shall not be construed as authorization for any work for which a separate permit may be required – i.e. a driveway permit does NOT include utility work of any kind; a permit to connect water is separate from a permit to connect gas, electric, or communication.

8. **Relocation Responsibility** – In the event future improvement of the road necessitates relocation of the encroachment authorized by this Permit, the Permittee shall relocate same at their sole expense.

9. **Contracts and Agreements** – This Permit does not release the Permittee from any liabilities contained in other agreements or contracts with the County and other municipal agencies.

10. **Acceptance** – Commencement of any work under this Permit shall constitute acceptance of the conditions and requirements of the permit for the installation or future maintenance of the encroachment whether or not the Permit is signed by said person or an authorized representative of said person, firm or corporation.

CONFORMED

County of Santa Clara – Roads and Airports Department
101 Skyport Drive, San Jose, CA 95110
(408) 573-2475 www.countyroads.org

STORMWATER POLLUTION PREVENTION BEST MANAGEMENT PRACTICES CHECKLIST FOR ALL ACTIVITIES WITHIN THE RIGHT OF WAY (ROW) ACKNOWLEDGEMENT SHEET

Introduction

The County of Santa Clara Roads and Airports Department requires applicants for encroachment permits to comply with certain General Provisions related to stormwater pollution prevention. Construction activities related to maintenance and improvement of existing utilities and installation of new utilities that disturb less than one acre of land are exempt from Encroachment Permit General Provision 16.A. but must implement best management practices (BMPs) to prevent stormwater pollution.

Permittee shall determine the appropriate BMPs to be checked below for the activities being performed within or adjacent to the County right-of-way as part of the permitted project. Additional BMPs may be required if field conditions change or additional stormwater pollution prevention measures are required by the County. For more information, please contact the Roads and Airports Department at (408) 573-2429.

Sediment Control BMPs

X *SE-5 Fiber Rolls*

A fiber roll consists of straw, coir, or other biodegradable materials bound into a tight tubular roll wrapped by netting, which can be photodegradable or natural. When fiber rolls are placed at the bottom of slopes along contours, they intercept runoff, reduce its velocity, release the runoff as sheet flow, allow sedimentation, and also reduce sheet and rill erosion until vegetation is established

X *SE-7 Street Sweeping and Vacuuming*

Sweeping and vacuuming are needed to remove sediment wherever it is tracked from the project site onto public or private paved streets and roads, typically at points of egress. After sweeping is finished, sweeper waste should be properly disposed of at an approved dumpsite.

X *SE-10 Storm Drain Inlet Protection*

Storm drain inlet protection consists of a sediment filter or an impounding area in, around or upstream of a storm drain, drop inlet, or curb inlet to prevent sediment from discharging to the storm drain. Storm drain inlet protection measures temporarily pond runoff before it enters the storm drain, allowing sediment to settle. Temporary geotextile storm drain inserts that attach underneath storm drain grates to capture and filter storm water can also be used. Inlet protection options can be used in combination with the following BMPs:

- ☐ *SE-6 Gravel Bag Berm* - A gravel bag berm is a series of gravel-filled bags placed on a level contour to intercept sheet flows, pond runoff, and allow sediment to settle out.
- ☐ *SE-8 Sandbag Barrier* - A sandbag barrier consists of a row of sand-filled bags placed on a level contour to intercept sheet flows, pond runoff, and allow sediment to settle out. Sandbag barriers should generally be used in conjunction with temporary soil stabilization.
- X *TC-1 Stabilized Construction Entrance/Exit*

  The purpose of a stabilized construction entrance/exit is to reduce or eliminate the tracking of sediment onto public rights of way. A stabilized construction entrance /exit is a pad of aggregate underlain with filter cloth located at a point where traffic will be entering or leaving a construction site.

CONFORMED

FOR BIDDING PURPOSES ONLY
27-160191

Good Site Management BMPs

X *WM-1Materials Delivery and Storage*
The discharge of stormwater pollutants from construction material delivery and storage areas can be prevented or reduced by minimizing the storage of hazardous materials onsite, storing materials in watertight containers and/or containing the storage area with a berm or on an enclosed pad, and conducting regular inspections.

☐ *WM-3 Stockpile Management*
All stockpiles of construction materials (such as soil, soil amendments, sand, pressure treated wood, and paving materials such as Portland cement concrete rubble, asphalt concrete, asphalt concrete rubble, aggregate base, aggregate sub-base or pre-mixed aggregate, and asphalt binder) should be covered with a tarp and protected with a temporary linear sediment barrier prior to the onset of precipitation.

X *Waste Management*
Waste management includes storing materials properly to reduce the possibility of spills, stopping the source of spills, and the immediate containment, clean-up and proper disposal of spilled materials. Solid, liquid and sanitary waste should be properly disposed. Designated waste collection areas and containers should be provided and regular disposal services arranged. All waste containers should be covered. Temporary sanitary facilities should be located away from storm drains and traffic areas.

X *WM-8 Concrete Waste Management*
Stockpile management BMPs should be used to ensure that construction materials, including mortar, concrete, stucco, cement and block, and their associated wastes do not come into contact with stormwater flows. Concrete trucks should be washed only in contained concrete washout areas so that there is no discharge of concrete waste onto site soils or into storm drains.

Non Stormwater Management

☐ *NS-3 Paving and Grinding Operations*
Stockpile management, sediment control and inlet protection BMPs should be implemented to prevent paving and grinding materials or wastes from entering storm drains. When feasible, paving during the rainy season should be avoided. Waste materials should not be washed or swept into storm drains. During saw-cutting and grinding operations, use as little water as possible. Block storm drain inlets using inlet protection BMPs and/or use absorbent materials to contain slurry. Remove saw-cut slurry, using a shovel, vacuum, or dry sweeping, as soon as possible.

X *NS-6 Illicit Discharge*
The site should be inspected before beginning the job for evidence of illicit connections to the storm drain, illegal dumping or discharges. Any pre-existing conditions should be documented and the owner notified. Employees and sub-contractors should be trained to use BMPs to prevent any material from entering storm drains.

X *NS-12 Concrete Curing, NS-13 Concrete Finishing*
Storm drain inlet protection BMPs should be implemented before conducting concrete curing and/or sandblasting. Water from curing and sandblasting operations should be directed to contained collection areas (so that there is no discharge to underlying soils or surrounding areas) and then properly disposed.

CONFORMED

Good Site Management BMPs

X *WM-1Materials Delivery and Storage*

The discharge of stormwater pollutants from construction material delivery and storage areas can be prevented or reduced by minimizing the storage of hazardous materials onsite, storing materials in watertight containers and/or containing the storage area with a berm or on an enclosed pad, and conducting regular inspections.

☐ *WM-3 Stockpile Management*

All stockpiles of construction materials (such as soil, soil amendments, sand, pressure treated wood, and paving materials such as Portland cement concrete rubble, asphalt concrete, asphalt concrete rubble, aggregate base, aggregate sub-base or pre-mixed aggregate, and asphalt binder) should be covered with a tarp and protected with a temporary linear sediment barrier prior to the onset of precipitation.

X *Waste Management*

Waste management includes storing materials properly to reduce the possibility of spills, stopping the source of spills, and the immediate containment, clean-up and proper disposal of spilled materials. Solid, liquid and sanitary waste should be properly disposed. Designated waste collection areas and containers should be provided and regular disposal services arranged. All waste containers should be covered. Temporary sanitary facilities should be located away from storm drains and traffic areas.

X *WM-8 Concrete Waste Management*

Stockpile management BMPs should be used to ensure that construction materials, including mortar, concrete, stucco, cement and block, and their associated wastes do not come into contact with stormwater flows. Concrete trucks should be washed only in contained concrete washout areas so that there is no discharge of concrete waste onto site soils or into storm drains.

Non Stormwater Management

☐ *NS-3 Paving and Grinding Operations*

Stockpile management, sediment control and inlet protection BMPs should be implemented to prevent paving and grinding materials or wastes from entering storm drains. When feasible, paving during the rainy season should be avoided. Waste materials should not be washed or swept into storm drains. During saw-cutting and grinding operations, use as little water as possible. Block storm drain inlets using inlet protection BMPs and/or use absorbent materials to contain slurry. Remove saw-cut slurry, using a shovel, vacuum, or dry sweeping, as soon as possible.

X *NS-6 Illicit Discharge*

The site should be inspected before beginning the job for evidence of illicit connections to the storm drain, illegal dumping or discharges. Any pre-existing conditions should be documented and the owner notified. Employees and sub-contractors should be trained to use BMPs to prevent any material from entering storm drains.

X *NS-12 Concrete Curing, NS-13 Concrete Finishing*

Storm drain inlet protection BMPs should be implemented before conducting concrete curing and/or sandblasting. Water from curing and sandblasting operations should be directed to contained collection areas (so that there is no discharge to underlying soils or surrounding areas) and then properly disposed.

CONFORMED

FOR BIDDING PURPOSES ONLY
27-160191

County of Santa Clara – Roads and Airports Department
101 Skyport Drive, San Jose, CA 95110
(408) 573-2475 www.countyroads.org

STORMWATER POLLUTION PREVENTION BEST MANAGEMENT PRACTICES CHECKLIST FOR ALL ACTIVITIES WITHIN THE RIGHT OF WAY (ROW) ACKNOWLEDGEMENT SHEET

Introduction

The County of Santa Clara Roads and Airports Department requires applicants for encroachment permits to comply with certain General Provisions related to stormwater pollution prevention. Construction activities related to maintenance and improvement of existing utilities and installation of new utilities that disturb less than one acre of land are exempt from Encroachment Permit General Provision 16.A. but must implement best management practices (BMPs) to prevent stormwater pollution.

Permittee shall determine the appropriate BMPs to be checked below for the activities being performed within or adjacent to the County right-of-way as part of the permitted project. Additional BMPs may be required if field conditions change or additional stormwater pollution prevention measures are required by the County. For more information, please contact the Roads and Airports Department at (408) 573-2429.

Sediment Control BMPs

X *SE-5 Fiber Rolls*

A fiber roll consists of straw, coir, or other biodegradable materials bound into a tight tubular roll wrapped by netting, which can be photodegradable or natural. When fiber rolls are placed at the bottom of slopes along contours, they intercept runoff, reduce its velocity, release the runoff as sheet flow, allow sedimentation, and also reduce sheet and rill erosion until vegetation is established

X *SE-7 Street Sweeping and Vacuuming*

Sweeping and vacuuming are needed to remove sediment wherever it is tracked from the project site onto public or private paved streets and roads, typically at points of egress. After sweeping is finished, sweeper waste should be properly disposed of at an approved dumpsite.

X *SE-10 Storm Drain Inlet Protection*

Storm drain inlet protection consists of a sediment filter or an impounding area in, around or upstream of a storm drain, drop inlet, or curb inlet to prevent sediment from discharging to the storm drain. Storm drain inlet protection measures temporarily pond runoff before it enters the storm drain, allowing sediment to settle. Temporary geotextile storm drain inserts that attach underneath storm drain grates to capture and filter storm water can also be used. Inlet protection options can be used in combination with the following BMPs:

- ☐ *SE-6 Gravel Bag Berm* - A gravel bag berm is a series of gravel-filled bags placed on a level contour to intercept sheet flows, pond runoff, and allow sediment to settle out.
- ☐ *SE-8 Sandbag Barrier* - A sandbag barrier consists of a row of sand-filled bags placed on a level contour to intercept sheet flows, pond runoff, and allow sediment to settle out. Sandbag barriers should generally be used in conjunction with temporary soil stabilization.

X *TC-1 Stabilized Construction Entrance/Exit*

The purpose of a stabilized construction entrance/exit is to reduce or eliminate the tracking of sediment onto public rights of way. A stabilized construction entrance /exit is a pad of aggregate underlain with filter cloth located at a point where traffic will be entering or leaving a construction site.

CONFORMED

County of Santa Clara – Roads and Airports Department
101 Skyport Drive, San Jose, CA 95110
(408) 573-2475 www.countyroads.org

References

California Stormwater Quality Association (CASQA) Construction BMP Handbook, November 2009. (Available by subscription only at www.casqa.org)

State Water Resources Control Board, NPDES General Permit for Storm Water Discharges Associated with Construction Activity, Water Quality Order 2009-0009-DWQ, September 2009 (effective July 1, 2010).

Santa Clara Valley Urban Runoff Pollution Prevention Program, 2004 Urban Runoff Management Plan, Performance Standard and Supporting Documents for Public Streets, Roads, and Highways Operation and Maintenance, September 1, 2004.

Acknowledgement/ Agreement:

I (We), the Owner(s) of the subject property, the Utility Company, or the applicant performing work in the County Road Right of Way (ROW) have read and understood the Roads and Airports Best Management Practices Checklist for Stormwater Pollution Prevention and shall ensure that all work occurring within the County of Santa Clara ROW requires the implementation of construction Best Management Practices (BMPs) for storm water pollution prevention in conformance with either the Municipal Regional Permit (north county) or National Pollutant Discharge Elimination System Phase II Small Municipal Separate Storm Sewer System General Permit (south county).

Santa Clara Valley Water District	Judy Nam, Project Manager
Print Owner, Utility Company's Representative or Applicant Name	Owner, Utility's Representative, or Applicant Signature
Berryessa Creek at Montague Expressway Cossing, Milpitas, CA	April 14, 2016
Print Project Location Legibly	Date

CONFORMED

For Office Staff only:			
ENCROACHMENT PERMIT NO(S):			
LAND DEVELOPMENT FILE NO:			
BUILDING PLAN CHECK NO:			
RWQCB SF:	X	RWQCB Central Coast:	

FOR BIDDING PURPOSES ONLY
27-160191

CONFORMED

County of Santa Clara

Roads and Airports Department

101 Skyport Drive
San Jose, California 95110

FOR BIDDING PU... ES ONLY

27-160191

Encroachment Permit No.: 27-160191 Location: Montague Expwy crossing Berryessa Creek / S. Mipitas Blvd

Additional Special Provisions – Expressways Only

Work is subject to County Ordinance Code B-17, County Standard Specifications, County Standard Plans and Details, State of California, Department of Transportations (Caltrans) Standard Specifications and Standard Plans, latest issue.

Only boxes with are ☑ apply to this permit.

Warning signs and public safety and safe work practices:

☑ 1. Construction in road right-of-way shall be signed in accordance with the "Manual of Uniform Traffic Control Devices", 2012 Edition from State of California, Department of Transportation (Caltrans).
☑ 2. Hours of work and lane closure shall be in accordance with approved traffic control plans.
☑ 3. All construction work shall be performed in accordance with CAL O.S.H.A. Safety Orders, latest issue.

Expressway work by Permit:

☐ 1. The expressway pavement shall not be cut.
☑ 2. Allowed pavement cuts shall be sawcut, backfilled in accordance with Section 19.03 of the County Standard Specifications and paved with Type A Asphalt, ¾" coarse asphalt concrete, placed in lifts of 6", 6" and a 3" final lift (surface course) of ½" medium asphalt concrete.
☑ 3. Installation of pipes and conduits shall be by boring and jacking or direction bore methods.
☑ 4. If removal of existing fence or wall is required, it shall be replaced in kind.
☑ 5. No equipment or materials shall be stored in right-of-way overnight, unless prior written permission is obtained from the Roads and Airports Department.
☑ 6. Flagmen shall be required at any time equipment or men are crossing or working within the expressway area.
☑ 7. All landscaping removed or damaged shall be replaced in kind and approved by the County Project Inspector in the field.

Pavement damage caused by construction shall be repaired. Temporary or permanent lane realignment requiring removal of pavement stripes, markings/markers, or other construction activities causing pavement surface damage shall be repaired by use of Caltrans standard slurry seal Type 2. The placement of slurry seal, as part of the corrective repairs to a damaged roadway/lane realignment shall involve sealing the entire area. Pavement cracked/depressed by construction equipment or methods shall be removed and replaced in kind.

Notice

Indian Burial Sites: Upon discovering or unearthing any burial site as evidence by human skeletal remains or artifacts, the person making such discovery shall immediately notify the County Coroner at (408) 793-1900 and the Office of Human Relations at (408) 299-2206. No further disturbance of the site may be made except as authorized by the County Coordinator of Indian Affairs in accordance with the provisions of the state law and Chapter 2, Division B6 of the County Ordinance Code.

Underground Utilities: Notify U.S.A. Location Service at (800) 227-2600, 48 hours prior to any trenching or excavation in the road right-of-way.

Detours: For information regarding detours, contact Encroachment Permits at (408) 573 - 2475.

Material Submittals: Material Submittals are required, in accordance with the County's Standard Specifications Section 86.01.04 "Submittals", for work involving County maintained signals, lighting and electrical systems. Submittals shall be furnished to the County Roads and Airports Department's right-of-way Project Inspector. Materials furnished/installed without the Roads and Airports Department's prior approval may be subject to rejection/removal at the permittee's expense.

CONFORMED

Board of Supervisors: Mike Wasserman, Cindy Chavez, Dave Cortese, Ken Yeager, S. Joseph Simitian
County Executive: Jeffrey V. Smith

CONFORMED

EXHIBIT C

Road's Department Encroachment Permit Time Extension Fee Schedule - August 2006

Task	Current Fee	3 Months	6 Months	9 Months	12 Months
Minor Permits	N/A	25% of Original Permit Fee	50% of Original Permit Fee	75% of Original Permit Fee	100% of Original Permit Fee
Major Permits*	N/A	All previous cost must be paid before an extension can be issued	All previous cost must be paid before an extension can be issued	All previous cost must be paid before an extension can be issued	All previous cost must be paid before an extension can be issued

* The applicants would be charged actual issuance, plan check, and inspection cost incurred for these permits.

FOR BIDDING PURPOSES ONLY
27-16019

CONFORMED

CONFORMED

Appendix L

Public Entities Indemnification and INSURANCE- CONTRACTOR-Construction Risk

CONFORMED

APPENDIX L

Public Entities indemnification and

INSURANCE- CONTRACTOR-Construction Risk

Indemnity

To the extent not prohibited by applicable statute, the Contractor shall indemnify, defend and hold harmless the officers, agents, affiliates and employees of:

- Santa Clara Valley Water District (SCVWD), County of Santa Clara ,and
- Santa Clara County, including members of the Board of Supervisors of the County of Santa Clara,
- The City of Milpitas

individually and collectively, as additional insureds , (individually an "Indemnified Party" or collectively ("Indemnified Parties")) from and against any and all loss, damage, injury, liability, claim, demand, cost or expense (including, without limitation, attorney's, consultant's and expert's fees, and court costs), fine or penalty (collectively, "Loss") incurred by any person (including, without limitation, any Indemnified Party, Contractor, or any employee of Contractor or of any Indemnified Party) arising out of or in any manner connected with (i) any work performed by Contractor, or (ii) any act or omission of Contractor, its officers, agents or employees, or (iii) any breach of this Agreement by Contractor.

b. The right to indemnity under this contract shall accrue upon occurrence of the event giving rise to the Loss, and shall apply regardless of any negligence or strict liability of any Indemnified Party, except where the Loss is caused by the sole active negligence of an Indemnified Party as established by the final judgment of a court of competent jurisdiction. The sole active negligence of any Indemnified Party shall not bar the recovery of any other Indemnified Party.

c. Contractor expressly and specifically assumes potential liability for claims or actions brought by Contractor's own employees. Contractor waives any immunity it may have under worker's compensation or industrial insurance acts to indemnify the Indemnified Parties under this construction contract. Contractor acknowledges that this waiver was mutually negotiated by the parties hereto.

d. No court or jury findings in any employee's suit pursuant to any worker's compensation act or the Federal Employers' Liability Act against a party to this Agreement may be relied upon or used by Contractor in any attempt to assert liability against any Indemnified Party.

e. The provisions of the indemnity as described shall survive the completion of any work performed by Contractor or the termination or expiration of this Agreement. In no event shall these or any other provisions of this Agreement be deemed to limit any liability Contractor may have to any Indemnified Party by statute or under common law.

Insurance requirements

Please refer to the insurance requirements listed below.

Without limiting the Contractor's indemnification of, or liability to, the Indemnified Parties, the Contractor must provide and maintain at its own expense, during the term of this Agreement, or as may be further required herein, the following insurance coverages and provisions:

CONFORMED

APPENDIX L

Public Entities indemnification and

INSURANCE- CONTRACTOR-Construction Risk

Contractor must provide its insurance broker(s)/agent(s) with a copy of these requirements and warrants that these requirements have been reviewed by Contractor's insurance agent(s) and/or broker(s), who have been instructed by Contractor to procure the insurance coverage required herein.

In addition to certificates, Contractor must furnish the Contracting Officer with copies of original endorsements affecting coverage required by this Appendix. The certificates and endorsements are to be signed by a person authorized by that insurer to bind coverage on its behalf. **All endorsements and certificates are to be received and approved by the Contracting Officer before the contract commences**. In the event of a claim or dispute, the Indemnified Parties and the Contracting Officer have the right to require Contractor's insurer to provide complete, certified copies of all required pertinent insurance policies, including endorsements affecting the coverage required by this Appendix.

Contractor must, at its sole cost and expense, procure and maintain during the entire period of this Agreement the following insurance coverage(s).

Required Coverages

1. Commercial General/Business Liability Insurance with coverage as indicated:

$5,000,000 per occurrence / **$5,000,000** aggregate limits for bodily injury and property damage

$5,000,000 Products/Completed Operations aggregate (to be maintained for at least three (3) years following acceptance of the work by the Contracting Officer.

General Liability insurance must include:

a. Coverage at least as broad as found in standard ISO form CG 00 01.
b. Premises and Operations
c. Contractual Liability expressly including liability assumed under this contract.
d. Owners and Contractors' Protective liability
e. Severability of Interest
f. Explosion, Collapse and Underground Hazards, (X,C, and U)
g. Broad Form Property Damage liability
h. If the standard ISO Form wording for "OTHER INSURANCE," or other comparable wording, is not contained in Contractor's liability insurance policy, an endorsement must be provided that said insurance will be primary insurance and any insurance or self-insurance maintained by the Indemnified Parties will be in excess of Consultant's insurance and will not contribute to it.

2. Business Auto Liability Insurance with coverage as indicated:

$2,000,000 combined single limit for bodily injury and property damage per occurrence, covering all owned, non-owned and hired vehicles.

3. Builders' Risk (Course of Construction) Insurance

CONFORMED

APPENDIX L

Public Entities indemnification and

INSURANCE- CONTRACTOR-Construction Risk

Covering all risks of loss less policy exclusions for an amount equal to the completed value of the project with no coinsurance penalty provisions. Builder's Risk policy shall name the Indemnified Parties as loss payee's.

4. Workers' Compensation and Employer's Liability Insurance

Statutory California Workers' Compensation coverage covering all work to be performed for the contract.

Employer Liability coverage for not less than $1,000,000 per occurrence.

General Requirements

With respect to all coverages noted above, the following additional requirements apply:

1. **Additional Insured Endorsement(s)** Contractor must provide an additional insured endorsement for Commercial General/Business Liability and Business Automobile liability coverage naming, the Indemnified Parties, its Directors, officers, employees, and agents, individually and collectively, as additional insureds, and must provide coverage for acts, omissions, etc. arising out of the named insureds' activities and work. Other public entities may also be added to the additional insured endorsement as applicable and the Contractor will be notified of such requirement(s) by the Contracting Officer.

   (**NOTE:** Additional insured language on the Certificate of Insurance is **NOT** acceptable without a separate endorsement such as Form CG 20 10, CG 2033, CG 2037. Note: Editions dated 07/04 are not acceptable)

2. **Primacy Clause:** Contractor's insurance must be primary with respect to any other insurance which may be carried by the Indemnified Parties, and the Indemnified Parties' coverage must not be called upon to contribute or share in the loss.

3. **Cancellation Clause Revision:** The Certificate of Insurance **MUST** provide **30 days notice of cancellation, (10 days notice for non-payment of premium). NOTE: The standard wording in the ISO Certificate of Insurance is not acceptable.** The following words must be crossed out or deleted from the standard cancellation clause: "...endeavor to..." AND "...but failure to mail such notice must impose no obligation or liability of any kind upon the company, its agents or representatives."

4. **Acceptability of Insurers:** All coverages must be issued by companies admitted to conduct business in the State of California, which hold a current policy holder's alphabetic and financial size category rating of not less than A- V, according to the current Best's Key Rating Guide or a company of equal financial stability that is approved by the Contracting Officer.

5. **Self-Insured Retentions or Deductibles:** Any deductibles or self-insured retentions must be declared to and approved by the Contracting Officer. At the option of the Contracting Officer, either: the insurer shall reduce or eliminate such deductibles or self-insured retentions as respects to all insured public entities as named above, its officers, officials,

CONFORMED

employees and volunteers; or the Contractor shall provide a financial guarantee satisfactory to the Entity guaranteeing payment of losses and related investigations, claim administration, and defense expenses.

6. **Subcontractors:** Should any of the work under this Agreement be sublet, the Contractor must require each of its subcontractors of any tier to carry the aforementioned coverages, or Contractors may insure subcontractors under its own policies.

7. **Amount of Liability not Limited to Amount of Insurance:** The insurance procured by Contractor for the benefit of the Indemnified Parties must not be deemed to release or limit any liability of Contractor. Damages recoverable by the Indemnified Parties for any liability of Contractor must, in any event, not be limited by the amount of the required insurance coverage.

8. **Coverage to be Occurrence Based:** All coverage must be occurrence-based coverage. Claims-made coverage is not allowed.

9. **Waiver of Subrogation:** : Contractor agrees on to waive subrogation against any of the Indemnified Parties to the extent any loss suffered by Contractor is covered by any Commercial General Liability policy, Automobile policy, Workers' Compensation policy, or Builders' Risk policy described in Required Coverages above. Contractor agrees to advise its broker/agent/insurer about this provision and obtain any endorsements, if needed, necessary to ensure the insurer agrees.

10**.** **Non-compliance:** The Contracting Officer reserves the right to withhold payments to the Contractor in the event of material noncompliance with the insurance requirements outlined above.

11**.** **Please mail the certificates and endorsements to:**

US Army Corps Of Engineer
Contracting Division
ATTN: CECT-SPN
1455 MARKET ST., 17TH FL
San Francisco, California 94103-1398

IMPORTANT: **On the certificate of insurance, please note either the name of the project or the name of the District contact person or unit for the contract.**

If your insurance broker has any questions please advise him/her to call Mr. James Garror , Contract Specialist (415) 503-6988.

CONFORMED

Appendix

Title	Appendix
Engineering Form 4025R - Transmittal of Shop Drawings	A
Submittal Register	B
Archeological Monitoring Plan	C
EP-310-1-6a Construction Project Signs	D
Groundwater Management Plan	E
UPRR Standard Drawings	F
Historical Geotechnical Borings	G
As-Built Plans - Los Coches Street Bridge	H
As-Built Plans - Ames Avenue and Yosemite Drive Bridges	I
Channel Improvements – Construction and Maintenance Agreement	J
County of Santa Clara Encroachment Permit	K
Public Entities Indemnification and INSURANCE- CONTRACTOR-Construction Risk	L

CONFORMED

Appendix A

Engineering Form 4025R
Transmittal of Shop Drawings

CONFORMED

TRANSMITTAL OF SHOP DRAWINGS, EQUIPMENT DATA, MATERIAL SAMPLES, OR MANUFACTURER'S CERTIFICATES OF COMPLIANCE

For use of this form, see ER 415-1-10; the proponent agency is CECW-CE.

DATE	TRANSMITTAL NO.

SECTION I - REQUEST FOR APPROVAL OF THE FOLLOWING ITEMS (*This section will be initiated by the contractor*)

TO:	FROM:	CONTRACT NO.	CHECK ONE: ☐ THIS IS A NEW TRANSMITTAL ☐ THIS IS A RESUBMITTAL OF TRANSMITTAL _____

SPECIFICATION SEC. NO. (*Cover only one section with each transmittal*)	PROJECT TITLE AND LOCATION	THIS TRANSMITTAL IS FOR: (*Check one*) ☐ FIO ☐ GA ☐ DA ☐ CR ☐ DA/CR ☐ DA/GA

ITEM NO. (*See Note 3*) a.	DESCRIPTION OF SUBMITTAL ITEM (*Type size, model number/etc.*) b.	SUBMITTAL TYPE CODE (*See Note 8*) c.	NO. OF COPIES d.	CONTRACT DOCUMENT REFERENCE: SPEC. PARA. NO. e.	CONTRACT DOCUMENT REFERENCE: DRAWING SHEET NO. f.	CONTRACTOR REVIEW CODE g.	VARIATION Enter "Y" if requesting a variation (*See Note 6*) h.	USACE ACTION CODE (*Note 9*) i.

REMARKS	I certify that the above submitted items had been reviewed in detail and are correct and in strict conformance with the contract drawings and specifications except as otherwise stated.	
	NAME OF CONTRACTOR	SIGNATURE OF CONTRACTOR

SECTION II - APPROVAL ACTION

ENCLOSURES RETURNED (*List by item No.*)	NAME AND TITLE OF APPROVING AUTHORITY	SIGNATURE OF APPROVING AUTHORITY	DATE

CONFORMED

INSTRUCTIONS

1. Section I will be initiated by the Contractor in the required number of copies.

2. Each Transmittal shall be numbered consecutively. The Transmittal Number typically includes two parts separated by a dash (-). The first part is the specification section number. The second part is a sequential number for the submittals under that spec section. If the Transmittal is a resubmittal, then add a decimal point to the end of the original Transmittal Number and begin numbering the resubmittal packages sequentially after the decimal.

3. The "Item No." for each entry on this form will be the same "Item No." as indicated on ENG FORM 4288-R.

4. Submittals requiring expeditious handling will be submitted on a separate ENG Form 4025-R.

5. Items transmitted on each transmittal form will be from the same specification section. Do not combine submittal information from different specification sections in a single transmittal.

6. If the data submitted are intentionally in variance with the contract requirements, indicate a variation in column h, and enter a statement in the Remarks block describing he detailed reason for the variation.

7. ENG Form 4025-R is self-transmitting - a letter of transmittal is not required.

8. When submittal items are transmitted, indicate the "Submittal Type" (*SD-01 through SD-11*) in column c of Section I.
   Submittal types are the following:
   SD-01 - Preconstruction SD-02 - Shop Drawings SD-03 - Product Data SD-04 - Samples SD-05 - Design Data SD-06 - Test Reports
   SD-07 - Certificates SD-08 - Manufacturer's Instructions SD-09 - Manufacturer's Field Reports SD-10 - O&M Data SD-11 - Closeout

9. For each submittal item, the Contractor will assign Submittal Action Codes in column g of Section I. The U.S. Army Corps of Engineers approving authority will assign Submittal Action Codes in column i of Section I. The Submittal Action Codes are:

   A -- Approved as submitted.
   B -- Approved, except as noted on drawings. Resubmission not required.
   C -- Approved, except as noted on drawings. Refer to attached comments. Resubmission required.
   D -- Will be returned by separate correspondence.
   E -- Disapproved. Refer to attached comments.
   F -- Receipt acknowledged.
   X -- Receipt acknowledged, does not comply with contract requirements, as noted.
   G -- Other action required *(Specify)*
   K -- Government concurs with intermediate design. (*For D-B contracts*)
   R -- Design submittal is acceptable for release for construction. (*For D-B contracts*)

10. Approval of items does not relieve the contractor from complying with all the requirements of the contract.

CONFORMED

Appendix B

Submittal Register

CONFORMED

SUBMITTAL REGISTER

CONTRACT NO.

TITLE AND LOCATION
Upper Berryessa Creek

CONTRACTOR

ACTIVITY NO	TRANSMITTAL NO	SPEC SECT	DESCRIPTION ITEM SUBMITTED	PARAGRAPH #	CLASSIFICATION	GOVT OR A/E REVWR	CONTRACTOR: SCHEDULE DATES			CONTRACTOR ACTION			APPROVING AUTHORITY				MAILED TO CONTR/ DATE RCD FRM APPR AUTH
							SUBMIT	APPROVAL NEEDED BY	MATERIAL NEEDED BY	ACTION CODE	DATE OF ACTION	DATE FWD TO APPR AUTH/ DATE RCD FROM CONTR	DATE FWD TO OTHER REVIEWER	DATE RCD FROM OTH REVIEWER	ACTION CODE	DATE OF ACTION	
(a)	(b)	(c)	(d)	(e)	(f)		(g)	(h)	(i)	(j)	(k)	(l)	(m)	(n)	(o)	(p)	(q)
		01 14 00	SD-01 Preconstruction Submittals														
			List of Contact Personnel	1.2.1.1	G												
		01 16 00	SD-01 Preconstruction Submittals														
			Work Notification;	1.11.3	G												
		01 32 01.00 10	SD-01 Preconstruction Submittals														
			Project Scheduler Qualifications	1.3	G												
			Preliminary Project Schedule	3.4.1	G												
			Initial Project Schedule	3.4.2	G												
			Periodic Schedule Update	3.6.2	G												
		01 33 00	SD-01 Preconstruction Submittals														
			Submittal Register	1.7	G												
		01 35 26	SD-01 Preconstruction Submittals														
			Accident Prevention Plan (APP)	1.6	G												
			Activity Hazard Analysis (AHA)	1.7	G												
			SD-06 Test Reports														
			Notifications and Reports	1.11													
			Accident Reports	1.11.2	G												
			SD-07 Certificates														
			Confined Space Entry Permit	1.8													
			Hot work permit	1.8													
		01 45 00.00 10	SD-01 Preconstruction Submittals														
			Contractor Quality Control (CQC)	3.2	G												
			Plan														
		01 50 00	SD-01 Preconstruction Submittals														

CONTROLLED

SUBMITTAL REGISTER

CONTRACT NO.

TITLE AND LOCATION
Upper Berryessa Creek

CONTRACTOR

ACTIVITY NO	TRANSMITTAL NO	SPEC SECT	DESCRIPTION ITEM SUBMITTED	PARAGRAPH #	CLASSIFICATION	GOVT OR A/E REVWR	CONTRACTOR: SCHEDULE DATES			CONTRACTOR ACTION			APPROVING AUTHORITY				MAILED TO CONTR/ DATE RCD FRM APPR AUTH
							SUBMIT	APPROVAL NEEDED BY	MATERIAL NEEDED BY	ACTION CODE	DATE OF ACTION	DATE FWD TO APPR AUTH/ DATE RCD FROM CONTR	DATE FWD TO OTHER REVIEWER	DATE RCD FROM OTH REVIEWER	ACTION CODE	DATE OF ACTION	
(a)	(b)	(c)	(d)	(e)	(f)		(g)	(h)	(i)	(j)	(k)	(l)	(m)	(n)	(o)	(p)	(q)
		01 57 19	SD-01 Preconstruction Submittals														
			Preconstruction Survey	1.5.1	G												
			Solid Waste Management Permit	1.9	G												
			Regulatory Notifications	1.5.2	G												
			Environmental Protection Plan	1.6	G												
			Stormwater Notice of Intent	3.2.1.2	G												
			Dirt and Dust Control Plan	1.6.9.1	G												
			Employee Training Records	1.5.4	G												
			SD-06 Test Reports														
			Laboratory Analysis	1.6.6													
			Inspection Reports	3.2.1.3													
			Solid Waste Management Report	3.7.2.1	G												
			SD-07 Certificates														
			Employee Training Records	1.5.4	G												
			Erosion and Sediment Control	1.5.4													
			Inspector Qualifications														
			SD-11 Closeout Submittals														
			Stormwater Pollution Prevention	3.2.1.4	G												
			Plan Compliance Notebook														
			Stormwater Notice of Termination	3.2.1.5	G												
			Environmental Records Binder	1.8	G												
			Waste Determination	3.7.1	G												
			Documentation														
			Disposal Documentation for	3.7.3.6	G												

SUPERVISOR

SUBMITTAL REGISTER

CONTRACT NO.

TITLE AND LOCATION
Upper Berryessa Creek

CONTRACTOR

ACTIVITY NO	TRANSMITTAL NO	SPEC SECT	DESCRIPTION ITEM SUBMITTED	PARAGRAPH #	CLASSIFICATION	GOVT OR A/E REVWR	CONTRACTOR: SCHEDULE DATES			CONTRACTOR ACTION			APPROVING AUTHORITY				MAILED TO CONTR/ DATE RCD FRM APPR AUTH
							SUBMIT	APPROVAL NEEDED BY	MATERIAL NEEDED BY	ACTION CODE	DATE OF ACTION	DATE FWD TO APPR AUTH/ DATE RCD FROM CONTR	DATE FWD TO OTHER REVIEWER	DATE RCD FROM OTH REVIEWER	ACTION CODE	DATE OF ACTION	
(a)	(b)	(c)	(d)	(e)	(f)		(g)	(h)	(i)	(j)	(k)	(l)	(m)	(n)	(o)	(p)	(q)
		01 57 19	Assembled Employee Training Records	1.5.4	G												
			Solid Waste Management Permit	1.9	G												
			Solid Waste Management Report	3.7.2.1	G												
			Hazardous Waste/Debris Management	3.7.3.1	G												
			Regulatory Notifications	1.5.2	G												
			Sales Documentation	3.7.2.1	G												
			Contractor Certification	3.7.2.1													
		01 57 20.00 10	SD-01 Preconstruction Submittals														
			Environmental Protection Plan	1.9	G												
			Nesting Bird Surveys	3.10.1	G												
			Transportation Management Plan	3.6	G												
			Rain Event Action Plan	1.8	G												
			SD-06 Test Reports														
			Trees Monitoring Report	3.3.4	G												
		01 57 23	SD-01 Preconstruction Submittals														
			Storm Water Pollution Prevention Plan	1.3.2													
			Storm Water Notice of Intent	1.3.2													
			SD-06 Test Reports														
			Storm Water Inspection Reports for General Permit	1.3.2													
			Erosion and Sediment Controls	1.3													

CONTROLLED

SUBMITTAL REGISTER

CONTRACT NO.

TITLE AND LOCATION
Upper Berryessa Creek

CONTRACTOR

ACTIVITY NO	TRANSMITTAL NO	SPEC SECT	DESCRIPTION ITEM SUBMITTED	PARAGRAPH #	CLASSIFICATION	GOVT OR A/E REVWR	CONTRACTOR: SCHEDULE DATES			CONTRACTOR ACTION			APPROVING AUTHORITY				MAILED TO CONTR/ DATE RCD FRM APPR AUTH
							SUBMIT	APPROVAL NEEDED BY	MATERIAL NEEDED BY	ACTION CODE	DATE OF ACTION	DATE FWD TO APPR AUTH/ DATE RCD FROM CONTR	DATE FWD TO OTHER REVIEWER	DATE RCD FROM OTH REVIEWER	ACTION CODE	DATE OF ACTION	
(a)	(b)	(c)	(d)	(e)	(f)		(g)	(h)	(i)	(j)	(k)	(l)	(m)	(n)	(o)	(p)	(q)
		01 58 00	SD-02 Shop Drawings														
			Sign Legend Orders	1.3.1	G												
		01 78 00	SD-01 Preconstruction Submittals														
			Warranty Management Plan	1.3.1	G												
			SD-11 Closeout Submittals														
			Record Drawings	1.2.1	G												
			Operation and Maintenance	1.4	G												
			Manuals														
		02 22 13	SD-01 Preconstruction Submittals														
			Vibration Control Specialist	1.2.1	G												
			Vibration Control Specialist	1.2.1	G												
			Alternate														
			Vibration Monitoring Technician	1.2.2	G												
			Structural Inspection/Evaluation	1.2.3	G												
			Engineer														
			Vibration Control Plan	3.3	G												
			SD-06 Test Reports														
			Vibration Monitoring Report	3.5	G												
			Daily Instrument Logs	3.4	G												
			Post-Construction Structural	3.6	G												
			Survey														
		02 41 00	SD-01 Preconstruction Submittals														
			Demolition Plan	1.2.2	G												
			Existing Conditions	1.9													

CONTRACTOR

SUBMITTAL REGISTER

CONTRACT NO.

TITLE AND LOCATION
Upper Berryessa Creek

CONTRACTOR

ACTIVITY NO	TRANSMITTAL NO	SPEC SECT	DESCRIPTION ITEM SUBMITTED	PARAGRAPH #	CLASSIFICATION	GOVT OR A/E REVWR	CONTRACTOR: SCHEDULE DATES			CONTRACTOR ACTION			APPROVING AUTHORITY				MAILED TO CONTR/ DATE RCD FRM APPR AUTH
							SUBMIT	APPROVAL NEEDED BY	MATERIAL NEEDED BY	ACTION CODE	DATE OF ACTION	DATE FWD TO APPR AUTH/ DATE RCD FROM CONTR	DATE FWD TO OTHER REVIEWER	DATE RCD FROM OTH REVIEWER	ACTION CODE	DATE OF ACTION	
(a)	(b)	(c)	(d)	(e)	(f)		(g)	(h)	(i)	(j)	(k)	(l)	(m)	(n)	(o)	(p)	(q)
		03 11 13.00 10	SD-02 Shop Drawings														
			Formwork	2.2.1	G												
			Formwork	3.1.1	G												
			Form Removal Schedule	2.2.1	G												
			SD-03 Product Data														
			Form Materials	2.2													
			SD-04 Samples														
			Sample Panels	1.3	G												
			Fiber Voids	2.2.2	G												
			SD-05 Design Data														
			Calculations	2.1													
			SD-06 Test Reports														
			Inspection	3.2													
			SD-07 Certificates														
			Fiber Voids	2.2.2													
		03 15 00.00 10	SD-02 Shop Drawings														
			Waterstops	2.4	G												
			SD-03 Product Data														
			Preformed Expansion Joint Filler	2.2													
			Sealant	2.3													
			Waterstops	2.4													
			SD-04 Samples														
			Lubricant for Preformed	2.3.2													
			Compression Seals														

CONTROLLED

SUBMITTAL REGISTER

CONTRACT NO.

TITLE AND LOCATION
Upper Berryessa Creek

CONTRACTOR

ACTIVITY NO	TRANSMITTAL NO	SPEC SECT	DESCRIPTION ITEM SUBMITTED	PARAGRAPH #	CLASSIFICATION	GOVT OR A/E REVWR	CONTRACTOR: SCHEDULE DATES			CONTRACTOR ACTION			APPROVING AUTHORITY				MAILED TO CONTR/ DATE RCD FRM APPR AUTH
							SUBMIT	APPROVAL NEEDED BY	MATERIAL NEEDED BY	ACTION CODE	DATE OF ACTION	DATE FWD TO APPR AUTH/ DATE RCD FROM CONTR	DATE FWD TO OTHER REVIEWER	DATE RCD FROM OTH REVIEWER	ACTION CODE	DATE OF ACTION	
(a)	(b)	(c)	(d)	(e)	(f)		(g)	(h)	(i)	(j)	(k)	(l)	(m)	(n)	(o)	(p)	(q)
		03 15 00.00 10	Splicing Waterstops	2.5.2	G												
			SD-07 Certificates														
			Preformed Expansion Joint Filler	2.2													
			Sealant	2.3													
			Waterstops	2.4													
		03 20 00.00 10	SD-01 Preconstruction Submittals														
			Butt-Splices	3.1.3.2	G												
			SD-02 Shop Drawings														
			Reinforcement	3.1	G												
			SD-03 Product Data														
			Mechanical Butt-Splices	2.3.3	G												
			Reinforcing Steel	2.3	G												
			SD-04 Samples														
			Epoxy-Coated Bars	2.3.2													
			SD-06 Test Reports														
			Tests, Inspections, and	2.8	G												
			Verifications														
			SD-07 Certificates														
			Reinforcing Steel	2.3													
			Qualified Welders	1.3.1													
			Qualification of Steel Bar	1.3.2													
			Butt-Splicers														
		03 31 01.00 10	SD-02 Shop Drawings														
			Reinforcing steel	2.1.5	G												

SUBMITTAL REGISTER

CONTRACT NO.

TITLE AND LOCATION
Upper Berryessa Creek

CONTRACTOR

ACTIVITY NO	TRANSMITTAL NO	SPEC SECT	DESCRIPTION ITEM SUBMITTED	PARAGRAPH #	CLASSIFICATION	GOVT OR A/E REVWR	CONTRACTOR: SCHEDULE DATES			CONTRACTOR ACTION			APPROVING AUTHORITY				MAILED TO CONTR/ DATE RCD FRM APPR AUTH
							SUBMIT	APPROVAL NEEDED BY	MATERIAL NEEDED BY	ACTION CODE	DATE OF ACTION	DATE FWD TO APPR AUTH/ DATE RCD FROM CONTR	DATE FWD TO OTHER REVIEWER	DATE RCD FROM OTH REVIEWER	ACTION CODE	DATE OF ACTION	
(a)	(b)	(c)	(d)	(e)	(f)		(g)	(h)	(i)	(j)	(k)	(l)	(m)	(n)	(o)	(p)	(q)
		03 31 01.00 10	Construction Joint Treatment	3.1.4	G												
			Cold-Weather Requirements	3.2.1	G												
			Hot-Weather Requirements	3.2.2	G												
			Cementitious Materials,	1.4.2	G												
			Admixtures, and Curing														
			Compound														
			Nonshrink Grout	2.1.6													
			Mechanical Reinforcing Bar	2.1.5													
			Connectors														
			SD-06 Test Reports														
			Aggregates	2.1.2	G												
			Mill Test Reports	2.1													
			Tests and Inspections	3.3													
			Water	2.1.4													
			SD-07 Certificates														
			Concrete Field Testing	1.4													
			Technicians														
			Concrete Construction Inspector	1.4													
			(CCI)														
			Cementitious Materials	2.1.1													
			Blended Hydraulic Cement	2.1.1.6													
			SD-08 Manufacturer's Instructions														
			Curing Compound	1.4.2													
		03 35 00.00 10	SD-03 Product Data														

CONTROLLED

SUBMITTAL REGISTER

CONTRACT NO.

TITLE AND LOCATION
Upper Berryessa Creek

CONTRACTOR

ACTIVITY NO	TRANSMITTAL NO	SPEC SECT	DESCRIPTION ITEM SUBMITTED	PARAGRAPH #	CLASSIFICATION	GOVT OR A/E REVWR	CONTRACTOR: SCHEDULE DATES			CONTRACTOR ACTION			APPROVING AUTHORITY				MAILED TO CONTR/ DATE RCD FRM APPR AUTH
							SUBMIT	APPROVAL NEEDED BY	MATERIAL NEEDED BY	ACTION CODE	DATE OF ACTION	DATE FWD TO APPR AUTH/ DATE RCD FROM CONTR	DATE FWD TO OTHER REVIEWER	DATE RCD FROM OTH REVIEWER	ACTION CODE	DATE OF ACTION	
(a)	(b)	(c)	(d)	(e)	(f)		(g)	(h)	(i)	(j)	(k)	(l)	(m)	(n)	(o)	(p)	(q)
		03 39 00.00 10	SD-03 Product Data														
			Curing Materials	2.1													
			SD-06 Test Reports														
			Testing and Inspection for CQC	3.2													
			SD-08 Manufacturer's Instructions														
			Curing Compound	2.1													
		03 40 00.00 10	SD-01 Preconstruction Submittals														
			Quality Control Procedures	1.3.2.2													
			SD-02 Shop Drawings														
			Standard Precast Units	2.1.1	G												
			Custom-Made Precast Units	2.1.2	G												
			SD-03 Product Data														
			Standard Precast Units	2.1.1													
			Proprietary Precast Units	2.1.3													
			Embedded Items	3.1.3													
			Accessories	2.2.11													
			SD-05 Design Data														
			Design Calculations	2.1.2													
			Concrete Mix Proportions	2.1.5.1													
			SD-06 Test Reports														
			Test Reports	1.3.2.4													
			SD-07 Certificates														
			Quality Control Procedures	1.3.2.2													
		31 00 00	SD-01 Preconstruction Submittals														

CONTROLLED

SUBMITTAL REGISTER

CONTRACT NO.

TITLE AND LOCATION
Upper Berryessa Creek

CONTRACTOR

ACTIVITY NO	TRANSMITTAL NO	SPEC SECT	DESCRIPTION ITEM SUBMITTED	PARAGRAPH #	CLASSIFICATION	GOVT OR A/E REVWR	CONTRACTOR: SCHEDULE DATES			CONTRACTOR ACTION			APPROVING AUTHORITY				MAILED TO CONTR/	
							SUBMIT	APPROVAL NEEDED BY	MATERIAL NEEDED BY	ACTION CODE	DATE OF ACTION	DATE FWD TO APPR AUTH/ DATE RCD FROM CONTR	DATE FWD TO OTHER REVIEWER	DATE RCD FROM OTH REVIEWER	ACTION CODE	DATE OF ACTION	DATE RCD FRM APPR AUTH	
(a)	(b)	(c)	(d)	(e)	(f)		(g)	(h)	(i)	(j)	(k)	(l)	(m)	(n)	(o)	(p)	(q)	
		31 00 00	Dewatering Plan	1.5.2	G													
			Dewatering Plan	1.5.2	G													
			Groundwater Management Plan	1.5.3	G													
			SD-03 Product Data															
			Utilization of Excavated Materials	3.8	G													
			SD-06 Test Reports															
			Soil Testing Logs	3.14	G													
			Borrow Site Testing	2.1	G													
			Select Granular Material	1.4.6	G													
			SD-07 Certificates															
			Testing Laboratory	3.14	G													
		31 05 19	SD-03 Product Data															
			Thread	2.1.2														
			Manufacturing Quality Control	2.2														
			Sampling and Testing															
			SD-04 Samples															
			Quality Assurance Samples and	3.1														
			Tests															
			SD-07 Certificates															
			Geotextile	2.1.1														
		31 11 00	SD-03 Product Data															
			Nonsaleable Materials	3.6.2	G													
			SD-04 Samples															
			Tree wound paint	2.1														

CONTROLLED

SUBMITTAL REGISTER

CONTRACT NO.

TITLE AND LOCATION
Upper Berryessa Creek

CONTRACTOR

ACTIVITY NO	TRANSMITTAL NO	SPEC SECT	DESCRIPTION ITEM SUBMITTED	PARAGRAPH #	CLASSIFICATION	GOVT OR A/E REVWR	CONTRACTOR: SCHEDULE DATES			CONTRACTOR ACTION			APPROVING AUTHORITY				MAILED TO CONTR/ DATE RCD FRM APPR AUTH
							SUBMIT	APPROVAL NEEDED BY	MATERIAL NEEDED BY	ACTION CODE	DATE OF ACTION	DATE FWD TO APPR AUTH/ DATE RCD FROM CONTR	DATE FWD TO OTHER REVIEWER	DATE RCD FROM OTH REVIEWER	ACTION CODE	DATE OF ACTION	
(a)	(b)	(c)	(d)	(e)	(f)		(g)	(h)	(i)	(j)	(k)	(l)	(m)	(n)	(o)	(p)	(q)
		31 32 11	Layout	3.2.2	G												
			Obstructions Below Ground	3.2.4	G												
			Maintenance Record	3.6													
			SD-03 Product Data														
			Erosion Control Blankets Type XII	2.1.1													
			Equipment	1.1													
			Finished Grade	3.1.1													
			SD-04 Samples														
			Erosion control blankets	2.1													
			SD-06 Test Reports														
			Erosion Control Blankets	2.1													
			SD-07 Certificates														
			Installer's Qualification	1.4.1													
			SD-10 Operation and Maintenance Data														
			Maintenance Instructions	3.6.2													
			SD-11 Closeout Submittals														
			Erosion Control Blankets Type XII	2.1.1													
		32 11 23	SD-03 Product Data														
			Plant, Equipment, and Tools	2.1													
			Waybills and Delivery Tickets	1.4.5													
			SD-06 Test Reports														

CONTROLLED

SUBMITTAL REGISTER

CONTRACT NO.

TITLE AND LOCATION
Upper Berryessa Creek

CONTRACTOR

ACTIVITY NO	TRANSMITTAL NO	SPEC SECT	DESCRIPTION ITEM SUBMITTED	PARAGRAPH #	CLASSIFICATION	GOVT OR A/E REVWR	CONTRACTOR: SCHEDULE DATES			CONTRACTOR ACTION			APPROVING AUTHORITY				MAILED TO CONTR/ DATE RCD FRM APPR AUTH
							SUBMIT	APPROVAL NEEDED BY	MATERIAL NEEDED BY	ACTION CODE	DATE OF ACTION	DATE FWD TO APPR AUTH/ DATE RCD FROM CONTR	DATE FWD TO OTHER REVIEWER	DATE RCD FROM OTH REVIEWER	ACTION CODE	DATE OF ACTION	
(a)	(b)	(c)	(d)	(e)	(f)		(g)	(h)	(i)	(j)	(k)	(l)	(m)	(n)	(o)	(p)	(q)
		32 31 13	SD-02 Shop Drawings														
			Fence Assembly	1.3	G												
			Location of Gate, Corner, End,	3.16.1	G												
			and Pull Posts														
			Gate Assembly	1.3	G												
			Gate Hardware and Accessories	2.17	G												
			Erection/Installation Drawings	1.3													
			SD-03 Product Data														
			Fence Assembly	1.3	G												
			Gate Assembly	1.3	G												
			Gate Hardware and Accessories	2.17													
			PVC Coating	1.5.1	G												
			Zinc Coating	2.2	G												
			Concrete	2.20	G												
			SD-04 Samples														
			Fabric	2.3	G												
			Braces	2.19													
			Line Posts	2.5													
			Sleeves	2.7													
			Top Rail	2.8													
			Tension Wire	2.11													
			Stretcher Bars	2.12													
			Gate Posts	2.15													
			Gate Hardware and Accessories	2.17													

CONTROLLED

SUBMITTAL REGISTER

CONTRACT NO.

TITLE AND LOCATION
Upper Berryessa Creek

CONTRACTOR

ACTIVITY NO	TRANSMITTAL NO	SPEC SECT	DESCRIPTION ITEM SUBMITTED	PARAGRAPH #	CLASSIFICATION	GOVT OR A/E REVWR	CONTRACTOR: SCHEDULE DATES			CONTRACTOR ACTION			APPROVING AUTHORITY				MAILED TO CONTR/ DATE RCD FRM APPR AUTH
							SUBMIT	APPROVAL NEEDED BY	MATERIAL NEEDED BY	ACTION CODE	DATE OF ACTION	DATE FWD TO APPR AUTH/ DATE RCD FROM CONTR	DATE FWD TO OTHER REVIEWER	DATE RCD FROM OTH REVIEWER	ACTION CODE	DATE OF ACTION	
(a)	(b)	(c)	(d)	(e)	(f)		(g)	(h)	(i)	(j)	(k)	(l)	(m)	(n)	(o)	(p)	(q)
		32 31 13	SD-07 Certificates														
			Certificates of Compliance	1.5.2													
			SD-08 Manufacturer's Instructions														
			Fence Assembly	1.3													
			Gate Assembly	1.3													
			Hardware Assembly	1.3													
			Accessories	1.3													
		32 92 19	SD-03 Product Data														
			Wood cellulose fiber mulch	2.3.3													
			Fertilizer	2.2													
			SD-07 Certificates														
			seed	2.1													
			SD-08 Manufacturer's Instructions														
			Erosion Control Materials	2.5													
		33 40 00	SD-03 Product Data														
			Placing Pipe	3.3													
			Flpa Gate Check Valves		G												
			SD-04 Samples														
			Pipe for Culverts and Storm	2.1													
			Drains														
			SD-07 Certificates														
			Resin Certification	2.1.2													
			Determination of Density	3.7.5													
			Frame and Cover for Gratings	2.3.4													

SUBMITTAL REGISTER

CONTRACT NO.

TITLE AND LOCATION
Upper Berryessa Creek

CONTRACTOR

ACTIVITY NO	TRANSMITTAL NO	SPEC SECT	DESCRIPTION ITEM SUBMITTED	PARAGRAPH #	CLASSIFICATION	GOVT OR A/E REVWR	CONTRACTOR: SCHEDULE DATES			CONTRACTOR ACTION			APPROVING AUTHORITY				MAILED TO CONTR/ DATE RCD FRM APPR AUTH
							SUBMIT	APPROVAL NEEDED BY	MATERIAL NEEDED BY	ACTION CODE	DATE OF ACTION	DATE FWD TO APPR AUTH/ DATE RCD FROM CONTR	DATE FWD TO OTHER REVIEWER	DATE RCD FROM OTH REVIEWER	ACTION CODE	DATE OF ACTION	
(a)	(b)	(c)	(d)	(e)	(f)		(g)	(h)	(i)	(j)	(k)	(l)	(m)	(n)	(o)	(p)	(q)
		33 46 16	Pipe for Subdrains	2.1													
			SD-07 Certificates														
			Filter Fabric	2.2													
			Pipe for Subdrains	2.1													
		34 11 00	SD-03 Product Data														
			Wood Ties	2.8													
			Relay Rail	2.6.1.1	G												
			Joint Bars	2.3													
			Compromise Joint Bars	2.3.2													
			Miscellaneous Track Materials	2.10													
			Crossing Material or Surface	2.9.1													
			Acceptable Replacement	1.5.1	G												
			Materials														
			Traffic Maintenance and Detour	1.6.2	G												
			Plans														
			Thermite Welding Procedures	3.8	G												
			Electric Arc Welding	3.11.3													
			Materials and Samples	1.5.1													
			SD-04 Samples														
			Ballast	2.1													
			Subballast	2.2													
			SD-06 Test Reports														
			Sampling and Testing	3.10													
			Wood Ties	2.8													

CONTROLLED

SUBMITTAL REGISTER

CONTRACT NO.

TITLE AND LOCATION
Upper Berryessa Creek

CONTRACTOR

ACTIVITY NO	TRANSMITTAL NO	SPEC SECT	DESCRIPTION ITEM SUBMITTED	PARAGRAPH #	CLASSIFICATION	GOVT OR A/E REVWR	CONTRACTOR: SCHEDULE DATES			CONTRACTOR ACTION			APPROVING AUTHORITY				MAILED TO CONTR/ DATE RCD FRM APPR AUTH
							SUBMIT	APPROVAL NEEDED BY	MATERIAL NEEDED BY	ACTION CODE	DATE OF ACTION	DATE FWD TO APPR AUTH/ DATE RCD FROM CONTR	DATE FWD TO OTHER REVIEWER	DATE RCD FROM OTH REVIEWER	ACTION CODE	DATE OF ACTION	
(a)	(b)	(c)	(d)	(e)	(f)		(g)	(h)	(i)	(j)	(k)	(l)	(m)	(n)	(o)	(p)	(q)
		34 11 00	Wood Ties	2.8													
			Ballast	2.1													
			Subballast	2.2													
			Materials and Samples	1.5.1													
			SD-10 Operation and Maintenance														
			Data														
			Rail	2.6	G												
			Switches		G												
			Grade Crossings	2.9	G												
			SD-11 Closeout Submittals														
			As-Built Drawings	3.5.10	G												
		35 31 19	SD-03 Product Data														
			Riprap	3.3.3	G												
			Bedding Stone	2.2.1	G												
			Bulk Specific Gravity Test	1.3.3.1	G												
			Ready-Mixed Concrete Grout	3.4.1.1	G												
			Batching and Mixing Equipment	2.3.6	G												
			Admixtures	2.3.3	G												
			Curing Materials	2.3.4	G												
			Conveying and Placing	3.4.1.3	G												
			SD-06 Test Reports														
			Gradation Test	1.3.3	G	ED											
			Gradation Test	1.3.3.1	G	ED											
			Stone Quality Acceptance Test	1.3.3.1	G												

SUBMITTAL REGISTER

CONTRACT NO.

TITLE AND LOCATION
Upper Berryessa Creek

CONTRACTOR

ACTIVITY NO	TRANSMITTAL NO	SPEC SECT	DESCRIPTION ITEM SUBMITTED	PARAGRAPH #	CLASSIFICATION	GOVT OR A/E REVWR	CONTRACTOR: SCHEDULE DATES			CONTRACTOR ACTION			APPROVING AUTHORITY				MAILED TO CONTR/ DATE RCD FRM APPR AUTH
							SUBMIT	APPROVAL NEEDED BY	MATERIAL NEEDED BY	ACTION CODE	DATE OF ACTION	DATE FWD TO APPR AUTH/ DATE RCD FROM CONTR	DATE FWD TO OTHER REVIEWER	DATE RCD FROM OTH REVIEWER	ACTION CODE	DATE OF ACTION	
(a)	(b)	(c)	(d)	(e)	(f)		(g)	(h)	(i)	(j)	(k)	(l)	(m)	(n)	(o)	(p)	(q)
		35 31 19	SD-07 Certificates														
			Stone and Bedding Stone	3.1													
			Laboratory	1.3.2.2	G ED-G												
			Laboratory	3.3.4.2	G ED-G												
			Weigh Scale Certification	3.3.5													
			Certified Weight Scale Tickets	3.3.5													

CONTROLLED

Appendix C

Berryessa Archeological Monitoring Plan

CONFORMED

Final Archaeological Monitoring Plan for CA-SCL-593

Berryessa Creek Channel Improvements
Milpitas, California

May 25, 2016

Introduction

The Memorandum of Agreement (MOA) between the U.S. Army Corps of Engineers, San Francisco District (USACE) and the State Historic Preservation Officer (SHPO) stated that a Historic Property Treatment Plan (HPTP) was required and it shall identify procedures in the event that significant cultural material (e.g., deposit with formed artifacts, rock fire pits, dietary shell lenses) or additional Native American burials are encountered during construction. The language in the MOA and HPTP regarding monitoring during construction has been coalesced into this Archaeological Monitoring Plan (AMP), which specifies how the contractor will operate construction equipment when excavating through the archaeological site area of SCL-593. The USACE is the lead agency responsible for ensuring that the stipulations of the HPTP are understood by the contractor, followed and the results recorded.

The treatment of Native American burials and associated artifacts during the most recent archaeological work completed by Basin Research Associates was governed by a Burial Treatment Plan (BTP) and the recommended protocols presented by the Most Likely Descendent (MLD). The procedures outlined in the BTP and the MLD recommendations are repeated in this AMP and will remain as guiding documents to properly treat and remove any additional human remains exposed during construction. All documentation will be provided to the project contractor.

The Archaeological Site

Archaeological site CA-SCL-593 has incurred severe damage from the realignment of Berryessa Creek and the Union Pacific Rail Road tracks, and yet there are remnants of cultural deposits that yielded information important to prehistory, and also human burials that have survived and become exposed in the open channel. Agency-sponsored archaeological excavations sampled the deposits to obtain information in accordance with the HPTP to resolve the adverse effects from the proposed project. The boundaries of SCl-593 are based on the Phase 1 archaeological investigations prepared by Basin Research Associates in October 2015. The Phase I results showed that the site burial data, cultural constituents, and radiocarbon dates provided information to answer some of the research questions in the HPTP. The archaeological studies demonstrated a consistent low-density of shell and stone and very few features, therefore it is reasonable to expect that the archaeological deposits to be damaged by channel work will continue to produce the same type of information. No further controlled archaeological investigations are therefore warranted. It is nonetheless prudent to monitor the channel excavations to verify the findings and also to recover archaeological materials of research value that may not have been revealed earlier.

CONFORMED

General Requirements

The construction project will require the services of a professional and experienced archaeologist that meets the Secretary of the Interior's Standards for archaeology to implement this AMP during project construction. The archaeologist will be the principle monitor, who shall be present on-site when any construction activities will occur within and adjacent to the mapped boundaries of the archaeological site SCL-593. During project mobilization and prior to commencing construction, the archaeologist shall meet with the construction crew to clarify the monitoring protocol and to review the potential range of archaeological work that will be needed for various finds.

The archaeologist shall provide training to construction personnel covering both identification of archaeological resources expected within the SCL-593 boundaries. This preconstruction training session will be held before the beginning of construction. All training sessions will be conducted in person and in English. Construction personnel will be briefed on the purpose for archaeological monitoring and the basic identification of archaeological resources, and the proper discovery protocols to be followed in the event of an archaeological discovery during construction.

The archaeologist will be responsible for making in-field evaluations of archaeological features, and in consultation with the USACE reach agreement on the disposition of the finds and estimated time to complete removal based upon pre-arranged templates. The emphasis is to recover new information that contributes to the site's archaeological value if it is unearthed. The recovery of encountered archaeological features may require studies and/or testing of samples or artifacts by outside experts or consultants.

The recordation and removal of features by the archaeologist will require additional archaeologists to assist, which will ensure that an archaeologist is available when construction resumes under the monitoring plan. Specific procedures are described below to adequately recover information before removal of recorded features, to set reasonable timeframes for the work and to suggest how the contractor's operations will accommodate these situations. In addition, the discovery of Native American burials during equipment operations will be governed by the BTP and recommendations of the MLD, and the removal of such will be managed by the archaeologist with assistance from others.

Native American Consultation

A Native American consultant listed with the Native American Heritage Commission shall support the archaeological monitoring program. The Native American shall be on-site at the commencement of construction work at SCL-593 to consult with the principal archaeologist, attend training/meetings for construction crews, and observe the initial monitoring operations.

Archeological Discovery Protocols and Impacts to Construction Schedule

CONFORMED

The contractor's channel excavations and associated earth-disturbing activities within the boundaries of archaeological site SCL-593 shall be performed only when the archaeologist is present to monitor the work and in accordance with the stipulations on equipment operation and excavation methods. The ways in which the channel widening and deepening will be accomplished through the site must be specialized. For example, the thickness of bucket or blade cuts is reduced, and thus a smaller areal exposure for the monitoring archaeologist to see and inspect. Also, the archaeologist will occasionally want to "pause" equipment to get a closer at soils for evidence of an archaeological feature, without lengthy delays. The contractor will therefore have a lower production rate compared to the straightforward channel work elsewhere. This specialized approach will be limited initially to a trial period of 2 to 3 work days, and the results reviewed by USACE to decide whether to continue with the specialized plan.

Of importance is that the monitoring shall be conducted in a controlled fashion. The contractor is advised that if archaeological finds are made during monitoring at site SCL-593, the archaeologist will have the authority to temporarily suspend or restrict work in order to implement the evaluation and removal actions, and the work will commence only when the proper protocols are met and the contractor is informed to resume work. The contractor's work in other portions of the project area (outside the boundaries of site SCl-593) shall be subjected to periodic inspections by the archaeologist. This will require coordination for site access, but not hinder the contractor's operations.

Under the direction of the archaeologist, the contractor shall immediately stop work within 50 feet of the location of any discovery of archaeological features. Archaeological features include but are not limited to (a) concentrations of prehistoric artifacts such as chipped stone arrow or spear projectile, and ground stone tools such as stone mortars and pestles, (b) deposits of ash-stained soils ("midden") from daily living activities, and (c) concentrations of fire-altered rock and/or burned or charred organic materials from hearths. Following any work stoppage and during the archaeological actions to remove the finds, equipment may continue operations at other locations outside the 50-foot discovery area under the supervision of the monitoring archaeologist.

The duration of work stoppage at the discovery site shall be sufficient to allow the monitoring archaeologist to conduct an evaluation of the significance of the find and to receive verbal authorization from USACE to remove the feature. It is estimated that 48 hours from discovery would be sufficient time to complete this step. The estimated duration of recording and removing features would range from 48 to 72 hours. Per the MOA, a "significant" archaeological find would require review and consultation with the SHPO, and would add an additional 48 hours.

Human Burial Discoveries

Pursuant to the requirements of the State of California Public Resources Code Section 5097.94 and the Health and Safety Code Section 7050.5, upon discovering or unearthing any

CONFORMED

burial site as evidenced by human skeletal remains, the archaeologist shall immediately notify the Santa Clara County Coroner. The contractor shall immediately secure the site and protect any human remains from further disturbance, and will no conduct additional excavation or disturbance of the finds within a 50-foot radius. Upon determination by the County Coroner that the remains are Native American, the Coroner will contact the Native American Heritage Commission. Because human remains connected to site CA-SCL-593 have been uncovered and removed in consultation with the current MLD, Mr. Andrew Galvan, this established process will likely continue for all future uncovered human remains from SCL-593. The Burial Treatment Plan and recommendations of the MLD previously approved and implemented will be adhered to.

The contractor will be advised that if burials are encountered, the same suspend-work provisions described above will be invoked. In addition, the USACE will arrange access to burial site locations by permission from the Santa Clara Valley Water District and other landowners depending on the exact location, and the contractor will be bound by provisions of any real estate permit or easement conditions.

Report of Monitoring Results and Disposition of Cultural Materials

The monitoring results, the outcome of archaeological studies, and removal of features shall be documented in a field survey report, including a description of work, findings, and appropriate maps and photos. All information regarding cultural resources including site locations, Native American human remains, and associated funerary objects will be kept confidential and will not be made available for public disclosure. The written report will be submitted to the USACE who shall coordinate with the SHPO as needed.

Final disposition of all collected archaeological materials shall be documented in the field report. Long-term storage of the archaeological collections shall be housed at the facility nearest to the discovery locale that conforms to Federal guidelines for curation of archaeological collections (36 CFR 79).

All authored reports by the consulting archaeologist shall be prepared in draft form for review by USACE and Native American consultants. The final report along with updated standard California records (DPR 523 series) shall be filed at the Northwest Information Center, California Historical Resources Information System.

CONFORMED

Appendix D

EP-310-1-6a-16

Construction Project Signs

CONFORMED

The use of signs to identify Corps managed or supervised design, construction, and rehabilitation projects - both for military and civil works - is an important part of efforts to keep the public informed of Corps work. For this purpose, a construction project sign package has been adopted. This package consists of two signs: one for project identification and the other to show on-the-job safety performance of the contractor.

These two signs are to be displayed side by side and mounted for reading by passing viewers. Exact placement location will be designated by the contracting officer's representative.

The panel sizes and graphic formats have been standardized for visual consistency throughout all Corps operations.

Panels are fabricated using HDO plywood or aluminum with dimensional lumber uprights and bracing. The sign faces are nonreflective vinyl.

All legends are to be die-cut or computer-cut in the sizes and typefaces specified and applied to the white panel background following the graphic formats shown on pages 16-2 and 16-3. The Communication Red panel on the left side of the construction project sign with Corps Signature (reverse version) is screen-printed onto the white background.

A display of these two signs is shown on the following two pages. Mounting and fabrication details are provided on page 16-4.

Special applications or situations not covered in these guidelines should be referred to the district Sign Program Manager.

CONFORMED

Construction Project Identification Sign

Below are two samples of the Construction Project Identification sign showing how this panel is adaptable for use to identify either military (top) or civil works projects (bottom). The graphic format for this 4'x 6' sign panel follows the legend guidelines and layout as specified below. The large 4'x 4' section of the panel on the right is to be white with black legend. The 2'x 4' section of the sign on the left with the full Corps Signature (reverse version) is to be screen-printed Communication Red on the white background The designation of a sponsor in the area indicated is optional with Military or Civil Works construction signs. Signs may list one sponsoring entity. If agreement on a sponsor designation cannot be achieved, the area should be left blank.

This sign is to be placed with the Safety Performance sign shown on the following page. Mounting and fabrication details are provided on page 16-4.

Special applications or situations not covered in these guidelines should be referred to the district Sign Program Manager.

Legend Group 1: One- to two-line description of Corps relationship to project.
Color: White
Typeface: 1.25" Helvetica Regular
Maximum line length: 19"

Legend Group 2: Division or District Name (optional). Placed below 10.5" reverse Signature (6" Castle).
Color: White
Typeface: 1.25" Helvetica Regular

Legend Group 2a: One- to three-line identification of Military or Civil Works sponsor (optional). Place below Corps Signature to cross-align with Group 5a-b.
Color: White
Typeface: 1.25" Helvetica Regular
Maximum line length: 19"

Legend Group 3: One- to three-line project title legend describes the work being done under this contract.
Color: Black
Typeface: 3" Helvetica Bold
Maximum line length: 42"

Legend Group 4: One- to two-line identification of project or facility (civil works) or name of sponsoring department (military).
Color: Black
Typeface: 1.5" Helvetica Regular
Maximum line length: 42"

Cross-align the first line of Legend Group 4 with the first line of the Corps Signature (US Army Corps) as shown.

Legend Groups 5a-b: One- to five-line identification of prime contractors including: type (architect, general contractor, etc.), corporate or firm name, city, state. Use of Legend Group 5 is optional.
Color: Black
Typeface: 1.25" Helvetica Regular
Maximum line length: 21"

All typography is flush left and rag right, upper and lower case with initial capitals only as shown. Letter- and word-spacing to follow Corps standards as specified in Appendix D.

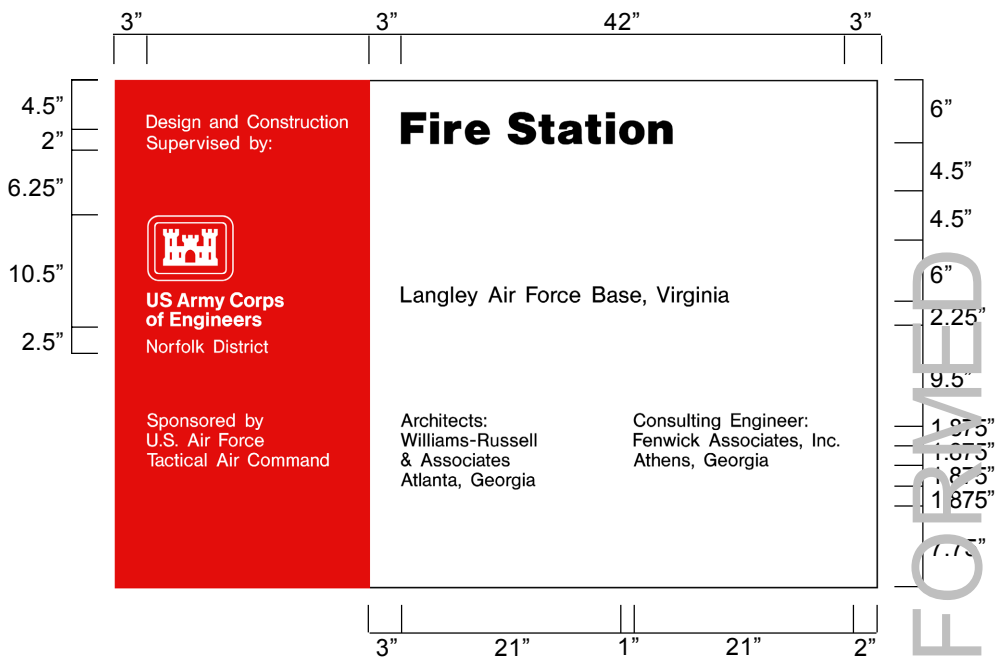

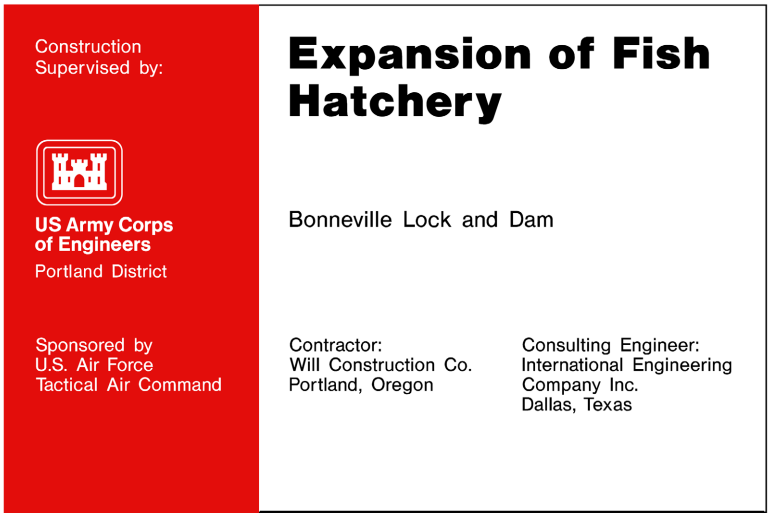

Sign Type	Legend Size (A)	Panel Size	Post Size	Specification Code	Mounting Height	Color Bkg/Lgd
CID-01	various	4'x6'	4"x4"	HDO-3	48"	WH-RD/BK

CONFORMED

Each contractor's safety record is to be posted on Corps managed or supervised construction projects and mounted with the Construction Project Identification sign specified on page 16-2.

The graphic format, color, size and typefaces used on the sign are to be reproduced exactly as specified below. The title with First Aid logo in the top section of the sign, and the performance record captions are standard for all signs of this type. Legend groups 2 and 3 below identify the project and the contractor and are to be placed on the sign as shown.

Safety record numbers are mounted on individual metal plates and are screw-mounted to the background to allow for daily revisions to posted safety performance record.

Special applications or situations not covered in these guidelines should be referred to the district Sign Program Manager.

Legend Group 1: Standard two-line title "Safety is a Job Requirement" with 8" (outside diameter) Safety Green first aid logo.
Color: To match Pantone system 347
Typeface: 3" Helvetica Bold
Color: Black

Legend Group 2: One- to two-line project title legend describes the work being done under this contract and name of host project.
Color: Black
Typeface: 1.5" Helvetica Regular
Maximum line length: 42"

Legend Group 3: One- to two-line identification: name of prime contractor and city, state address. Color: Black
Typeface: 1.5" Helvetica Regular
Maximum line length: 42"

Legend Group 4: Standard safety record captions as shown.
Color: Black
Typeface: 1.25" Helvetica Regular

Replaceable numbers are to be mounted on white .060 aluminum plates and screw-mounted to background.
Color: Black
Typeface: 3" Helvetica Regular
Plate size: 2.5" x 4.5"

All typography is flush left and rag right, upper and lower case with initial capitals only as shown. Letter- and word-spacing to follow Corps standards as specified in Appendix D.

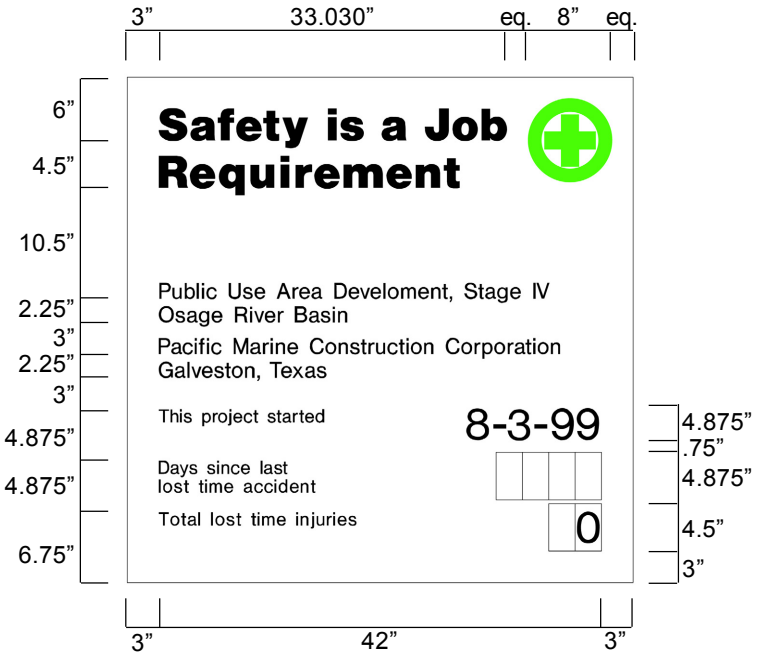

Sign Type	Legend Size (A)	Panel Size	Post Size	Specification Code	Mounting Height	Color Bkg/Lgd
CID-02	various	4'x4'	4"x4"	HDO-3	48"	WH/BK-SG

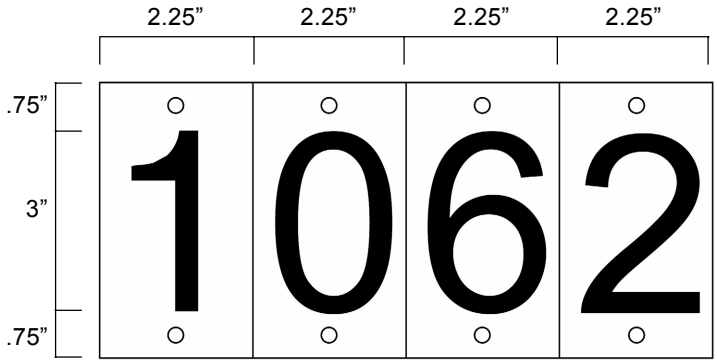

CONFORMED

Fabrication and Mounting Guidelines

All Construction Project Identification signs and Safety Performance signs are to be fabricated and installed as described below. The signs are to be erected at a location designated by the contracting officer representative and shall conform to the size, format, and typographic standards shown on pages16-2 and 16-3. Detailed specifications for HDO plywood panel preparation are provided in Appendix B.

Shown below the mounting diagram is a panel layout grid with spaces provided for project information. Photocopy this page and use as a worksheet when preparing sign legend orders.

For additional information on the proper method to prepare sign panel graphics, contact the district Sign Program Manager.

The sign panels are to be fabricated from .75" High Density Overlay Plywood. Panel preparation to follow HDO specifications provided in Appendix B.

Sign graphics to be prepared on a white nonreflective vinyl film with positionable adhesive backing.

All graphics except for the Communication Red background with Corps Signature on the project sign are to be die-cut or computer-cut nonreflective vinyl, prespaced legends prepared in the sizes and typefaces specified and applied to the background panel following the graphic formats shown on pages 16-2 and 16-3.

The 2'x 4' Communication Red panel (to match Pantone system 032) with full Corps Signature (reverse version) is to be screen-printed on the white background. Identification of the district or division may be applied under the signature with white cut vinyl letters prepared to Corps standards.

Drill and insert six (6) .375" T-nuts from the front face of the HDO sign panel. Position holes as shown. Flange of T-nut to be flush with sign face.

Apply graphic panel to prepared HDO plywood panel following manufacturers' instructions.

Sign uprights to be structural grade 4" x 4" treated Douglas Fir or Southern Yellow Pine, No.1 or better. Post to be 12' long. Drill six (6) .375" mounting holes in uprights to align with T-nuts in sign panel. Countersink (.5") back of hole to accept socket head cap screw (4" x .375").

Assemble sign panel and uprights. Imbed assembled sign panel and uprights in 4' hole. Local soil conditions and/or wind loading may require bolting additional 2" x 4" struts on inside face of uprights to reinforce installation as shown.

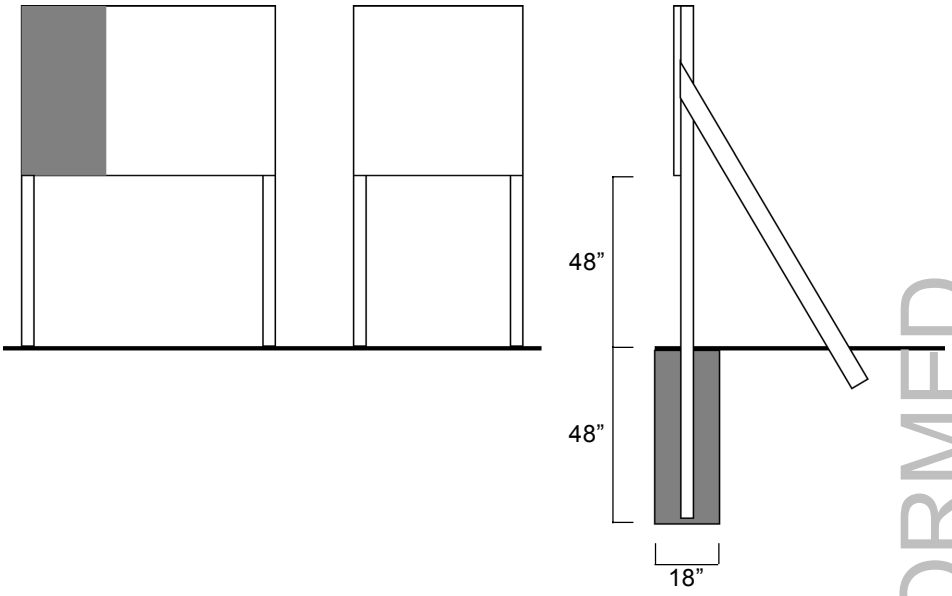

Construction Project Identification Sign
Legend Group 1: Corps Relationship

1. _____
2. _____

Legend Group 2: Division/District Name

1. _____
2. _____

Legend Group 2a: Military/Civil Works Sponsor

1. _____
2. _____

Legend Group 3: Project Title

1. _____
2. _____
3. _____

Legend Group 4: Facility Name

1. _____
2. _____

Legend Group 5: Contractor/A&E

1. _____
2. _____
3. _____
4. _____
5. _____

Legend Group 5b: Contractor/A&E

1. _____
2. _____
3. _____
4. _____
5. _____

Safety Performance Sign
Legend Group 2: Project Title

1. _____
2. _____

Legend Group 3: Contractor/A&E

1. _____
2. _____

CONFORMED

Appendix E

Groundwater Management Plan

CONFORMED

GROUNDWATER MANAGEMENT PLAN

UPPER BERRYESSA CREEK FLOOD RISK MANAGEMENT PROJECT
JONES CHEMICAL INC. PLUME AREA
MILPITAS, SANTA CLARA COUNTY, CALIFORNIA

Prepared for:

Santa Clara Valley Water District
5750 Almaden Expressway
San Jose, CA 95118-3686

Prepared by:

Tetra Tech, Inc.
17885 Von Karman Avenue, Suite 500
Irvine, California 92614-6213

March 10, 2016

CONFORMED

[This page intentionally left blank]

CONFORMED

TABLE OF CONTENTS

1.0 INTRODUCTION **1**

2.0 SUMMARY OF GROUNDWATER CONDITIONS **1**

2.1 AREA OF INTEREST BOUNDARIES 1
2.2 PROJECT AREA HYDROGEOLOGY 1
2.3 CONTAMINANTS 2

3.0 BERRYESSA CREEK WIDENING PLANS **2**

3.1 CONSTRUCTION METHODOLOGY 2
3.2 IMPORT AND DISPOSAL 3
3.3 CONSTRUCTION EQUIPMENT AND WORKERS 3

4.0 PERMITTING EVALUATION **3**

5.0 DIVERSION AND CONTROL OF AOI GROUNDWATER **4**

5.1 COFFERDAM 4
5.2 GROUNDWATER WELLS 5
5.2.1 Well Spacing and Expected Pumping Volume 5
5.2.2 Typical Dewatering Well Construction Details 5

6.0 GROUNDWATER TREATMENT AND CONVEYANCE EQUIPMENT **6**

7.0 COMPLIANCE MONITORING **7**

7.1 COMPLIANCE SAMPLING 7
7.1.1 Compliance Sampling: Day 1 of Operation 7
7.1.2 Compliance Sampling: Day 5 of Operation 8
7.1.3 Discharge Monitoring 8
7.2 MEDIA BREAKTHROUGH MONITORING 9

8.0 MEDIA CHANGE-OUT PROCEDURES **9**

8.1 HAZARDOUS WASTE DISPOSAL SITE 10

9.0 REPORTING **10**

10.0 DEMOBILIZATION **11**

11.0 HEALTH AND SAFETY OVERVIEW **11**

12.0 REFERENCES **12**

CONFORMED

LIST OF TABLES

Table 1 Volatile Organic Compound in Area of Interest Groundwater
Table 2 Extracted Groundwater Sampling Requirements
Table 3 Groundwater Treatment Standards
Table 4 Hazardous Thresholds for Granular Activated Carbon

LIST OF FIGURES

Figure 1 JCI Shallow Groundwater Plume
Figure 2 Area of Interest
Figure 3 Proposed Project Typical Sections
Figure 4 Approximate Location of Shallow Groundwater Extraction Wells in AOI
Figure 5 Process Flow Schematic

LIST OF ATTACHMENTS

Attachment A SFBRWQCB Non-Enforcement Letter dated August 14, 2015
Attachment B Photograph of Typical Temporary Groundwater Treatment Plant
Attachment C Typical Specifications for a 100 Gallons Per Minute Temporary Groundwater Treatment Plant
Attachment D Typical Specifications for 700 Gallons Per Minute Temporary Groundwater Treatment Plant

CONFORMED

ABBREVIATIONS AND ACRONYMNS

AOI	Area of Interest
bgs	below ground surface
DCA	dichloroethane
DCE	dichloroethene
DDR	Design Documentation Report
EPA	Environmental Protection Agency
ESL	Environmental Screening Levels
FEMA	Federal Emergency Management Agency
GAC	granular activated carbon
gpm	gallons per minute
GWMP	Groundwater Management Plan
HASP	Health and Safety Plan
HAZWOPER	Hazardous Waste Operations and Emergency Response
JCI	Jones Chemical, Inc.
JSAs	Job Safety Analyses
MCL	maximum contaminant level
ND	not detected
NPDES	National Pollutant Discharge Elimination System
PCE	Tetrachloroethylene
PVC	Polyvinyl chloride
RCRA	Resource Conservation and Recovery Act
SFBRWQCB	San Francisco Bay Regional Water Quality Control Board
TCE	Trichloroethylene
TCLP	Toxicity Characteristic Leaching Procedure
TDS	total dissolved solids
UPRR	Union Pacific Railroad
USACE	United States Army Corps of Engineers
VC	vinyl chloride
VOC	volatile organic compound
µg/L	micrograms per liter

CONFORMED

[This page intentionally left blank]

CONFORMED

1.0 INTRODUCTION

This Groundwater Management Plan (GWMP) has been prepared to guide field activities within the Jones Chemical, Inc. (JCI) groundwater plume during implementation of the Berryessa Creek Flood Risk Management Project (the Project). This GWMP will be implemented by the Construction Contractor as part of the Project that is being managed by the United States Army Corps of Engineers. In general, the GWMP defines the conceptual approach for the extraction, conveyance, and treatment of groundwater within the Area of Interest (AOI) that is bound by the intersection of the Project and the JCI groundwater plume (see Figures 1 and 2). This GWMP does not apply to any work performed outside the AOI and will only be utilized if groundwater is encountered by the Construction Contractor while performing work within the AOI.

2.0 SUMMARY OF GROUNDWATER CONDITIONS

This section summarizes the AOI boundaries, Project area hydrogeology, and the conditions associated with the JCI groundwater plume.

2.1 Area of Interest Boundaries

The AOI is bound by the Project boundaries and the JCI groundwater plume. As shown on Figure 2, the dimensions of the AOI where channel construction will take place are approximately 70 feet wide by approximately 1000 feet long, or approximately from Station 155+00 to Station 165+00 on the construction plan sheets The sequencing of work within the AOI will be at the discretion of the Construction Contractor. However, for the purposes of this GWMP, it is assumed that the Construction Contractor will perform work in 300-foot sections, excavating and backfilling each 300-foot section before progressing to the next section. It will take approximately 2-4 weeks to complete the work within the AOI.

2.2 Project Area Hydrogeology

The Project area is underlain by interbedded alluvial sediments composed of sand, gravel, silt, and clay. The uppermost 5 to 10 feet of the subsurface consists of fill material, which is clay, gravely clay, sand, and gravel. Sediments underlying the fill material predominantly consist of clay, silty clay, and sandy clay, with variable amounts of sand and gravel. The clays encountered in soil borings contain intervals of sand ranging in thickness from several inches to approximately 11 feet. Historically, the depth to groundwater within the AOI has ranged between approximately 7 to 20 feet below ground surface (Tetra Tech, 2015a, and http://geotracker.waterboards.ca.gov/profile_report.asp?global_id=SL18213593).

Tetra Tech drilled a soil boring in the AOI in December 2014 (Tetra Tech, 2015a); a saturated zone was encountered from 15.5 feet bgs to 19 feet below ground surface (bgs), returning to slightly moist soil conditions from 19 feet to 20 feet bgs. Upon removal of the drilling rods, the groundwater level rose to 13 feet below grade in the boring.

Historical groundwater elevation data collected at and near the project area indicate groundwater flows generally toward the west-northwest.

CONFORMED

2.3 Contaminants

The groundwater beneath the AOI is impacted by volatile organic compounds (VOCs), attributed to the 1982 chlorinated solvent spill at the former JCI Facility. The following VOCs have recently been detected in shallow groundwater within the AOI at concentrations exceeding maximum contaminant levels (MCLs): tetrachloroethylene (PCE), trichloroethylene (TCE), trans–1,2-dichloroethene (t-1,2-DCE), cis-1,2-DCE, 1,1-dichloroethane (1,1-DCA), 1,1-DCE, and vinyl chloride (VC). The Semiannual Groundwater Monitoring Reports dated February 27, 2015 (Arcadis, 2015a) and August 31, 2015 (Arcadis, 2015b) for the former JCI facility indicate that VOCs were detected during these two reporting periods in JCI groundwater monitoring wells B14, B15, B19, B58, and B59 (the JCI groundwater monitoring wells that are closest to the AOI) at concentrations that ranged from not detected above the laboratory reporting limit (ND) to 1,400 micrograms per liter (ug/L) as shown on Figure 1. These data are summarized and compared to the pertinent MCL and San Francisco Bay Regional Water Quality Control Board (SFBRWQCB) Environmental Screening Levels (ESL) in Table 1 in the Tables Section following the report narrative.

3.0 BERRYESSA CREEK WIDENING PLANS

Upper Berryessa Creek will be redesigned to provide flood damage reduction benefits from the overpass of I-680 to the upstream side of Calaveras Boulevard. The increased flood protection will include Widening to add capacity and bank protection to provide channel stability.

The major features of the project in the AOI include widening the creek channel, installing a concrete box culvert to replace an existing railroad trestle, and expanding or surfacing existing access roads with aggregate paving. Figure 3 shows the following features:

- The channel banks would be excavated with 2H:1V channel sideslopes.
- Buried rock revetment would be placed for scour protection from the toe of bank to between the 2.5-year and 10-year flood elevation, with the installation of biodegradable erosion control blankets and vegetation between the top of the rock revetment and the top of the bank
- The existing Union Pacific Railroad (UPRR) trestle bridge would be replaced with a double-barreled box culvert, with Concrete, warped wingwall transition structures upstream and downstream of the newly-constructed UPRR trestle.
- Two aggregate-paved maintenance roads, 18 feet wide and 15 feet wide will be located on the right and left banks looking downstream, respectively, within this area.

As shown in the profile on Figure 3, proposed excavation typically ranges from 1-3 feet below the current channel bottom and approximately 12-13 feet below ground surface (bgs) at areas proposed for widening of the channel. In the AOI, borings conducted in 2014 found saturated soils approximately 15-20 feet bgs. Results from 2014 monitoring well data for this location yielded an average depth to groundwater of 12.1 feet bgs.

3.1 Construction Methodology

The main construction components listed below are provided in roughly the sequence in which they would occur, although several of the components may occur concurrently. In addition to these construction components, the railroad trestle bridge that is within the AOI will be replaced. This replacement includes

CONFORMED

removal of the existing bridge and placing a prefabricated concrete box culvert upon which UPRR will replace the track.

- Utility relocations
- Clearing and grubbing
- Excavation with dewatering as required
- Placement and compaction of fill
- Placement of geotextile fabric
- Importing and placement of rock revetment
- Placement of biodegradable turf reinforcement mats
- Plantings as required
- Placement of aggregate base on the access roadways

3.2 Import and Disposal

Soil, reinforcing steel, vegetation, and concrete will be excavated during construction. Some of the clean excavated soils will be reused on-site. Vegetation will be composted, steel and concrete debris will be recycled, and the balance of the materials will be disposed of at one or more approved landfills.

3.3 Construction Equipment and Workers

The following equipment is anticipated to be used during Project implementation within the AOI:

- Backhoes
- Bulldozers
- Cranes
- Compactors
- Concrete trucks
- Graders
- Excavators
- Jackhammers
- Dump trucks/haul trucks
- Loaders
- Pumps
- Scrapers

Construction will either occur over two dry seasons from May to October, or continuously for one year. Construction hours will generally be during normal business hours, but after-hours work may be needed for concrete pours or replacement of the existing UPRR trestle with a concrete box culvert. The types of construction equipment in use and the number of workers actively working at the project area will vary depending on the phase of construction. The number of workers present on any given day is estimated at 25 in general, and up to 40 on occasion.

CONFORMED

4.0 PERMITTING EVALUATION

A Notice of Intent will not be submitted to obtain coverage for managing groundwater associated with the AOI under the National Pollutant Discharge Elimination System (NPDES) general permit. As a result of not obtaining this permit, the SFBRWQCB has required the preparation and submittal of this GWMP which provides the methods and procedures for controlling and diverting groundwater, if necessary, while working within the AOI, as identified in their August 14, 2015 non-enforcement letter and included in Attachment A.

Prior to discharge, the AOI groundwater will be treated to meet the standards set forth in the NPDES General Permit No. CAG912002 (NPDES Permit) for fuel and VOC impacted sites under the requirements of SFBRWQCB Order No. R2-2012-0012 (SFBRWQCB, 2015).

If dewatering wells are installed to lower the water table (see Section 5.0), the Construction Contractor will obtain all appropriate permits which can include permits and/or authorization from the Santa Clara Valley Water District to install and abandon the wells.

5.0 DIVERSION AND CONTROL OF AOI GROUNDWATER

Depending on field conditions at the time of Project implementation, it may be necessary to control and divert groundwater to achieve the Project objectives and comply with Project requirements including excavation, placement of material, and soil compaction. As is the case throughout the Project reach, the Construction Contractor will determine whether groundwater control and diversion is necessary in order to, for example, lower the groundwater level at the start of construction or limit water seepage into the construction zone during construction.

This GWMP applies only to work within the AOI. In addition to this GWMP, all work within the AOI shall be performed in accordance with the Project Rain Event Action Plan, design drawings, specifications, and permits.

If the Construction Contractor (1) determines that groundwater will be exposed and/or encountered within the AOI, or (2) if groundwater is exposed and/or encountered within the Project AOI during construction, the Construction Contractor will control and collect the groundwater, prior to treatment and discharge, by selecting and implementing one or a combination of the following methods. Both are considered acceptable. The Contractor's selection will consider the observation of field conditions, effectiveness of the methods, and relative time and cost.

- Constructing cofferdams at the downgradient end of the AOI or sections of the AOI that are under construction; and/or
- Installing and operating dewatering wells.

5.1 Cofferdam

If the Construction Contractor opts to design, construct, and utilize a cofferdam for groundwater control and diversion, the Construction Contractor will grade the AOI to direct groundwater flow to the cofferdam where the groundwater will be temporarily stored until it is pumped to the groundwater treatment equipment that is described in Section 6.0. If groundwater is too evenly spread across the surface to be effectively pumped to the treatment system, the Construction Contractor may decide to provide interim grading to one location and/or implement a small basin or sump from which to pump. The size of both the cofferdam and any sump that may be required, as well as the period of time that the cofferdam is required to contain water, is dependent on the field conditions at the time of construction.

In accordance with SFBRWQCB guidelines, the Construction Contractor shall submit to the Project Engineer for review, a cofferdam design that, at a minimum, identifies the following:

- Construction material
- Height of structure(s)
- How the area will be dewatered
- Overtopping precautions such that overtopping will not occur, and

CONFORMED

- Discharge locations and structures

The treated groundwater will be discharged downstream in Berryessa creek.

5.2 Groundwater Wells

Alternatively, the Construction Contractor may opt to install and operate shallow dewatering wells to lower the water table prior to commencing work within the AOI. Dewatering contractors with extensive San Francisco Bay experience estimated that dewatering groundwater in the project area will require approximately 20 groundwater extraction wells on 50-foot centers to lower the shallow groundwater table.[1] The exact spacing of the dewatering wells may vary based on the amount of groundwater encountered during construction. The extraction wells, if installed, will be located along the west side of Berryessa Creek as shown on Figure 4. The extracted water will be pumped above ground to the treatment plant that is described in Section 6.0 prior to subsequent discharge.

5.2.1 Well Spacing and Expected Pumping Volume

The dewatering wells, if installed, are anticipated to initially operate at approximately 40 gallons per minute (gpm) each. Once the water column in each well and the gravel pack around each well are dewatered, the sustainable extraction rate will likely decrease to a sustainable rate of approximately 5 gpm per well.

Assuming that 20 wells will be installed along the 980-foot length of the AOI, the combined extraction rates are anticipated to range between100 and 800 gpm. Alternatively, the Construction Contractor may opt to dewater one section (see Section 2.1) at a time, in which case the flow rate is expected to range between 30 and 240 gpm.

5.2.2 Typical Dewatering Well Construction Details

The extraction wells, if needed, will be approximately 40 feet deep, screened from 10 to 40 feet below ground surface and will be constructed of six-inch schedule 40 polyvinyl chloride (PVC).[2] The 30-foot length screened interval is anticipated to provide sufficient drawdown for the water elevations that may be encountered during construction. Each well will be equipped with a dedicated, variable-rate pump; the extracted water will be pumped above ground to the treatment plant that is described in Section 6.0 prior to subsequent discharge. The wells shall be powered by a single, portable, trailered diesel-powered generator.

The trailered diesel-powered generator shall be installed on the Project overbank to avoid potential risks associated with rain events and any external fuel tanks will also be placed on the Project overbank. The Construction Contractor shall take necessary precautions that any wiring, conduit, or pipe connecting the generator(s) to the wells shall not be damaged by construction vehicles.

CONFORMED

[1] January 17, 2015 telephone conversation between Adam Medina, Viking Drillers, Inc. and Keith Hoofard, Tetra Tech

[2] Depth based on conversations with experienced personnel as referenced in footnote #1 on this page.

6.0 GROUNDWATER TREATMENT AND CONVEYANCE EQUIPMENT

A temporary treatment plant will treat groundwater that becomes exposed and, therefore, subsequently collected per Section 5, above.

As shown on Figure 4, the temporary groundwater treatment plant can be located within the channel, adjacent to the AOI, and effectively isolated from any nuisance flow within the channel, if necessary, through the use of berms, K-rails, or other features at the Construction Contractor's discretion. The Contractor shall provide ramp access as part of the overall construction effort. These ramps shall be available for access to the temporary groundwater treatment plant. As an alternative to the in-channel location of the treatment equipment, at the Contractor's discretion, the equipment can also be located along the top of the channel as long as it does not interfere with construction activities.

A process flow schematic is provided as Figure 5. Groundwater will be pumped from the cofferdam or dewatering wells to the open-top equalization tank to allow sediments to settle out of the groundwater. From the equalization tank, the groundwater will be pumped through a *filtration train* that includes sand filtration and organoclay filtration vessels. These will provide a "polish" to the sediment removal to prevent blockage prior to being pumped through the *treatment train* which will remove VOCs by adsorption within the granular activated carbon (GAC) vessels. The treated water will then flow to a second open-top batch tank for temporary storage (as needed) and to allow a controlled discharge rate to Berryessa Creek. The point of discharge will be at the outlet of the open-top batch tank.

The Construction Contractor shall have sufficient cranes, forklifts, trucks, and personnel onsite while working within the AOI to remove all equipment associated with the temporary groundwater treatment plant within 24 hours of notification of a pending rain event. Typical specifications for a 100 gallon per minute temporary treatment system and a 700 gallon per minute treatment system are provided as Attachments C and D, respectively.[1]

As shown on Figure 5, compliance-sampling ports will be located:

- after the final filter and before the first GAC vessel (INF-001);
- between the two GAC vessels (MID-001); and
- after the second GAC vessel, before mixing with any other water (EFF-001).

The treatment plant and extraction wells will be powered by portable diesel generators. The treatment plant and dewatering system may have to operate 24 hours per day, depending on treatment requirements dictated by the amount of groundwater flow at the time of construction. A photograph of a typical temporary groundwater treatment plant is provided as Attachment B for illustrative purposes. Note that the temporary groundwater treatment system that will likely be needed for the Project will be a smaller scale system compared to that shown in Attachment B.

CONFORMED

[1] NOTE: All equipment brands depicted herein shall be considered as "typical" and are provided for reference purposes, with "or equivalent" applicable to all equipment.

7.0 COMPLIANCE MONITORING

This section presents procedures for sampling the treated groundwater. The analytical results of the treatment system samples will be reported to the SFBRWQCB as described in Section 9.0.

7.1 Compliance Sampling

Compliance sampling will be performed on the first and fifth days of operation, and will consist of collecting groundwater samples from sampling port INF-001 (see Figure 5) and EFF-001 (see Figure 5) in accordance with Table E-2 of the SFBRWQCB Order; the pertinent information from this table is reproduced in Table 2 in the Tables Section following the report narrative.

7.1.1 Compliance Sampling: Day 1 of Operation

The objective of sampling the influent and effluent groundwater on the first day of operation is to confirm compliance with the discharge standards. Groundwater from the AOI shall not be discharged to Berryessa Creek until compliance with the discharge standards is demonstrated. Thus, the treated groundwater will be discharged to a holding tank for temporary storage to prevent discharge to Berryessa Creek until compliance with the discharge standards is demonstrated as described in the following sections. Furthermore, the groundwater control, diversion, and the Construction Contractor may opt to shut down dewatering activities until compliance is demonstrated to reduce the amount of storage needed. If the system is shut down for more than 120 hours, the compliance sampling shall be repeated. System shutdown to reduce the amount of storage needed shall only occur if no consequences to construction activities within the AOI nor seepage downstream will occur due to a high accumulation of groundwater exposure as a result of the shutdown. If these consequences may occur, then additional storage facilities must be made available to preclude untreated groundwater from migrating downstream.

An influent groundwater sample shall be collected from sampling port INF-001 (see Figure 5) on the first day of operation. This influent groundwater sample shall be monitored in the field for pH and submitted to a state-certified laboratory for analysis of VOCs by Environmental Protection Agency (EPA) Method 8260B.

An effluent groundwater sample shall be collected from sampling port EFF-001 (see Figure 5) on the first day of operation. This effluent groundwater sample shall be monitored in the field for turbidity, pH, temperature, and electrical conductivity and submitted to a state-certified laboratory for analysis of: VOCs by EPA Method 8260B and total dissolved solids (TDS) by SM 2540.

The laboratory analytical results from the startup groundwater samples collected on the first day of operation shall be compared to the effluent concentrations identified in Table 2 of the Order (Column B: Discharge to Other Surface Water Areas), which is reproduced in Table 3 in the Tables Section following the report narrative.

If all of the effluent analytical results are less than the maximum daily effluent limitations listed above, the treated groundwater shall be deemed to be in compliance, and discharge of the treated water to Berryessa Creek may commence. If any of the effluent analytical results exceed the maximum daily effluent limitations listed above, discharge of the treated groundwater shall not be allowed and startup sampling shall be repeated until compliance is demonstrated. At the Construction Contractor's discretion it may be appropriate to replace the GAC to achieve compliance with the discharge standards.

CONFORMED

7.1.2 Compliance Sampling: Day 5 of Operation

In accordance with the SFBRWQCB Order, the INF-001 and EFF-001 will be sampled on the fifth day of operation. An influent groundwater sample shall be collected from sample port INF-001, and monitored in the field for pH and submitted to a state-certified laboratory for analysis of VOCs by EPA Method 8260B.

An effluent groundwater sample shall be collected from sample port EFF-001, monitored in the field for turbidity, pH, temperature, and electrical conductivity, and submitted to a state-certified laboratory for analysis of:

- VOCs, EPA 8260B
- 1,4-dioxane, EPA 8270C
- total dissolved solids, SM 2540
- total (unfiltered) metals:
    - antimony, EPA 204.2 reporting limit 0.5 ug/L
    - arsenic, EPA 206.3 reporting limit 2.0 ug/L
    - beryllium, GFAA or ICPMS reporting limit 0.5 ug/L
    - cadmium, GFAA or ICPMS reporting limit 0.25 ug/L
    - hexavalent and total chromium, SM 3500 reporting limit 0.5 ug/L
    - copper, EPA 200.9 reporting limit 0.5 ug/L
    - cyanide, SM 4500-CN C or I reporting limit 1 ug/L
    - lead, EPA 200.9 reporting limit 0.5 ug/L
    - mercury, EPA 1631 reporting limit 0.002 ug/L
    - nickel, EPA 249.2 reporting limit 1 ug/L
    - selenium, SM 3114B or C reporting limit 0.5 ug/L
    - silver, EPA 272.2 reporting limit 0.25 ug/L
    - thallium, EPA 279.2 reporting limit 1 ug/L
    - zinc, EPA 200.8 reporting limit 1 ug/L

7.1.3 Discharge Monitoring

In accordance with the SFBRWQCB Order, the effluent discharge to Berryessa Creek will be monitored daily to verify that the discharge is not causing the following:

- Floating, suspended, or deposited macroscopic particulate matter or foam;
- Bottom deposits or aquatic growths to the extent that such deposits or growths cause nuisance or adversely affect beneficial uses;
- Alteration of temperature, turbidity, or apparent color beyond present natural background levels;
- Visible, floating, suspended, or deposited oil or other products of petroleum origin; and
- Toxic or other deleterious substances to be present in concentrations or quantities that will cause deleterious effects on aquatic biota, wildlife, or waterfowl, or which render any of these unfit for human consumption either at levels created in the receiving waters or as a result of biological concentration.

CONFORMED

Additionally, standard observations for the groundwater treatment system will be recorded on each day and will include observations of: odor, weather condition (wind direction and estimated velocity), deposits, discolorations, and/or plugging in the treatment system, and operation of the float and/or pressure shutoff valves to prevent system overflow. Any non-compliance with RWQCB standards for discharge will be rectified prior to continuation of treatment/discharge operations.

7.2 Media Breakthrough Monitoring

The GAC vessels shall be sampled a minimum of weekly to monitor for potential breakthrough. A sample will be collected from sample port MID-001 weekly and analyzed for VOCs by EPA Method 8260B to monitor for potential GAC breakthrough. If VOCs are detected in the MID-001 sample at concentrations that exceed the maximum daily effluent limitations identified in Table 4 in the Tables Section following the report narrative (Column B: Discharge to Other Surface Water Areas) of the SFBRWQCB Order, another sample will be immediately collected and analyzed to confirm the breakthrough. If breakthrough is confirmed, the GAC in the lead vessel will be replaced (see Section 3.0), the original lag vessel will become the lead vessel, and the newly replaced GAC will become the lag vessel.

8.0 MEDIA CHANGE-OUT PROCEDURES

The treatment system will be shut down to replace the spent GAC in the lead vessel. The need to stop the groundwater diversion or extraction during the GAC change-out will be evaluated based on the following: the current available volume to store diverted/extracted water in the equalization tank and the GAC Contractor's time estimate to remove the spent GAC and emplace the new GAC. The above ground extraction water piping will be reconfigured so the former second GAC vessel (lag vessel) becomes the lead vessel and the vessel with the replaced GAC becomes the lag vessel (second in the series).

The GAC Contractor will remove the GAC from the lead vessel after the water has been drained from the vessel. The Contractor will remove the GAC using a vacuum hose, containerize the spent material, and fill the vessel with new GAC. The spent GAC will be profiled for disposal by submitting a sample for analysis of total VOCs and for the Toxicity Characteristic Leaching Procedure (TCLP) for VOCs. The GAC Contractor will remove the spent GAC from the project area and regenerate and/or dispose of the spent GAC appropriately, depending upon whether the profile results exceed hazardous waste thresholds. (Reuse of the GAC would be up to the GAC Contractor but in no instance would it be reused at the Project site.) Hazardous waste thresholds for the chemicals of concern associated with the AOI are presented in Table 4 in the Tables Section following the report narrative.

The EPA regulations establish two ways of identifying solid wastes as hazardous under the Resource Conservation and Recovery Act (RCRA). A waste may be considered hazardous if it exhibits certain hazardous properties ("characteristics") or if it is included on a specific list of wastes EPA has determined are hazardous ("listing" a waste as hazardous) because EPA found the characteristics to pose substantial present or potential hazards to human health or the environment. EPA defines four hazardous waste characteristic properties: ignitability, corrosivity, reactivity, or toxicity. A waste is ignitable if it is:

- a liquid with a flash point of less than 140 degrees F using an approved flash point test,
- a non-liquid that can readily catch fire under standard temperature and pressure, and burns vigorously after ignition so as to create a hazard, and
- is an ignitable compressed gas or a Department of Transportation oxidizer.

CONFORMED

A waste is corrosive if it is:

- an aqueous waste with a pH of less than or equal to 2 or greater than or equal to 12.5, and
- a waste that can corrode steel at a rate of ¼ inch or more per year.

A material is a reactive hazardous waste if it is normally unstable, reacts violently with water, generates toxic gas if exposed to water or corrosive materials, or is capable of detonation if exposed to heat or flame.

A waste is determined to be hazardous based on the toxicity characteristic if a sample of the waste is subject to the TCLP for VOCs at a state-certified analytical laboratory and the results exceed the TCLP limits.

There are four different lists of hazardous wastes (40CFR 261), which are:

- **The F list (non-specific source wastes) –** contains waste from non-specific sources. This list includes solvents commonly used in degreasing, metal treatment baths and sludges, wastewaters from metal plating operations, and dioxin containing chemicals and their precursors.
- **The K list (source-specific wastes) –** designates particular solid wastes from certain specific industries. This listing includes descriptions that are very specific and clear such as wood preservation, pigment production, chemical production, petroleum refining, iron and steel production, explosive manufacturing, and pesticide manufacturing.
- **The P list and the U list (discarded commercial chemical products) –** contain discarded commercial products, off-spec chemicals, contain residues, and residues from chemical spills. The main differences between the two lists are the quantities of chemicals regulated.

It is the generator's responsibility to determine if the waste is a listed waste. The EPA defines a generator as "any person, by site, whose act or process produces hazardous waste identified or listed in part 261 of Title 40 of the Code of Federal Regulations (CFR)".

8.1 Hazardous Waste Disposal Site

Hazardous and non-hazardous waste will be disposed of in accordance with federal, state, and local regulations; the disposal facility will be selected by the contractor, subject to client approval.

CONFORMED

9.0 REPORTING

Any non-compliance releases and spills that may endanger health or the environment must be reported to the National Response Center (NRC)[1] as well as the SFBRWQCB, the Project Engineer, and the Santa Clara Valley Water District within 24 hours of becoming aware of the circumstance. A written submission of the non-compliance, if any, shall be uploaded to GeoTracker within five days of becoming aware of the circumstance.

All analytical results from the AOI will be submitted to the SFBRWQCB within 24 hours of receipt and uploaded to GeoTracker within five days.

[1] The NRC is the sole federal point of contact for reporting all hazardous substance spills and releases, including the VOCs found in the AOI. See their website for more information (http://www.nrc.uscg.mil/nrcrpttxt.htm. See also the reportable quantities promulgated by 40 CFR Part 302.4 and found in Table 302.4 of the following website: https://www.gpo.gov/fdsys/pkg/CFR-2011-title40-vol28/pdf/CFR-2011-title40-vol28-sec302-4.pdf

10.0 DEMOBILIZATION

The Construction Contractor will prepare a Rain Action Event Plan (REAP) meeting guidelines of the California Stormwater Quality Association best management practices for construction activities. The REAP will include detailed directions for removing equipment and materials from the channel if substantial rain is forecast. As noted in Section 6.0, the Construction Contractor shall have sufficient cranes, forklifts, trucks, and personnel onsite while working within the AOI to remove all equipment associated with the temporary groundwater treatment plant within 24 hours of notification of a pending rain event.

Prior to removing the treatment equipment from the Site, The sand filter media, organoclay from the organoclay filter, bag-filter sediment, and GAC from both the lead and lag vessels shall be sampled and analyzed by a state-certified laboratory for total VOCs and TCLP for VOCs for profiling purposes, as required prior to disposal at receiving facilities. The waste classification shall be determined based on the laboratory analytical results federal, state, and local regulations as described in Section 8.0. Hazardous waste thresholds for the chemicals of concern associated with the AOI are presented in Table 4.

Following the waste classification, the sand filter media, organoclay from the organoclay filter, bag-filter sediment, and GAC shall be removed from the respective vessels and transported offsite for lawful disposal. The GAC will be removed and either (1) regenerated and reused, or (2) disposed of off-site, depending whether the profiling results exceed hazardous waste thresholds.

Once the media have been removed, the piping of the components of the portable treatment plant will be disconnected and the individual components will be removed from the site using cranes, forklifts, and/or trucks, as appropriate. The aboveground components of the groundwater conveyance system and the connections to the portable treatment system will be reused by the Construction Contractor or disposed of as inert waste.

As mentioned in Section 4.0, if dewatering wells are installed to lower the water table as discussed in Section 5.0, the Construction Contractor will obtain all appropriate permits which can include permits and/or authorization from the Santa Clara Valley Water District for abandonment of the wells.

CONFORMED

11.0 HEALTH AND SAFETY OVERVIEW

The dewatering contractor and the contractor performing the groundwater extraction and treatment system operation and monitoring will be required to be Hazardous Waste Operations and Emergency Response (HAZWOPER) trained (40-hour training with 8-hour annual updates), in compliance with 29 CFR 1910.120. The contractors are required to prepare their own Health and Safety Plan (HASP) with Job Safety Analyses (JSAs) for each task. At a minimum, the HASP will identify the following:

- Key personnel, general safety guidelines and protocols
- Job hazards
- Training requirements
- Personal protective equipment and engineering controls
- Exposure monitoring plan
- Emergency first aid and decontamination procedures
- Standard operating procedures

12.0 REFERENCES

Arcadis, 2015a. *Semiannual Groundwater Monitoring Report, August 1, 2014 through January 31, 2015, Former JCI Jones Chemical Facility, 985 Montague Expressway, Milpitas, California.* February 27, 2015.

Arcadis, 2015b. Semiannual Groundwater Monitoring Report, February 1, 2015 through July 31, 2015, Former JCI Jones Chemical Facility, 985 Montague Expressway, Milpitas, California. August 31, 2015.

SFBRWQCB, 2015. Letter from Bruce Wolfe to Amanda Cruz. *Berryessa Creek Channel Modification Project, adjacent to the former JCI Jones Chemical Facility, 985 Montague Expressway, Milpitas, Santa Clara County.* August 14, 2015.

Tetra Tech, 2015a. HTRW Soil Sampling Report Including Two Groundwater Grab Samples, Upper Berryessa Creek Flood Risk Management Project Between Montague Expressway and Yosemite Drive, Santa Clara County, Milpitas, California.

Tetra Tech, 2015b. Geotechnical Appendix. Upper Berryessa Creek Flood Risk Management Project I-680 to Calaveras Boulevard Santa Clara County, Milpitas, California. November 24, 2015.

CONFORMED

TABLES

CONFORMED

Table 1
Volatile Organic Compound in Area of Interest Groundwater
Berryessa Creek Widening Project Groundwater Management Plan

Constituent	December 2014 & June 2015 Concentration Range (µg/L)	MCL (µg/L)	ESL (µg/L)
Tetrachloroethylene	2.6 – 1,400	5	5
Trichloroethylene	0.6 – 86	5	5
Trans-1,2-dichloroethylene	0.6 – 16	10	10
Cis-1,2-dichloroethylene	<0.5 – 110	6	6
1,1-dichloroethane	<0.5 – 13	5	5
1,1-dichlorethene	<0.5 – 29	6	6
Vinyl Chloride	0.3 – 3.4	0.5	0.5

Notes:
ESL = Environmental Screening Levels
MCL = Maximum Containment Level
SFBRWQCB = San Francisco Bay Regional Water Quality Control Board
µg/L = micrograms per liter

CONFORMED

Table 2
Extracted Groundwater Sampling Requirements
Berryessa Creek Widening Project Groundwater Management Plan

	Influent (INF-001)						Effluent (EFF-001)						
Parameter	**1st day**	**5th day**	**Monthly**	**Quarterly**	**Semiannually**	**Annually**	**1st day**	**5th day**	**Monthly**	**Quarterly**	**Semiannually**	**Annually**	**Once every 3 yrs**
Discharge Flow (gpm)							continuous	continuous	continuous	continuous	continuous	continuous	continuous
Fish Toxicity 96-hr % survival										x (1st yr)		x (after 1st yr)	
Standard Observations	x	x	x				x	x	x				
VOCs	x	x			x		x	x	x				
1,4-Dioxane								x			x		
Turbidity							x	x		x		x (after 1st yr)	
pH	x	x	x (1st yr)	x (2nd yr)		x (after 2nd yr)	x	x	x (1st yr)	x (2nd yr)		x (after 2nd yr)	
Total dissolved solids							x	x	x				
temperature							x	x	x (1st yr)	x (2nd yr)		x (after 2nd yr)	
Electrical conductivity							x	x	x (1st yr)	x (2nd yr)		x (after 2nd yr)	
Metals								x					x
Discharge Flow Volume									X				

Notes:
Standard Observation for Groundwater Treatment Systems include: odor; weather condition (wind direction and estimated velocity); deposits, discolorations, and/or plugging in the treatment system; operation of the float and/or pressure shutoff valves to prevent system overflow

CONFORMED

Table 3
Groundwater Treatment Standards
Berryessa Creek Widening Project Groundwater Management Plan

Compound	CAS Number	Discharge to Other Surface Water Areas	
		Average Monthly Effluent Limitation (µg/L)	Maximum Daily Effluent Limitation (µg/L)
Benzene	71432	---	5
Carbon Tetrachloride	56235	4.4	5
Chloroform	67663	---	5
1,1-Dichloroethane	75343	---	5
1,2-Dichloroethane	107062	---	5
1,1-Dichloroethylene	75354	3.2	5
Ethylbenzene	100414	---	5
Methylene Chloride	75092	---	5
Tetrachloroethylene (PCE)	127184	---	5
Toluene	108883	---	5
Cis 1,2-Dichloroethylene	156592	---	5
Trans 1,2- Dichloroethylene	156605	---	5
1,1,1-Trichloroethane	71556	---	5
1,1,2-Trichloroethane	79005	---	5
Trichloroethylene (TCE)	79016	---	5
Vinyl Chloride	75014	---	1
Total Xylenes	1330207	---	5
Methyl Tertiary Butyl Ether (MTBE)	1634044	---	5
Total Petroleum Hydrocarbons [TPHs (as gasoline or as diesel)]	---	---	50
Ethylene Dibromide (1,2-Dibromoethane)	106934	---	5
Trichloro- trifluoroethane	76131	---	5
Total Chlorine Residual	---	---	0.0[1]

Notes:
µg/L = micrograms per liter

[1] = There shall be no detectable levels of residual chlorine in the effluent (a non-detect result using a detection level equal or less than 0.08 milligram per liter (mg/L) will not be deemed to be out of compliance). This limit only applies to Dischargers that chlorinate their extracted groundwater.

CONFORMED

Table 4
Hazardous Thresholds for Granular Activated Carbon
Berryessa Creek Widening Project Groundwater Management Plan

Volatile Organic Compound	Regulatory Level (mg/L)
Benzene	0.5
Carbon Tetrachloride	0.5
Chlorobenzene	100
Chloroform	6.0
1,4-Dichlorobenzene	7.5
1,2-Dichloroethane	0.5
1,1-Dichloroethylene	0.7
Tetrachloroethylene	0.7
Trichloroethylene	0.5
Vinyl Chloride	0.2

Notes:
mg/L = milligram per liter

CONFORMED

[This page intentionally left blank]

CONFORMED

FIGURES

CONFORMED

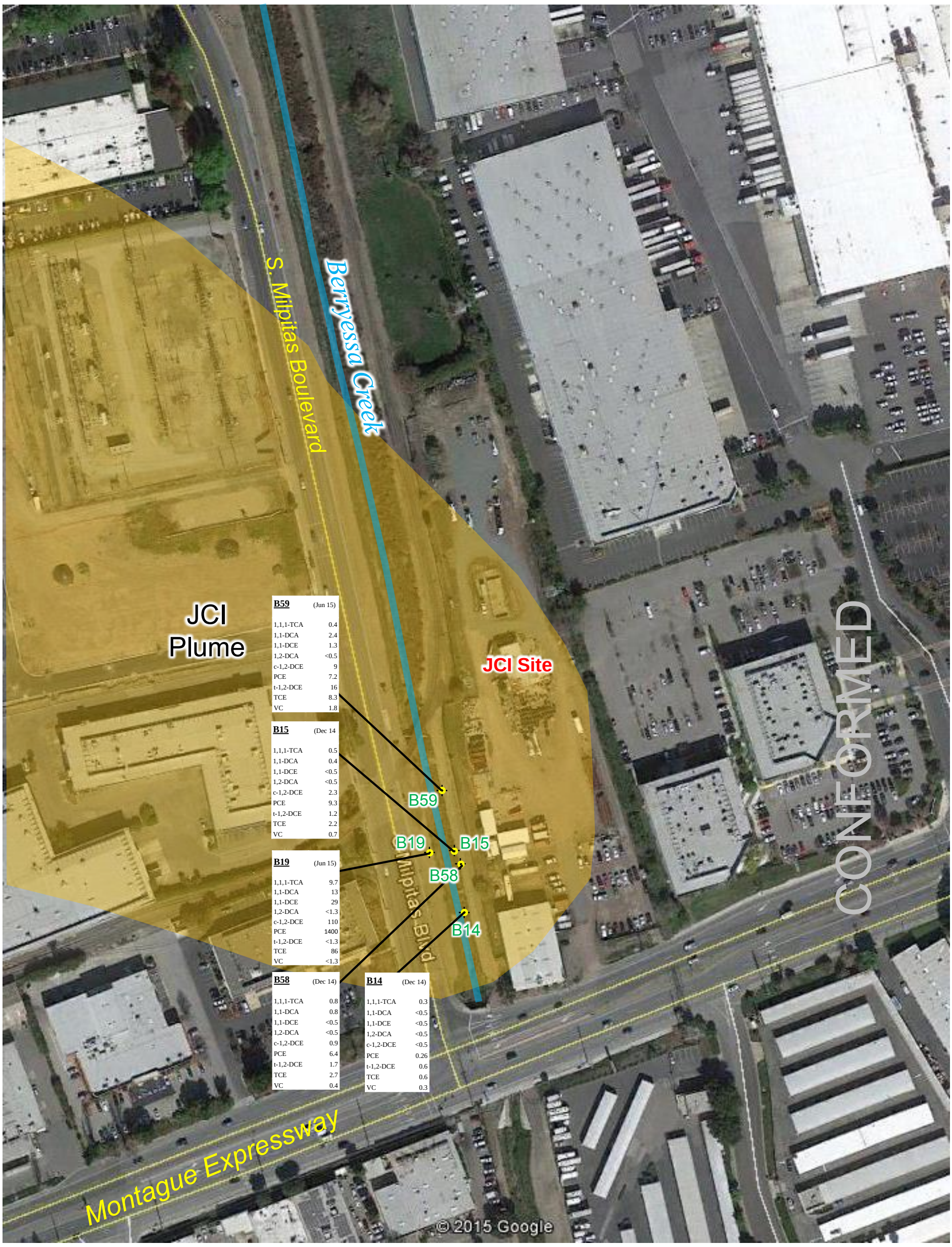

SOURCE: ***Google Earth Pro, February 23, 2014.***

B19 JCI shallow well (screened <40 feet bgs)

Approximate extent of JCI VOC Groundwater Plume

Location ID — **B14** (Dec 14) — Sample Date
Analyte — PCE 0.26 — Concentration (µg/L)

N

0 feet 150

Abbreviations:

1,1,1-TCA	1,1,1-Trichloroethane
1,1-DCA	1,1-Dichloroethane
1,1-DCE	1,1-Dichloroethene
1,2-DCA	1,2-Dichloroethane
c-1,2-DCE	cis-1,2-Dichloroethene
PCE	Tetrachloroethene
t-1,2-DCE	trans-1,2 Dichloroethene
TCE	Trichloroethene
VC	Vinyl Chloride

TITLE: **JCI Shallow Groundwater Plume**

LOCATION: **Upper Berryessa Creek FRMP**
Between Montague Expressway and Yosemite Drive
Milpitas, California

TETRA TECH

CHECKED:	IA	FIGURE:
DRAFTED:	KDH	1
FILE:	100-SWW-T31331	
DATE:	10-15-15	

URCE: *Google Earth Pro, February 23, 2014.*

N

0 feet 75

Area of Interest

Approximate extent of JCI VOC Groundwater Plume

TITLE:	**Area of Interest**
LOCATION:	**Upper Berryessa Creek FRMP** **Between Montague Expressway and Yosemite Drive** **Milpitas, California**

TETRA TECH

CHECKED:	IA	**FIGURE:**
DRAFTED:	KDH	**2**
FILE:	100-SWW-T31331	
DATE:	10-15-15	

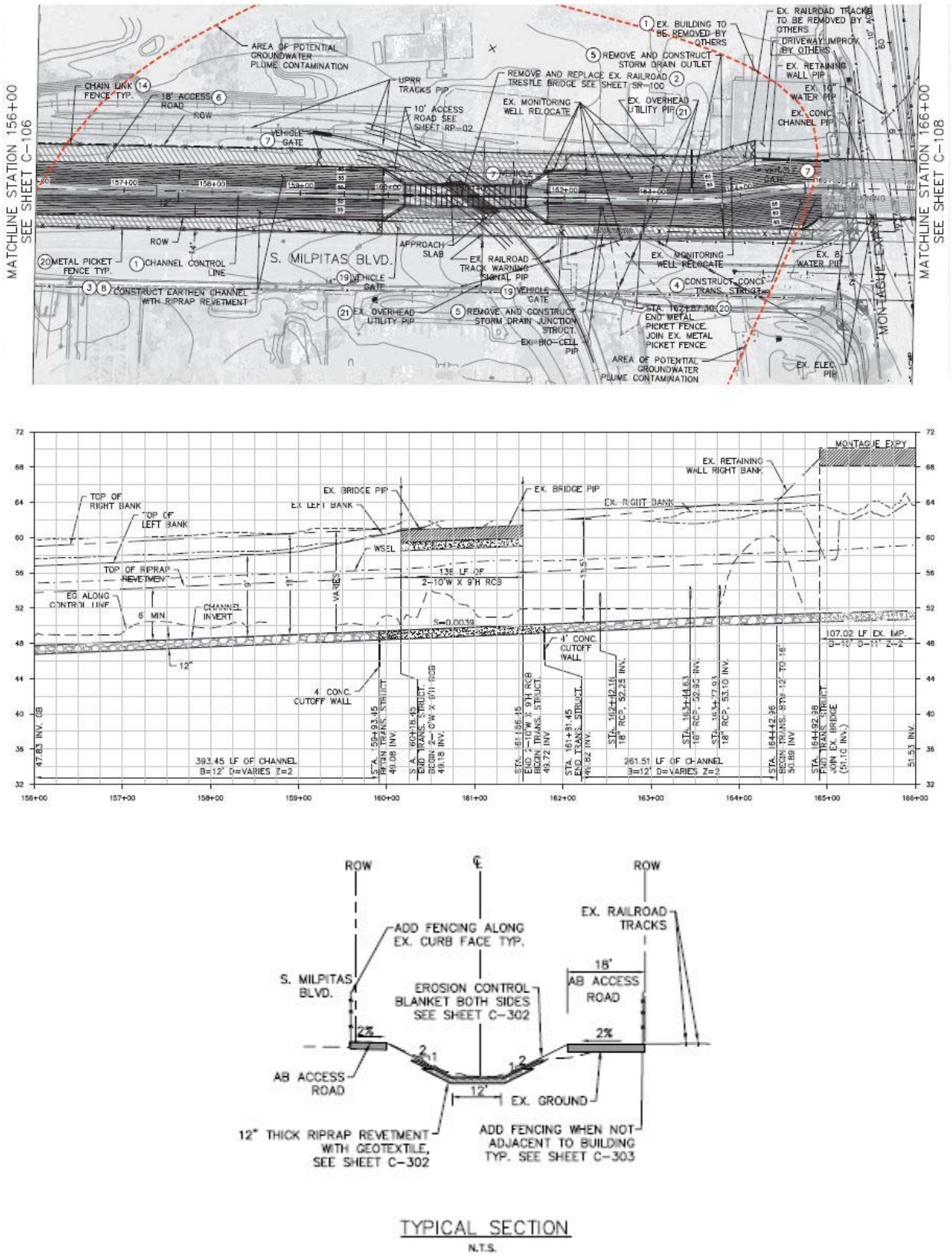

FIGURE 3. Proposed Project Construction Plans and Cross Section in the AOI

CONFORMED

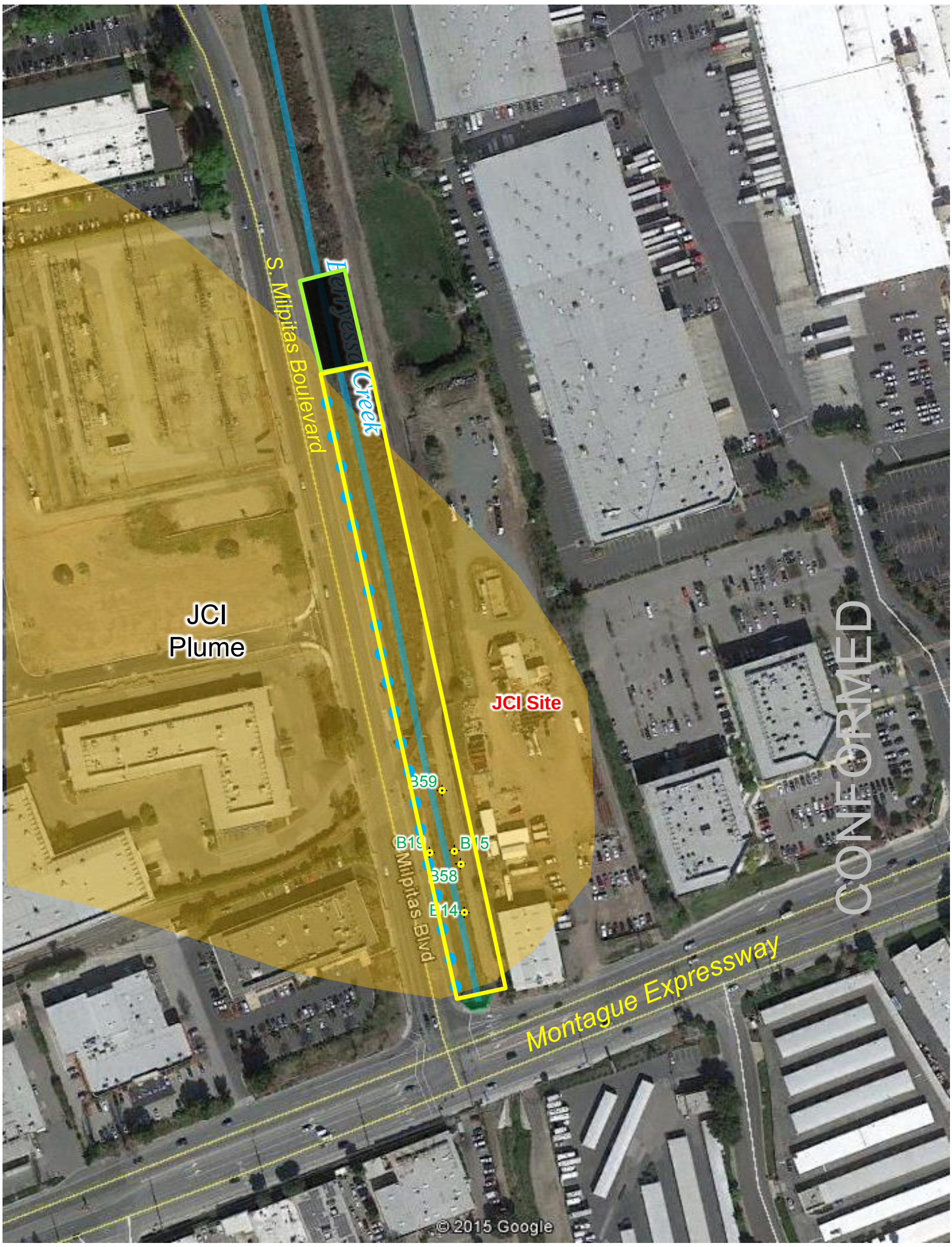

SOURCE: ***Google Earth Pro, February 23, 2014.***

Approximate location of shallow groundwater extraction well

B19 JCI shallow well (screened <40 feet bgs)

Approximate extent of JCI VOC Groundwater Plume

Area of Interest

Proposed Temporary Groundwater Treatment System Location

N

0 feet 150

TITLE: **Approximate Location of Shallow Groundwater Extraction Wells in AOI**

LOCATION: **Upper Berryessa Creek FRMP**
Between Montague Expressway and Yosemite Drive
Milpitas, California

TETRA TECH

CHECKED:	IA
DRAFTED:	KDH
FILE:	100-SWW-T31331
DATE:	10-15-15

FIGURE: **4**

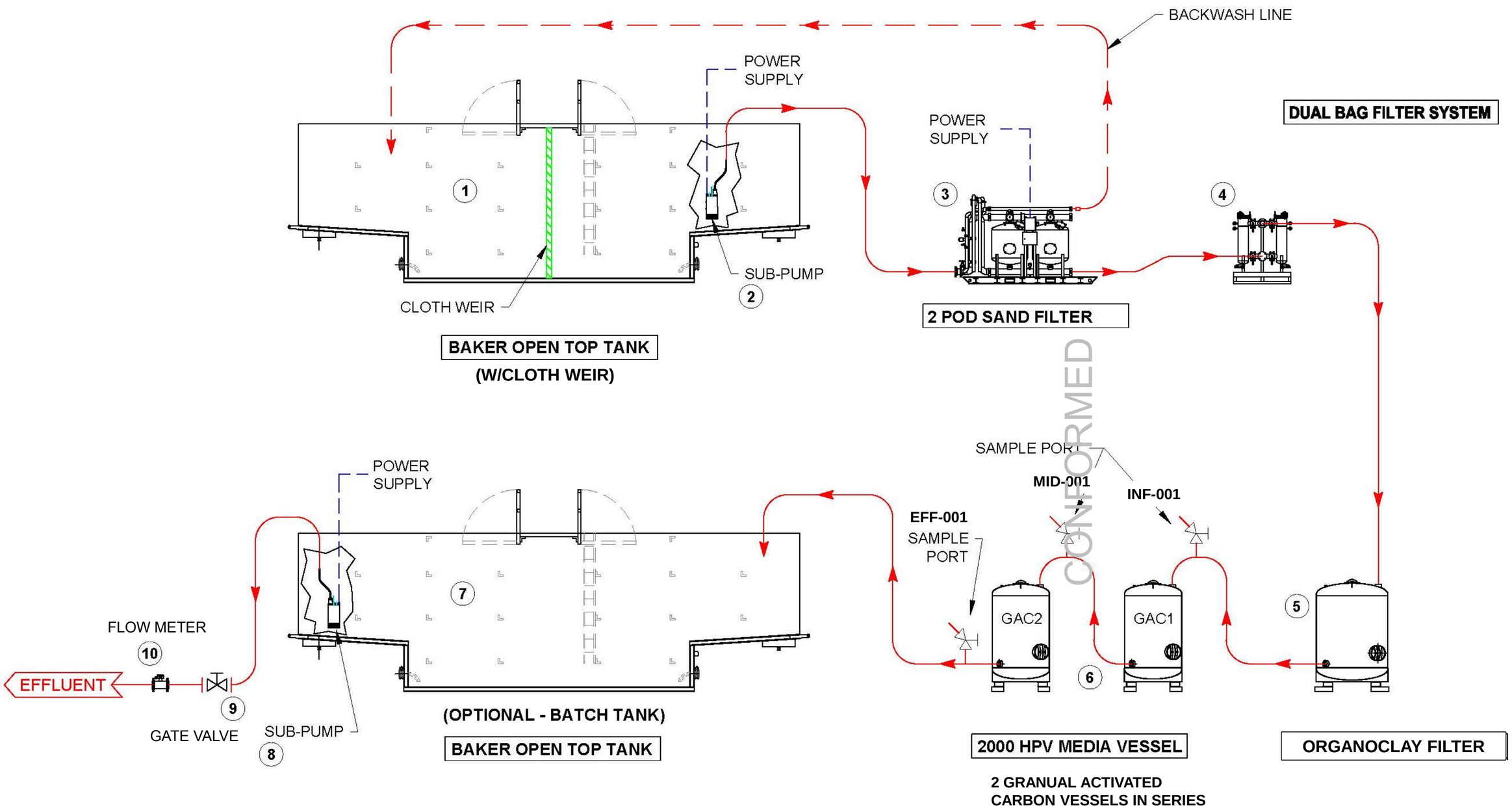

TITLE:	**Process Flow Schematic**
LOCATION:	**Upper Berryessa Creek FRMP** **Between Montague Expressway and Yosemite Drive** **Milpitas, California**

TETRA TECH

CHECKED:	SEP	FIGURE:
DRAFTED:	JAA	**5**
FILE:	100-SWW-T31331	
DATE:	10-30-15	

ATTACHMENTS

CONFORMED

Attachment A
SFBRWQCB Non-Enforcement Letter Dated August 14, 2015

CONFORMED

August 14, 2015
File No. 43S0065 (mej)

Amanda Cruz
San Francisco Planning Branch
US Army Corps of Engineers
1455 Market Street
San Francisco, CA
Amanda.B.Cruz@usace.army.mil

SUBJECT: Berryessa Creek Channel Modification Project, adjacent to the former JCI Jones Chemicals Facility, 985 Montague Expressway, Milpitas, Santa Clara County

Dear Ms. Cruz:

Thank you for meeting with Regional Water Board staff to discuss the upcoming creek channel modification project being conducted by the U.S. Army Corps. of Engineers and the Santa Clara Valley Water District. As we have discussed, the groundwater contaminant plume of volatile organic compounds (VOCs) originating from the former JCI Jones facility passes beneath passes beneath Berryessa Creek, immediately to the west of the former facility.

We understand that you will be working in the creek bed immediately adjacent to the former Jones site. As part of the construction, groundwater may be encountered. To manage groundwater that may be encountered during construction, a groundwater management plan will be developed that will include control and diversion of water, if necessary, using the most efficient means such as coffer dams, sump pumps, dewatering wells or other techniques. Any water that may be generated will be treated and discharged downstream or to a storm drain. The treatment standards for this discharge water will comply with those set forth in our NPDES General Permit (R2-2012-0012) for fuel and VOC impacted sites. However, you will not be obtaining an NPDES permit for this work. A copy of the groundwater management plan will be submitted to this agency for our review and comment.

Based on our understanding of the work outlined above and with the condition that the groundwater is treated to the standards described, we will not recommend enforcement for discharging without a permit.

The work in the creek bed will also include movement of soil/sediment as part of the construction activities. As discussed, there is no reason to believe shallow soil/sediment in the area adjacent to the former Jones facility is impacted. This being the case, no soil/sediment management plan is necessary for movement of the materials. In the case that impacted soil is encountered, it will be segregated and stockpiled for offsite disposal. We find this acceptable.

CONFORMED

If you have any questions, please contact Mark Johnson of my staff at (510) 622-2493 [e-mail mjohnson@waterboards.ca.gov].

Sincerely,

[Original digitally signed and furnished upon request;
does not transfer as PDF copy]

Bruce H. Wolfe
Executive Officer

cc: Ira Artz, Ira.Artz@tetratech.com
Susan Glendening, susan.glendening@waterboards.ca.gov
Tim Gaffney, JCI Jones Chemicals, Inc. tgaffney@jcichem.com
Chuck Pardini, Arcadis Chuck.Pardini@arcadis-us.com

CONFORMED

Attachment B
Photograph of Typical Temporary Groundwater Treatment Plant

CONFORMED

Attachment C
Typical Specifications for a 100 Gallon Per Minute Temporary Groundwater Treatment Plant

NOTE: All equipment brands depicted herein shall be considered as "typical" and are provided for reference purposes, with "or equivalent" applicable to all equipment.

CONFORMED

PRODUCT DATA SHEET

January, 2007

2" DUPLEX BAG FILTER SYSTEM

GENERAL INFORMATION

Two independent filter housings are skid-mounted and piped such that one filter unit is active while the other is out of service. Inlet and outlet connections are provided on each end of the skid. Use for filtering a wide range of industrial and commercial process fluids, groundwater discharge from construction sites, stormwater or urban runoff.

WEIGHTS AND MEASURES

» Capacity:	50 - 110 gpm per filter when clean (depends on filter media micron rating)
» Design Pressure:	150 psi
» Design Temp:	140°F max.*
» Height:	4'-9" (overall)
» Width :	4'-8"
» Length:	5'-8"
» Weight:	550 lbs. (approx.)

SKID DESIGN

» Outer Frame:	6 x 8.2 A36 carbon steel channel
» Inter. Frame:	2"x2 "x3/16" A36 carbon steel angle
» Filter Housing Pad:	15 x 33.9 A36 carbon steel channel
» Forklift Pockets:	Through front and rear framing channels
» Cover:	Expanded metal grating
» Lifting Eyes:	All four corners

*Practical limit for the PVC header piping. Unit could be used up to 225°F if carbon steel piping is used instead.

FILTER DESIGN

» Filter Housing	Rosedale model 8-30-2F-2-150-C-B-S-PB
» Top Cover:	Three eyenuts; hinged for easy access
» Piping:	2" schedule 80 PVC (inlet and outlet headers)
» Inlet & Outlet:	2" 150# ANSI flanges
» Cover Seal:	Buna N (Nitrile) o-ring
» Housing Material:	Carbon Steel
» Filter Basket:	30" deep, 6.7" diameter, 4.4 sq. ft. surface area, 1000 cu. in. volume, 9/64" dia holes (51% open)
» Filter Media:	Filter bags, size #2. Wide range of micron ratings is available, down to 1.0.
» Vent Valves:	1/4" ball valve on top cover
» Drain Valves:	1" ball valve on the bottom of each housing

SURFACE DETAILS

» Exterior Coating:	High gloss polyurethane

TESTS / CERTIFICATIONS

» Test Performed:	Scheduled QMS inspections

CONFORMED

BAKERCORP™

To the best of our knowledge the technical data contained herein are true and accurate at the date of issuance and are subject to change without prior notice. No guarantee of accuracy is given or implied because variations can and do exist. NO WARRANTY OR GUARANTEE OF ANY KIND IS MADE BY BAKERCORP, EITHER EXPRESSED OR IMPLIED.

3020 Old Ranch Parkway • Suite 220 • Seal Beach, CA • 562-430-6262

ITEM	DESCRIPTION
1	Rosedale Model 8302F2150CBS-PB Bag Filter, all welded construction, carbon steel wetted parts; Design Pressure: 150 psi; Design Temperature: 400°F; Filter Basket: 304 SS, 4.4 sq. ft. area, 9/64" dia. holes (51% open).
2	Expanded metal grating
3	Mounting skid with forklift pockets
4	1" bottom drain
5	2" PVC piping

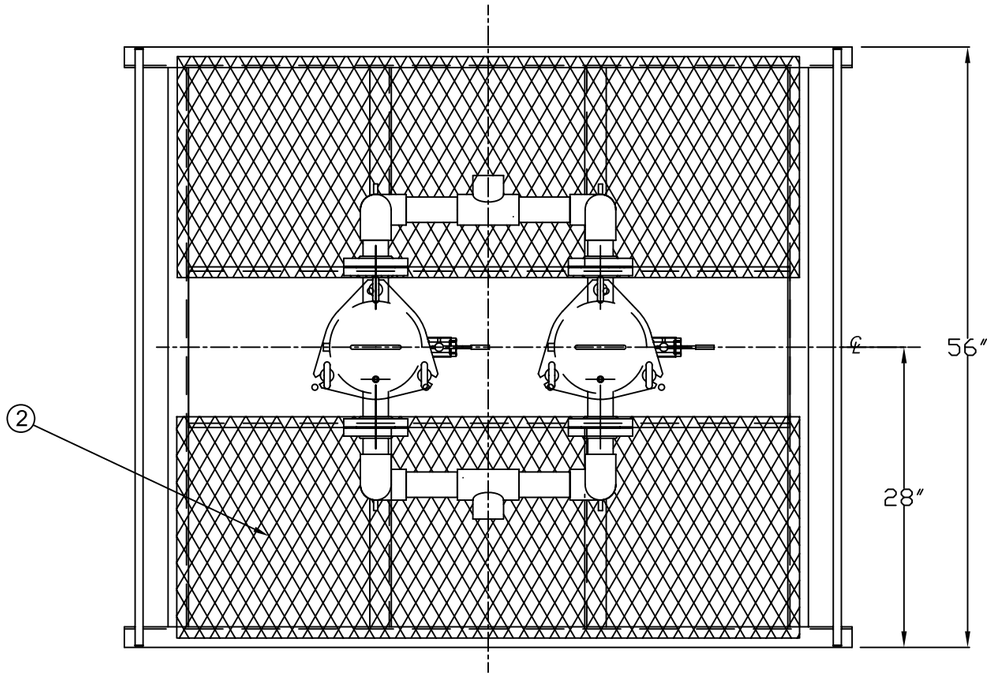

TOP VIEW

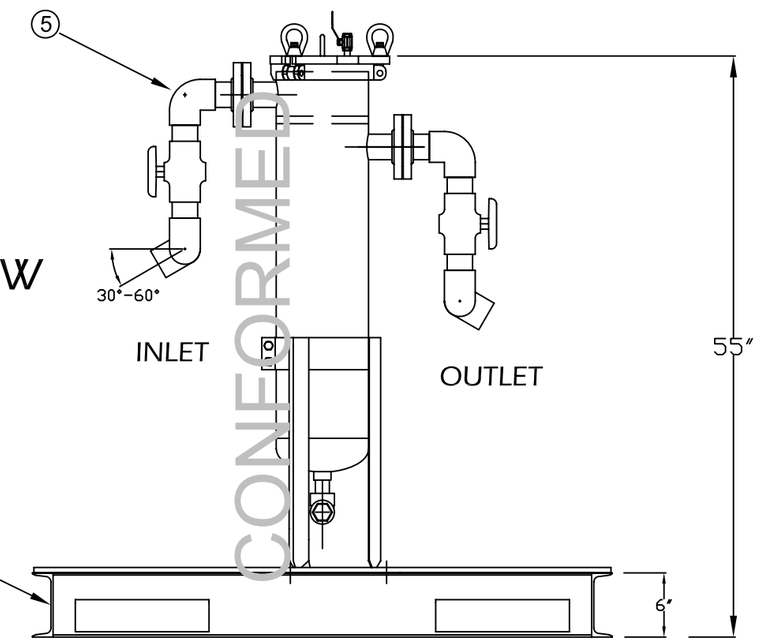

SIDE VIEW

CONFORMED

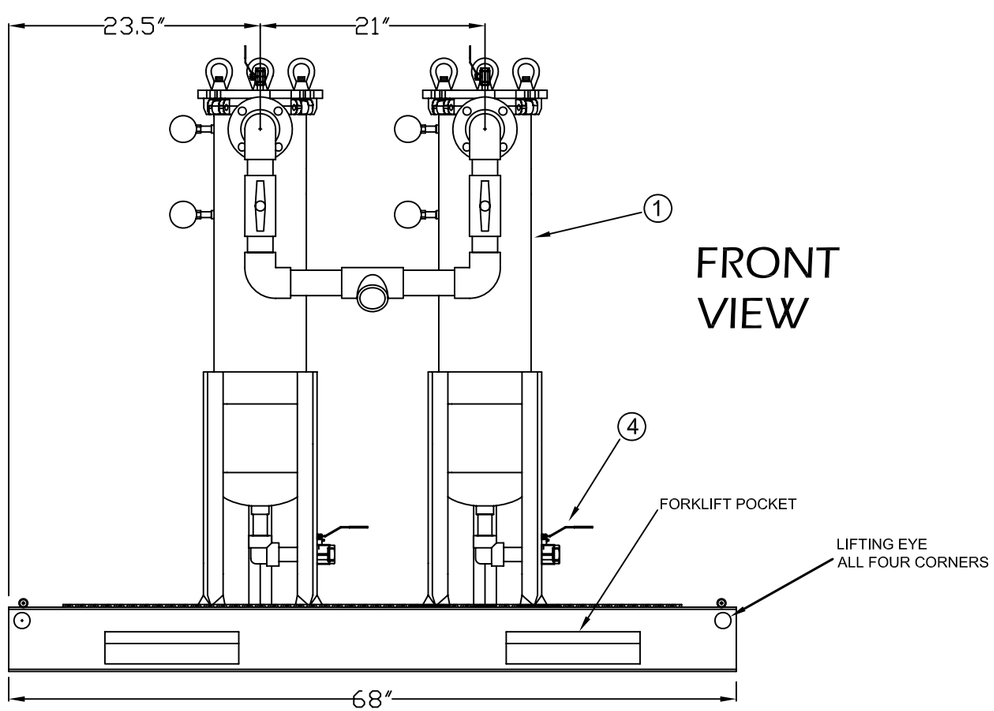

FRONT VIEW

The information contained herein is proprietary to BakerCorp and shall not be reproduced or disclosed in whole or in part, or used for anydesign or manufacture except when user obtains direct written authorization from BakerCorp.

BAKERCORP™
3020 OLD RANCH PARKWAY
SEAL BEACH, CA 90740-2751

REV.	DESCRIPTION	DATE	BY
G			
F			
E			
D			
C			
B			
A	Changed drawing title	2/18/05	PJB

SCALE: To Scale	SIZE B	ORIGINAL DWG. DATE 18AUG03
DRAWN BY: P.J.B.	APPROVED BY: –	CAT/CLASS ––
TITLE 2" BAG FILTER UNIT		SHEET 1 OF 1
DRAWING NO. S-9-M0010-1-		REV. A

OC Organoclay/Carbon Blend

BakerCorp's OC series filtration media is available for liquid phase applications and is a blend of "R 8x30" activated carbon and "Z-200" modified zeolite (often referred to as organoclay). This carbon/organoclay mixture is ideal for the filtration of oil and grease from contaminated water. This media also has some catalytic abilities to adsorb anions such as chromate, selenate, sulfate, hydrocarbons (such as Benzene, Toluene, and Xylene), heavy metals (such as lead and cadmium), and various petroleum products (such as oil) from aqueous waste streams.

ORGANOCLAY PHYSICAL PROPERTIES:

Cation Exchange Capacity:	2.20 meq/g
Bulk Density (lbs./cu.ft.):	58
Hardness (Mohs Scale):	5.1
Pore Size:	4.0 A
Specific Surface Area:	40 sq. m/g
Thermal Stability:	1,202 F
Crushing Strength:	2,500 lbs/sq inch
Blended Bulk Density (lbs./cu. Ft.)	44

These specifications represent general parameters and are subject to change. Please consult with BakerCorp before proceeding with your application.

CONFORMED

4306 W. 190th Street, Torrance, California 90504
Phone: 310.303.3700 ♦ Fax: 310.406.3001

PRODUCT DATA SHEET

January, 2007

KLEEN.WATER 1000HPV & 2000HPV

GENERAL INFORMATION

These units are designed for the efficient purification of contaminated water or liquid streams. These filters have the ability to remove contaminants to non-detectable levels. The vessels are constructed of heavy-duty mild steel and are lined with a double-layer epoxy coating.

WEIGHTS AND MEASURES

» Max. Flowrate:	*1000HPV:* 80 gpm *2000HPV:* 100 gpm
» Max. Pressure:	75 psi
» Max. Temp:	150°F
» Height:	*1000HPV:* 70″ *2000HPV:* 96″
» Diameter:	48″
» Shipping Wt*: (drum + media) (*Media dependent)	1000HPV: 2050 lbs. – 3050 lbs. 2000HPV: 3100 lbs. – 5100 lbs.

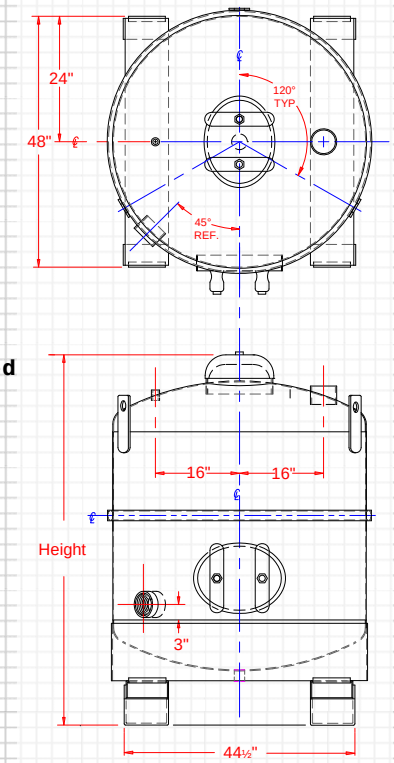

Downflow operation is recommended

FILTER MEDIA

» Types:	▪Activated Carbon ▪Organoclay ▪Ion Exchange Resin ▪Specialty Media
» Volume:	*1000HPV:* 34 cu. ft. *2000HPV:* 68 cu. ft.
» Weight*: (*Media dependent)	*1000HPV:* 1000 lbs. – 2000 lbs. *2000HPV:* 2000 lbs. – 4000 lbs.

MISCELLANEOUS

» Inlet:	4″ FNPT
» Outlet:	4″ FNPT
» Interior Coating:	Double-layered epoxy coating
» Internals:	PVC underdrain
» Media Access:	Top & side 12″x16″ manways (neoprene gaskets)

PRESSURE DROP DATA

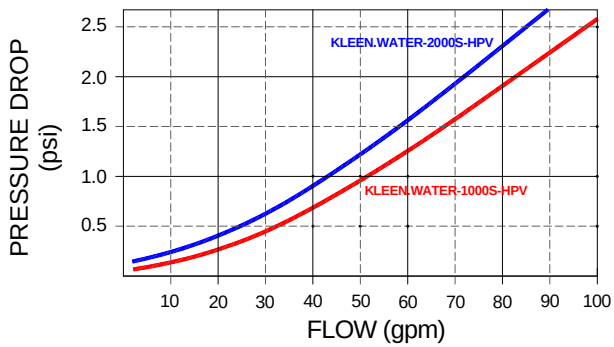

CONFORMED

NOTE:

1. Wet activated carbon preferentially removes oxygen from air. In closed or partially closed containers and vessels, oxygen depletion may reach hazardous levels. If workers are to enter a vessel containing carbon, appropriate procedures for potentially low oxygen spaces must be followed, including all federal and state requirements.

BAKERCORP™

To the best of our knowledge the technical data contained herein are true and accurate at the date of issuance and are subject to change without prior notice. No guarantee of accuracy is given or implied because variations can and do exist. NO WARRANTY OR GUARANTEE OF ANY KIND IS MADE BY BAKERCORP, EITHER EXPRESSED OR IMPLIED.

3020 Old Ranch Parkway • Suite 220 • Seal Beach, CA • 562-430-6262

TSURUMI PUMP

LB - SERIES

SEMI-VORTEX - DEWATERING PUMP

SPECIFICATIONS

FEATURES

1. Semi-vortex Urethane Rubber or high chrome cast iron impeller solids and allows for pumping of sand and stringy material.

2. Highly efficient, continuous duty air filled, copper wound motor with class E, insulation minimizes the cost of operation.

3. Built in thermal protection prevents motor failure due to overloading, accidental run-dry and single phasing in three phase units.

4. Double inside mechanical seals with silicon carbide faces running in an oil filled chamber provide for one the most durable seal designs available.

5. Double shielded, permanently lubricated, high temperature C3 ball bearings rated for a B-10 life of 60,000 hours provide for extended operational life.

6. Model LB-480A & LB-800A Automatic Submersible pump performs like the non-automatic version in every aspect of construction site usage requiring a tough and durable pump

7. Slime design allows pumps fit Into 8” pipes. (Manual type only)

APPLICATIONS

1. Residential, commercial, industrial wastewater and site drainage.

2. Decorative waterfalls and fountains.

3. Raw water supply from lakes or rivers.

4. Sediment removal from small sumps or basins.

Intertek

OIL LIFTER EQUIPPED

CONFORMED

SPECIFICATIONS

Discharge Size	2 - 3 "Npt (50 - 80 mm)
Horsepower Range	1/2 - 2Hp. (0.40 - 1.5kW)
Performance Range Capacity	15.9 - 111.0 GPM. (0.06 - 0.42 m^3/min)
Head	13.1 Ft. - 68.9 Ft. (4.0 - 18.9 m)
Maximum water temperature	104^0 F. (40^0 C.)
Materials of Construction	
Casing	Butadiene Rubber + Natural Rubber + Steel [LB(T)-1500]
Impeller	Urethane Rubber , High Chrome Cast Iron [LB(T)-1500]
Shaft	403 Stainless Steel
Motor Frame	Aluminum alloy
Fasteners	304 Stainless Steel
Mechanical Seal	Silicon Carbide
Elastomers	NBR (Nitrile Butadiene Rubber)
Impeller Type	Semi-vortex, solids handling.
Solids Handling Capability	0.236” (6.0mm)
Bearings	Prelubricated, Double Shielded
Motor Nomenclature	
Type, Speed, Hz.	Air Filled, 3600 Rpm, 60 Hz.
Voltage, Phase	115 / 230V., 1 Phase 230 / 460 / 575V., 3 Phase
Insulation	Class E, B
Accessories	Submersible Power Cable 32 - 50' (10 - 15m)
Operational Mode	Manual , Automatic(LB-480A / 800A)

OPTIONS

Length as Required,

TS-301 Float Switch

TSURUMI PUMP

LB - SERIES
SEMI-VORTEX - DEWATERING PUMP

PERFORMANCE CURVE

MODEL	BORE	HP	KW	RPM	SOLIDS DIA	LIQUID	SG.	VISCOSITY	TEMP.
LB(Z)-800(A)-61	2"/50mm	1	0.75	3300	0.236"/6mm	Water	1.0	1.123 cSt.	60°F

PUMP TYPE	PHASE	VOLTAGE	AMPERAGE	HZ	STARTING METHOD	INS. CLASS
Semi-Vortex - Dewatering Pump	Single	115-120 / 230	9.6-9.2 / 5.1	60	Capacitor Start	E

CURVE No.	DATE	PHASE	VOLTAGE	AMPERAGE	HZ	STARTING METHOD	INS. CLASS
-	-	-	-	-	-	-	-

REMARKS:

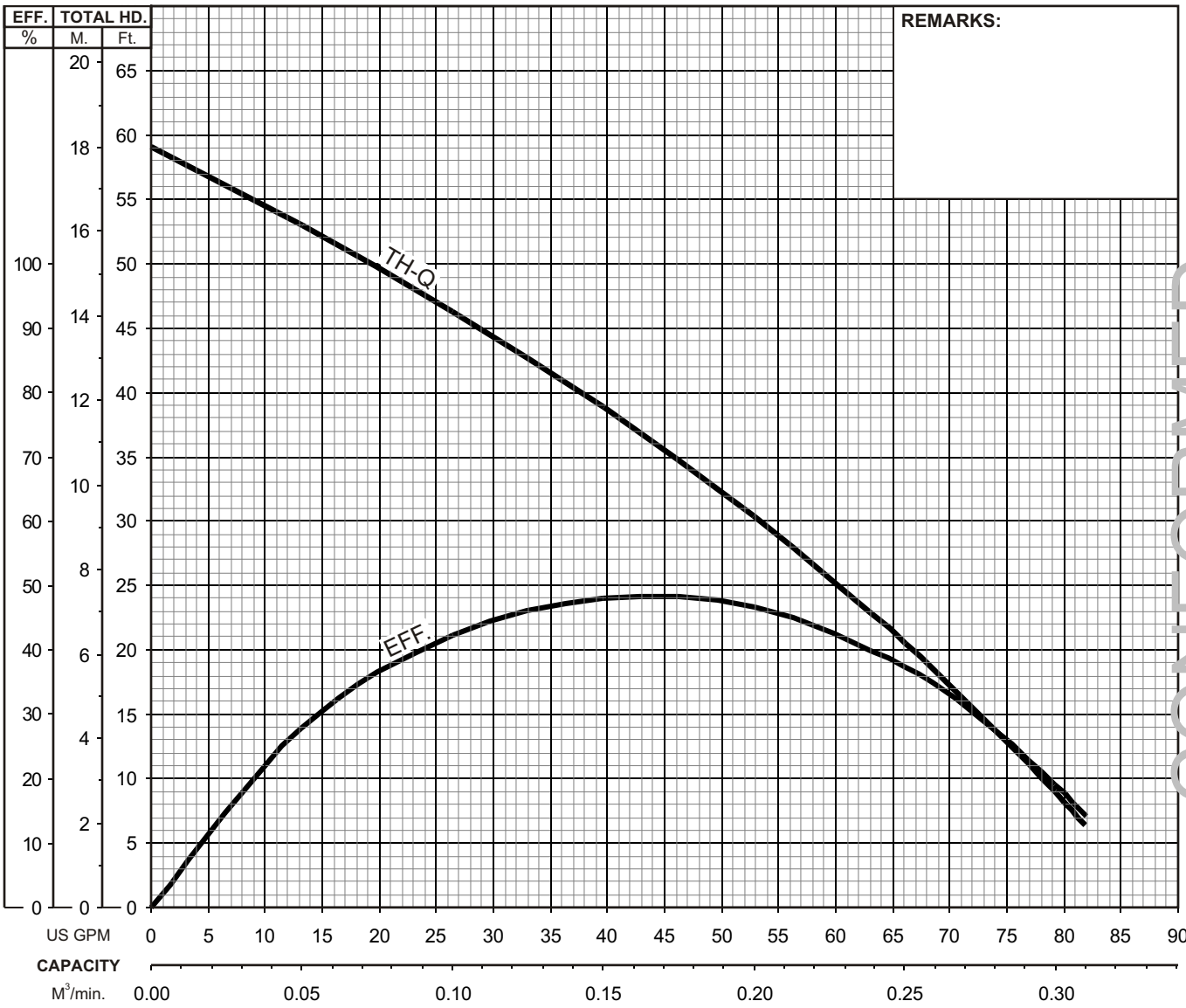

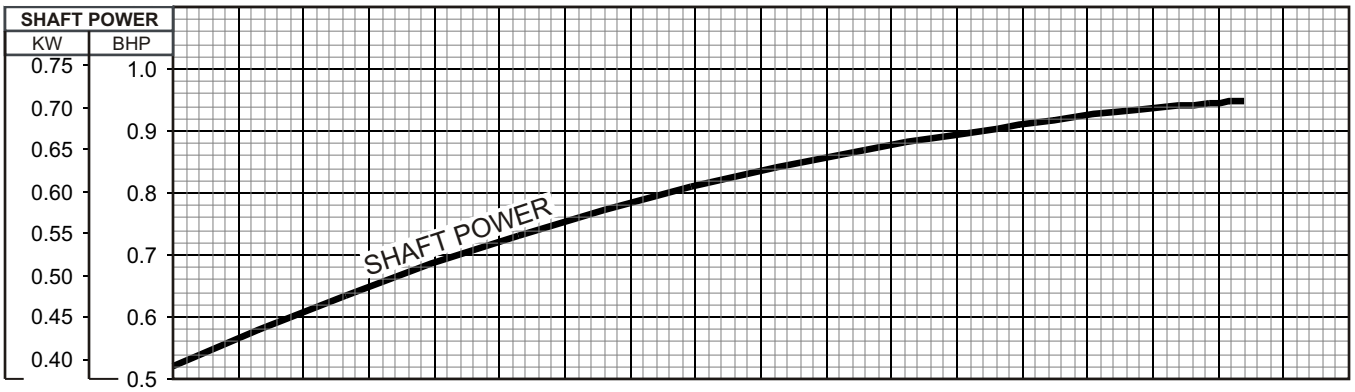

CONFORMED

TSURUMI PUMP

LB - SERIES
SEMI-VORTEX - DEWATERING PUMP

DIMENSIONS

LB-800-61
LBT-800-61

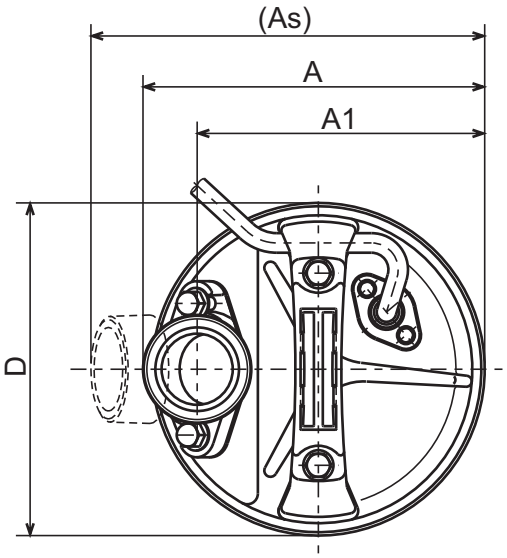

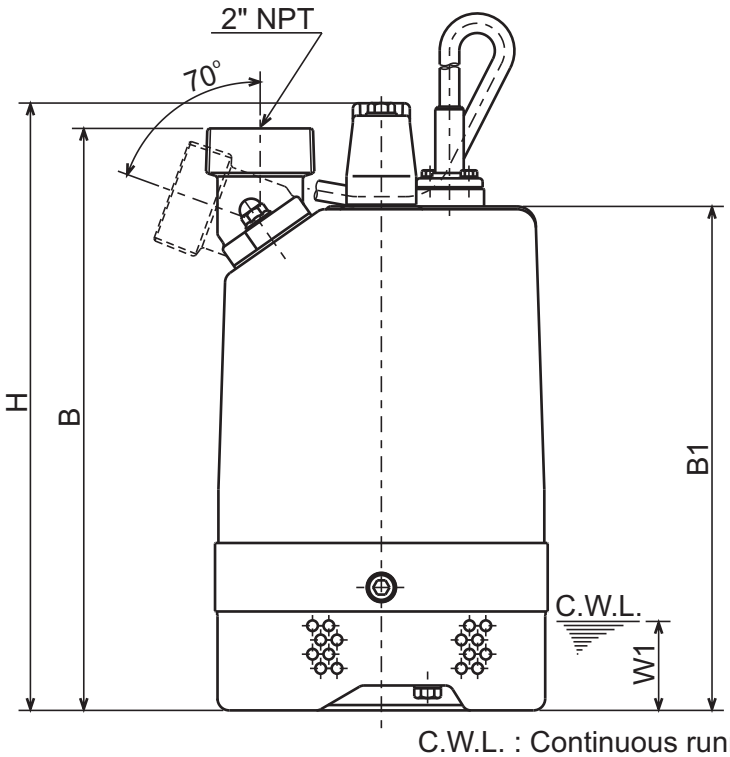

C.W.L. : Continuous running Water Level

DIMENSIONS:USCS (Inch)

Model	HP	NOM. SIZE	Pump & Motor							C.W.L.	Wt.
			A	As	A1	B	B1	D	H	W1	(lbs.)
LB-800-61	1	2"	7 9/16	8 11/16	6 3/8	12 7/8	11 1/8	7 3/8	13 7/16	2	29
LBT-800-61	1	2"	7 9/16	8 11/16	6 3/8	12 7/8	11 1/8	7 3/8	13 7/16	2	28

DIMENSIONS:METRIC (mm)

Model	kW	NOM. SIZE	Pump & Motor							C.W.L.	Wt.
			A	As	A1	B	B1	D	H	W1	(kg)
LB-800-61	0.75	50	192	221	162	327	283	187	341	50	13.2
LBT-800-61	0.75	50	192	221	162	327	283	187	341	50	12.8

CONFORMED

TSURUMI PUMP

LB - SERIES
SEMI-VORTEX - DEWATERING PUMP

PERFORMANCE CURVE

MODEL	BORE	HP	KW	RPM	SOLIDS DIA	LIQUID	SG.	VISCOSITY	TEMP.
LB-1500-60	3"/80mm	2	1.5	3480	0.236"/6mm	Water	1.0	1.123 cSt.	60°F

PUMP TYPE	PHASE	VOLTAGE	AMPERAGE	HZ	STARTING METHOD	INS. CLASS
Semi-Vortex Dewatering Pump	Single	110/115/120, 230	27.1/26.2/27.0, 13.2	60	Capacitor Start	B

CURVE No.	DATE	PHASE	VOLTAGE	AMPERAGE	HZ	STARTING METHOD	INS. CLASS
-	-	-	-	-	-	-	-

REMARKS:

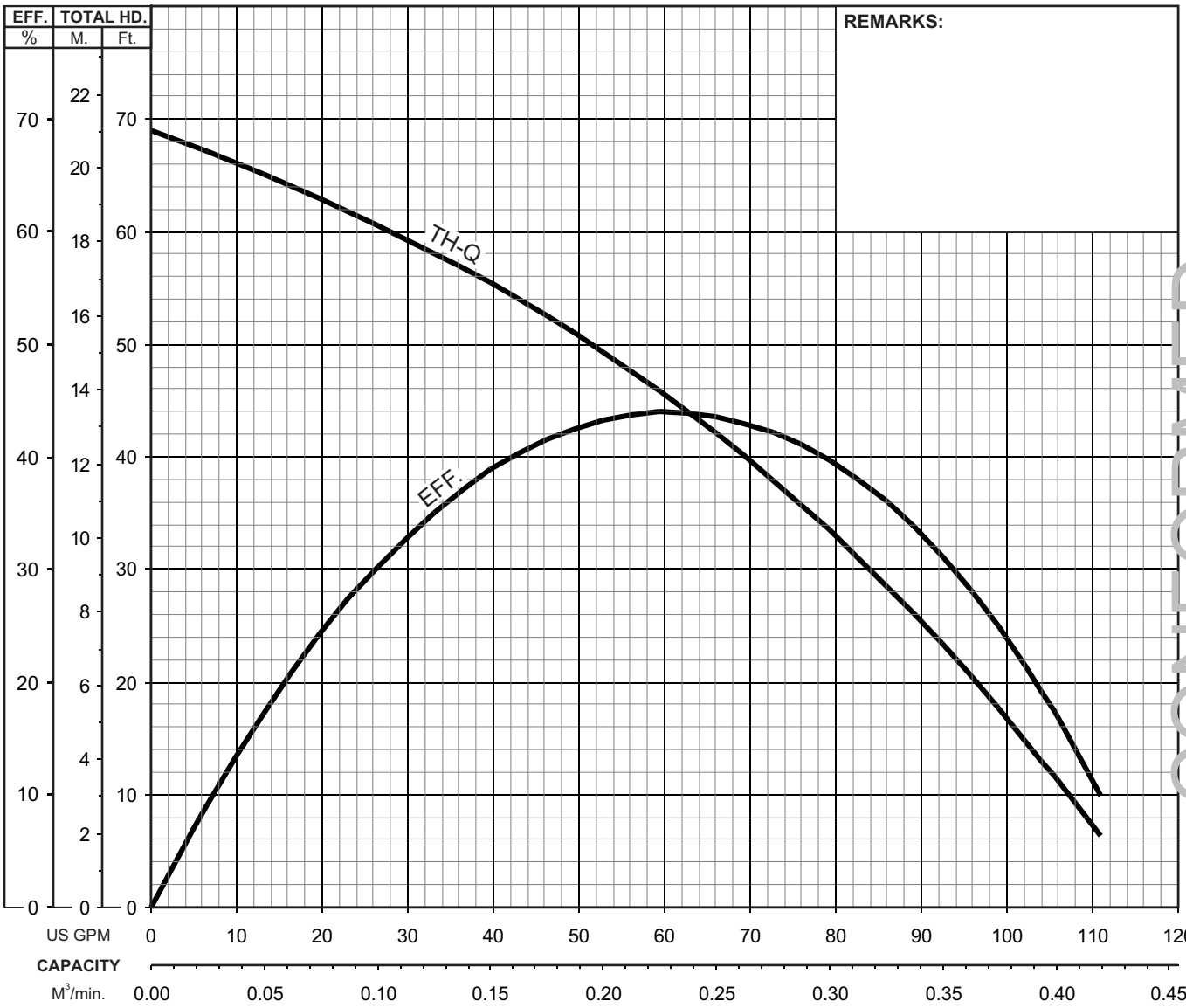

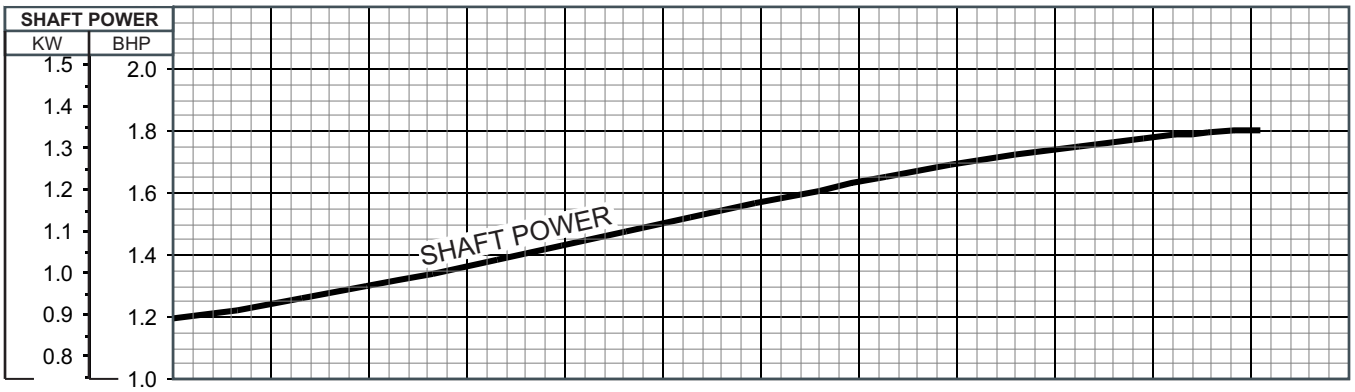

CONFORMED

TSURUMI PUMP

LB - SERIES
SEMI-VORTEX - DEWATERING PUMP

DIMENSIONS

LB-1500-60
LBT-1500-60

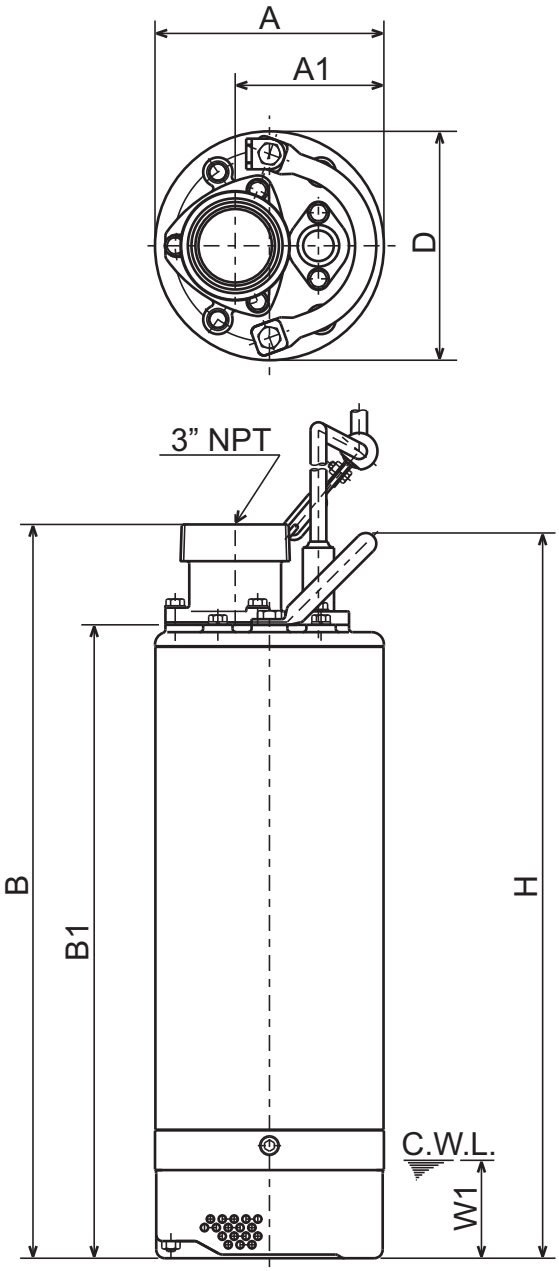

C.W.L. : Continuous running Water Level

DIMENSIONS:USCS (Inch)

Model	HP	NOM. SIZE	Pump & Motor						C.W.L.	Wt.
			A	A1	B	B1	D	H	W1	(lbs.)
LB-1500-60	2	3"	7 3/8	4 13/16	23 5/8	20 3/8	7 3/8	23 5/16	3 1/8	72
LBT-1500-60	2	3"	7 3/8	4 13/16	23 5/8	20 3/8	7 3/8	23 5/16	3 1/8	70

DIMENSIONS:METRIC (mm)

Model	kW	NOM. SIZE	Pump & Motor						C.W.L.	Wt.
			A	A1	B	B1	D	H	W1	(kg)
LB-1500-60	1.5	80	187	122	600	518	187	593	80	32.5
LBT-1500-60	1.5	80	187	122	600	518	187	593	80	32.0

CONFORMED

TSURUMI PUMP

HS - SERIES

SEMI-VORTEX - WASTEWATER PUMP - WITH AGITATOR

SPECIFICATIONS

FEATURES

1. Semi-vortex Urethane Rubber impeller with agitator suspends solids and allows for pumping of sand and stringy material.

2. Highly efficient, continuous duty air filled, copper wound motor with class E, insulation minimizes the cost of operation.

3. Built in thermal protection prevents motor failure due to overloading, accidental run-dry and single phasing in three phase units.

4. Double inside mechanical seals with silicon carbide faces running in an oil filled chamber provide for one the most durable seal designs available.

5. Double shielded, permanently lubricated, high temperature C3 ball bearings rated for a B-10 life of 60,000 hours provide for extended operational life.

HSZ : HS series dewatering pump is available in an automatic Type with simple float switch.

HSD : Single Phase compact pump fit for use in slurry dewatering in foundation works.

APPLICATIONS

1. Residential, commercial, industrial wastewater and site drainage.

2. Decorative waterfalls and fountains.

3. Raw water supply from lakes or rivers.

4. Sediment removal from small sumps or basins.

Intertek

OIL LIFTER EQUIPPED

CONFORMED

SPECIFICATIONS

Discharge Size	2 - 3 "Npt (50 - 80 mm)
Horsepower Range	1/2 - 1Hp. (0.40 - 0.75kW)
Performance Range Capacity	13.2 - 61.0 GPM. (0.05 - 0.23 m^3/min)
Head	13.1 Ft. - 62.0 Ft. (4.0 - 18.9 m)
Maximum water temperature	104^0 F. (40^0 C.)
Materials of Construction	
Casing	Cast Iron , Ductile Cast Iron(HSD)
Impeller	Urethane Rubber , High Chrome Cast Iron(HSD)
Shaft	403 Stainless Steel
Motor Frame	Aluminum alloy
Fasteners	304 Stainless Steel
Mechanical Seal	Silicon Carbide
Elastomers	NBR (Nitrile Butadiene Rubber)
Impeller Type	Semi-vortex, solids handling.
Solids Handling Capability	0.276 - 0.393" (7.0 - 10.0mm)
Bearings	Prelubricated, Double Shielded
Motor Nomenclature	
Type, Speed, Hz.	Air Filled, 3600 Rpm, 60 Hz.
Voltage, Phase	115 / 230V., 1 Phase
Insulation	Class E
Accessories	Submersible Power Cable 20 - 32' (6.2 - 10m)
Operational Mode	Manual , Automatic(HSZ)

OPTIONS

Length as Required,

TS-301 Float Switch

TSURUMI PUMP

HS - SERIES
SEMI-VORTEX - WASTEWATER PUMP

PERFORMANCE CURVE

MODEL	BORE	HP	KW	RPM	SOLIDS DIA	LIQUID	SG.	VISCOSITY	TEMP.
HS(Z)3.75S-61	3"/80mm	1	0.75	3408	0.276"/7.0mm	Water	1.0	1.123 cSt.	60°F

PUMP TYPE	PHASE	VOLTAGE	AMPERAGE	HZ	STARTING METHOD	INS. CLASS
Semi-Vortex - Wastewater Pump	Single	110/115/120, 230	10.0 / 9.6 / 9.4 , 4.6	60	Capacitor Start	E

CURVE No.	DATE	PHASE	VOLTAGE	AMPERAGE	HZ	STARTING METHOD	INS. CLASS
-	-	-	-	-	-	-	-

REMARKS:

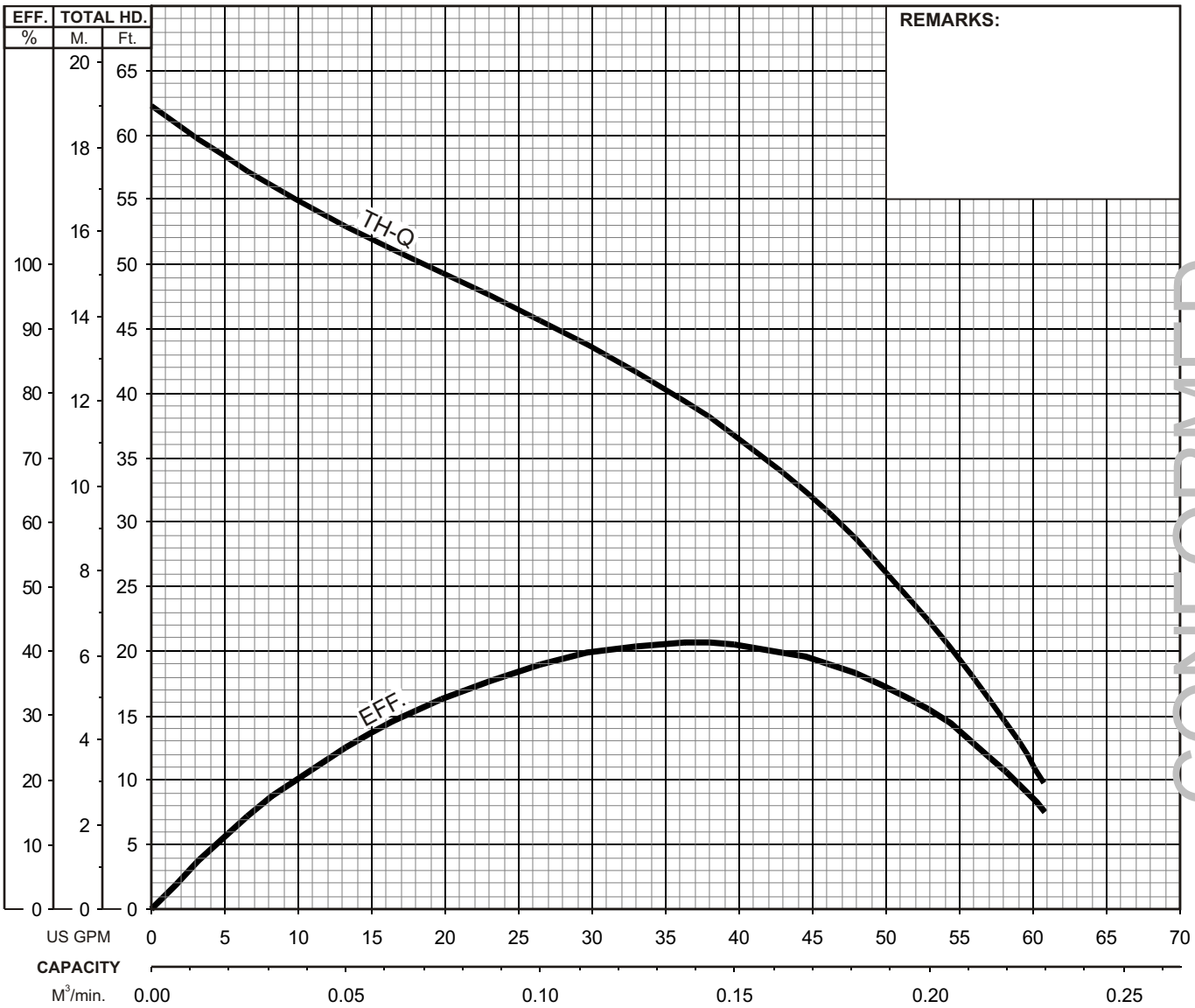

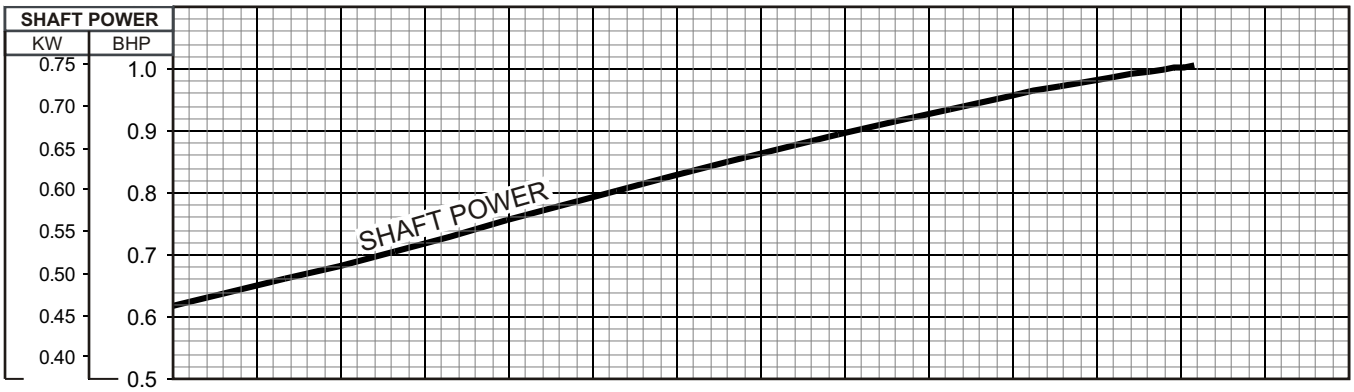

CONFORMED

TSURUMI PUMP

HS - SERIES
SEMI-VORTEX - WASTEWATER PUMP

DIMENSIONS

HS2.75S-61
HS3.75S-61

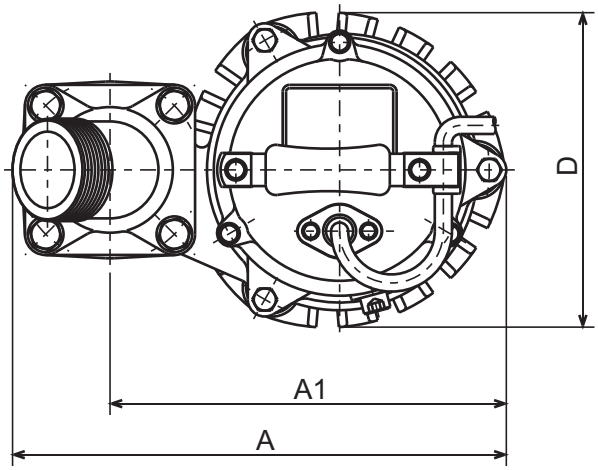

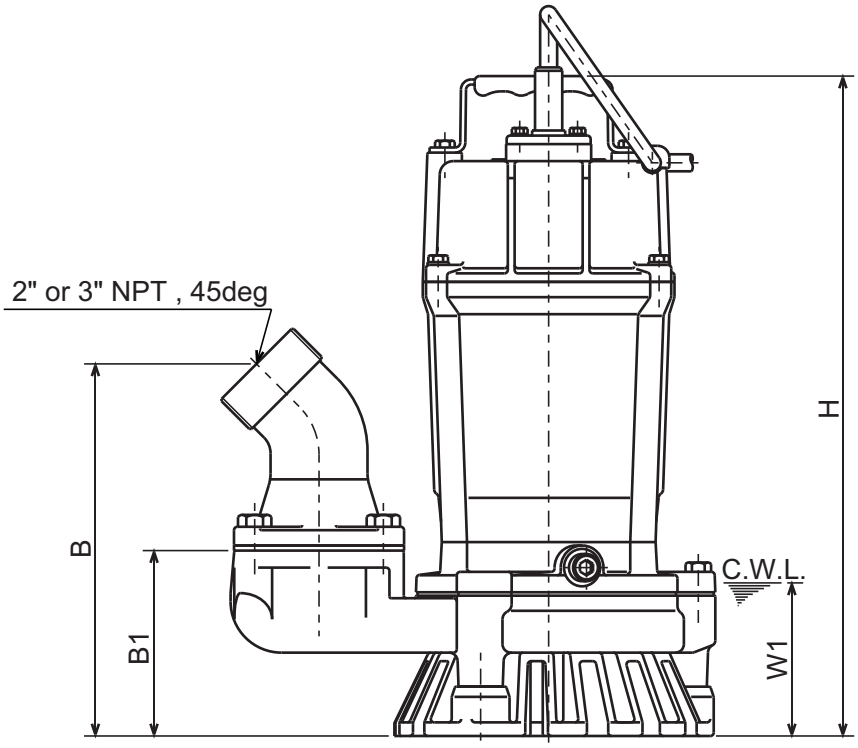

C.W.L. : Continuous running Water Level

DIMENSIONS:USCS (Inch)

Model	HP	NOM. SIZE	Pump & Motor						C.W.L.	Wt. (lbs.)
			A	A1	B	B1	D	H	W1	
HS2.75S-61	1	2"	11 7/16	9 3/16	8 5/8	4 5/16	7 5/16	15 1/4	3 1/2	40
HS3.75S-61	1	3"	12 7/16	9 3/16	9 1/2	4 5/16	7 5/16	15 1/4	3 1/2	42

DIMENSIONS:METRIC (mm)

Model	kW	NOM. SIZE	Pump & Motor						C.W.L.	Wt. (kg)
			A	A1	B	B1	D	H	W1	
HS2.75S-61	0.75	50	290	233	219	109	185	388	90	18.2
HS3.75S-61	0.75	80	317	233	241	109	185	388	90	19.0

CONFORMED

TSURUMI PUMP

NK - SERIES
SEMI-VORTEX - DEWATERING PUMP

SPECIFICATIONS

FEATURES

1. Double inside mechanical seals with silicon carbide faces, running in an oil filled chamber and further protected by a lip seal running against a replaceable, stainless steel shaft sleeve, provides for the most durable seal design available.

2. Highly efficient, continuous duty air filled, copper wound motor with class B, insulation minimizes the cost of operation.

3. Built in thermal & amperage sensing, protector prevents motor failure due to overloading or accidental run dry conditions.

4. Double shielded, permanently lubricated, high temperature C3 ball bearings rated for a B-10 life of 60,000 hours, extend operational life.

5. Top discharge, flow-thru design enables operation at low water levels for extended periods.

Sand Kit : NK2-15SK / NK2-22SK
The Sand Kit can be added to the NK series to suspend sand and prevent sand lock.

APPLICATIONS

1. Residential, commercial, industrial wastewater and construction site drainage.

2. Effluent transfer.

3. Decorative waterfalls and fountains.

4. Raw water supply from rivers or lakes..

OIL LIFTER EQUIPPED

Intertek

CONFORMED

SPECIFICATIONS	STANDARD	OPTIONS
Discharge Size	3" Npt (80 mm)	
Horsepower Range	2 ~ 3 Hp. (1.5 ~ 2.2 kW)	
Performance Range Capacity	55.5 ~ 211.0 GPM. (0.21 ~ 0.80 m^3/min)	
Head	34.4 ~ 85.0 Ft. (10.50 ~ 25.91 m)	
Maximum water temperature	104^0 F. (40.0^0 C.)	
Materials of Construction		
Casing	Butadiene Rubber + Natural Rubber , Cast Iron (NK2-22L)	
Impeller	Ductile Cast Iron , High Chrome Cast Iron (NK2-22L , NK2-15SK/22SK)	
Shaft	420 , 403 Stainless Steel	
Motor Frame	Aluminum alloy	
Fasteners	304 Stainless Steel	
Mechanical Seal	Silicon Carbide	
Elastomers	NBR (Nitril Butadiene Rubber)	
Impeller Type	Semi-vortex, solids handling.	
Solids Handling Capability	0.334” (8.5mm)	
Bearings	Prelubricated, Double Shielded	
Motor Nomenclature		
Type, Speed, Hz.	Air Filled, 3600 Rpm, 60 Hz.	
Voltage, Phase	110/220 V., 1 Ph (NK2-15 Dual Voltage)	
Insulation	Class B	
Accessories	Submersible Power Cable 32' (10.0 m)	Length as Required
Operational Mode	Manual	TS-301 Float Switch

TSURUMI PUMP

NK - SERIES
SEMI-VORTEX - DEWATERING PUMPS

PERFORMANCE CURVE

MODEL	BORE	HP	KW	RPM	SOLIDS DIA	LIQUID	SG.	VISCOSITY	TEMP.
NK2-22L	3"/80mm	3	2.2	3465	0.334"/8.5mm	Water	1.0	1.123 cSt.	60°F

PUMP TYPE	PHASE	VOLTAGE	AMPERAGE	HZ	STARTING METHOD	INS. CLASS
Semi-Vortex - Dewatering Pump	Single	220	13.0	60	Capacitor Start	B

CURVE No.	DATE	PHASE	VOLTAGE	AMPERAGE	HZ	STARTING METHOD	INS. CLASS
-	-	-	-	-	-	-	-

REMARKS:

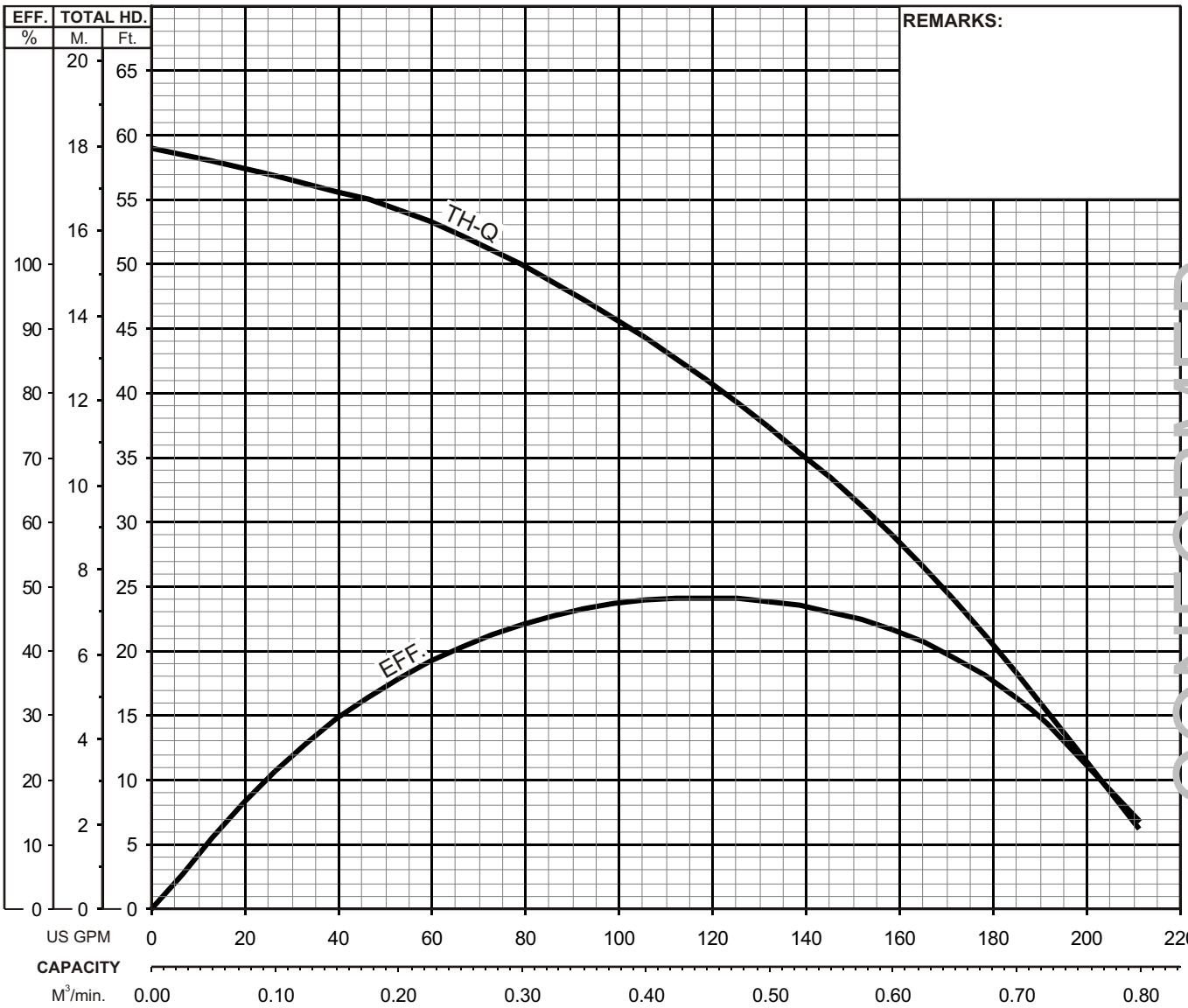

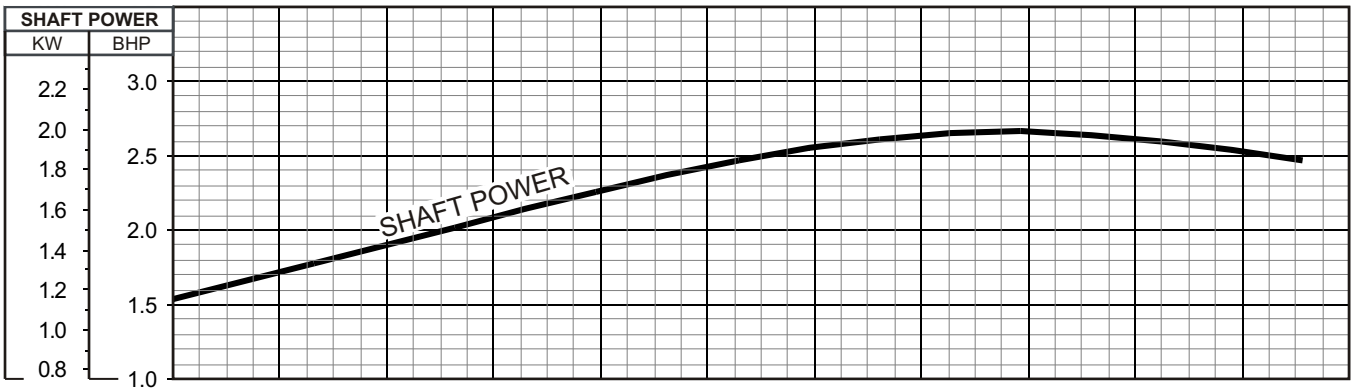

CONFORMED

TSURUMI PUMP

NK - SERIES
SEMI-VORTEX - DEWATERING PUMPS

DIMENSIONS

NK2-22L

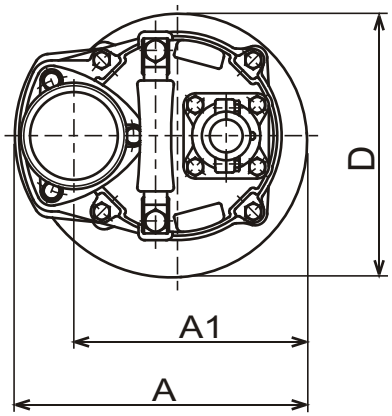

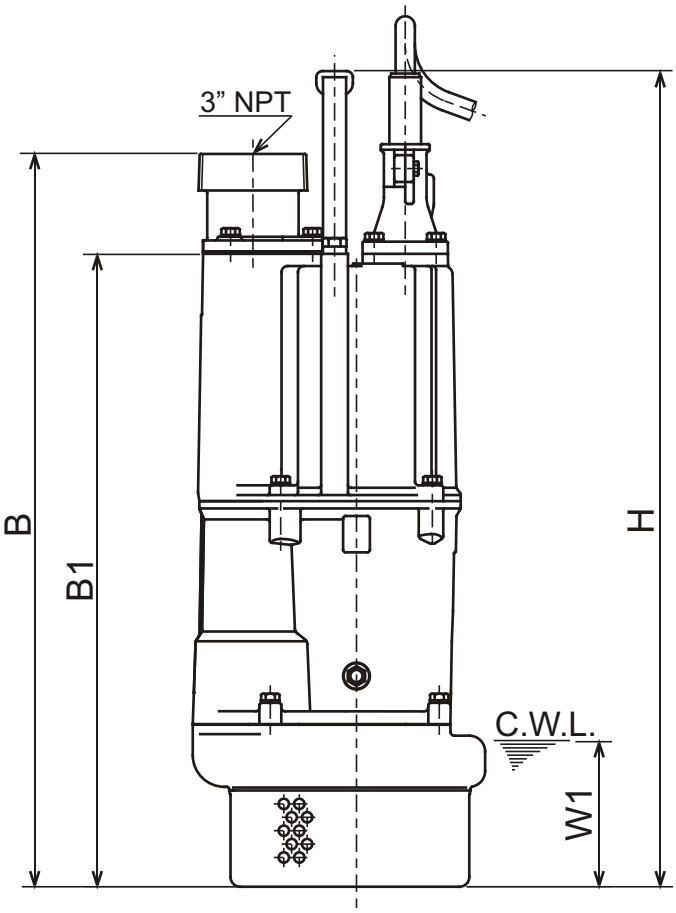

C.W.L. : Continuous running Water Level

DIMENSIONS:USCS (Inch)

Model	HP	NOM. SIZE	Pump & Motor						C.W.L.	Wt.
			A	A1	B	B1	D	H	W1	(lbs.)
NK2-22L	3	3"	9 1/4	7 1/2	23 5/8	20 3/8	8 1/2	26 1/2	4 3/4	73

DIMENSIONS:METRIC (mm)

Model	kW	NOM. SIZE	Pump & Motor						C.W.L.	Wt.
			A	A1	B	B1	D	H	W1	(kg)
NK2-22L	2.2	80	235	192	601	519	216	669	120	33.0

CONFORMED

PRODUCT DATA SHEET
January, 2007

EZ CLEAN TANK

GENERAL INFORMATION

Vapor tight steel tank with two sealed top access hatches and pressure/vacuum relief valve. Smooth interior walls for easy cleaning.

WEIGHTS AND MEASURES

» Capacity:	500 BBL (21,000 gal.)
» Height:	12′-4″
» Width :	8′-0″
» Length:	37′-6″ (40′-0″ incl. stairway)
» Weight:	26,000 lbs.

STRUCTURAL DESIGN

» Floor:	¼" thick ASTM A36 carbon steel, "V" shaped bottom
» Sides/Ends:	¼″ thick ASTM A36 carbon steel
» Roof Deck:	¼″ thick ASTM A36 carbon steel
» Wall Frame:	4″x4″ steel tubing (on exterior of wall surfaces)
» Floor Frame:	4″x4″ steel tubing (on exterior of floor surface)
» Roof Frame:	4″x4″ steel tubing (on exterior of roof surface)
» Internal Cross Bracing:	(3) - 2" sch. 80 pipes
» Skid Rails:	4″ x 4″ steel tubing

FEATURES

» Valves:	Typically 1-4″ butterfly valve on front end and1-6″ butterfly valve on rear end
» Relief Valve:	16 oz./in^2 pressure setting, 0.4 oz./in^2 vacuum setting; Buna-N seal
» Roof Piping Connection:	1-4″ 150# flanged (blinded) connection, driver side on rear end
» Misc. Pipe Connections:	Typically 1-4″ nipple with cap on front end below poop deck and 1-2″ collar with plug on top deck

FEATURES – cont.

» Top Access Hatches:	2-30″x45″ hinged vapor-proof hatches
» Hatch and Manway Seals:	Neoprene gasket
» End Manway:	1-20″ diameter end hatch (front end)
» Exterior Stairway:	Rear end of tank – lower section folds for extension and retraction
» Guardrails:	Around top deck; fold-down
» Internal Ladder:	Nearest manhole to stairway
» Bottom Sump:	One on each end of tank, either flat bottomed, 12″ diameter, 3″ deep, or domed, 14″ diameter, 4″ deep
» Level Gauge:	Ball float style, 2-8″ 304 SS floats
» Rear Wheels:	Removable dolly (not a fixed axle)

SURFACE DETAILS

» Exterior Coating:	High Gloss Polyurethane
» Interior Coating:	Chemical resistant coating (SS float balls are not coated)
» Safety Paint:	Safety yellow on all moveable safety equipment, handrails, stairs etc.

TESTS/CERTIFICATIONS

» Test Performed:	Major repairs – hydrotest Scheduled- Level I, II and III inspections, including NESHAP testing

CONFORMED

BAKERCORP™

To the best of our knowledge the technical data contained herein are true and accurate at the date of issuance and are subject to change without prior notice. No guarantee of accuracy is given or implied because variations can and do exist. NO WARRANTY OR GUARANTEE OF ANY KIND IS MADE BY BAKERCORP, EITHER EXPRESSED OR IMPLIED.

3020 OLD RANCH PARKWAY • SUITE 220 • SEAL BEACH, CA • 562-430-6262

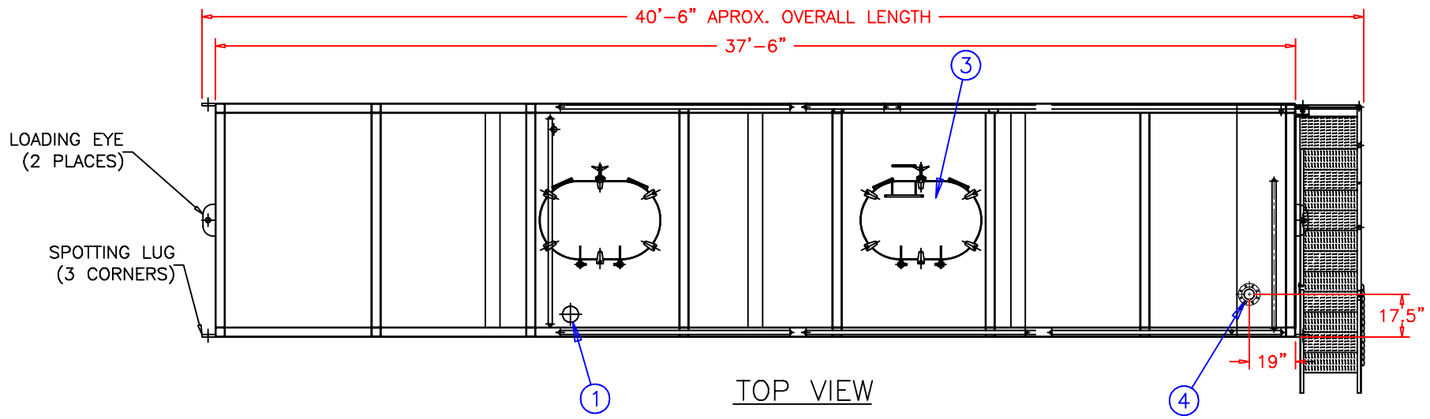

TOP VIEW

ITEM	QTY	DESCRIPTION
1	1	PRESSURE/VACUUM RELIEF VALVE
2	2	4" BUTTERFLY VALVE (SEE NOTE 1)
3	2	HINGED VAPOR PROOF HATCH
4	2	6" FLANGE WITH BLIND FLANGE (SEE NOTE 1)
5	1	LEVEL POINTER
6	1	OSHA COMPLIANT STAIRWAY & RAILS
7	1	OSHA COMPLIANT GUARD RAILS
8	1	20" END HATCH
9	1	4" x 4" STRUCTURAL TUBING FRAME, TYPICAL
10	1	INTERNAL LADDER

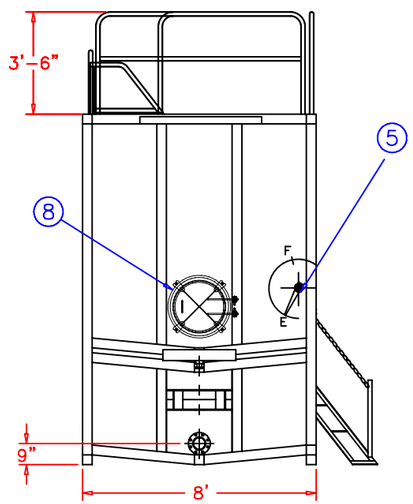

TRACTOR END

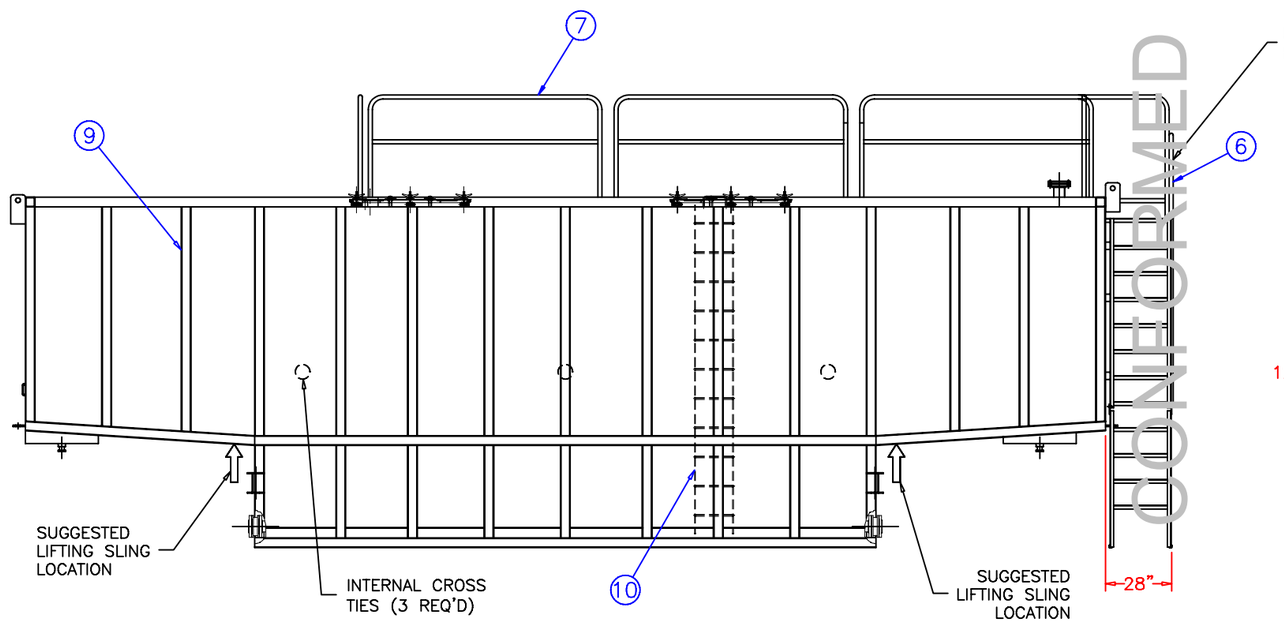

SIDE VIEW

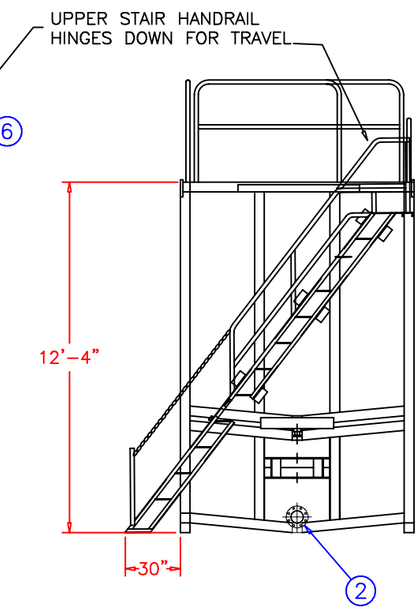

DOLLY END

SPECIFICATIONS:

1) Tank Capacity: 21,000 gallons (500 BBL)
2) Tank Weight: 26,000 lbs. (empty)

NOTES:

1. This drawing is a baseline representation for this model of tank. Variations between this drawing and the actual equipment in the field can and do exist, primarily with appurtenance locations, sizes and quantities. Consult your local BakerCorp representative if specific needs exist.
2. THIS TANK IS *NOT DESIGNED FOR TRANSPORTING LIQUIDS*. It should be moved only when empty.
3. Tanks of this type have an internal lining (coating) on the wetted surfaces.
4. This tank is equipped with a pressure/vacuum relief valve set at 1.0 1bs/sq. in. pressure and 0.4 oz/sq.in. vacuum.

The information contained herein is proprietary to BakerCorp and shall not be reproduced or disclosed in whole or in part, or used for any design or manufacture except when user obtains direct written authorization from BakerCorp.

REV.	DESCRIPTION	DATE	BY
G			
F			
E			
D			
C			
B			
A	ADDED HIDDEN LINES / LIGHTENED HANDRAILES	7/12/05	Z.E.R

BAKERCORP™
3020 OLD RANCH PARKWAY
SEAL BEACH, CA 90740-2751

SCALE:	SIZE B	ORIGINAL DWG. DATE 25FEB02
DRAWN BY: A. R.	APPROVED BY: –	CAT/CLASS ––
TITLE EZ CLEAN VAPOR–TIGHT		SHEET 1 OF 1
DRAWING NO. S-1-M0007-1-		REV. A

VCC 8x30 Virgin Coconut Shell Carbon

BakerCorp's VCC 8x30 mesh virgin carbon made from select grades of coconut shell. These activated carbon granules are a uniform adsorbent with well developed pore structure, allowing for a wide range of adsorbate retention. This carbon is ideal for purification of potable water, industrial wastewater treatment and groundwater treatment. This product is also suitable for refinement of organic liquids requiring purification and color reduction, such as amine and glycol solutions and will remove MTBE from groundwater.

PHYSICAL PROPERTIES:

Carbon Tetrachloride Activity:	60% minimum
Apparent Density (lbs./cu.ft.):	29 average
Total Ash Content:	3% maximum
Hardness (Ball Abrasion):	98% minimum
Iodine Number:	1,000 minimum
Moisture (as packed):	5% maximum
Mesh Size:	8x30

Standard Packaging: 1000 lb. super sacks. Other packaging available upon request.

These specifications represent general parameters and are subject to change. Please consult with BakerCorp before processing with your applications.

CONFORMED

4306 W. 190th Street, Torrance, California 90504
Phone: 310.303.3700 ♦ Fax: 310.406.3001

PRODUCT DATA SHEET

April, 2007

3" 304 S.S. BAG / CARTRIDGE FILTER SYSTEM

GENERAL INFORMATION

Two parallel-piped bag filters are followed by a single cartridge filter (can be converted to hold a single #2 bag instead) and are mounted on a forkliftable skid. Housings are not ASME code stamped. Different bag and cartridge elements are available depending on job requirements and should be specified by the customer prior to use.

WEIGHTS AND MEASURES

» Capacity*:	100 gpm (2 bag/ 1 cartridge) 200 gpm (3 bags, 5 microns and up) 300 gpm (parallel flow w/5 micron bags)
» Design Press:	150 psig
» Design Temp:	225°F max.
» Height:	5'-1" (overall)
» Width:	4'-0"
» Depth:	6'-2"
» Weight:	1175 lbs. (approx.)

*Capacity (flowrate) depends on factors such as liquid viscosity, micron value of the filter media, solids loading etc. Assuming a 10 micron rating, the clean pressure drop through the bag filter would be 2-3 psi and the drop through the cartridge about 2 psi additional. Lowering the micron rating of the cartridge below 10 will increase the drop into the 4-6 psid range. Cartridges are normally spent at 24-28 psid.

SKID DESIGN

» Skid:	2"x2" and 2"x4" c.s. structural tubing
» Vessel Mount:	Legs are attached to cross supports on skid
» Forklift Pockets:	Through front and rear framing channels (Each pocket is 21" wide)

FILTER DESIGN

» Assembly Number:	Krystil Klear L88(CL)303FA41523F4DF
» Vessel Covers:	Three eye nuts; hinged for easy access
» Piping:	3" Sch. 40 304 SS (SA-312-304)
» Inlet & Outlet:	3" Male Cam Lock
» Cartridge Elements:	6 required; Double Open End, 2-1/2" o.d. and 30 inches long; typically polyester or polypropylene string wound; 0.5 micron range and up.
» Bag Elements:	One size #2, 7-1/16" snap ring & 30" length required in each housing; Available fibers range from 1 to 1500 microns.
» Lid Seals:	Buna N
» Valves:	3" 150" butterfly with Buna packing
» Internal Hardware:	*Bag Filter*: 316 SS strainer basket with 9/64" perforations, 30" deep. 6.7" dia. *Cartridge Filter*: 316 SS center guide post, cup & spring assemblies

TESTS / CERTIFICATIONS

» Test Performed:	OEM Hydrotested @ 195 psi. Scheduled QMS inspections after purchase by BakerCorp.

CONFORMED

BAKERCORP™

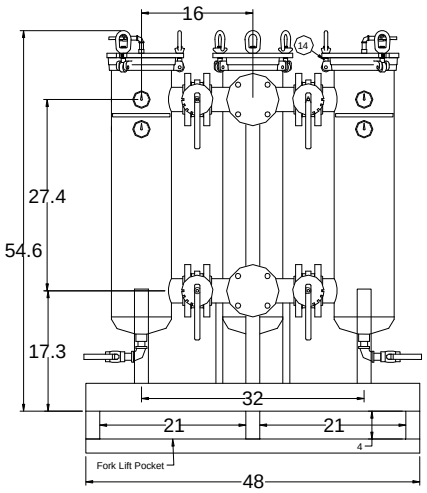

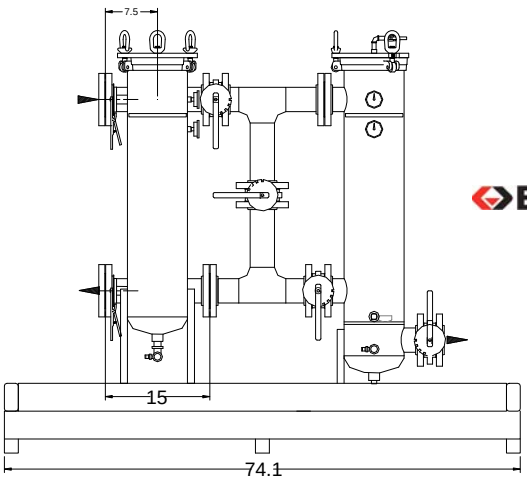

BAKERCORP™

To the best of our knowledge the technical data contained herein are true and accurate at the date of issuance and are subject to change without prior notice. No guarantee of accuracy is given or implied because variations can and do exist. NO WARRANTY OR GUARANTEE OF ANY KIND IS MADE BY BAKERCORP, EITHER EXPRESSED OR IMPLIED.

3020 Old Ranch Parkway • Suite 220 • Seal Beach, CA • 562-430-6262

PRODUCT DATA SHEET
January, 2007

FLIP TOP WEIR TANK
(VE ENTERPRISES VERSION)

GENERAL INFORMATION

This fixed-axle tank is fitted with two internal weirs and 14 top inspection doors.

WEIGHTS AND MEASURES

» Capacity:	20,000 gallons
» Height:	8'-6¼" (grade to tank roof) 12'-8½" (grade to top of handrails when up)
» Width :	8'-6"
» Length:	45'-7½" (tank only), 50'-0" (nose-to-bumper)
» Weight:	33,000 lbs.

STRUCTURAL DESIGN

» Floor:	¼" ASTM A36 carbon steel. "V" bottom sloping from each side to centerline of tank
» Sides/Ends:	¼" ASTM A36 carbon steel, corrugated shape
» Roof Deck:	¼" ASTM A36 carbon steel
» Wall Frame:	Corrugations only, no internal frame
» Internal Weirs:	Two internal steel weirs equally spaced to create three compartments inside tank. Overflow weir (forward weir) extends from floor up to one foot from top of tank. Underflow weir extends down from roof and terminates one foot from floor seam at sidewalls. Designed for 16 lbs. per gallon liquid on one side of weir and no liquid on the other side.

FEATURES

» Relief Valve:	None
» Valves:	(2) 4" wafer style butterfly valve, Bray series 30 or equivalent, with cast iron body, Buna-N seat and seals, 316 SS stem, Nylon 11 coated ductile iron disk

FEATURES – cont.

» Fill Line:	One 3-inch schedule 40 ASTM A106B pipe with cap and securing chain. Line enters front of tank near top with dip tube into first compartment down approx. halfway from bottom of tank where it 90° elbows into compartment.
» Front Drain:	One 4" wafer style butterfly valve. Mounted on 150# weld neck flange on tank side and 150# FPT flange on outside with plug and chain.
» Rear Drain:	One 4" wafer style butterfly valve. Mounted on 150# weld neck flange on tank side and 150# FPT flange on outside with plug and chain. Remote-operation handle.
» Rear Process Outlet:	One (1) 4" flanged and blinded nozzle 18" below roof deck
» Top Doors:	14- 51"x39"x10ga plate lids
» Manways:	Three (3) 22" diameter, passenger side
» Manway Seals:	Buna-N (NBR)
» Stairway:	OSHA compliant non-slip stairway with handrails and guardrails
» Walkway:	Full length of tank with guardrails on both sides; door handles accessible

SURFACE DETAILS

» Exterior Coating:	High gloss polyurethane
» Interior Coating:	Chemical resistant lining

TESTS/CERTIFICATIONS

» Test Performed:	100% water-tested to full capacity by OEM, plus level 1, 2 &3 QMS inspections by Baker Tanks

CONFORMED

BAKERCORP™

To the best of our knowledge the technical data contained herein are true and accurate at the date of issuance and are subject to change without prior notice. No guarantee of accuracy is given or implied because variations can and do exist. NO WARRANTY OR GUARANTEE OF ANY KIND IS MADE BY BAKERCORP, EITHER EXPRESSED OR IMPLIED.

3020 Old Ranch Parkway • Suite 220 • Seal Beach, CA • 562-430-6262

ITEM	QTY	DESCRIPTION
1	3	22" diameter manway
2	2	4" drain conn. w/butterfly valve
3	1	Stairway assembly
4	1	Walkway with handrail
5	14	Flip top door plates
6	14	Door plate handles
7	1	3" fill line
8	1	4" nozzle
9	5	Brace assembly
10	2	Weir plate

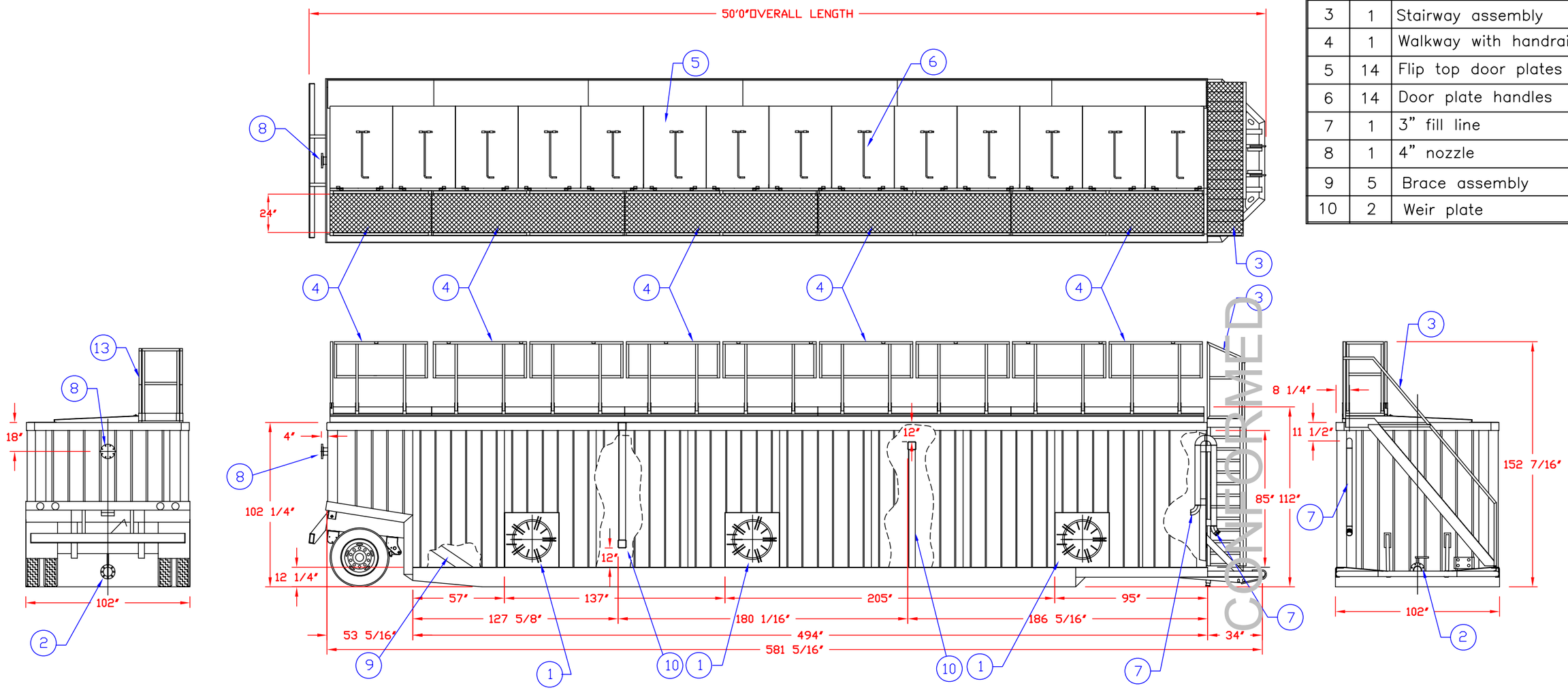

SPECIFICATIONS:

1) Tank Capacity: 20,000 gallons (476 BBL)
2) Tank Weight: 33,000 lbs. (empty)

NOTES:

1. This drawing is a baseline representation for this model of tank. Variations between this drawing and the actual equipment in the field can and do exist, primarily with appurtenance locations, sizes and quantities. Consult your local BakerCorp representative if specific needs exist.
2. THIS TANK IS *NOT DESIGNED FOR TRANSPORTING LIQUIDS*. It should be moved only when empty.
3. Tanks of this type have an internal lining (coating) on the wetted surfaces.
4. This tank is constructed from A36 carbon steel.

The information contained herein is proprietary to BakerCorp and shall not be reproduced or disclosed in whole or in part, or used for any design or manufacture except when user obtains direct written authorization from BakerCorp.

REV.	DESCRIPTION	DATE	BY
G			
F			
E			
D			
C			
B			
A	FIXED CUTAWAYS / LINEWEIGHT	7/12/05	Z.E.R

BAKERCORP™
3020 OLD RANCH PARKWAY
SEAL BEACH, CA 90740-2751

SCALE: DO NOT SCALE	SIZE B	ORIGINAL DWG. DATE 16JUL02
DRAWN BY: P.J.B.	APPROVED BY:	CAT/CLASS --
TITLE VE ENTERPRISES FLIP TOP WEIR TANK		SHEET 1 of 1
DRAWING NO. S-2-M0005-1-		REV. A

Attachment D
Typical Specifications for 700 Gallon Per Minute Temporary Groundwater Treatment Plant

NOTE: All equipment brands depicted herein shall be
considered as "typical" and are provided for reference purposes,
with "or equivalent" applicable to all equipment.

CONFORMED

PRODUCT DATA SHEET

March, 2007

D-KLEEN.WATER 10K

GENERAL INFORMATION

This system is designed for continuous aqueous phase treatment of groundwater or wastewater, and has the ability to remove contaminants to non-detectable levels. The influent stream may be drawn in through the system in either series or parallel flow, and can operate on one vessel only while the other is in backwash mode. BakerCorp can provide a number of service and disposal options for the spent media,

WEIGHTS AND MEASURES

» Max. Flowrate:	Up to 600 gpm in series or 1200 gpm in parallel (application dependent)
» Max. Pressure:	100 psi
» Max. Temp:	150°F
» Height:	10′-6″ (overall)
» Width:	8′-0″ (skid)
» Length:	25′-0″ (skid)
» Diameter:	96″ (each vessel)
» Shipping Wt.: (empty)	40,000 lbs.(equipment – 20,000 lbs; activated carbon – 20,000 lbs)
» Operating Wt.:	80,000 lbs. (including 40,000 lbs. water)

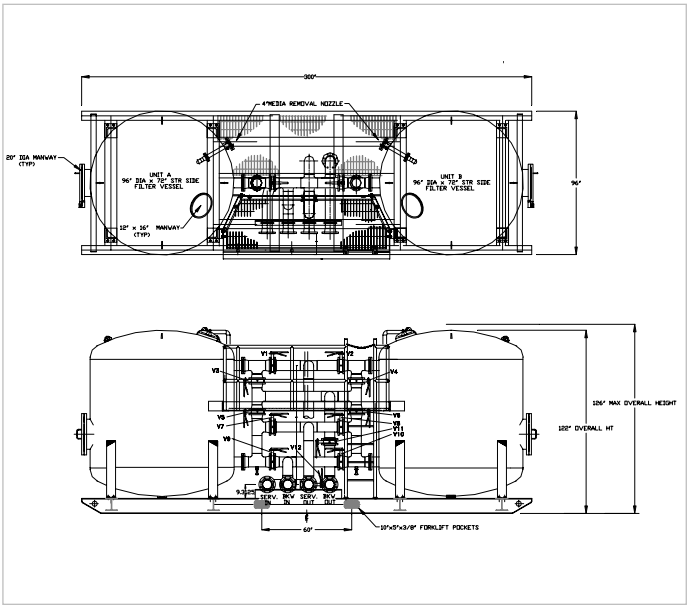

FILTER MEDIA

» Types:	▪Activated Carbon ▪Organoclay ▪Ion Exchange Resin ▪Specialty Media
» Volume:	320 cu. ft per vessel (640 cu. ft. total)
» Weight:	~10,000 lbs. each vessel (20,000 lbs. total)

MISCELLANEOUS DATA

» Vessel Code:	ASME Code stamped for 100 psi @ 150°F.
» Service In/Out:	6″ Flanged connection w/ sch. 40 piping
» Backwash In/Out:	6″ Flanged connection w/ sch. 40 piping
» Manifold Valves:	6″ Lever-operated cast iron butterfly
» Media Removal:	4″ top-mounted nozzle with draw connection at grade
» Internals:	Lower Underdrain: 6″ header/2″x1″ drop strainer type constructed of 316 SS Upper Distributor: 6″ header/3″ open end riser type constructed of 316 SS
» Platform:	Galvanized grating with perimeter guardrails
» Vessel Interior Access:	Top manway – 12″x16″ elliptical Side manway – 20″ round
» Manway Gaskets:	Neoprene
» Interior Coating:	Polyamine epoxy coating

PRESSURE DROP DATA & OPTIONS AVAILABLE

Contact BakerCorp

NOTE:

1. Wet activated carbon preferentially removes oxygen from air. In closed or partially closed containers and vessels, oxygen depletion may reach hazardous levels. If workers are to enter a vessel containing carbon, appropriate procedures for potentially low oxygen spaces must be followed, including all federal and state requirements.

CONFORMED

BAKERCORP™

To the best of our knowledge the technical data contained herein are true and accurate at the date of issuance and are subject to change without prior notice. No guarantee of accuracy is given or implied because variations can and do exist. NO WARRANTY OR GUARANTEE OF ANY KIND IS MADE BY BAKERCORP, EITHER EXPRESSED OR IMPLIED.

3020 Old Ranch Parkway • Suite 220 • Seal Beach, CA • 562-430-6262

PRODUCT DATA SHEET

January, 2007

YARDNEY 4-POD SAND FILTER

(Equip. # SFL21988 and earlier)

GENERAL INFORMATION

Skid mounted high rate automatic backwashing sand media filter (4 tanks (pods)) designed for general-purpose water filtration of organic and inorganic solids (Yardney Model # IL5424-4AS2). Powered by 110 V external power supply, or battery with solar cell recharge for remote operation.

WEIGHTS AND MEASURES

» Capacity:	504 – 756 gpm (Normal flow range) 1000 gpm (Peak flow)
» Design Press:	80 psi maximum
» Temperature:	Limit to ambient. Consult BakerCorp if temperature exceeds 100 degrees.
» Filtration:	To 50 microns
» Height:	8'-11" (overall)
» Width :	6'-3"
» Length:	20'-1"
» Weight:	6,326 lbs. – equipment only 14,500 lbs. – media only 28,000 lbs. - operational
» Backflush:	240 gpm, automatic

OPERATING REQUIREMENTS

» Compressed Air:	5 cfm minimum at 60 psi **[Note: external air supply required]**
» Sand Media:	Crushed silica, 0.47MM (#80 grit)
» Gravel Media:	#3 crushed rock, ½" x ¾"
» Input Power:	Selectable input power of customer supplied 110 V AC, or 12V DC from a unit mounted solar package.
» Output Power:	12V DC

FEATURES

» System Controller:	Automatic Filter Controller. Flush activation based on elapsed time and/or pressure differential.
» Piping:	Inlet & outlet pipe is 6" A53B, 3/16" wall; weld fittings are A234; flanges are A106. Backflush piping is 4" schedule 40 PVC.
» Solar Panel:	Uni-Solar Model UA-5 (5 watts) module.

FEATURES – con't

» Press. Gauge:	2" face, ¼" NPT bottom connection, stainless steel case, plexiglass lens, brass bourdon tube, 0-100 psi range.
» Flowmeter:	Six-inch propeller type meter, AWWA C704-92 compliant. Instantaneous flowrate indicator and six-digit totalizer. Accuracy is ±2% of reading. Repeatability of 0.25%. Rated at 90-1200 gpm, 150 psi, 160°F. Tube: epoxy-coated carbon steel; Impeller: high-impact plastic.
» Butterfly Valves:	Effluent / Influent: 6" with cast iron body (epoxy coated), EPDM seat, 304 SS stem and aluminum bronze disc. Tank Isolation: 4" grooved ends, EPDM disc coating
» Ball Valves:	Four-inch, bronze body and brass ball; seat is carbon/glass-filled PTFE. ¼ turn open or close.
» Solenoid Valve:	12V DC, normally closed type 7121V (energizing opens valve).
» Differential Press. Switch:	0-30 psid. Two-inch dial, plated steel case, ±3% accuracy.
» Air / Vacuum Release Valve:	2" Bernard Model 4415 valve, mounted on backwash, influent and effluent lines
» Battery:	Sealed rechargeable lead-acid, 12V, NP2.6-12
» Battery Charger:	Power-Sonic Model PSC-12500A, 12 volts.
» Tubing:	Pressurized – ¼" 304 ss w/ Hoke fittings; Drain - ¼" polypropylene; Vent – schedule 80 PVC

SURFACE DETAILS

» Interior Coating:	3M Skotchkote 134
» Exterior Coating:	High Gloss Polyurethane

TESTS/CERTIFICATIONS

» Tests Performed:	OEM pressure tested. BakerCorp performs scheduled QMS inspections.

CONFORMED

BAKERCORP™

To the best of our knowledge the technical data contained herein are true and accurate at the date of issuance and are subject to change without prior notice. No guarantee of accuracy is given or implied because variations can and do exist. NO WARRANTY OR GUARANTEE OF ANY KIND IS MADE BY BAKERCORP, EITHER EXPRESSED OR IMPLIED.

3020 Old Ranch Parkway • Suite 220 • Seal Beach, CA • 562-430-6262

PRODUCT DATA SHEET

March, 2008

8" 304 STAINLESS STEEL 12-BAG FILTER SYSTEM

GENERAL INFORMATION

Single vessel mounted on a forkliftable skid. Housing is not ASME code stamped. Different filter elements are available depending on job requirements and should be specified by the customer prior to use.

WEIGHTS AND MEASURES

» Capacity*:	1200 – 2000 gpm (@ 1 micron and up)
» Design Press:	150 psig
» Design Temp:	225°F max. (gasket dependent)
» Height:	7'-5" (overall)
» Width:	4'-11"
» Depth:	7'-5"
» Weight (dry):	1075 lbs. (approx.)

*Capacity (flowrate) depends on factors such as liquid viscosity, micron value of the filter media, solids loading etc. Assuming water as a filtrate and factoring in pressure drop only, 2000 gpm is a practical upper limit for a size #2 bag with a 100 micron rating; 1200 gpm with 1-micron rated bags.. Clean pressure drop would be 2-3 psi. Lowering the micron rating increases the pressure drop. The minimum pressure drop for this unit at higher micron ratings is 1-2 psi. Filter bags should be changed out at 15-18 psid, or earlier if the process requires it.

SKID DESIGN

» Skid:	2"x2"x0.25" A36 c.s. structural tubing
» Vessel Leg Supports:	3x3x.375 angle, SA-36
» Forklift Pockets:	Through front and rear framing channels

FILTER DESIGN

» Assembly Number:	Krystil Klear LR12-36-30-8F-A-4-15-SP
» Top Head:	(17) closure bolts and nuts with davit lift assembly. 36" O.D., 0.25" thk, SA-240 Gr. 304 stainless steel
» Shell:	36" O.D., 0.25" thick x 28" L . R & T, SA-240 Gr. 304 stainless steel
» Inlet & Outlet:	8" 150# RFSO flanges, SA-182 Gr. 304 S.S.
» Bag Elements:	12 required: size #2, 7-1/16" snap ring & 30" length required; Available fibers range from 1 to 1500 microns.
» Lid Seal:	Buna N O-ring
» In/Out Valves:	8" 150" butterfly with Buna seat
» Internal Hardware:	SA-240 Gr. 304 S.S. tube sheet

TESTS / CERTIFICATIONS

» Test Performed:	OEM Hydrotested @ 195 psi. Scheduled QMS inspections after purchase by BakerCorp.

CONFORMED

BAKERCORP™

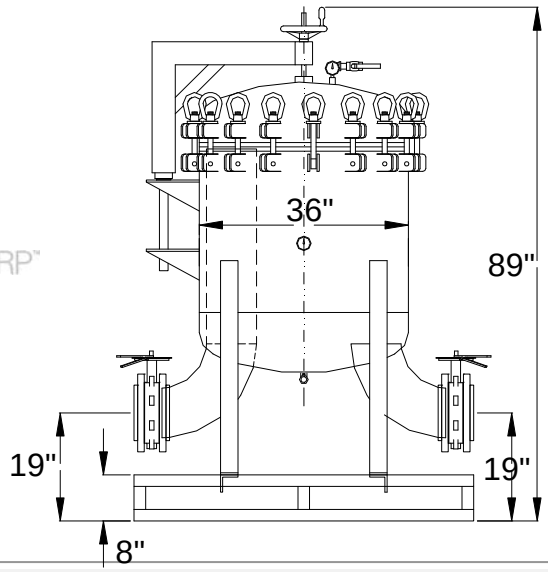

BAKERCORP™

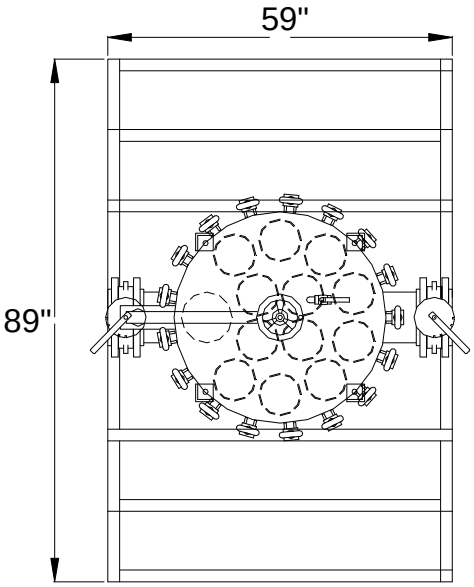

To the best of our knowledge the technical data contained herein are true and accurate at the date of issuance and are subject to change without prior notice. No guarantee of accuracy is given or implied because variations can and do exist. NO WARRANTY OR GUARANTEE OF ANY KIND IS MADE BY BAKERCORP, EITHER EXPRESSED OR IMPLIED.

3020 Old Ranch Parkway • Suite 220 • Seal Beach, CA • 562-430-6262

PRODUCT DATA SHEET

1/4/2012

BP44LS-GD66AT

BakerPrime 4x4 Low Pressure Solids Handling Unit (Attenuated, Trailer)

GENERAL INFORMATION

The compressor/venturi priming system uses a compressor to blow compressed air through a jet into a tapered tube to create a vacuum on the suction.

PERFORMANCE DATA

» Flow (min/max):	-	60 gpm / 925 gpm
» Minimum Shutoff Head:	-	87 feet (38 psi) @ 1550 rpm (1)
» Maximum Shutoff Head:	-	152 feet (66 psi) @ 2100 rpm (1)
» Minimum Speed:	-	1550 rpm
» Maximum Speed:	-	2100 rpm
» Maximum Suction Lift:	-	25 feet (2)
» Maximum Casing Press:	-	99 psi
» Maximum Temperature:	-	160°F (7)
» Maximum Solids Size:	-	3" spherical diameter

PUMP SPECIFICATIONS

» Impeller:	-	9.75"
» Bearing Lubrication:	-	SAE No. 30 Oil
» Vacuum System:	-	8.5 cfm Compressor/Venturi
» Mechanical Seal Lube:	-	SAE No. 30 Oil (3)

PHYSICAL SPECIFICATIONS

» Suction Size:	-	4" flange
» Discharge Size:	-	4" flange
» Approximate Weight:	-	5223 lbs dry / 5720 lbs wet
» Overall Height:	-	89" (to top of lifting eye)
» Overall Width:	-	63" (outer most edges)
» Overall Length:	-	137" (nose to tail)

Enclosure

> Enclosure is made from Galvaneal. Hinged doors on each side provide easy interior access for servicing. Soundproof insulation provides the quietest operation in the industry, and the entire unit, including controls, can be locked for added security.

» Sound Rating:	-	67 dBA at 23 feet

BakerCorp Reference # 404-0105

MATERIAL SPECIFICATIONS

» Pump Casing:	-	Gray Iron No. 30
» Shaft Sleeve:	-	17-4 PH S.S.
» Wear Rings:	-	Carbon Steel No. 1018
» Mechanical Seal Faces:	-	Silicon-Carbide/Silicon-Carbide
» Pump Shaft:	-	Alloy Steel No. 4140
» O-rings:	-	Buna-N
» Impeller:	-	Ductile Iron No. 4140
» Check Valve Body:	-	Gray Iron No. 30
» Check Valve Flapper:	-	Buna-N

ENGINE SPECIFICATIONS

» Engine Make/Model:	-	Deere 4024H
» Total Displacement:		2.4 Liter
» Aspiration:	-	Turbocharged
» Max. Continuous BHP:	-	66 @ 2400 rpm (4)
» Crankcase Oil:	-	SAE 10W40 (5)
» Coolant:	-	50/50 Water/Antifreeze
» Safety Shutdowns:	-	High Water Temp & Low Oil Pressure
» Fuel Consumption:	-	2.78 gal/hr @ 1800 rpm (6)
» Run Time:	-	25 hours at 1800 rpm at 80% Engine Load
» Fuel Capacity/Type:	-	70 gal of No. 2 diesel
» Number of Cylinders:	-	Four

Notes:

(1) Based on 1.0 specific gravity

(2) Depends on flow rate, pump speed, and elevation. See performance curve.

(3) Should always be visable and clear in appearance thru sight glass.

(4) WARNING – this is the rated speed for the ENGINE ONLY. The rated speed of the pump is less. See curve for max pump RPM.

(5) Must be changed every 250 hours of runtime.

(6) Run time fluctuates with speed and engine loads.

(7) Equipment material limitation. Lower max temperature may be necessary due to application conditions and pump NPSH requirements.

CONFORMED

To the best of our knowledge the technical data contained herein are true and accurate at the date of issuance and are subject to change without prior notice. No guarantee of accuracy is given or implied because variations can and do exist.

NO WARRANTY OR GUARANTEE OF ANY KIND IS MADE BY BAKERCORP, EITHER EXPRESSED OR IMPLIED.

PRODUCT DATA SHEET

1/4/2012

BP44LS-GD66AT

BakerPrime 4x4 Low Pressure Solids Handling Unit (Attenuated, Trailer)

PHYSICAL SPECIFICATIONS

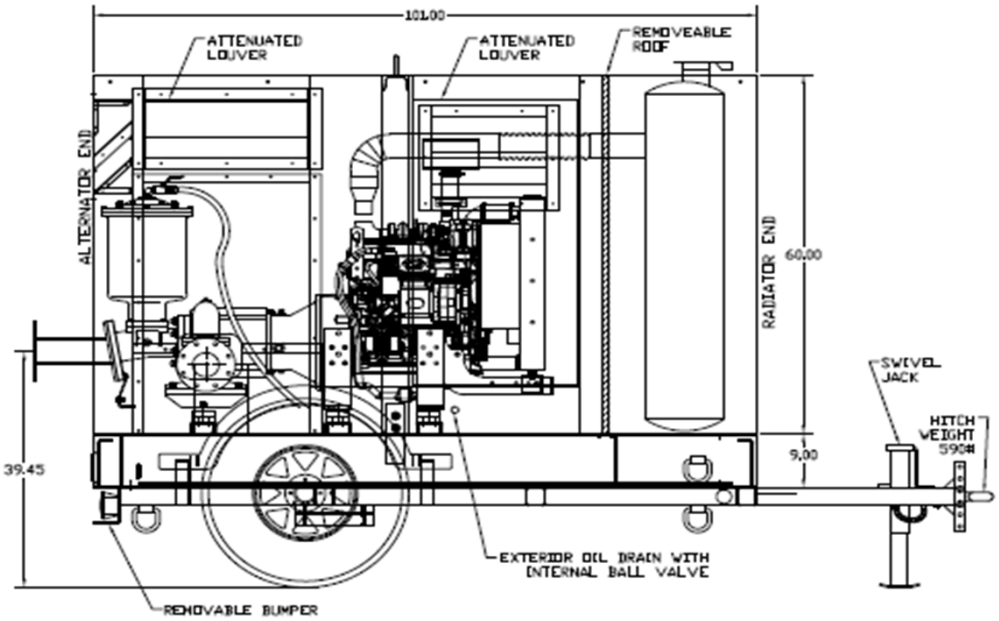

PERFORMANCE CURVE

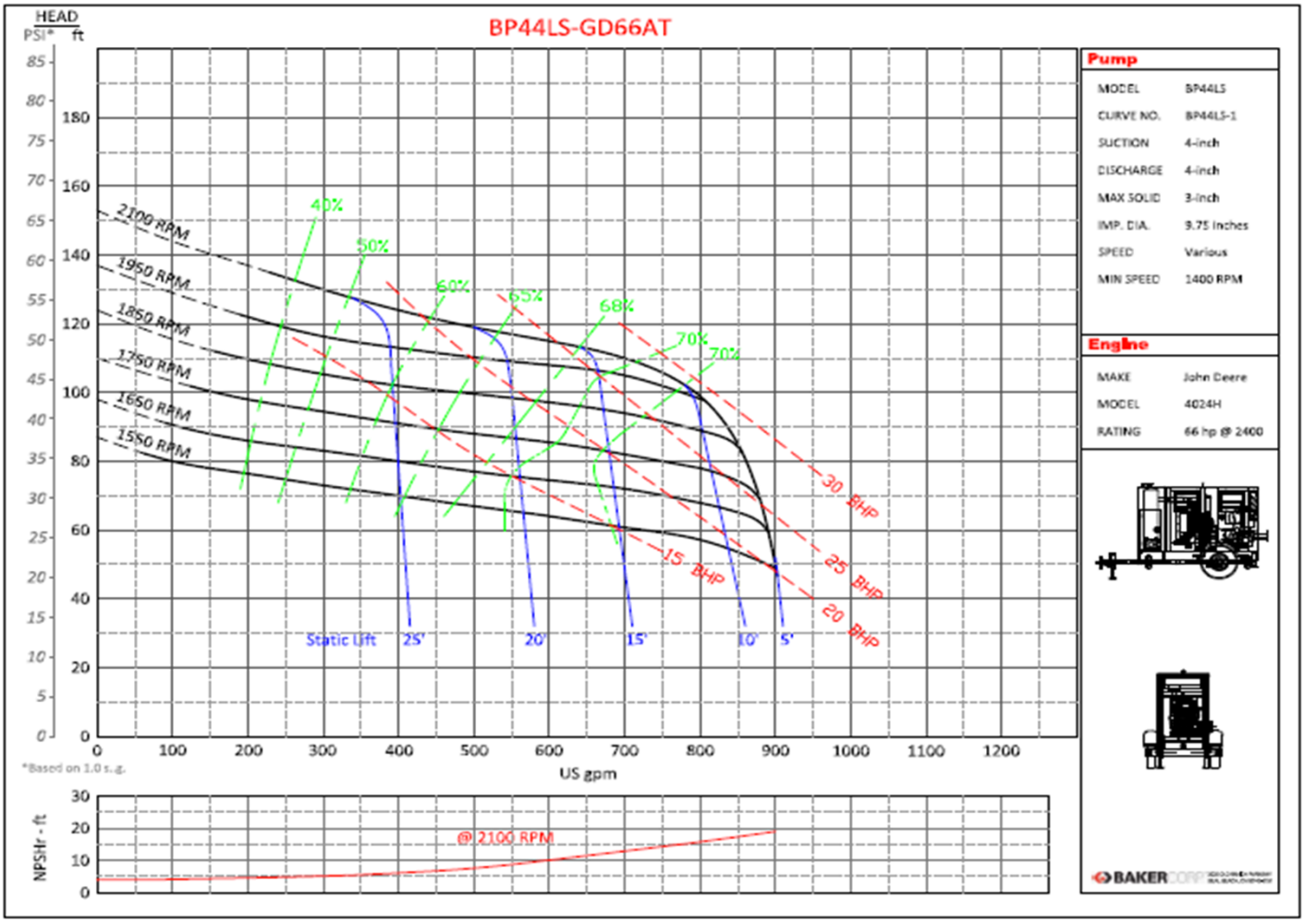

CONFORMED

PUMPS

CONFORMED

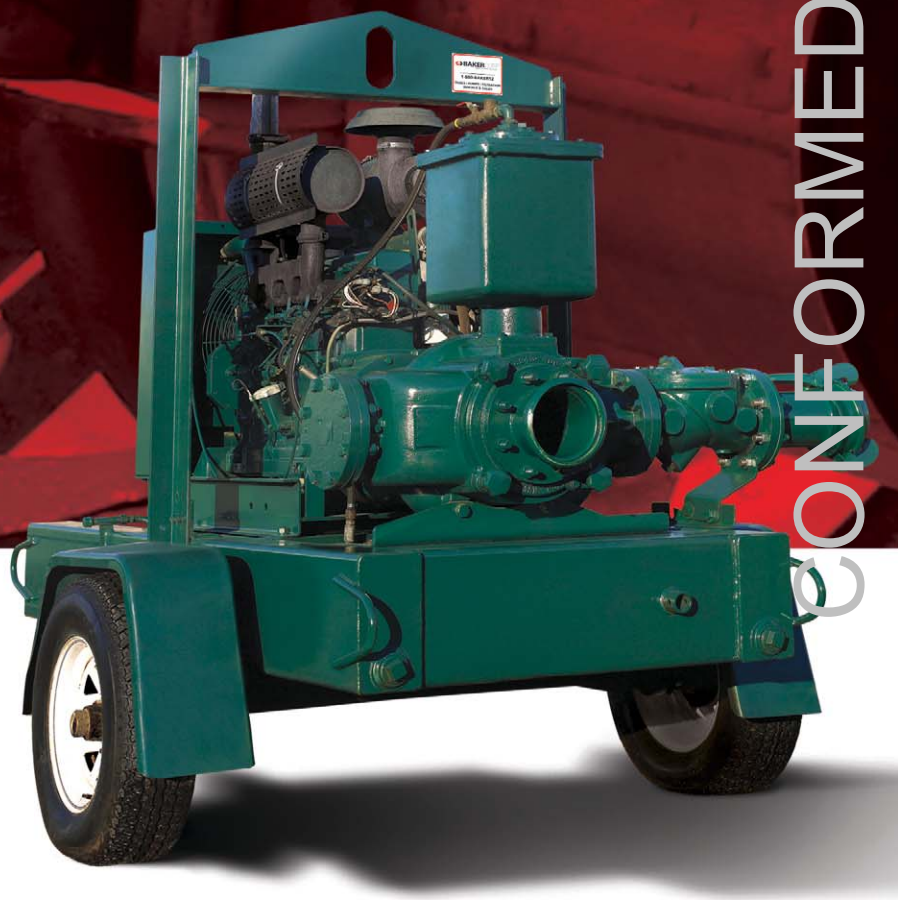

BAKERCORP™

PEOPLE. EQUIPMENT. SOLUTIONS.

TOUGH JOBS. PROVEN RESULTS.

PUMPS FROM BAKER. MAXIMUM PERFORMANCE. ZERO HASSLE.

Since 1942, BakerCorp has thrived in a very demanding business. We began by renting temporary steel storage tanks to the oilfield industry. Today, we are the largest, most experienced containment, pump and filtration company in the world with over 90 locations nationwide and international operations in Europe, Canada and Mexico. We serve a breadth of market segments including chemical, manufacturing, refining, oil and gas, construction, municipal, industrial services and environmental remediation.

BakerCorp has achieved this success by adhering to the highest standard of excellence throughout every area of our business. We stock the largest inventory of quality equipment and keep it running with the most comprehensive maintenance program in the industry. Our teams are comprised of highly-trained professionals with years of experience and vast product knowledge. Their dedication to providing customers with unparalleled, 24/7/365 personal service is constant and unwavering. From the earliest stages of your project's planning through its completion, BakerCorp will work closely with you to design the best solution based upon the specific needs of your application.

Partnering with BakerCorp on your projects means that you will work alongside professionals dedicated to providing quality solutions—integrated solutions that pull from a deep pool of talent, equipment and experience. It means that your challenges will be resolved using the most logical and comprehensive mix of tanks, pumps and filtration systems available anywhere. BakerCorp's depth of experience and reputation for innovative system design ensures your project will be brought to a successful conclusion—the first time and every time.

CONFIDENCE FOR

We know pumps. We know systems. And we know how to get the job done. Whatever the challenge—wastewater removal, flood control, sewer bypass or hydroblast pad water recirculation—you'll find BakerCorp on the job.

Nobody is better equipped than BakerCorp. We inventory an extensive fleet of the highest quality prime assist, self-prime, diesel-driven, electric drive, centrifugal and submersible pumps along with a broad range of pipe, hose and fittings. Our pumps perform at the maximum level because each pump undergoes a rigorous maintenance program completed by certified mechanics to insure the highest level of dependability before it is delivered to the jobsite.

BakerCorp offers an unbeatable combination of equipment selection and application expertise that you can rely on when you're up against a tough pumping project. Our field personnel are cross-trained to be technical experts who specialize in pumps, and nothing but. Closer to application engineers than sales people, they'll point you to solutions that will be cost-effective, labor-friendly and dependable. From system design and set-up to removal after a completed job, you can count on pumping solutions from BakerCorp.

PROVIDING PROVEN SOLUTIONS TO INDUSTRY FOR OVER 65 YEARS.

MUNICIPAL

- Sewer bypass and pipeline projects
- Lift station repair
- Temporary pumps used during sanitary sewer overflow
- Sludge pumping for wastewater lagoon clean-up

CONSTRUCTION

- Dewatering
- Temporary firewater systems
- Dust control
- River, lake and stream dredging projects

MANUFACTURING

- Liquid transfer for treatment plant projects
- Temporary pumping for stormwater runoff control
- Additional liquid transfer capacity during maintenance or repairs

REFINERIES

- Pumping for cooling tower liquids and sludges
- Hydroblast pad water recirculation
- Hydrotesting
- Portable pumps for wastewater treatment plant overloads

RENTALS, SALES AND 24/7/365 NATIONWIDE SERVICE... BAKER DELIVERS.

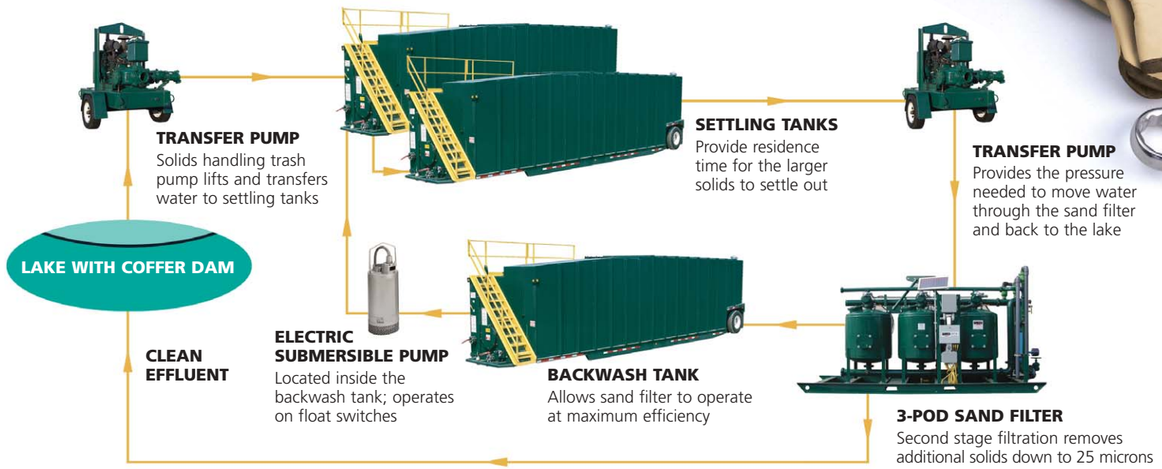

ANATOMY OF AN INTEGRATED BAKERCORP DEWATERING SYSTEM
The above diagram shows a typical dewatering system for lakeside construction. Using this system, a large volume of dirty, silty water can be pumped from inside a coffer dam and through the filtration process efficiently. The construction can then be completed inside the coffer dam while the clean effluent water is safely returned to the lake.

Our emergency response service is available 24/7/365 by field technicians that work exclusively on pumps. Their expertise in the field is unmatched and supplemented with ongoing specialized technical and mechanical training.

SETTING THE STANDARD—THE BEST MAINTAINED PUMPS IN THE INDUSTRY.

You can count on BakerCorp's vast network and inventory for immediate delivery of the highest quality pumps and systems. Our rigorous QMS maintenance program—patterned after ISO 9000 certification guidelines—helps insure consistent delivery of peak performance and dependability. Designed and tested to meet NESHAP and OSHA standards, every pump must pass up to three levels of inspection by a BakerCorp certified mechanic before release into the field.

Performance tests are conducted on the engine and pump including starting, idling and shut down operations. All seals, gaskets, valves, discharge manifolds, guards, plugs, filters, pipes, hoses and fittings are carefully checked for any breach of integrity. Fluid levels are topped off and equipment is given a final check for cleanliness and instructions for operation.

A Reputation for Excellence
Our technical sales staff's ability to accurately evaluate the needs of your project, design an effective solution and manage its timely delivery and installation is second to none.

Other team members regularly participate in Pump Application Training (P.A.T.) to keep informed of current technologies and trends.

In addition, stringent safety programs focusing on both site and product specific training help ensure that our people bring an unparalleled level of expertise to each and every job.

SEWER BYPASS

REFINERY TURNAROUND

RESIDENTIAL DEWATERING

In addition to the industry's most comprehensive pump solutions, BakerCorp's tank and filtration divisions deliver the same levels of expertise, service and quality synonymous with our pump solutions.

TANKS. NO BIGGER INVENTORY. NO BETTER SERVICE.

Nobody knows temporary containment like BakerCorp. With an unmatched inventory of tanks and accessories, we rent 17 varieties of steel tanks alone, along with poly tanks, roll off boxes, and specialty equipment.

Our unrivaled history and experience, combined with our world-class applications expertise and 24/7/365 emergency-ready support, BakerCorp gets the call on the toughest containment challenges. Our engineers analyze every aspect of your project resulting in a highly efficient solution. Then we deliver it directly to your jobsite, set it up and remove it once the project is complete.

Whatever the job—construction runoff, cooling tower cleaning, wastewater storage/treatment or environmental remediation—BakerCorp delivers.

FILTRATION. LIQUID OR VAPOR. CLEARLY SUPERIOR SOLUTIONS.

From engineered solutions to on-site services and waste management, BakerCorp provides filtration expertise in the fields of specialty media, applied science, and hazardous materials. Our scientists and engineers—with extensive knowledge of contaminants, environmental laws and regulations, hazardous material management and health and safety—enable us to customize solutions to meet exact requirements. And once in place, our on-site service technicians and waste management teams provide comprehensive support.

Whatever your needs, BakerCorp is on call, nationwide, wherever and whenever.

PUMPS

	Priming Assisted	Self Priming	High Pressure	Electric
Ideal Usage	Construction site dewatering, sewer bypass, tank cleaning, flood management, municipal projects.	Refineries, chemical facilities, waste water treatment plants, construction site dewatering.	Industrial water blasting, Pipeline pigging, irrigation, standby fire protection, environmental cleanups.	Construction and industrial applications of all types where diesel engines are not allowed or are impractical.
Benefit	Can operate in flooded conditions and pull a suction lift. Fully automatic priming. Dry-run capability.	Low maintenance. Easy access with large cleanout port. Emergency shutdown features.	Produces enough pressure to eliminate multiple pumps. Operates in flooded conditions. Unattended operation.	Clean and quiet operation. Refueling is not required.
PERFORMANCE				
Suction Size	4" – 12"	3" – 6"	4" – 10"	3" – 10"
Discharge Size	3" – 12"	3" – 6"	3" – 8"	3" – 8"
Max Flow Range	300 gpm – 6,000 gpm	450 gpm – 1,700 gpm	800 gpm – 5,200 gpm	Up to 5,200 gpm
Suction Lift	Up to 28'	Up to 28'	Up to 28'	Up to 28'
Max Shut Off Head Range	90' – 490'	112' – 171'	285' – 490'	Up to 480'
Max Solids Size	Up to 3.35"	Up to 3"	1/2" – 3.35"	Up to 3.35"
Max Operating Temp	150° F – 190° F	Up to 160° F	150° F – 175° F	Up to 160°F
Fuel	No. 2 Diesel	No. 2 Diesel	No. 2 Diesel	Electric; 115/230/460 volts
Run Time per Full Tank	Typically 24 hrs. Call for details.	Typically 24 hrs. Call for details.	8 – 24 hours	N/A
Fuel Capacity	30 gallons – 171 gallons	50 gallons – 88 gallons	60 gallons – 235 gallons	N/A
Operating Speed	1,000 rpm – 2,400 rpm	1,000 rpm – 2,200 rpm	1,000 rpm – 2,400 rpm	Typically 1,800 rpm
GENERAL INFORMATION				
Weight	2,050 lbs – 7,900 lbs	2,000 lbs – 3,900 lbs	3,300 lbs – 7,900 lbs	Less than diesel counterparts
Standard Mount	Trailer or skid	Trailer or skid	Trailer or skid	Skid
Prime Mover	Diesel engine and electric motor	Diesel engine and electric motor	Diesel engine and electric motor	Typically open drip proof motors
Casing Material	Ductile iron, cast iron and 316 stainless steel	Cast iron	Cast iron and stainless steel	Ductile iron or cast iron
Seal Type	Silicon carbide/silicon carbide or silicon carbide/tungsten carbide	Tungsten/tungsten or silicon/silicon	Silicon carbide and tungsten carbide	Silicon carbide and tungsten carbide
Safety Features	Coupling guards; high water temperature and low oil pressure shutdowns on diesel engines.	Coupling guards; high water temperature and low oil pressure shutdowns on diesel engines.	Coupling guards; high water temperature and low oil pressure shutdowns on diesel engines.	Coupling guards. Circuit breakers and overload protection in NEMA 3R enclosures.

	Electric Submersible	Hydraulic Submersible	Air Diaphragm	Sound Attenuated	Utility
Ideal Usage	Removing water and handling solids up to 3.15" when electric power source is available.	High suction lift applications such as sewer bypass jobs. Dewatering of mines, quarries and gravel pits.	Sludge and slurries, flood control and dewatering situations associated with refineries. Applications where compressed air is available.	Sewer bypass projects in residential areas. "Quiet Zones" such as hospitals or retail commercial areas.	Construction site dewatering, product transfer, emergency standby, sewage transfer, irrigation and farm use.
Benefit	Around–the–clock unattended operation. User-friendly. Quiet operation. Lower labor costs.	No suction line limitations. Unattended operation. Submerged pump head. Variable speed. No electrical requirements.	Light and portable. Adjustable flow rates. Non-stall air valves. Easy to use. Flexible. Reduces down time.	Sound enclosures significantly reduce noise. Tested to meet CPB standards.	Light and portable. Easy access to pump. Economical, maintenance-free, self-lube mechanical seal.
PERFORMANCE					
Suction Size	—	—	1"– 3"	4" – 8"	2" – 3", NPT
Discharge Size	3" – 10"	4" – 6"	1"– 3"	4" – 8"	2" – 3", NPT
Max Flow Range	100 gpm – 5,000 gpm	Up to 1,750 gpm	40 gpm – 250 gpm	150 gpm – 2600 gpm	225 gpm – 425 gpm
Suction Lift	N/A	N/A	Up to 24'	Up to 28'	Up to 20'
Max Shut Off Head Range	Up to 375'	65' – 130'	Up to 230'	Up to 195'	Up to 98'
Max Solids Size	3/8" – 4"	Up to 4"	1/4" – 2"	3"	Up to 1 1/2"
Max Operating Temp	100° F – 120° F	150° F – 190° F	212° F	160° F	150° F
Fuel	Electric; 115/230/460 volts	No. 2 Diesel (for the hydraulic power unit)	Compressed air	No. 2 Diesel	Gasoline
Run Time per Full Tank	N/A	24 hours	N/A	24 hours	Two hours
Fuel Capacity	N/A	50 gallons – 112 gallons	N/A	61 gallons – 84 gallons	1 gallon – 1.5 gallons
Operating Speed	Typically 1,800 rpm or 3,600 rpm	1200 rpm – 2200 rpm (engine speed)	N/A	1,000 rpm – 2,200 rpm	2,000 rpm – 3,600 rpm
GENERAL INFORMATION					
Weight	30 lbs – 1,500 lbs	135 lbs – 420 lbs (pump head)	79 lbs – 379 lbs	4,100 lbs – 4,700 lbs	90 lbs – 150 lbs
Standard Mount	N/A	HPU's are trailer mounted	Skid or roll cage	Skid or trailer	Roll cage
Prime Mover	Electric motor	Diesel engine/Hydraulic fluid	Air operated reciprocating diaphragm	Diesel engine	Gasoline engine
Casing Material	Cast iron, aluminum and stainless steel	Cast iron or carbon steel	Aluminum, stainless steel, and polypropylene	Cast iron or ductile iron	Aluminum
Seal Type	Tandem, oil lubricated.	Tungsten/tungsten or carbon/ Ni-hard steel	N/A	Silicon carbide and tungsten carbide	Silicon carbide; grease lubricated
Safety Features	Circuit breaker and motor overload protection in NEMA 3R enclosures.	High water temperature and low oil pressure shutdowns on diesel engines. Hydraulic system overpressure protection.	No fuel handling required. No electrical hook-ups required.	Coupling guards; high water temperature and low oil pressure shutdowns on diesel engines.	Auto shutdown on low oil level. Roll cage.

Discontinued

VISIT www.bakercorp.com FOR ADDITIONAL SPECIFICATIONS. CALL YOUR LOCAL BRANCH FOR PRODUCT AVAILABILITY. 1-800-BAKER 12

PIPE, HOSE AND FITTINGS

BakerCorp inventories a complete range of pipe, hose and fittings in various diameters to handle any required flow capacity, including high pressure pumping. BakerCorp can exceed the requirements for any application.

ALL TYPES OF PIPE AND HOSE

- Steel
- Aluminum
- Industrial groove

HDPE FOR HIGH PRESSURE AND FLOW

- Up to 30" diameters
- Fusion machines

MULTIPLE END CONNECTORS

- Bauer
- Quick disconnect
- Camlock
- Flanged

ACCESSORIES

BakerCorp offers a variety of accessories including:

- Secondary Containment Berms
- Road Crossings
- Generators
- Fuel Tanks
- Spill Guards
- Auto-Start Options

MORE EQUIPMENT. MORE LOCATIONS. CONFORMED

BAKERCORP™

3020 Old Ranch Parkway, Suite 220
Seal Beach, California 90740
1-800-BAKER 12
1-562-430-4865 Fax
www.bakercorp.com

FILTRATION

CONFORMED

BAKERCORP™

PEOPLE. EQUIPMENT. SOLUTIONS.

TOUGH JOBS. PROVEN RESULTS.

Since 1942, BakerCorp has thrived in a very demanding business. We began by renting temporary steel storage tanks to the oilfield industry. Today, we are the largest, most experienced containment, pump and filtration company in the world with over 90 locations nationwide and international operations in Europe, Canada and Mexico. We serve a breadth of market segments including chemical, manufacturing, refining, oil and gas, construction, municipal, industrial services and environmental remediation.

BakerCorp has achieved this success by adhering to the highest standard of excellence throughout every area of our business. We stock the largest inventory of quality equipment and keep it running with the most comprehensive maintenance program in the industry. Our teams are comprised of highly-trained professionals with years of experience and vast product knowledge. Their dedication to providing customers with unparalleled, 24/7/365 personal service is constant and unwavering. From the earliest stages of your project's planning through its completion, BakerCorp will work closely with you to design the best solution based upon the specific needs of your application.

Partnering with BakerCorp on your projects means that you will work alongside professionals dedicated to providing quality solutions—integrated solutions that pull from a deep pool of talent, equipment and experience. It means that your challenges will be resolved using the most logical and comprehensive mix of tanks, pumps and filtration systems available anywhere. BakerCorp's depth of experience and reputation for innovative system design ensures your project will be brought to a successful conclusion—the first time and every time.

FILTRATION FROM BAKER. LIQUID OR VAPOR. CLEARLY SUPERIOR SOLUTIONS.

From engineered solutions to on-site services and waste management, BakerCorp provides filtration expertise in the fields of specialty media, applied science, and hazardous materials. Our team of scientists and engineers—with extensive knowledge of contaminants, environmental laws and regulations, hazardous material management and health and safety—enable us to customize solutions to meet specific project requirements for both temporary and permanent applications. And once in place, our on-site service technicians and waste management teams provide comprehensive support. BakerCorp is on call, nationwide, wherever and whenever you need us.

Whatever your needs—vapor & liquid, organic & inorganic, high-flow & low-flow—BakerCorp provides superior solutions. Specialty media applications include activated carbon, ion exchange resins, impregnated media, organoclay, sand and gravel. Our equipment lineup includes high and low-pressure carbon and specialty media vessels, odor control systems, sand filters, duplex cartridges, bag filters and auxiliary equipment.

From timely delivery, installation, pumping and vacuuming to packaging, transporting, recycling, incineration and disposition, BakerCorp offers a full complement of unsurpassed filtration systems and support services.

CONFORMED

PROVIDING PROVEN SOLUTIONS TO INDUSTRY FOR OVER 65 YEARS.

ENVIRONMENTAL REMEDIATION
- Contaminated groundwater/soil treatment
- Dredging
- MTBE, perchlorate and metals removal

OIL, NATURAL GAS AND CHEMICAL
- Tank and sump venting
- Tank cleaning and turnaround projects
- Pipeline pigging and maintenance
- Vapor recovery, amine and glycol applications
- Hydrogen sulfide and mercaptans removal

PROCESS EMISSION CONTROL
- Fugitive emission control
- Purification/separation
- Wastewater
- Municipal water and wastewater plants

CONSTRUCTION
- Removal of turbidity, organic, inorganic and metals in dewatering projects
- Odor control for sewer bypass work
- Stormwater runoff, phase II of NPDES

EMERGENCY RESPONSE
- Filtration of contaminants in natural and man-made incidents and disasters

DESIGN. INSTALLATION. ON-SITE SERVICE. BAKER IS ON CALL...NATIONWIDE.

ANATOMY OF AN INTEGRATED BAKERCORP FILTRATION SYSTEM

The diagram below shows a typical groundwater treatment system in which contaminated runoff water and soil drainage can be removed and safely disposed of before new construction begins. Contaminated water is pumped out of the excavation site and processed through several stages of increasingly fine filtration. The clean effluent is then suitable for discharge to a municipal sewer system or elsewhere.

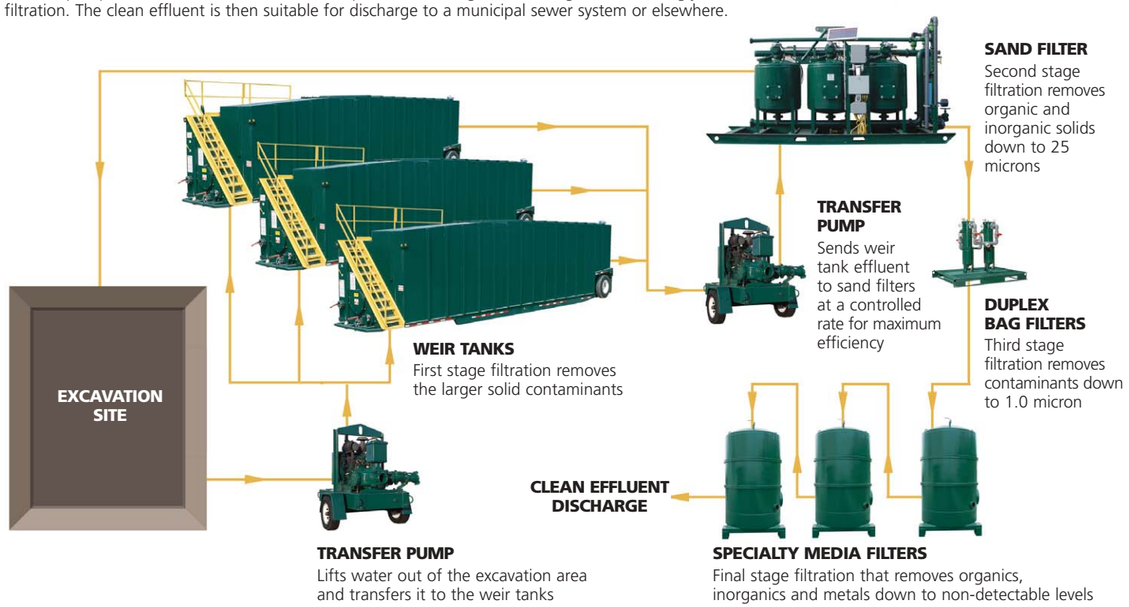

UNSURPASSED FILTRATION SYSTEMS AND SERVICES.

High and low-pressure carbon and specialty media vessels. Odor control systems. Sand filters. Duplex cartridges. Bag filters and auxiliary equipment. No other company offers a more comprehensive lineup of filtration equipment than BakerCorp. We have individual units capable of handling up to 1000 gallons per minute and multiple units can be manifolded together for greater capacity. Our specialty media applications include activated carbon, ion exchange resins, impregnated media, organoclay, sand and gravel and enable us to provide clearly superior solutions to today's filtration challenges.

Custom Engineered Solutions
Leading experts in the fields of specialty media, applied science, and hazardous materials, our scientists and engineers set the industry standard for excellence in custom application solutions. Detailed analysis of every requirement of your project ensures that the system we design meets all of your budgetary and regulatory requirements.

On-Site Services
With regional service centers nationwide, BakerCorp is able to provide an unmatched level of on-site services to complement its filtration solutions. Our specialty teams provide a turn-key, cradle-to-grave solution that includes vacuuming, packaging, transporting, recycling, incineration and land disposal of your spent filtration media. Our OSHA trained technicians, hazardous transportation network, hazardous and non-hazardous recycling facilities and fully permitted incineration facilities provide you with peace of mind while meeting regulatory compliance for any type of waste stream you may encounter.

All of our systems are delivered and installed by our localized teams of HAZ WOPER trained personnel to insure uncompromised performance.

ENVIRONMENTAL REMEDIATION

STORMWATER RUNOFF

SEWER BYPASS ODOR CONTROL

In addition to the industry's most comprehensive filtration solutions, BakerCorp's tank and pump divisions deliver the same levels of expertise, service and quality synonymous with our filtration solutions.

TANKS. NO BIGGER INVENTORY. NO BETTER SERVICE.

Nobody knows temporary containment like BakerCorp. With an unmatched inventory of tanks and accessories, we rent 17 varieties of steel tanks alone, along with poly tanks, roll off boxes, and specialty equipment.

Our unrivaled history and experience, combined with our world-class applications expertise and 24/7/365 emergency-ready support, BakerCorp gets the call on the toughest containment challenges. Our engineers analyze every aspect of your project resulting in a highly efficient solution. Then we deliver it directly to your jobsite, set it up and remove it once the project is complete.

Whatever the job—construction runoff, cooling tower cleaning, wastewater storage/treatment or environmental remediation—BakerCorp delivers.

PUMPS. MAXIMUM PERFORMANCE. ZERO HASSLE.

BakerCorp inventories an extensive fleet of the highest quality prime assist, self-prime, diesel-driven, electric drive, centrifugal and submersible pumps along with a broad range of pipe, hose and fittings. Each pump undergoes a rigorous maintenance program performed by certified mechanics to insure the highest level of dependability. Our field personnel are cross-trained to be technical experts who specialize in pumps, and nothing but. They'll point you to solutions that are cost-effective, labor-friendly and dependable.

Whatever the challenge—wastewater removal, flood control, sewer bypass or hydroblast pad water recirculation—you'll find BakerCorp on the job.

FILTRATION

	Specialty Media	Sand	Duplex Cartridge	Duplex Bag	Odor Control
Ideal Usage	Environmental and industrial contaminant removal, liquid and vapor phase.	Construction, environmental, and industrial sediment removal.	Construction, environmental, and industrial applications.	Industrial and commercial process fluids, urban runoff, groundwater discharge from construction sites or stormwater.	Sewer by-pass and other temporary odor control projects. SCAQMD approved.
Benefit	Skid mounted for portability. Backwashing capabilities. Influent/ effluent gauges and sample ports.	Fully automated. Anti-siphon valves. Easy-to-read gauges. Tool-free plumbing connections. User-friendly. Energy efficient. Lower labor costs.	Portability. Flange-to-flange connections. Continuous operation even during maintenance or filter changes. Reduced mobilization costs.	Coarse filtration in a portable unit. Low or moderate flow particulate removal. Quick installation. Meets municipal requirements for nationwide use.	Adjustable flow range. Variable frequency drive. Sound attenuation. Inlet/outlet sample ports. Simple operation. Meets local regulations.
PERFORMANCE					
Capacity	Liquid: 10 gpm – 1000 gpm; Vapor: 120 cfm – 20,000 cfm	74 gpm – 954 gpm (max normal flow range), depending on model	800 gpm	50 gpm – 200 gpm per clean filter	10,000 cfm
Pressure	Liquid: 0 psi – 75 psi; Vapor: 0 psi – 75 psi	80 psi – 100 psi depending on model	150 psi	150 psi	2 psi
Temperature	Liquid: Ambient to 150° F; Vapor: Ambient to 150° F	Limit to ambient. Consult BakerCorp if temp exceeds 100°	400° F max	w/ PVC Pipe: 140° F; w/ Steel Pipe: 225° F	150° F
Filtration	Down to non-detect levels	Down to 25 microns	Down to 0.5 micron	Down to 1.0 micron	Odor removal
Media Weight Range	Liquid: 100 lbs – 20,000 lbs; Vapor: 100 lbs – 20,000 lbs	1,800 lbs – 14,500 lbs	N/A	N/A	4,000 – 8,000 lbs
Height Range	Liquid: 30" – 190"; Vapor: 30" – 168"	6' 3" – 7' 7"	8' 5" overall	5' 0" – 12' 0"	Approx 14'
Width/Diameter Range	19" – 120"	3' 10" – 5' 0"	7' 0"	3' 8" – 4' 9"	8 0"
Length Range	Skid units available. Call for details.	10' – 21' 3"	15' 0"	4' 8" – 5' 8"	Approx 16'
Equipment Weight Range	45 lbs up. Contact BakerCorp.	1,750 lbs – 6,400 lbs	2,000 lbs	550 lbs – 900 lbs (approx)	Contact BakerCorp.
FEATURES					
Type of Media Used	Granular activated carbon, ion exchange resin, zeolite, organoclay.	Silica, sand, gravel	40" long replaceable cartridges	Filter bags, size #2.	Specialty media
Material of Construction	Carbon steel with epoxy coating on interior surfaces. Some models available in polyethylene.	Carbon steel vessels with epoxy interior coating.	304 stainless steel housings; PVC pipe.	Carbon steel and 304 stainless steel vessels.	Filter vessel is epoxy lined carbon steel with stainless steel screen.
Options	Vapor phase units available in deep bed and radial flow design.	Two, three and four pod models are available.	Combination bag/cartridge units are available.	Combination bag/cartridge units are available.	N/A

VISIT www.bakercorp.com FOR ADDITIONAL SPECIFICATIONS. CALL YOUR LOCAL BRANCH FOR PRODUCT AVAILABILITY. 1-800-BAKER 12

CONFORMED

PIPE, HOSE AND FITTINGS

BakerCorp inventories a complete range of pipe, hose and fittings in various diameters to exceed the needs of any application.

ALL TYPES OF PIPE AND HOSE

- Steel
- Aluminum
- Industrial groove

HDPE FOR HIGH PRESSURE AND FLOW

- Up to 30" diameters
- Fusion machines

MULTIPLE END CONNECTORS

- Bauer
- Quick disconnect
- Camlock
- Flanged

SPECIALTY MEDIA TO HANDLE ANY JOB

Activated Carbon—Granular, pelletized and powdered media to remove organic contaminants from vapor and liquid streams.

Impregnated Media—Effective removal of inorganic contaminants using activated carbon and zeolite based media. Impregnated with chemical reagents.

Ion Exchange Resins—Synthetically manufactured to carry an ionic charge, either positive or negative, ion exchange resins are an effective solution to highly complex applications such as perchlorate and dissoved metals removal.

Metals Removal Media—Specialty media to remove arsenic and other heavy metals.

Oil Removal Media—Specifically manufactured to remove oil and heavy organics from water. This media acts as a cost-effective prefilter for carbon adsorbers.

QUALITY ASSURANCE PROGRAM

BakerCorp has a rigorous maintenance program patterned after ISO 9000 certification guidelines. This QMS program is exclusive to BakerCorp. It ensures each and every one of our filtration units is inspected and of the highest quality each time it's ready for use by a customer.

LEVEL I—BEFORE DELIVERY

- Visual inspection of entire system including influent and effluent connections as well as gaskets, fittings and hatches to make sure they are operating properly and meet job requirements
- Load media if job requires

UPON DELIVERY:

- Review operation of bleed valve, drain valve and if applicable, isolation valves with customer
- Review plumbing—which is influent, effluent, and if customer is installing piping, torque specs
- Review any weather related issues like extreme heat or freezing temperatures

LEVEL II—UPON PICKUP

- All Level I "Before Delivery" inspections
- Inspect interior for lining condition and cleanliness

LEVEL III— MAINTENANCE CHECKUP

- Pressure test filter vessels using compressed air. Check all connections and openings for leaks
- Perform any necessary repairs found in Levels I–II

WASTE MANAGEMENT SERVICES

BakerCorp is your single source for pollution management. Our OSHA trained technicians, hazardous transportation network, hazardous and non-hazardous recycling facilities and fully permitted incineration facilities provide you with peace of mind while meeting regulatory compliance for any type of waste stream you may encounter.

- Contaminated soil & water
- Contaminated debris
- Industrial waste

MORE EQUIPMENT. MORE LOCATIONS.

CONFORMED

BAKERCORP™

3020 Old Ranch Parkway, Suite 220
Seal Beach, California 90740
1-800-BAKER 12
1-562-430-4865 Fax
www.bakercorp.com

Appendix F

UPRR Standard Plans

CONFORMED

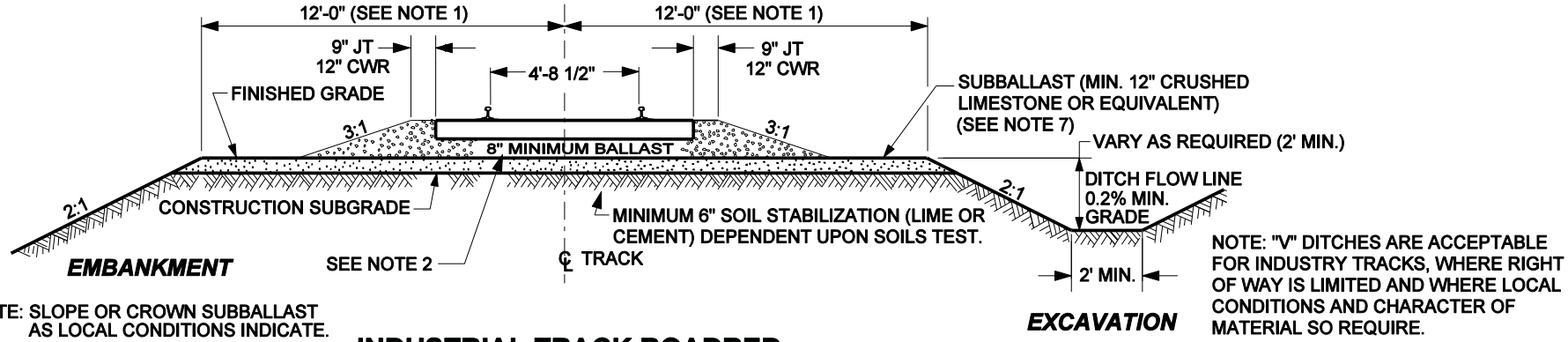

NOTE: SLOPE OR CROWN SUBBALLAST AS LOCAL CONDITIONS INDICATE.

NOTE: "V" DITCHES ARE ACCEPTABLE FOR INDUSTRY TRACKS, WHERE RIGHT OF WAY IS LIMITED AND WHERE LOCAL CONDITIONS AND CHARACTER OF MATERIAL SO REQUIRE.

INDUSTRIAL TRACK ROADBED

TYPICAL SECTION

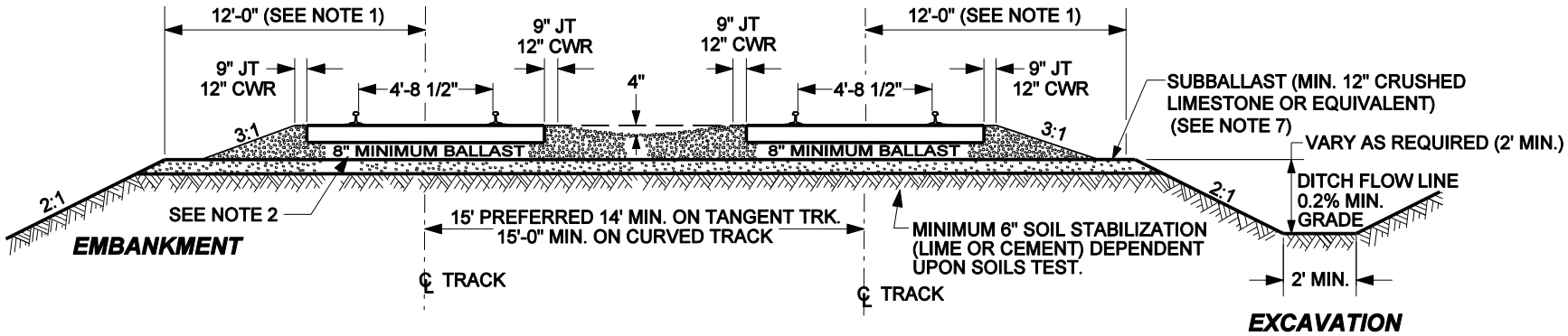

INDUSTRIAL ROADBED FOR TWO OR MORE TRACKS

TYPICAL SECTION

NOTES:

1. 12' SHOULDER WIDTH STANDARD. 11' SHOULDER MUST BE APPROVED BY CHIEF ENGINEER.
2. IF USING CONCRETE TIES - 10" MINIMUM BALLAST UNDER TIES.
3. PREFERABLY TRACKS WILL NOT BE DEPRESSED BELOW GROUND LEVEL PARTICULARLY IN SNOW AND HIGH RUNOFF TERRITORIES, TRACKS CONSTRUCTED AT OR BELOW GROUND LEVEL MUST HAVE FULL STANDARD ROADBED DITCHES.
4. ALL NECESSARY DRAINAGE FACILITIES TO DIVERT RUNOFF WATER AWAY FROM TRACKS ARE TO BE PROVIDED AS APPROVED BY UNION PACIFIC RAILROAD'S CHIEF ENGINEER OF DESIGN.
5. WALKWAYS WILL BE CONSTRUCTED TO COMPLY WITH STATE REQUIREMENTS.
6. THESE STANDARDS DO NOT APPLY TO ORE AND COAL LINES OR OTHER HEAVILY USED TRACKS.
7. REFER TO EXHIBIT "H" IF LESS THAN 12" OF SUBBALLAST IS TO BE USED.

STD DWG 0003

UNION PACIFIC RAILROAD ENGINEERING STANDARDS

ROADBED SECTION FOR INDUSTRIAL TRACK CONSTRUCTION

UNION PACIFIC

ADOPTED: AUG. 31, 2004
REVISED:
FILE NO.: 0003

STD DWG
0003

Copyright © 2004 by Union Pacific Railroad

CONFORMED

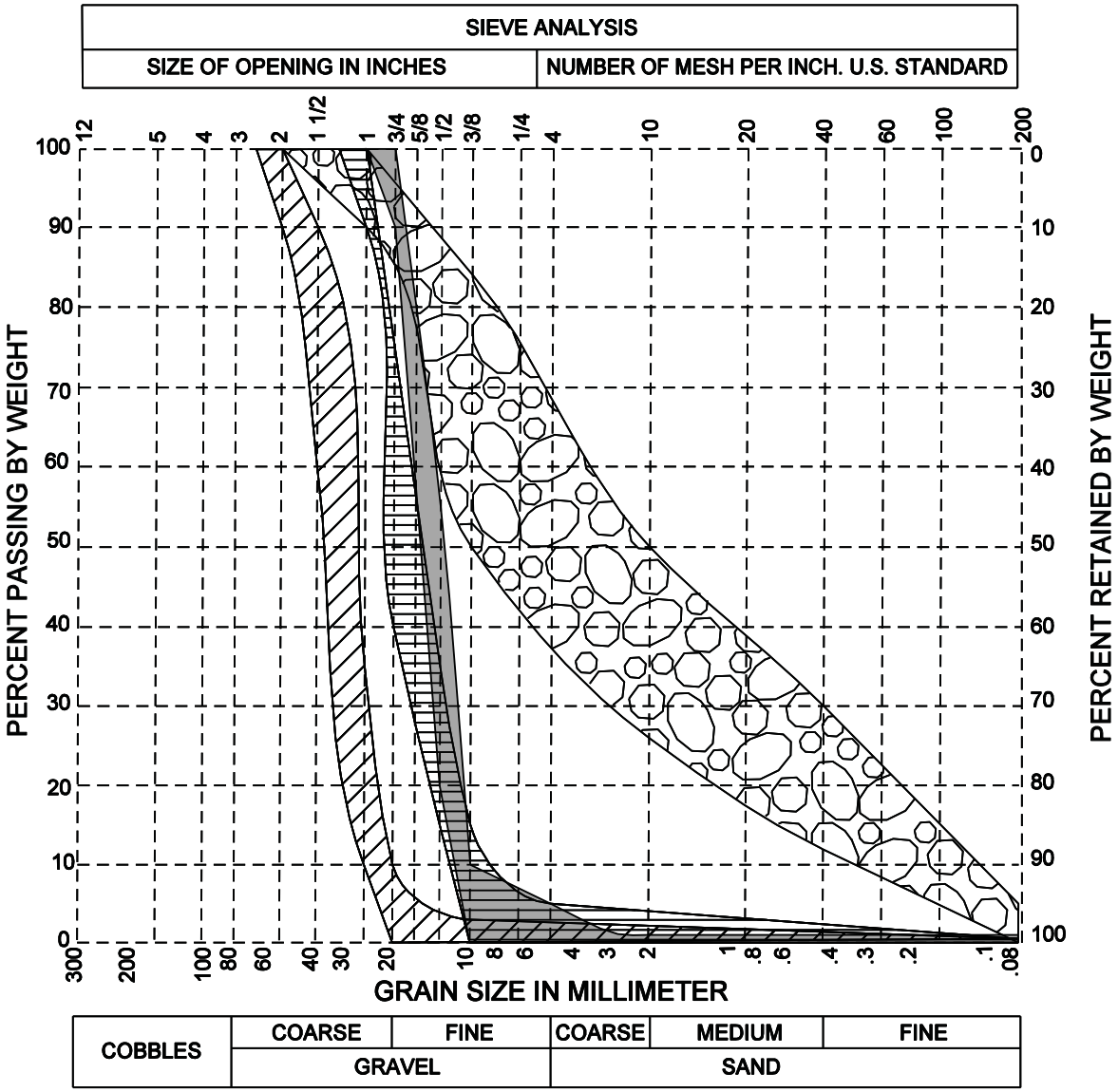

	UP BALLAST CLASS			
	1	2	3	SUB BALLAST
SQUARE OPENING	2"-3/8"	1"- NO. 4	3/4"- NO. 8	1 1/2"-0"
2 1/2"	100	——	——	——
2"	90-100	——	——	100
1 1/2"	50-80	100	——	——
1 1/4"	——	100	——	——
1"	10-35	90-100	100	90-100
3/4"	0-10	40-75	90-100	——
1/2"	0-5	15-35	20-55	——
3/8"	——	0-15	0-10	50-84
No.4	——	0-5	0-5	——
No.8	——	——	0-1	——
No.10	——	——	——	26-50
No.40	——	——	——	12-30
No.200	0-.5	0-.5	0-1	0-5

PERCENT PASSING (BY WEIGHT)
[ALL AGGREGATE SAMPLING AND TESTING PER ASTM LATEST REVISION.]

NOTES:
FOR STANDARD CROSS SECTIONS, SEE STD DWG 0001A, OR STD DWG 0002A.

SELECT MATERIAL TO BE USED AS SUB BALLAST IN POOR NATIVE SOIL CONDITIONS WHERE SPECIFIED BY CHIEF ENGINEER.

CLASS 1 AND CLASS 2 BALLAST MATERIALS ARE REQUIRED TO BE WASHED PRIOR TO LOADING.

CLASS 1 BALLAST FOR MAIN TRACK (OLD "D")

CLASS 2 BALLAST FOR SECONDARY MAIN, BRANCH AND YARD TRACK (OLD "C")

CLASS 3 BALLAST SCREENINGS FOR SIGNAL MOUNDS, ETC..

SELECT MATERIAL (SUB BALLAST - SEE NOTE)

BALLAST CLASS	ITEM NO.
1	562-0766
2	562-1432
3	562-2098
SUB BALLAST	562-5428

UNION PACIFIC RAILROAD ENGINEERING STANDARDS

BALLAST & SUBBALLAST GRADATION TABLE

UNION PACIFIC

APPROVED: VP ENGINEERING
ADOPTED: DEC. 31, 1996
REVISED: JAN. 3, 2011
FILE NO.: 0010E

STD DWG
0010E

STD DWG 0010E

Copyright © 2011 by Union Pacific Railroad

CONFORMED

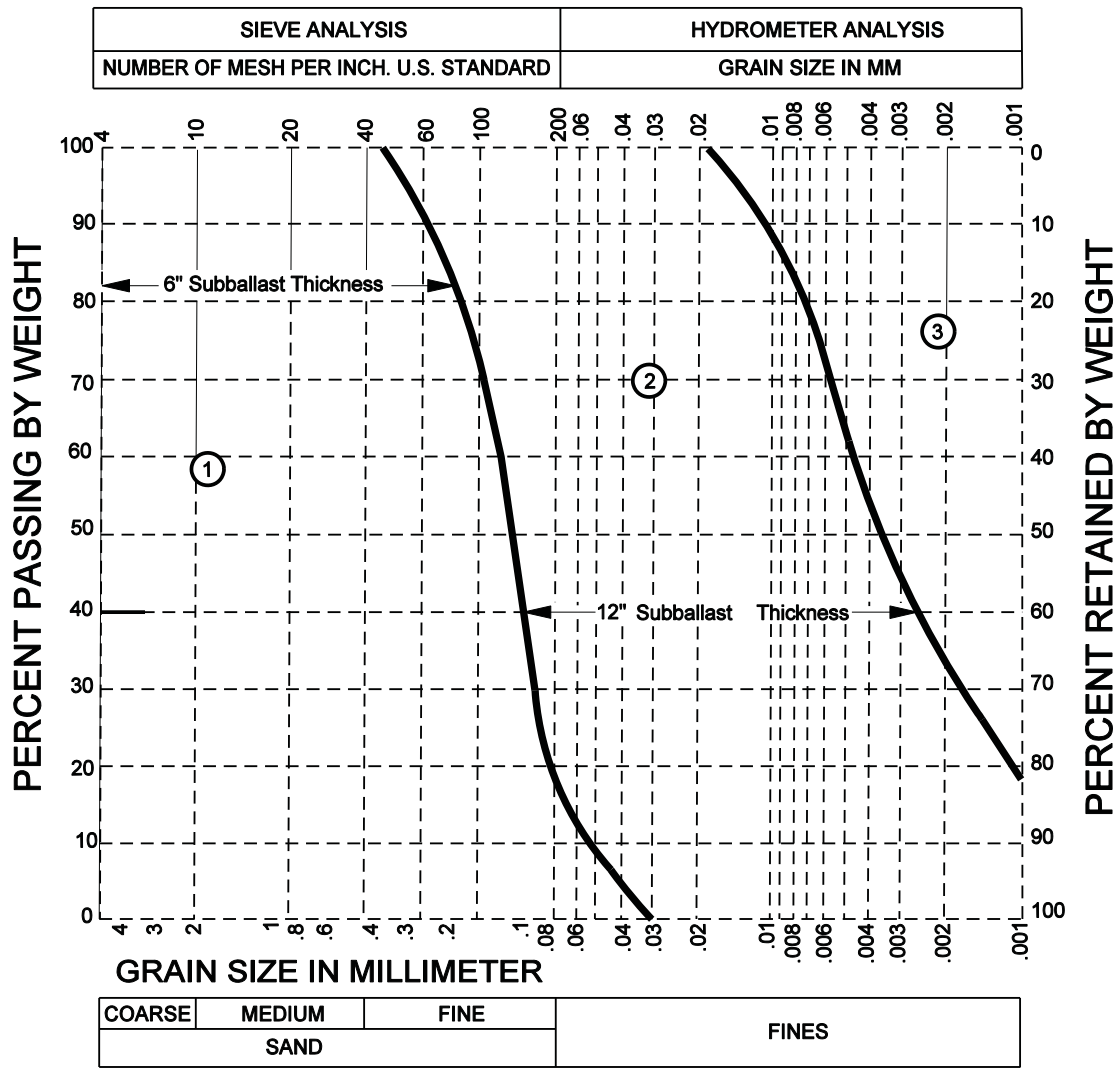

	GRADATION CURVE	
SIEVE SIZE	6" LIMIT	12" LIMIT
No. 40	100	—
No. 60	92	—
No.100	72	—
No. 200	19	—
.015	—	100
.006	—	72
.004	—	54
.001	—	19

PERCENT PASSING (BY WEIGHT)
[ALL AGGREGATE SAMPLING AND TESTING PER ASTM LATEST REVISION.]

(1) Zone of subgrade materials requiring 6" of subballast.

(2) Zone of subgrade materials requiring 12" of subballast.

(3) Additional measures will be required per recommendations of an engineering soils analysis.

UNION PACIFIC RAILROAD ENGINEERING STANDARDS

GRAIN SIZE DISTRIBUTION FOR SUBGRADE SOILS

ADOPTED: JAN. 21, 2004
REVISED: FEB. 13, 2006
FILE NO.: 0013A

STD DWG
0013A

Copyright © 2006 by Union Pacific Railroad

CONFORMED

STD DWG
0013A

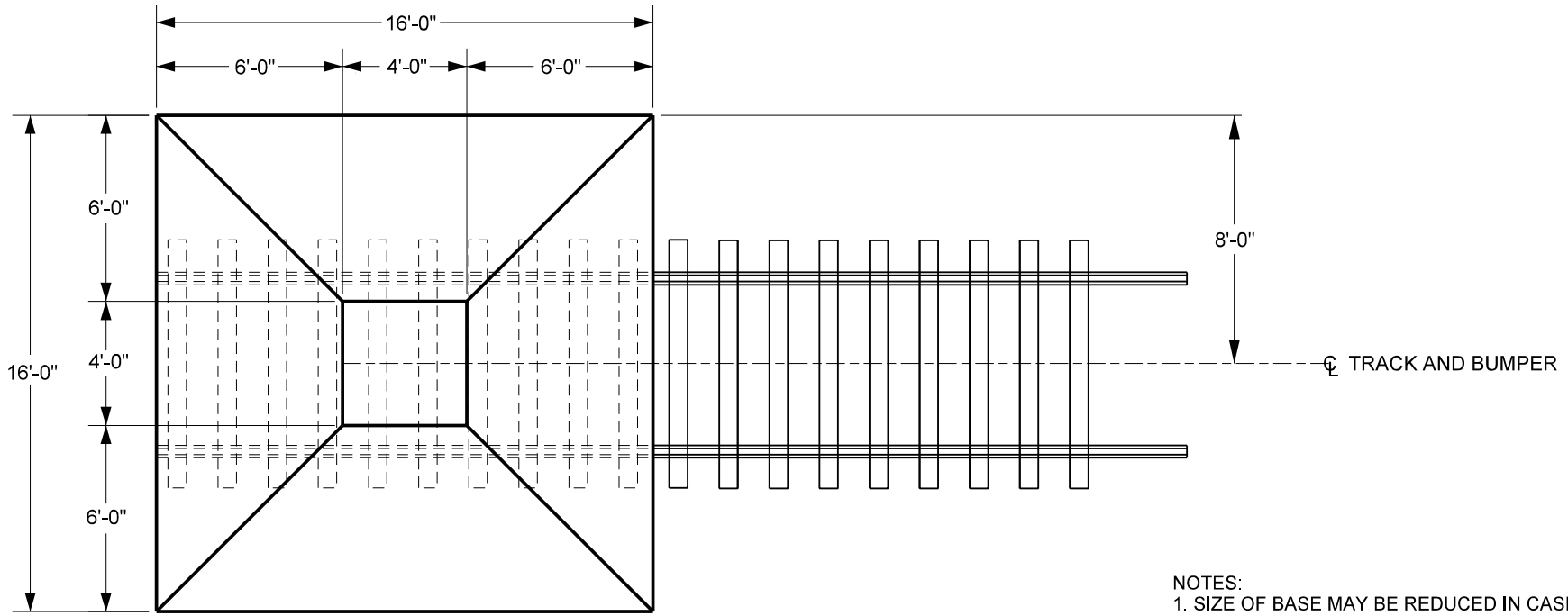

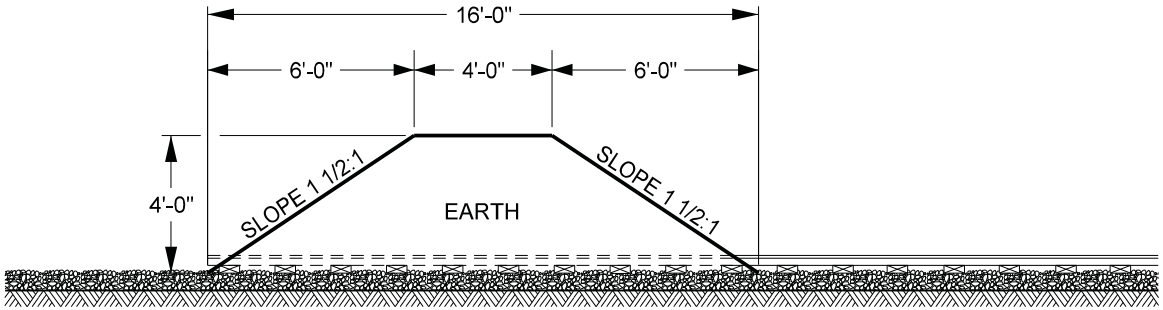

NOTES:

1. SIZE OF BASE MAY BE REDUCED IN CASES WHERE WIDTH OF ROADBED WILL NOT PERMIT PLAN TO BE FOLLOWED.
2. BUMPER TO BE 4'-0" TALL FROM BASE OF TIE.
3. IF TRACK CLEARANCE DOES NOTE ALLOW, BOTTOMS MAY BE SQUARED OFF.
4. EARTHEN BUMPER AS SHOWN HERE ON SHALL BE USED AT ALL LOCATIONS WHERE BUMPER IS REQUIRED EXCEPT ON THE AUTHORITY OF THE CHIEF ENGINEER OF MAINTENANCE TO USE A BUMPER OF SOME OTHER DESIGN.

UNION PACIFIC RAILROAD ENGINEERING STANDARDS

STANDARD EARTH BUMPER FOR END OF SPUR TRACK

APPROVED: VP ENGINEERING
ADOPTED: FEB. 16, 1965
REVISED: SEP. 4, 2012
FILE NO.: 0030B

STD DWG
0030B

STD DWG
0030B

CONFORMED

Copyright © 2012 by Union Pacific Railroad

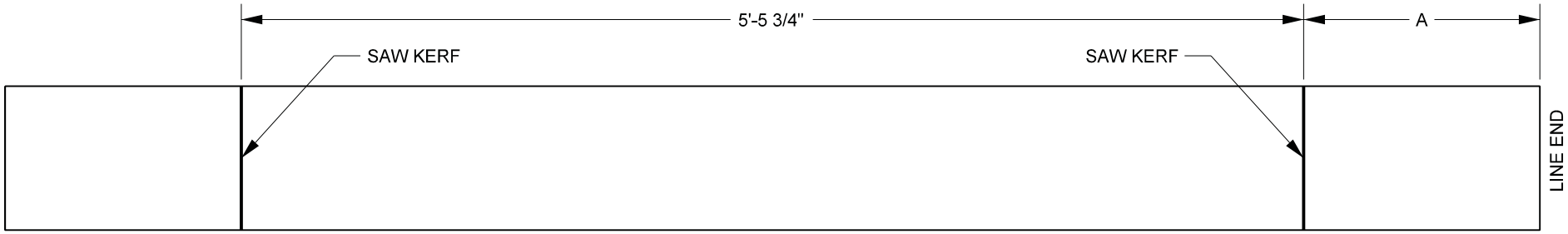

YEAR MANUFACTURED AND TIE PLANT CODE TO BE ON TOP OF TIE

DIMENSIONS FOR SAW KERFS				
PLASTIC	WESTERN SPECIES (SOFTWOOD)	HARDWOOD	TIE LENGTH	"A"
-	502-0798	502-7980	8'-0"	14.75"
-	502-0790	502-7979	8'-6"	17.75"
-	502-0799	502-7991	9'-0"	21.125"

NOTES:
1. ALL TIES TO HAVE SAW KERFS LOCATED ON THE SAP SIDE (TOP) OF TIES.

2. SAW KERF TO BE MAXIMUM OF 1/4" WIDE X 1/4" DEEP.

UNION PACIFIC RAILROAD ENGINEERING STANDARDS

WOOD AND COMPOSITE CROSS TIES

ADOPTED: DEC. 31, 1996
REVISED: JAN. 22, 2013
FILE NO.: 0210E

STD DWG
0210E

STD DWG
0210E

CONFORMED

Copyright © 2013 by Union Pacific Railroad

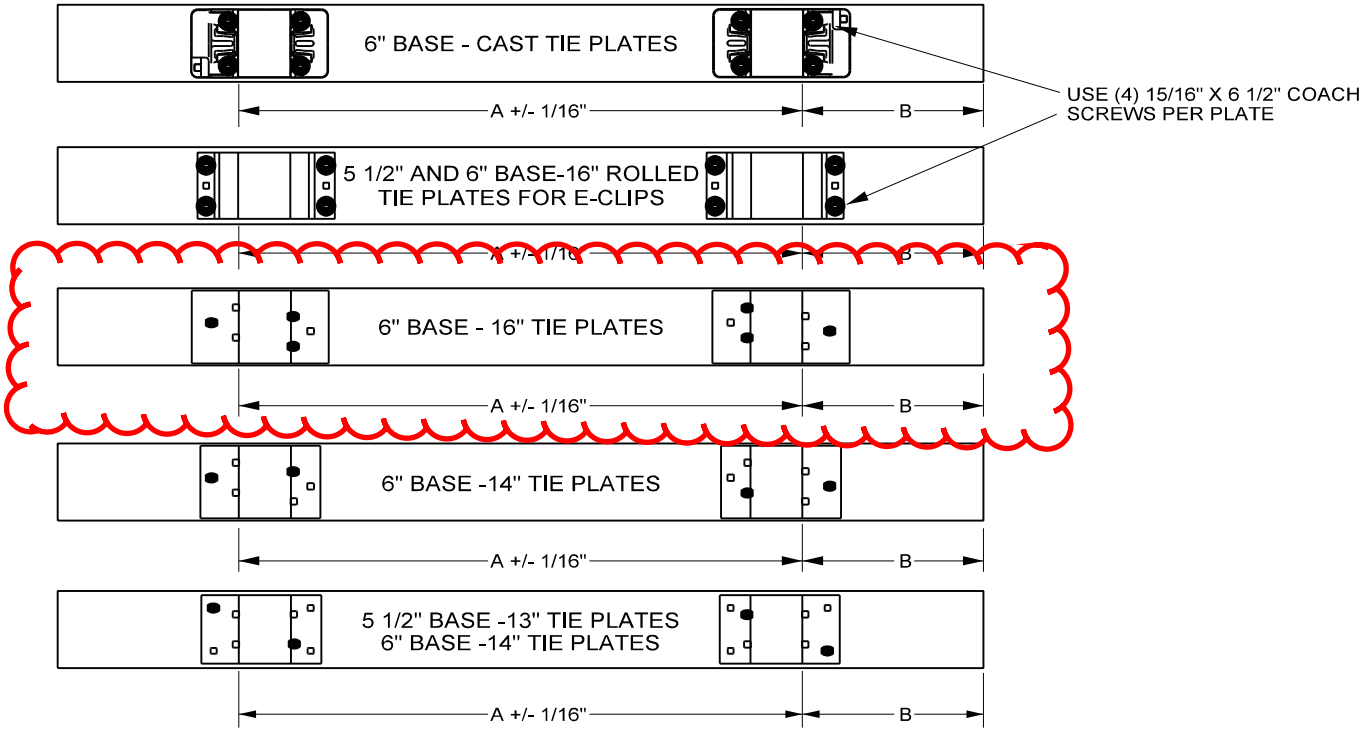

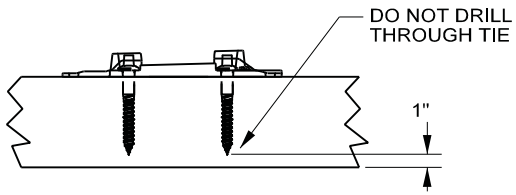

COACH SCREW CLEARANCE

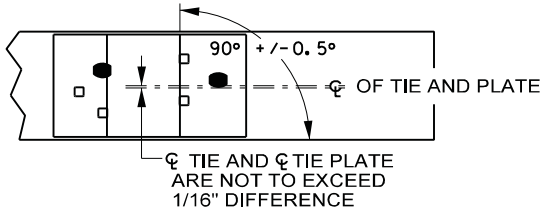

TYP. PLATE ALIGNMENT

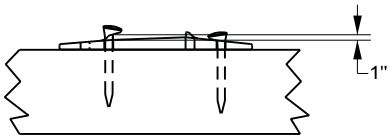

GAGE SPIKE CLEARANCE

NOTES:
PRE-BORED HOLES NECESSARY TO INSTALL COACH SCREWS WITH RESILIENT FASTENER TIE PLATES DRILLED TO ONE HALF INCH FROM BOTTOM OF THE TIE, USING FOLLOWING PRE-BORED DIAMETERS:
- 11/16"-SOFT WOOD TIES
- 3/4"-HARD WOOD & COMPOSITE TIES
- 13/16"-AZOBE TIES

RAIL GAGE SPIKES WILL HAVE 1" CLEARANCE BETWEEN RAIL SEAT AND UNDERSIDE OF SPIKE HEAD.

UNION PACIFIC RAILROAD ENGINEERING STANDARDS

PREPLATING DIMENSIONS FOR WOOD TIES

ADOPTED: DEC. 31, 1996
REVISED: NOV. 15, 2013
FILE NO.: 0211I

STD DWG
0211I
PAGE 1 OF 2

STD DWG
0211I
PAGE 1 OF 2

CONFORMED

Copyright © 2013 by Union Pacific Railroad

RAIL SIZE (ALL TIES 7" X 9")	QUANTITY SPIKES OR SCREWS	TIE PLATE	A	TIE PLATE	TIE LENGTH	B	ITEM NUMBER	
							HARDWOOD NEW PLATE	HARDWOOD SECONDHAND PLATE
5 1/2" BASE	4 SPIKES	13" SPIKE 8 HOLE MP-13	65"	554-3779-2	8'	15 1/2"	-	502-9793
					8'-6"	18 1/2"	-	502-7981
					9'	21 1/2"	-	502-9700
	8 SCREWS	15" ROLLED FOR E-CLIPS	65"	503-6342-0	8'-6"	18 1/2"	502-7902	-
					9'	21 1/2"	502-7976	-
					10'	27 1/2"	502-7975	-
6" BASE	4 SPIKES	14" SPIKE 8 HOLE MP-14	65 3/4"	554-4445-2 OR 554-3223-2	8'	15 1/8"	-	502-9787
					8'-6"	18 1/8"	-	502-6895
					9'	21 1/8"	-	502-9706
	4 SPIKES	14" SPIKE 6 HOLE BN/UP	65 3/4"	554-3230-0	8'	15 1/8"	502-7973	-
					8'-6"	18 1/8"	502-7974	-
					9'	21 1/8"	502-7977	-
	6 SPIKES	16" SPIKE 6 HOLE	65 3/4"	554-3240-0	8'-6"	18 1/8"	502-6896	-
					9'	21 1/8"	502-9797	-
					10'	27 1/8"	502-1024	-
	4 SPIKES	16" SPIKE 6 HOLE	65 3/4"	554-3240-2	8'-6"	18 1/8"	-	502-6898
					9'	21 1/8"	-	502-6952
					10'	27 1/8"	-	502-1026
	4 SPIKES	16" SPIKE 6 HOLE UP-16	65 3/4"	544-5334-2	8'-6"	18 1/8"	-	502-6899
					9'	21 1/8"	-	502-6950
					10'	27 1/8"	-	502-1028
	8 SCREWS	16" CAST SAFELOK CLIPS	65 3/4"	503-6219-0	8'-6"	18 1/8"	502-7901	-
					9'	21 1/8"	502-9799	-
					10'	27 1/8"	502-1020	-
	8 SCREWS	16" CAST SAFELOK CLIPS	65 3/4"	503-6219-2	8'-6"	18 1/8"	-	502-6900
					9'	21 1/8"	-	502-9802
					10'	27 1/8"	-	502-1022
	8 SCREWS	16" ROLLED FOR E-CLIPS	65 3/4"	503-9020-0	8'-6"	18 1/8"	502-7966	-
					9'	21 1/8"	502-7888	-
					10'	27 1/8"	502-7999	-

UNION PACIFIC RAILROAD ENGINEERING STANDARDS

PREPLATING DIMENSIONS FOR WOOD TIES

ADOPTED: DEC. 31, 1996
REVISED: NOV. 15, 2013
FILE NO.: 0211I

STD DWG
0211I
PAGE 1 OF 2

STD DWG
0211I
PAGE 1 OF 2

CONFORMED

Copyright © 2013 by Union Pacific Railroad

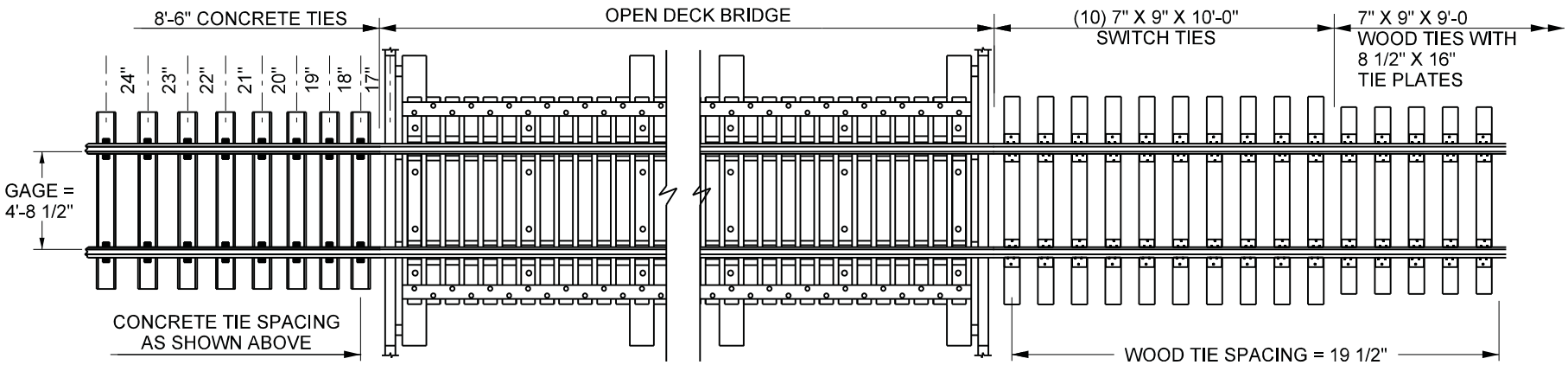

TO CONCRETE TRACK **OPEN DECK BRIDGE** **TO WOOD TRACK**

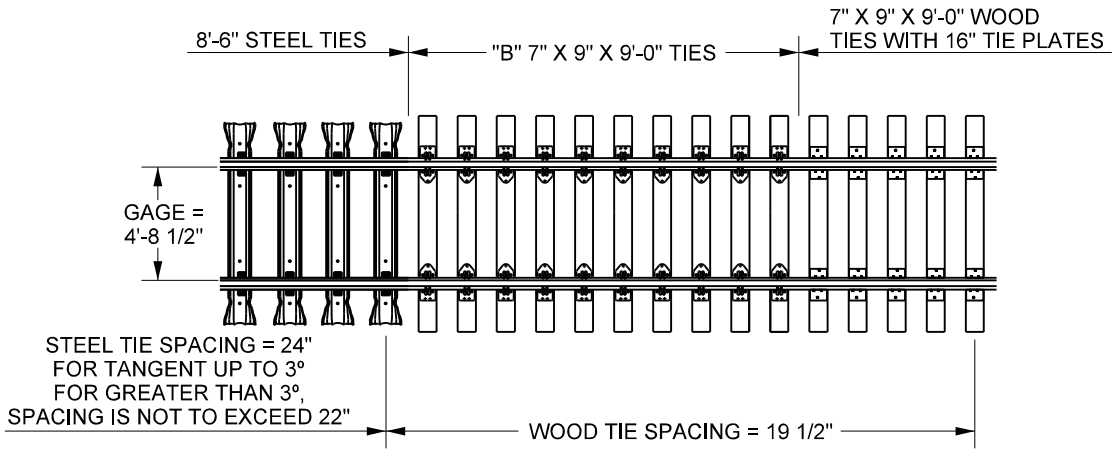

STEEL TIE TO WOOD

NOTES:

1. TRANSITION ZONES ARE REQUIRED ON ALL TRACKS WHERE MAXIMUM AUTHORIZED SPEED IS 20 MPH OR GREATER.

EXCEPTION 1: MAKING TRANSITION FROM PREMIUM WOOD TURNOUTS TO CONVENTIONAL WOOD TRACK IS REQUIRED WHEN TRACK SPEED EXCEEDS 40MPH..

2. TRANSITIONS BETWEEN CONCRETE OR STEEL TIES AND WOOD TIES SHOULD NOT BE MADE WHERE CURVATURE OR OBSTRUCTIONS SUCH AS CROSSINGS EXISTS. INSTEAD, CONCRETE OR STEEL TIES SHOULD BE EXTENDED THROUGH THE OBSTRUCTION OR CURVE BEFORE INSTALLING TRANSITION.

EXCEPTION 2: STEEL TUNNEL TIES ARE NOT TO BE INSTALLED OUTSIDE OF TUNNEL.

3. SEE PAGES 2 AND 3 FOR MORE DETAILS.

		MAXIMUM AUTHORIZED TRACK SPEED		
	TIE TYPE	0-29 MPH	30 TO 49 MPH	50 MPH AND GREATER
QTY REQ'D	"B"	10	10	10

TIE TYPE REQUIRED

"B" - 7" X 9" X 9'-0" PREPLATED TIE UPRR ITEM #502-9799
(4) SAFELOK CLIPS UPRR ITEM #503-5100

CONFORMED

UNION PACIFIC RAILROAD ENGINEERING STANDARDS

STANDARD TRANSITION ZONES

ADOPTED: JAN. 24, 1997
REVISED: FEB. 19, 2013
FILE NO.: 0220F

STD DWG
0220F
PAGE 1 OF 3

Copyright © 2013 by Union Pacific Railroad

STD DWG
0220F
PAGE 1 OF 3

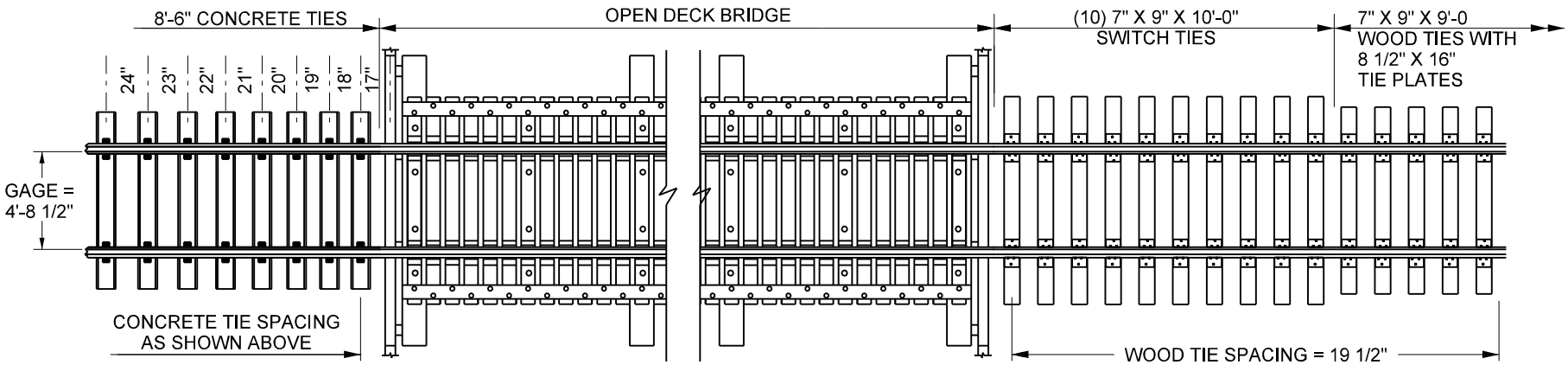

TO CONCRETE TRACK **OPEN DECK BRIDGE** **TO WOOD TRACK**

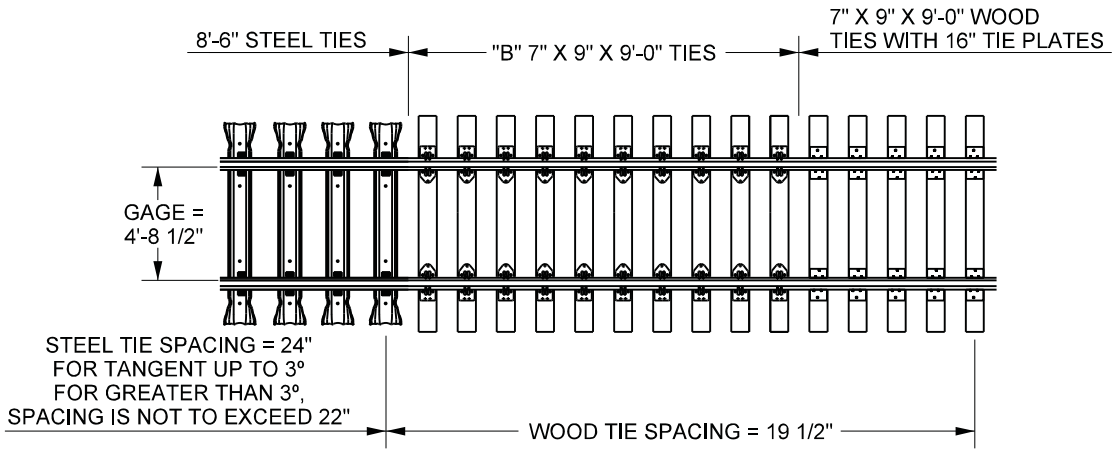

STEEL TIE TO WOOD

NOTES:

1. TRANSITION ZONES ARE REQUIRED ON ALL TRACKS WHERE MAXIMUM AUTHORIZED SPEED IS 20 MPH OR GREATER.

EXCEPTION 1: MAKING TRANSITION FROM PREMIUM WOOD TURNOUTS TO CONVENTIONAL WOOD TRACK IS REQUIRED WHEN TRACK SPEED EXCEEDS 40MPH..

2. TRANSITIONS BETWEEN CONCRETE OR STEEL TIES AND WOOD TIES SHOULD NOT BE MADE WHERE CURVATURE OR OBSTRUCTIONS SUCH AS CROSSINGS EXISTS. INSTEAD, CONCRETE OR STEEL TIES SHOULD BE EXTENDED THROUGH THE OBSTRUCTION OR CURVE BEFORE INSTALLING TRANSITION.

EXCEPTION 2: STEEL TUNNEL TIES ARE NOT TO BE INSTALLED OUTSIDE OF TUNNEL.

3. SEE PAGES 2 AND 3 FOR MORE DETAILS.

		MAXIMUM AUTHORIZED TRACK SPEED		
	TIE TYPE	0-29 MPH	30 TO 49 MPH	50 MPH AND GREATER
QTY REQ'D	"B"	10	10	10

TIE TYPE REQUIRED

"B" - 7" X 9" X 9'-0" PREPLATED TIE UPRR ITEM #502-9799
(4) SAFELOK CLIPS UPRR ITEM #503-5100

CONFORMED

UNION PACIFIC RAILROAD ENGINEERING STANDARDS

STANDARD TRANSITION ZONES

ADOPTED: JAN. 24, 1997
REVISED: FEB. 19, 2013
FILE NO.: 0220F

STD DWG
0220F
PAGE 1 OF 3

Copyright © 2013 by Union Pacific Railroad

STD DWG
0220F
PAGE 1 OF 3

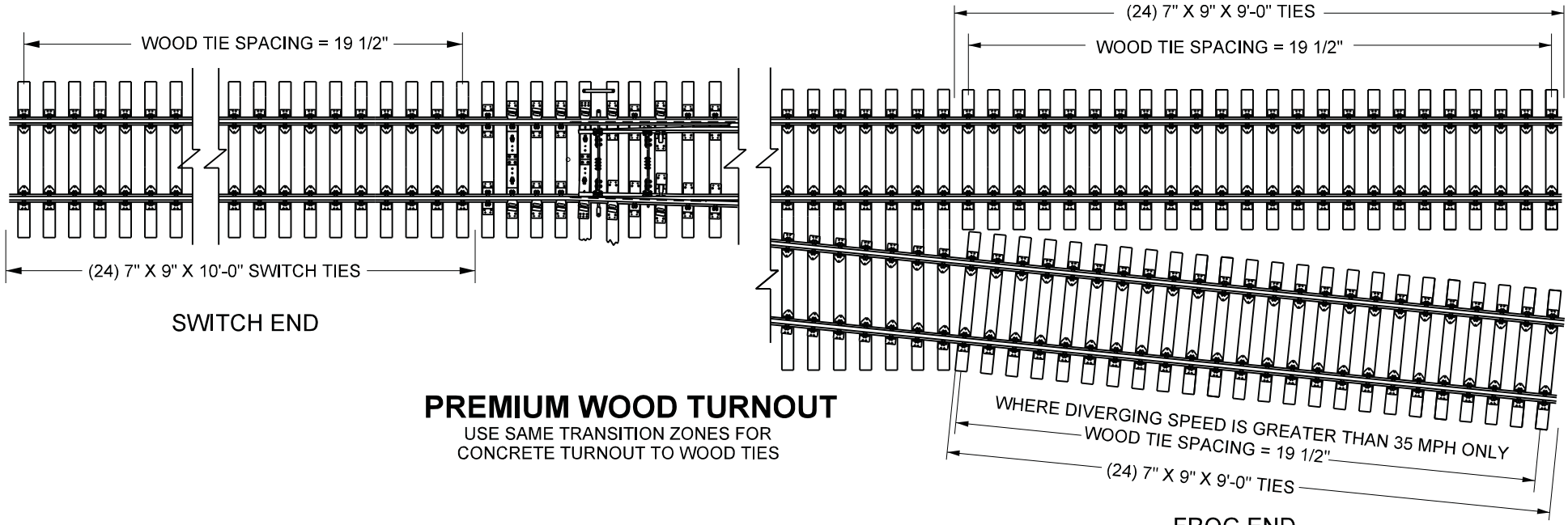

PREMIUM WOOD TURNOUT

USE SAME TRANSITION ZONES FOR
CONCRETE TURNOUT TO WOOD TIES

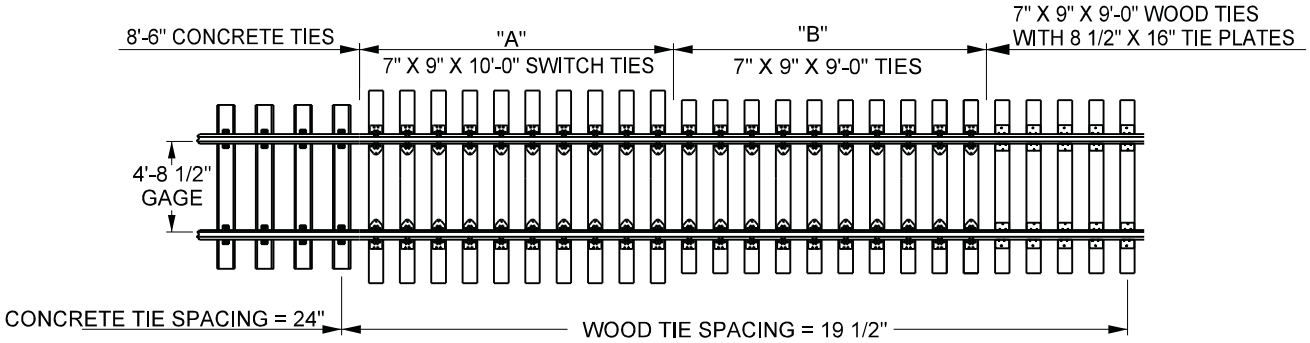

CONCRETE TIE TO WOOD

NOTES:

1) FOR CONCRETE TURNOUTS INSTALLED IN WOOD TIE TRACK, UTILIZE THE CONCRETE TIE TO WOOD TRANSITION SHOWN OFF THE LAST LONG CONCRETE TIE.

2. SEE PAGES 1 AND 3 FOR NOTES AND MORE DETAILS.

		MAXIMUM AUTHORIZED TRACK SPEED		
	TIE TYPE	0-29 MPH	30 TO 49 MPH	50 MPH AND GREATER
QTY REQ'D	"A"	0	10	20
	"B"	10	10	10

TIE TYPE REQUIRED

"A" - 7" X 9" X 10'-0" PREPLATED SWITCH TIE UPRR ITEM #502-1020
(4) SAFELOK CLIPS UPRR ITEM #503-5100

"B" - 7" X 9" X 9'-0" PREPLATED TIE UPRR ITEM #502-9799
(4) SAFELOK CLIPS UPRR ITEM #503-5100

CONFORMED

UNION PACIFIC RAILROAD
ENGINEERING STANDARDS

STANDARD TRANSITION ZONES

ADOPTED: JAN. 24, 1997
REVISED: FEB. 19, 2013
FILE NO.: 0220F

STD DWG
0220F
PAGE 2 OF 3

Copyright © 2013 by Union Pacific Railroad

STD DWG
0220F
PAGE 2 OF 3

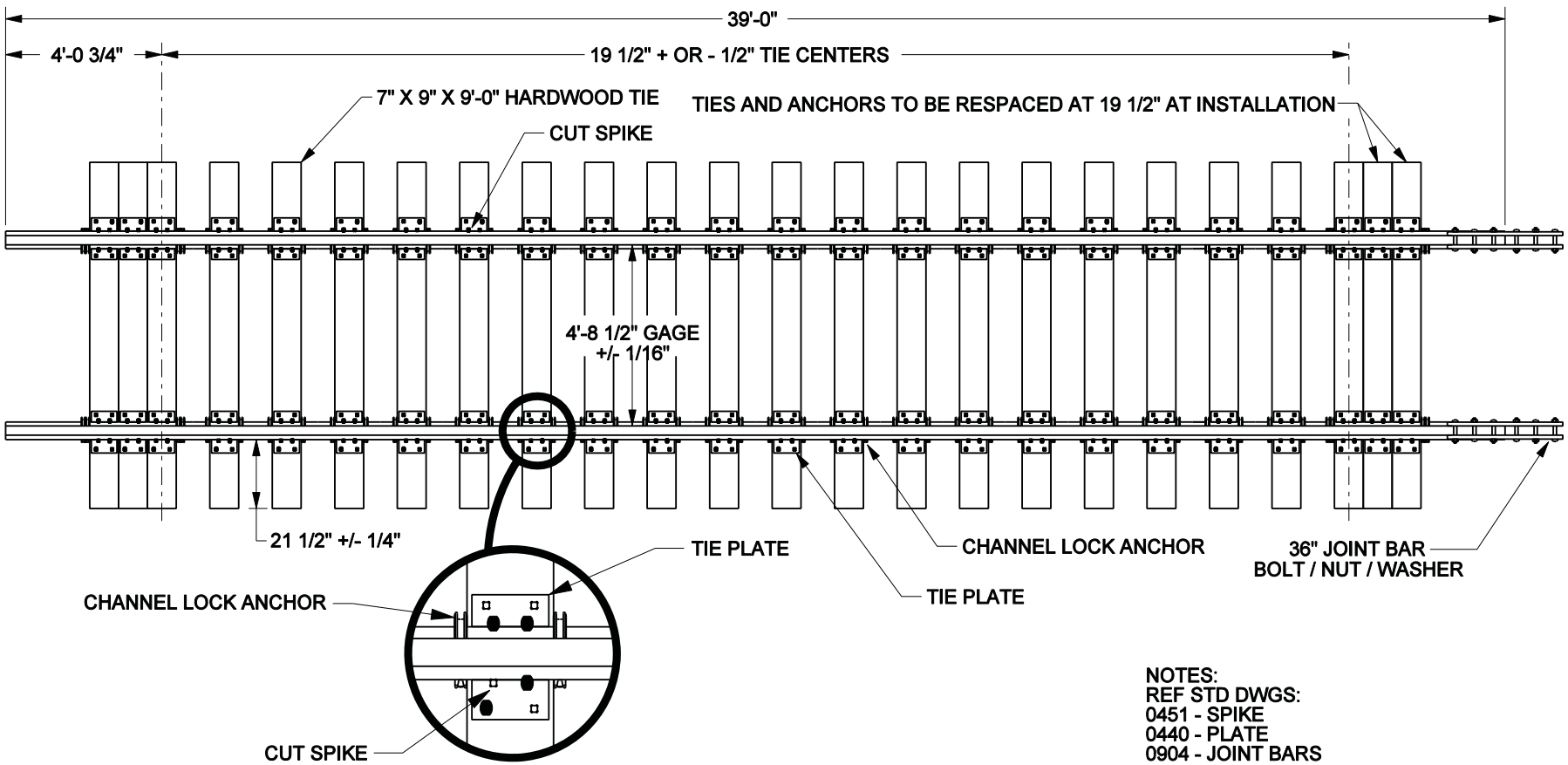

NOTES:
REF STD DWGS:
0451 - SPIKE
0440 - PLATE
0904 - JOINT BARS
0950 - TRACK BOLTS
0720 - RAIL
0457 - ANCHOR

BILL OF MATERIAL	
QTY.	ITEM.
192 EA.	SPIKE
48 EA.	TIE PLATE
04 EA.	JOINT BAR 36"
12 EA	BOLT (1" X 6") / NUT / WASHER
78 FT.	115 LB. RAIL DBE 3 1/2 X 6 X 6
92 EA.	CHANNEL LOCK ANCHOR 5 1/2"
24 EA.	TIES 7" X 9" X 9'-0" HARDWOOD

UNION PACIFIC RAILROAD
ENGINEERING STANDARDS

115 LB WOOD TRACK PANEL

ITEM NO. 561-0798

ADOPTED: APRIL 9, 2001
REVISED:
FILE NO.: 0251

STD DWG 0251

STD DWG 0251

Copyright © 2001 by Union Pacific Railroad

CONFORMED

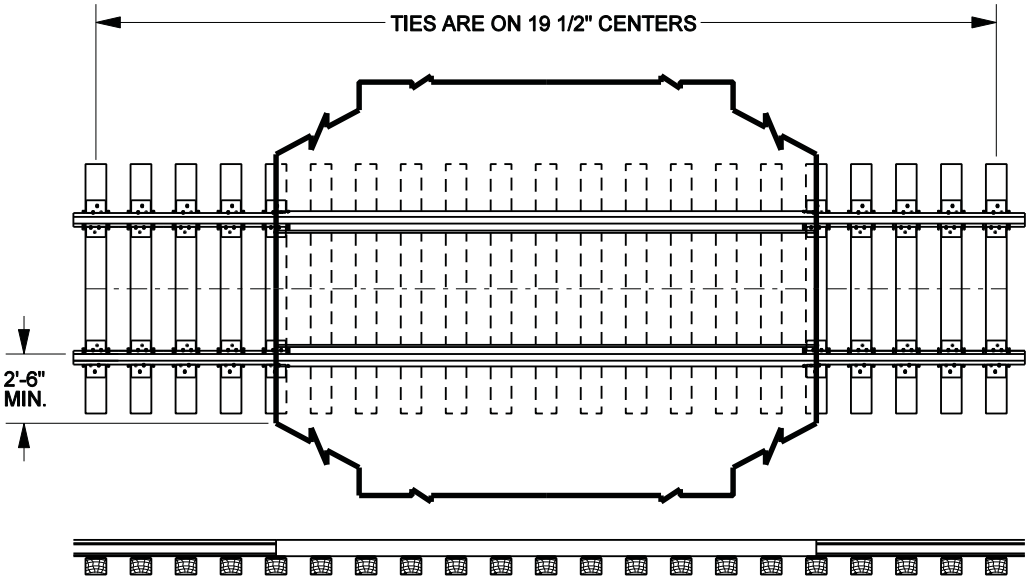

NOTE: SEE STD DWG 0301 FOR DRAINAGE DETAILS

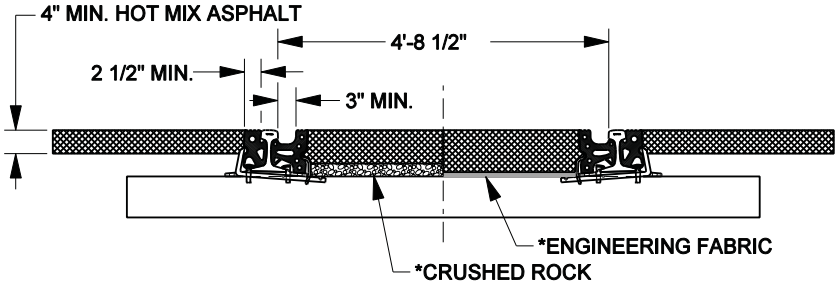

*ENGINEERING FABRIC OR 2" OF CRUSHED ROCK MUST BE USED TO PREVENT HOT MIX ASPHALT FROM BONDING TO TIES

CROSS SECTION DETAIL

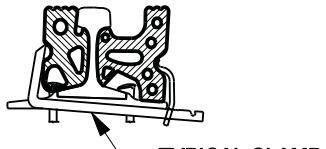

SEAL SECTION

ORDERING NOTE:
RUBBER RAIL SEAL CROSSING SECTIONS ARE TO BE ORDERED BY "TRACK FEET" IN 8'-0" INCREMENTS. EACH 8'-0" INCREMENT WILL INCLUDE (2) GAGE & (2) FIELD SIDE RAIL SEAL SECTIONS, (10) CLAMPS & ANY REQUIRED HARDWARE TO CONNECT THE SECTIONS TOGETHER.

RAIL SIZE	ITEM NO.
112-115 LB.	540-0206
132-141 LB.	540-1290

NOTES:

1) USE OF THIS STANDARD FOR NEW CONSTRUCTION IS LIMITED TO INDUSTRIAL LEAD TRACKS, AND SPUR TRACKS WHERE THE AVERAGE DAILY TRAFFIC VOLUME DOES NOT EXCEED 500. USE ON MAIN LINES IS RESTRICTED TO TEMPORARY REPAIRS TO EXISTING CROSSINGS SURFACES.

2) CROSSING SITE IS TO BE INSPECTED PRIOR TO START OF INSTALLATION TO DETERMINE THAT PROPER DRAINAGE AND SURFACE SUPPORT IS PROVIDED, TRACK GRADE IS UNIFORM.

3) FOR COMPLETE RENEWAL OF CROSSING & NEW CONSTRUCTION: TRACK STRUCTURE INCLUDING RAIL, OTM, TIES, BALLAST, AND ROADBED MUST BE IN EXCELLENT CONDITION. ALL TIES MUST BE 9 FT. LONG, SPACED AT 19 1/2" CENTERS AND EXTEND 5 TIES BEYOND END OF CROSSING. NEW 7"X9"X9' TRACK TIES TO BE INSTALLED IF NECESSARY. IF CONDITIONS WARRANT, SITE IS TO BE OVER-EXCAVATED AND CROSSING DRAINAGE SYSTEM INSTALLED USING COMPACTED, WELL-GRADED GRANULAR FILL; SUBBALLAST, GEOTEXTILE, AND PERFORATED DRAINAGE PIPE (IF REQUIRED) INSTALLED PER DETAILS OF THIS DRAWING. ADDITIONAL SITE DRAINAGE INCLUDING PROPER DRAINAGE AT EACH QUADRANT OF CROSSING SHALL BE COMPLETED TO ENSURE CROSSING DRAINAGE. SUBBALLAST SECTION TO BE A MINIMUM OF 4" WHEN COMPLETE RENEWAL OF EXISTING CROSSING. FOR NEW CONSTRUCTION, SUBBALLAST SECTION TO BE IN ACCORDANCE WITH CONSTRUCTION DESIGN STANDARDS OR AS REQUIRED BY STATE OR LOCAL AGENCIES. USE OF GEOTEXTILE AND DRAINAGE PIPE TO BE ONLY AT LOCATIONS WHERE REQUIRED BY STATE OR LOCAL AGENCIES OR WHERE SPECIFICALLY DESIGNATED BY CHIEF ENGINEER.

4) IN ALL INSTALLATIONS THE RAIL JOINTS SHOULD FALL OUTSIDE THE CROSSING AREA A MINIMUM OF 15 FEET FROM THE END OF THE CROSSING.

5) USE OF CLAMPS ARE REQUIRED IN EACH TIE CRIB WITHIN THE LIMITS OF THE CROSSING. CLAMPS MUST BE ATTACHED PRIOR TO PLACEMENT OF ASPHALTIC CONCRETE (SEE SECTION DETAILS).

6) HOT MIX ASPHALTIC CONCRETE MUST COMPLY WITH STATE D.O.T. SPECIFICATIONS AND BE PLACED IN 2 INCHES MINIMUM & 4 INCHES MAXIMUM LIFTS. CARE MUST BE TAKEN DURING COMPACTION OF ASPHALT TO PREVENT DAMAGE TO HOLD DOWN CLAMPS OR RUBBER. ASPHALT SHOULD BE ROLLED PARALLEL TO THE RAIL UNTIL THE FINAL LIFT AND COMPACTION. FINAL LIFT OF ASPHALT IS TO BE LEVEL WITH THE TOP OF RAIL FOR 30 INCHES FROM THE FIELD SIDE OF THE RAIL.

7) SLOPE EDGE OF PAVING TO RETURN TO ORIGINAL EDGE OF PAVING ALIGNMENT. LENGTH OF TRANSITION WILL DEPEND ON LOCAL CONDITIONS.

8) AT THE TIE-IN POINT WITH THE EXISTING PAVEMENT, THE OLD PAVEMENT MUST BE CUT DOWN A MINIMUM 2" TO ELIMINATE A FEATHER EDGE ON THE NEW PAVEMENT.

9) USE STATE D.O.T. SPECIFICATION FOR THE ASPHALT SPRAY TACK COAT.

10) ENVIRONMENTAL RULES OF THE GOVERNMENT BODY HAVING AUTHORITY WILL BE FOLLOWED WHEN DISPOSING OF THE PAVEMENT REMOVED FROM THE CROSSING.

11) MATERIAL USED ON GAGE SIDE RAIL SEAL SHALL HAVE AN ELECTRICAL RESISTANCE OF A MINIMUM OF 10 MEGOHMS AT 500 VOLTS DC.

12) REPORT CROSSING GATE MALFUNCTIONS TO 24 HR UPRR CROSSING HOT LINE AT 1-800-848-8715.

13) ALL EXCEPTIONS TO THIS PLAN MUST BE APPROVED BY THE CHIEF ENGINEER.

UNION PACIFIC RAILROAD ENGINEERING STANDARDS

LIGHT DUTY ROAD CROSSING ASPHALT WITH RUBBER SEAL SECTIONS

UNION PACIFIC

ADOPTED: FEB. 3, 2001
REVISED: DEC. 17, 2001
FILE NO.: 0302A

STD DWG
0302A

STD DWG
0302A

Copyright © 2001 by Union Pacific Railroad

CONFORMED

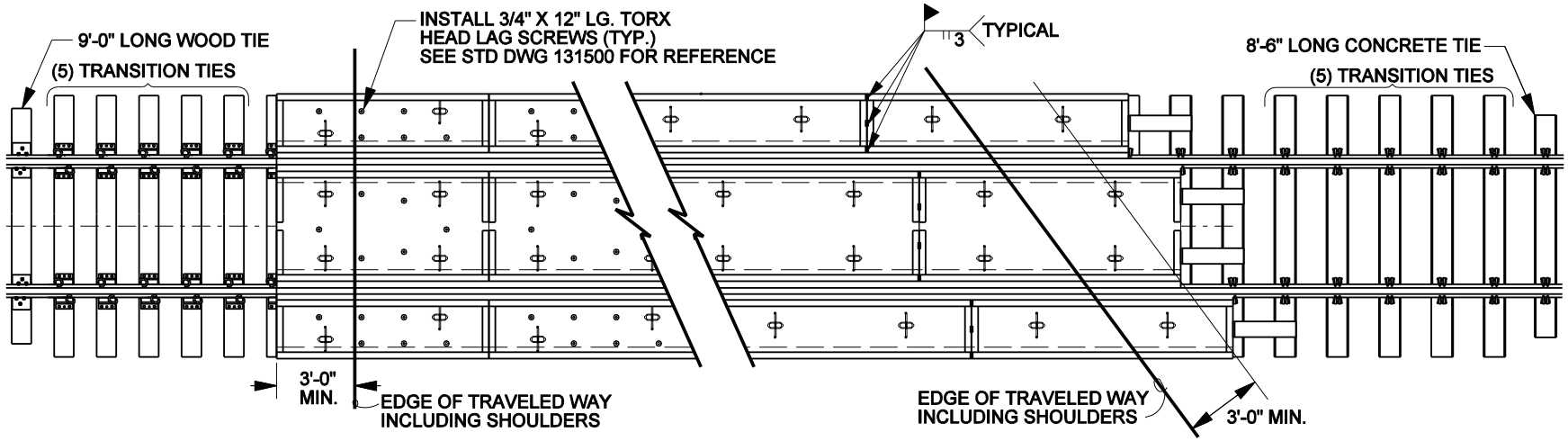

PLAN VIEW OF PANEL WITH TIMBER TIES

PLAN VIEW OF PANEL & JOINT WELD LOCATION W/CONCRETE TIES

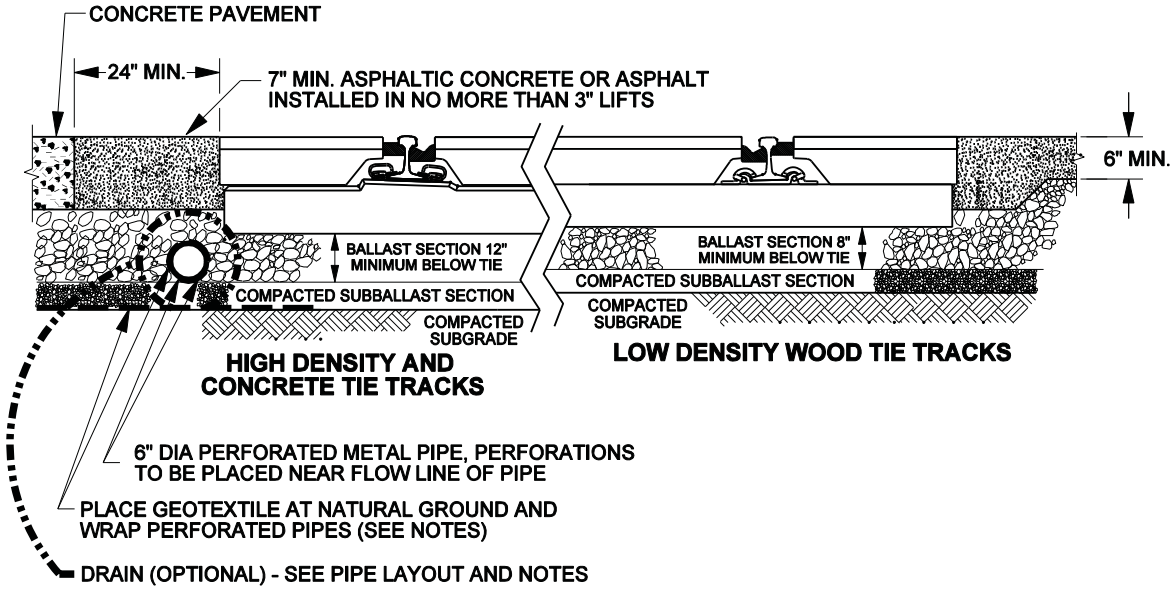

TYPICAL BALLAST AND ASPHALT DETAIL

NOTES:
SEE PAGE 2 FOR NOTES AND MORE DETAILS.

UNION PACIFIC RAILROAD ENGINEERING STANDARDS

INSTALLATION OF ROAD CROSSINGS W/ PRECAST CONCRETE PANELS

APPROVED: VP ENGINEERING
ADOPTED: DEC. 19, 1987
REVISED: JAN. 17, 2011
FILE NO.: 0304H

STD DWG
0304H
PAGE 1 OF 2

STD DWG
0304H
PAGE 1 OF 2

Copyright © 2011 by Union Pacific Railroad

CONFORMED

NOTES:

1. CROSSING PANEL SUPPORT THROUGH THE CROSSING MUST BE UNIFORM. CONCRETE TIE SPACING IS TO BE A MAXIMUM OF 24" CENTER TO CENTER. WOOD TIE SPACING TO BE MAXIMUM OF 19 1/2" CENTER TO CENTER. TIE SPACING MUST BE ADJUSTED TO SUPPORT THE ENDS OF THE PANELS

2. CROSSING SITE IS TO BE INSPECTED PRIOR TO START OF INSTALLATION TO DETERMINE THAT PROPER DRAINAGE AND SURFACE SUPPORT IS PROVIDED, TRACK GRADE IS UNIFORM AND EXISTING TIES ARE AT LEAST 10' LONG.

3. IF CONDITIONS WARRANT, SITE IS TO BE OVER-EXCAVATED AND CROSSING DRAINAGE SYSTEM INSTALLED USING COMPACTED, WELL GRADED GRANULAR FILL; SUBBALLAST, GEOTEXTILE AND PERFORATED DRAINAGE PIPE (IF REQUIRED) INSTALLED PER DETAILS OF THIS DRAWING.

4. ADDITIONAL SITE DRAINAGE INCLUDING PROPER DRAINAGE AT EACH QUADRANT OF CROSSING SHALL BE COMPLETED TO ENSURE CROSSING DRAINAGE.

5. PRECAST PANELS ARE TO BE HANDLED AND SUPPORTED AT SPECIFIED LIFTING INSERT LOCATIONS ONLY. LIFTING EQUIPMENT AND CONNECTION INSERTS ARE TO BE PROPERLY SIZED TO HANDLE THE LENGTH OF PANELS BEING INSTALLED. RING LIFTING DEVICES ARE AVAILABLE FROM COMPANY WAREHOUSE

6. APPROACH ASPHALT ROADWAY PAVING IS TO MEET STATE DOT HIGHWAY SPECIFICATIONS AND INSTALLED ACCORDINGLY. ASPHALT IS TO BE INSTALLED WITH PAVER WITH MAXIMUM 3" LIFTS AND LAID PARALLEL TO CROSSING TO MINIMIZE APPROACH SETTLEMENTS.

7. GEOTEXTILE AND PIPE TO BE INSTALLED ONLY AT LOCATIONS WHERE REQUIRED BY STATE OR LOCAL AGENCIES OR WHERE DESIGNATED BY CHIEF ENGINEER.

8. GALVANIZED ELASTIC FASTENERS ARE TO BE USED WITHIN THE CROSSING AREA. PANDROL E-CLIPS TO BE USED ON WOOD TIE CROSSINGS AND SAFELOK CLIPS ON CONCRETE TIE CROSSINGS.

9. ALL RAIL JOINTS IN CROSSING AREA TO BE WELDED, DO NOT INSTALL BOLTED JOINT BARS.

10. REPORT CROSSING GATE MALFUNCTIONS TO 24 HR UPRR CROSSING HOT LINE AT 1-800-848-8715.

11. ALL EXCEPTIONS TO THIS PLAN MUST BE APPROVED BY THE CHIEF ENGINEER.

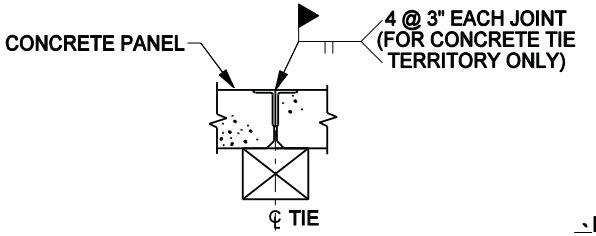

JOINT BETWEEN PANELS

INTERIOR JOINTS BETWEEN PANELS MUST REST ON CENTER LINE OF A WOOD OR CONCRETE TIE AS SHOWN

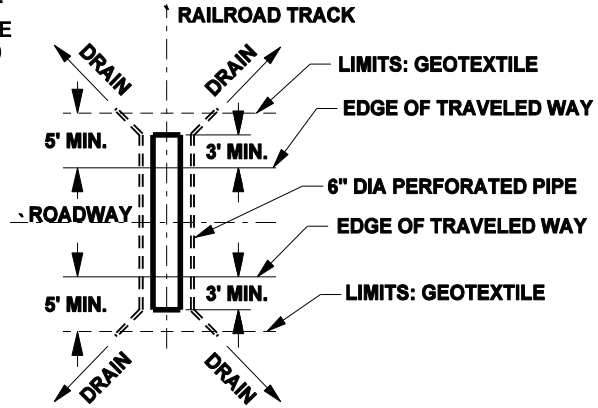

TYPICAL PIPE LAYOUT

NOTE:
GEOTEXTILE & PIPE TO BE INSTALLED ONLY AT LOCATIONS WHERE REQUIRED BY STATE OR LOCAL AGENCIES OR WHERE DESIGNATED BY CHIEF ENGINEER.

REQUIRED COMPONENTS	
RING LIFTING DEVICE	410-1371
3/4" TORX SCREW FOR WOOD TIES (STD DWG 131500)	130-5400
ELASTOMERIC BEARING PAD FOR 141 LB. RAIL ON WOOD TIES	540-0203
CONFORMAL ELASTOMERIC BEARING PAD FOR 10'-0" CONCRETE TIES	503-6315
CONFORMAL ELASTOMERIC BEARING PAD FOR 8'-6" CONCRETE TIES	503-6312
END RESTRAINT FOR CONCRETE TIES (ONLY)	540-1925

OPTIONAL COMPONENTS (SET INCLUDES 6 PIECES)	
20' SECTION 6" PERFORATED PIPE	510-3201
6" ADJUSTABLE ELBOW	510-3557
6" PIPE BANDS	510-3379
100' ROLL GEOTEXTILE	550-0119

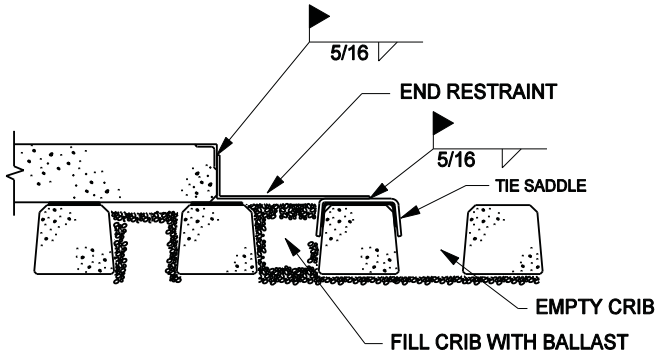

END RESTRAINT DETAIL (FOR CONCRETE TIES ONLY)

UNION PACIFIC RAILROAD ENGINEERING STANDARDS

INSTALLATION OF ROAD CROSSINGS W/ PRECAST CONCRETE PANELS

APPROVED: VP ENGINEERING
ADOPTED: DEC. 19, 1987
REVISED: JAN. 17, 2011
FILE NO.: 0304H

STD DWG 0304H PAGE 2 OF 2

STD DWG 0304H PAGE 2 OF 2

Copyright © 2011 by Union Pacific Railroad

CONFORMED

MATERIAL SPECIFICATIONS:

1) STRUCTURAL STEEL SHALL CONFORM TO ASTM A-36 SPECIFICATIONS. WELDING TO BE PER AWS CODE.

2) ALL EXPOSED STEEL TO RECEIVE ONE COAT PRIMER.

3) END ANGLES FOR GAGE PANEL SHOULD HAVE 3" GAP MINIMUM TO IMPROVE SHUNT RESISTANCE. REINFORCING MATERIAL AND CLADDING TO BE CONSTRUCTED TO MEET SHUNTING REQUIREMENT. A NON-CONDUCTIVE SPACER TO BE ATTACHED TO GAGE FRAME.

4) CLADDING ON ENDS OF PANELS SHOULD EXTEND BEYOND CONCRETE 1/8" (+1/8", -0") TO IMPROVE MATCH WITH ADJACENT PANELS.

5) REINFORCING STEEL SHALL CONFORM TO CURRENT ASTM A615 SPECIFICATION, GRADE 60. IF ANY WELDING OF REINFORCEMENT STEEL IS REQUIRED, MATERIAL SHALL CONFORM TO ASTM A706 SPECIFICATION, GRADE 60.

6) CONCRETE MATERIAL MIXING, PLACING AND CURING TO BE IN ACCORDANCE WITH PCI "MANUAL FOR QUALITY CONTROL: PRECAST AND PRESTRESSED CONCRETE." MANUAL 115, EDITION 4. CEMENT SHALL HAVE NO MORE THAN 0.6% TOTAL ALKALI CONTENT. MAXIMUM WATER/CEMENT RATIO=0.44
(BY WEIGHT). AIR ENTRAINMENT=6%+/- 1% IN PLASTIC CONCRETE. SLUMP 3" MAXIMUM.

7) COPIES OF THE CONCRETE DESIGN MIX TO BE SUBMITTED TO RAILROADS FOR APPROVAL PRIOR TO THE START OF THE CASTING OPERATION.

8) TOP SURFACE SHALL BE NON-CRACK DESIGN AND IS TO BE SEALED TO PREVENT ION MIGRATION DUE TO SALTING.

9) CURING SHALL FOLLOW THE RECOMMENDATIONS AND PROCEDURES OF PCI IN 4TH EDITION DIVISION 4.

10) 3/16" WEEP/INSPECTION HOLES SHALL BE PLACED EVERY 2-FT. MIN. ALONG THE TOP OF THE STEEL FRAME ALONG A LINE 3/4" FROM OUTSIDE EDGE.

11) FLANGEWAY FILLER TO BE PERMANENTLY PREATTACHED AND HAVE THE FOLLOWING PROPERTIES:

* A SAMPLE SECTION OF THE FLANGEWAY MATERIAL SHALL BE PHYSICALLY TESTED BY APPLYING A LATERAL FORCE OF 10 LB/IN AT 50 DEGREES CELSIUS. THE MAXIMUM LATERAL DISPLACEMENT OF THE TEST IS NOT TO EXCEED 1/4" (CROSSING TYPE 10C ONLY). TEST RESULTS MUST BE SUBMITTED FOR RAILROAD APPROVAL.

* MANUFACTURER TO DESIGN THE PREATTACHED FLANGEWAY FILLER TO ALLOW FOR REMOVAL OF PANELS FOR MAINTENANCE WITHOUT DAMAGING THE FLANGEWAY FILLER OR ANY OTHER COMPONENTS DESIGNED TO HOLD IT TOGETHER.

* SEE PAGE 2 FOR MATERIAL SPECIFICATIONS.

TOLERANCES:

1) OUT OF SQUARE 3/16" (MEASURED ALONG THE DIAGONAL)

2) LENGTH, WIDTH, AND THICKNESS: +/-1/8"

3) THE BOTTOM SURFACE, WHICH WILL BE IN CONTACT WITH THE TIES, SHALL NOT UNDULATE IN ANY DIRECTION MORE THAN 3/32". SEE SPECIAL TESTING NOTE 3 BELOW.

4) REINFORCEMENT PLACEMENT SHALL BE +/-3/4" HORIZONTAL, +/-1/8" VERTICAL.

FINISH:

1) ALL RECESSES AND MINOR CONCRETE SPALLS ARE TO BE FILLED AND FINISHED TO THE PANEL DIMENTIONS USING THE PROPER BONDING AGENT AND REPAIR MATERIAL SURFACE OF THE REPAIRED AREA IS TO MATCH THE COLOR AND TEXTURE OF THE SURROUNDING AREAS.

2) THE DRIVING SURFACE IS TO HAVE A LIGHT BROOM FINISH OR AS APPROVED BY RAILROADS. THE ADDITION OF WATER TO THE CONCRETE SURFACE FINISH DURING CASTING IS NOT PERMITTED.

SPECIAL TESTING:

1) TWICE ANNUALY, VENDORS SHALL SUBMIT (VIA AN INDEPENDENT TESTING LABORATORY TO THE RAILROADS) THE FOLLOWING TEST ON THE APPROVED MIXED DESIGN
* ASTM C666 FREEZE/THAW
* ASTM C227 MORTAR BAR METHOD
* ASTM C1260 AT TOTAL ALKALI BURDEN = 0.06%

2) GAGE PANELS SHALL BE DESIGNED WITH SHUNT RESISTANT FEATURES IN ORDER TO PROVIDE A MINIMUM ELECTRICAL RESISTANCE IN ACCORDANCE WITH THE STANDARD ELECTRICAL TEST (DWG 500930).

3) A REPRESENTATIVE SAMPLE OF PANELS SHALL BE CHECKED PERIODICALLY FOR BOTTOM FLATNESS BY USING A STRAIGHT EDGE CALIBRATED TO WITHIN +/-1/32" AND A TAPER GAGE AS FOLLOWS:
8 POSITIONS OF FLATBAR (—) CHECK FLATNESS AT EACH POSITION USING TAPER GAGE.

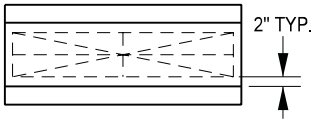

GENERAL:

1) THE MANUFACTURER SHALL BE ISO 9000 OR AAR M-1003 CERTIFIED. ALL TESTING PERSONNEL SHALL BE A MINIMUM OF ACI LEVEL I CERTIFIED.

2) THE FABRICATOR SHALL BE RESPONSIBLE FOR LOADING AND PROPERLY SECURING ALL PRECASTCONCRETE MEMBERS FOR SHIPMENT.

3) THE MANUFACTURER SHALL WARRANTY PRODUCT FOR A MINIMUM OF TEN YEARS AGAINST DEFECTS IN MATERIALS AND WORKMANSHIP.

4) MAUNFACTURER TO PERMANENTLY MARK EACH PANEL WITH A CONCRETE IMPRINT FOR SIZE OF RAIL, WEIGHT OF PANEL, MANUFACTURER'S I.D., MONTH/DAY/YEAR OF MANUFACTURE, AND CROSSING TYPE. END OF EACH PANEL TO BE STENCILED PAINTED WITH SIZE OF RAIL, WEIGHT OF PANEL AND CROSSING TYPE.

UNION PACIFIC RAILROAD ENGINEERING STANDARDS

GENERAL SPECIFICATIONS FOR ROAD CROSSINGS WITH CONCRETE PANELS

UNION PACIFIC

ADOPTED: OCT. 24, 2013
REVISED:
FILE NO.: 0308

STD DWG
0308
PAGE 1 OF 2

STD DWG
0308
PAGE 1 OF 2

CONFORMED

Copyright © 2013 by Union Pacific Railroad

NON-CONDUCTIVE FILLER COMPOUND MATERIAL SPECIFICATIONS

AN ALL EPDM BASED COMPOUND IS TO BE USED IN THE UPRR ATTACHED CONCRETE PANEL FILLERS. IT IS TO HAVE SUPERIOR WEATHERING, AGING AND HEAT RESISTANCE CHARACTERISTICS AND IS TO BE MADE USING ONLY NON-CONDUCTIVE INGREDIENTS AND PIGMENTED SO IT IS A LIGHT NON-MARKING GRAY COLOR.

THE COMPOUND MEETS LINE CALLOUT ASTM D2000 3BA714, A14, B13, C12, F17, Z1, Z2, Z3, Z4, Z5, Z6, Z7
Z1 = ULTIMATE ELONGATION INCREASE TO 400%
Z2 = HARDNESS INCREASE TO 75 +/- 5 SHORE A
Z3 = ADD COMPRESSION SET AT 257°F
Z4 = ADD FLUID RESISTANCE TEST
Z5 = ADD VOLUME RESISTIVITY TEST
Z6 = ADD MEGGAR TEST
Z7 = ADD TEAR STRENGTH

PHYSICAL PROPERTIES	UNIT	REQUIRED	LIMIT	TEST METHOD	TESTING FREQUENCY		
					BATCH	5TH BATCH	ANNUALLY
TENSILE STRENGTH	PSI	1400	MIN	ASTM D412		X	
ELONGATION	% (Z1)	400	MIN	ASTM D412		X	
HARDNESS	SHORE "A" (Z2) DURO POINTS	75	+/- 5	ASTM D2240	X		
HEAT RESISTANCE:				ASTM D573 70 HRS @ 212°F			X
TENSILE STRENGTH	% CHANGE	-25	MAX				
ELONGATION	% CHANGE	-25	MAX				
HARDNESS	POINTS CHANGE	+10	MAX				
COMPRESSION SET	% (Z3)			ASTM D395 B			X
		25	MAX	22 HRS @ 158°F			
		75	MAX	22 HRS @ 257°F			
OZONE RESISTANCE	N/A	PASS	NO CRACKS	ASTM D1171 METHOD B 70 HRS @ 50 pphm @ 104°F			X
FLUID RESISTANCE	% CHANGE (Z4)	+/- 5	MAX	ASTM D471 (WATER) 70 HRS @ 212°F			X
LOW TEMPERATURE BRITTLENESS	N/A	PASS	NO CRACKS	ASTM D2137 CONDITIONED 3 MIN @ -40°F IN METHANOL			X
VOLUME RESISTIVITY	OHM-CM (Z5)	1.0×10^{12}	MIN	ASTM D257 (DRY)			X
VOLUME RESISTIVITY	OHM-CM (Z5)	1.0×10^{11}	MIN	ASTM D257 (CONDITIONED IN AN 18% NaCl SOLUTION FOR 168 HRS @ 25°C)			X
VOLUME RESISTIVITY - COMPRESSION	OHM-CM (Z5)	1.0×10^{12}	SEE NOTE 1	VOL RESISTIVITY ASTM D257 WHILE UNDER COMPRESSION PER ASTM D575 A (SEE NOTE 10)			X
MEGGAR TEST	OHM (Z6)	2G OHM	SEE NOTE 1	UPRR TEST (SEE NOTE 11)		X	
TEAR STRENGTH	lb/in (Z7)	150	MIN	ASTM D624 DIE "C"			X
RHEOMETER	N/A	NONE	SEE NOTE 1	ASTM D2084	X		
SPECIFIC GRAVITY	SG	NONE	SEE NOTE 1	ASTM D297	X		

NOTES:
1. TEST RESULTS FROM A REPRESENTATIVE SAMPLE ALONG WITH RECOMMENDED TOLERANCES ARE TO BE SUBMITTED TO UPRR FOR REVIEW AND APPROVAL.
2. A SAMPLE OF THE PROPOSED MATERIAL IS TO BE SUBMITTED TO UPRR FOR REVIEW AND APPROVAL.
3. MATERIAL SPECIFICATIONS APPLY TO BOTH GAGE SIDE AND FIELD SIDE FLANGEWAY MATERIAL.
4. ANY CHANGES IN MATERIAL COMPOSITION OF THE APPROVED SAMPLE WILL REQUIRE PRIOR APPROVAL FROM UPRR.
5. MANUFACTURER SHALL BE ISO 9001-2000 OR AAR M-1003 CERTIFIED.
6. ALL PERSONELL CONDUCTING MATERIAL TESTING SHALL BE AALA CERTIFIED FOR CONDUCTING MECHANICAL TESTING. ANY ALTERNATIVE LAB ACCREDITION WILL REQUIRE PRIOR APPROVAL.
7. MANUFACTURER SHALL MAINTAIN RECORDS FOR 10 YEARS AND RECORDS ARE TO BE OPEN TO REVIEW BY AUTHORIZED UPRR REPRESENTATIVES.
8. MANUFACTURER TO WARRANTY MATERIALS FOR 10 YRS.
9. EACH BATCH SHALL BE MARKED WITH A UNIQUE IDENTIFIER THAT WILL PERMIT TRACKING OF THE MATERIAL. EACH SAMPLE SHALL BE MARKED INDICATING IT IS "UPRR APPROVED".
10. REFER TO: VOLUME RESISTIVITY - COMPRESSION TESTS FOR ANNUAL MATERIAL CERTIFICATION 12-20-05
11. REFER TO: INSULATION RESISTANCE TESTING OF CONCRETE CROSSING PANEL FLANGEWAY FILLER - BOTH CENTER AND FIELD PANELS 12-19-05

UNION PACIFIC RAILROAD ENGINEERING STANDARDS

GENERAL SPECIFICATIONS FOR ROAD CROSSINGS WITH CONCRETE PANELS

UNION PACIFIC

ADOPTED: OCT. 24, 2013
REVISED:
FILE NO.: 0308

STD DWG
0308
PAGE 2 OF 2

STD DWG
0308
PAGE 2 OF 2

CONFORMED

Copyright © 2013 by Union Pacific Railroad

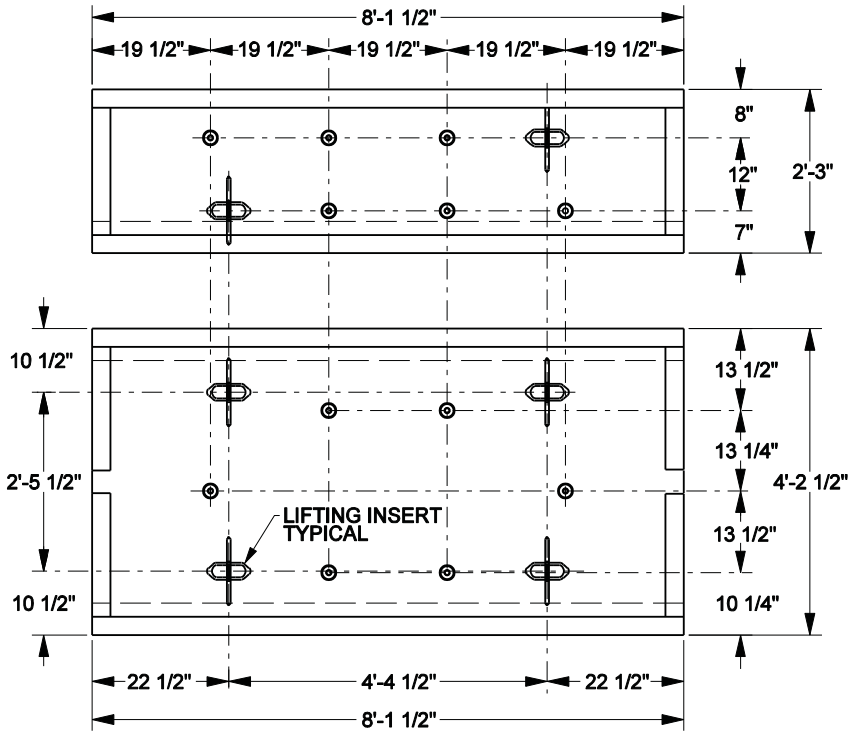

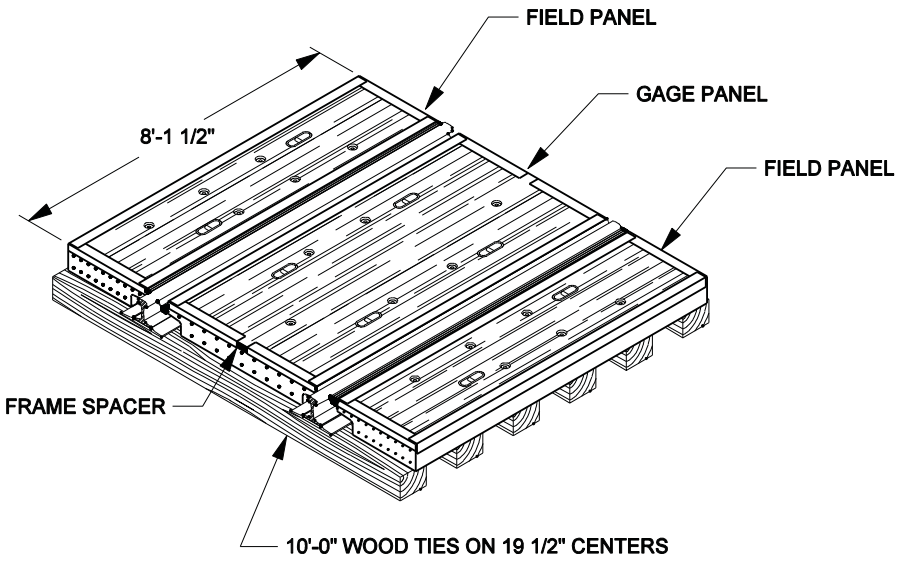

NOTES:
1/4" RUBBER INTERFACE PAD TO BE PLACED BETWEEN PANEL AND TIES FOR 141 LB. RAIL SECTION. PAD TO BE NAILED TO TIES,

CROSSING TYPE - 10W

RAIL SIZE	PANEL HEIGHT	GAGE PANEL WEIGHT	FIELD PANEL WEIGHT
115	7 1/8"	2850 LBS.	1550 LBS.
132-141	7 7/8"	3125 LBS.	1675 LBS.

BNSF RAILWAY

COMMON STANDARDS

LAYOUT FOR CONCRETE PANELS ON 10'-0" LONG WOOD TIES (10W)

ITEM NUMBERS				
141 LB. BNSF	133-141 LB. UPRR	132-136 LB. BNSF	115 LB. UPRR	115 LB. BNSF
054374616	540-1301	004935722	540-0202	004935706

FILE OWNER: UPRR | DATE: DEC. 6, 2010

REV. NO.: 2 | DWG NO: 200100

200100

CONFORMED

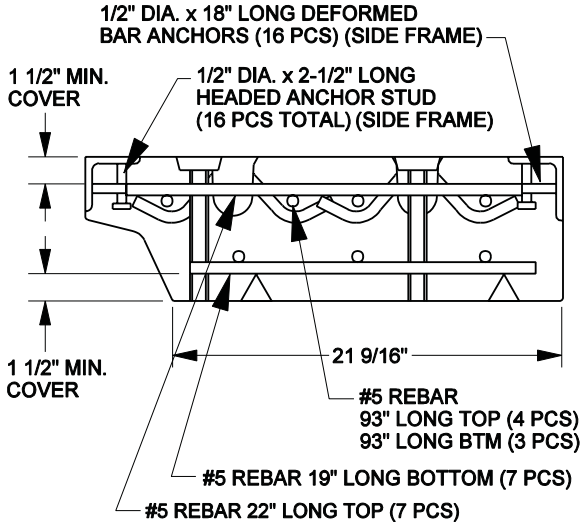

CROSS SECTION - FIELD PANEL

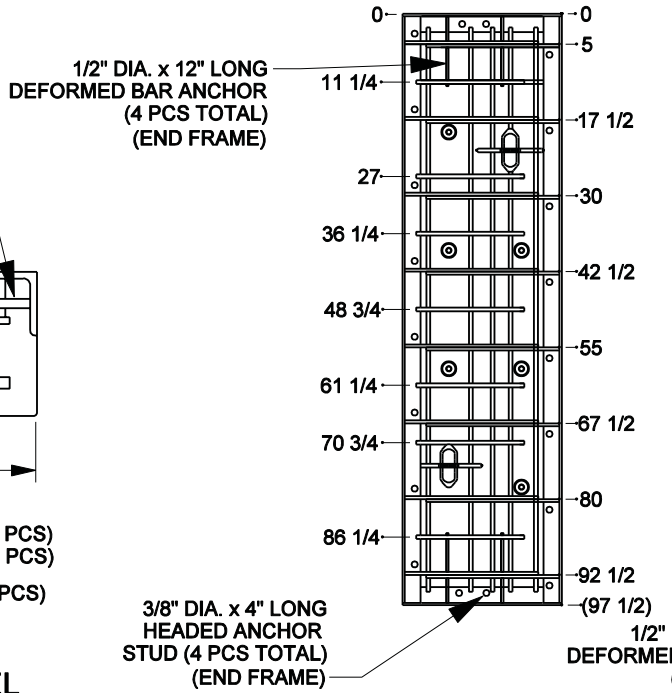

FIELD PANEL

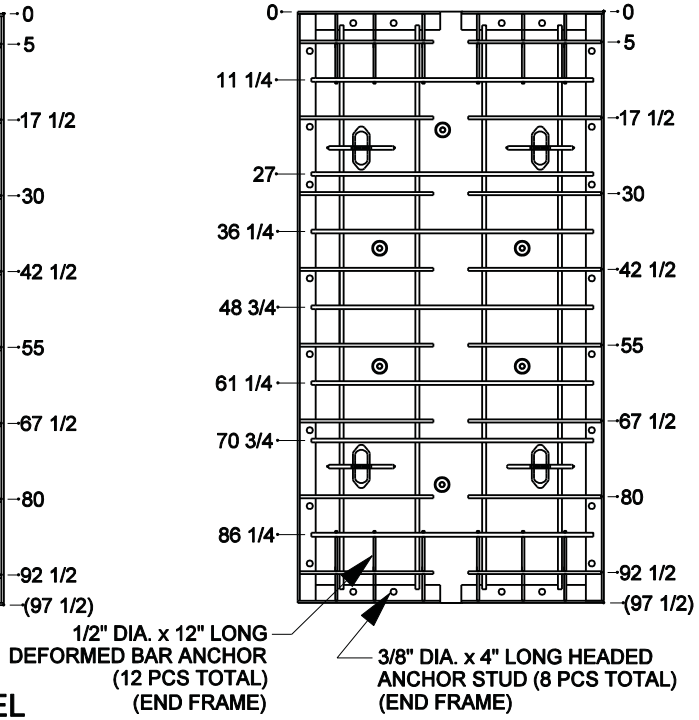

GAGE PANEL

NOTES:
CONCRETE COMPRESSIVE STRENGTH SHALL BE AS FOLLOWS:
@ 28DAYS = 6000 psi MINIMUM
@ SHIPMENT = 4000 psi MINIMUM
@ REMOVAL FROM FORMS = 2500 psi MINIMUM.

CROSSING TYPE - 10W

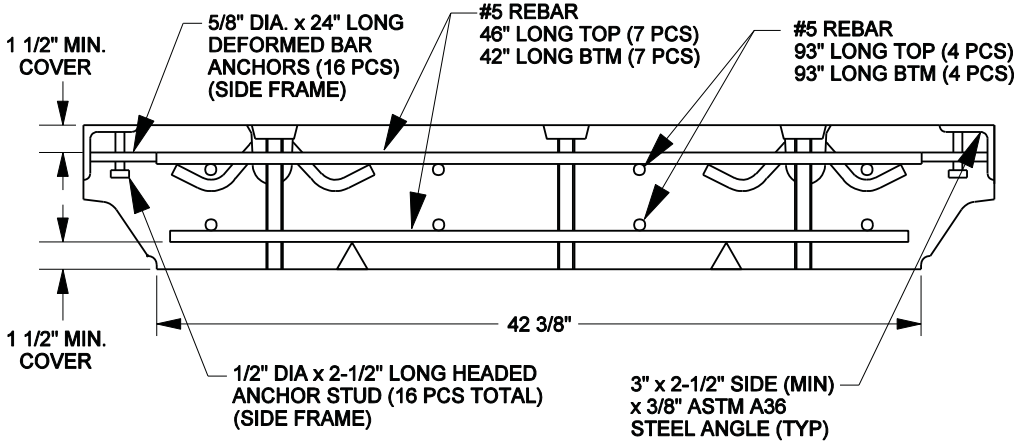

CROSS SECTION - GAGE PANEL

BNSF RAILWAY

UNION PACIFIC

COMMON STANDARDS

PRECAST CONCRETE PANELS FOR 10'-0" LONG WOOD TIES (10W)

UPRR VP ENGINEERING

BNSF VP ENGINEERING

FILE OWNER: UPRR	DATE: NOV. 6, 2009
REV. NO.: 2	DWG NO: 200102

200102

CONFORMED

200902

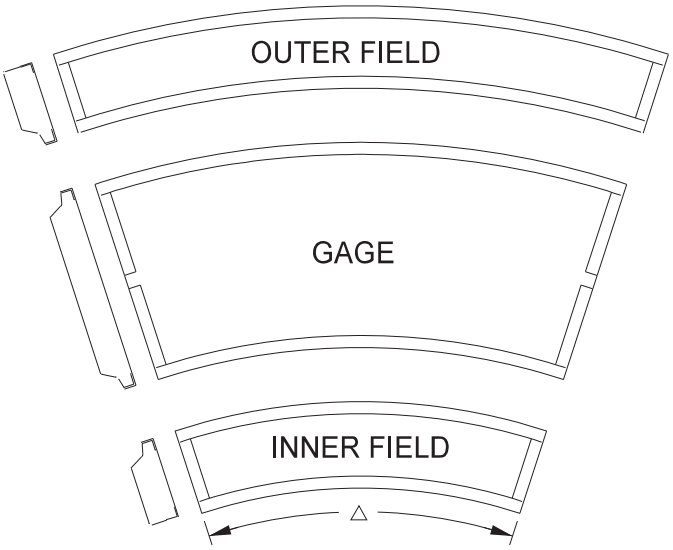

(SEE PANEL CURVATURE TABLES)

CURVATURE TABLE
(ON CONCRETE TIES)

DEGREE OF CURVE	RADIUS IN FEET	△	CURVE PANEL?
2° OR LESS	2865'	0.20°	NO
3°	1910'	0.30°	YES
4°	1433'	0.40°	YES
5°	1146'	0.50°	YES
6°	955'	0.60°	YES
7°	819'	0.70°	YES
8°	717'	0.80°	YES
9°	637'	0.90°	YES
10°	574'	1.00°	YES
11°	522'	1.10°	YES
12°	478'	1.20°	YES
13°	442'	1.30°	YES
14°	410'	1.40°	YES

CURVATURE TABLE
(ON WOOD TIES)

DEGREE OF CURVE	RADIUS IN FEET	△	CURVE PANEL?
3° OR LESS	1910'	0.24°	NO
4°	1433'	0.32°	YES
5°	1146'	0.40°	YES
6°	955'	0.48°	YES
7°	819'	0.56°	YES
8°	717'	0.66°	YES
9°	637'	0.74°	YES
10°	574'	0.82°	YES
11°	522'	0.90°	YES
12°	478'	0.98°	YES
13°	442'	1.06°	YES
14°	410'	1.14°	YES

NOTES:
A CURVED PANEL IS A PANEL THAT IS PIE SHAPED WITH A LONGER OUTER LENGTH THAN THE INNER LENGTH WITH TRUE RADIUSED OUTER AND INNER STEEL.

CURVED PANELS USE STANDARD REINFORCEMENT SIMILAR TO TANGENT PANEL STANDARD REINFORCEMENT.

LAG HOLES ON 10W AND 9W CROSSINGS MUST LINE UP WITH THE CENTERLINE OF TIES.

XING TYPE (RAIL WT.)	BNSF ITEM NO.	UPRR ITEM NO.
10W (115)	055590002	NON-STOCK
10W (133-141)	055590001	NON-STOCK
9W	NON-STOCK	NON-STOCK
10C	NON-STOCK	NON-STOCK
85C	NON-STOCK	NON-STOCK

COMMON STANDARDS

CURVED CONCRETE PANELS

FILE OWNER: UPRR	DATE: APRIL 24, 2001
REV. NO.: 0	DWG NO:200902

CONFORMED

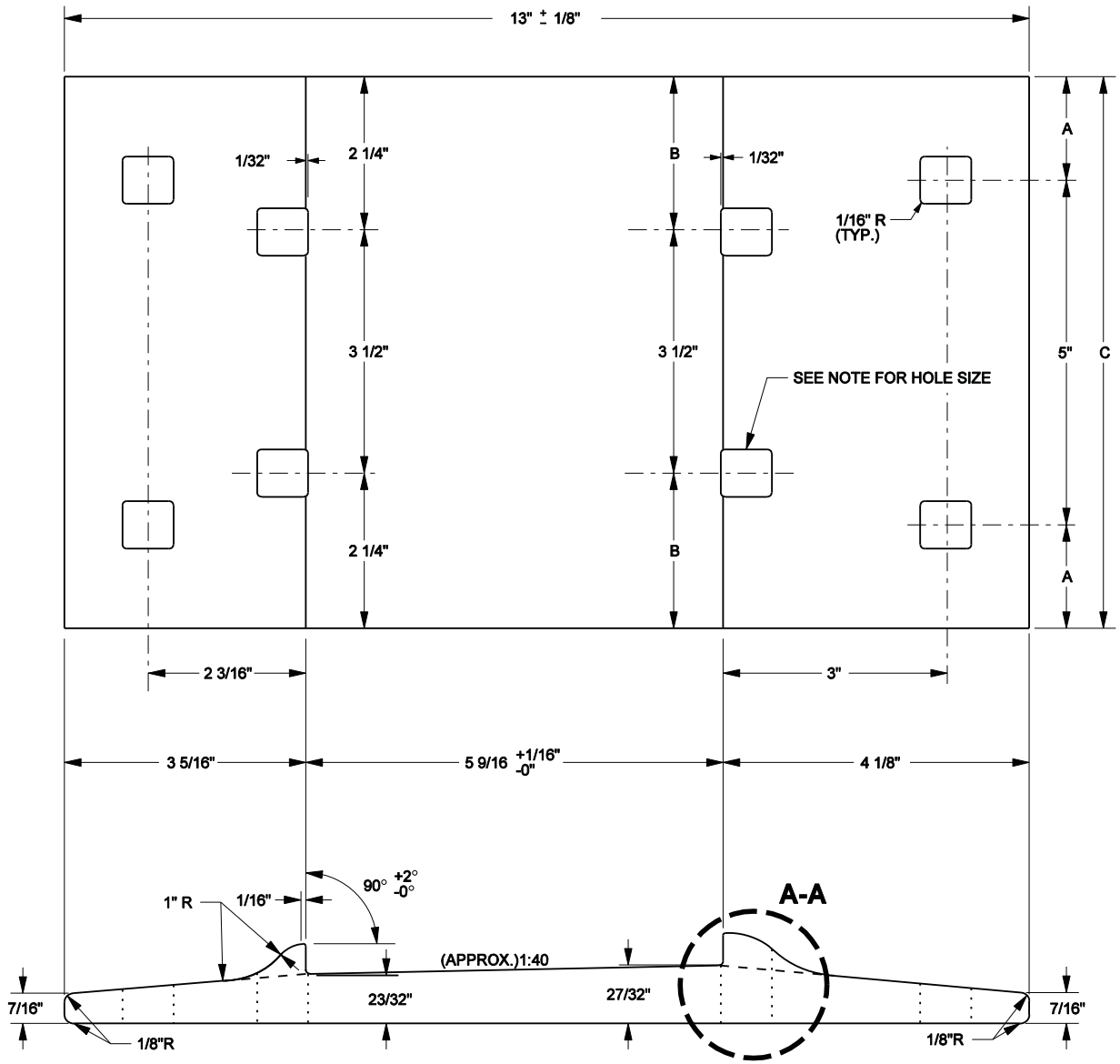

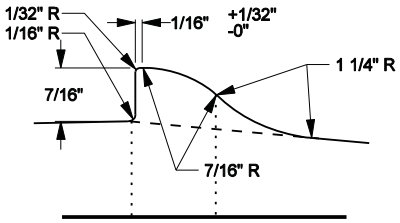

DETAIL A-A

NOTES:
1. ALL SPIKE HOLES: U.P. TO BE 11/16" SQUARE AND CNW TO BE BE 3/4" SQUARE.
2. SPECIFICATIONS AND WORKMANSHIP TO BE IN ACCORDANCE WITH CURRENT A.R.E.A. MANUAL REQUIREMENTS FOR HOT-WORKED, HIGH CARBON STEEL TIE PLATES.
3. ROLL MANUFACTURER'S IDENTITY, U.P. RAIL SECTION AND YEAR ROLLED ON TOP OF FIELD SIDE OF TIE PLATE.
4. REF PREVIOUS U.P. STD DWG PAGE 2007 AND PREVIOUS M.P. STD DWG NO.412.2A

	A	B	C	ITEM NO.
M.P.	1 1/2"	2 1/4"	8"	554-3779
CNW	1 3/8"	2 1/8"	7 3/4"	554-2015

UNION PACIFIC RAILROAD ENGINEERING STANDARDS

DOUBLE SHOULDER TIE PLATE FOR 5 1/2" BASE RAIL

APPROVED: VP ENGINEERING
ADOPTED: SEP. 23, 1949
REVISED: JAN. 8, 2010
FILE NO.: 0440B

STD DWG 0440B

STD DWG 0440B

Copyright © 2010 by Union Pacific Railroad

CONFORMED

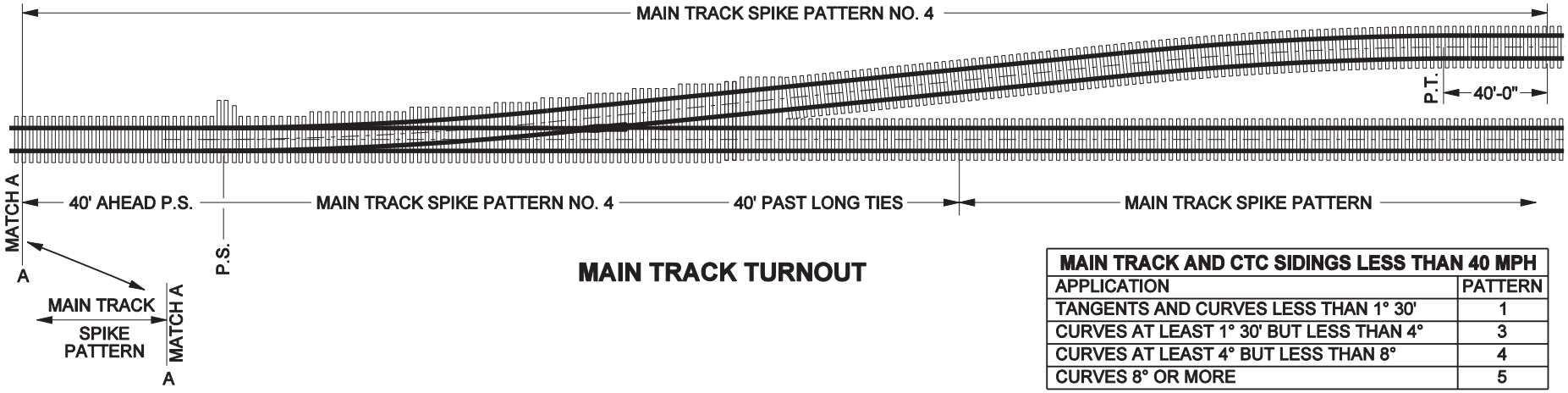

MAIN TRACK TURNOUT

MAIN TRACK AND CTC SIDINGS LESS THAN 40 MPH	
APPLICATION	PATTERN
TANGENTS AND CURVES LESS THAN 1° 30'	1
CURVES AT LEAST 1° 30' BUT LESS THAN 4°	3
CURVES AT LEAST 4° BUT LESS THAN 8°	4
CURVES 8° OR MORE	5

MAIN TRACK AND CTC SIDINGS 40 MPH OR MORE	
APPLICATION	PATTERN
TANGENTS AND CURVES LESS THAN 30'	2
CURVES AT LEAST 30' BUT LESS THAN 1° 30'	3
CURVES AT LEAST 1° 30' BUT LESS THAN 4°	4
CURVES 4° OR MORE	5

YARD AND INDUSTRY TRACKS	
APPLICATION	PATTERN
TANGENTS AND CURVES LESS THAN 4°	1
CURVES AT LEAST 4° BUT LESS THAN 8°	3
CURVES 8° OR MORE	4

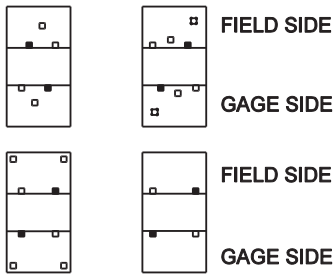

SPIKING PATTERN NO. 1

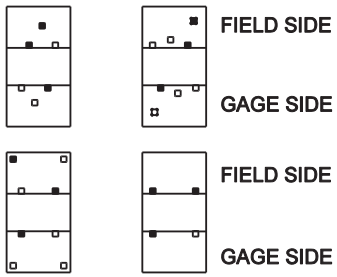

SPIKING PATTERN NO. 2

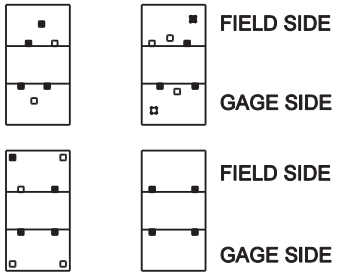

SPIKING PATTERN NO. 3

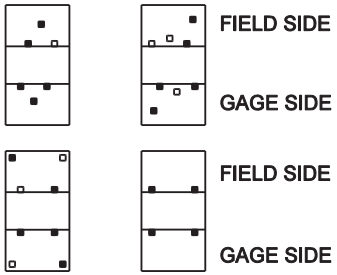

SPIKING PATTERN NO. 4

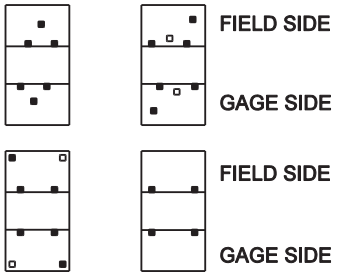

SPIKING PATTERN NO. 5

■ - DENOTES SPIKE FILLED HOLE

NOTES:
1. THE SPIKE PATTERNS SHOWN ARE FOR MAIN TRACKS, BRANCH LINE TRACKS, HEAVY TONNAGE SPURS, AND C.T.C. SIDINGS WITH 13" AND LONGER PLATES.
2. ANY SPIKING PATTERN OTHER THAN WHAT IS SHOWN ON THIS DRAWING ARE TO BE APPROVED BY THE CHIEF ENGINEER.

UNION PACIFIC RAILROAD ENGINEERING STANDARDS

SPIKING PATTERN

UNION PACIFIC

ADOPTED: DEC. 31, 1996
REVISED: JUL. 17, 2007
FILE NO.: 0453D

STD DWG
0453D

STD DWG
0453D

Copyright © 2005 by Union Pacific Railroad

CONFORMED

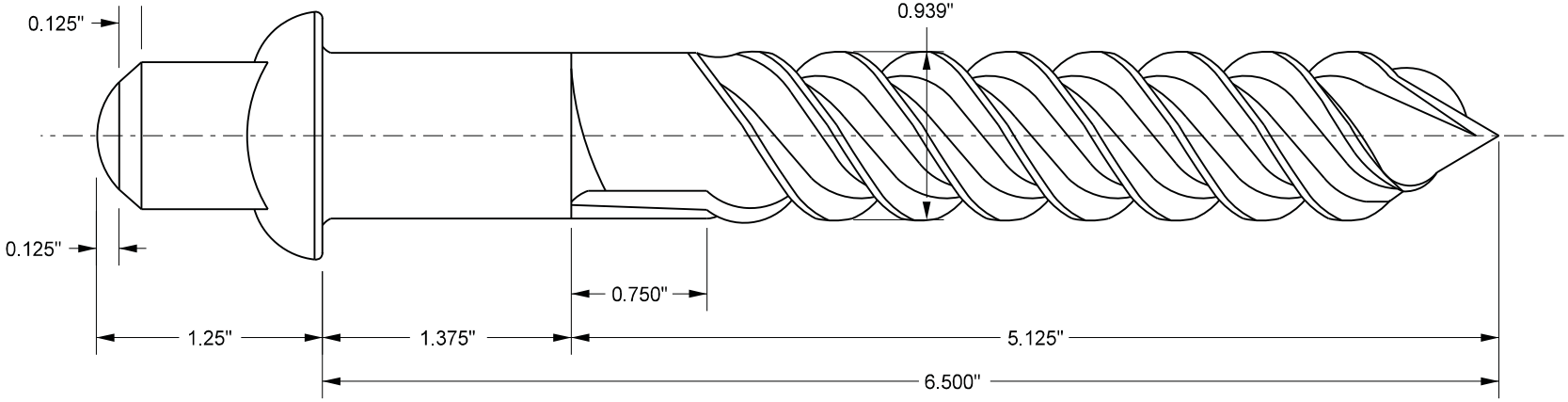

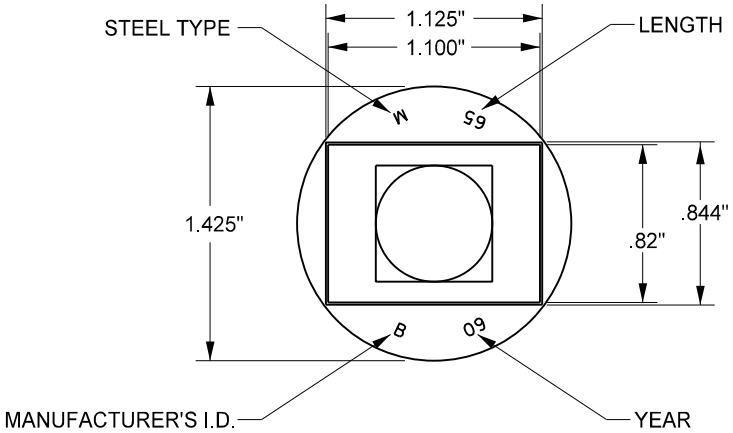

TOP VIEW OF HEAD

NOTES:
1. EVERGRIP LAG SCREW REQUIRES A 3/4" PRE-DRILL.
2. LAGS MAY SHALL BE SCREWED IN USING A HYDRAULIC IMPACT OR PRODUCTION LAGGER.
3. EVERGRIPS WILL NOT BE REMOVED USING A SPIKE PULLER. LAGS MUST BE REMOVED USING A IMPACT OR DE-LAGGER.

UNION PACIFIC RAILROAD ENGINEERING STANDARDS

EVERGRIP LAG SCREW

DESCRIPTION	ITEM NO.
EVERGRIP TIMBER LAG SCREW	503-8623
DRILL BIT 3/4"	414-0500
SOCKET FOR 1" DRIVE IMPACT WRENCH	570-3747
SOCKET FOR 3/4" DRIVE GE SMART	570-3745

CONFORMED

UNION PACIFIC

ADOPTED: APR. 13, 2011
REVISED: JAN. 18, 2013
FILE NO.: 0454A

STD DWG
0454A

STD DWG
0454A

Copyright © 2013 by Union Pacific Railroad

CONTINUOUS WELDED RAIL (NEW INSTALLATION):

1) BOX ANCHOR EVERY OTHER TIE (USE PATTERN #1). ANCHORING NOT REQUIRED ON TIES WITH ELASTIC FASTENERS.

2) CHIEF ENGINEER MAY AUTHORIZE ADDITIONAL ANCHORS TO BE INSTALLED ON CONCRETE OR WOOD TIES WHERE INCREASED RAIL RESTRAINT IS DESIRED. SUCH LOCATIONS MAY BE: SUBDIVISIONS EXPECTED TO HANDLE 95MGT OR MORE ANNUALLY, OPEN JOINTS IN CWR TERRITORY, HEAVY TRAIN BRAKING GRADES, ETC.

JOINTED RAIL (NEW INSTALLATION):

BOX ANCHOR EVERY OTHER TIE (USE PATTERN #1)

JOINTED RAIL TURNOUTS (NEW INSTALLATION):

1) BOX ANCHOR EVERY TIE (USE PATTERN #2).

2) BOX ANCHOR 48 TIES AHEAD OF POINT OF SWITCH AND BEHIND LAST TURNOUT TIE (USE PATTERN #2).

TURNOUTS (NEW INSTALLATION):

1) BOX ANCHOR EVERY TIE (USE PATTERN #2).

2) BOX ANCHOR EVERY TIE 120 TIES AHEAD OF POINT OF SWITCH AND BEHIND LAST TURNOUT TIE (USE PATTERN #2).

OPEN DECK BRIDGES:

BOX ANCHOR EVERY TIE120 TIES AWAY IN BOTH DIRECTIONS ON CONCRETE AND WOOD TIES (USE PATTERN #2).

HOT BOX / DRAGGING EQUIPMENT DETECTORS:

BOX ANCHOR 120 TIES AWAY IN BOTH DIRECTIONS ON WOOD TIES ONLY (USE PATTERN #2). ANCHORING NOT REQUIRED ON TIES WITH ELASTIC FASTENERS.

INSULATED JOINTS

BOX ANCHOR EVERY TIE 120 TIES AWAY FROM THE INSULATED JOINT IN BOTH DIRECTIONS ON WOOD TIES ONLY (USE PATTERN #2). ANCHORING NOT REQUIRED ON TIES WITH ELASTIC FASTENERS.

CROSSING FROGS

BOX ANCHOR EVERY TIE 120 TIES AWAY FROM THE CROSSING FROG IN ALL DIRECTIONS ON CONCRETE AND WOOD TIES (USE PATTERN #2).

ROAD CROSSINGS

BOX ANCHOR EVERY TIE THROUGH THE CROSSING LIMITS ON WOOD TIES ONLY (USE PATTERN #2). ANCHORING NOT REQUIRED ON TIES WITH ELASTIC FASTENERS.

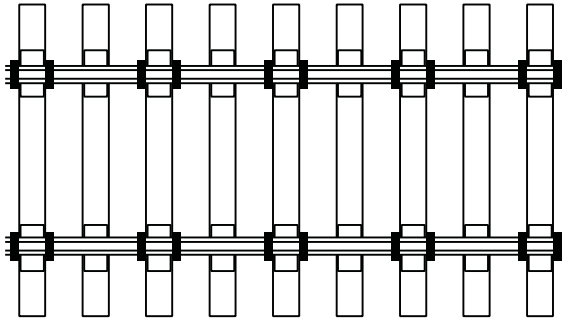

ANCHOR PATTERN #1

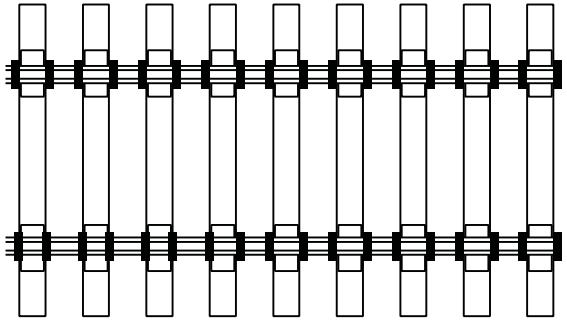

ANCHOR PATTERN #2

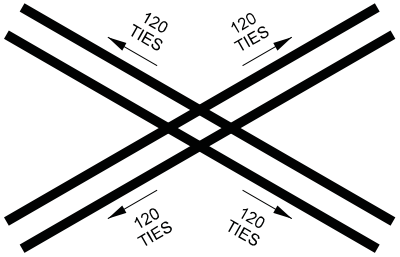

CROSSING FROGS

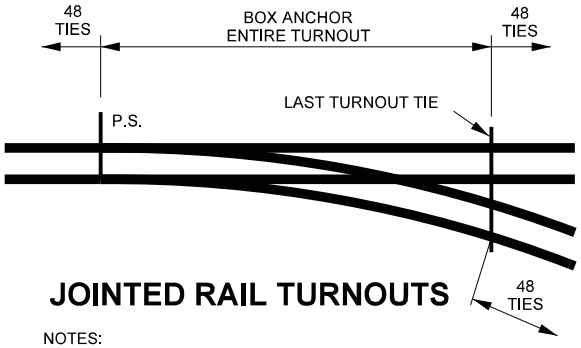

JOINTED RAIL TURNOUTS

NOTES:

1. ANCHOR PATTERN #1 WILL BE USED FOR ALL RAIL RELAYS. EXISTING ANCHOR PATTERNS MAY REMAIN UNTIL A RAIL RELAY IS DONE.
2. WHERE ELASTIC FASTENERS FAIL TO PROPERLY RESTRAIN THE RAIL FROM MOVING LONGITUDINALLY, INSTALL ADDITIONAL ANCHORS AS REQUIRED.
3. WHERE PRACTICAL, ANCHOR TO BE INSTALLED FROM GAGE SIDE OF RAIL.
4. USE AN ANCHOR WITH AN ISOLATOR ON CONCRETE TIE APPLICATIONS (ITEM NO. 550-1652).
5. IN A CURVE, IF THERE ARE ELASTIC FASTENERS ON ONE RAIL, BUT NOT BOTH, USE ANCHOR PATTERN #1 ON THE RAIL WITHOUT ELASTIC FASTENERS.

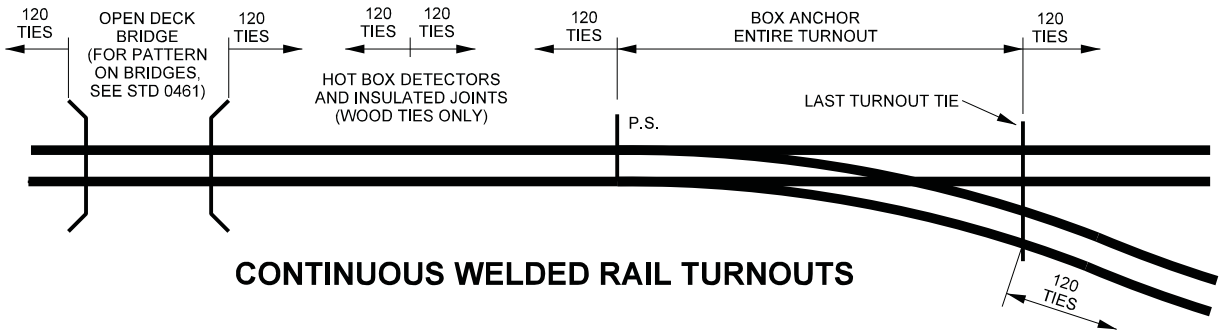

CONTINUOUS WELDED RAIL TURNOUTS

UNION PACIFIC RAILROAD ENGINEERING STANDARDS

RAIL ANCHOR PATTERNS FOR NEW RAIL INSTALLATIONS

ADOPTED: DEC. 31, 1996
REVISED: JAN. 17, 2014
FILE NO.: 0460G

STD DWG
0460G

STD DWG
0460G

CONFORMED

Copyright © 2014 by Union Pacific Railroad

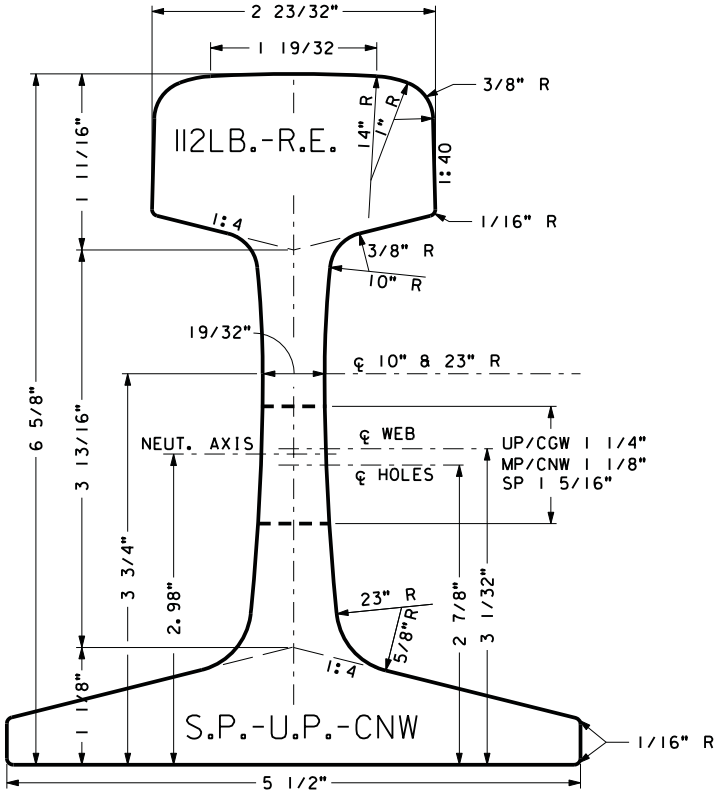

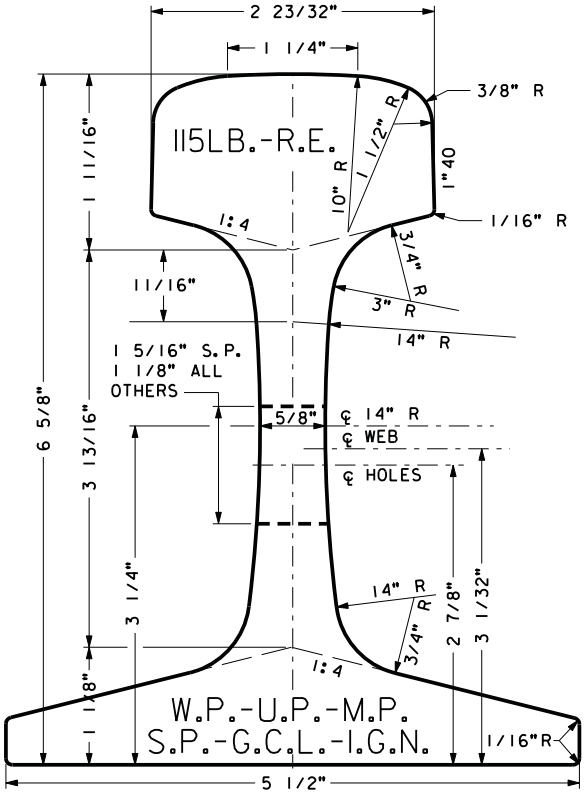

U. P. { *2 15/16 -6 1/2 | *2 15/16 -6 1/2 -6 1/2
**6 1/2 -6-6 1/2 | **6 1/2 -6 1/2 -6-6 1/2 -6 1/2

CNW S. P. { *2 1/2 -6 1/2 -6 1/2

W. P. - S. P. { *2 1/2 -6 1/2 -6 1/2 | *2 1/2 -6 1/2
**6 1/2 -6 1/2 -5 1/8 -6 1/2 -6 1/2, **6 1/2 -5 1/8 -6 1/2

CGW M&ST. L { *3 1/2 -6

CNW ALL OTHERS { *3 1/2 -6-6
**6-6-7 1/8 -6-6

NOTES:
* INDICATES RAIL END DRILLING.

** INDICATES BAR PUNCHING.

REF PREVIOUS U. P. STD DWGS PAGES 1003-1005.

112 LB. IS USED FOR MAINTENANCE ONLY

UNION PACIFIC RAILROAD
ENGINEERING STANDARDS

112 LB. AND 115 LB. RAIL SECTIONS

UNION PACIFIC

ADOPTED: MAY 26, 1988
REVISED: MARCH 1, 1998
FILE NO.: 0720

STD DWG
0720A

Copyright © 1997 by Union Pacific Railroad

STD DWG
0720A

CONFORMED

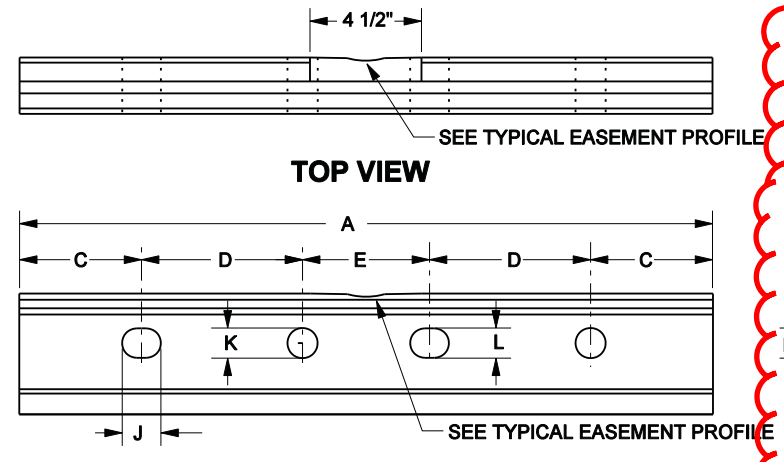

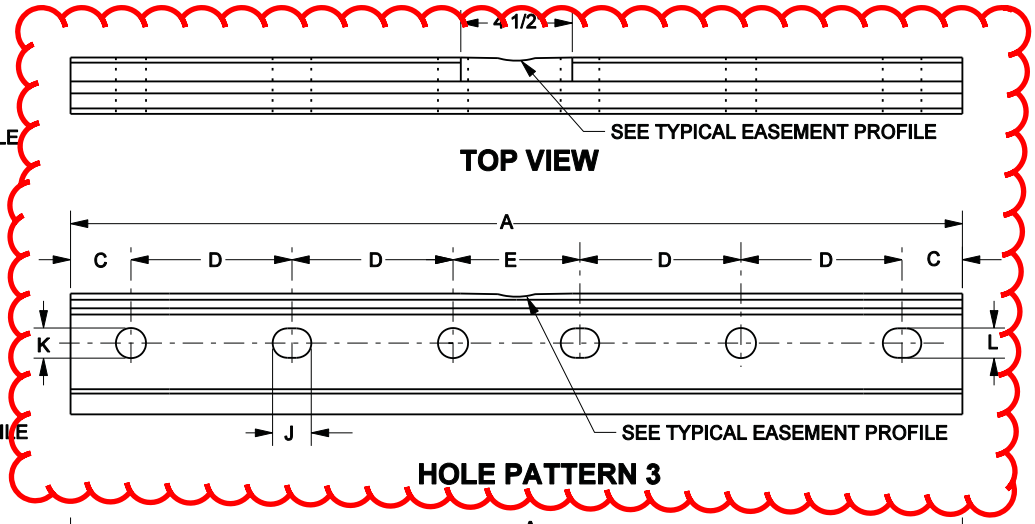

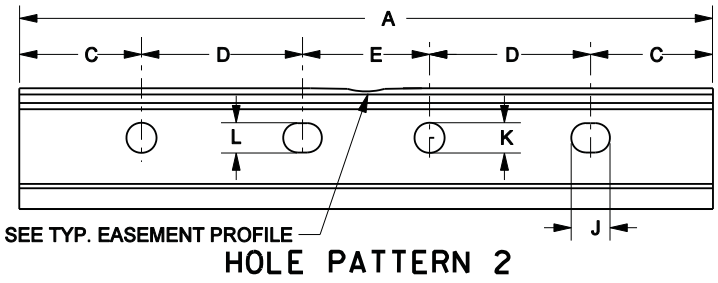

ELEVATION OF 24" AND 28" BAR

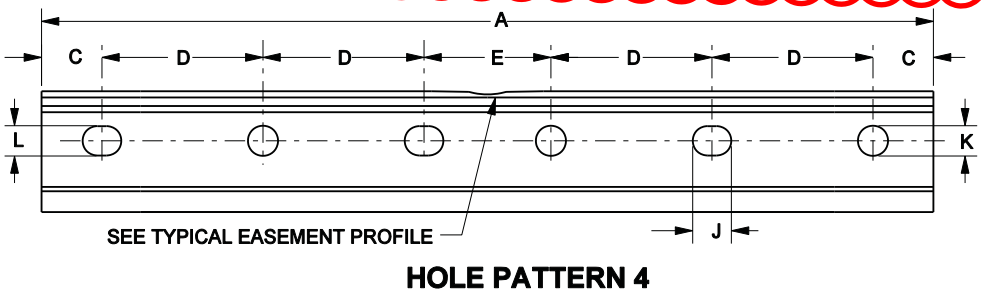

ELEVATION OF 36" BAR

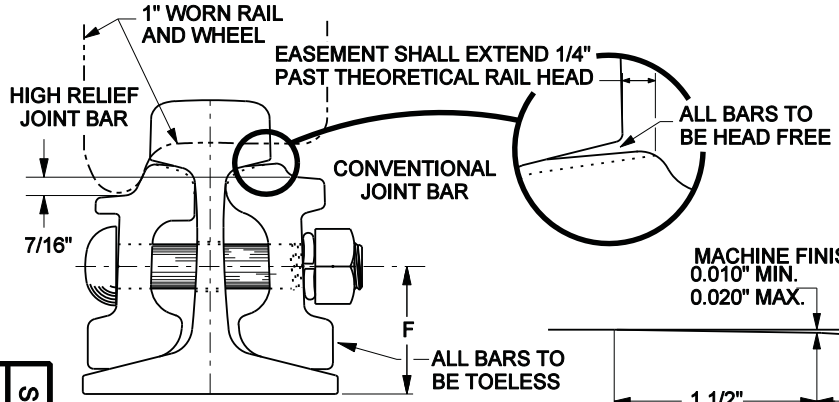

RAIL AND JOINT

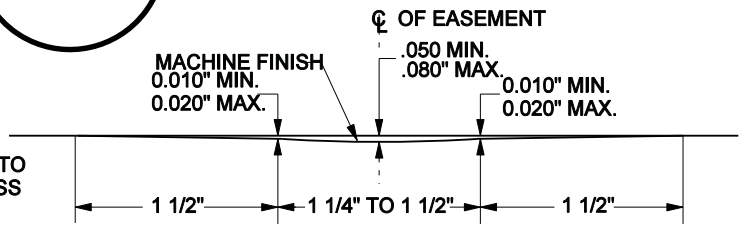

TYPICAL EASEMENT PROFILE

NOTE:
1. SEE PAGE 2 FOR THE REST OF THIS DWG.

UNION PACIFIC RAILROAD ENGINEERING STANDARDS

MISCELLANEOUS JOINT BARS

ADOPTED: MARCH 1, 1998
REVISED: MAY 18, 2005
FILE NO.: 0904F

STD DWG
0904F
PAGE 1 OF 2

STD DWG
0904F
PAGE 1 OF 2

Copyright © 2005 by Union Pacific Railroad

CONFORMED

STANDARD JOINT BAR	ITEM NO.	HOLE PATTERN	A	C	D	E	F	G	H	J	K	L
110 LB. 24" S.P. PUNCH	552-7300	2	24"	3 3/4"	5 1/2"	5 1/2"	2 5/8"	2 11/16"	1 1/4"	1 1/2"	1 5/32"	1 7/16"
112 LB. 24" U.P. PUNCH	552-7354	1	24"	2 15/16"	6 1/2"	5 1/8"	2 7/8"	2 1/2"	1 1/8"	1 9/16"	1 3/16"	1 3/16"
112 LB. 36" U.P. PUNCH	552-7385	4	36"	3"	6 1/2"	6"	2 7/8"	2 15/16"	1 1/8"	1 9/16"	1 1/8"	1 1/8"
113 LB. 28" S.P. PUNCH	552-7400	2	28"	4 15/16"	6 1/2"	5 1/8"	2 7/8"	2 1/2"	1 1/4"	1 9/16"	1 7/32"	1 3/16"
115 LB. 24" DRGW PUNCH	552-7408	1	24"	3"	6"	6"	2 7/8"	2 15/16"	1 1/8"	1 9/16"	1 3/16"	1 3/16"
115 LB. 28" S.P. PUNCH	552-7430	2	28"	4 15/16"	6 1/2"	5 1/8"	2 7/8"	2 1/2"	1 1/4"	1 9/16"	1 7/32"	1 3/16"
115, 119 LB. 36" U.P. PUNCH	552-7447	3	36"	2 7/16"	6"	7 1/8"	2 7/8"	3 1/2"	1 1/8"	1 13/32"	1 1/16"	1 1/16"
119 LB. 28" S.P. PUNCH	552-7500	2	28"	4 15/16"	6 1/2"	5 1/8"	2 7/8"	2 1/2"	1 1/4"	1 1/2"	1 7/32"	1 3/16"
119 LB. 36" DRGW PUNCH	552-7900	3	36"	3"	6"	6"	2 7/8"	2 15/16"	1 1/8"	1 9/16"	1 3/16"	1 9/16"
131 LB. 24" U.P. PUNCH	552-7570	1	24"	2 15/16"	6 1/2"	5 1/8"	3 3/32"	2 1/2"	1 1/8"	1 9/16"	1 3/16"	1 3/16"
131 LB. 36" U.P. PUNCH	552-7601	4	36"	2 15/16"	6 1/2"	6"	3 3/32"	2 15/16"	1 3/16"	1 1/2"	1 1/8"	1 1/8"
132 LB. 28" S.P. PUNCH	552-7615	2	28"	4 15/16"	6 1/2"	5 1/8"	3 3/32"	2 1/2"	1 5/16"	1 9/16"	1 7/32"	1 3/16"
132 LB. 36" U.P. PUNCH	552-7662	3	36"	2 7/16"	6"	7 1/8"	3 3/32"	3 1/2"	1 1/8"	1 13/32"	1 1/16"	1 13/32"
133 LB. 36" U.P. PUNCH	552-7693	4	36"	2 7/16"	6"	7 1/8"	3"	3 1/2"	1 1/8"	1 1/2"	1 1/8"	1 1/8"
136 LB. 36" U.P. PUNCH	552-7662	3	36"	2 7/16"	6"	7 1/8"	3 3/32"	3 1/2"	1 1/8"	1 13/32"	1 1/16"	1 1/16"
136 LB. 28" S.P. PUNCH	552-7700	2	28"	4 15/16"	6 1/2"	5 1/8"	3 3/32"	2 1/2"	1 3/16"	1 9/16"	1 7/32"	1 3/16"
136 LB. 36" S.P. PUNCH	552-9175	3	36"	2 7/16"	6 1/2"	5 1/8"	3 3/32"	2 1/2"	1 3/16"	1 9/16"	1 7/32"	1 3/16"
136 LB. 36" DRGW PUNCH	552-7631	4	36"	3"	6"	6"	3 3/32"	2 15/16"	1 1/8"	1 9/16"	1 3/16"	1 3/16"
132-141 LB. 36" UP PUNCH	552-7650	3	36"	2 7/16"	6"	7 1/8"	3 9/32"	3 1/2"	1 1/4"	1 1/2"	1 3/16"	1 3/16"

HIGH RELIEF JOINT BAR	ITEM NO.	HOLE PATTERN	A	C	D	E	F	G	H	J	K	L
115, 119 LB. 36" U.P. PUNCH	552-7479	3	36"	2 7/16"	6"	7 1/8"	2 7/8"	3 1/2"	1 1/8"	1 13/32"	1 1/16"	1 1/16"
133 LB. 36" U.P. PUNCH	552-7694	4	36"	2 7/16"	6"	7 1/8"	3"	3 1/2"	1 1/8"	1 1/2"	1 1/8"	1 1/8"
132-141 LB. 36" UP PUNCH	552-7680	3	36"	2 7/16"	6"	7 1/8"	3 9/32"	3 1/2"	1 1/4"	1 1/2"	1 3/16"	1 3/16"

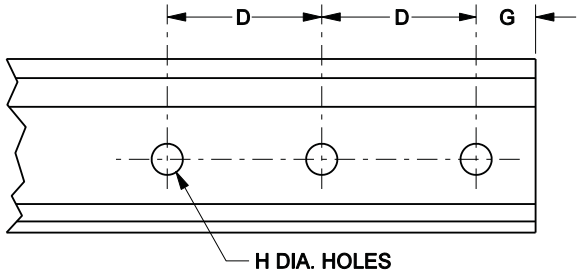

RAIL DRILLING

NOTES:
1. STAGGERED JOINTS: RAIL MUST BE LAID WITH STAGGERED JOINTS IN MAIN TRACKS, EXCEPT WHERE BALANCING THE JOINTS FOR SWITCH LEADS, ROAD CROSSINGS, BRIDGE ENDS,AND SIGNAL CIRCUITS, AND IN SECONDARY TRACKS EXCEPT WHERE USE OF PREFABRICATED TRACK PANELS IS AUTHORIZED.
2. RAIL JOINT LOCATION: WHEN LAYING RAIL, JOINTS MUST NOT BE LOCATED IN ROAD CROSSINGS, BRIDGE DECKS, OR ON THE ENDS OF BRIDGES.
3. FOR RAIL DETAILS, SEE STD DWGS. (700 SERIES) FOR HARDWARE, SEE STD DWG 0950. SEE PAGE 1 FOR THE REST OF THIS DWG.

UNION PACIFIC RAILROAD ENGINEERING STANDARDS

MISCELLANEOUS JOINT BARS

ADOPTED: MARCH 1, 1998
REVISED: MAY 18, 2005
FILE NO.: 0904F

STD DWG 0904F PAGE 2 OF 2

STD DWG 0904F PAGE 2 OF 2

Copyright © 2005 by Union Pacific Railroad

CONFORMED

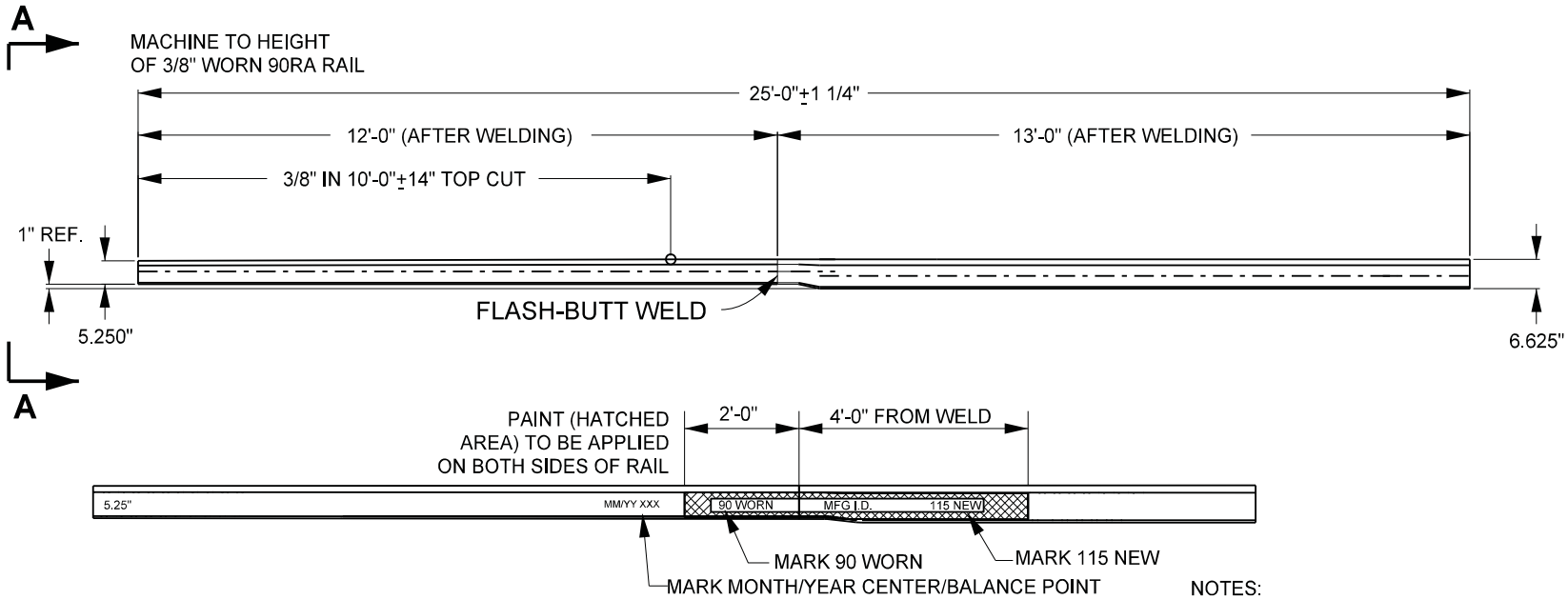

PAINT DETAIL

WHITE STENCIL, 2" BLOCK LETTERING
BOTH SIDES, LOCATION AS SHOWN.

NOTES:

1. PAINT WEB OF RAIL AS SHOWN IN PAINT DETAIL, SOLID WHITE ON BOTH SIDES. USING 2" BLOCK STENCIL AND BLACK PAINT, MARK THE APPROPRIATE RAIL TRANSITIONS, AT EACH END OF THE WHITE PAINTING. ADDITIONALY, ON ONE SIDE ONLY, PERMANENTLY AFFIX MANUFACTURERS I.D. TAG SHOWING APPROPRIATE DATA, INCLUDING MONTH AND YEAR IN PAINTED AREA.

2. AFTER FLASH BUTT WELD, 36" STRAIGHT EDGE CENTERED ON WELD MUST:
   a) ALONG TOP OF RAIL HAVE NO DIP AND NO CROWN GREATER THAN 0.060".
   b) ALONG BASE OF RAIL HAVE NO HORIZONTAL BOW GREATER THAN 0.060".

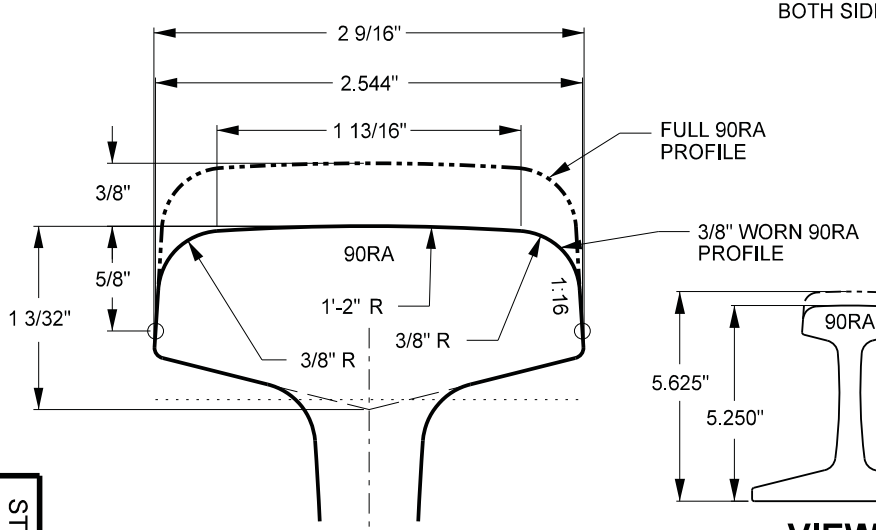

TOP RADII DETAIL

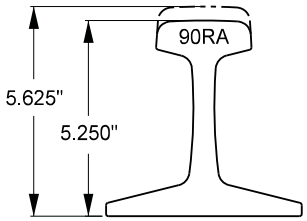

VIEW A

3/8" DEEP HEAD CUT
TO SIMULATE 3/8" WEAR

DESCRIPTION	ITEM NO.
LH RAIL	552-2219
RH RAIL	552-2220

UNION PACIFIC RAILROAD ENGINEERING STANDARDS

COMPROMISE TRANSITION RAIL 115 LB. TO 90 LB. WORN

UNION PACIFIC

APPROVED: VP ENGINEERING
ADOPTED: JULY 16, 2012
REVISED:
FILE NO.: 0942

STD DWG
0942

STD DWG
0942

CONFORMED

Copyright © 2012 by Union Pacific Railroad

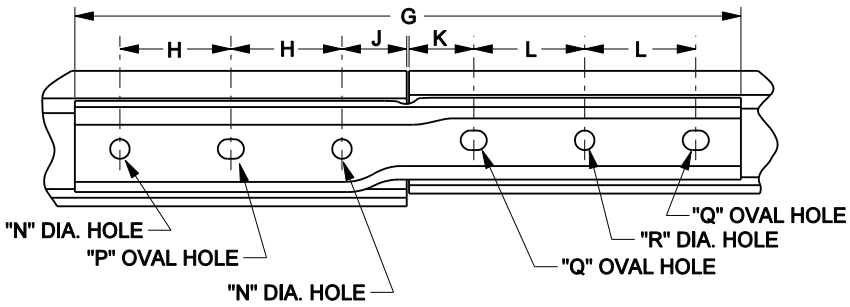

6-HOLE OUT BAR DETAIL

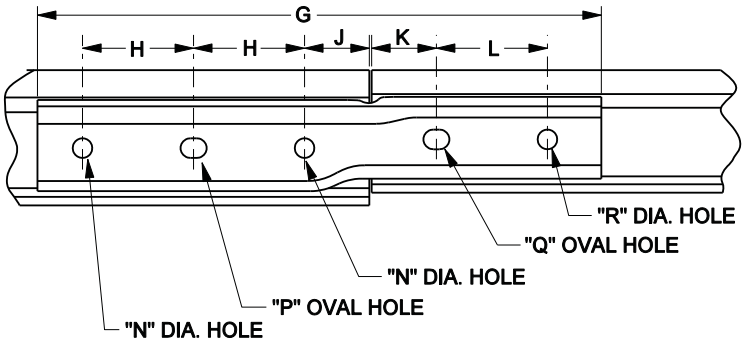

5-HOLE OUT BAR DETAIL

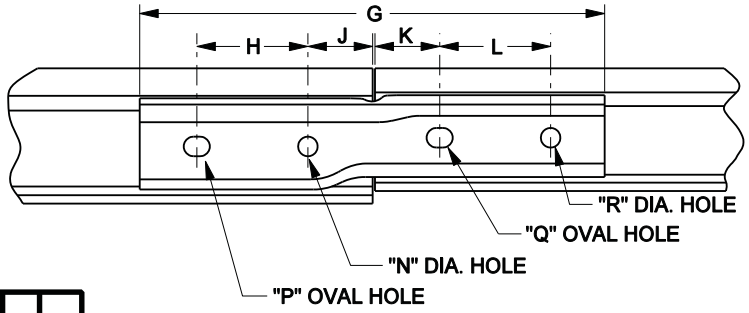

4-HOLE OUT BAR DETAIL

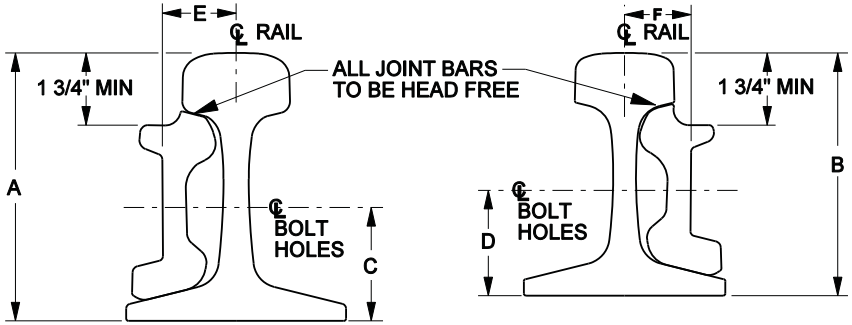

LARGER RAIL

SMALLER RAIL

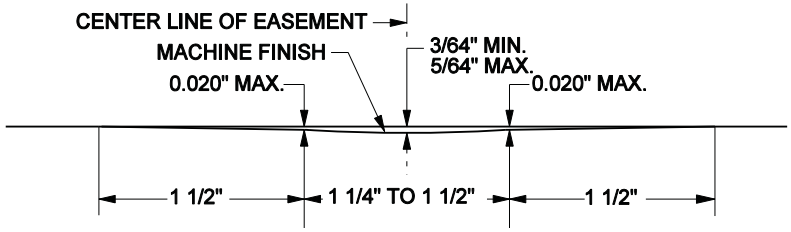

TYPICAL EASEMENT PROFILE

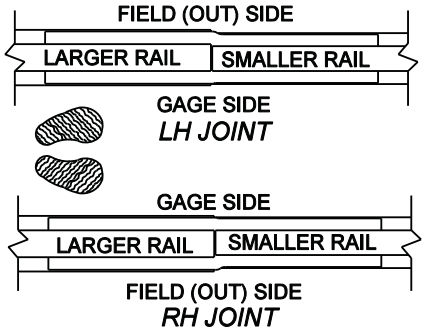

HANDED JOINTS

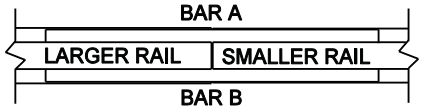

NON-HANDED JOINTS

NOTES:

1. AT PERMANENT CONNECTIONS OF DIFFERENT RAIL SECTIONS, COMPROMISE JOINTS OR COMPROMISE WELDS SHALL BE INSTALLED IN ACCORDANCE WITH CHIEF ENGINEER'S INSTRUCTIONS AND WHERE PRACTICABLE, THEY SHALL NOT BE LOCATED IN MAIN TRACK CURVE OR OPEN DECK BRIDGES, OR IN TURNOUTS.
2. STD DRAWINGS SHOULD BE REFERENCED FOR MANUFACTURING PURPOSE AND TO IDENTIFY THE ROUND AND OVAL HOLE PATTERNS.
3. SEE PAGE 2 FOR DIMENSION CHART & DETAILS FOR TRACK BOLTS, SEE STD DWG 0950

UNION PACIFIC RAILROAD ENGINEERING STANDARDS

COMPROMISE JOINTS

ADOPTED: DEC. 31, 1996
REVISED: JUNE 9, 2004
FILE NO.: 0948B

STD DWG
0948B
PAGE 1 OF 2

STD DWG
0948B
PAGE 1 OF 2

CONFORMED

Copyright © 2004 by Union Pacific Railroad

RAIL TO RAIL	RH ITEM	LH ITEM	BAR TYPE	A (NEW)	A (WORN)	B (NEW)	B (WORN)	C	D	E	F	G	H	J	K	L	N	P	Q	R	C.E. DWG NO.
136RE - 133RE	552-4370		6 HOLE	7 5/16"	—	7 1/16"	—	3 3/32"	3"	2"	2"	38"	6"	3 1/2"	3 1/2"	6"	1 1/8"	1 1/8" x 1 1/2"	1 1/8" x 1 1/2"	1 1/8"	83859
136RE - 132RE	552-4309		6 HOLE	7 1/4"	—	7"	—	3 3/32"	3 3/32"	1 31/32"	1 31/32"	36"	6"	3 1/2"	3 1/2"	6"	1 1/16"	1 1/16" x 1 13/32"	1 1/16" x 1 13/32"	1 1/16"	84017
136RE - 119RE	552-4186	552-4155	6 HOLE	7 5/16"	—	6 13/16"	—	3 3/32"	2 7/8"	1 31/32"	1 13/16"	36"	6"	3 1/2"	3 1/2"	6"	1 1/16"	1 1/16" x 1 13/32"	1 1/16" x 1 13/32"	1 1/16"	83829
SP136RE-119RE	552-9365	552-9225	6 HOLE	7 5/16"	—	6 13/16"	—	3 3/32"	2 7/8"	2"	2"	36"	6 1/2"	2 1/2"	2 1/2"	6 1/2"	1 7/32"	1 7/32" x 1 9/16"	1 7/32" x 1 9/16"	1 7/32"	—
D&RGW136RE-119RE	552-4187	552-4188	6 HOLE	7 5/16"	—	6 13/16"	—	3 3/32"	2 7/8"	2"	2"	36"	6"	2 15/16"	2 15/16"	6"	1 3/16"	1 3/16" x 1 9/16"	1 3/16" x 1 9/16"	1 3/16"	—
136RE - 115RE	552-4124	552-4093	6 HOLE	7 5/16"	—	6 5/8"	—	3 3/32"	2 7/8"	1 31/32"	1 13/16"	36"	6"	3 1/2"	3 1/2"	6"	1 1/16"	1 1/16" x 1 13/32"	1 1/16" x 1 13/32"	1 1/16"	83729
136RE - 112RE	552-4063	552-4032	6 HOLE	7 5/16"	—	6 17/32"	6 11/32"	3 3/32"	2 7/8"	2"	2"	36"	6"	3 1/2"	2 1/2"	6 1/2"	1 1/8"	1 1/8" x 1 1/2"	1 1/8" x 1 1/2"	1 1/8"	83862
SP136RE-SP110RE	552-9385	552-9285	4 HOLE	7 5/16"	—	6 1/4"	6 1/16"	3 3/32"	2 5/8"	2"	1 13/16"	26"	6 1/2"	2 1/2"	2 11/16"	5 1/2"	1 7/32"	1 7/32" x 1 9/16"	1 5/32" x 1 3/8"	1 5/32"	—
SP136RE-SP90ARA	552-9375	552-9280	4 HOLE	7 5/16"	—	5 5/8"	5 3/8"	3 3/32"	2 19/32"	2"	1 23/32"	26"	6 1/2"	2 1/2"	2 11/16"	5 1/2"	1 7/32"	1 7/32" x 1 9/16"	1 1/32" x 1 1/4"	1 1/32"	—
133RE - 132RE	552-3939		6 HOLE	7 1/16"	—	7 1/8"	—	3"	3 3/32"	2"	2"	38"	6"	3 1/2"	3 1/2"	6"	1 1/8"	1 1/8" x 1 1/2"	1 1/8" x 1 1/2"	1 1/8"	83905
133RE - 131RE	552-3909		6 HOLE	7 1/16"	—	7 1/8"	—	3"	3 3/32"	2"	2"	38"	6"	3 1/2"	2 15/16"	6 1/2"	1 1/8"	1 1/8" x 1 1/2"	1 1/8" x 1 1/2"	1 1/8"	83885
133RE - 119RE	552-3878	552-3847	6 HOLE	7 1/16"	—	6 13/16"	—	3"	2 7/8"	2"	1 13/16"	36"	6"	3 1/2"	3 1/2"	6"	1 1/8"	1 1/8" x 1 1/2"	1 1/16" x 1 13/32"	1 1/16"	83726
133RE - 115RE	552-3816	552-3786	6 HOLE	7 1/16"	—	6 5/8"	—	3"	2 7/8"	2"	1 13/16"	36"	6"	3 1/2"	3 1/2"	6"	1 1/8"	1 1/8" x 1 1/2"	1 1/16" x 1 13/32"	1 1/16"	83721
133RE - 112RE	552-3693	552-3663	6 HOLE	7 1/16"	—	6 17/32"	6 11/32"	3"	2 7/8"	2"	2"	36"	6"	3 1/2"	2 1/2"	6 1/2"	1 1/8"	1 1/8" x 1 1/2"	1 1/8" x 1 1/12"	1 1/8"	83863
133RE - 110RE	552-3632	552-3601	6 HOLE	7 1/16"	—	6 1/4"	—	3"	2 5/8"	2"	2"	36"	6"	3 1/2"	2 11/16"	5 1/2"	1 1/8"	1 1/8" x 1 1/2"	1 1/8" x 1 1/2"	1 1/8"	83824
133RE - 100RE	552-3570	552-3539	5 HOLE	7 1/16"	—	6"	—	3"	2 1/2"	2"	1 13/16"	30"	6"	3 1/2"	2 5/8"	5 1/2"	1 1/8"	1 1/8" x 1 1/2"	1 1/8" x 1 13/32"	1 1/8"	83787
133RE - 90RA	552-3509	552-3478	5 HOLE	7 1/16"	—	5 17/32"	5 11/32"	3"	2 19/32"	2"	1 23/32"	30"	6"	3 1/2"	2 5/8"	5 1/2"	1 1/8"	1 1/8" x 1/12"	1" x 1 1/4"	1"	83849
132RE - 119RE	552-3447	552-3416	6 HOLE	7 1/8"	—	6 3/4"	6 11/16"	3 3/32"	2 7/8"	2"	2"	36"	6"	3 1/2"	3 1/2"	6"	1 1/16"	1 1/16" x 1 13/32"	1 1/16" x 1 13/32"	1 1/16"	83884
132RE - 115RE	552-3386	552-3355	6 HOLE	7 1/8"	—	6 5/8"	—	3 3/32"	2 7/8"	2"	1 13/16"	36"	6"	3 1/2"	3 1/2"	6"	1 1/16"	1 1/16" x 1 13/32"	1 1/16"x 1 13/32"	1 1/16"	83850
119RE - 115RE	552-2678		6 HOLE	6 11/16"	6 9/16"	6 1/2"	6 3/8"	2 7/8"	2 7/8"	2"	1 7/8"	36"	6"	3 1/2"	3 1/2"	6"	1 1/16"	1 1/16" x 1 13/32"	1 1/16" x 1 13/32"	1 1/16"	83918
115RE - 112RE	552-2401		5 HOLE	6 5/8"	—	6 17/32"	6 11/32"	2 7/8"	2 7/8"	1 7/8"	1 7/8"	30"	6"	3 1/2"	2 1/2"	6 1/2"	1 1/16"	1 1/16" x 1 13/32"	1 1/16" x 1 13/32"	1 1/16"	83864
115RE - 100RE	552-2271	552-2267	5 HOLE	6 5/8"	6 1/2"	6"	5 13/16"	2 7/8"	2 3/4"	1 13/16"	1 13/16"	30"	6"	3 1/2"	2 1/2"	6 1/2"	1 1/16"	1 1/16" x 1 13/32"	1 1/16" x 1 13/32"	1 1/16"	84015
115RE - 110RE	552-2370	552-2339	5 HOLE	6 5/8"	—	6 1/8"	6"	2 7/8"	2 5/8"	1 13/16"	1 13/16"	30"	6"	3 1/2"	2 29/32"	6"	1 1/16"	1 1/16" x 1 13/32"	1 1/16" x 1 7/16"	1 1/16"	83722
115RE - 100RE	552-2309	552-2278	4 HOLE	6 5/8"	—	6"	—	2 7/8"	2 39/64"	2"	2"	26"	6 1/2"	2 1/2"	2 11/16"	5 1/2"	1 5/32"	1 1/8" x 1 3/8"	1 1/8" x 1 3/8"	1 5/32"	83881
112RE - 100RE	552-1867	552-1857	4 HOLE	6 5/8"	6 5/16"	5 15/64"	5 23/64"	2 7/8"	2 5/8"	1 13/16"	1 13/16"	24"	6 1/2"	2 1/2"	2 21/32"	6"	1 1/16"	1 1/16" x 1 13/32"	1 1/16" x 1 13/32"	1 1/16"	84003
115RE - 90RA	552-2247	552-2216	5 HOLE	6 5/8"	—	5 9/16"	5 7/16"	2 7/8"	2 37/64"	1 13/16"	1 9/16"	30"	6"	3 1/2"	2 29/32"	6"	1 1/16"	1 1/16" x 1 13/32"	1 1/16" x 1 7/16"	1 1/16"	83723
115RE - 85MR	552-2106	552-2155	5 HOLE	6 5/8"	—	5 7/32"	—	2 7/8"	2 21/128"	1 13/16"	1 3/4"	30"	6"	3 1/2"	2 13/32"	5"	1 1/16"	1 1/16" x 1 13/32"	1 1/16" x 1 7/16"	1 1/16"	83724

NOTES:
1. SEE PAGE 1 FOR NOTES AND DETAILS.

UNION PACIFIC RAILROAD ENGINEERING STANDARDS

COMPROMISE JOINTS

ADOPTED: DEC. 31, 1996
REVISED: JUNE 9, 2004
FILE NO.: 0948B

STD DWG
0948B
PAGE 2 OF 2

STD DWG
0948B
PAGE 2 OF 2

Copyright © 2004 by Union Pacific Railroad

CONFORMED

BOLT SIZE	RAIL SIZE	HEAD DEPTH A	SHOULDER DEPTH B	LENGTH UNDER HEAD C	THREAD LENGTH D	NOMINAL DIE OVER THREAD E	SHANK DIA F	HEAD DIMENSIONS G	HEAD DIMENSIONS H	SHOULDER HEIGHT J	HEAD DIAMETER K	NUT WIDTH L	THREADS PER INCH	ITEM NUMBER
1 1/8 X 6 1/2"	SP & DRGW 112-136 UP 136 & 141	45/64"	5/8"	6 1/2"	2 1/2"	1 1/8"	1 1/16"	43/64"	1 55/64"	1 17/32"	1 57/64"	1 11/16"	A.N.C. 7 THREAD	550-9035
1 1/16 X 6"	UP 112, 131 & 133	5/8"	9/16"	6"	2 3/8"	1 1/16"	1"	19/32"	1 5/8"	1 3/8"	1 11/16"	1 5/8"	A.N.C. 8 THREAD	550-6344
1 1/16" X 5 1/2"	UP 110	5/8"	9/16"	5 1/2"	2 3/8"	1 1/16"	1"	19/32"	1 5/8"	1 3/8"	1 11/16"	1 5/8"	A.N.C. 8 THREAD	550-6226
1" X 6"	136,132,119, 115,CNW 112	5/8"	9/16"	6"	2 1/4"	1"	15/16"	19/32"	1 5/8"	1 3/8"	1 11/16"	1 5/8"	A.N.C. 8 THREAD	550-5873
1" X 5 1/2"	CNW 110 SSW 115	5/8"	9/16"	5 1/2"	2 1/4"	1"	15/16"	19/32"	1 5/8"	1 3/8"	1 11/16"	1 5/8"	A.N.C. 8 THREAD	550-5756
15/16" X 4 5/8"	UP 90	35/64"	1/2"	4 5/8"	2 1/8"	15/16"	7/8"	33/64"	1 25/64"	1 7/32"	1 31/64"	1 1/2"	9 THREADS	550-5404
7/8" X 5"	UP CNW 90	35/64"	1/2"	5"	2"	7/8"	13/16"	33/64"	1 25/64"	1 7/32"	1 31/64"	1 7/16"	9 THREADS	550-5050

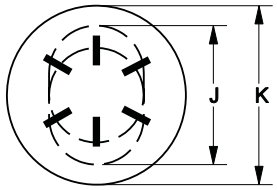

BOLT HEAD

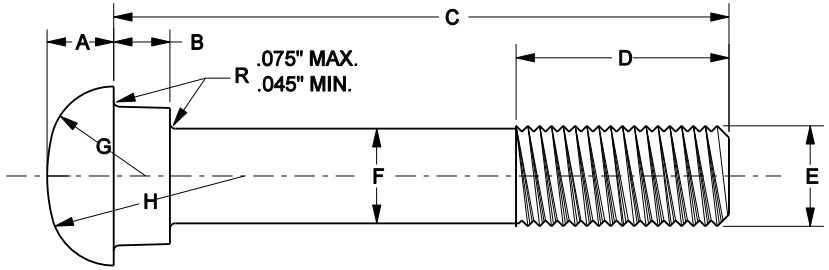

BOLT

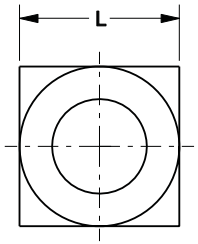

SQUARE NUT

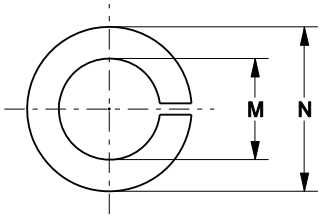

SPLIT WASHER

ITEM NO.	NOMINAL WASHER SIZE	INSIDE DIAMETER M	OUTSIDE DIAMETER N
550-7060	7/8"	.905"	1.576"
550-7177	15/16"	.970"	1.688"
550-7295	1"	1.042"	1.799"
550-7413	1 1/16"	1.107"	1.910"
550-7648	1 1/8"	1.188"	2.218"

NOTES:
1. ITEM NUMBERS IN BOLT CHART ARE TO INCLUDE APPROPRIATE BOLT, WASHER AND NUT.
2. TRACK BOLTS TO CONFORM TO SAE J429 GRADE 8 SPECIFICATIONS.
3. NUTS TO HAVE 2H PHYSICAL REQUIREMENTS.
4. TENSILE STRENGTH:
   150,000 PSI
   YIELD STRENGTH:
   130,000 PSI
   ELONGATION 12% MIN.
   REDUCTION OF AREA 35% MIN.
   PROOF LOAD 120,000 PSI
   ALL THREADS TO BE FREE FIT.

UNION PACIFIC RAILROAD ENGINEERING STANDARDS

TRACK BOLT

UNION PACIFIC

ADOPTED: FEB. 6, 1997
REVISED: OCT. 10, 2005
FILE NO.: 0950H

STD DWG
0950H

STD DWG 0950H

Copyright © 2005 by Union Pacific Railroad

CONFORMED

BNSF ITEM NUMBERS		
ITEM NO.	WT	SPIKES/KG
527570005	200	241
527570014	-	BULK

CSX ITEM NUMBERS		
ITEM NO.	WT	SPIKES/KG
013.8250325.1	100	120
013.8250327.1	-	BULK

CN ITEM NUMBERS		
ITEM NO.	WT	SPIKES/KG
01-03-303	200	241

NS ITEM NUMBERS		
ITEM NO.	WT	SPIKES/KG
640-903705	200	241

CP ITEM NUMBERS		
ITEM NO.	WT	SPIKES/KG
002840231	50	62
002840256	-	BULK

UPRR ITEM NUMBERS		
ITEM NO.	WT	SPIKES/KG
550-6707	150	180
550-6710	-	BULK

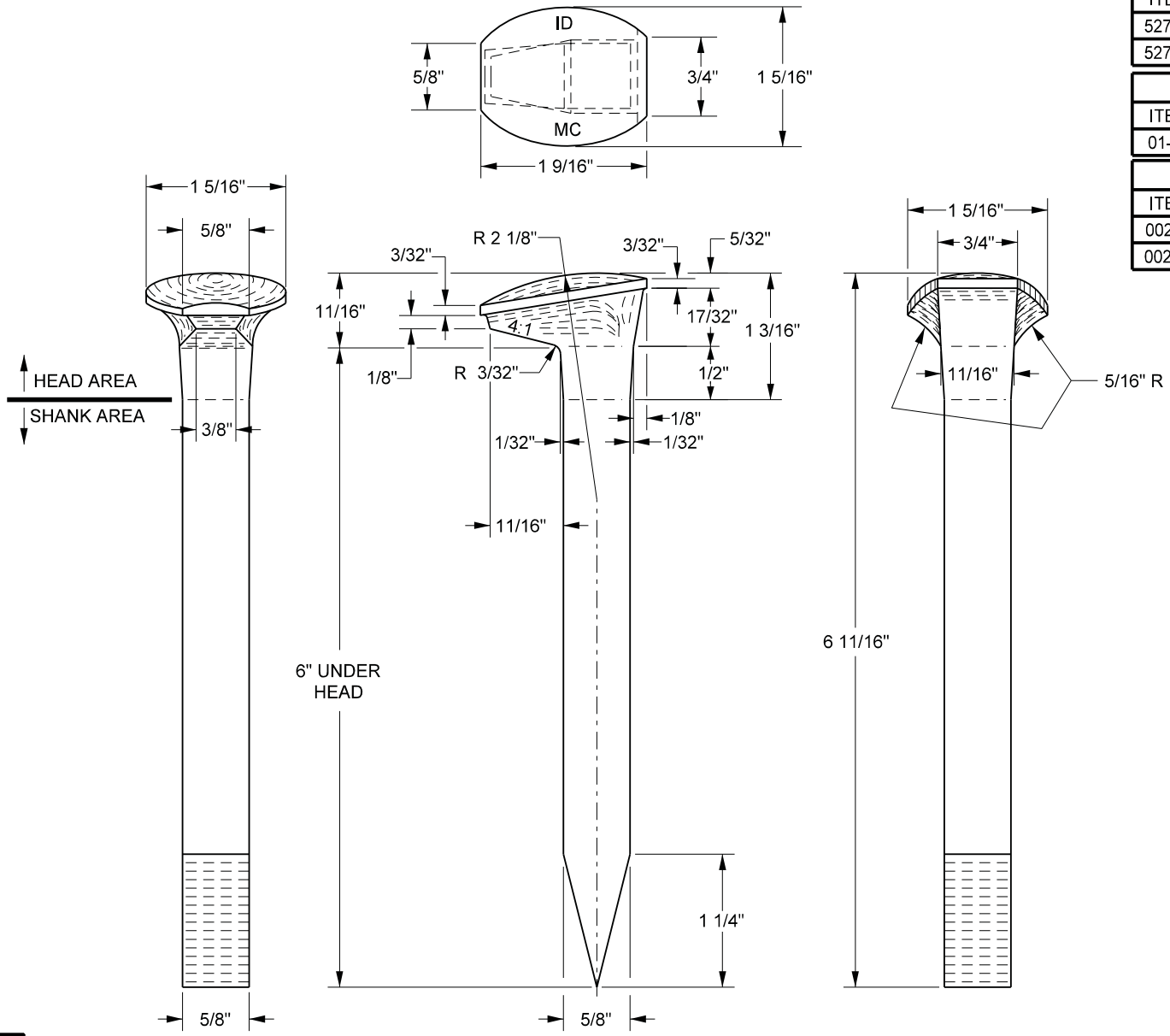

NOTES:

1. MATERIAL AND WORKMANSHIP TO BE IN ACCORDANCE WITH CURRENT AREMA MANUAL REQUIREMENTS FOR MEDIUM CARBON SPIKES.
2. PERMISSIBLE SHANK STRAIGHTNESS VARIATION, MEASURED IN EITHER PLANE, SHALL NOT EXCEED 0.0313".
3. MANUFACTURER'S I.D. AND THE LETTERS "MC" SHALL BE PRESSED ON THE HEAD OF EACH SPIKE WHILE BEING FORMED.
4. WEIGHT = APPROXIMATELY 0.83 LBS. EACH.

BNSF RAILWAY CN CSX NS NORFOLK SOUTHERN UNION PACIFIC

COMMON STANDARDS

6" TRACK SPIKE

6" CUT TRACK SPIKE

FILE OWNER: UPRR	DATE: JULY 16, 2012
REV. NO.: 3	DWG NO: 130005

130005

CONFORMED

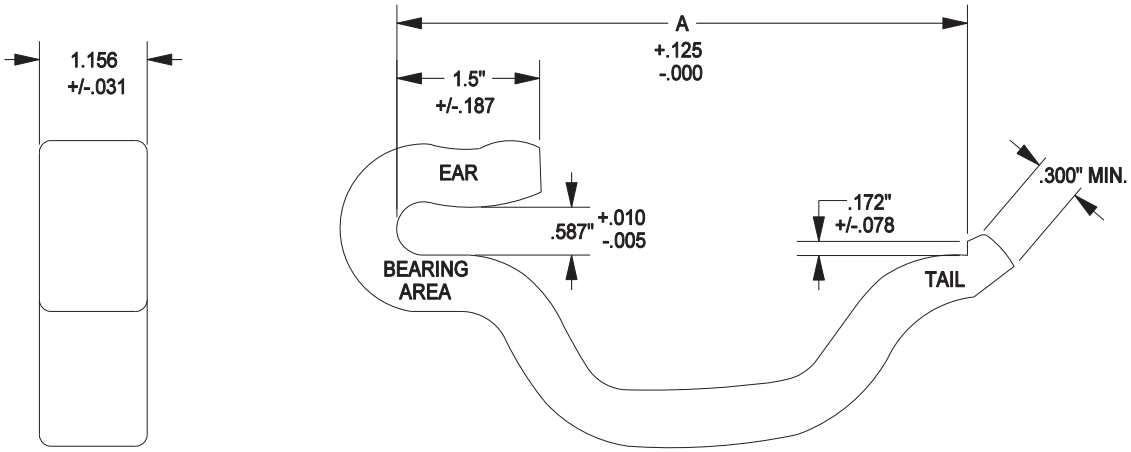

NOTES:
1. MATERIAL: HIGH CARBON STEEL

2. HEAT TREAT TO Rc 34-47
   TARGET RANGE Rc 39-44

3. ALL DIMENSIONS ARE MINIMUM UNLESS OTHERWISE SPECIFIED.

4. TYPICAL CHEMISTRY: CARBON .58-.90, MANGANESE .7-1.1, SILICON .5 MAX

RAIL BASE SIZE	A	BNSF ITEM NO.	CN ITEM NO.	CSX ITEM NO.	UPRR ITEM NO.	WEIGHTS
5 1/2"	5.625"	520130009	01-30-207	013.0161200.1	550-1630	1.96 LBS.
6"	6.125"	520130012	01-30-208	013.0160000.1	550-1650	2.094 LBS.

BNSF RAILWAY

CN CSX UNION PACIFIC

BAR STOCK ANCHOR FOR 5 1/2" AND 6" BASE RAIL

FILE OWNER: UPRR | DATE: JUNE 1, 2005

REV. NO.: 1 | DWG NO: 135010

135010

CONFORMED

Appendix G

Historical Geotechnical Borings

CONFORMED

Project 3151 -
L.I.D #4 - Area
SoF City Hall
between railroad
track + 680

13

CONFORMED

RECEIVED
MAR 13 1972

March 7, 1972
Job No. 23-238-70

Project 3151

	Dist.	Init.
1.		
2.		
3.		
4.		
File		
X-File		

3151

SOILS INVESTIGATION

MILPITAS L.I.D. 71-4
MILPITAS, CALIFORNIA

FOR

BISSELL AND KARN

JOB NO. 23-238-70 MARCH 7, 1972

62-79 on Index Map

CONFORMED

GEOLABS-CALIFORNIA, INC.

March 7, 1972
Job No. 23-238-70

SOILS INVESTIGATION

Milpitas L.I.D. 71-4
Milpitas, California

For

BISSELL AND KARN

INTRODUCTION

This report presents the results of our soils investigation performed for the subject project. Included in the investigation were foundation design criteria for the two bridges, and R-Value for pavement design on the streets to be constructed. The purpose of this investigation was to determine the nature of the soils underlying the site, to ascertain their engineering properties and to provide design and construction recommendations.

The scope of work performed for this investigation included:

1. Foundation investigations for the proposed crossings of Ames Avenue and Yosemite Drive at Berryessa Channel in Milpitas, California. The scope of work for these foundation investigations is as follows:

   A. Drilling, logging and sampling 4 exploratory borings to depths of 80 to 85 feet.

   B. Performing index and engineering properties tests on representative soil samples.

   C. Engineering analyses to develop foundation design criteria.

2. R-Value sampling and testing of a part of 16 exploratory test pits along the proposed city streets included in this project.

The location of the exploratory borings and the test pits are shown on Plate 1. The Boring Logs are presented on Plates 3 through 6, and the laboratory test data are presented on Plates 7 through 18.

CONFORMED

PLANNED CONSTRUCTION

The proposed project consists of the design and construction of bridge crossings of Berryessa Channel at Ames Avenue and Yosemite Drive and the design and construction of:

1. Wrigley Drive between Calaveras Road and Landess Avenue.

2. The extension of Ames Avenue westerly to Wrigley Drive.

3. The extension of Yosemite Drive westerly to Wrigley Drive.

4. The extension of A Street westerly and southerly to Yosemite Drive.

STRUCTURAL CONSIDERATIONS

The two bridges will cross Berryessa Channel, one at Ames Avenue and the other at Yosemite Drive. Information concerning the future improvements of the channel was furnished by Mr. Ed Ferguson of the Santa Clara County Flood Control and Water District. The channel will, at some time in the future, be widened to 44 feet bottom width with 2 to 1 side slopes. At the present time, lining the channel is not planned.

Information concerning the bridges and street criteria was supplied by Mr. Bob Crossett of Bissell and Karn, Inc. The bridges are to be of reinforced concrete construction, both bridges being 2 span design at 32 feet per span. For the Yosemite Drive bridge, the design loads are approximately as follows:

1. 530 kips for each abutment.

2. 1155 kips for the center pier.

The design structural loads are as follows for the Ames Avenue bridge:

1. 387 kips for each abutment.

2. 843 kips for the center pier.

CONFORMED

SITE CONDITIONS

The subject site is located between Calaveras Boulevard and Landess Avenue, and between Dempsey Railroad tracks and Freeway 680, north-south and west-east, repsectively, as shown on Plate 1. The surface of the site is relatively flat with total relief of approximately 40 feet. Most of the surface of the subject site has been disked to a depth of 1 to 1½ feet. Berryessa Channel runs north-south through the subject site and varies from 20 to 30 feet in width and 10 to 12 feet in depth.

The subject site is located immediately southeast of the intersection of Calaveras Road and the Western Pacific Railroad tracks in Milpitas, California. It is bounded by the Calaveras Road to the north, Dempsey Road to the east, Landess Avenue to the south and the Western Pacific Railroad tracks to the west. The surface of the site slopes gently downward to the northwest at approximately 3/4 percent with maximum relief across the site of 45 feet. The site is presently unimproved except for Berryessa Channel improvements.

FIELD EXPLORATION

The two bridge sites were explored on January 18, 19, and 20, 1972, by drilling 4 exploratory test borings with a truck-mounted drill rig. Borings 1, 2, and 3 were 80 feet in depth and Boring 4 was drilled to a depth of 85 feet. The boring locations are shown on Plate 1. Borings 1 and 3 were drilled on the west and east sides of Berryessa Channel, respectively, along the future alignment for Yosemite Drive. Borings 2 and 4 were located as close as possible to the proposed location of the bridge across Berryessa Channel at Ames Avenue, on the west and east sides of the channel, respectively. All borings were drilled using rotary wash techniques (drillers mud). Two and one-half inch I.D. ring samples were taken at selected depths with a Geolabs ring sampler driven by a 300 pound weight (slip jars) falling 18 inches. The subsurface profiles encountered were continuously logged by our field engineer and classified by visual examination in accordance with the Unified Soil Classification System. Portions of each sample were placed in moisture-proof containers and transported to our laboratory for further evaluation and testing.

CONFORMED

On January 21, 1972, our field representative excavated a total of 16 backhoe exploratory test pits along the proposed future street alignments on the subject site. The test pits varied in depths from 3 to 5 feet and the locations are shown on Plate 1. The subsurface soil profile encountered was logged by our field representative, and the exploratory test pit descriptions are found in Appendix A. Representative bulk soil samples were obtained for further evaluation and laboratory testing. Ten bulk samples were selected for R-Value testing, and the results are also found in Appendix A.

LABORATORY TESTS

Classification

The field classification of the exploratory test borings was verified in the laboratory, also in accordance with the Unified Soil Classification System.

Natural Moisture Content and Dry Density

Natural water content and dry density determinations were performed on most of the ring samples. In determining the natural dry density, the ends of the specimens were trimmed to obtain a smooth square surface. After measuring the volume and wet weight, the specimens were placed in an oven to remove all moisture. The oven-dried samples were then weighed and the moisture content and dry density calculated. The dry unit weights and moisture contents determined are shown on the attached "Boring Logs".

Shear Tests

Shear tests were performed in the direct shear machine which is of the strain control type. The rate of deformation is approximately 0.05 inches per minute. A portion of the samples were sheared under varying confining loads in order to determine the shear strength at confining pressures corresponding to the design overburden pressure. Another portion of the samples were sheared under varied confining loads in order to determine the Coulomb shear strength parameters, cohesion and angle of internal friction. These samples were tested in an artificially saturated condition. Results of the direct shear tests are plotted on the attached Shear Test Diagrams, Plates 7 through 14.

CONFORMED

Consolidation Tests

Consolidation tests were performed on samples of the underlying soils to determine their settlement characteristics. Settlement predictions of the soil's behavior under load are made on the basis of the consolidation tests. The consolidation apparatus is designed to receive one of the one-inch high rings. Loads are applied in several increments in a geometric progression, and the resulting deformations are recorded at selected time intervals. Porous stones are placed in contact with the top and bottom of each specimen to permit addition and release of pore fluid. Results are plotted on the "Consolidation-Pressure Curve", Plates 15 and 16.

Atterberg Limits

Liquid and plastic limits of a selected sample were determined on that portion of soil passing the #40 sieve, in accordance with ASTM Test Designations D 423-66 and D 424-59. The results of the Atterberg Limits Tests are presented on Plate 17.

Sieve Analysis

Grain-size distribution was determined for a soil sample by performing sieve analysis in accordance with ASTM Test Designation D 422-63, the results are presented on Plate 18.

Hveem Stabilometer Test ("R"-Value)

To provide paving recommendations on the site, Hveem Stabilometer Tests (State of California Test Method No. California 301-F) were performed on bulk samples from locations on the site as shown on Plate 1 to determine the R-Value of the on-site soils. The results of the tests are presented on Plates 19 through 28.

SOIL CONDITIONS

Based upon our exploratory borings and test pits, we believe that the site is underlain by the following approximate subsurface soil profile:

1. On each side of Berryessa Channel there is a one to three foot thickness of fill for the unimproved roads which parallel the channel. This material is a clayey, sandy gravel, which is light brown in color and loose to medium dense in relative density.

CONFORMED

2. Site of Bridge for Yosemite Drive:

A. The surficial layer of clayey gravel was underlain by 15 to 17 feet of high plasticity clay. These clays were dark brown to grey in color and often contained tan and rust colored streaks. The material was damp to moist, is considered highly expansive, and was firm to stiff in consistency.

B. The above layer was underlain by 33 to 34 feet of low moderate plasticity clays, sandy clays and clayey sands as shown on the "Boring Logs". These materials were typically tan to light brown in color with occasional streaks, and were firm to very stiff in consistency, and loose to dense in relative density.

C. The succeeding layer of soil consisted of approximately 25 feet of high plasticity clays. These clays changed in color from brown with occasional tan streaks to bluish-green with depth and occasionally contained sand and/or gravel. These materials were very stiff to hard in consistency.

D. The above high plasticity clays were underlain by light brown to tan moderate plasticity sandy clays and clayey sands. These materials were hard in consistency and dense in relative density.

3. Site of Proposed Bridge for Ames Avenue:

A. The one to three foot thick surficial clayey gravel layer is underlain by 16 to 17 feet of high plasticity clay. These clays were commonly grey to brown in color and often contained tan and rust colored streaks. The material was damp to moist, is considered highly expansive, and was firm to stiff in consistency.

B. The layer of high plasticity clay was underlain by 35 to 36 feet of low to moderate plasticity clays, sandy clays, and clayey sands. These materials were light brown to tan in color, and were stiff to very stiff in consistency and dense in relative density.

CONFORMED

C. The above layer was underlain by approximately 28 feet of high plasticity clays which varied in color from brown to bluish-green with depth. These materials also occasionally contained coarse sand and fine gravel and were very stiff to hard in consistency.

D. The high plasticity clays overlay light brown clayey sands and gravels which were very dense in relative density.

Ground Water

Borings were not left open for a sufficient period of time to observe stabilized water levels. Based on the levels observed in three of the borings one day after drilling each one, it is our opinion that the natural ground water surface is at, or below, twenty feet below the existing ground surface. This could fluctuate during winter and summer seasons.

CONCLUSIONS AND RECOMMENDATIONS

General

It is our opinion that the proposed bridges may be constructed on this site provided that the project design and construction incorporates the recommendations presented herein and further provided that they are supported on a driven pile foundation deriving support as recommended herein.

Pile Foundation

Due to the heavy loads induced by the reinforced concrete bridges, piles are necessitated to support the structures. On the basis of our analyses, we estimate that Class 45-2 Piles, as per page B2-1 of State of California-Division of Highways Standard Plans (January 1971 Edition), will have a minimum factor of safety against bearing failure of 2.5 for design loads of 45 tons if provided in the following lengths and tip elevation:

	Abutments		Center Pier	
	Pile Cut Off Elevation-Ft.	Pile Tip Elevation-Ft.	Pile Cut Off Elevation-Ft.	Pile Tip Elevation-Ft.
Ames Avenue	43	-7	32	-13
Yosemite Drive	35	-15	24	-21

CONFORMED

The capacities indicated represent the vertical downward capacity of single vertical piles and should be reduced by 50 percent in calculating the uplift capacity. The design capacities are for dead plus real live loads only. The capacities may be increased by 1/3 when considering short duration wind and seismic loading. While pile groups are not anticipated, if they are selected, we recommend a minimum spacing of 3½ feet between pile centers and a reduction in capacity in accordance with the Converse-Labarre formula for efficiency of piles within a group.

We expect that piles designed in accordance with the foregoing will experience a small amount of settlement as a result of soil consolidation below the pile tips. It is our opinion that this settlement will be less than 1 inch.

The cost of cutting off precast concrete piles to the desired cut-off elevation is significant and can be avoided by installing all piles for each bridge at the desired tip elevation and of appropriate length so that when driven to the desired tip elevation, the top of the pile is at the cut-off elevation.

With regard to installation, we recommend that piles be driven in fixed leads with a hammer which develops not less than 15,000 foot-pounds of energy per blow and that all piles for a given section be driven to within two feet of the same tip elevation, but not less than the elevation shown above. All piles should be accurately located (plus or minus 3 inches) and driven within ¼ inch per foot of vertical. Except as specifically noted in this paragraph, the piles should be installed in accordance with Section 49 of the State of California-Division of Highways Standard Specification, January 1971 edition. We recommend that the entire driving operation be observed and recorded by one of our engineers to ensure proper installation of the piles.

Lateral Design

Resistance to lateral loading may be provided by passive earth pressure or the sides of piles. The passive earth pressure may be computed as an equivalent fluid having a desntiy of 600 pounds per cubic foot with a maximum passive earth pressure of 6000 pounds per square foot.

Pavement Design

Sixteen test pits were excavated and bulk samples obtained along the proposed extensions of Wrigley Drive, Ames Avenue, Yosemite Drive and A Street. Ten "R"-Value tests were performed on representative bulk soil samples in accordance with Test Method No. California 301-F, the results of which are presented in Plates 19 through 28. The bulk of the samples tested had "R"-Values between 19 and 35

CONFORMED

with an overall high of 66 and low of less than 5. We recommend that the pavement sections be designed using an "R"-Value of 20 subject to the provision that those limited areas with "R"-Values less than 20 be identified during construction and that the section in such areas be locally increased as appropriate for a design "R"-Value of 5.

Plan and Specification Review and Cosntruction Inspection

The complexity of this site is sufficient to warrant review of the plans and specifications by this office to ensure that the intent of the recommendations contained herein are fully incorporated in the design and construction of this project. We recommend that the pile installation operation be inspected and certified by this office.

Seismic Considerations

The San Francisco Bay Area is recognized by geologists and seismologists as one of the most active seismic regions in the United States. The significant earthquakes which occur in the Bay Area are associated with crustal movements along well defined active fault zones. The traces of the well known San Andreas Rift Zone is located 15 miles southwest of the project site and the Hayward Fault is approximately one-half mile to the northeast of the site. We therefore believe that the probability of ground rupture on this site should not be a design consideration.

On the basis of recent studies, it is reasonable to assume that the subject site will be subjected to ground shaking from at least one moderate to severe earthquake during the design life. We recommend that this be considered in the design of this project, although we do not believe that it is necessary to take unusual design measures as compared to similar developments in the Bay Area.

INVESTIGATION LIMITATIONS

Our investigation was based on a surface reconnaissance, the drilling of four exploratory borings, sixteen exploratory tests pits for "R"-Value testing, laboratory tests, and engineering studies. Materials encountered in the borings are believed to be representative of the total area; however, the soil may vary in character

CONFORMED

between borings. The conclusions and recommendations contained herein are professional opinions derived in accordance with current standards of professional practice and no warranty is expressed or implied.

Respectfully submitted,

GEOLABS-CALIFORNIA, INC.

Richard T. Gomm
Staff Engineer

Frank Berlogar
Manager, RCE 20383

RTG:FB:bb

Enclosures: Plate 1 - Site Plan
Plate 2 -
Plates 3 through 6 - Boring Logs
Plates 7 through 14 - Shear Test Diagrams
Plates 15 through 16 - Consolidation-Pressure Curves
Plate 17 - Atterberg Limits
Plate 18 - Sieve Analysis
Plates 19 through 28 - Hveem Stabilometer Tests
Appendix A - Logs of Test Pits

CONFORMED

GEOLABS, INC.

3151

BORING LOG B-1

Drilling Date Jan. 18, 1972 Driving Wt. 300 lbs. Elevation 40 ft.

Job Milpitas I.I.D. 71-4 Drop 18 inches Work Order 23-238-70

Sample	Depth ft	Blows ft	Moisture %	Density pcf	Dr Unit Weight pcf	Depth ft	Graphic	USCS	Description
								GC GP	Clayey, sandy gravel, light brown, coarse grained, medium dense
2		5/10/13	12.0						
								CH	Gravelly clay, dark brown, high plasticity, moist, stiff
5		6/10/8	13.2	108.6		5			
								CL	Sandy clay, moderate plasticity, tan with occasional rusty brown streaks, damp, stiff (coarse sand to fine gravel)
								CH	Clay, light grey with white streaks, high plasticity, moist, stiff
8		5/9/13	20.7	98.0					
					10				
13		7/10/18	20.5	103.7					
								CH	Clay, brown with streaks, high plasticity, moist, very stiff
					15				
									Grading sandy
18		7/7/6	17.9	103.2				CL	Clay, light brown, low to moderate plasticity, very moist, stiff
					20				

CONFORMED

PLATE 3

GEOLABS, INC.

3151

BORING LOG B-1 (continued)

Drilling Date Jan. 18, 1972 Driving Wt. 300 lbs. Elevation 40 ft.

Job Milpitas I.I.D. 71-4 Drop 18 inches Work Order 23-238-70

Sample Depth ft	Blows/6"	Moisture Content %	Dry Unit Weight pcf	Depth ft	Test	Graphic Symbol	Description
						CL	Clay, light brown, low to moderate plasticity, very moist, stiff (continued)
23	12/12/16						
				25			
						GC SC	Grading sandy to gravelly
28	13/17/29	14.0	109.6			CL SC	Sandy clay, brown, moderate plasticity, moist, very stiff
				30		CL	Clay, tan with bluish grey and rusty brown streaks, moderate plasticity, moist, very stiff
33	10/15/20	16.8	107.2				
				35			
							Grading sandy
38	13/19/31	13.8	114.4				
				40			

CONFORMED

PLATE 3-A

GEOLABS, INC.

BORING LOG B-1 (continued)

Drilling Date Jan. 18, 1972 Driving Wt. 300 lbs. Elevation 40 ft.

Job Milpitas, I.I.D. 71-4 Drop 18 inches Work Order 23-238-70

Sample	Depth ft	Blows/ft	Moisture Content %	Dry Unit Weight pcf	Depth in feet	Graphic Log	Description
							Grading sandy (continued)
43		18/35/52	16.7	109.3			Sandy clay, light brown to tan, moderate plasticity, moist, very stiff
					45		
							Occasional coarse sand
48		26/38/45	17.6	107.1			
					50		
						CH	Clay, brown with occasional tan streaks, high plasticity, moist, hard
53		39/46	20.0	103.2			
					55		
							Grading gravelly
58		45/55	19.3	109.2			
					60		

CONFORMED

GEOLABS, INC.

3151

BORING LOG B-1 (continued)

Drilling Date Jan. 18, 1972 Driving Wt. 300 lbs. Elevation 40 ft.

Job Milpitas, L.I.D. 71-4 Drop 18 inches Work Order 23-238-70

Sample	Depth ft	Blows/ft	Moisture Content %	Dry Unit Weight pcf	Depth ft	Graphic	USCS	Description
								Grading gravelly (continued)
63		20/40	16.9	109.1				
								Grading sandy
					65			
							CH	Clay, brown with green tint and rusty brown streaks, high plasticity, moist, hard
68		37/47	16.0	110.7				
					70			
							CH	Clay, blue-green, high plasticity, damp to moist, hard
73		23/35	11.3	110.0				
					75			
							CL	Sandy clay, light brown with tan streaks, moist, moderate plasticity, hard
79		29/50	16.6	108.0				
					80			Termination Depth: 80 feet

CONFORMED

GEOLABS, INC.

BORING LOG B-2

3151

Drilling Date Jan. 18, 1972 Driving Wt. 300 lbs. Elevation 46.5 ft.

Job Milpitas, I.J.D. 71-4 Drop 18 inches Work Order 23-238-70

Sample	Depth ft	Blows per ft	Moisture Content %	Dry Unit Weight pcf	Depth in feet	Graphic Log	Description
						GP GC	Clayey sand and gravel, light brown, coarse grained, medium dense
2		8/15/17 14.3					
						CH	Clay, dark brown with occasional light brown streaks, high plasticity, damp to moist, stiff
5		1/3/6 14.7			5	CL	Sandy clay, brown, low to moderate plasticity, damp, firm
8½		3/6/8 17.8				CH	Clay, dark brown to black with occasional yellow streaks, high plasticity, firm
					10	CL	Sandy clay, brown with tan streaks, moderate plasticity, moist, stiff
14		7/12/18 19.9			15	CH	Clay, brown with tan and occasional yellow streaks, high plasticity, moist, stiff
19		7/14/23 18.0			20	CL	Clay, light brown with dark brown and rusty brown streaks, high plasticity, moist, very stiff

CONFORMED

GEOLABS, INC.

3151

BORING LOG B-2 (continued)

Drilling Date Jan. 19, 1972 Driving Wt. 300 lbs. Elevation 46.5 ft.

Job Milpitas, I.I.D. 71-4 Drop 18 inches Work Order 23-238-70

Sample	Depth ft	Blows/ft	Moisture Content %	Dry Unit Weight pcf	Depth in feet	Graphic Log	Description
						CL	Clay, light brown with dark brown and rusty brown streaks, high plasticity, moist, very stiff (continued)
24		11/12/15	17.6	110.0	25		Occasional coarse sand to fine gravel
							Grading sandy
29		6/14/17	19.5	106.4	30	CH	Clay with occasional coarse sand, light brown with light tan and dark brown streaks, high plasticity, moist, stiff
						CL	Sandy clay, tan with rusty brown and light tan streaks, medium to high plasticity, damp to moist, hard
34		25/55	25.7	101.2	35		
39		7/19/30					Occasional coarse sand, very stiff
					40		

CONFORMED

GEOLABS, INC.

BORING LOG B-2 (continued)

3151

Drilling Date Jan. 19, 1972 Driving Wt. 300 lbs. Elevation 46.5 ft.

Job Milpitas, L.I.D. 71-4 Drop 18 inches Work Order 23-238-70

Sample	Depth ft	Blows per ft	Moisture Content %	Dry Unit Weight pcf	Depth in feet	Graphic Log	Description
							Occasional coarse sand, very stiff (continued)
44		13/51	17.7	108.6	45		Occasional gravel
49		11/13/17	21.2	105.3	50		
							Grading gravelly
54		11/24	13.7	114.5	55	CH	Clay, brown with occasional light tan streaks, high plasticity, moist, very stiff to hard
							Grading darker brown
59		11/35	19.2	105.6	60		

CONFORMED

GEOLABS, INC.

BORING LOG B-2 (continued)

3151

Drilling Date Jan. 19, 1972 Driving Wt. 300 lbs. Elevation 46.5 ft.

Job Milpitas, L.I.D. 71-4 Drop 18 inches Work Order 23-238-70

Sample	Depth ft	Blows/ft	Moisture Content %	Dry Unit Weight pcf	Depth ft	Graphic Log	USCS	Description
								Grading darker brown (continued)
64	14/29							Occasional fine gravel
					65			
69	19/32	22.5	102.7				CH	Clay with occasional fine gravel, brownish green with light tan and brown streaks, high plasticity, moist, very stiff to ha
					70			
74	12/40	20.2						
					75			
79	18/42	19.0	107.2					Grading silty
					80			
								Termination Depth: 80 feet

CONFORMED

GEOLABS, INC.

3151

BORING LOG 1-3

Drilling Date Jan. 19, 1972 Driving Wt. 300 lbs. Elevation 40.5 ft.

Job Milpitas I I D 71-4 Drop 18 inches Work Order 23-238-70

Sample	Depth ft	Blows/ft	Moisture Content %	Dry Unit Weight pcf	Depth in feet	Graphic	USCS	Description
							GP GC	Clayey, sandy gravel, brown, medium dense
2		6/13					CH	Clay with occasional gravel, dark brown, high plasticity, damp to moist, stiff
3½		8/14	18.5	102.5	5			
							CH	Clay, dark grey, high plasticity, moist, firm
9		5/7	22.0	95.1	10			
13		3/6	19.5	101.6			CH	Clay with occasional coarse sand, light brown with light tan streaks, high plasticity, moist, firm
					15			
18		5/6	15.8	106.5			CL	Sandy clay, brown with light brown streaks, moderate plasticity, moist, firm
					20			

CONFORMED

PLATE 5

GEOLABS, INC.

3151

BORING LOG B-3 (continued)

Drilling Date Jan. 19, 1972 Driving Wt. 300 lbs. Elevation 40.5 ft.

Job Milpitas I.I.D. 71-4 Drop 18 inches Work Order 23-238-70

Sample	Depth ft	Blows per ft	Moisture Content %	Dry Unit Weight pcf	Depth in Feet	Graphic Log	Description
						CL	Sandy clay, brown with light brown streaks, moderate plasticity, moist, firm (continued)
							Grading sandy
23		7/10	22.2	100.2		SC	Clayey sand, light brown, fine with occasional coarse sand, loose to medium dense
					25	CL	Clay with occasional coarse sand, light brown to tan with light tan and dark brown streaks low to moderate plasticity, moist to very moist, stiff
28		6/12	16.5	107.5			
					30		
33		15/16	17.0	107.6			
					35		
38		12/38				CL SC	Clayey sand, light brown, coarse grained, medium dense, with occasional fine gravel
					40		

CONFORMED

PLATE 5-A

GEOLABS, INC.

3151

BORING LOG B-3 (continued)

Drilling Date Jan. 19, 1972 Driving Wt. 300 lbs. Elevation 40.5 ft.

Job Milpitas, I.I.D. 71-1 Drop 18 inches Work Order 23-238-70

Sample	Depth ft	Blows/6 in ft	Moisture Content %	Dry Unit Weight lb/cu ft	Depth in	Graphic Log	Description
						CL	Sandy clay with occasional coarse sand, light brown, moderate plasticity, very stiff
43		12/25	17.7	109.0			
					45		
48		11/18	17.8	108.7			
					50		
						CH	Clay, brown with occasional tan streaks, high plasticity, moist, very stiff
53		13/20	22.2	104.0			
					55		
58		15/41	18.7	109.0			Grading to hard
					60		

CONFORMED

GEOLABS, INC.

3151

BORING LOG B-3 (continued)

Drilling Date Jan. 19, 1972 Driving Wt. 300 lbs. Elevation 40.5 ft.

Job Milpitas I.I.D. 71-4 Drop 18 inches Work Order 23-238-70

Sample	Depth ft	Blows Per ft	Moisture Content %	Dry Unit Weight pcf	Depth in Feet	Graphic Log	Description
							Grading to hard (continued)
63		15/30	20.8	104.2			
					65		
68		15/20	22.4	103.3			
					70		
73		18/24	11.6				
					75		
							Grading sandy to gravelly (fine)
						CL	Sandy clay with occasional coarse sand, tan, moderate plasticity, moist, hard
79		24/38	14.9	113.6			
					80		
							Termination Depth: 80 feet

CONFORMED

GEOLABS, INC.

3151

BORING LOG B-4

Drilling Date Jan. 20, 1972 Driving Wt. 300 lbs. Elevation 46.7 ft.

Job Milpitas, I.I.D. 71-4 Drop 18 inches Work Order 23-238-70

Sample	Depth ft	Blows/ft	Moisture Content %	Dry Unit Weight pcf	Depth ft	Graphic Log	USCS	Description
							GC GP	Clayey, sandy gravel, brown, coarse, medium dense
2		7/11	30.4				CH	Clay with occasional coarse sand, dark brown to black, high plasticity, damp to moist, stiff
								Grading lighter brown
5		10/12	8.4	116.3	5		GC GP	Clayey, sandy gravel, tan with some yellow streaks, coarse, medium dense
9		7/9	16.7	107.3	10		CL	Gravelly to sandy clay, grey with occasional yellowish brown streaks, moderate plasticity, moist, stiff
								Grading brown
14		7/11	22.4	99.2	15		CH	Clay, greyish brown with light tan and dark brown streaks and occasional yellow streaks, high plasticity, moist, very stiff
19		9/11	19.2	105.5	20		CL	Sandy clay, tan with light tan, dark brown and rusty brown streaks, moderate plasticity, moist, stiff

CONFORMED

GEOLABS, INC.

3151

BORING LOG B-4 (continued)

Drilling Date Jan. 20, 1972 Driving Wt. 300 lbs. Elevation 46.7 ft.

Job Milpitas, I.I.D. 71-4 Drop 18 inches Work Order 23-2718-70

Sample Depth ft	Blows per ft	Moisture Content %	Dry Unit Weight pcf	Depth in feet	Graphic Log	Description
					CL	Sandy clay, tan with light tan, dark brown and rusty brown streaks, moderate plasticity, moist, stiff (continued)
24	22/31	16.2	116.1	25	GC SC	Clayey gravel to clayey sand, light brown, coarse to fine gravel, coarse sand, dense
29	8/14	21.0	103.2	30	CH	Clay with occasional coarse sand, tan with light tan and occasional dark brown and rusty brown streaks, high plasticity, moist, stiff
34	10/18	22.4	103.5		CL	Sandy clay, tan with rusty brown, light tan and brown streaks, moderate plasticity, damp to moist, stiff
				35	SC	Clayey sand, brown, coarse, medium dense
					CL	Sandy clay, light brown with light tan streaks, moderate plasticity, moist, very stiff
39	18/18	18.5	107.0	40		

CONFORMED

GEOLABS, INC.

3151

BORING LOG B-4 (continued)

Drilling Date Jan. 20,1972 Driving Wt. 300 lbs. Elevation 46.7 ft.

Job Milpitas, I.I.D. 71-4 Drop 18 inches Work Order 21-238-70

Sample	Depth ft	Blows ft	Atterberg	Content %	Dry Unit Weight pcf	Depth m	Graphic Log	Description
							CL	Sandy clay, light brown with light tan streaks, moderate plasticity, moist, very stiff (continued)
44		18/35	14.7	112.0		45	SC	Clayey sand, light brown, varies from coarse to fine, dense to very dense
49		11/18	20.2	103.9		50	CL	Sandy clay with occasional coarse sand, light brown with light tan and occasional rusty brown streaks, moderate plasticity, moist, very stiff
54		21/32	16.1	112.5		55	CH	Clay, brown with occasional light tan and rusty brown streaks, high plasticity, moist, hard
59		17/37	16.5	109.4		60		

CONFORMED

GEOLABS, INC.

3151

BORING LOG B-4 (continued)

Drilling Date Jan. 20, 1972 Driving Wt. 300 lbs. Elevation 46.7 ft.

Job Milpitas, I.I.D. 71-4 Drop 18 inches Work Order 23-238-70

Sample	Depth ft	Blows/6 in	Moisture Content %	Dry Unit Weight pcf	Depth ft	Graphic Log	Description
						CH	Light brown with light tan and blue-green streaks
							Grading blue-green
64	27/36		22.7	105.0	65		
69	22/24		19.7	108.1	70		
74	26/39		19.0	109.9	75		
79	16/28		17.8	106.8	80		Occasional coarse sand

CONFORMED

GEOLABS, INC.

3151

BORING LOG B-4 (continued)

Drilling Date Jan. 20, 1972 Driving Wt. 300 lbs. Elevation 46.7 ft.

Job Milpitas, L.I.D. 71-4 Drop 18 inches Work Order 23-238-70

Sample Depth ft	Blows/6 in.	Moisture Content %	Dry Unit Weight pcf	Depth in feet	Graphic Log	Description
						Occasional coarse sand (continued)
					SC GC	Clayey sand to gravel, light brown, coarse sand to fine gravel, very dense
84	50/60 for 4"	11.8	114.6			
				85		
						Termination Depth: 85 feet

CONFORMED

GEOLABS, INC.

3151

Date March 1, 1972

Job Bissell & Karn

W.O. 23-238-70

SHEAR TEST DIAGRAM

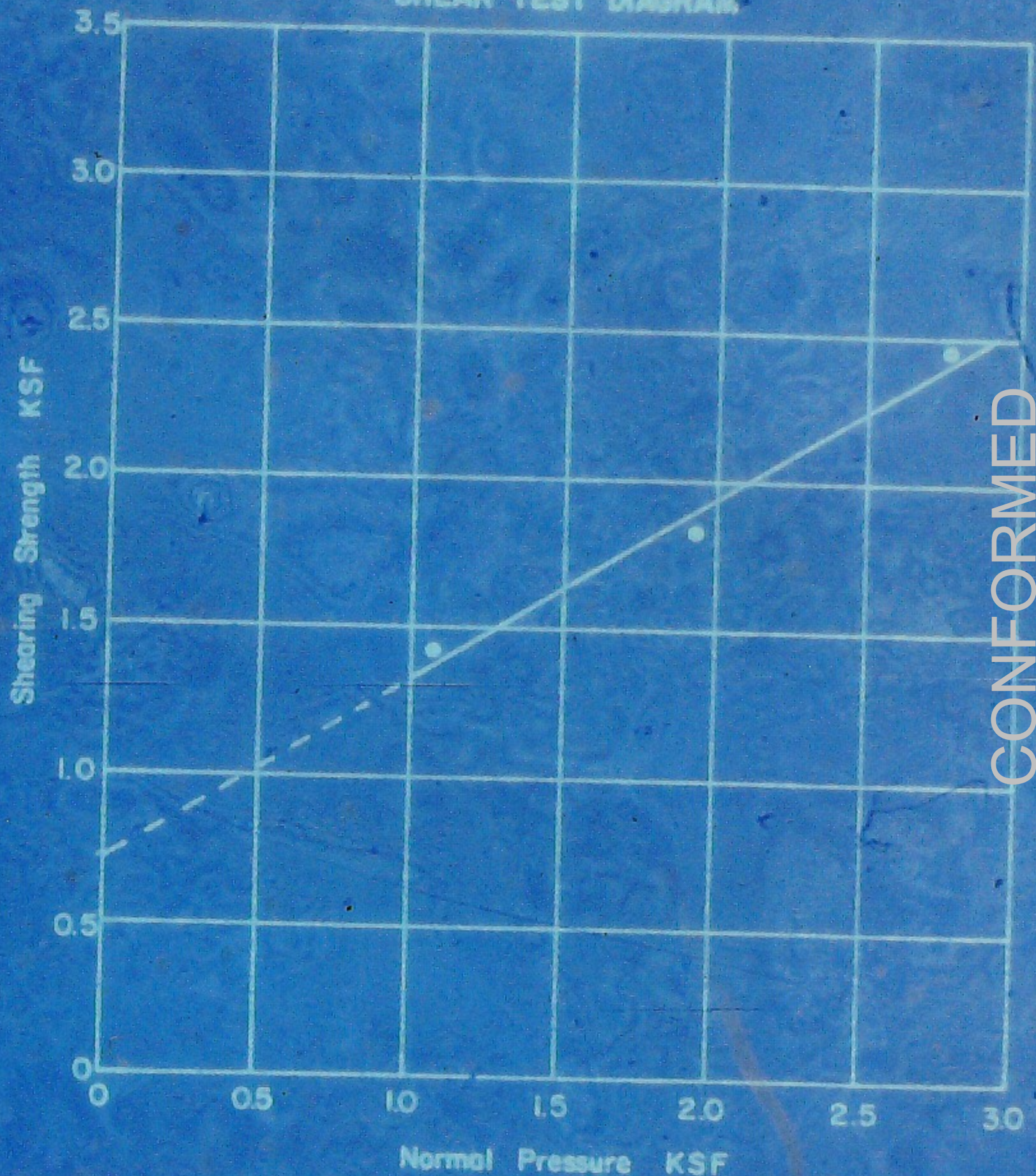

B-3 @ 43'
c = 0.7 KSF
ø = 32°

Key:

○ Tests at field moisture content.

● Tests at saturated moisture content.

PLATE 7

CONFORMED

3151

GEOLABS, INC.

Date March 1, 1972

Job Bissell & Karn

W.O. 23-238-70

SHEAR TEST DIAGRAM

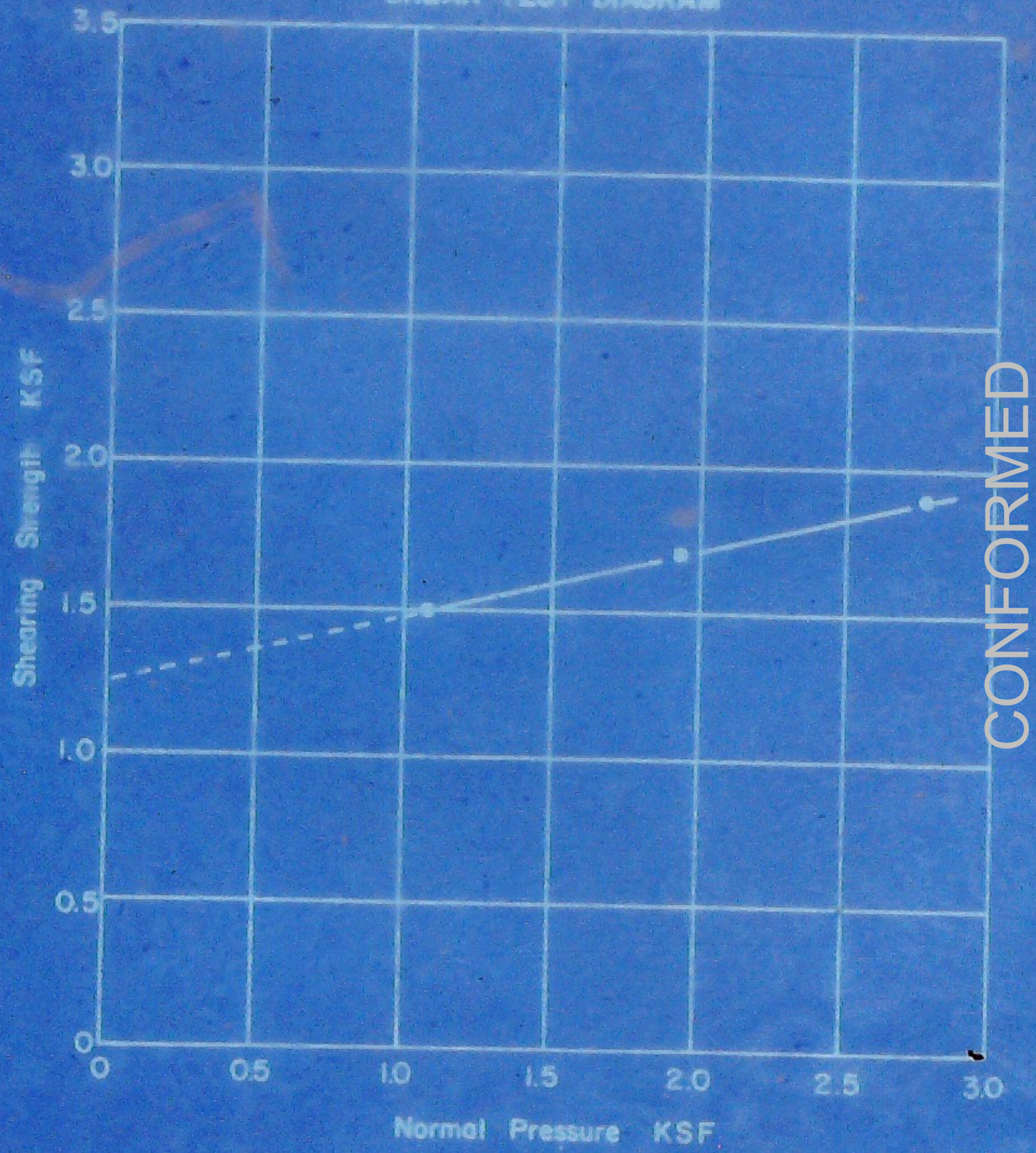

B-3 @ 53'
c = 1.25 KSF
ø = 13°

Key:

○ Tests at field moisture content.

● Tests at saturated moisture content.

CONFORMED

PLATE 8

GEOLABS, INC.

! 3151

Date March 1, 1972

Job Bissell & Kern

W.O. 23-238-70

SHEAR TEST DIAGRAM

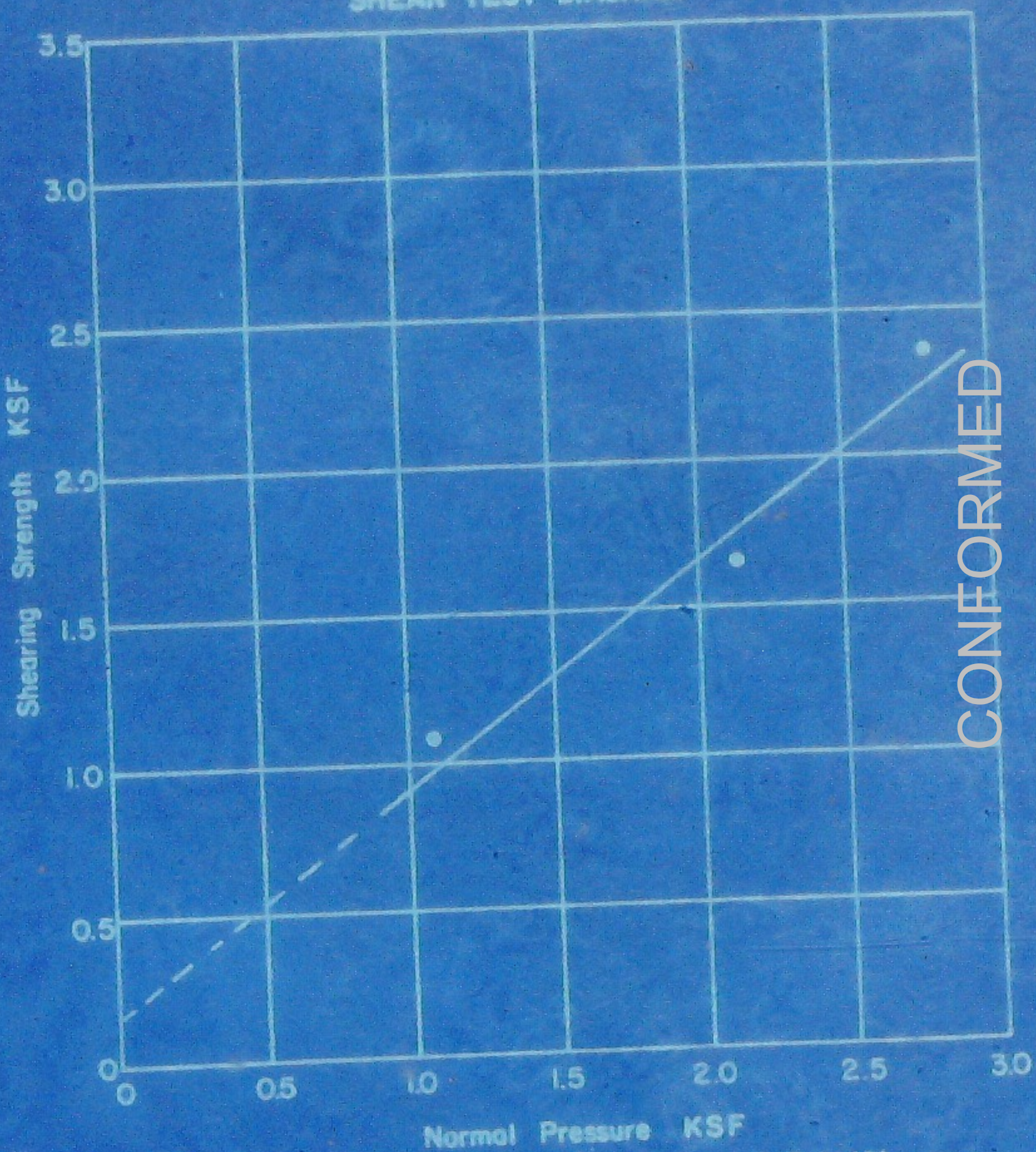

B-3 @ 63'
c = 0.15 KSF
ϕ = 37°

Key:

○ Tests at field moisture content.

● Tests at saturated moisture content.

PLATE 9

CONFORMED

GEOLABS, INC.

3151

Date March 1, 1972

Job Bissell & Karn

W.O. 23-238-70

SHEAR TEST DIAGRAM

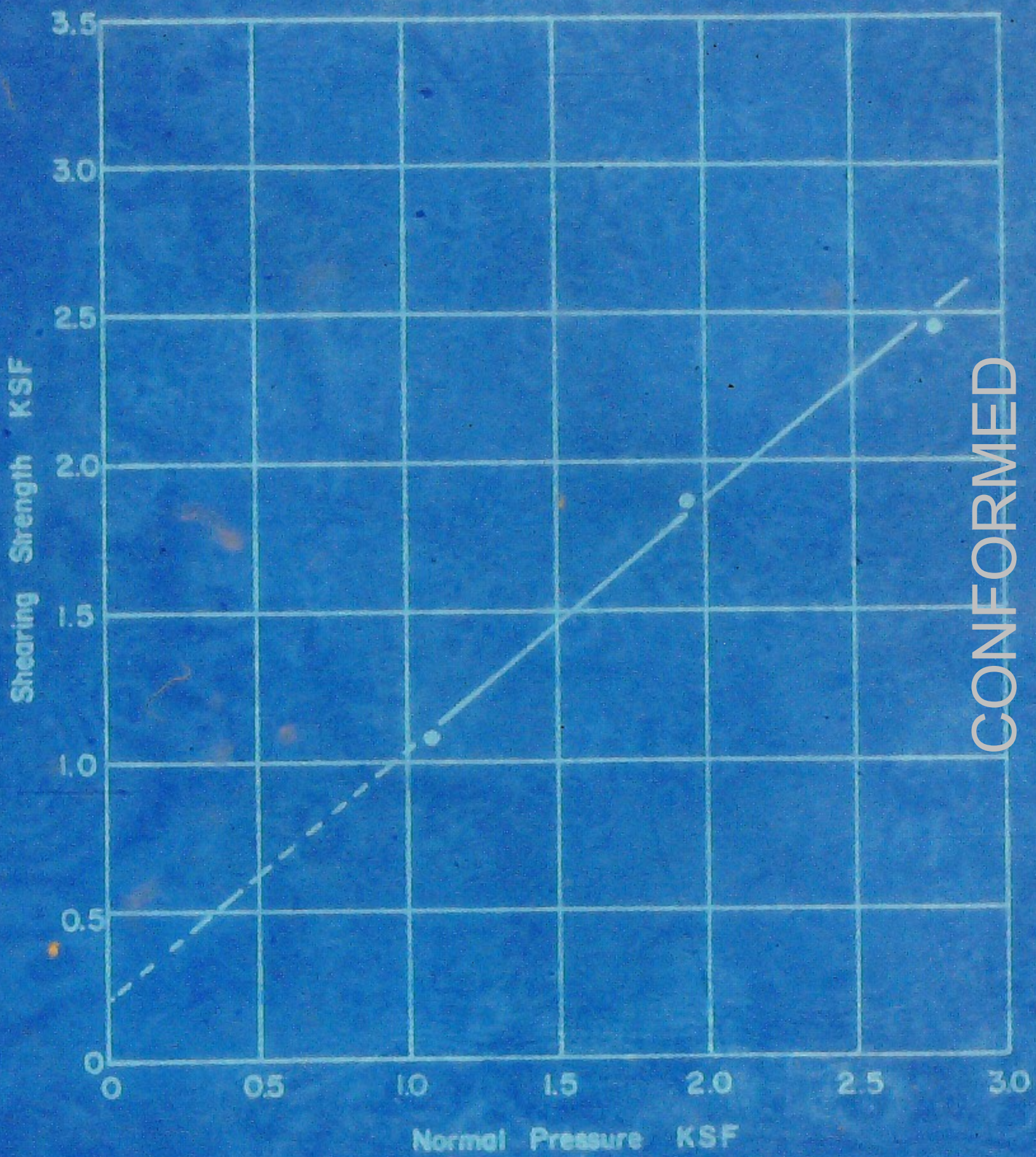

B-4 @ 44'
c = 0.2 KSF
ø = 40°

Key:

○ Tests at field moisture content.

● Tests at saturated moisture content.

CONFORMED

GEOLABS, INC.

3151

Date March 1, 1972

Job Bissell & Karn

W.O. 23-238-70

SHEAR TEST DIAGRAM

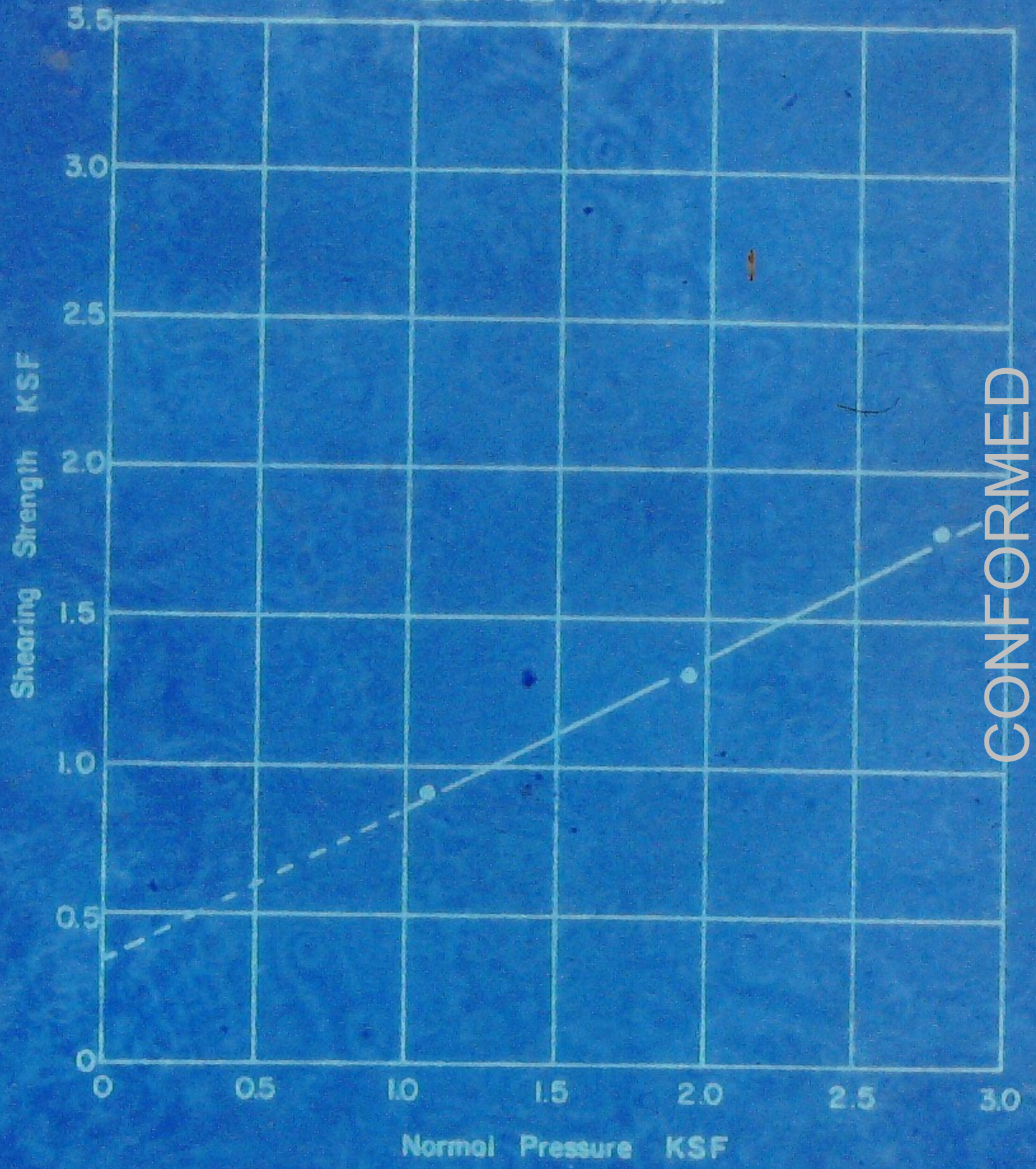

B-4 @ 49'
c = 0.35 KSF
ϕ = 27°

Key:

○ Tests at field moisture content.

● Tests at saturated moisture content.

CONFORMED

PLATE 11

GEOLABS, INC.

3151

Date March 1, 1972

Job Bissell & Karn

W.O. 23-238-70 Q

SHEAR TEST DIAGRAM

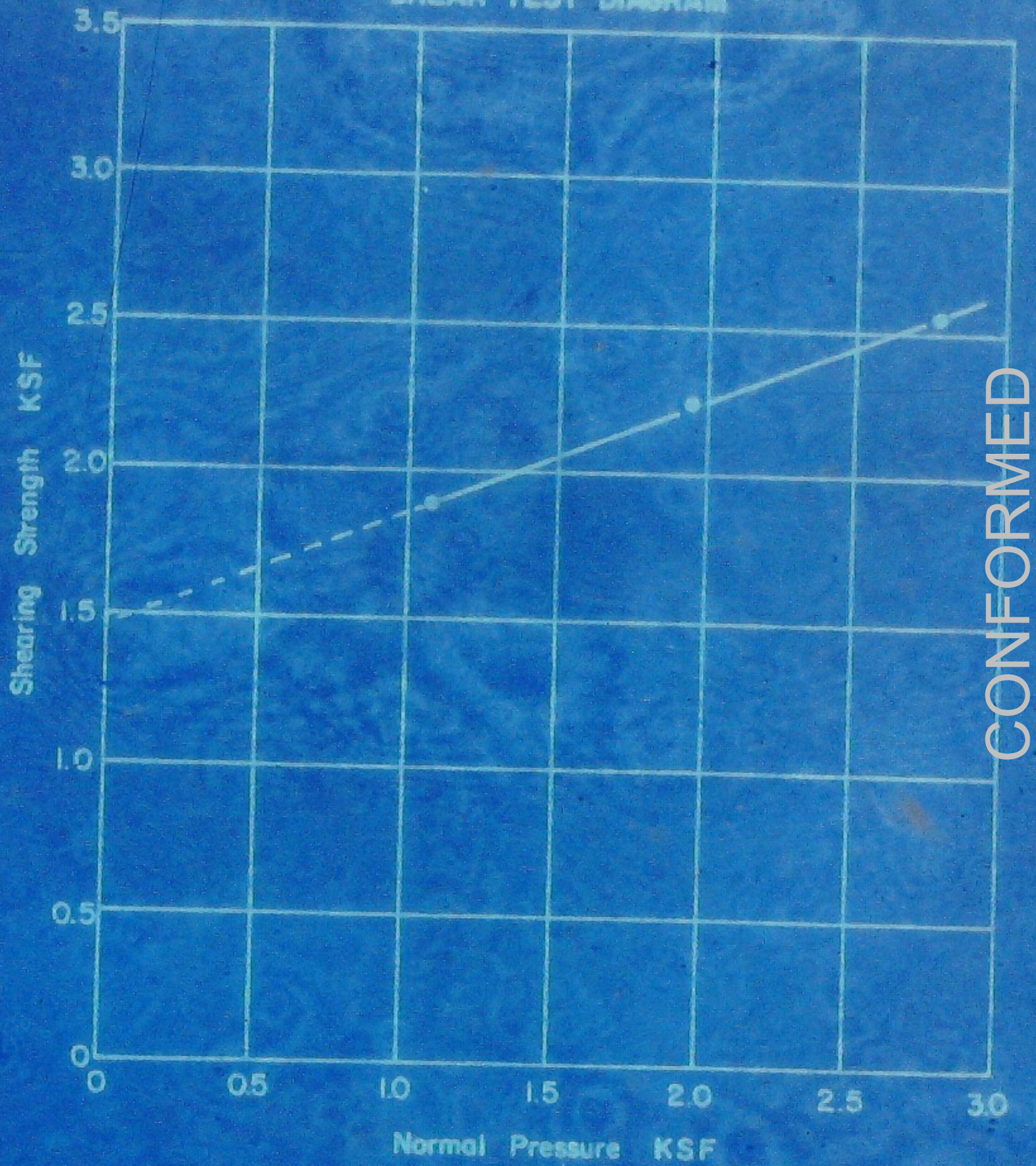

B-4 @ 54'
c = 1.45 KSF
ø = 21.5°

Key:

○ Tests at field moisture content.

● Tests at saturated moisture content.

CONFORMED

PLATE 12

GEOLABS, INC. 3151

Date March 1, 1972

Job Bissell & Karn W.O. 23-238-70

SHEAR TEST DIAGRAM

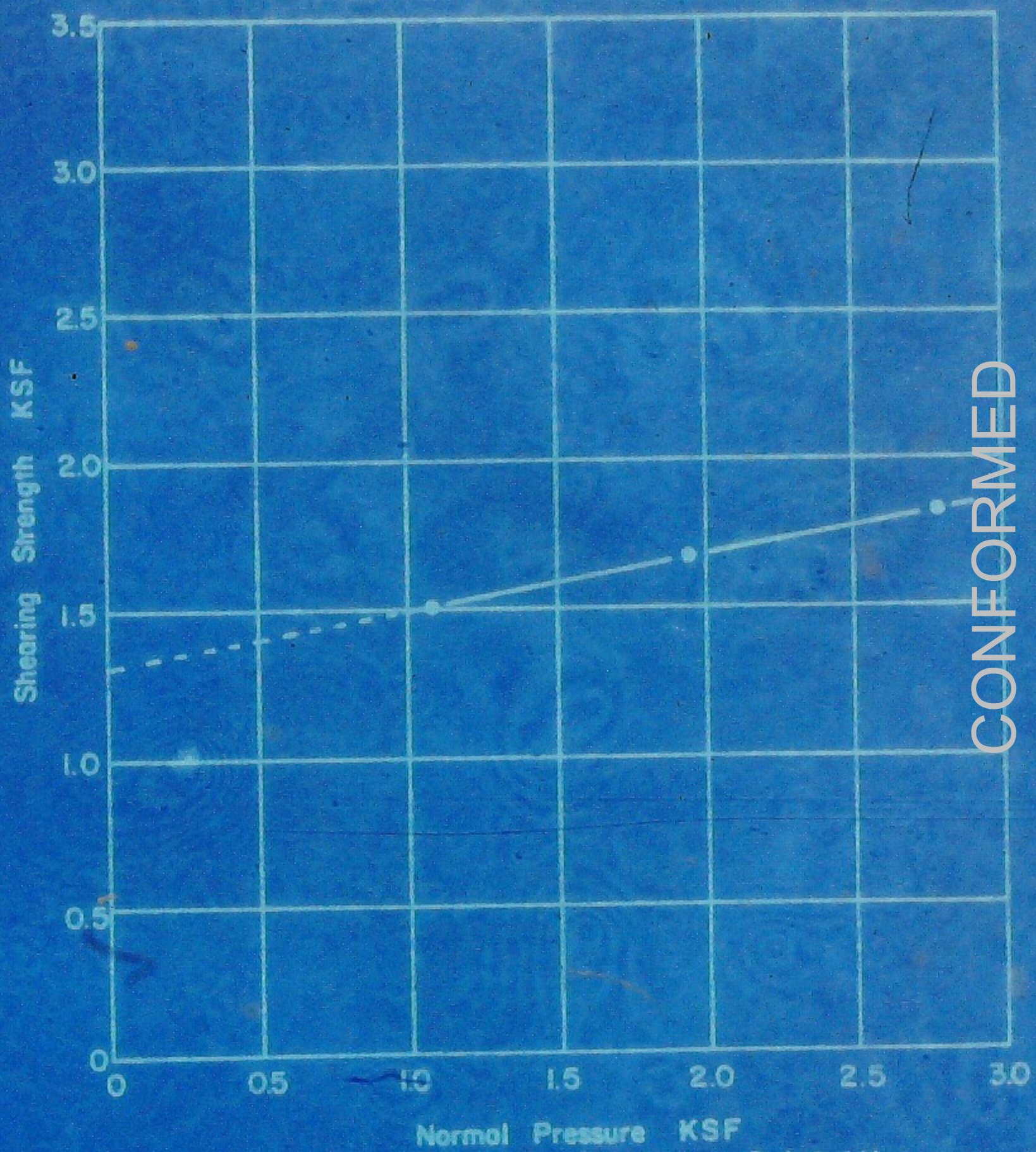

B-4 @ 64'
c = 1.3 KSF
ø = 10°

Key:

○ Tests at field moisture content.

● Tests at saturated moisture content.

CONFORMED

GEOLABS, INC.

3151

Date March 1, 1972

Job Bissell & Karn W.O. 23-238-70

SHEAR TEST DIAGRAM

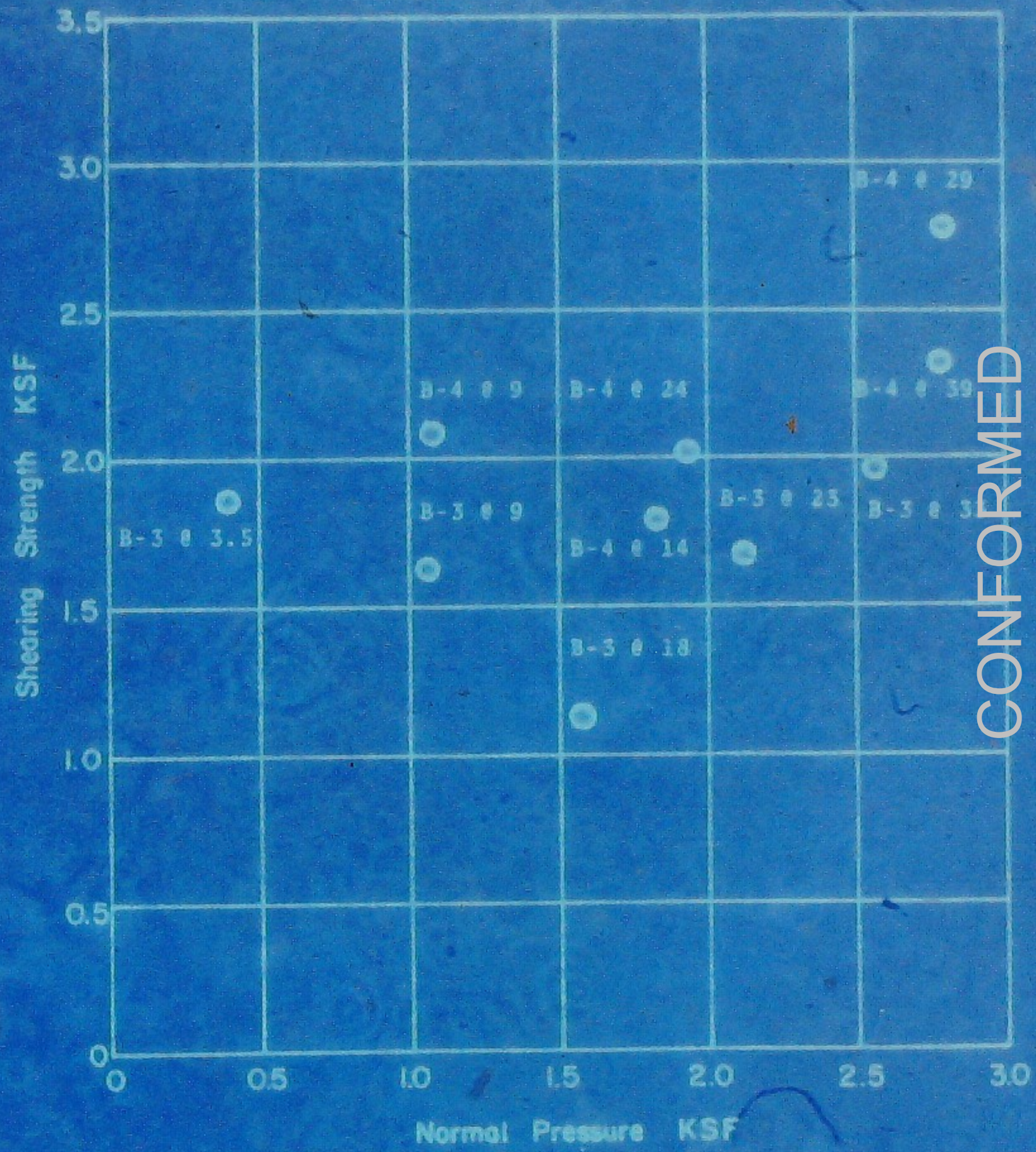

Key:

○ Tests at field moisture content.

● Tests at saturated moisture content.

CONFORMED

3151

GEOLABS INC.

DATE March 1, 1972

JOB Bissell & Karn

W.O. 23-238-70

BORING NO. 3

DEPTH 68 ft.

CONSOLIDATION - PRESSURE CURVE

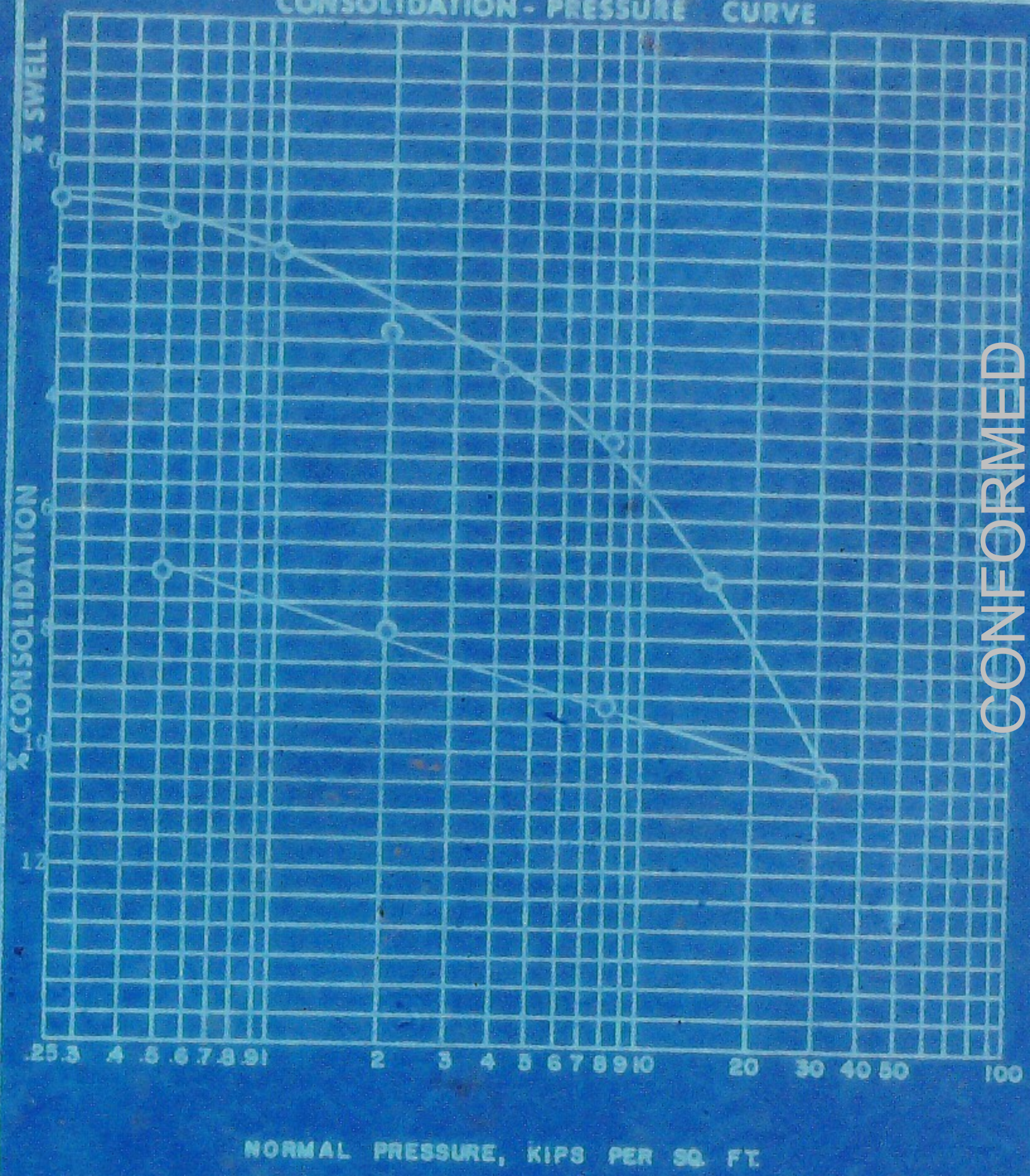

CONFORMED

PLATE 15

3151

GEOLABS INC.

DATE March 1, 1972

JOB Bianchi & Kern

W.O. 23-238-70

BORING NO. 4

DEPTH 69 ft.

CONSOLIDATION - PRESSURE CURVE

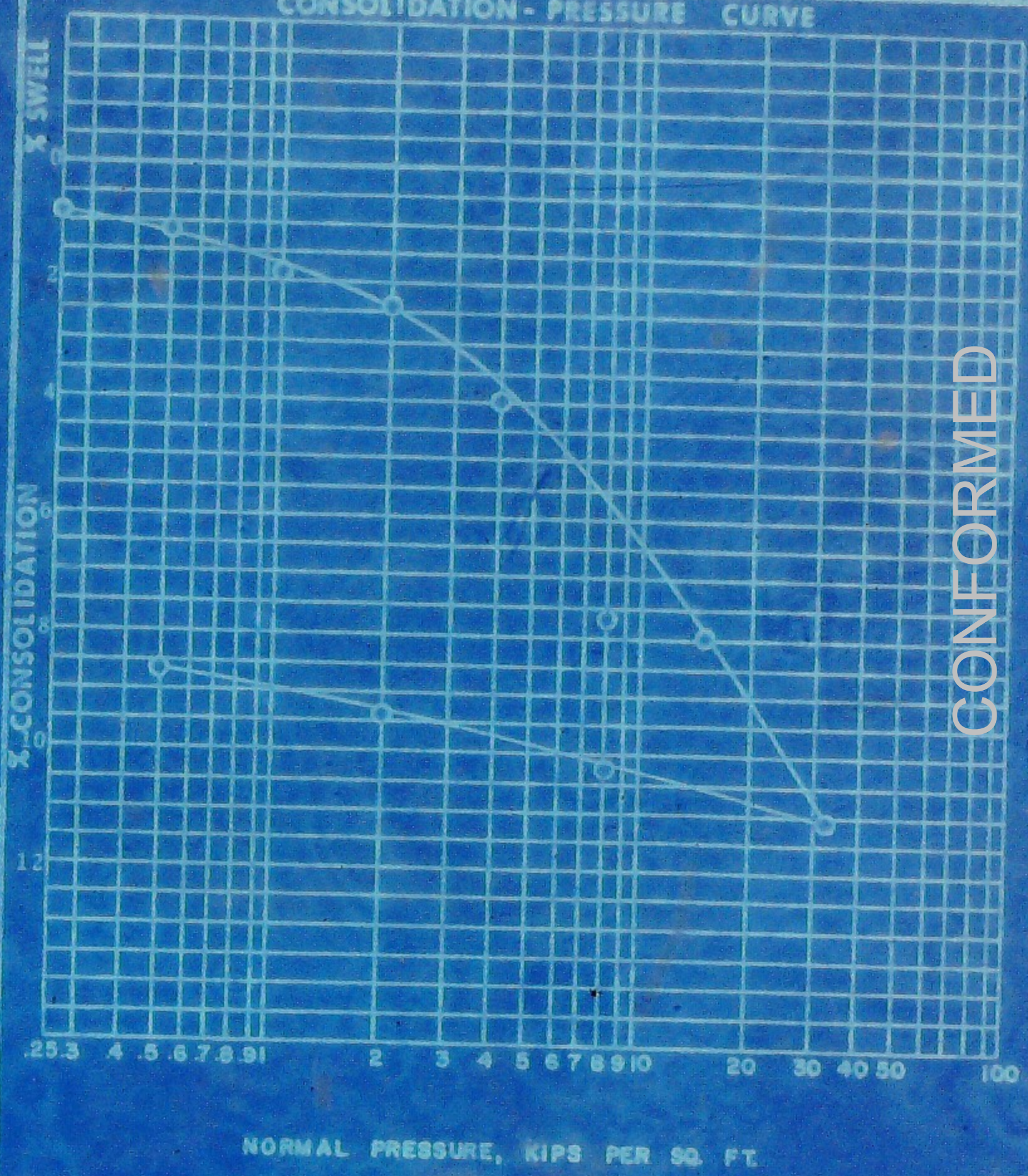

CONFORMED

PLATE 16

PLASTICITY CHART

3151

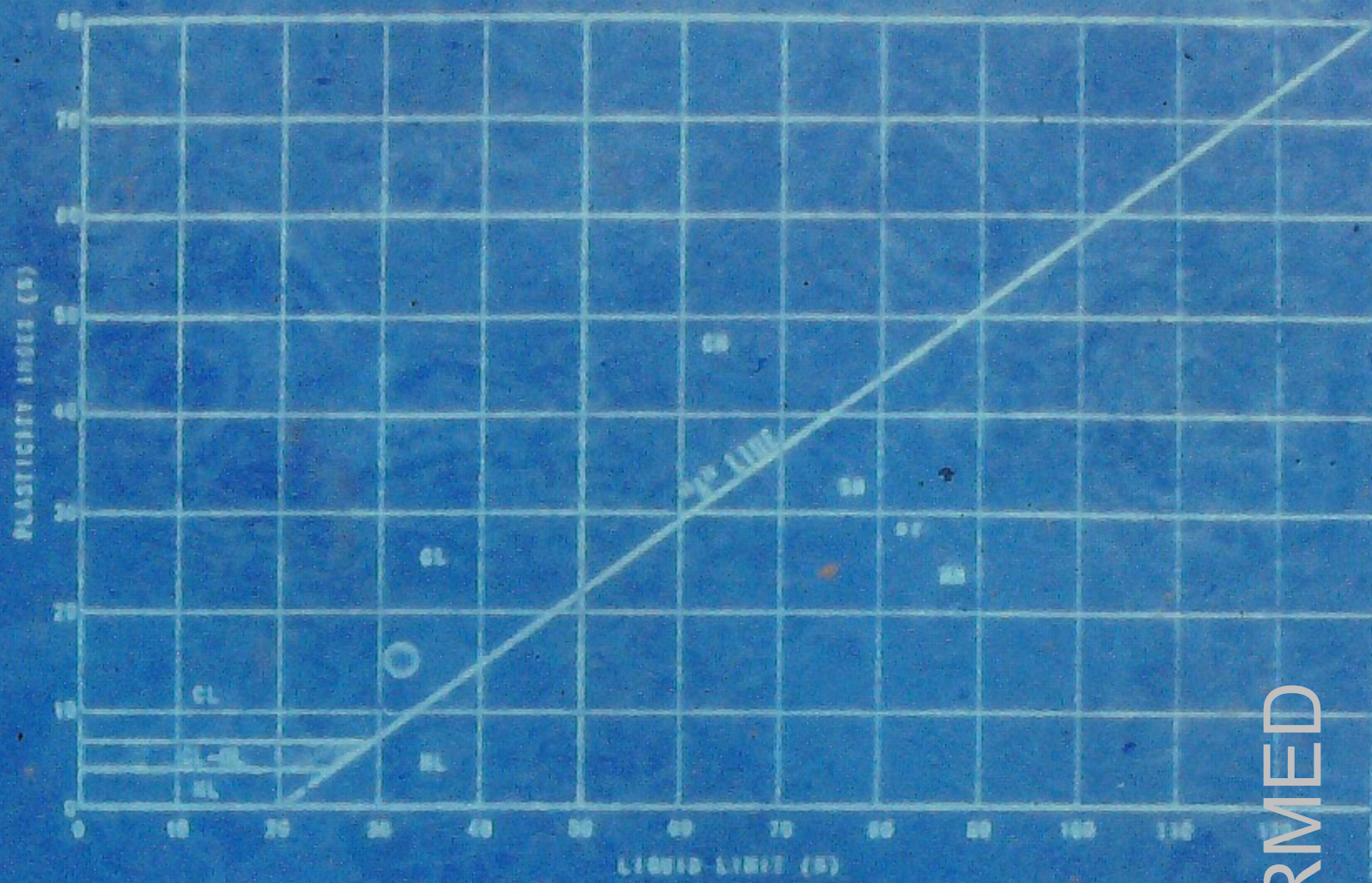

PLASTICITY DATA

KEY SYMBOL	HOLE NUMBER	DEPTH (feet)	NATURAL WATER CONTENT W (%)	PLASTIC LIMIT (%)	LIQUID LIMIT (%)	PLASTICITY INDEX (%)	LIQUIDITY INDEX $\left(\frac{W-P}{L-P}\right)$	UNIFIED SOIL CLASSIFICATION SYMBOL
●	B-4	59'		17.4	32.7	15.3		CL

GEOLABS, INC.
GEOLOGY AND SOIL ENGINEERING

DATE 3-7-77 BY RTG
SCALE ——— NO. 23-238-70

PLATE

CONFORMED

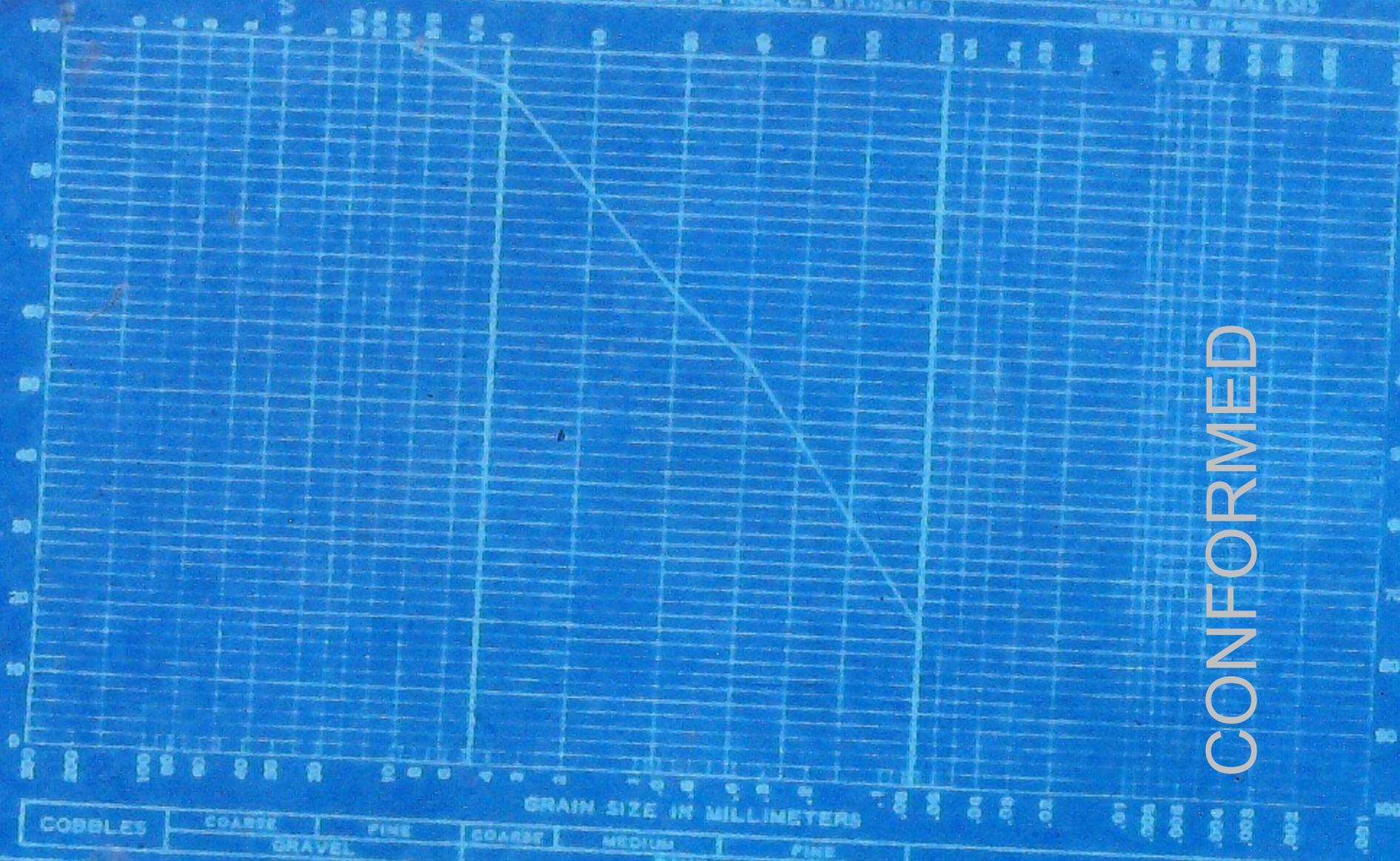

SAMPLE NO.	DEPTH -FT.	U.S.C.	CLASSIFICATION	NAT. W.C. %	LL	PL	PI
B-1	38	CL					

GRAIN SIZE CLASSIFICATION

GEOLABS-CALIFORNIA, INC.

3151

CONFORMED

PLATE 18

Job No. 15-138-70
File No. T6128-11
Lab. No. 11770
February 22, 1972

3151

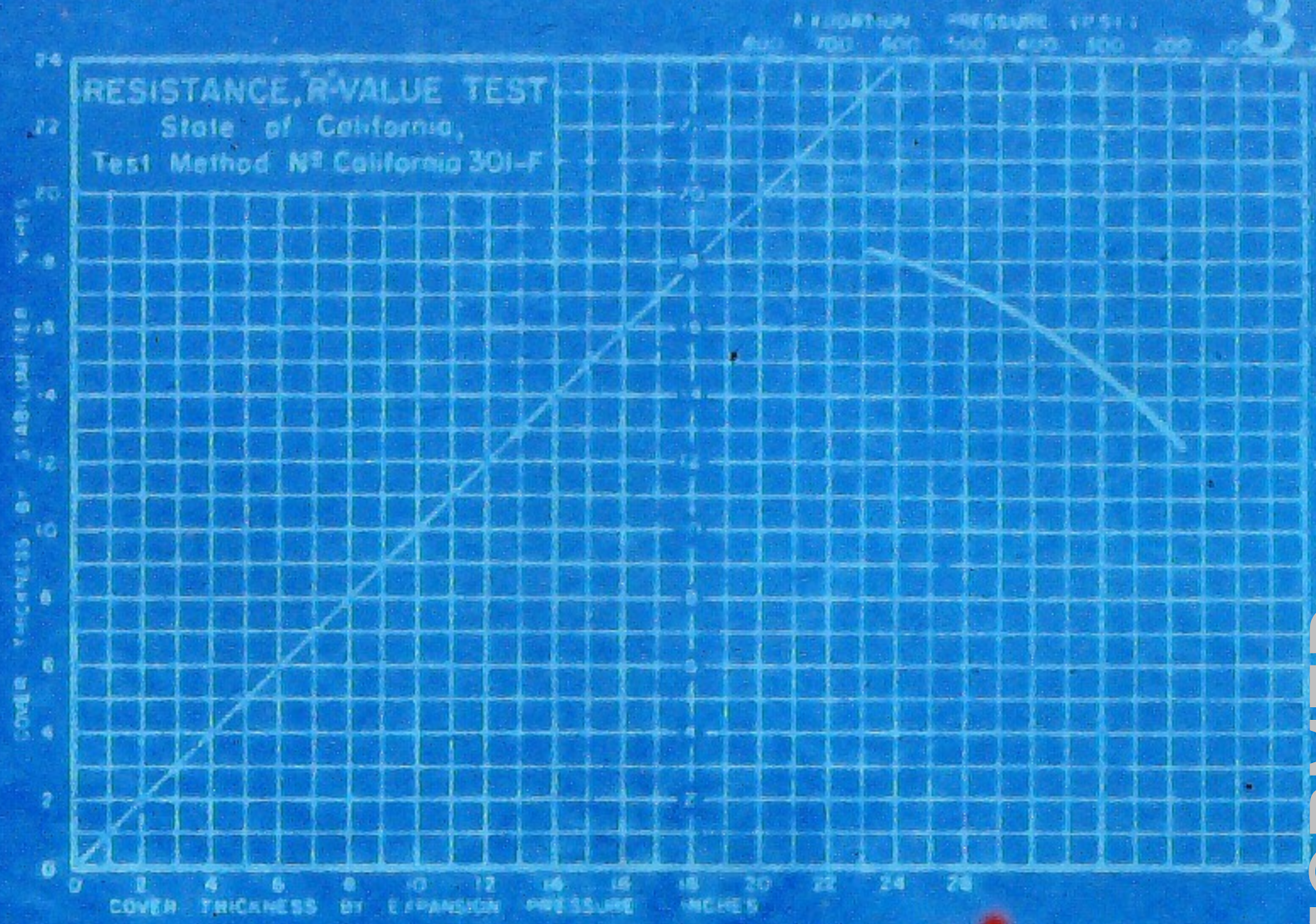

Sample: Pt I @ 0' to 2'

Description: Lt. Brwn. Sandy Silt

Specimen	A	B	C
Exudation Pressure, p.s.i.	223	350	597
Expansion dial (.0001")	13	20	28
Expansion Pressure, p.s.f.	56	87	121
Resistance Value, "R"	48	57	70
% Moisture at Test	11.3	10.9	10.4
Dry Density at Test, p.c.f.	120.9	122.2	123.2
"R" Value at 300 p.s.i. Exudation Pressure	= (54)		

CONFORMED

Lab. No. 11706
February 4, 1972
Job No. 23-238-70

3151

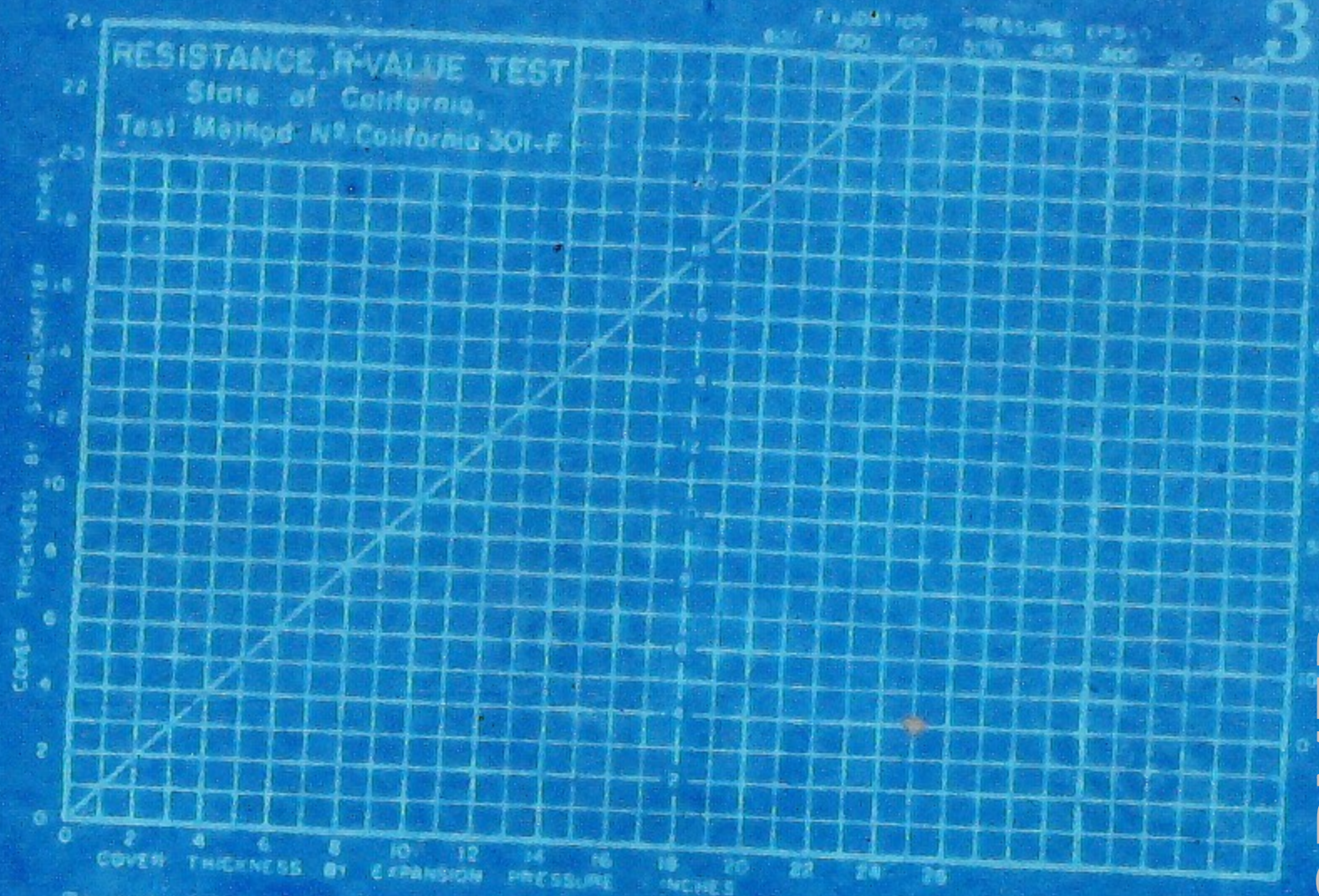

Sample: Pt. II at 2.5' to 3.0'

Description: Dark brown clay.

Specimen	A	B	C
Exudation Pressure,p.s.i.			
Expansion dial (.0001")			
Expansion Pressure,p.s.f.			
Resistance Value, "R"			
% Moisture at Test			
Dry Density at Test,p.c.f.			
"R" Value at 300 p.s.i. Exudation Pressure	= (*) Less than 5.		

*Sample extruded from beneath mold at 621 p.s.i. with one light lit.

CONFORMED

Job No. 73-238-78
File No. 73328-41
Lab. No. 11779
February 22, 1972

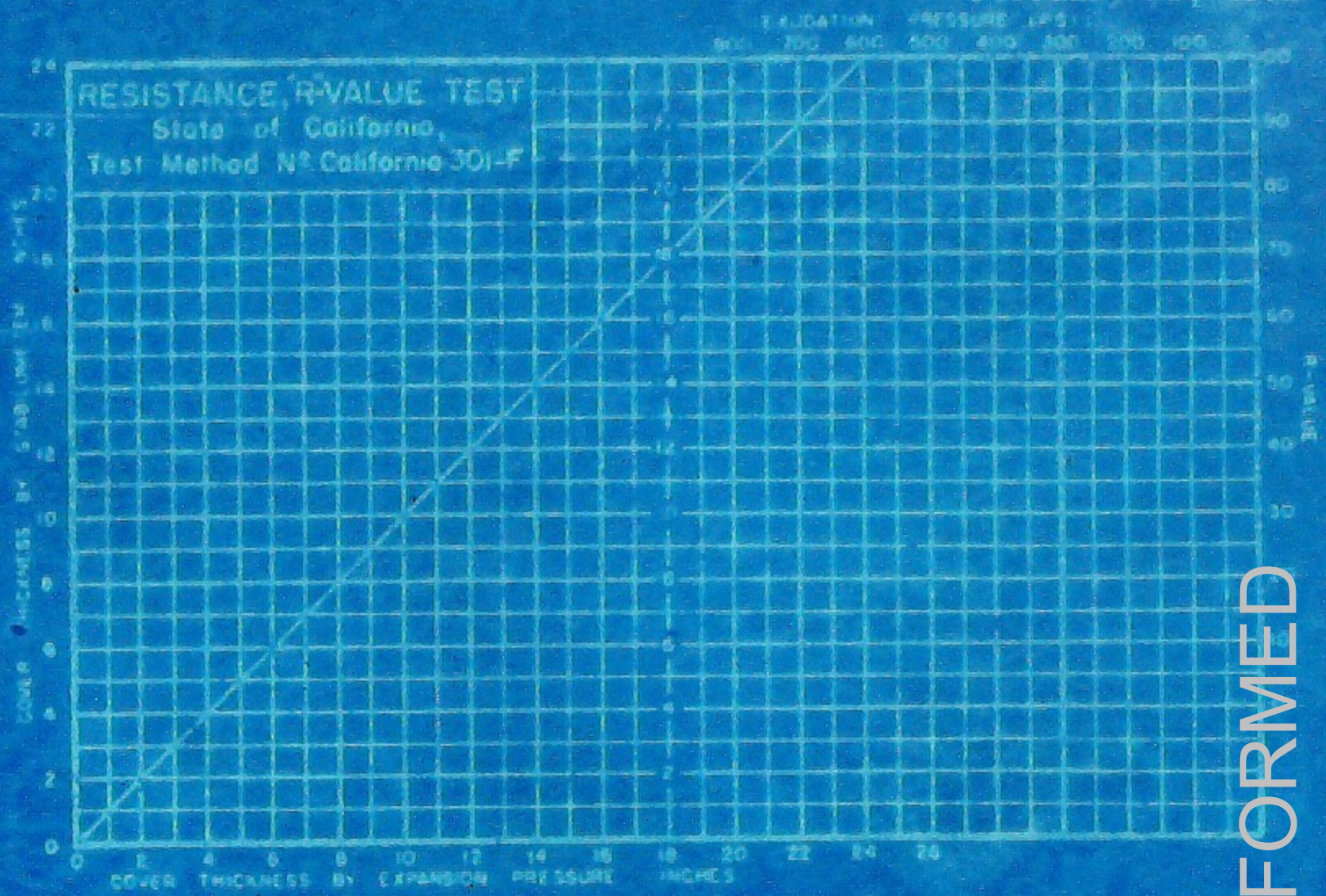

Sample: Pt IV @ 3' to 4'

Description: Tan mottled silty-clay

Specimen	A	B	C
Exudation Pressure, p.s.i			
Expansion dial (.0001")			
Expansion Pressure, p.s.f.			
Resistance Value, "R"			
% Moisture at Test			
Dry Density at Test, p.c.f.			
"R" Value at 300 p.s.i. Exudation Pressure	= (*) less than 5		

*NOTE: Sample extruded from mold @ 7,000 lb. load with no lights

CONFORMED

File No. 68328-H
Lab. No. 11706
February 4, 1972
Job No. 23-238-70

3151

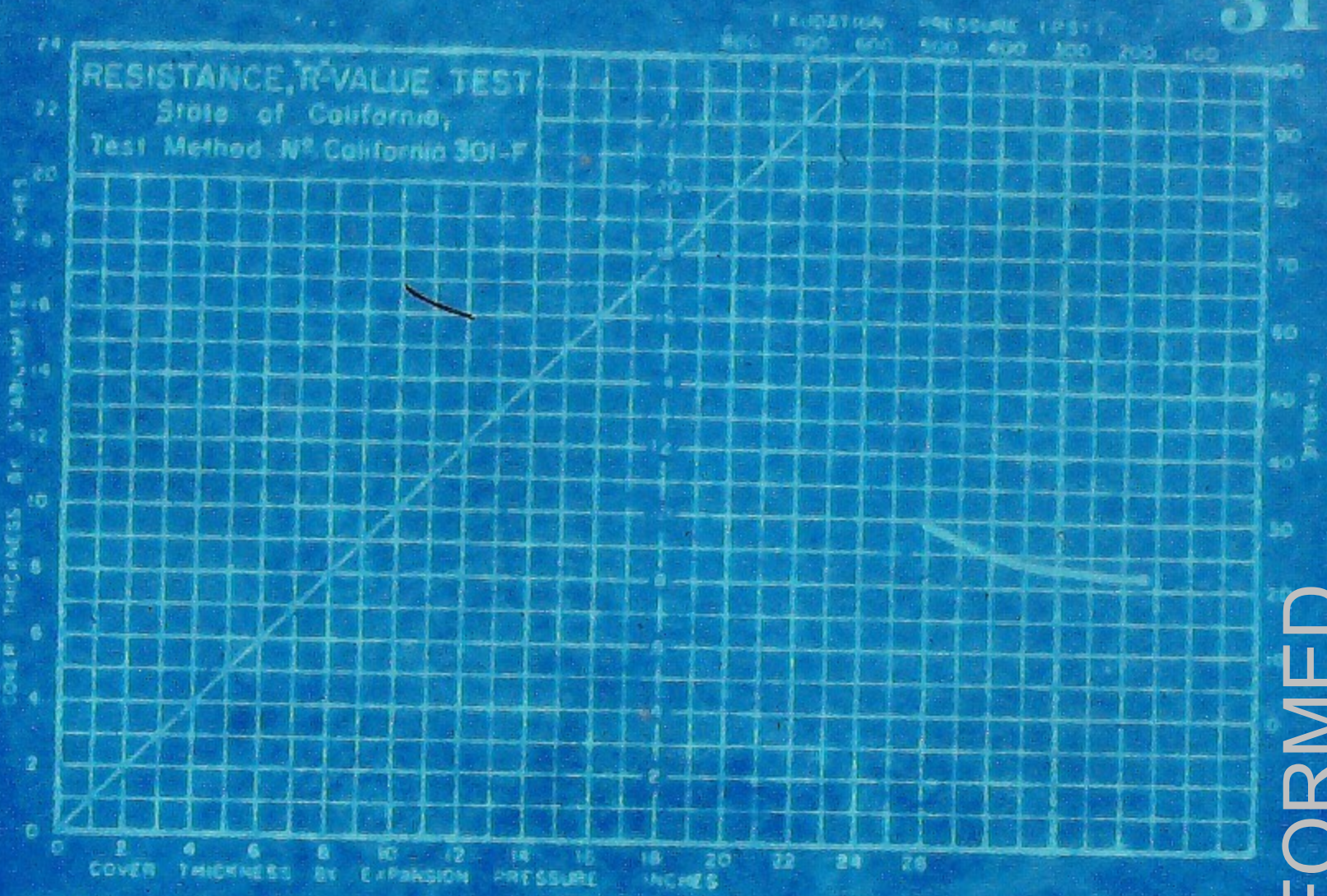

Sample: Pt. VI at 3' to 4'

Description: Tan silty clay.

Specimen	A	B	C
Exudation Pressure p.s.i.	255	350	470
Expansion dial (.0001")	35	40	50
Expansion Pressure p.s.f.	151	173	216
Resistance Value, "R"	22	24	28
% Moisture at Test	21.9	21.0	20.1
Dry Density at Test p.c.f.	104.0	104.8	106.3
"R" Value at 300 p.s.i. Exudation Pressure	= (23)		

CONFORMED

Lab. No. 11708
February 4, 1972
Job No. 23-238-70

3151

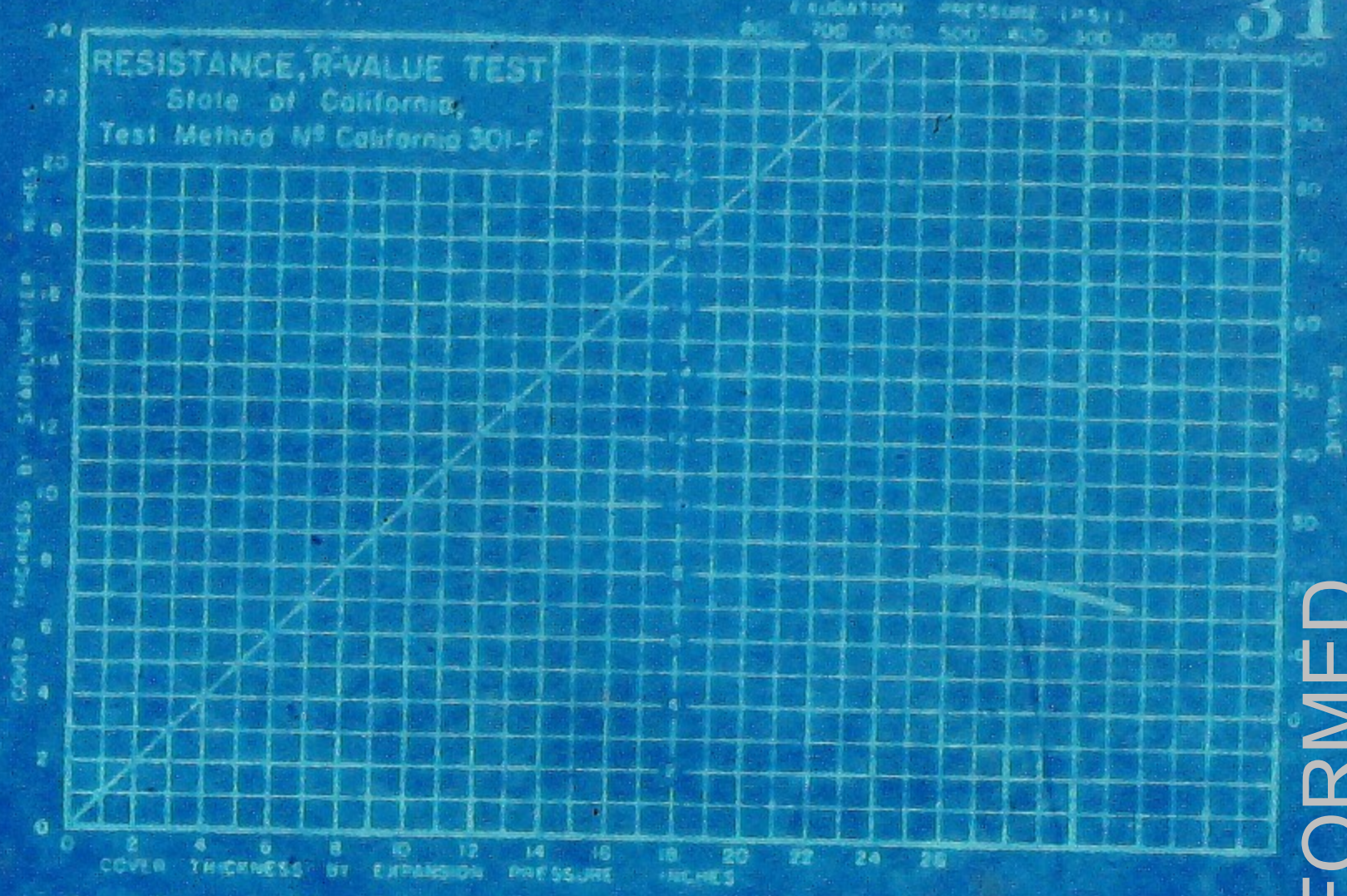

Sample: Pt. VIII at 3' to 4'

Description: Tan silty clay.

Specimen	A	B	C
Exudation Pressure, p.s.i.	271	310	462
Expansion dial (.0001")	0	10	15
Expansion Pressure, p.s.f.	0	43	66
Resistance Value, "R"	18	19	20
% Moisture at Test	20.2	19.4	18.5
Dry Density at Test, p.c.f.	102.5	105.7	107.0
"R" Value at 300 p.s.i. Exudation Pressure	= (19)		

CONFORMED

File No. 14,248-M1
Lab. No. 11708
February 4, 1972
Job No. 23-238-70

3151

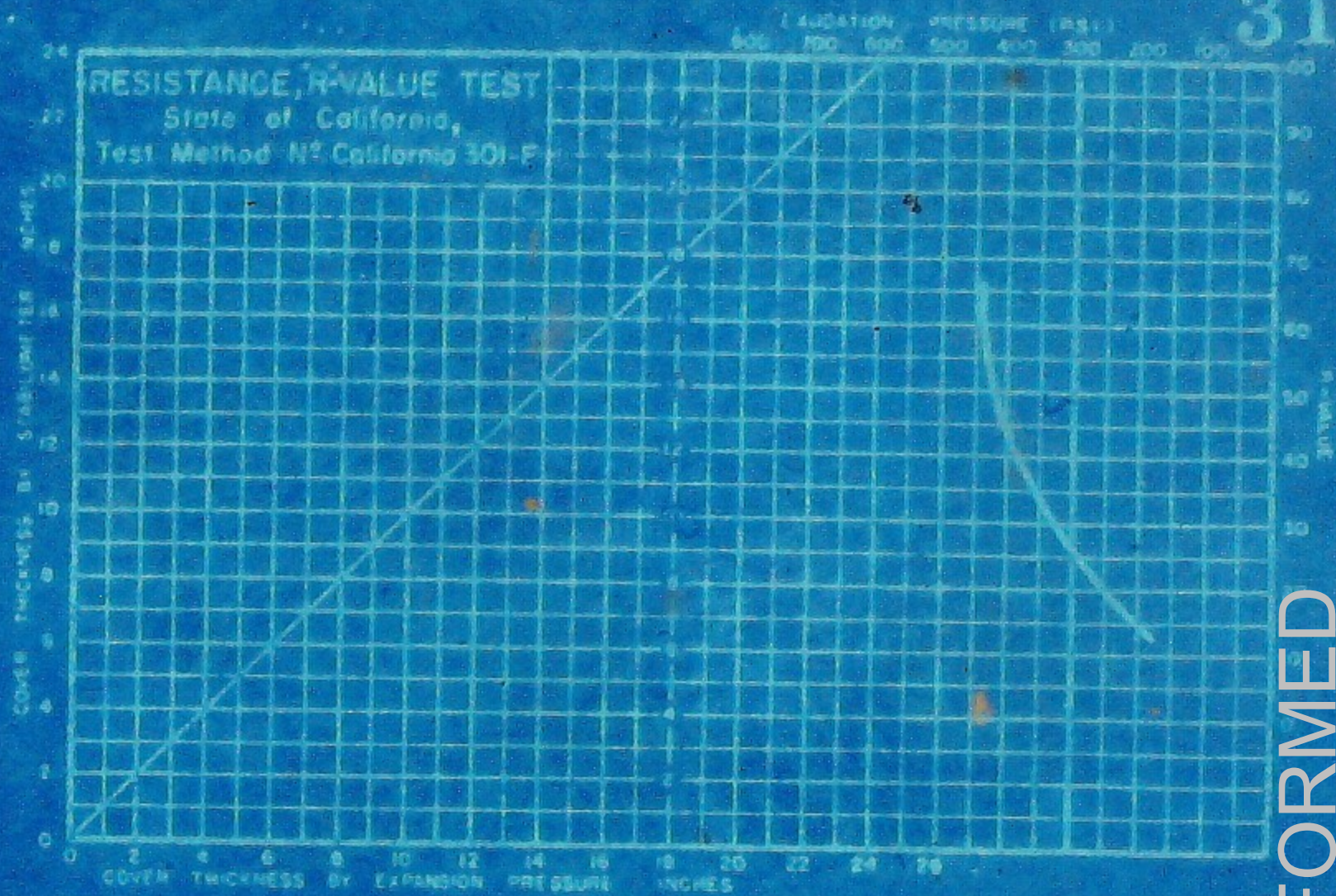

Sample: FT X at 3.0' to 3.5'

Description: Tan silty clay.

Specimen	A	B	C
Exudation Pressure,p.s.i.	199	358	446
Expansion dial (.0001")	0	10	30
Expansion Pressure,p.s.f.	0	43	130
Resistance Value, "R"	14	36	59
% Moisture at Test	17.7	15.5	14.2
Dry Density at Test,p.c.f.	109.3	112.2	116.0
"R" Value at 300 p.s.i. Exudation Pressure	= (27)		

CONFORMED

File No. [illegible]
Lab. No. 11708
February 4, 1972
Job No. 23-238-70

3151

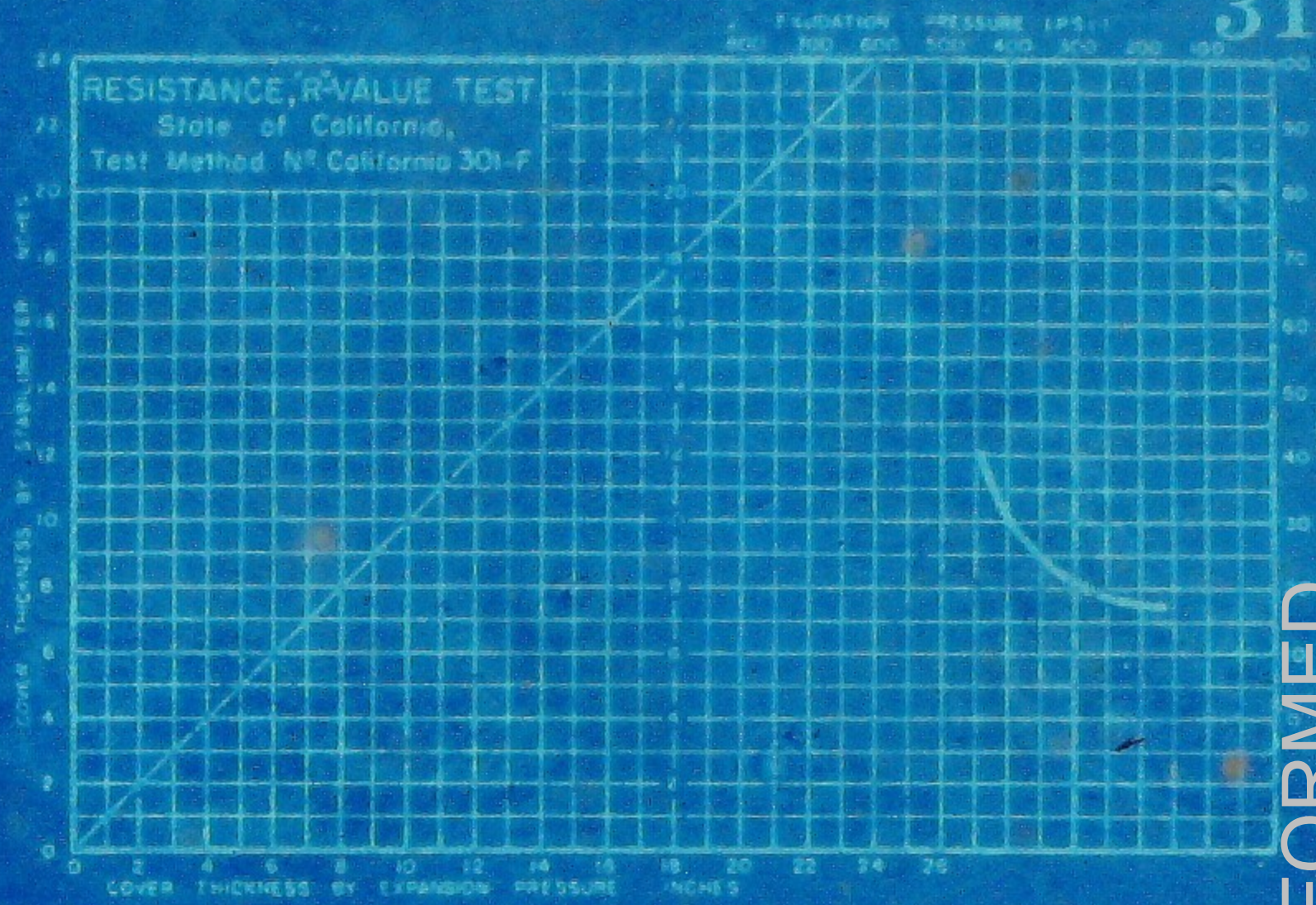

Sample: Pt. XII at 3.0' to 3.5'

Description: Brown silty clay with some gravel.

Specimen	A	B	C
Exudation Pressure p.s.i.	191	302	438
Expansion dial (.0001")	0	3	7
Expansion Pressure p.s.i.	0	13	30
Resistance Value, "R"	18	21	37
% Moisture at Test	15.9	15.1	14.2
Dry Density at Test p.c.f.	113.0	113.2	116.9
"R" Value at 300 p.s.i. Exudation Pressure	= (21)		

CONFORMED

File No. 78328-ML
Lab. No. 11706
February 4, 1972
Job No. 23-233-70

3151

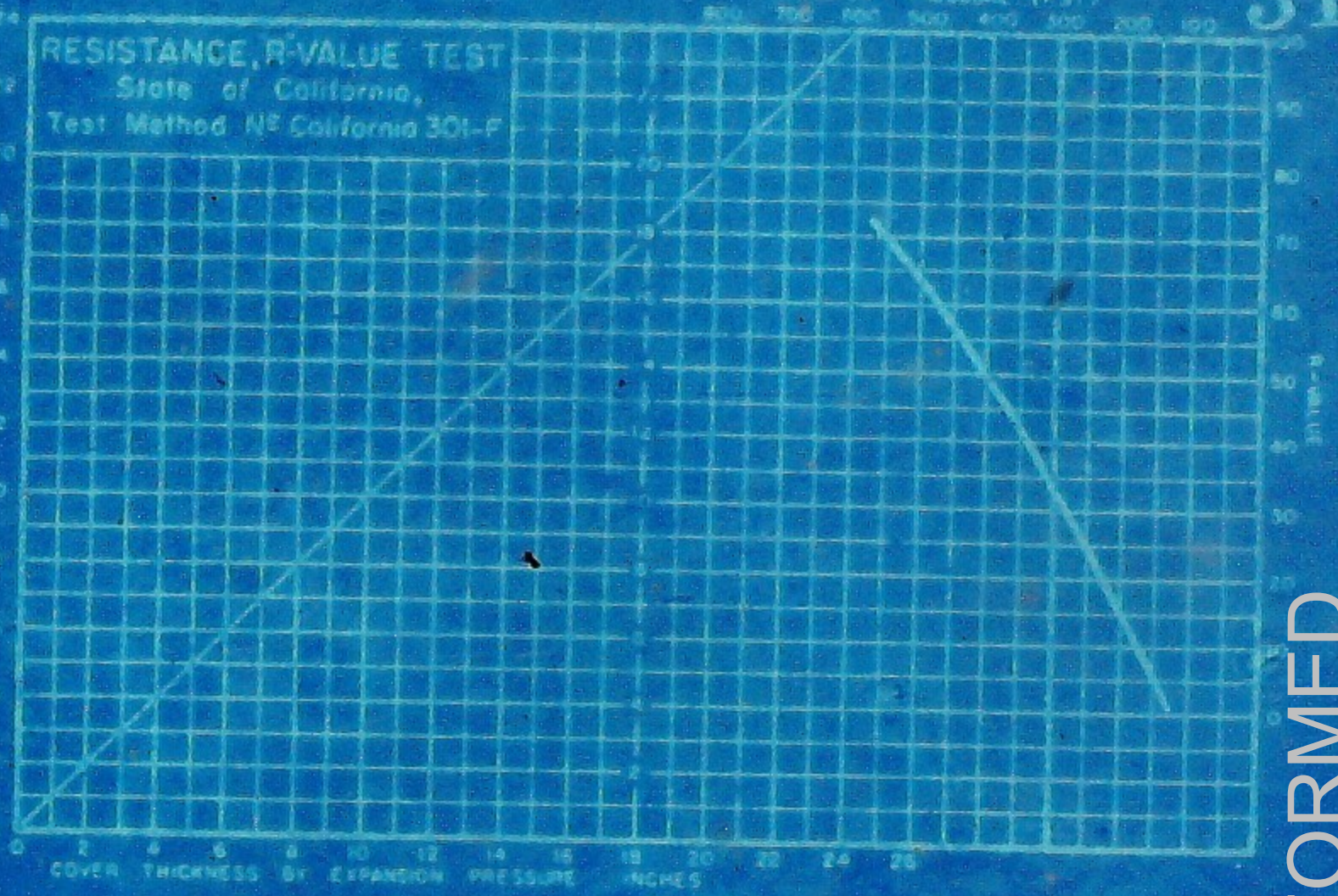

Sample: Pt. XIII at 3.0' to 5.0'

Description: Tan silty clay with some gravel.

Specimen	A	B	C
Exudation Pressure, p.s.i.	159	319	542
Expansion dial (.0001")	0	4	10
Expansion Pressure, p.s.f.	0	17	43
Resistance Value, "R"	8	37	69
% Moisture at Test	13.2	11.5	10.7
Dry Density at Test, p.c.f.	119.0	123.0	126.0
"R" Value at 300 p.s.i. Exudation Pressure	= (34)		

CONFORMED

File No. T8326-M1
Lab. No. 11706
February 4, 1972
Job No. 23-118-70

3151

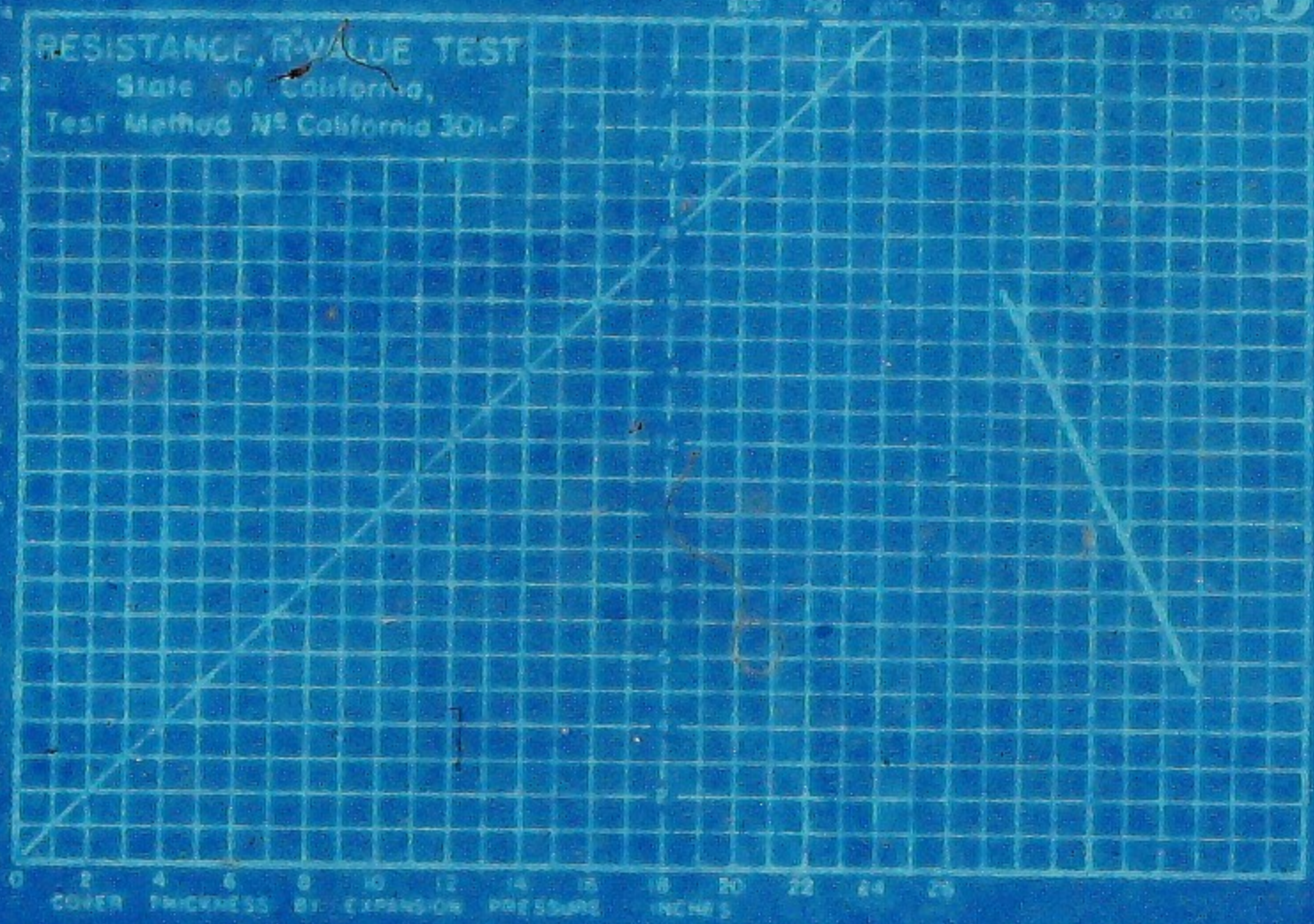

Sample: Pt. XV at 3.0' to 3.5'

Description: Silty clay with some sand.

Specimen	A	B	C
Exudation Pressure, p.s.i.	183	342	422
Expansion dial (.0001")	0	4	10
Expansion Pressure, p.s.f.	0	17	43
Resistance Value, "R"	12	44	60
% Moisture at Test	11.8	11.0	10.1
Dry Density at Test, p.c.f.	123.7	126.5	127.4
"R" Value at 300 p.s.i. Exudation Pressure	= (35)		

CONFORMED

File No: T8328-NH
Lab. No. 11706
February 4, 1972
Job No. 23-238-70

3151

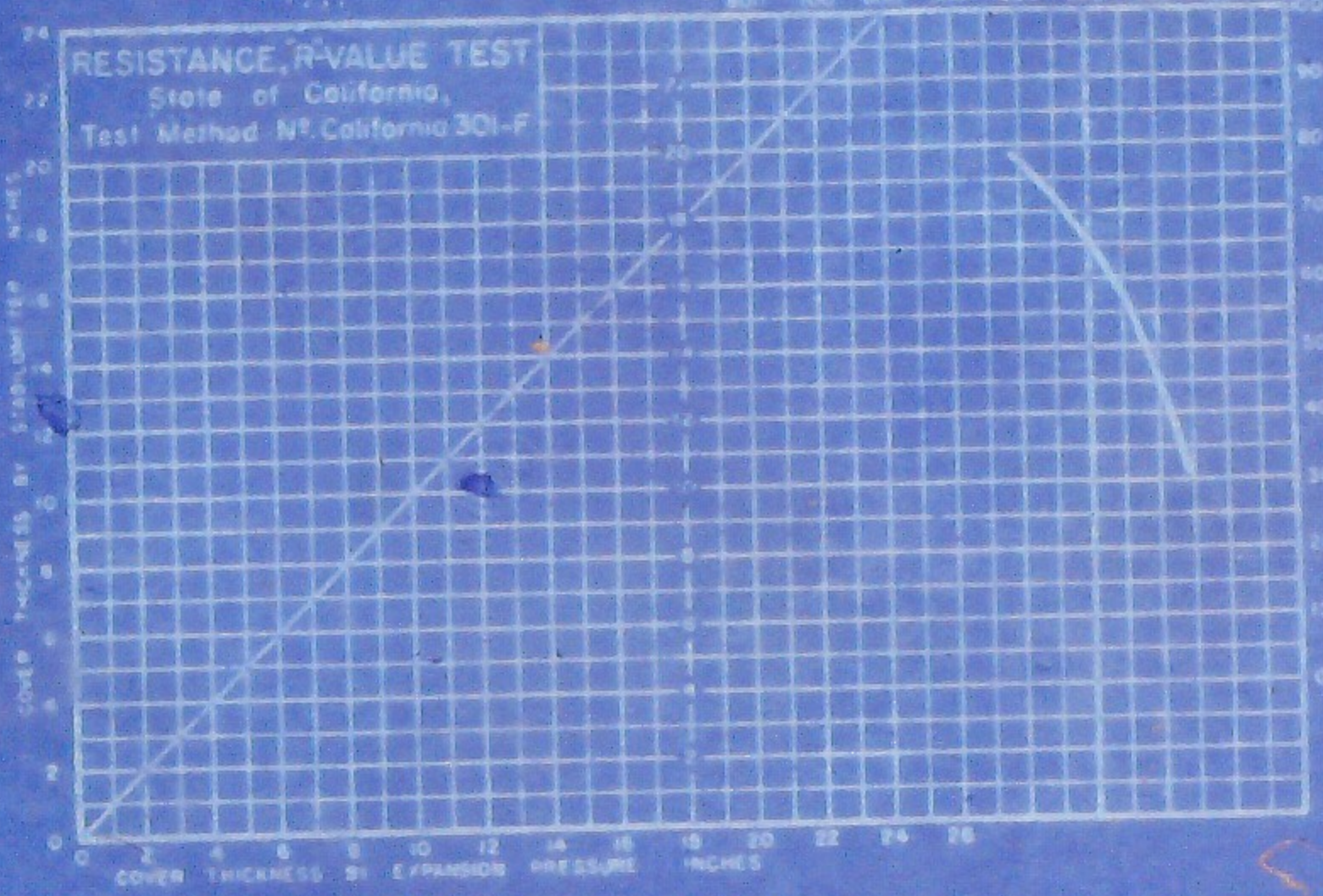

Sample: Pt. XVI at 3.0'

Description: Tan sandy silt.

Specimen	A	B	C
Exudation Pressure, p.s.i.	175	279	398
Expansion dial (.0001")	4	15	65
Expansion Pressure, p.s.f.	17	65	282
Resistance Value, "R"	38	63	77
% Moisture at Test	17.0	15.7	14.8
Dry Density at Test, p.c.f.	111.5	113.0	114.5
"R" Value at 300 p.s.i. Exudation Pressure	= (66)		

CONFORMED

Job No. 23-238-70

LOGS OF TEST PITS

TEST PIT NO.	DEPTH (feet)	DESCRIPTION
TP-1	0 to 1'-8"	Dark brown to black clay, high plasticity, moist.
	1'-8" to 2'-3"	Light greyish tan sandy silt, damp.
	2'-3" to 4'-0"	Grading moist to very moist.
TP-2	0 to 3'-0"	Dark brown clay, high plasticity, damp to moist
	3'-0" to 4'-0"	Light tan clay, damp.
TP-3	0 to 1'-0"	Black clay, high plasticity, very moist to wet.
	1'-0" to 2'-6"	Grading drier.
	2'-6" to 4'-0"	Light tan clay, high plasticity, very moist.
TP-4	0 to 1'-6"	Black clay, high plasticity, very moist to wet.
	1'-6" to 2'-6"	Grading drier.
	2'-6" to 4'-0"	Light tan silty clay, moderate cohesion.
TP-5	0 to 1'-6"	Black clay, high plasticity, very moist.
	1'-6" to 2'-6"	Grading drier.
	2'-6" to 3'-6"	Light tan silty clay, low plasticity, slightly damp.
TP-6	0 to 2'-6"	Black clay, high plasticity, very moist to wet.
	2'-6" to 4'-0"	Tan silty clay, low to moderate plasticity, slightly damp.
TP-7	0 to 2'-0"	Black clay, high plasticity, moist.
	2'-0" to 3'-0"	Light tan silty clay, low plasticity, slightly damp.
TP-8	0 to 2'-6"	Black clay, high plasticity, moist.
	2'-6" to 4'-0"	Tan silty clay, low plasticity, slightly damp.

CONFORMED

Job No. 23-238-70

LOGS OF TEST PITS (continued)

TEST PIT NO.	DEPTH (feet)	DESCRIPTION
TP-9	0 to 2'-0"	Black clay, high plasticity, damp.
	2'-0" to 3'-6"	Tan silty clay, low plasticity, dry to slightly damp.
TP-10	0 to 2'-0"	Black clay, high plasticity, damp.
	2'-0" to 3'-6"	Tan silty clay, low plasticity, dry to slightly damp.
TP-11	0 to 2'-2"	Dark brown to black clay, high plasticity, damp.
	2'-2" to 3'-6"	Tan silty clay, low plasticity slightly damp.
TP-12	0 to 2'-0"	Black clay, high plasticity, damp to moist.
	2'-0" to 3'-6"	Tan silty clay with occasional fine gravel, dry to slightly damp
TP-13	0 to 2'-0"	Dark brown to black clay, high plasticity, moist.
	2'-0" to 3'-0"	Tan silty clay, slightly damp.
	3'-0" to 5'-0"	Tan silty clay with occasional fine gravel, dry to slightly damp
TP-14	0 to 1'-6"	Dark brown clay, high plasticity, moist.
	1'-6" to 3'-6"	Tan silty clay with occasional coarse sand to fine gravel, slightly damp.
TP-15	0 to 2'-0"	Black clay, high plasticity, moist.
	2'-0" to 3'-6"	Tan silty clay with occasional coarse sand to fine gravel, slightly damp.
TP-16	0 to 2'-6"	Black clay, high plasticity, moist.
	2'-6" to 3'-0"	Tan sandy silt, slightly damp.

CONFORMED

Appendix H

As-built Plans

Los Coches Street Bridge

CONFORMED

DIST.	COUNTY	ROUTE	POST MILES—TOTAL PROJECT	SHEET NO.	TOTAL SHEETS
04	SCl, Ala	680	M.7.2 / R6.8	254	363

BRIDGE ENGINEER — REGISTERED CIVIL ENGINEER NO. 8463

DATE APPROVED April 22, 1968

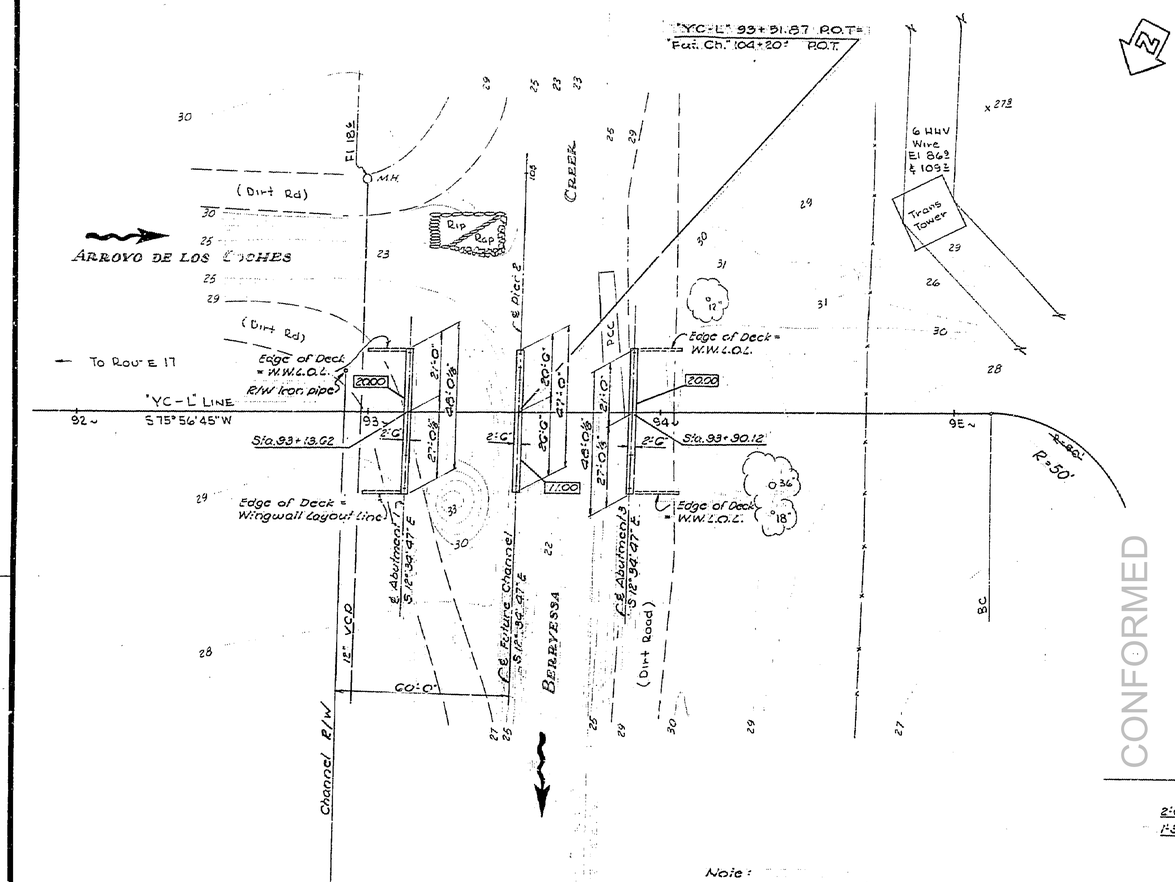

POT 16
Fd-1P in Man well at
℄ Dempsey & Calaveras Rd
Elev 42.130

TBM "A"
Set-top ginny 25' Lt
"YC-L" 93 ~
Elev 30.25

Note:

+ Indicates piles.

▭ Indicates bottom of footing elevations.

General Notes (Highway Structures)

Design: A.A.S.H.O. dated 1961 with revisions and as supplemented by Bridge Planning and Design Manual.

Live Loading: HS 20-44 and Alternative

Reinforced Concrete: F_s = 20,000 p.s.i., N = 10
F_c = 1,200 p.s.i.

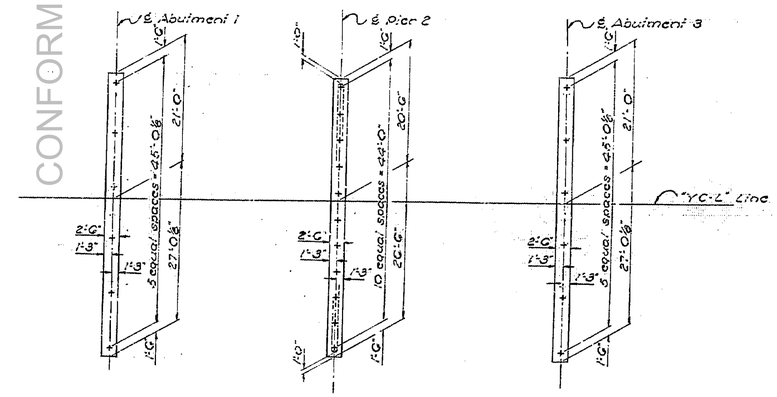

PILE LAYOUT
1" = 10'

PR-37C 57-1

SCALE 1" = 20'
LEVEL DATUM: USC & GS, MSL
FOR ALIGNMENT TIES SEE PR-37C57-3
CONTOURS AS OF 6-6-66
SITE PLAN TO SUPPLEMENT DISTRICT DATA.
SURVEY BY LHE DATE 6-6-66
DRAWN BY LHE DATE 7-7-66
TRACED BY JS DATE 7-7-66

AS BUILT
CORRECTIONS BY R. Ogata - M.G.
CONTRACT NO. 04-119504
DATE 11-9-70 / 4-8-71

AS BUILT PLANS
Contract No. 04-119504
Date Completed
Document No. 4/0003891

BRIDGE DEPARTMENT
DESIGN SECTION
Section Supervisor H. L. Gongola

DESIGN	By J. Clausen	7/67
	Checked C. W. Craig Jr.	9/67
DETAILS	By J. Clausen	7/67
	Checked C. W. Craig Jr.	9/67
QUANTITIES	By Joe Aguirre	12/67
	Checked K. Chang	12/67

STATE OF CALIFORNIA
HIGHWAY TRANSPORTATION AGENCY
DEPARTMENT OF PUBLIC WORKS
DIVISION OF HIGHWAYS

BERRYESSA CREEK BRIDGE

FOUNDATION PLAN

BRIDGE NO.	POST MILE	DRAWING NO.	SHEET	OF
37C-57		S 7C 57-2	2	5

REVISION DATES (PRELIMINARY STAGE ONLY)

Disregard prints bearing earlier revision dates

E-37

WO
CU

254

I HEREBY CERTIFY THAT THIS IS A TRUE AND ACCURATE COPY OF THE ABOVE DOCUMENT TAKEN UNDER MY DIRECTION AND CONTROL ON THIS DATE IN SACRAMENTO, CALIFORNIA PURSUANT TO AUTHORIZATION BY THE DIRECTOR OF PUBLIC WORKS.

DATE 4/13/71 SIGNATURE [illegible] TITLE [illegible]

CONFORMED

MICROFILM - STATE OF CALIFORNIA - DEPARTMENT OF PUBLIC WORKS - MICROFILM

ClibPDF - www.fastio.com

Revised Footing Note, Title Bar, & the Seismic Load Loading 10 Apr 68 EJS

Changed 1'-0" in Sec "AA" to 1'-3" JRJ 6-15-66

Deleted "Wingwall Elev" Revised Fillet on Part Plan-Part", #6 Bars in "Sec A-A", Reinforcing in "Sec F-F", Title Block 3 Jan 66 EJS

DIST	COUNTY	ROUTE	POST MILES-TOTAL PROJECT	SHEET NO.	TOTAL SHEETS
04	SCl Alz	680	M 7.2/R6.8	255	363

Bridge Engineer — Civil Engineer — Locale Engr

Date Approved April 22, 1968

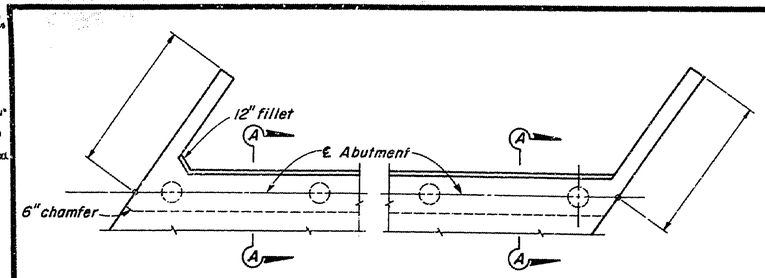

PART PLAN-ABUTMENT
With Skew

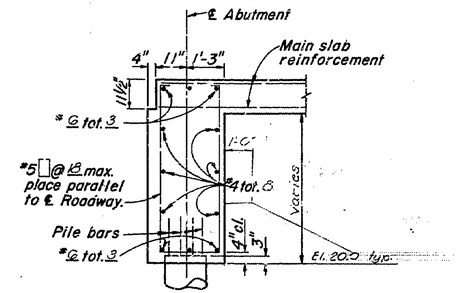

SECTION A-A

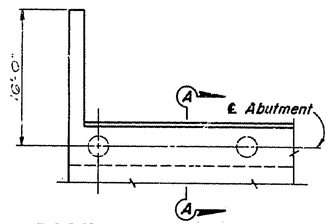

PART PLAN-ABUTMENT
No Skew

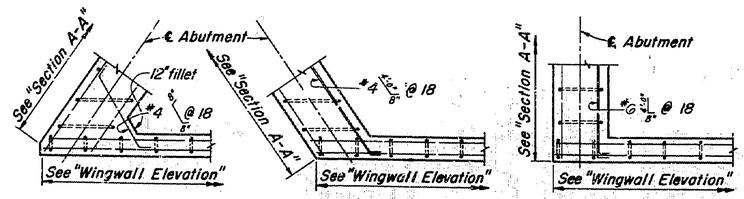

SECTIONS F-F
With Skew — No Skew

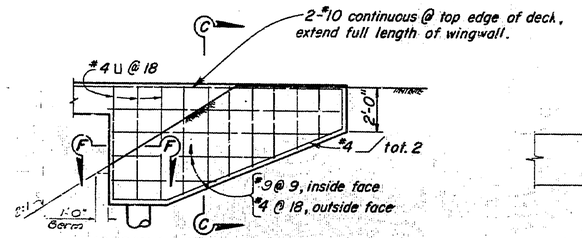

WINGWALL ELEVATION
Curb and Railing not shown

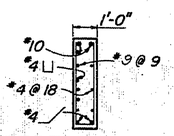

SECTION C-C

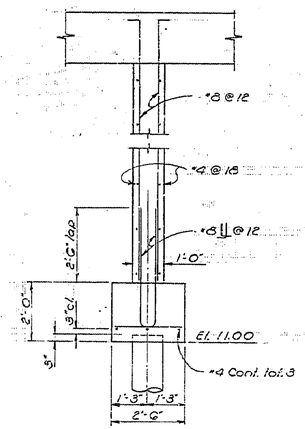

SECTION THRU PIER
½" = 1'-0"

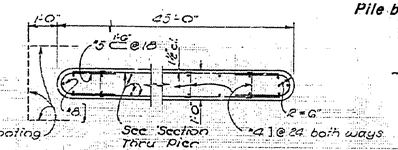

SECTION THRU PIER STEM
½" = 1'-0"

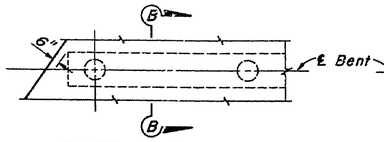

PART PLAN-BENT
With Skew

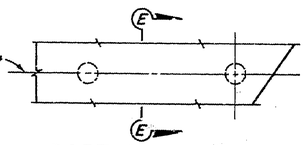

PART PLAN-BENT
With Skew

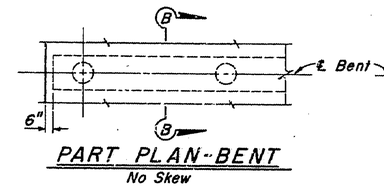

PART PLAN-BENT
No Skew

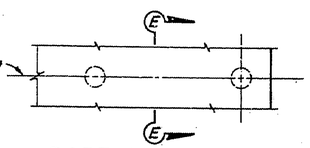

PART PLAN-BENT
No Skew

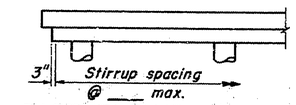

PART ELEVATION-BENT

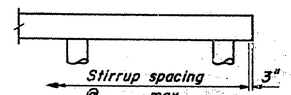

PART ELEVATION-BENT

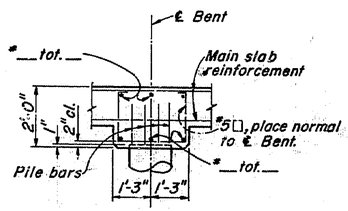

SECTION B-B

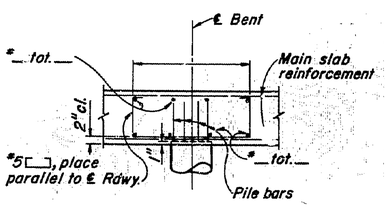

SECTION E-E

No As Built Changes
AS BUILT
CORRECTIONS BY R. Ogata - M.G.
CONTRACT NO. 04-119504
DATE 11-9-70/4-8-71

AS BUILT PLANS
Contract No. 04-119504
Date Completed
Document No. 4/0003891

LIVE LOADING: HS 20-44 & ALTERNATIVE

STANDARD DRAWING
Submitted by: Bridge Engineer
Design Engineer: Bridge Engineer
Approved Recommendation: Bridge Engineer
Date Approved: 1-7-66
Date Issued: 1-7-66
Date Issued: 6-1-66

1/66 — STATE OF CALIFORNIA TRANSPORTATION AGENCY DEPARTMENT OF PUBLIC WORKS DIVISION OF HIGHWAYS — XS-12-37

BERRYESSA CREEK BRIDGE

ABUTMENT AND PIER DETAILS

BRIDGE NO.	POST MILE	DRAWING NO.	SHEET	OF
37C-57		37C57-3	3	5

REVISION DATES (PRELIMINARY STAGE ONLY)
Disregard prints bearing earlier revision dates
2/24/61 3/1/62 1/15/66

255

CONFORMED

I HEREBY CERTIFY THAT THIS IS A TRUE AND ACCURATE COPY OF THE ABOVE DOCUMENT TAKEN UNDER MY DIRECTION AND CONTROL ON THIS DATE IN SACRAMENTO, CALIFORNIA PURSUANT TO AUTHORIZATION BY THE DIRECTOR OF PUBLIC WORKS.

DATE 4/1/71 SIGNATURE [illegible] TITLE [illegible]

MICROFILM - STATE OF CALIFORNIA - DEPARTMENT OF PUBLIC WORKS - MICROFILM

ClibPDF - www.fastio.com

DIST.	COUNTY	ROUTE	POST MILES—TOTAL PROJECT	SHEET No.	TOTAL SHEETS
04	SCl/Ala	680	M 12.1/R6.8	257	363

DESIGN ENGINEER REGISTERED CIVIL ENGINEER NO. 9583

DATE APPROVED April 22, 1968

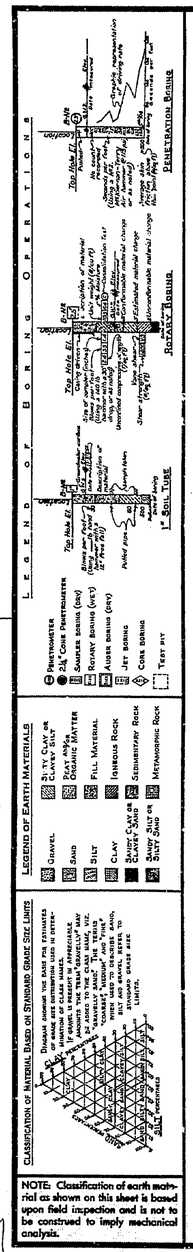

FIELD STUDY		
DRAWN	W. R. Fox	JAN-15-67
CHECKED	W. R. Fox	JAN-15-67
CHECKED	W. A. Mooney	12-20-67

Approval Recommended: Engineering Geologist

BRIDGE DEPARTMENT
ENGINEERING GEOLOGY SECTION

257

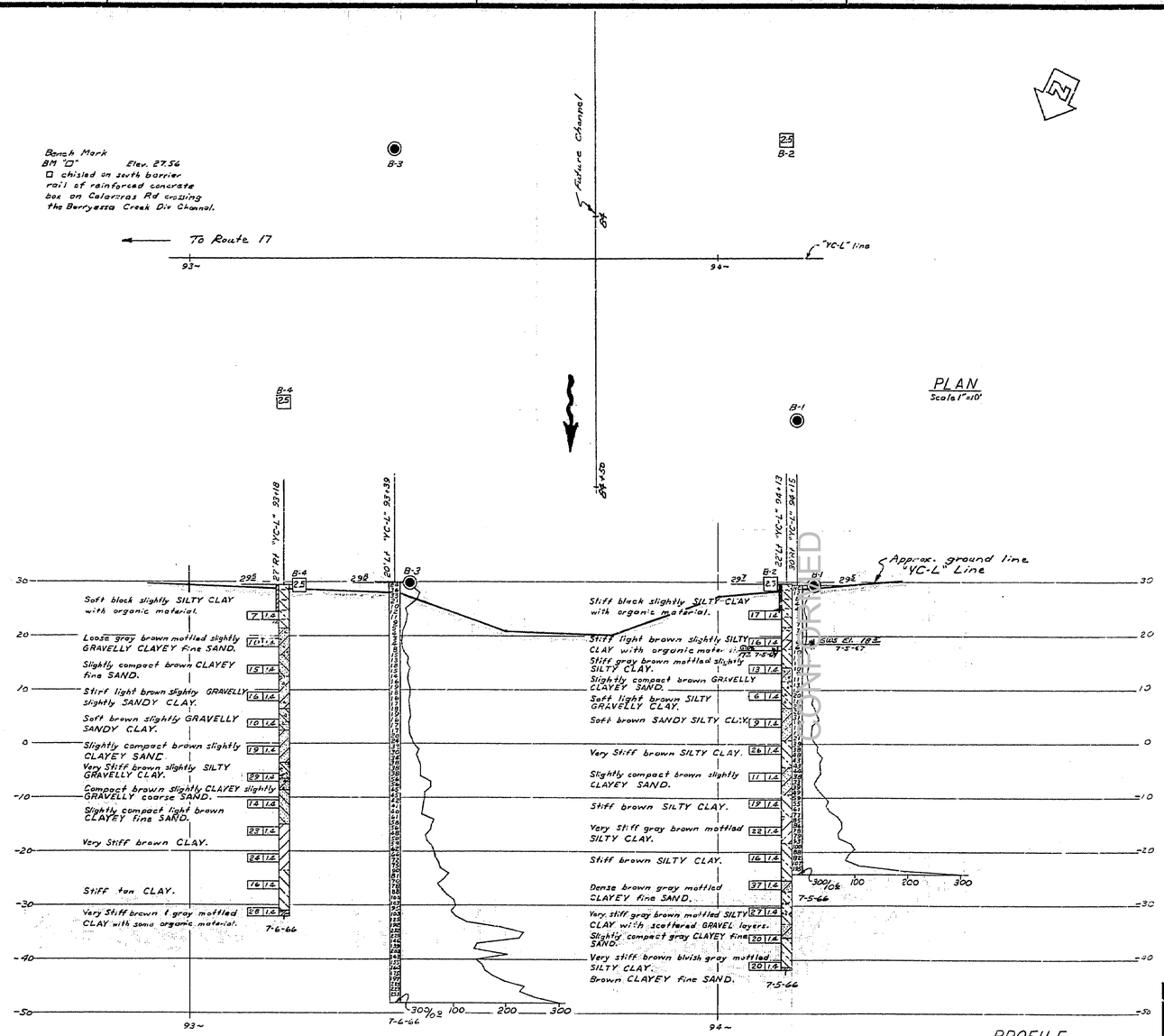

INFORMATION ON ACTUAL FOUNDATION CONDITIONS ENCOUNTERED IS ON FILE IN BRIDGE GEOLOGY SECTION

AS BUILT PLANS
Contract No. 04-119504
Date Completed
Document No. 41003891

STATE OF CALIFORNIA
TRANSPORTATION AGENCY
DEPARTMENT OF PUBLIC WORKS
DIVISION OF HIGHWAYS

BERRYESSA CREEK

LOG OF TEST BORINGS

BRIDGE NO.	POST MILE	DRAWING NO.	SHEET	OF
37C-57		37C57-5	5	5

REVISION DATES (PRELIMINARY STAGE ONLY)

10/12/67

WO 119503
CU 04204

PR-37C57-2
Disregard prints bearing earlier revision dates

I HEREBY CERTIFY THAT THIS IS A TRUE AND ACCURATE COPY OF THE ABOVE DOCUMENT TAKEN UNDER MY DIRECTION AND CONTROL ON THIS DATE IN SACRAMENTO, CALIFORNIA PURSUANT TO AUTHORIZATION BY THE DIRECTOR OF PUBLIC WORKS.

DATE 4/13/2011 SIGNATURE [illegible] TITLE [illegible]

MICROFILM - STATE OF CALIFORNIA - DEPARTMENT OF PUBLIC WORKS - MICROFILM
SCALE 1"=50' SCALE 1"=20' SCALE 1"=10' or 1"=100' SCALE 1"=40'

ClibPDF - www.fastio.com

DIST.	COUNTY	ROUTE	POST MILES—TOTAL PROJECT	SHEET NO.	TOTAL SHEETS
04	SCl, Ala	680	M 7.2 / R6.8	253	369

BRIDGE ENGINEER — REGISTERED CIVIL ENGINEER NUMBER 5595

ASSISTANT STATE HIGHWAY ENGINEER — REGISTERED CIVIL ENGINEER NUMBER 5390

DATE APPROVED April 22, 1968

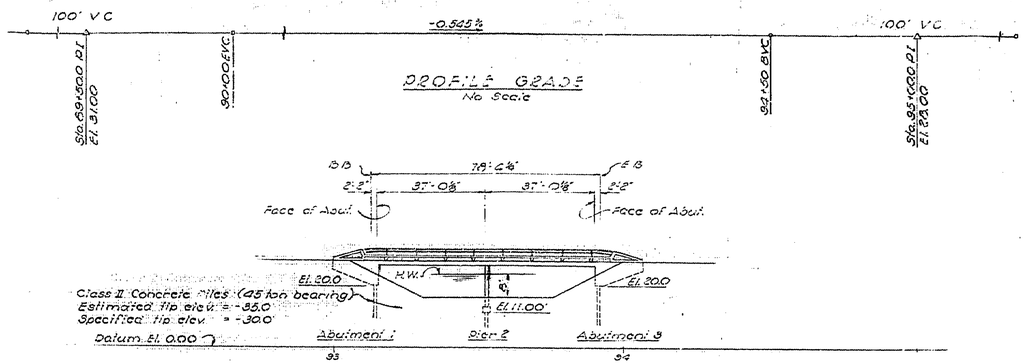

Note All piles driven to Specified tip exactly

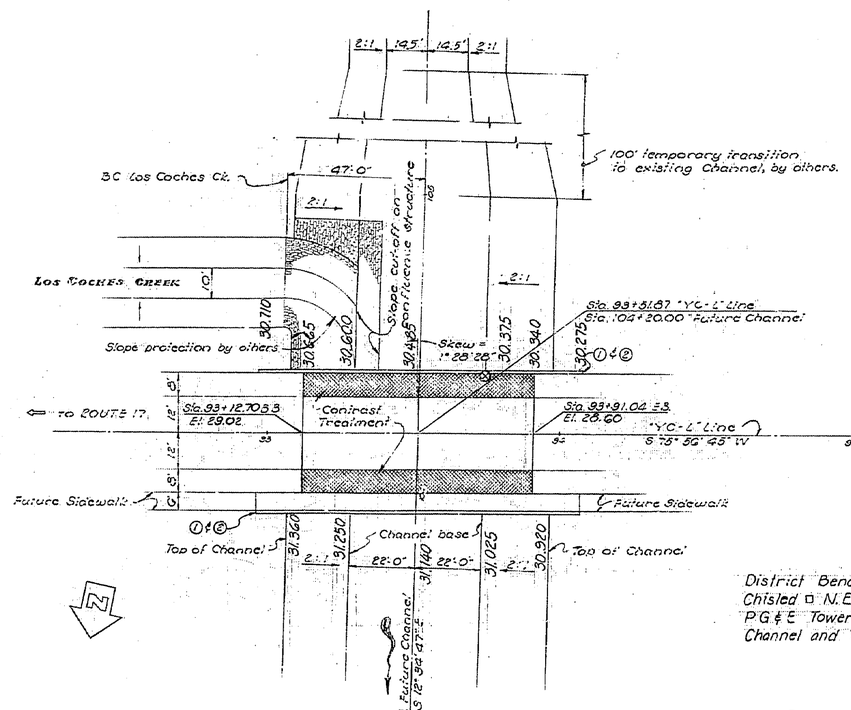

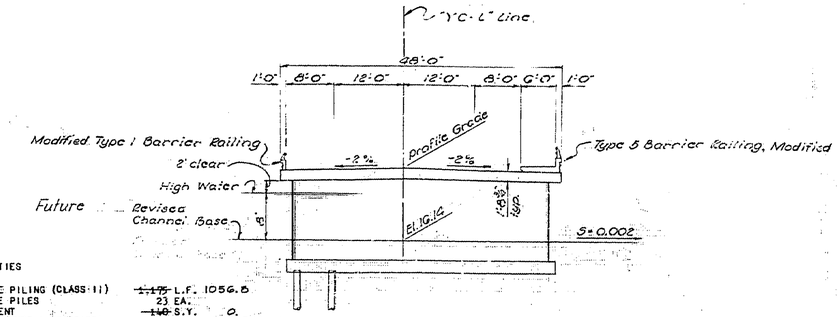

APPROXIMATE QUANTITIES

FURNISH CONCRETE PILING (CLASS II)	~~1,175~~ L.F.	1056.5
DRIVING CONCRETE PILES	23 EA.	
CONTRAST TREATMENT	~~140~~ S.Y.	0.
BARRIER RAILING (TYPE 1 MODIFIED)	~~110~~ L.F.	108.5
BARRIER RAILING (TYPE 5 MODIFIED)(6')	~~110~~ L.F.	108.4

FINAL QUANTITIES

STRUCTURE EXCAVATION (BRIDGE)	140 C.Y.
STRUCTURE BACKFILL (BRIDGE)	85 C.Y.
CLASS A CONCRETE (BRIDGE)	350 C.Y.
BAR REINFORCING STEEL (BRIDGE)	64,000 LBS.

Note: All tooled concrete surfaces stained Red Brown

INDEX TO PLANS

Sheet No.	Title
1	General Plan
2	Foundation Plan
3	Abutment and Pier Details
4	Slab Details - 2 Spans
5	Log of Test Boring

The following sheets to be found in the "STANDARD PLANS" book dated 1968:

B2-1	Concrete Pile Details 45T
B11-0	Barrier Railing Types 1, 4 & 5
B11-1	Barrier Railing Types 1, 4 & 5
B11-2	Barrier Railing Details

See Calaveras Road Undercrossing -37-302 for the following structure detail sheets:

- A1 Modified Barrier Railing Details -S
- A2 Modified Barrier Railing Details -A
- A3 Bridge Approach Guard Railing - Layout
- A4 Modified Bridge Approach Guard Railing
- A5 Barrier Railing Details -Steel Post
- A6 Type 1 Slope Paving Details

AS BUILT PLANS
Contract No. 04-119504
Date Completed
Document No. 4 00023891

AS BUILT
CORRECTIONS BY D.J. Patterson - M.G.
CONTRACT NO. 04-119504
DATE 11-9-70 / 4-8-71

District Bench Mark
Chisled □ N.E. Corner of N.E. PCC Base
P.G.&E. Tower in S.W. Quad of Berryessa
Channel and YC-L Line. Elev. 29.255

The future channel had not been construct at Contract end. Vertical clearance was not measured.

① Point No. of Bridge & Year constructed.
② Point Name of Bridge
⊗ Point of min. vertical clearance

FOR GENERAL NOTES SEE "Foundation Plan & Grid Grades"

LIVE LOADING H30-44 AND ALTERNATIVE

BRIDGE DEPARTMENT
*** DESIGN SECTION *** 6

Section Supervisor H. J. Pr
Project Designer L.H. Goldwell

DESIGN	by J. Oliveira 7/67	Checked C.W. Bragh 9/67	
DETAILS	by J. Oliveira 7/67	Checked C.W. Bragh 9/67	
LAYOUT	by J. Oliveira 7/67	Checked C.W. Bragh 9/67	
QUANTITIES	by L. Johnson 10/67	Checked R.	
SPECIFICATIONS	by L. Bailey 1968	Plans and Specs. Compared	

Approval Recommended by — Approved: Chief, Div. Bridge Design, Licensed No. 17348

STATE OF CALIFORNIA
TRANSPORTATION AGENCY
DEPARTMENT OF PUBLIC WORKS
DIVISION OF HIGHWAYS

BERRYESSA CREEK BRIDGE

LOCATED .5 MI. S. OF CALAVERAS RD. AND .2 MI. S. OF JACKLIN ROAD IN THE CITY OF MILPITAS IN SANTA CLARA COUNTY.

GENERAL PLAN

BRIDGE NO.	POST MILE	DRAWING NO.	SHEET	OF
37C-57		37C57-1	1	5

WO 119501
CU 04 204

Disregard prints bearing earlier revision dates

REVISION DATES (PRELIMINARY STAGE ONLY)

253

I HEREBY CERTIFY THAT THIS IS A TRUE AND ACCURATE COPY OF THE ABOVE DOCUMENT TAKEN UNDER MY DIRECTION AND CONTROL ON THIS DATE IN SACRAMENTO, CALIFORNIA PURSUANT TO AUTHORIZATION BY THE DIRECTOR OF PUBLIC WORKS.

DATE 4/19/71 SIGNATURE [illegible] TITLE [illegible]

MICROFILM - STATE OF CALIFORNIA - DEPARTMENT OF PUBLIC WORKS - MICROFILM

ClibPDF - www.fastio.com

DIST.	COUNTY	ROUTE	POST MILES—TOTAL PROJECT	SHEET No.	TOTAL SHEETS
04	SCl, Ala	680	M 7.2 / R6.8	253	363

BRIDGE ENGINEER — REGISTERED CIVIL ENGINEER NUMBER 5560

ASSISTANT STATE HIGHWAY ENGINEER — REGISTERED CIVIL ENGINEER NUMBER 5390

DATE APPROVED April 22, 1968

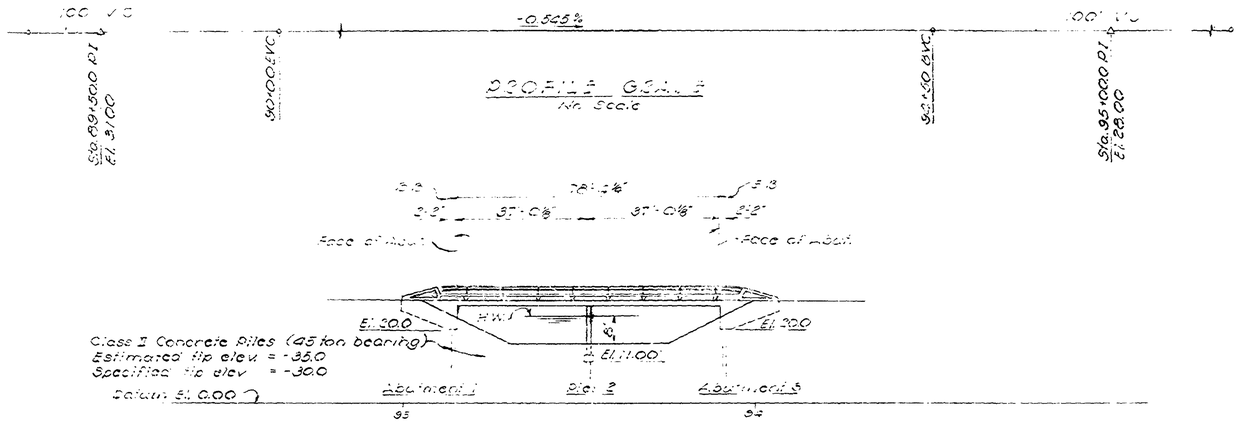

Note: All piles driven to Specified tip exactly

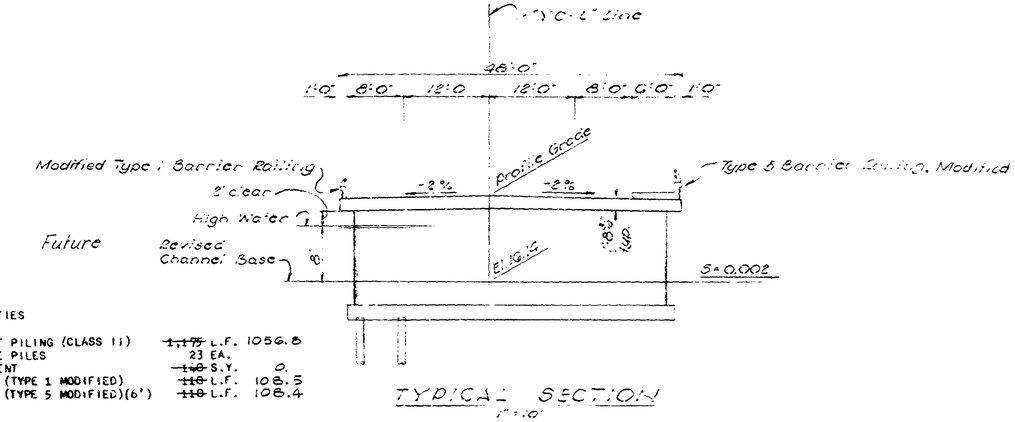

APPROXIMATE QUANTITIES

FURNISH CONCRETE PILING (CLASS II)	~~1,175~~ L.F.	1056.8
DRIVING CONCRETE PILES	23 EA.	
CONTRAST TREATMENT	~~140~~ S.Y.	0.
BARRIER RAILING (TYPE 1 MODIFIED)	~~110~~ L.F.	108.5
BARRIER RAILING (TYPE 5 MODIFIED)(6')	~~110~~ L.F.	108.4

FINAL QUANTITIES

STRUCTURE EXCAVATION (BRIDGE)	140 C.Y.
STRUCTURE BACKFILL (BRIDGE)	85 C.Y.
CLASS A CONCRETE (BRIDGE)	350 C.Y.
BAR REINFORCING STEEL (BRIDGE)	64,000 LBS.

Note: All tooled concrete surfaces stained Red Brown

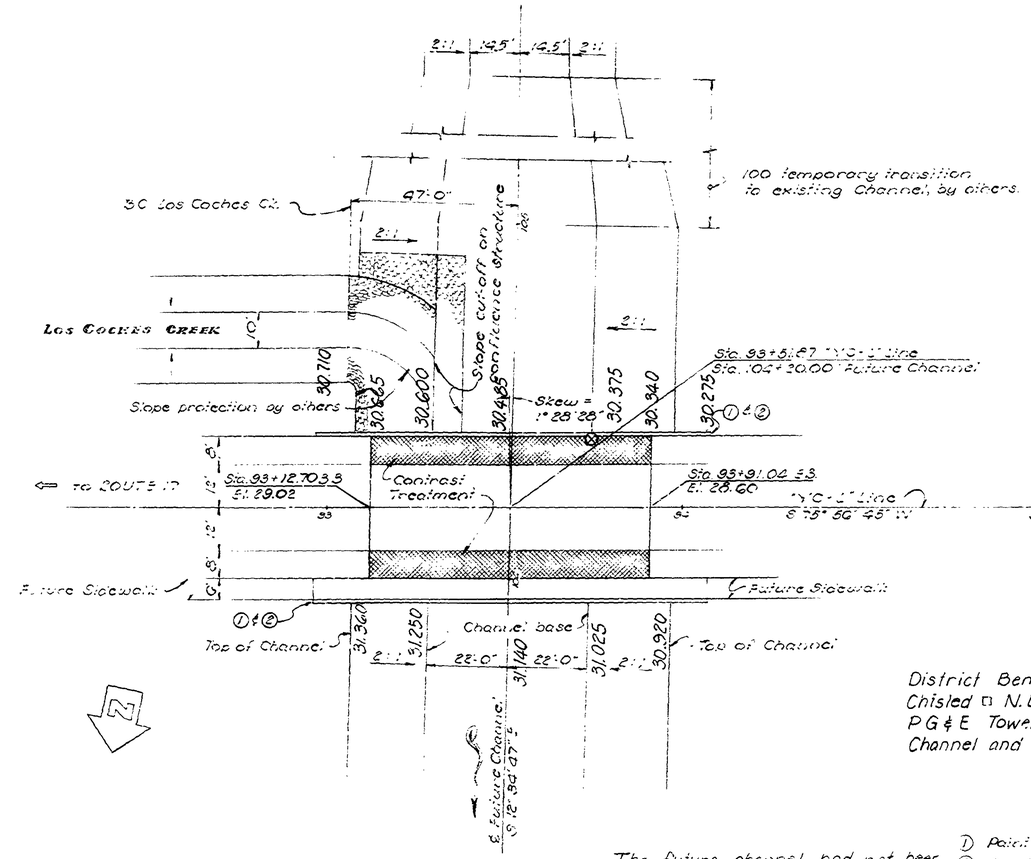

100' temporary transition to existing Channel, by others.

The future channel had not been construct at Contract end Vertical clearance was not measured.

District Bench Mark
Chisled □ N.E. Corner of N.E. PCC Base
P G & E Tower in S.W. Quad of Berryessa Channel and YC-L Line. Elev. 29.255

① Point No. of Bridge & Year constructed.
② Point Name of Bridge
③ Point of min. vertical clearance

FOR GENERAL NOTES SEE "Foundation Plan & Grid Grades"

LIVE LOADING HS20-44 AND ALTERNATIVE

INDEX TO PLANS

Sheet No. — Title
1 ——— General Plan
2 ——— Foundation Plan
3 ——— Abutment and Pier Details
4 ——— Slab Details - 2 Spans
5 ——— Log of Test Boring

The following sheets to be found in the "STANDARD PLANS" book dated 1968
B2-1 ——— Concrete Pile Details 45T
B11-0 ——— Barrier Railing Type 1
B11-1 ——— Barrier Railing Types 2,4,5
B11-2 ——— Barrier Railing Details
See Calaveras Road Undercrossing - 37-302 for the following structure detail sheets:
A1 Modified Barrier Railing Details - S
A2 Modified Barrier Railing Details - A
A3 Bridge Approach Guard Railing - Layout
A4 Modified Bridge Approach Guard Railing
A5 Barrier Railing Details - Steel Post
A-6 Type 1 Slope Paving Details

AS BUILT PLANS
Contract No. 04-119504
Date Completed
Document No. 41000389

AS BUILT
CORRECTIONS BY D.J. Patterson - M.G.
CONTRACT NO. 04-119504
DATE 11-9-70 / 4-8-71

CONFORMED

BRIDGE DEPARTMENT
··· DESIGN SECTION ··· 6
Section Supervisor H. L. Paul
Project Designer L. H. Caldwell

DESIGN	By J. Chimura 7/67	Checked C. W. Bragg 9/67		
DETAILS	By J. Chimura 7/67	Checked C. W. Bragg 9/67		
LAYOUT	By J. Chimura 8/67	Checked C. W. Bragg 9/67		
QUANTITIES	By L. Nelson 10/67	Checked K. Bergman 11/67		
SPECIFICATIONS	By H. Burkert 1968	Plans and Specs. Comp. by		
Approval Recommended by		Registered Civil Engr. License No. 6720		

STATE OF CALIFORNIA
TRANSPORTATION AGENCY
DEPARTMENT OF PUBLIC WORKS
DIVISION OF HIGHWAYS

BERRYESSA CREEK BRIDGE

LOCATED .5 MI. S. OF CALAVERAS RD. AND .2 MI. S. OF JACKLIN ROAD IN THE CITY OF MILPITAS IN SANTA CLARA COUNTY.

GENERAL PLAN

BRIDGE NO.	POST MILE	DRAWING NO.	SHEET	OF
37C-57		37C57-1	1	5

REVISION DATES (PRELIMINARY STAGE ONLY)

WO 119501
CU 04 204

Disregard prints bearing earlier revision dates

253

I HEREBY CERTIFY THAT THIS IS A TRUE AND ACCURATE COPY OF THE ABOVE DOCUMENT TAKEN UNDER MY DIRECTION AND CONTROL ON THIS DATE IN SACRAMENTO, CALIFORNIA PURSUANT TO AUTHORIZATION BY THE DIRECTOR OF PUBLIC WORKS.

ClibPDF - www.fastio.com

Revised Chart 3-61 RTK

Added Camber Diagram & notes revised thereto. FHS 5-9-62

Removed notes above "Longitudinal or Transverse Slab Const. Jt." detail 3-17-63 JFJ

Revised Title Block and Live Loading to HS-20-44 22 Sept 65 EJJ

Deleted "Notes". Revised: Steel Spacing note to Longitudinal Reg. Table; Title Block added "and Notes". 7 Jan 66 EJJ

DIST	COUNTY	ROUTE	POST MILES-TOTAL PROJECT	SHEET NO.	TOTAL SHEETS
04	Sol, Nap	680	M 7.2/R6.8	256	369

R. C. Blake
BRIDGE ENGINEER - CIVIL ENGINEER - STRUCTURE DESIGN

DATE APPROVED April 22, 1968

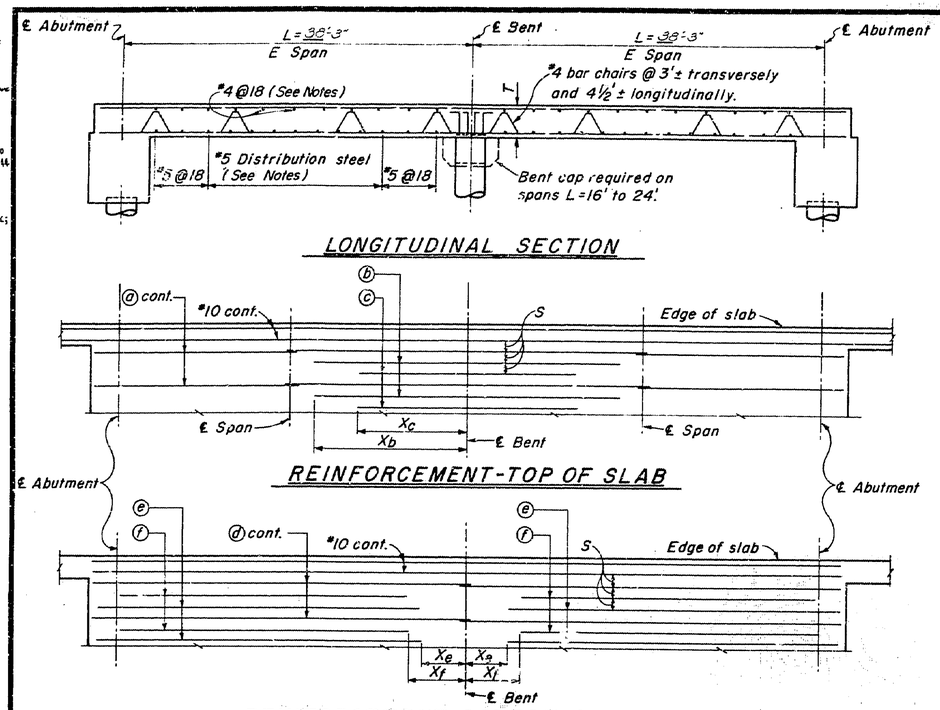

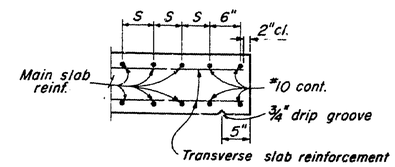

EDGE OF SLAB DETAIL

Curb and railing not shown

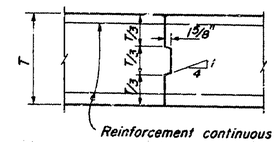

Note: Transverse joints, if used, to be located at ¼ point of span and longitudinal joint to be located at edge of traffic lanes unless otherwise permitted by the Engineer.

LONGITUDINAL OR TRANSVERSE SLAB CONSTRUCTION JOINT

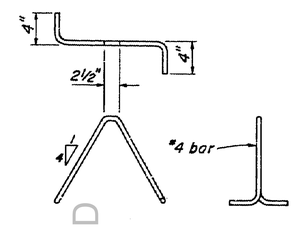

BAR CHAIR DETAIL

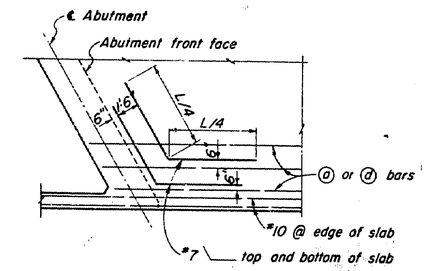

OBTUSE CORNER DETAIL

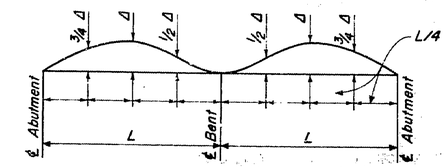

CAMBER DIAGRAM

TOTAL SLAB DEFLECTION DUE TO DEAD LOADS

The total deflection will be reached about 4 years after falsework removal. For values at time of falsework removal divide those shown by 4.

The amount of camber for construction will be determined by the Engineer.

REINFORCEMENT			
L = Length of Span			
Top of Slab	ⓐ bars	Size	#9
		Length	82'-0"
	ⓑ bars	Size	#11
		Length	21'-6"
		Xb	10'-9"
	ⓒ bars	Size	#11
		Length	11'-0"
		Xc	5'-6"
Bottom of Slab	ⓓ bars	Size	#9
		Length	81'-0"
	ⓔ bars	Size	#9
		Length	31'-6"
		Xe	7'-6"
	ⓕ bars	Size	#10
		Length	24'-6"
		Xf	10'-3"
Dist.-Steel Spacing			9"
T = Thickness of slab			1'-8¾"
S = Bar Spacing			5½"
Clearance to main reinforcing			2"
Ultimate dead load deflection @ ℄ Span			.06'

NOTES :

Splices in top main bars to be 35 dia. and located near center of span.

Splices in bottom main bars to be 20 dia. and located near bent.

Spacing of #4 @ 18 is measured normal to bars.

Spacing of #5 bars in bottom of slab is measured along ℄ roadway. For spacing in center half of span see Table.

Place all transverse bars parallel to bent.

AS BUILT PLANS
Contract No. 04-119504
Date Completed
Document No. 4/0003891

No As Built Changes
AS BUILT
CORRECTIONS BY R. Ogata-M.G.
CONTRACT NO. 04-119504
DATE 11-9-70/4-8-71

LIVE LOADING: HS-20-44 and ALTERNATIVE

STANDARD DRAWING
Submitted by: John Ash
DESIGN: R. W. Hall
DETAILS: R. Wilkinson
Approved Recommended: W. T. Cook
Approved: R. C. Blake
BRIDGE ENGINEER
No. C 2149

1/66 STATE OF CALIFORNIA TRANSPORTATION AGENCY DEPARTMENT OF PUBLIC WORKS DIVISION OF HIGHWAYS XS-12-38

BERRYESSA CREEK BRIDGE

SLAB DETAILS-2 SPANS

BRIDGE NO.	POST MILE	DRAWING NO.	SHEET	OF
37C-57		37C57-4	4	5

REVISION	DATES	(PRELIMINARY STAGE ONLY)
7/66		

Disregard prints bearing earlier revision dates

I HEREBY CERTIFY THAT THIS IS A TRUE AND ACCURATE COPY OF THE ABOVE DOCUMENT TAKEN UNDER MY DIRECTION AND CONTROL ON THIS DATE IN SACRAMENTO, CALIFORNIA PURSUANT TO AUTHORIZATION BY THE DIRECTOR OF PUBLIC WORKS.

DATE 4/13/71 SIGNATURE [illegible] TITLE Sr. Draftsman

CONFORMED

ClibPDF - www.fastio.com

DIST.	COUNTY	ROUTE	POST MILES—TOTAL PROJECT	SHEET NO.	TOTAL SHEETS
04	SCl, Ala	680	M 7.2 / R6.8	254	363

BRIDGE ENGINEER — REGISTERED CIVIL ENGINEER NO. 5385

DATE APPROVED April 22, 1968

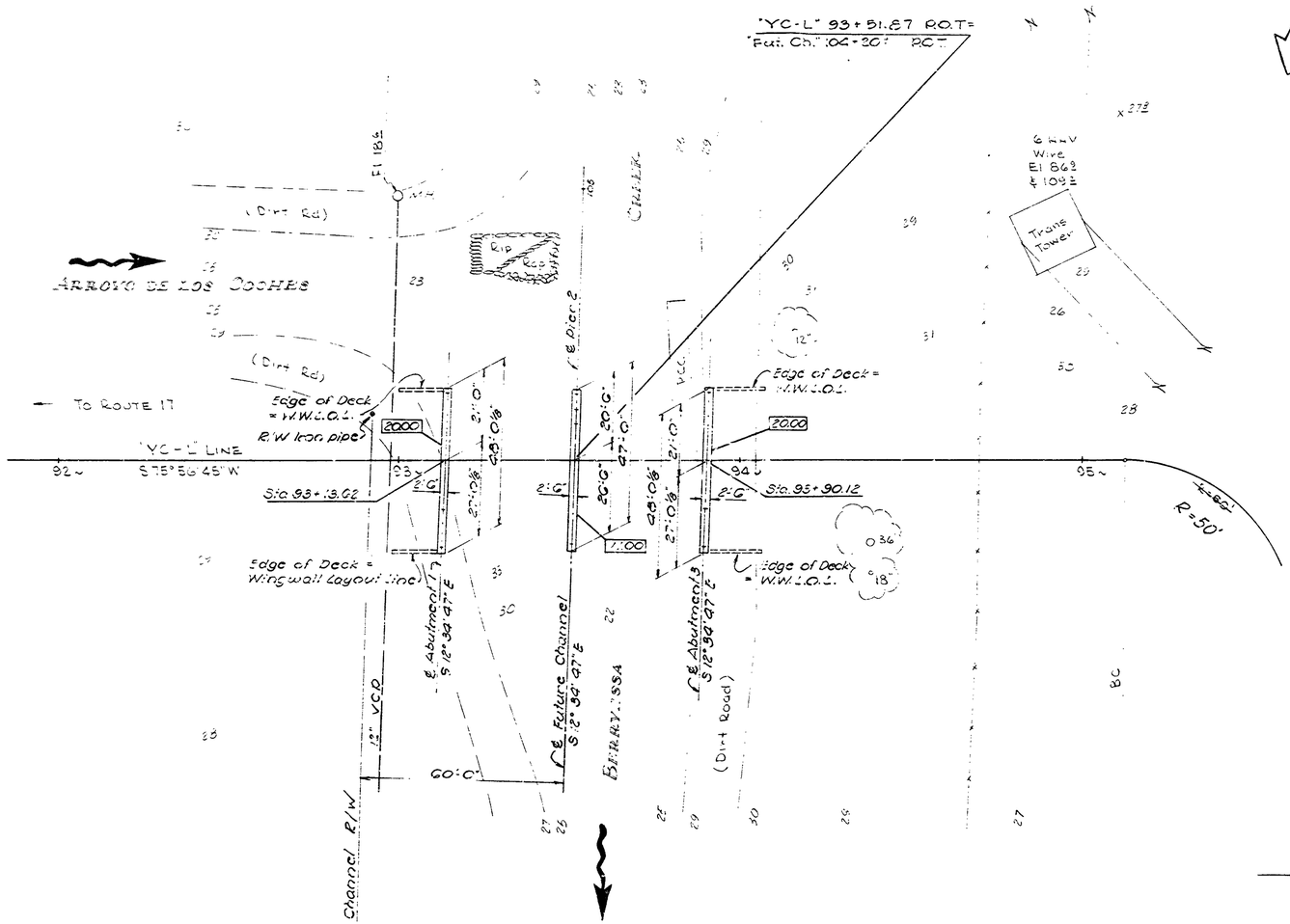

POT 16
Fd-1P in Mon well at
E Dempsey & Calaveras Rd
Elev 42.39

TBM "A"
Set-Top ginny 25 Lt
"YC-L" 93 ~
Elev 30.25

Note:

+ Indicates piles.

▭ Indicates bottom of footing elevations.

General Notes (Highway Structures)

Design: A.A.S.H.O. dated 1961 with revisions and as supplemented by Bridge Planning and Design Manual.

Live Loading: HS 20-44 and Alternative

Reinforced Concrete: F_s = 20,000 p.s.i., N = 10
F_c = 1,200 p.s.i.

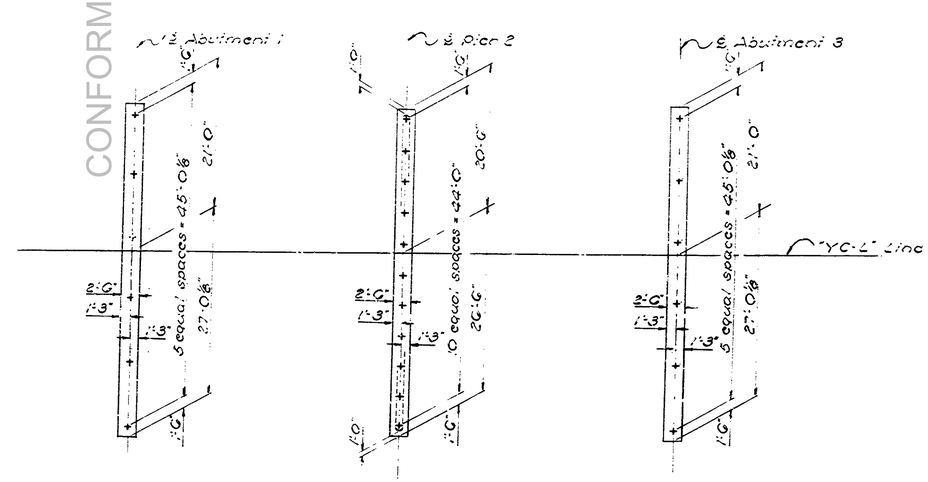

PILE LAYOUT
1" = 10'

CONFORMED

AS BUILT
CORRECTIONS BY R. Ogata - M.G.
CONTRACT NO. 04-119504
DATE 11-9-70 / 4-8-71

AS BUILT PLANS
Contract No. 04-119504
Date Completed
Document No. S/0003891

SCALE	1" = 20'
LEVEL DATUM	U.S.C.&G.S. 1929
FOR ALINEMENT TIES SEE	PR. 37C57-3
CONTOURS AS OF	6-6-66
SITE PLAN TO SUPPLEMENT DISTRICT DATA.	
SURVEY BY	JHE DATE 6-6-66
DRAWN BY	JHE DATE 7-7-66
TRACED BY	JS DATE 7-7-66

BRIDGE DEPARTMENT
DESIGN SECTION

Section Supervisor H. L. Gingle

DESIGN	By T. Chinuya	7/67
	Checked C. W. Craig Jr.	9/67
DETAILS	By T. Chinuya	7/67
	Checked C. W. Craig Jr.	9/67
QUANTITIES	By [illegible]	10/67
	Checked [illegible]	10/67

STATE OF CALIFORNIA
HIGHWAY TRANSPORTATION AGENCY
DEPARTMENT OF PUBLIC WORKS
DIVISION OF HIGHWAYS

BERRYESSA CREEK BRIDGE

FOUNDATION PLAN

PR-37C57-1

BRIDGE NO.	POST MILE	DRAWING NO.	SHEET	OF
37C-57		37C57-2	2	5

REVISION DATES (PRELIMINARY STAGE ONLY): 7/10/67 8/25/7 10/6

WC
CU

Disregard prints bearing earlier revision date: E-37

254

I HEREBY CERTIFY THAT THIS IS A TRUE AND ACCURATE COPY OF THE ABOVE DOCUMENT TAKEN UNDE IN

ClibPDF - www.fastio.com

Revised Railing Width Size, Title Block, Co Note Seq, and Live Loading
10 Aug 66 EJJ

Changed 1'-0" in Sec "AA" to
JTJ 8-25-66

Deleted "Wingwall Elev" Revised: Fillet in "Part Plan-Abut", #4 Bars in "Sec A-A", Reinforcing in "Sec F-F", Title Block
7 Jan 66 EJJ

DIST	COUNTY	ROUTE	POST MILES - TOTAL PROJECT	SHEET NO.	TOTAL SHEETS
04	SCl, Alg	680	M 7.2 / R6.8	235	363

Chief Bridge Engineer — Civil Engineer — Assistant Engineer

DATE APPROVED April 22, 1968

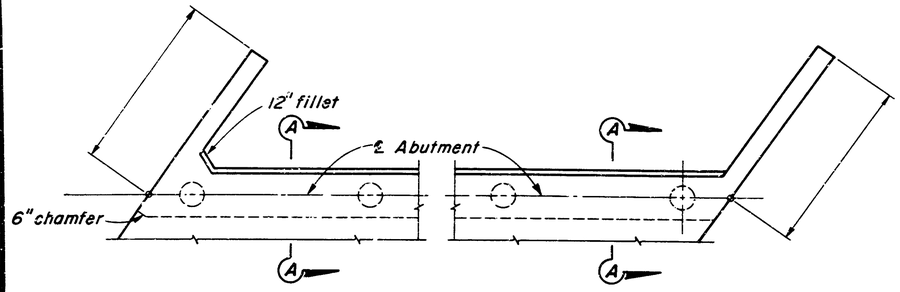

PART PLAN-ABUTMENT
With Skew

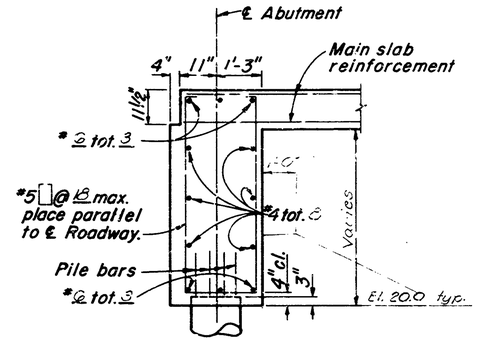

SECTION A-A

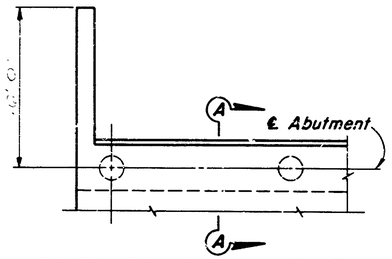

PART PLAN-ABUTMENT
No Skew

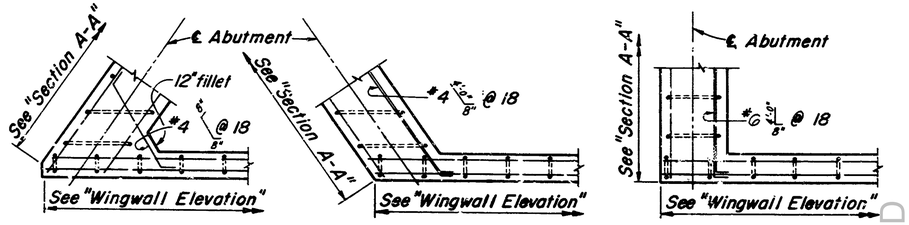

SECTIONS F-F
With Skew No Skew

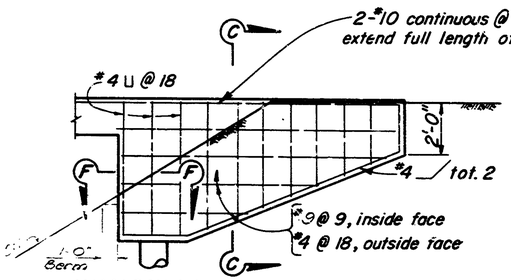

WINGWALL ELEVATION
Curb and Railing not shown

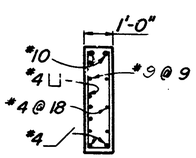

SECTION C-C

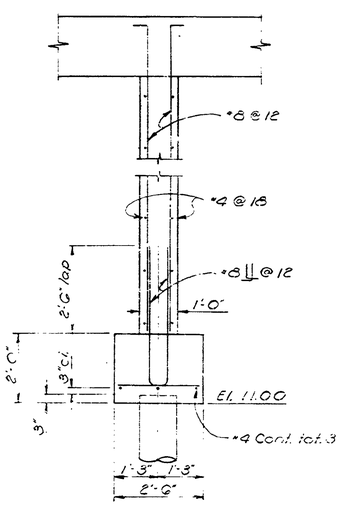

SECTION THRU PIER
½" = 1'-0"

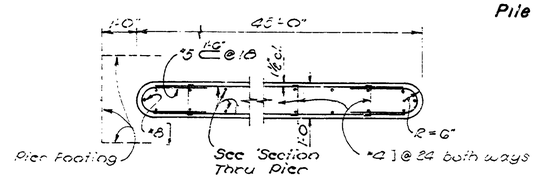

SECTION THRU PIER STEM
½" = 1'-0"

LIVE LOADING: HS 20-44 & ALTERNATIVE

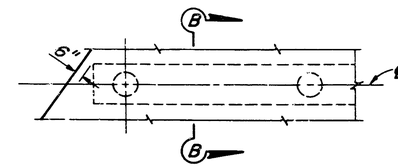

PART PLAN-BENT
With Skew

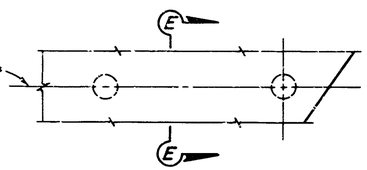

PART PLAN-BENT
With Skew

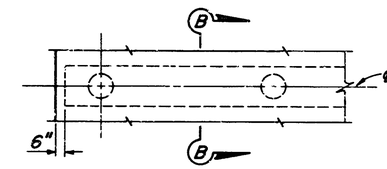

PART PLAN-BENT
No Skew

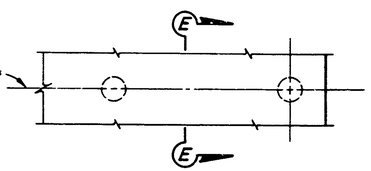

PART PLAN-BENT
No Skew

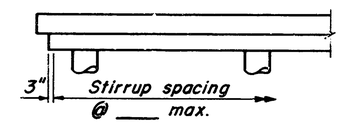

PART ELEVATION-BENT

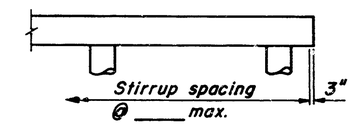

PART ELEVATION-BENT

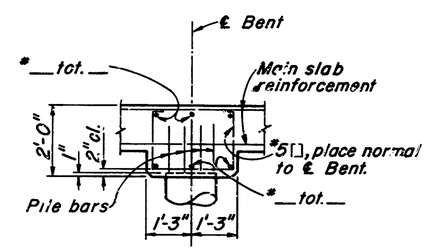

SECTION B-B

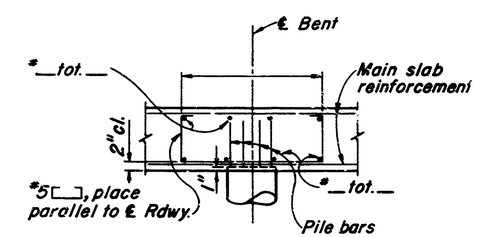

SECTION E-E

No As Built Changes
AS BUILT
CORRECTIONS BY R. Ogata - M.G.
CONTRACT NO. 04-119504
DATE 11-9-70 / 4-8-71

AS BUILT PLANS
Contract No. 04-119504
Date Completed
Document No. 1 0003891

STANDARD DRAWING
Submitted by: G. Sanders
DESIGN: R. Ogata 1-66
DETAILS: R. Ogata 1-66
Approval Recommended: 1-31-66
Approved: R. C. Blake
Chief Bridge Engineer
Chief Bridge Engineer
Chief Bridge Engineer
6129

1/66 — STATE OF CALIFORNIA TRANSPORTATION AGENCY DEPARTMENT OF PUBLIC WORKS DIVISION OF HIGHWAYS — XS-12-37

BERRYESSA CREEK BRIDGE

ABUTMENT AND PIER DETAILS

BRIDGE NO.	POST MILE	DRAWING NO.	SHEET	OF
37C-57		37C57-3	3	5

REVISION DATES (PRELIMINARY STAGE ONLY)
7/24/68 8/27 1/15/69

W.O.

Disregard prints bearing earlier revision dates

235

I HEREBY CERTIFY THAT THIS IS A TRUE AND ACCURATE COPY OF THE ABOVE DOCUMENT TAKEN UNDER MY DIRECTION AND CONTROL OF [illegible] TO

CONFORMED

ClibPDF - www.fastio.com

Revised Chart 3-61 RTK

Added Camber Diagram & notes relat. thereto. FWS 5-9-62

Removed notes about longitudinal or transverse slab Const. jt detail 3-19-63 JT

Revised Title Block and use Loading to HS-20-44 22 Sept 65 EJJ

Deleted "Notes". Revised: Steel Anchor note in Longitudinal Sec; Table; Title Block added "Alternative". 7 Jan 66 EJJ

DIST	COUNTY	ROUTE	POST MILES-TOTAL PROJECT	SHEET NO.	TOTAL SHEETS
04	SCl. Ala	680	M 7.2/R6.8	256	363

Bridge Engineer — City Engineer — License No.

Date approved April 22, 1968

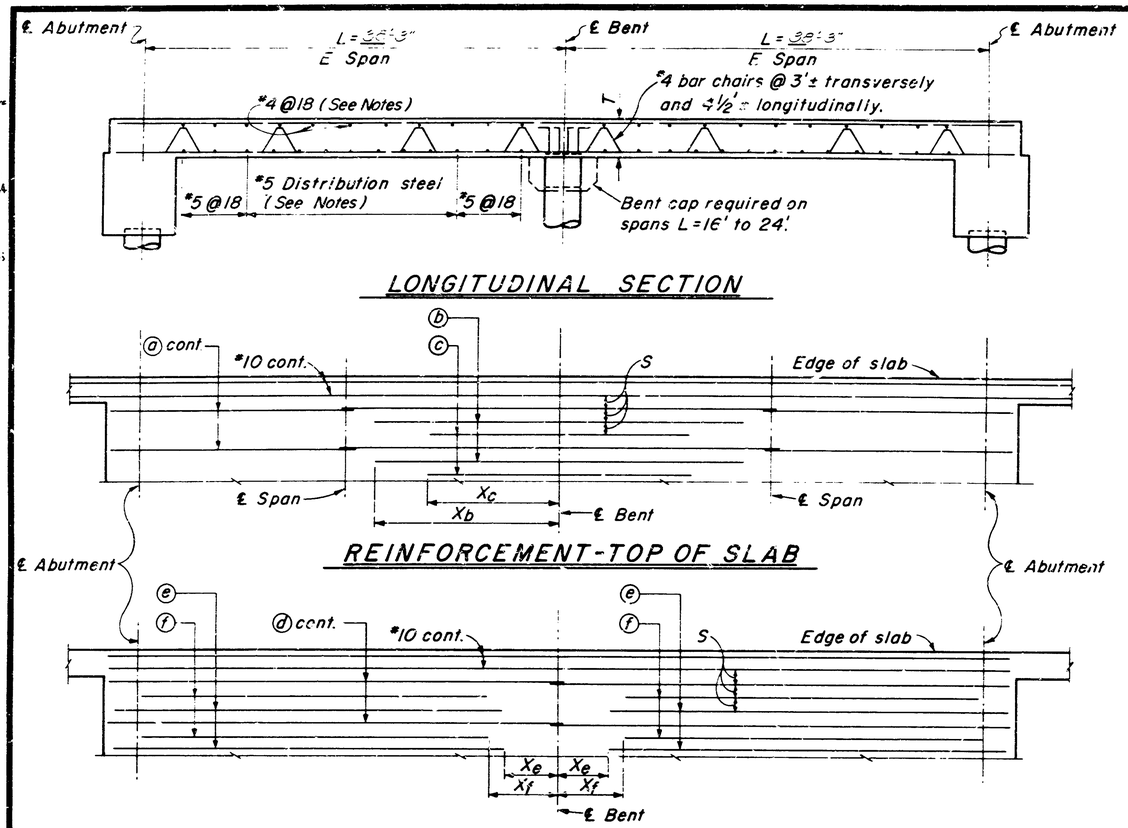

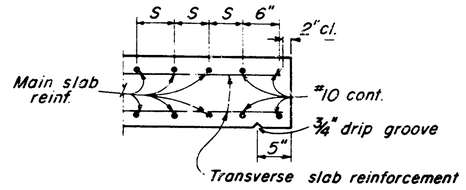

EDGE OF SLAB DETAIL

Curb and railing not shown

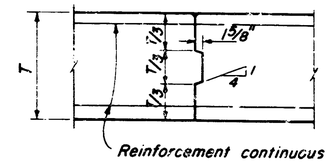

Note: Transverse joints, if used, to be located at ¼ point of span and longitudinal joint to be located at edge of traffic lanes unless otherwise permitted by the Engineer.

LONGITUDINAL OR TRANSVERSE SLAB CONSTRUCTION JOINT

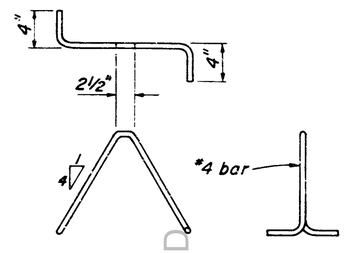

BAR CHAIR DETAIL

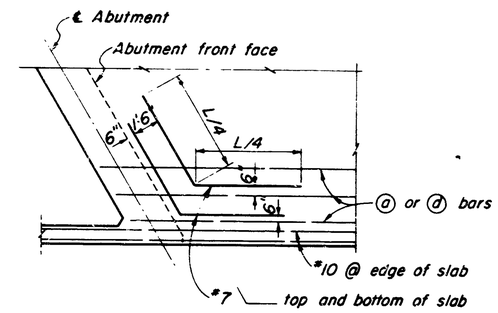

OBTUSE CORNER DETAIL

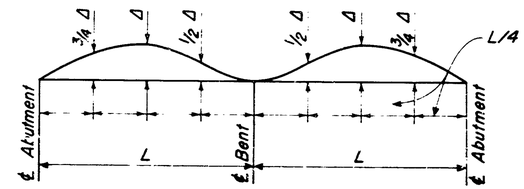

CAMBER DIAGRAM

TOTAL SLAB DEFLECTION DUE TO DEAD LOADS

The total deflection will be reached about 4 years after falsework removal. For values at time of falsework removal divide those shown by 4.

The amount of camber for construction will be determined by the Engineer.

L=Length of Span			
REINFORCEMENT	Top of Slab	ⓐ bars	Size #9
			Length 82'-0"
		ⓑ bars	Size #11
			Length 21'-6"
			Xb 10'-9"
		ⓒ bars	Size #11
			Length 11'-0"
			Xc 5'-6"
	Bottom of Slab	ⓓ bars	Size #9
			Length 81'-0"
		ⓔ bars	Size #9
			Length 31'-6"
			Xe 7'-6"
		ⓕ bars	Size #10
			Length 84'-6"
			Xf 10'-3"
Dist-Steel Spacing			9"
T=Thickness of slab			1'-6¾"
S=Bar Spacing			5½"
Clearance to main reinforcing			2"
Ultimate dead load deflection @ ℄ Span			.06'

NOTES :

Splices in top main bars to be 35 dia. and located near center of span.

Splices in bottom main bars to be 20 dia and located near bent.

Spacing of #4 @ 18 is measured normal to bars.

Spacing of #5 bars in bottom of slab is measured along ℄ roadway. For spacing in center half of span see Table.

Place all transverse bars parallel to bent.

LIVE LOADING: HS-20-44 and ALTERNATIVE

AS BUILT PLANS
Contract No. 04-119504
Date Completed
Document No. 1/0003891

No As Built Changes
AS BUILT
CORRECTIONS BY R. Ogata-M.G.
CONTRACT NO. 04-119504
DATE 11-9-70/4-8-71

STANDARD DRAWING
Submitted for Approval: DESIGN R. C. Blake; DETAILS R. C. Blake; Approval Recommended for: W. T. Hook; Approved: 6724

1/66 — STATE OF CALIFORNIA TRANSPORTATION AGENCY DEPARTMENT OF PUBLIC WORKS DIVISION OF HIGHWAYS — XS-12-38

BERRYESSA CREEK BRIDGE

SLAB DETAILS-2 SPANS

BRIDGE NO. 37C-57 | POST MILE | DRAWING NO. 37C57-4 | SHEET 4 OF 5

REVISION DATES (PRELIMINARY STAGE ONLY) 7/28/67

Disregard prints bearing earlier revision dates

I HEREBY CERTIFY THAT THIS ... OF ...

CONFORMED

ClibPDF - www.fastio.com

DIST.	COUNTY	ROUTE	POST MILES—TOTAL PROJECT	SHEET NO.	TOTAL SHEETS
04	SCl/Ala	680	M7.2/R6.8	207	363

BRIDGE ENGINEER — REGISTERED CIVIL ENGINEER NO. 15585

DATE APPROVED April 22, 1968

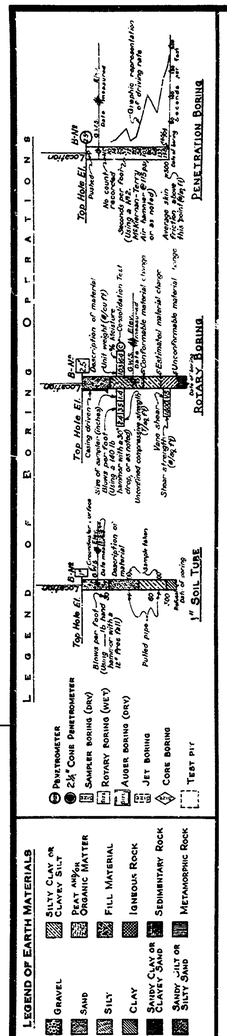

NOTE: Classification of earth material as shown on this sheet is based upon field inspection and is not to be construed to imply mechanical analysis.

FIELD STUDY	By R. Fox	
DRAWN	By K. Gallie	10-14-67
CHECKED	By M. Hershey	10-20-67

Approval Recommended by: Engineering Geologist

BRIDGE DEPARTMENT
ENGINEERING GEOLOGY SECTION

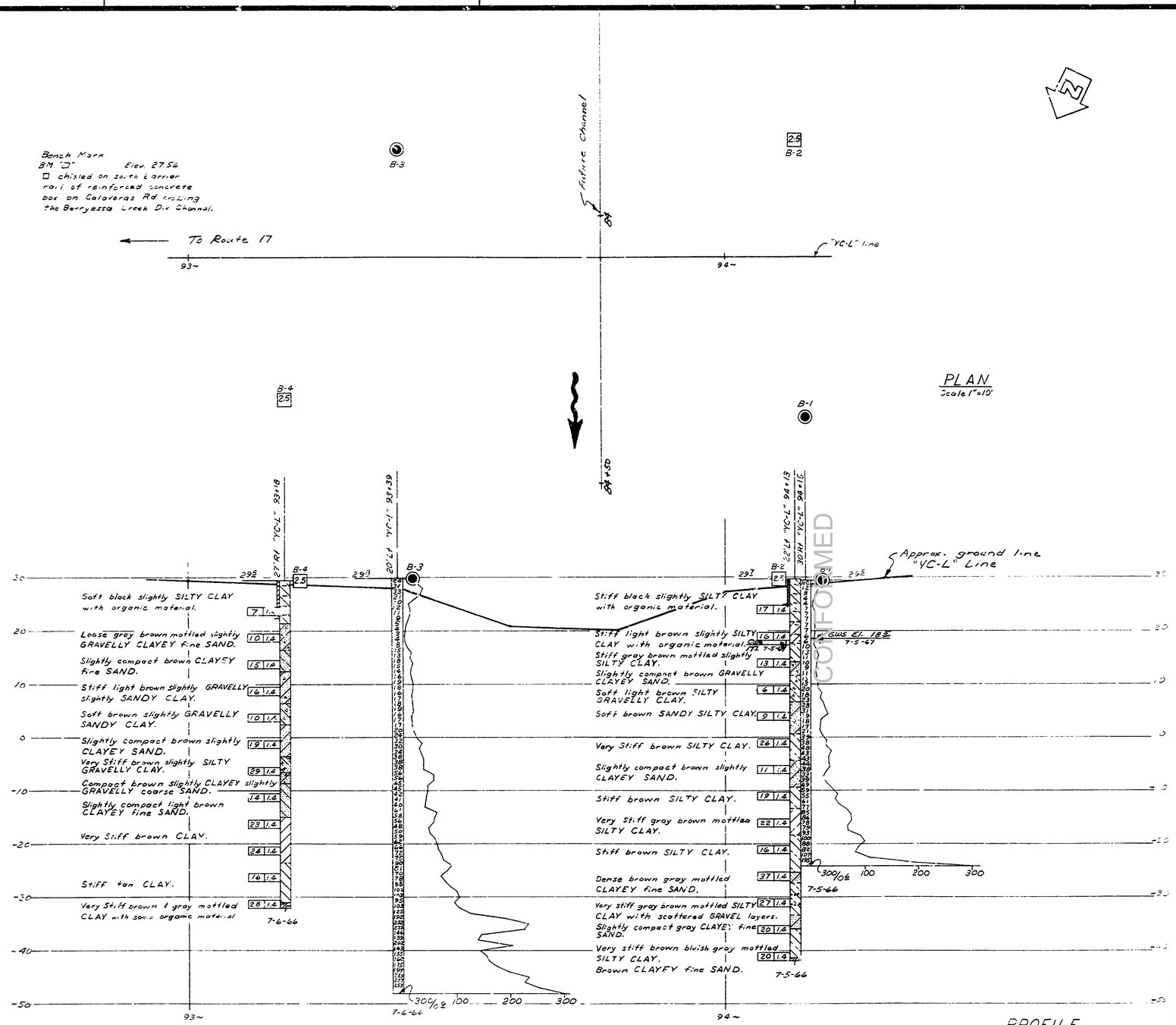

INFORMATION ON ACTUAL FOUNDATION CONDITIONS ENCOUNTERED IS ON FILE IN BRIDGE GEOLOGY SECTION

AS BUILT PLANS
Contract No. 04-119504
Date Completed
Document No. 4 0003891

STATE OF CALIFORNIA
TRANSPORTATION AGENCY
DEPARTMENT OF PUBLIC WORKS
DIVISION OF HIGHWAYS

BERRYESSA CREEK

LOG OF TEST BORINGS

BRIDGE NO.	POST MILE	DRAWING NO.	SHEET	OF
37C-57		37C57-5	5	14

WO 119503
CU 04204

PR-37C57-2
Disregard prints bearing earlier revision dates

REVISION DATES (PRELIMINARY STAGE ONLY)						
10/12/67						

I HEREBY CERTIFY THAT THIS IS A TRUE AND ACCURATE COPY OF THE ABOVE DOCUMENT TAKEN UNDER MY DIRECTION AND CONTROL ON THIS DATE IN SACRAMENTO, CALIFORNIA PURSUANT TO AUTHORIZATION BY THE DIRECTOR OF PUBLIC WORKS.

ClibPDF - www.fastio.com

PROFILE GRADE

NO SCALE

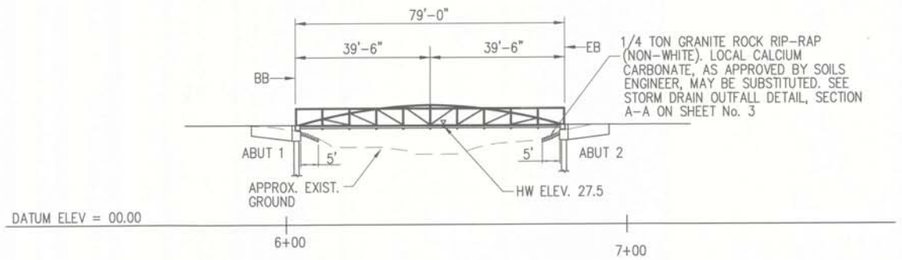

ELEVATION

SCALE: 1"=20'

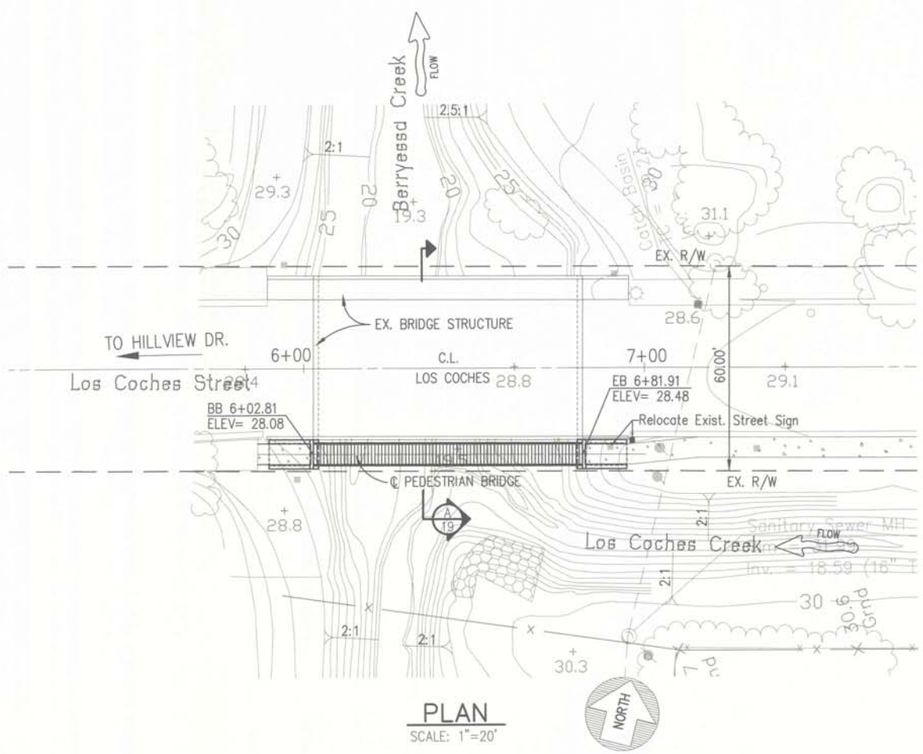

PLAN

SCALE: 1"=20'

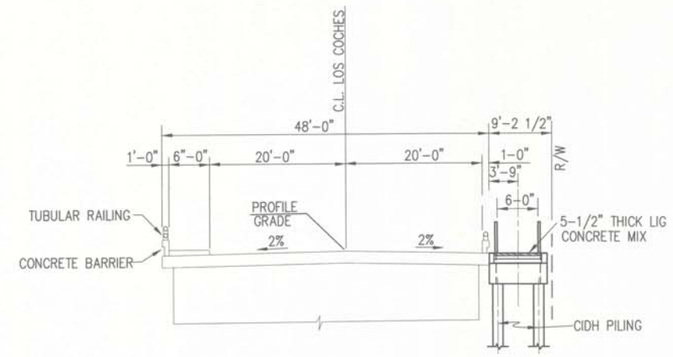

TYPICAL SECTION (A)

SCALE: 1"=10'

NOTES:

1. LIVE LOAD: 100 PSF AND 1000# POINT LOAD
2. SUPERSTRUCTURE DESIGN DEAD LOAD:
   - TRUSS 200 PLF
   - LIGHT WEIGHT PCC DECK (5-1/2" MIN. MAXIMUM) △ 330 PLF
3. SEISMIC: 0.[illegible]g; DEPTH TO ROCK > 85'
4. △ SOIL PARAMETERS:
   - ACTIVE = [illegible] PCF
   - PASSIVE = 250 PCF
   - u = 0.35
   - Fb = 200 PSF
   - FOR PILES,
     - ISOLATION FACTOR = 2
     - MIN. SPACING = 3d(PILE DIAMETER)
     - SKIN FRICTION = 500 PSF
     - a = 0.46g, and ALLUVIUM(DEPTH TO BEDROCK) > 85'
5. △ CONTRACTOR SHALL PROVIDE STEEL TRUSS SHOP DRAWINGS FOR REVIEW AND APPROVAL 3 WEEKS PRIOR TO ISSUANCE OF BUILDING PERMIT

CONCRETE PILE DATA

LOCATION	DIAMETER	CUT OFF ELEV.	SPECIFIED TOP ELEV.
ABUTMENT 1	18"	23.83	7.83
ABUTMENT 2	18"	24.23	8.23

REGISTERED PROFESSIONAL ENGINEER MICHAEL R. COOPER 28072 Exp. 3/31/03 CIVIL STATE OF CALIFORNIA

ABREVIATIONS:

BB	BEGIN BRIDGE
EB	END BRIDGE
PSF	POUNDS PER SQUARE FOOT
PLF	POUNDS PER LINEAL FOOT
g	GRAVITY
CONT.	CONTINUOUS
MAX.	MAXIMUM

Record Drawings
To be completed prior to acceptance of work by the City
Signature & Seal: Michael R. Cooper Date: 3/31/03
P.E. No. 28072 Exp.
Public Works Inspector: N/A
Public Improvements officially Accepted by the City Council on:

SOIL ENGINEER:
ENGEO INCORPORATED
2401 CROW CANYON ROAD, SUITE 200
SAN RAMON, CA 94523
CONTACT: JULIA MORIARTY
(510) 838-1600

REGISTERED PROFESSIONAL ENGINEER FRANK G. FONG No. 27852 Exp. 3/31/2002 CIVIL STATE OF CALIFORNIA

CONFORMED

Ruggeri - Jensen Azar & Associates
ENGINEERS • PLANNERS • SURVEYORS
100 N. MILPITAS BLVD., SUITE 160, • MILPITAS, CA 95035
PHONE: (408) 934-1388 • FAX: (408) 934-1288

GENERAL PLAN
PEDESTRIAN BRIDGE AT BERRYESSA CREEK
SINCLAIR HORIZONS – TRACT 9018
MILPITAS, CALIFORNIA
FOR THE MISSION PEAK COMPANY, INC.

REVISIONS

NUM	DATE	BY	DESCRIPTION	CITY ENGR. APPR.	DATE
△	6/30	TP	REVISIONS PER BUILDING DIVISION COMMENTS		

CITY OF MILPITAS
PUBLIC WORKS DEPARTMENT
ENGINEERING DIVISION

APPROVED:
City Engineer — Date
Any changes to public improvements shall be approved by the City Engineer.
Recommended for approval: Fire Dept. — Date; Engineering — Date

Project No. 3033
File No. 2-918
Sheet 19 of 20

2-918 20/21

UPDATED: 07/02/1998 10:16am
ACAD FILE: 62031119.dwg

RJA JOB NUMBER: 962031

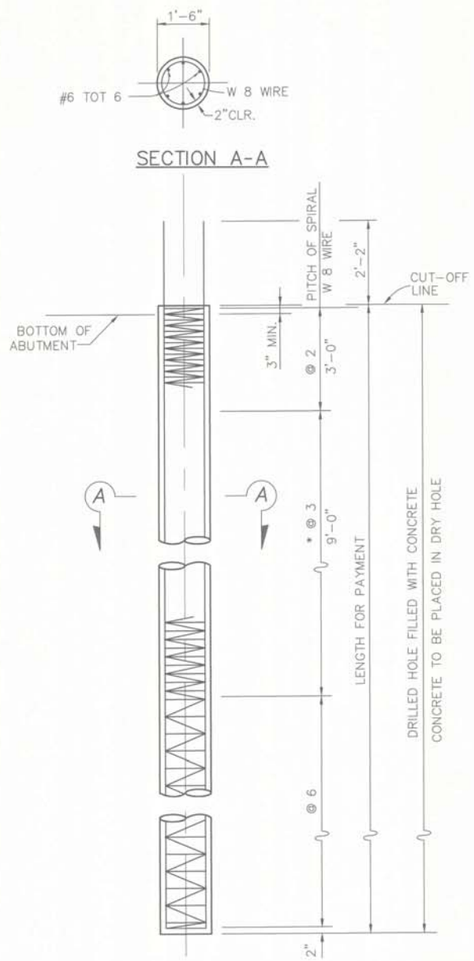

ELEVATION

* @ 2 AT OPTION OF CONTRACTOR

PILE NOTES:

1. LAPPED SPLICES IN SPIRAL PILE REINFORCEMENT SHALL BE LAPPED AT LEAST 80 WIRE DIAMETERS. SPIRAL PILE REINFORCEMENT AT SPLICES AND AT END SHALL BE TERMINATED WITH A 135° HOOK WITH 6" TAIL HOOKED AROUND A LONGITUDINAL BAR.

PILE DETAILS
SCALE: 1/2" = 1'-0"

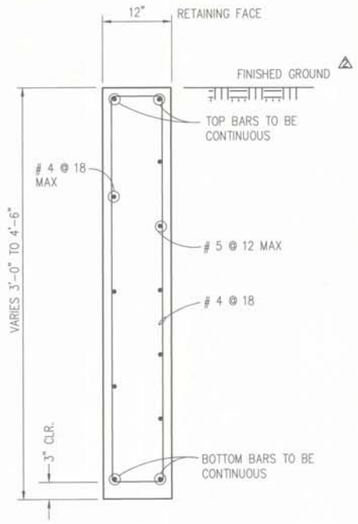

SECTION C-C
SCALE: 1" = 1'-0"

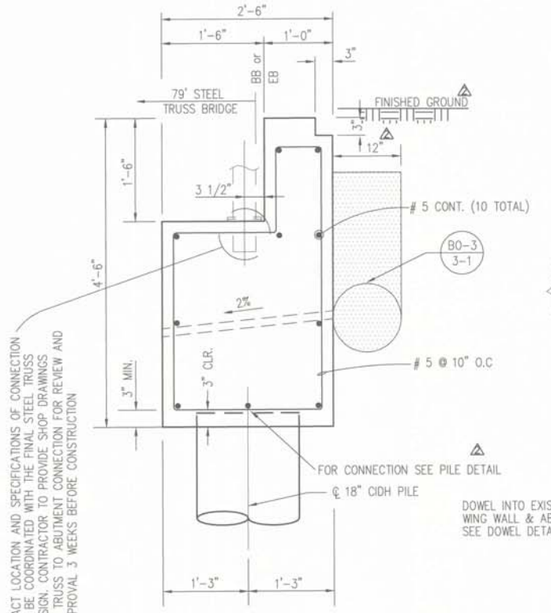

SECTION B-B
SCALE: 1" = 1'-0"

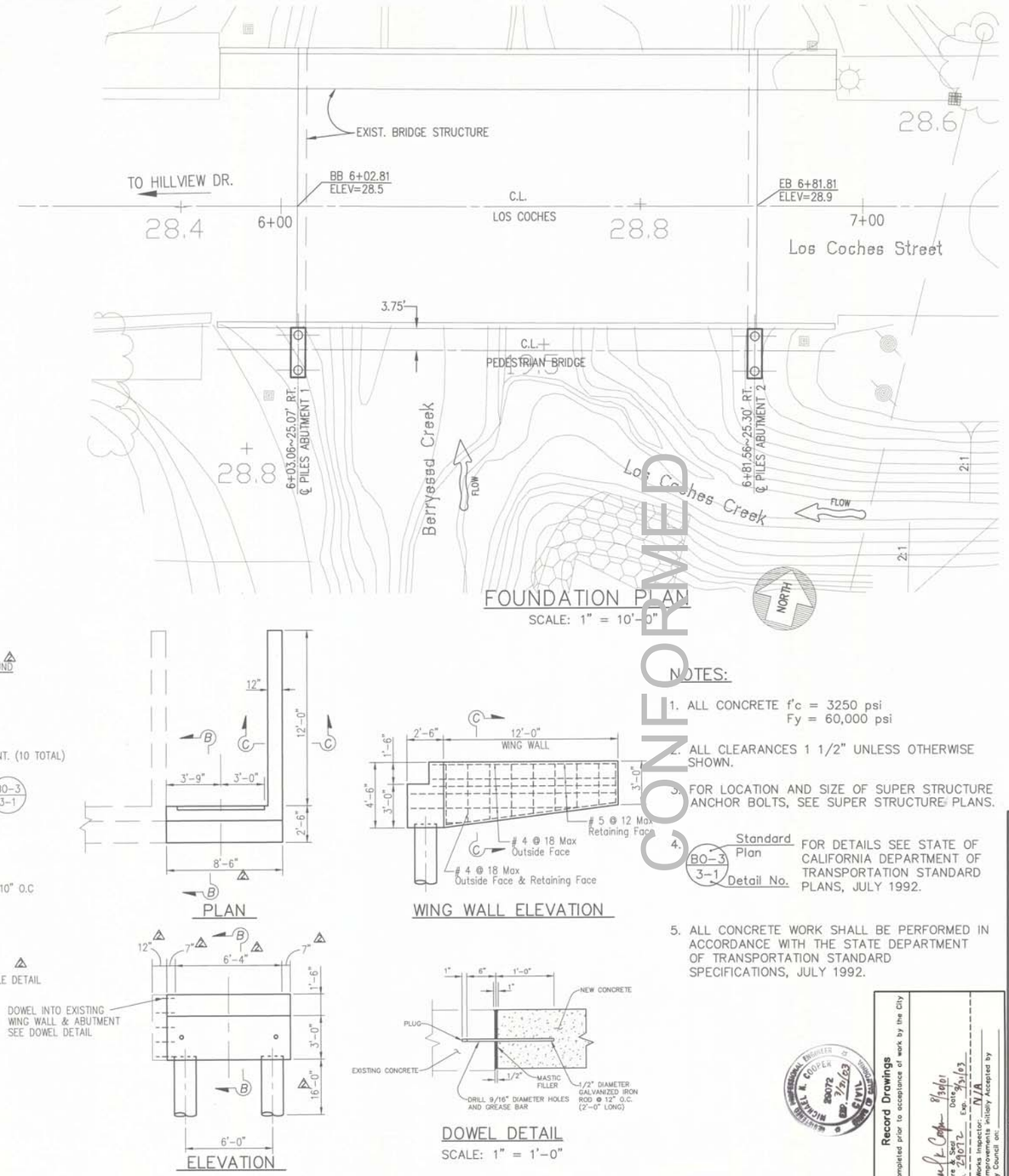

ABUTMENT No. 2
(Abutment No. 1 Mirror Image)
SCALE: 1/4" = 1'-0"

NOTES:

1. ALL CONCRETE f'c = 3250 psi
   Fy = 60,000 psi
2. ALL CLEARANCES 1 1/2" UNLESS OTHERWISE SHOWN.
3. FOR LOCATION AND SIZE OF SUPER STRUCTURE ANCHOR BOLTS, SEE SUPER STRUCTURE PLANS.
4. BO-3 / 3-1 (Standard Plan / Detail No.) FOR DETAILS SEE STATE OF CALIFORNIA DEPARTMENT OF TRANSPORTATION STANDARD PLANS, JULY 1992.
5. ALL CONCRETE WORK SHALL BE PERFORMED IN ACCORDANCE WITH THE STATE DEPARTMENT OF TRANSPORTATION STANDARD SPECIFICATIONS, JULY 1992.

CONFORMED

Record Drawings
To be completed prior to acceptance of work by the City
Signature & Seal: P.E. No. 27872 Exp. 3/31/03 Date 8/30/01
Public Works Inspector: N/A
Public improvements initially Accepted by the City Council on: ____

MICHAEL R. COOPER No. 28072 Exp. 3/31/03 CIVIL STATE OF CALIFORNIA

REGISTERED PROFESSIONAL ENGINEER FRANK G. FONG No. 27892 Exp. 3/31/03 CIVIL STATE OF CALIFORNIA

Ruggeri - Jensen - Azar & Associates
ENGINEERS • PLANNERS • SURVEYORS
100 N. MILPITAS BLVD., SUITE 160, • MILPITAS, CA 95035
PHONE (408) 934-1288 • FAX (408) 934-1288

ABUTMENT-WINGWALL-PILE DETAILS
PEDESTRIAN BRIDGE AT BERRYESSA CREEK
SINCLAIR HORIZONS - TRACT 9018
MILPITAS, CALIFORNIA
FOR THE MISSION PEAK COMPANY, INC.

NUM	DATE	BY	REVISIONS DESCRIPTION	CITY ENGR APPR.	DATE
1	6/30	TP	COMMENT		

CITY OF MILPITAS
PUBLIC WORKS DEPARTMENT
ENGINEERING DIVISION

APPROVED:
City Engineer Date
Any changes to public improvements shall be approved by the City Engineer.
Recommended for approval: Fire Dept. Date
Engineering Date

Project No. 3033
File No. 2-918
Sheet 20 of 20

2-918 4/21

UPDATED: 07/02/1998 10:16am
ACAD FILE: 62031/20.dwg

RJA JOB NUMBER: 962031

Appendix I

As-Built Plans

Ames Avenue and Yosemite Drive Bridges

CONFORMED

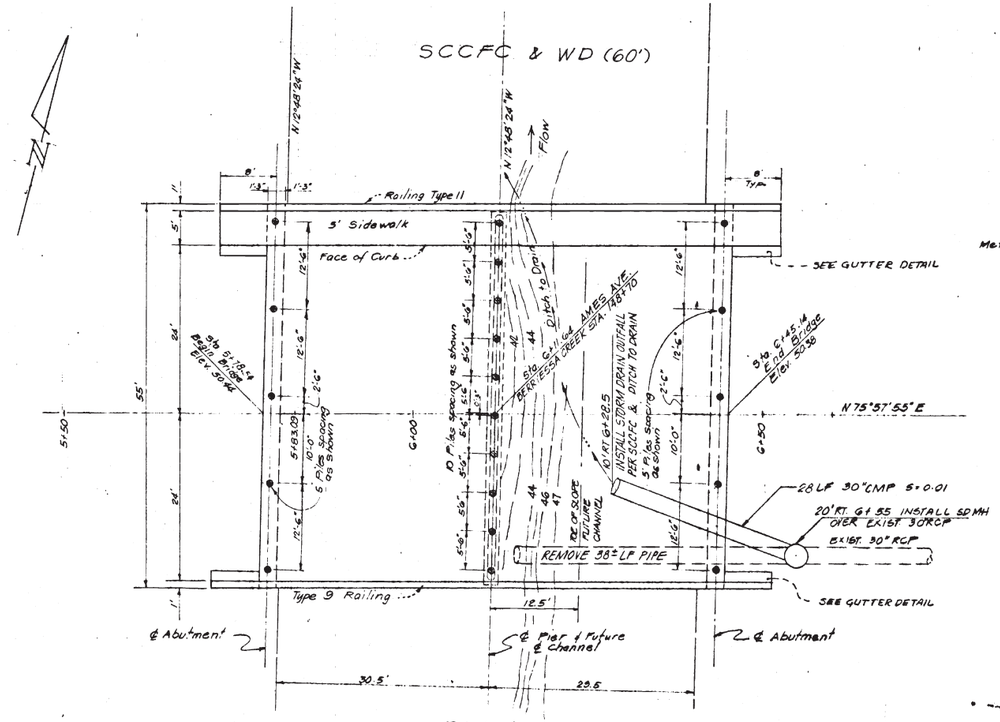

PLAN
SCALE: 1"=10'

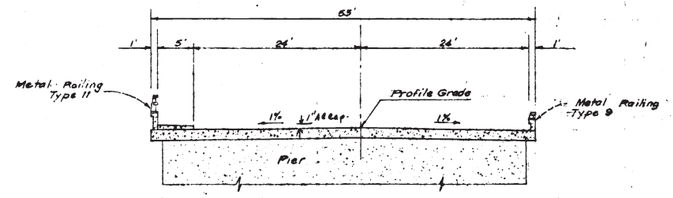

TYPICAL SECTION
SCALE 1"=10'

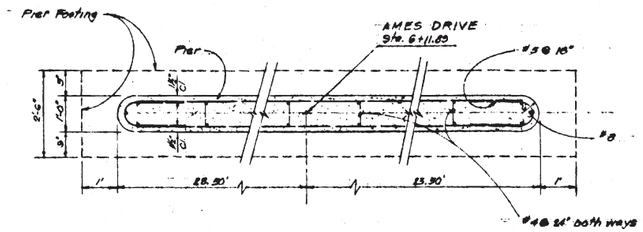

SECTION THRU PIER STEM
SCALE 1/2"=1'-0"

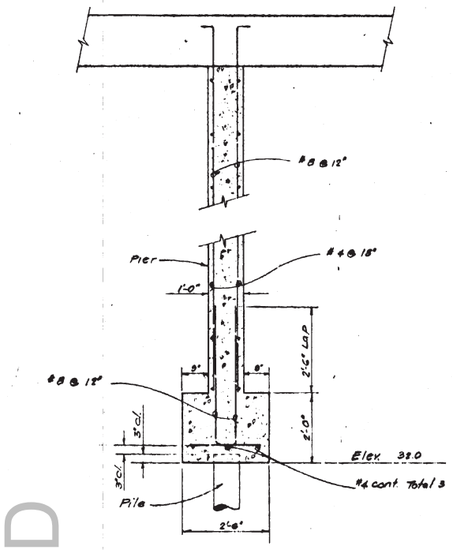

SECTION THRU PIER
SCALE: 1/2"=1'-0"

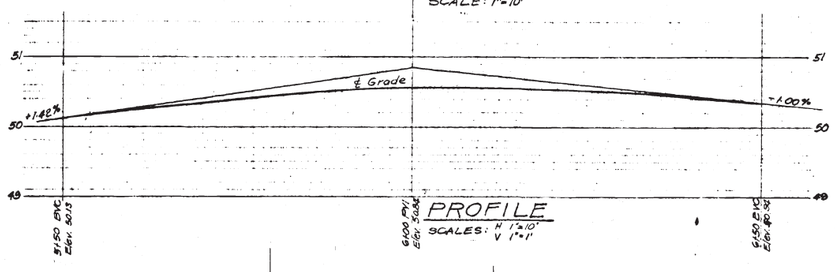

PROFILE
SCALES: H 1"=10' V 1"=1'

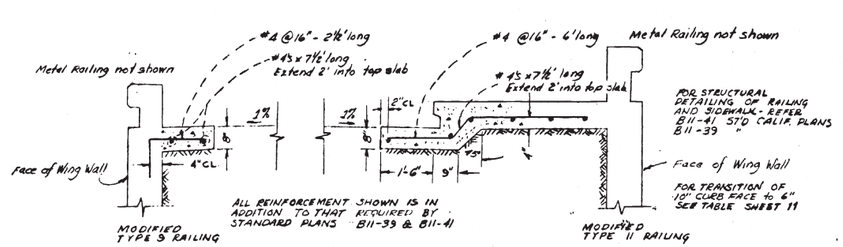

GUTTER DETAIL
SCALE: 1/2" = 1'

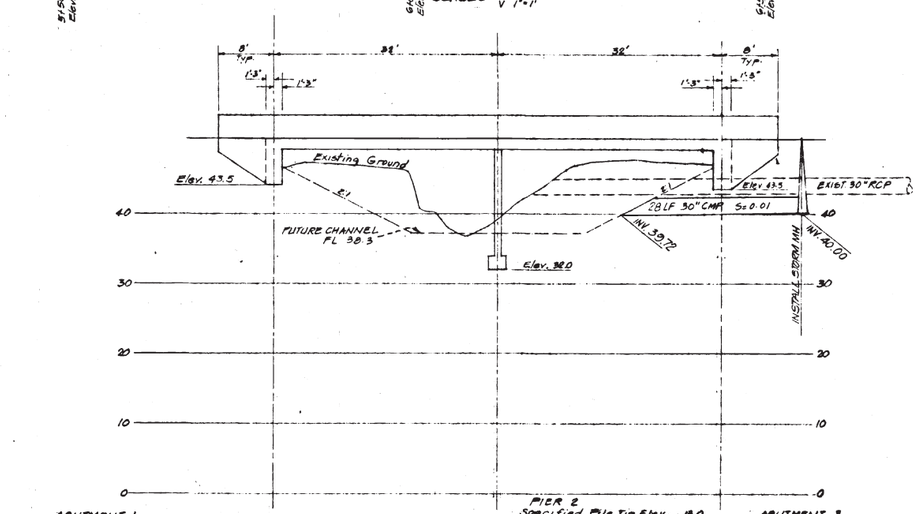

ABUTMENT 1
Specified Pile Tip Elev. = -7.0
Estimated Pile Tip Elev = -12.0

PIER 2
Specified Pile Tip Elev. = -13.0
Estimated Pile Tip Elev. = -18.0

ABUTMENT 3
Specified Pile Tip Elev = -7.0
Estimated Pile Tip Elev = -12.0

ELEVATION
SCALE: 1"=10'

STANDARD PLANS

The following sheets are included as shown in State of California Division of Highways Standard Plans dated January 1971.

B 2-1 Concrete Pile Details (See Note* Below)
B 11-39 Metal Railing Type 9
B 11-41 Metal Railing Type 11
B 11-43 Metal Railing Details - Type 9 & 11

GENERAL NOTES

Design HS 20-44 and alternative stresses
f_s = 24000 psi, f_c = 1300 psi, n = 10
Pile loading 45-ton concrete

APPROXIMATE QUANTITIES

Furnish Concrete Piling (Class II)	1055 LF
Driving Concrete Piles	20 Ea.
Metal Railing (Type 9)	80 LF
Metal Railing (Type 11)	80 LF

FINAL QUANTITIES

Concrete (Structure)	311 CY
Bar Reinforcing Steel	50,000 Lbs.

* NOTE:

Alternative "U" is deleted from Pile Options as shown on Sheet B 2-1 Concrete Pile Details.

Main Supports in falsework shall run north and south to accomodate vertical curve

APPROVED: Wesley D. Smith
FILE NUMBER: 2-325

CONFORMED

BISSELL & KARN, INC.
CIVIL ENGINEERS
2551 MERCED STREET · SAN LEANDRO, CALIFORNIA · 94577 · (415) 483-2170

AMES AVENUE BRIDGE
Constructed w/Ames Ave project

LOCAL IMPROVEMENT DISTRICT NO. 4
MILPITAS — CALIFORNIA
APPROVED: [illegible] RCE CIVIL ENGINEER NO. 9321
DATE: MAY 16, 1972 JOB NO. 5194

SCALE	DATE	DRAWN	CHECKED
AS SHOWN	3/14/72	E.I.T.	LL / R.C.

REVISIONS

SHEET NO. 27 OF 33 SHEETS

AS-BUILT

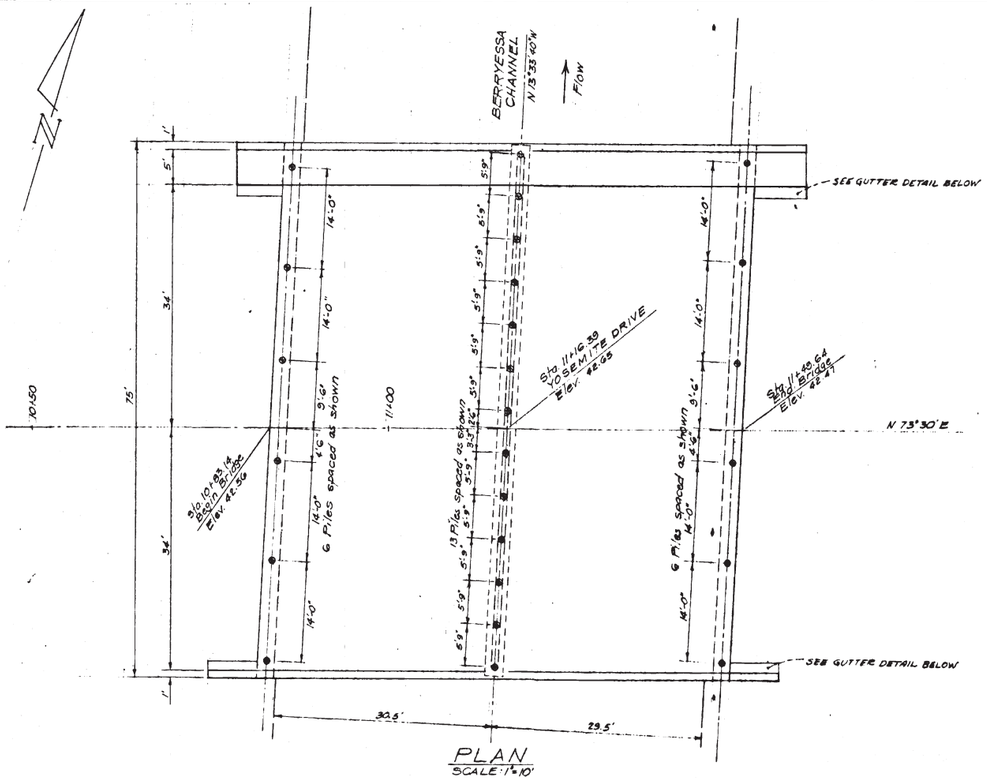

PLAN
SCALE: 1"=10'

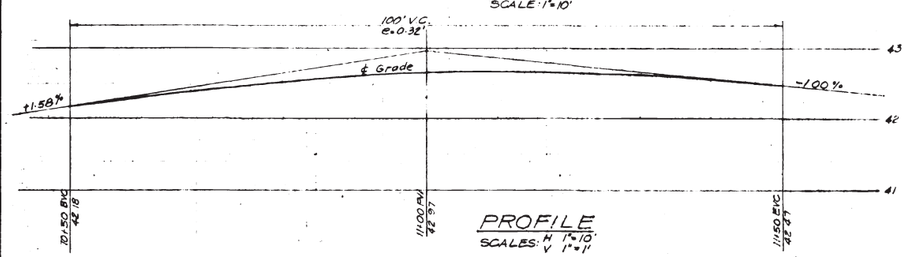

PROFILE
SCALES: H 1"=10'
V 1"=1'

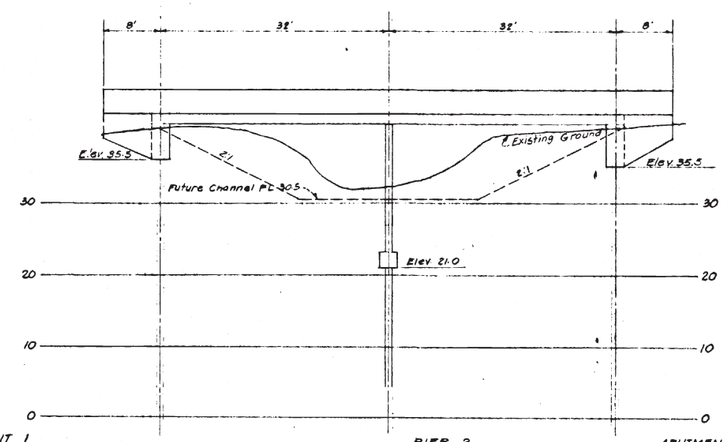

ABUTMENT 1
Specified Pile Tip Elev. = -15.0
Estimated Pile Tip Elev. = -20.0

PIER 2
Specified Pile Tip Elev. = -24.0
Estimated Pile Tip Elev. = -29.0

ABUTMENT 3
Specified Pile Tip Elev. = -15.0
Estimated Pile Tip Elev. = -20.0

ELEVATION
SCALE: 1"=10'

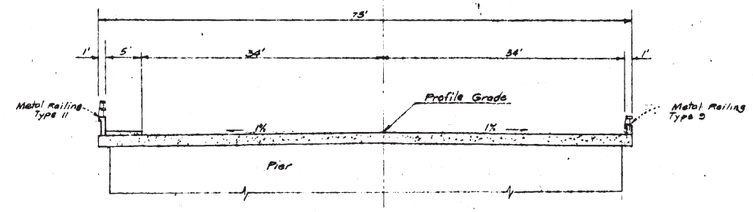

TYPICAL SECTION
SCALE: 1"=10'

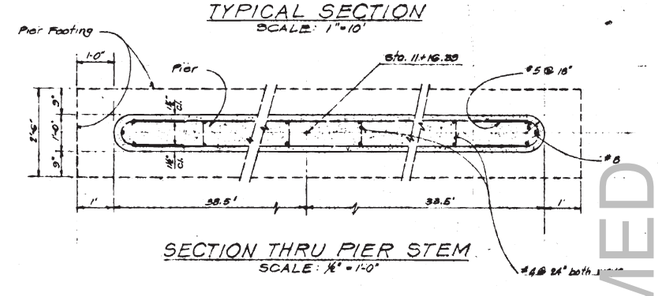

SECTION THRU PIER STEM
SCALE: 1/2" = 1'-0"

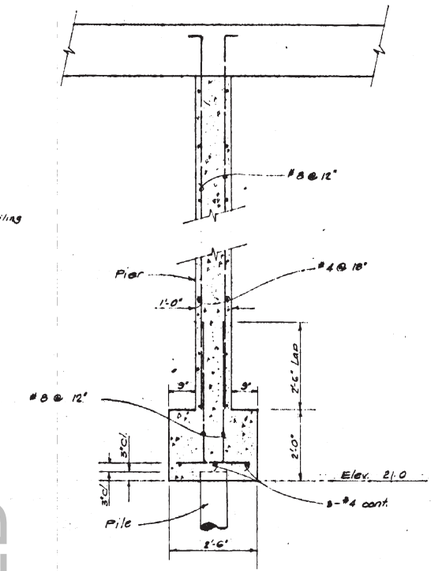

SECTION THRU PIER
SCALE: 1/2" = 1'-0"

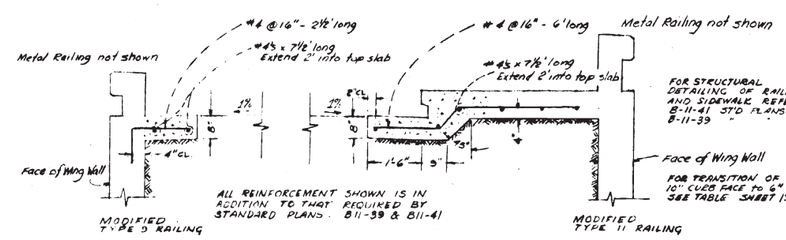

CUTTER DETAIL
SCALE: 1/2" = 1'

STANDARD PLANS

The following sheets are included as shown in State of California Division of Highways Standard Plans dated January 1971.

- B2-1 Concrete Pile Details (See Note* Below)
- B11-39 Metal Railing Type 9
- B11-41 Metal Railing Type 11
- B11-43 Metal Railing Details - Type 9 & 11

GENERAL NOTES

Design HS 20-44 and alternative stresses
f_c = 24000 psi, f_s = 1300 psi, n=10
Pile loading 45-ton concrete

APPROXIMATE QUANTITIES

Furnish Concrete Piling (Class II)	1322	LF
Driving Concrete Piles	25	EA
Metal Railing (Type 9)	80	LF
Metal Railing (Type 11)	80	LF

FINAL QUANTITIES

Concrete (Structure)	404	CY
Bar Reinforcing Steel	67,830	LBS.

*NOTE
Alternative "U" is deleted from Pile Options as shown on Sheet B2-1 Concrete Pile Details.

APPROVED: Wesley D. Smith
FILE NUMBER: 2-325

CONFORMED

BISSELL & KARN, INC.
CIVIL ENGINEERS
2551 MERCED STREET · SAN LEANDRO, CALIFORNIA · 94577 · (415) 483-2170

YOSEMITE DRIVE BRIDGE

LOCAL IMPROVEMENT DISTRICT NO 4
MILPITAS — CALIFORNIA

APPROVED: [illegible] RCE CIVIL ENGINEER NO. 9821
DATE: MAY 16, 1972 JOB NO. 5194

SCALE AS NOTED	DATE 3/16/72	DRAWN E.I.T.	CHECKED L.L./R.C.

REVISIONS

SHEET NO. 28 OF 33 SHEETS

AS-BUILT

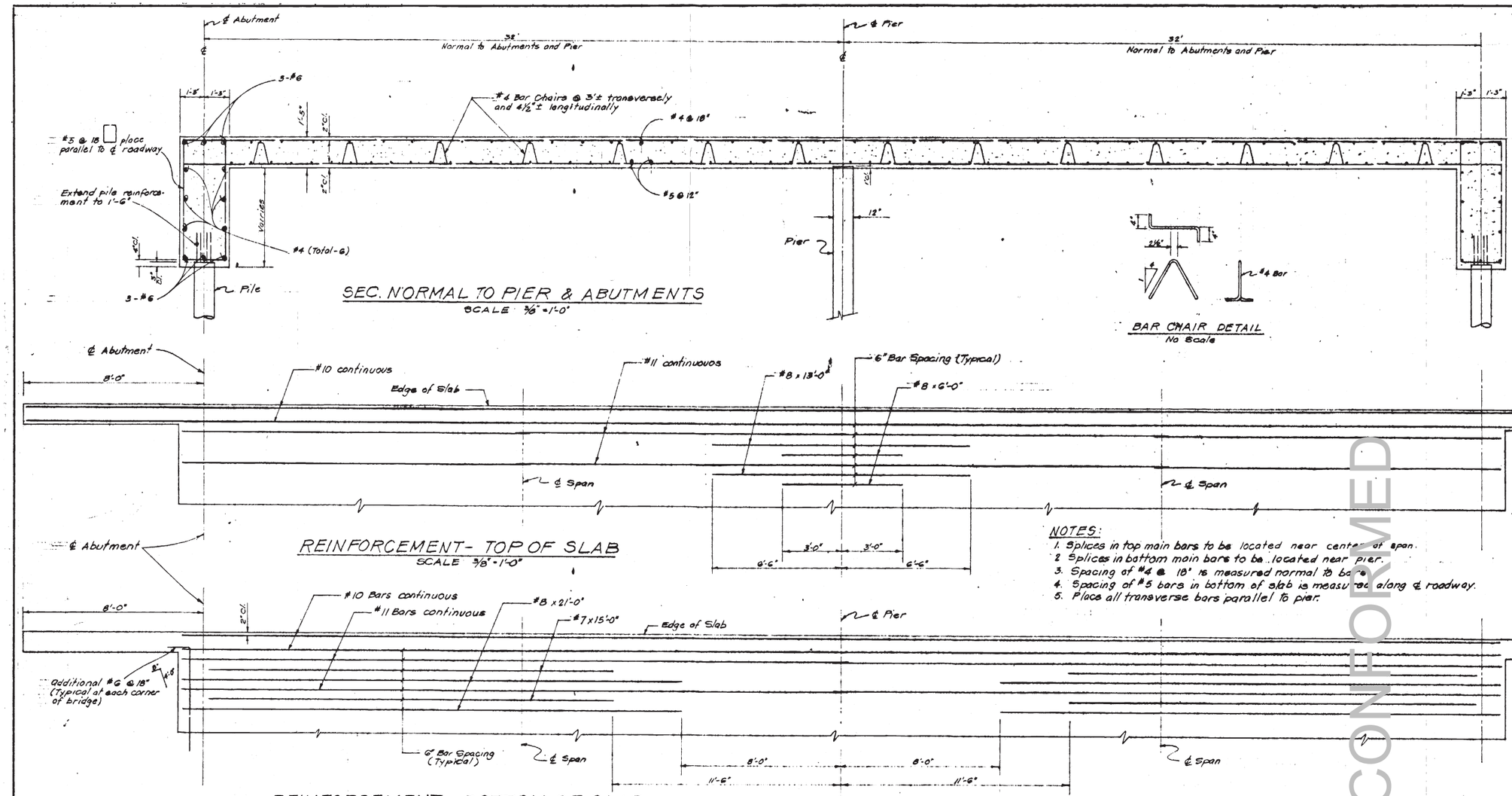

BAR CHAIR DETAIL
No Scale

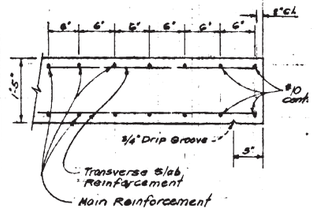

EDGE OF SLAB DETAIL
NO SCALE
(CURB & RAILING NOT SHOWN)

NOTES:
1. Splices in top main bars to be located near center of span.
2. Splices in bottom main bars to be located near pier.
3. Spacing of #4 @ 18" is measured normal to bars.
4. Spacing of #5 bars in bottom of slab is measured along ℄ roadway.
5. Place all transverse bars parallel to pier.

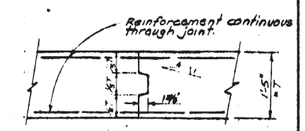

LONGITUDINAL SLAB CONST. JOINT
NO SCALE

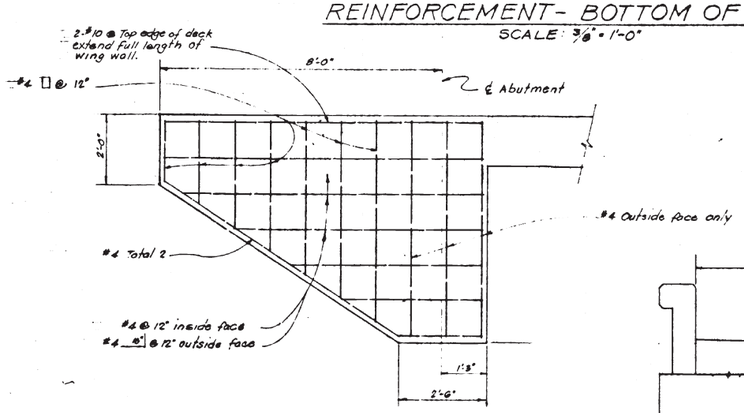

WINGWALL ELEVATION
SCALE ½"=1'-0"

BAR SPLICE LENGTH

Bar Size	#4	#5	#6	#7	#8	#9	#10	#11
Typical Bar	18"	23"	27"	32"	36"	41"	51"	57"
Top bars in main span	26"	32"	38"	45"	51"	58"	72"	80"

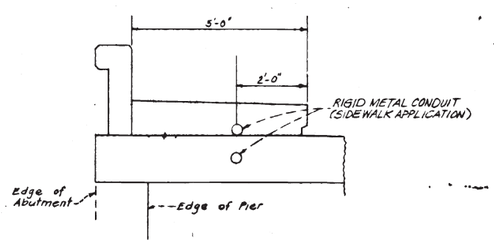

TYPICAL CONDUIT LOCATION
NOT TO SCALE

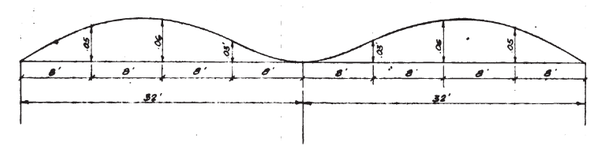

CAMBER DIAGRAM
TOTAL SLAB DEFLECTION DUE TO DEAD LOADS

Total deflection will be reached about 4 years after falsework removal. For values at time of falsework removal divide those shown by 4.
The amount of camber for construction will be determined by the Engineer.

CONFORMED

APPROVED: Wesley D. Smith
FILE NUMBER: C-325

BISSELL & KARN, INC.
CIVIL ENGINEERS
2551 MERCED STREET · SAN LEANDRO, CALIFORNIA · 94577 · (415) 483-2170

GENERAL BRIDGE DETAIL

LOCAL IMPROVEMENT DISTRICT NO. 4
MILPITAS — CALIFORNIA
APPROVED: [signature] REG. CIVIL ENGINEER NO. 9221
DATE: MAY 16, 1972 JOB NO. 5194

SCALE	DATE	DRAWN	CHECKED
AS NOTED	3/14/72	E.I.T.	LL/R.C.

REVISIONS

SHEET NO. 29 OF 93 SHEETS

AS-BUILT

AS-BUILT

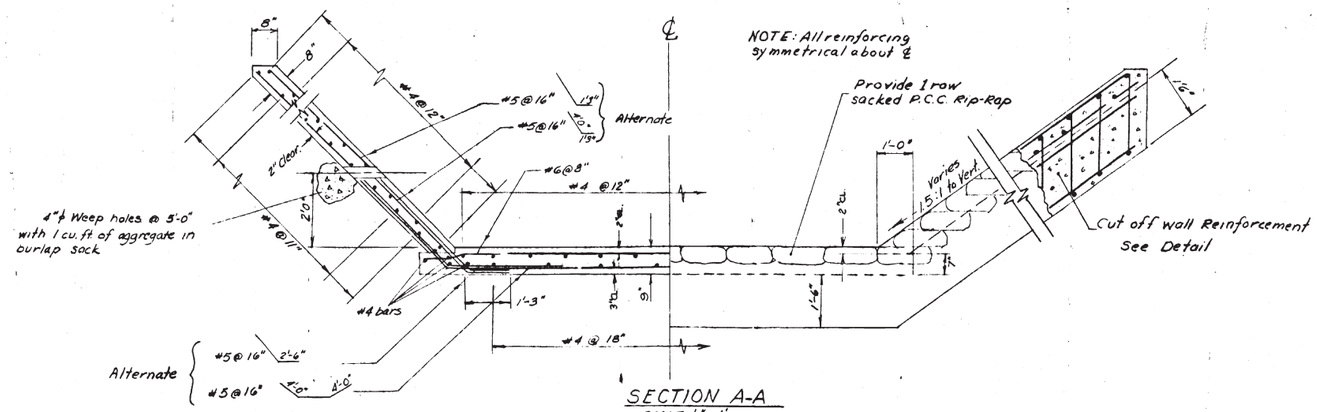

SECTION A-A
SCALE: 1/2" = 1'

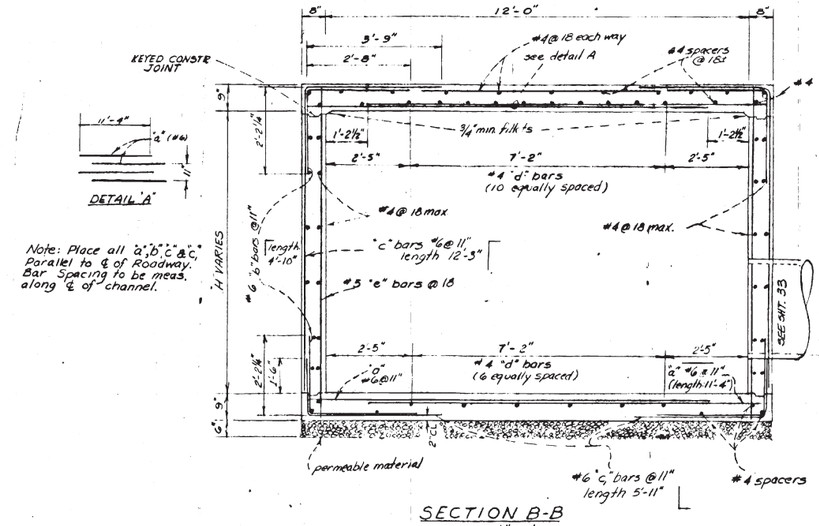

Note: Place all "a", "b", "c" & "e" Parallel to ℄ of Roadway. Bar Spacing to be meas. along ℄ of channel.

SECTION B-B
SCALE: 1/2" = 1'

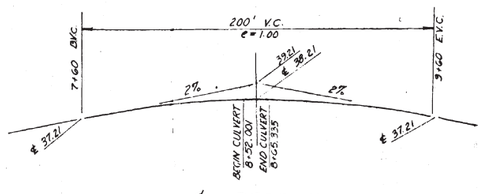

℄ PROFILE
"A" STREET
NO SCALE

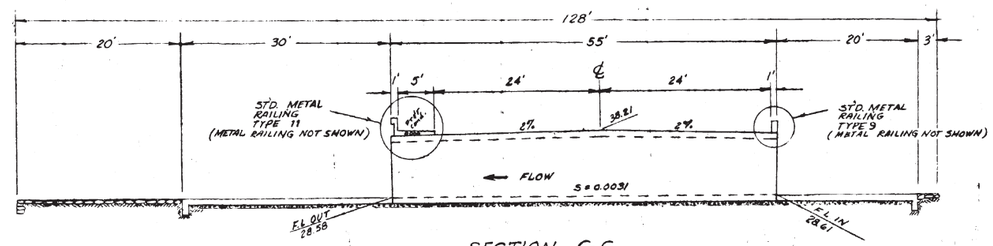

SECTION C-C
SCALE: 1" = 10'

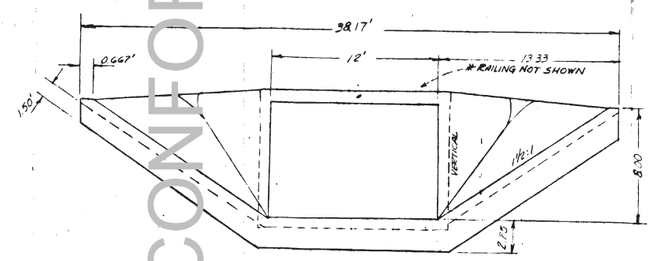

SECTION D-D
SCALE: 1" = 5'

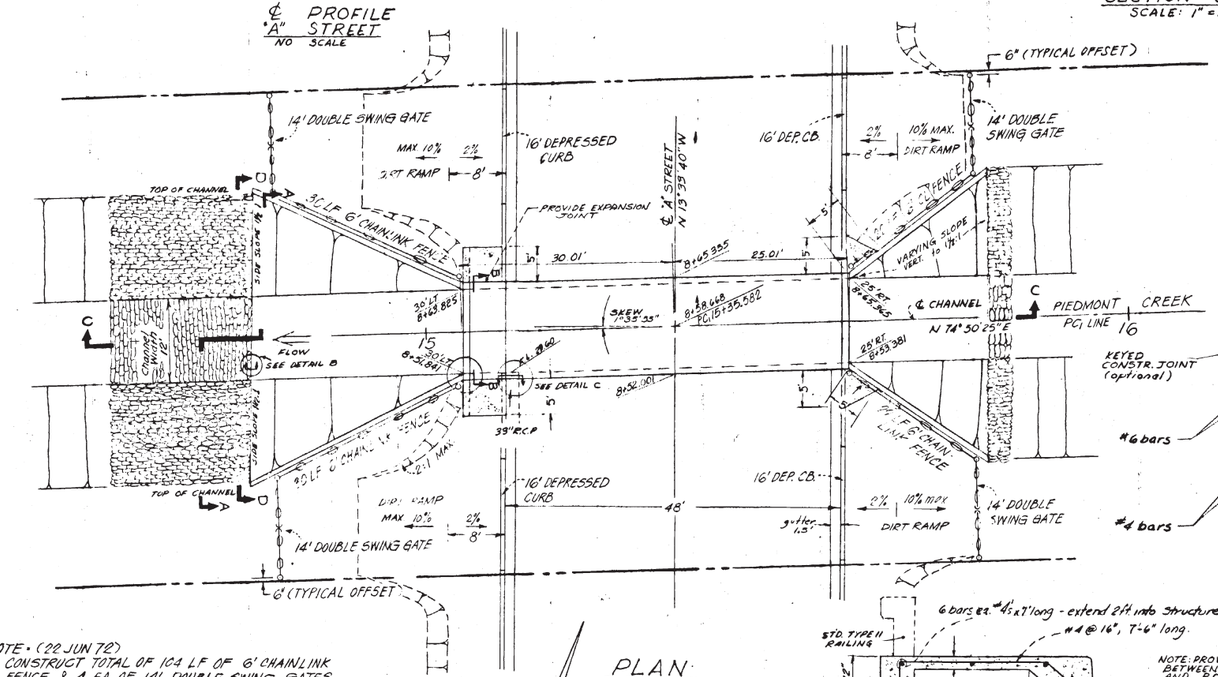

PLAN
SCALE 1" = 10'

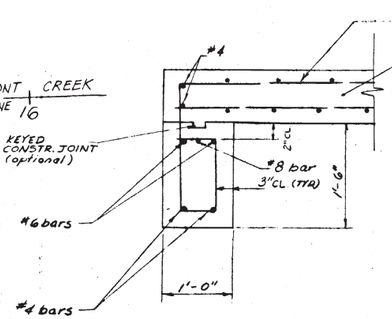

DETAIL B
SCALE 1" = 1'-0"
CUT OFF WALL

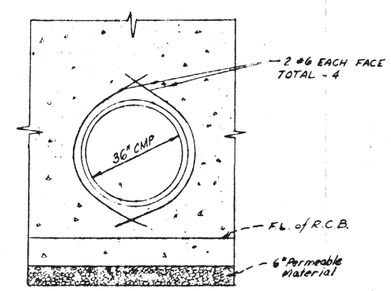

DETAIL C
SCALE 1/2" = 1'

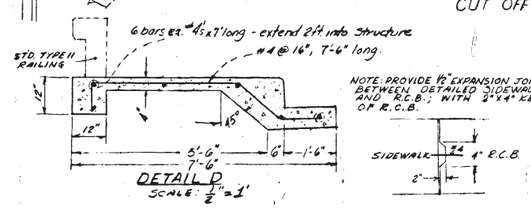

NOTE: PROVIDE 1/2" EXPANSION JOINT MATERIAL BETWEEN DETAILED SIDEWALK @ LEFT AND R.C.B.; WITH 2"x4" KEY @ FACE OF R.C.B.

DETAIL D
SCALE: 1/2" = 1'

NOTE: (22 JUN 72)
CONSTRUCT TOTAL OF 104 LF OF 6' CHAINLINK FENCE & 4 EA OF 14' DOUBLE SWING GATES.

CONSTRUCT 4 EA 16' DEPRESSED CURBS & 4 EA GRADED DIRT RAMPS AS SHOWN.

NOTE: REFER CALIFORNIA STANDARD PLANS P93 "116-117 Jan. '71 Edition
- Metal Railing (Type 9) ..... 14 LF
- Metal Railing (Type 11) ..... 14 LF

R.C.B.
APPROXIMATE QUANTITIES

FINAL QUANTITIES
- Concrete Structure ..... 68 C.Y.
- Bar Reinforcing Steel ..... 13,630 LB
- Permeable Material ..... 12 C.Y.

CHANNEL
APPROXIMATE QUANTITIES
- Sacked P.C.C. ..... 24 C.Y.

FINAL QUANTITIES
- * Concrete Structure ..... 55.8 C.Y.
- Bar Reinforcing Steel ..... 9,700 LB
- Permeable Material ..... 14 C.Y.

* Includes slope protection & additional sidewalk as shown

Note: The Final R.C.B. Quantities include railing and sidewalk over the structure

APPROVED: [signature]
FILE NUMBER: 2-325

CONFORMED

BISSELL & KARN, INC.
CIVIL ENGINEERS
2551 MERCED STREET · SAN LEANDRO, CALIFORNIA · 94577 · (415) · 483-2170

SINGLE REINF. CONCRETE BOX CULVERT

LOCAL IMPROVEMENT DISTRICT NO. 4
MILPITAS — CALIFORNIA

APPROVED: [signature] REG. CIVIL ENGINEER NO. 3821
DATE: MAY 16, 1972 JOB NO. 5194

SCALE	DATE	DRAWN	CHECKED
AS NOTED		M.T.S.	R.J.C.

REVISIONS: 22 JUN 72 - 4 W.L.

SHEET NO. 30 OF 33 SHEETS

AS-BUILT

AS-BUILT

Appendix J

Channel Improvements – Construction and Maintenance Agreement

CONFORMED

UP Folder No.: 02967-19

CHANNEL IMPROVEMENT
CONSTRUCTION & MAINTENANCE AGREEMENT

Mile Post: 10.7 to 11.7, Opposite Railroad's Milpitas Industrial Lead
Location: Milpitas, Santa Clara County, California

THIS CHANNEL IMPROVEMENT CONSTRUCTION & MAINTENANCE AGREEMENT (this "**Agreement**") is made and entered into as of the 27th day of May, 2016 (the "**Effective Date**") by and among **UNION PACIFIC RAILROAD COMPANY**, a Delaware corporation, ("**Railroad**"), **STANDARD REALTY AND DEVELOPMENT COMPANY**, a California corporation ("**Standard**") and **SANTA CLARA VALLEY WATER DISTRICT**, a special district created by the California legislature (the "**District**").

RECITALS:

A. Standard is a wholly owned subsidiary of Railroad.

B. In connection with the District's Berryessa Creek Flood Risk Management Project, the District desires to construct and maintain certain channel improvements (the "**Project**") in the area generally located between East Calavares Boulevard and Montague Expressway in Milpitas, Santa Clara County, California, at or near Railroad's Mile Post 10.7 to Mile Post 11.7 opposite Railroad's Milpitas Industrial Lead, as such Project area is generally depicted on the print marked **Exhibit "A"** attached hereto (the "**Project Area**").

C. Pursuant to that certain (i) Grant of Easement dated November 2, 1978, between Standard and the District and (ii) Grant of Easement dated November 21, 1978, between Standard and the District (collectively, the "**Existing Standard Easement Deeds**"), the District has an easement (the "**Existing Standard Easement**") in, upon, over and across certain property located within the Project Area and owned by Standard for the purposes of flood control and/or storm water drainage, as such property is more particularly described in the Existing Standard Easement Deeds (the "**Existing Standard Easement Property**").

D. Pursuant to that certain (i) Deed dated April 7, 1955, among Francis L. Wrigley and Beatrice C. Wrigley, as predecessors in interest to Railroad, and the District and (ii) Deed dated March 15, 1955, between The Western Pacific Railroad Company, as predecessor in interest to Railroad, and the District (collectively, the "**Existing Railroad Easement Deeds**" and together with the Existing Standard Easement Deeds, collectively, the "**Existing Easement Deeds**"), the District has an easement (the "**Existing Railroad Easement**" and together with the Existing Standard Easement, collectively, the "**Existing Easements**") allowing certain uses along and across certain property located within the Project Area and owned by Railroad, as such property is more particularly described in the Existing Railroad Easement Deeds (the "**Existing**

CONFORMED

Railroad Easement Property" and together with the Existing Standard Easement Property, the "**Existing Easement Property**").

E. In addition to the Existing Easements and in connection with the Project, the District desires new easement rights on, over and across certain real property located within the Project Area and owned by either Standard or Railroad (collectively, the "**New Easement Property**" and together with the Existing Easement Property, the "**Easement Property**").

F. The District also desires that the United States Army Corps of Engineers ("**USACE**") be a permitted user of certain of the Districts rights to use the Easement Property.

G. Railroad is a "rail carrier" (as defined in 49 U.S.C. §10102(5) under the Interstate Commerce Commission Termination Act of 1995).

I. As part of the Project, certain improvements/replacements are being made to Railroad's (i) Piedmont Bridge (the "**Piedmont Structure**") at the location generally depicted on the print attached hereto as **Exhibit "A-1-X"** and (ii) trestle bridge (the "**Trestle Structure**") at the location generally depicted on the print attached hereto as **Exhibit "A-1-Y"**.

J. Pursuant to the terms and conditions of this Agreement, Standard and Railroad, as applicable, are agreeable to grant the District easement and temporary license rights on, over and across the New Easement Property and Temporary License Area (defined below), respectively, for the purposes set forth in Article 1 below and to amend and restate the Existing Easement Deeds in their entirety, such that the Existing Easement Deeds will be subject to this Agreement and the terms and conditions of the form of amended and restated deed described herein, to update and accurately reflect the purposes of said deeds in connection with the Project.

AGREEMENT:

NOW, THEREFORE, IT IS AGREED by and between the parties hereto as follows:

Article 1. **GRANT OF EASEMENTS AND TEMPORARY LICENSE.**

A. For and in consideration of Four Hundred Twenty-Five Thousand Seven Hundred-Seventy and 10/100 Dollars ($425,770.10) to be paid by the District to Railroad upon the execution of this Agreement, and in further consideration of the District's agreement to perform and comply with the terms of this Agreement, Railroad, as of the Effective Date, shall execute and deliver to District, and District shall accept, a channel improvement easement deed in the form marked **Exhibit "F"**, attached hereto, granting the District a non-exclusive, perpetual and assignable rights and easements on, over and across a portion of Railroad's real property shown and described on **Exhibit "A-2"**, attached hereto for the limited purposes of: (i) constructing, operating and maintaining channel improvement works, (ii) constructing, maintaining and using an access road in accordance with the Plans (defined below), (iii) clearing, cutting, felling, removing and disposing of timber, trees, underbrush, buildings and/or other improvements from such real property that impede or obstruct the flow of flood waters, and (iv) excavating, dredging, cutting away and removing land and placing dredge or spoil material on

CONFORMED

such real property in accordance with the Plans and for no other purpose; in each case reserving, however, to Railroad and its successors and assigns, all such rights and privileges in the real property as may be used without interfering with or abridging the rights and easements contemplated hereunder.

B. For and in consideration of Forty-Four Thousand Five Hundred Fifty-Six and 92/100 Dollars ($44,556.92) to be paid by the District to Standard upon the execution of this Agreement, and in further consideration of the District's agreement to perform and comply with the terms of this Agreement, Standard, as of the Effective Date, shall execute and deliver to District, and District shall accept, channel improvement easement deeds in the form marked **Exhibit "F"**, attached hereto, granting the District a non-exclusive, perpetual and assignable rights and easements on, over and across a portion of Standard's real property shown and described on **Exhibit "A-3"** (East Calaveras Boulevard), **Exhibit "A-4"** (Los Coches Street), **Exhibit "A-5"** (Yosemite Drive), **Exhibit "A-6"** (APN No. 086-30-028) and **Exhibit "A-7"** (Montague Expressway), respectively, attached hereto for the limited purposes of: (i) constructing, operating and maintaining channel improvement works, (ii) with respect to the real property described on **Exhibit "A-6"** only, constructing, maintaining and using an access road in accordance with the Plans (defined below), (iii) clearing, cutting, felling, removing and disposing of timber, trees, underbrush, buildings and/or other improvements from such real property that impede or obstruct the flow of flood waters, and (iv) excavating, dredging, cutting away and removing land and placing dredge or spoil material on such real property in accordance with the Plans and for no other purpose; in each case reserving, however, to Standard and its successors and assigns, all such rights and privileges in the real property as may be used without interfering with or abridging the rights and easements contemplated hereunder.

C. For good and valuable consideration, the receipt and sufficiency of which are hereby acknowledged, and in further consideration of the District's agreement to perform and comply with the terms of this Agreement, Standard agrees to grant to the District and the District thereby agrees to accept a non-exclusive, revocable license (the "**License**") to enter upon the property depicted on **Exhibit "A-8"** (the "**Temporary License Area**"**),** for the sole purpose of performing the grading work required to be performed in connection with the Project Work (defined below), and as shall be more particularly shown on the Plans. The District's use of the License shall be subject to this Agreement. The License shall commence on the Effective Date and shall automatically terminate on the earlier to occur of (i) completion of such grading work and (ii) eighteen (18) months after the Effective Date.

D. For good and valuable consideration, the receipt of which is hereby acknowledged, and in further consideration of the District's agreement to perform and comply with terms of this Agreement, Railroad, as of the Effective Date, shall execute and deliver to the District, and the District shall accept, an amended and restated easement deed in the form marked **Exhibit "G"**, attached hereto, amending and restating each of the Existing Railroad Easement Deeds in their entirety.

E. For good and valuable consideration, the receipt of which is hereby acknowledged, and in further consideration of the District's agreement to perform and comply with terms of this Agreement, Standard, as of the Effective Date, shall execute and deliver to the

CONFORMED

District, and the District shall accept, an amended and restated easement deed in the form marked **Exhibit "G"**, attached hereto, amending and restating each of the Existing Standard Easement Deeds in their entirety.

F. For the avoidance of doubt and without limiting any provisions contained in this Agreement, the District shall obtain (and shall be responsible for obtaining on behalf of USACE and/or any Contractor) prior approval from Railroad, which approval shall not be unreasonably withheld, before commencing any Project Work or, except as expressly provided herein, the performance of any activity or work in which any person or equipment will be within twenty-five (25) feet of any Railroad track or other Railroad facilities, as required in Exhibit B, Section 5 of this Agreement.

G. The District shall not permit any cut vegetation or cleared debris to be abandoned in place or dumped on the Easement Property or other property of Railroad or Standard.

H. The District shall not permit the Easement Property to be used for any type of recreational road, path, trail, or any access of any kind by members of the public.

Article 2. PROJECT WORK; DISTRICT TO BEAR ENTIRE EXPENSE AND WORK RESPONSIBILITY.

A. Except as limited in this Section, any Project work performed in connection with this Agreement is collectively referred to herein as the "**Project Work**". The parties acknowledge and agree that any Project Work to be performed in connection with the initial construction of the Project, without regard to whether such work is performed on the Easement Property, Temporary License Area or in the vicinity of Railroad's operations and facilities, shall be subject to the terms and conditions of this Agreement. After the District completes the Project Work related to the initial construction of the Project in accordance with the Plans (and UP has reviewed and approved the same), the term "Project Work" shall only apply to any Project improvements installed (at any time) on the Easement Property, and the District's rights and obligations under this Agreement shall be limited to those that arise from or are related to the rights granted to the District in the Easement Property. Notwithstanding the foregoing, the District shall remain responsible after completion of the Project Work in accordance with the Plans (and UP has reviewed and approved the same) for any obligations or liabilities related to (i) any Project Work improvements installed outside of the Easement Property that accrue prior to UP's review and approval of the same and (ii) the Deferred Construction obligations included in Article 4 below.

B. Railroad has no duty or obligation to construct, reconstruct, inspect, maintain, repair, renew, or operate the Project improvements or perform any Project Work. The District shall bear the sole and entire responsibility to perform all necessary and appropriate Project Work. Project Work does not include Railroad Work (as defined below).

C. Railroad has no duty or obligation to contribute money, labor or other resources towards the construction, reconstruction, inspection, maintenance, repair, renewal or operation of the Project improvements or any Project Work. Unless otherwise provided herein, the District

CONFORMED

shall bear the entire cost and expense incurred in connection with the Project and all Project Work, along with all Reimbursable Costs (as defined below).

D. At the District's sole expense, Railroad agrees to perform track replacement and certain road work (the "**Railroad Work**") in connection with District's performance of the Project Work (as more particularly described in the Estimate (defined below)).

E. The District agrees to pay Railroad all actual costs and expenses incurred by Railroad in connection with the Railroad Work (the "**Reimbursable Costs**"), including without limitation, any and all actual costs and expenses in connection with the labor, materials, supplies, transportation, insurance and direct and indirect overhead charges (including standard additive rates) properly allocable to the Project, supervision, engineering review, inspection, flagging and other protective services, surveys, permits, and rental of tools, equipment and machinery, together with any other items of expense incurred by Railroad in performing the Railroad Work. The standard additive rates shall be subject to upward or downward adjustment based on industry standards and practices, and the District acknowledges and agrees that any such adjustment to standard additive rates may be made retroactively. Notwithstanding any provision contained herein to the contrary, any and all costs associated with reinstalling tracks on the Piedmont Structure by Railroad shall be at the sole cost and expense of Railroad and shall not be deemed a Reimbursable Cost (it being understood, for the avoidance of doubt, that the District will be responsible for all other work (and expenses) relating to the replacement of the Piedmont Structure as will be set forth in the Plans).

F. The District shall pay all invoices submitted by Railroad for Reimbursable Costs within sixty (60) days after the District's receipt of billing from Railroad. If the District disputes any portion of the invoiced costs, District's time to make such payments shall be tolled (with respect only to the disputed portion) while any judicial proceeding or alternative dispute resolution procedure agreed to by the parties is pending. Railroad agrees to provide as much supporting documentation as is customarily provided by Railroad for projects of this type.

G. The Railroad Work to be performed by Railroad in connection with the Project is described on Railroad's Material Force Account Estimate dated May 20, 2016 and corresponding summary estimate on **Exhibit "H"** attached hereto (collectively, the "**Estimate**").

H. Railroad, if it so elects, may recalculate and update the Estimate in the event the Project and the work contemplated thereunder to be performed in connection with the Project does not commence within six (6) months after the date of the Estimate. The District acknowledges that the Estimate may not include any estimate of flagging or other protective service costs that are to be paid by the District or the Contractor (defined below) in connection with flagging or other protective services provided by Railroad in connection with the Project. All of such costs incurred by Railroad are to be paid by the District or the Contractor as determined by Railroad and the District. If it is determined that Railroad will be billing the Contractor directly for such costs, the District agrees that it will pay Railroad for any flagging costs that have not been paid by the Contractor within thirty (30) days after the Contractor's receipt of billing.

CONFORMED

Article 3. **TERMS, CONDITIONS, AND EXHIBITS.**

A. Exhibits "A", "A-1", "A-2", "A-3", "A-4", "A-5", "A-6", "A-7", "A-8", "B", C", "D", "E", "F", "G" and "H" attached hereto, are hereby made a part of this Agreement.

1) Exhibit "A" is a print showing the Project Area.
2) Exhibit "A-1-X" is a print showing the general location of the Piedmont Structure.
3) Exhibit "A-1-Y" is a print showing the general location of the Trestle Structure.
4) Exhibit "A-2" is a print showing the Railroad Easement Area (APN Nos. 086-32-021 and 086-32-028).
5) Exhibit "A-3" is a print showing the Standard Easement Area (East Calaveras Boulevard).
6) Exhibit "A-4" is a print showing the Standard Easement Area (Los Coches Street).
7) Exhibit "A-5" is a print showing the Standard Easement Area (Yosemite Drive).
8) Exhibit "A-6" is a print showing the Standard Easement Area (APN No. 086-30-028).
9) Exhibit "A-7" is a print showing the Standard Easement Area (Montague Expressway).
10) Exhibit "A-8" is a print showing the Temporary License Area
11) Exhibit "B" are additional terms and conditions.
12) Exhibit "C" is Railroad's current form of Contractor's Right of Entry Agreement.
13) Exhibit "D" are insurance requirements.
14) Exhibit "E" are special safety requirements.
15) Exhibit "F" is a form of Easement Deed.
16) Exhibit "G" is a form of Amended and Restated Easement Deed.
17) Exhibit "H" is the Estimate.

B. District's use of the Easement Property and Temporary License Area is subject to District's compliance with each and all of the terms and conditions set forth in this Agreement.

Article 4. **DEFERRED CONSTRUCTION.**

The District acknowledge that conditions associated with the Project or Project Work may cause the complete stabilization (seasoning) of Railroad's track and related facilities to be deferred beyond the time of the Project or work associated therewith, and that Railroad's operations over track and related facilities in the vicinity of the Project during seasoning periods will impose extraordinary maintenance costs, in the event of caving, sliding, slipping, sinking, failure, deterioration, consolidation or settling of track or related facilities, including without limitation damage to embankments, subgrade, roadbed, rip-rapping, and track alignment, as well as failure, deterioration, settlement and consolidation of tracks or ballast, until a seasoning period is complete. Therefore, the District will pay to Railroad, as a part of the consideration for this Agreement, all actual costs of extraordinary maintenance (hereinafter referred to as **"Deferred Construction**") associated with the Project and Project Work, and attributed to caving, sliding, slipping, sinking, failure, deterioration, consolidation or settling of track or related railroad facilities in the vicinity of the Project Work which occurs during the time period commencing

CONFORMED

immediately following completion of the Project Work and ending two (2) years thereafter, whether completed by Railroad or Railroad's contractor. Railroad's costs of Deferred Construction which the District shall reimburse are the extra actual costs, in excess of normal maintenance costs, of maintaining track and related facilities in accordance with Railroad's standards or American Railway Engineering and Maintenance of Way Association ("**AREMA**") standards, and will include, without limitation, the costs of aligning and surfacing rail and adding ballast and other stabilizing materials. As a condition of reimbursement, Railroad shall provide the District with thirty days' advance written notice prior to commencing such work and shall provide an estimate of the anticipated costs, unless in the event of any emergency in which case Railroad shall provide such notice as soon as is reasonably practicable under the circumstances.

Article 5. **TERM; TERMINATION.**

A. This Agreement shall commence on the Effective Date and, unless sooner terminated as set forth in Paragraphs (B) and (C) below, shall continue in full force and effect as long as the Project improvements remain on the Easement Property.

B. If the District defaults in the performance of any material term or condition herein stated for a period of sixty (60) days after written notice to cure is given by the Railroad and/or Standard to the District specifying such default, the Railroad and Standard may, at their option, terminate this Agreement upon a final judicial determination of District's breach of this Agreement and, with respect to any such judicial determination relating to the New Easement Property, terminate the Easement Deed related thereto (provided, for the avoidance of doubt, that such express termination right for the New Easement Property shall not construed to limit the Railroad's or Standard's rights and remedies available to it under applicable law to enforce any defaults with respect to the Existing Railroad Easement Deeds or Existing Standard Easement Deeds).

C. If the Project Work is not substantially completed on the Easement Property within three (3) years after the Effective Date, the Railroad may, at its option, forthwith and immediately terminate its obligations under this Agreement by providing ninety (90) days prior written notice to the District. Exercise of this termination provision shall not, by itself, terminate District's property rights to the New Easement Property. Upon written request of District, Railroad shall meet with District within sixty (60) days to discuss alternative solutions for Railroad to perform its obligations under this Agreement, but such performance shall be in the Railroad's sole and absolute discretion, and the Railroad shall be under no legal obligation to ultimately perform such obligations.

D. In the event this Agreement is terminated pursuant to section B above, then at the option of Railroad and Standard, the District may be required to promptly cause the Project improvements to be removed from the Easement Property and the Easement Property restored to AREMA and Railroad's standards, or to the condition they were in as of the Effective Date, in each case to the satisfaction of the Railroad. If the District fails to promptly cause performance of such removal and restoration, Railroad may elect to cause the removal and restoration, at the District's sole expense.

CONFORMED

E. Termination of this Agreement shall not affect any of the rights or obligations of the parties hereto which may have accrued, or liabilities, accrued or otherwise, which may have arisen prior thereto.

Article 6. DEFINITION OF THE DISTRICT AND CONTRACTOR.

A. For purposes of this Agreement, all references in this Agreement to the term "District" shall also include the District's contractors, and the subcontractors of such contractors, and its or their officers, agents and employees, and others acting under its or their authority.

B. For purposes of this Agreement, the term "Contractor" shall mean the independent contractor or independent contractors hired by the District or USACE to perform any Project Work on any portion of Project Area during initial construction of the Project (including the Easement Property and Temporary License Area), and shall also include the Contractor's subcontractors and the Contractor's and subcontractor's respective employees, officers and agents, and others acting under its or their authority. Following initial construction of the Project, this definition shall only apply to work performed on the Easement Property.

Article 7. CONTRACTOR.

A. Railroad and Standard hereby consent to permitting a Contractor (whether hired by the District or USACE) to perform the Project Work and allowing such Contractor onto the Easement Property and Temporary License Area, provided that prior to any Contractor entering onto either Standard's or Railroad's property, the District shall require each Contractor to:

1) execute with Railroad the Railroad's then current form of Contractor's Right of Entry Agreement;
2) obtain the insurance required in such Contractor's Right of Entry Agreement; and
3) provide such insurance policies, certificates, binders and/or endorsements to Railroad.

B. Railroad's current form of Contractor's Right of Entry Agreement is marked **Exhibit "C"** and attached to this Agreement. The District confirms that it will inform each Contractor (for avoidance of doubt, including without limitation, a Contractor hired by USACE, but excluding any employees of the District), and shall inform USACE, as applicable, that it shall require its respective Contractor, to execute such agreement and obtain the required insurance before entering on, or commencing any Project Work on either Standard's or Railroad's property. Under no circumstances will the Contractor be allowed on any property owned by Standard or Railroad without first executing the Contractor's Right of Entry Agreement and obtaining the insurance required therein and also providing to the Railroad the insurance policies, binders, certificates and/or endorsements described therein.

CONFORMED

C. All insurance correspondence, binders, policies, certificates and/or endorsements shall be sent to:

Union Pacific Railroad Company
Real Estate Department
1400 Douglas Street, Mail Stop 1690
Omaha, NE 68179-1690
Attn: UPRR Folder No. 02967-19

Article 8. USACE USE OF PREMISES.

A. Subject to conditions of this Agreement, Railroad and Standard, as applicable, hereby consent to the District permitting USACE to access the Easement Property as follows: (i) during the initial construction of the Project to monitor and supervise such construction performed pursuant to construction contracts awarded by USACE, (ii) after initial construction is completed, as required by USACE to comply with its generally applicable inspection obligations, to access the Easement Property to inspect the Project, and (iii) after initial construction is completed, in the event the District fails to timely perform its obligations to USACE (or as otherwise set forth herein) with respect to the Project, USACE (or its construction contractor) shall have the right to maintain, repair, renew, use, and operate the improvements installed on the Easement Property in connection with the Project and to otherwise satisfy the District's obligations herein.

B. Notwithstanding Railroad and Standard permitting USACE or any Contractor (including any USACE contractor) to perform any activities or work as set forth herein on the Easement Property or Temporary License Area, the District shall remain responsible for, and shall not be released from, its obligations under this Agreement, including but not limited to, any obligations related to USACE's and/or any Contractor's use of, or exercise of rights related to, the Easement Property or Temporary License Area.

C. It is understood by all parties to this Agreement that any and all communications with USACE Contractors shall be done through the USACE representatives identified in a written notice to be delivered to the District and Railroad by USACE.

Article 9. NO CONSENT OR PERMISSION TO CROSS TRACK.

This Agreement and any Railroad consent or permission stated herein does not permit the District, USACE and/or any Contractor to (A) cross any of Railroad's tracks (except at existing open public crossings) with vehicles, equipment, or machinery to access the Project Area; or (B) access or use any portion of Railroad's property or Standard's property other than the Easement Property or Temporary License Area. City, USACE and/or a Contractor shall be required to obtain a separate written crossing agreement directly with Railroad before crossing any such tracks with vehicles, equipment or machinery to perform the Project Work or to access the Project Area.

CONFORMED

Article 10. DOCUMENT PREPARATION FEE.

The District shall pay upon the execution and return of this Agreement, the nonrefundable sum of Twenty-Five Thousand and No/100 Dollars ($25,000.00) to cover Railroad's costs to prepare this Agreement.

Article 11. NO ADMISSION.

The parties are currently in a lease dispute involving property rights and/or facilities of the District commonly referred to as the Blue Hills pipeline (Railroad Folder No. 1608-75), together with any other disputes related thereto, collectively, the "Blue Hills Dispute." The parties agree that neither the settlement of the Blue Hills Dispute nor any provision of this Agreement shall be used or construed as precedent, a waiver of any argument, course of dealing between the parties, or admission of liability or wrongdoing against either party for any purpose (including without limitation, the valuation of any real estate interests involved in the Blue Hills Dispute or being granted herein). The parties also agree that this Agreement may not be submitted or used as evidence in any action or other proceeding for any purpose except in an action or proceeding to enforce or interpret the terms of this Agreement.

Article 12. MODIFICATION – ENTIRE AGREEMENT.

No waiver, modification or amendment of this Agreement shall be of any force or effect unless made in writing, signed by the District, Railroad and Standard and specifying with particularity the nature and extent of such waiver, modification or amendment. Any waiver by a party of any default by another party shall not affect or impair any right arising from any subsequent default. This Agreement (including the exhibits attached hereto and made a part hereof) constitutes the entire understanding between the District, Railroad and Standard with respect to the Project Work and cancels and supersedes any prior negotiations, understandings or agreements, whether written or oral with respect thereto.

Article 13. CHOICE OF LAW

This Agreement shall in all respects be interpreted, enforced, and governed by and under the laws of the State of California.

(Remainder of Page Intentionally Left Blank)

CONFORMED

IN WITNESS WHEREOF, the parties hereto have caused this Agreement to be executed effective as of the Effective Date.

UNION PACIFIC RAILROAD COMPANY, a Delaware corporation

By: _____
Renay J. Robison, Director – Real Estate

STANDARD REALTY AND DEVELOPMENT COMPANY, a California corporation

By: _____
Tony K. Love, Chairman and CEO

SANTA CLARA VALLEY WATER DISTRICT, a special district created by the California legislature

By: _____
Name: Norma J. Camacho
Title: Interim CEO

ATTEST: MICHELE L. KING, CMC

_____
Clerk/Board of Directors

CONFORMED

EXHIBIT A

TO CHANNEL IMPROVEMENT CONSTRUCTION & MAINTENANCE AGREEMENT

Project Area Print

(see attached)

CONFORMED

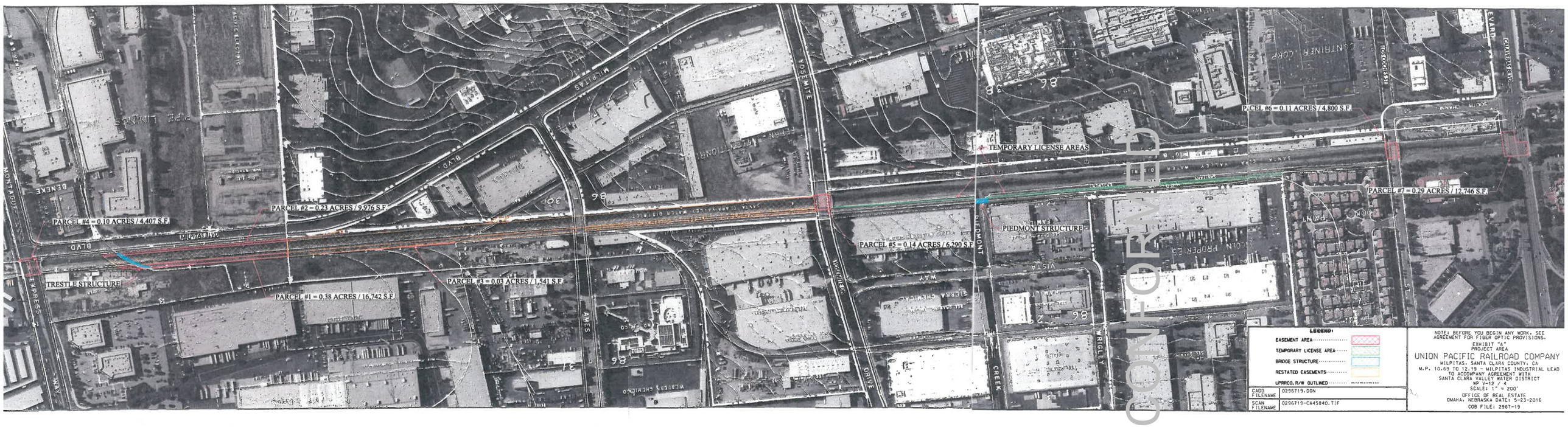
PARCEL #4 = 0.10 ACRES / 4,407 S.F.
PARCEL #2 = 0.23 ACRES / 9,976 S.F.
PARCEL #1 = 0.38 ACRES / 16,742 S.F.
PARCEL #3 = 0.03 ACRES / 1,541 S.F.
PARCEL #5 = 0.14 ACRES / 6,290 S.F.
PARCEL #6 = 0.11 ACRES / 4,800 S.F.
PARCEL #7 = 0.29 ACRES / 12,746 S.F.
TEMPORARY LICENSE AREAS
TRESTLE STRUCTURE
PIEDMONT STRUCTURE
MILPITAS BLVD
MONTAGUE
EXPRESS
WAY
AMES
ROSEMITE
PIEDMONT
CREEK
DRIVE
WRIGLEY
VISTA
SIERRA
WAY
CONTINENTAL CORP
LINCOLN PROPERTIES
SANTA CLARA VALLEY WATER DISTRICT
PACIFIC ELECTRIC
PIPE LINING
WESTERN CHEMICAL
LEGEND:
EASEMENT AREA
TEMPORARY LICENSE AREA
BRIDGE STRUCTURE
RESTATED EASEMENTS
UPRRCO. R/W OUTLINED
CADD FILENAME 0296719.DGN
SCAN FILENAME 0296719-CA45840.TIF
NOTE: BEFORE YOU BEGIN ANY WORK, SEE AGREEMENT FOR FIBER OPTIC PROVISIONS.
EXHIBIT "A"
PROJECT AREA
UNION PACIFIC RAILROAD COMPANY
MILPITAS, SANTA CLARA COUNTY, CA
M.P. 10.69 TO 12.19 - MILPITAS INDUSTRIAL LEAD
TO ACCOMPANY AGREEMENT WITH
SANTA CLARA VALLEY WATER DISTRICT
XP V-12 / 4
SCALE: 1" = 200'
OFFICE OF REAL ESTATE
OMAHA, NEBRASKA DATE: 5-23-2016
COB FILE: 2967-19

COMPLETE

EXHIBIT A-1-X

TO CHANNEL IMPROVEMENT CONSTRUCTION & MAINTENANCE AGREEMENT

General Location of Piedmont Structure

(see attached)

CONFORMED

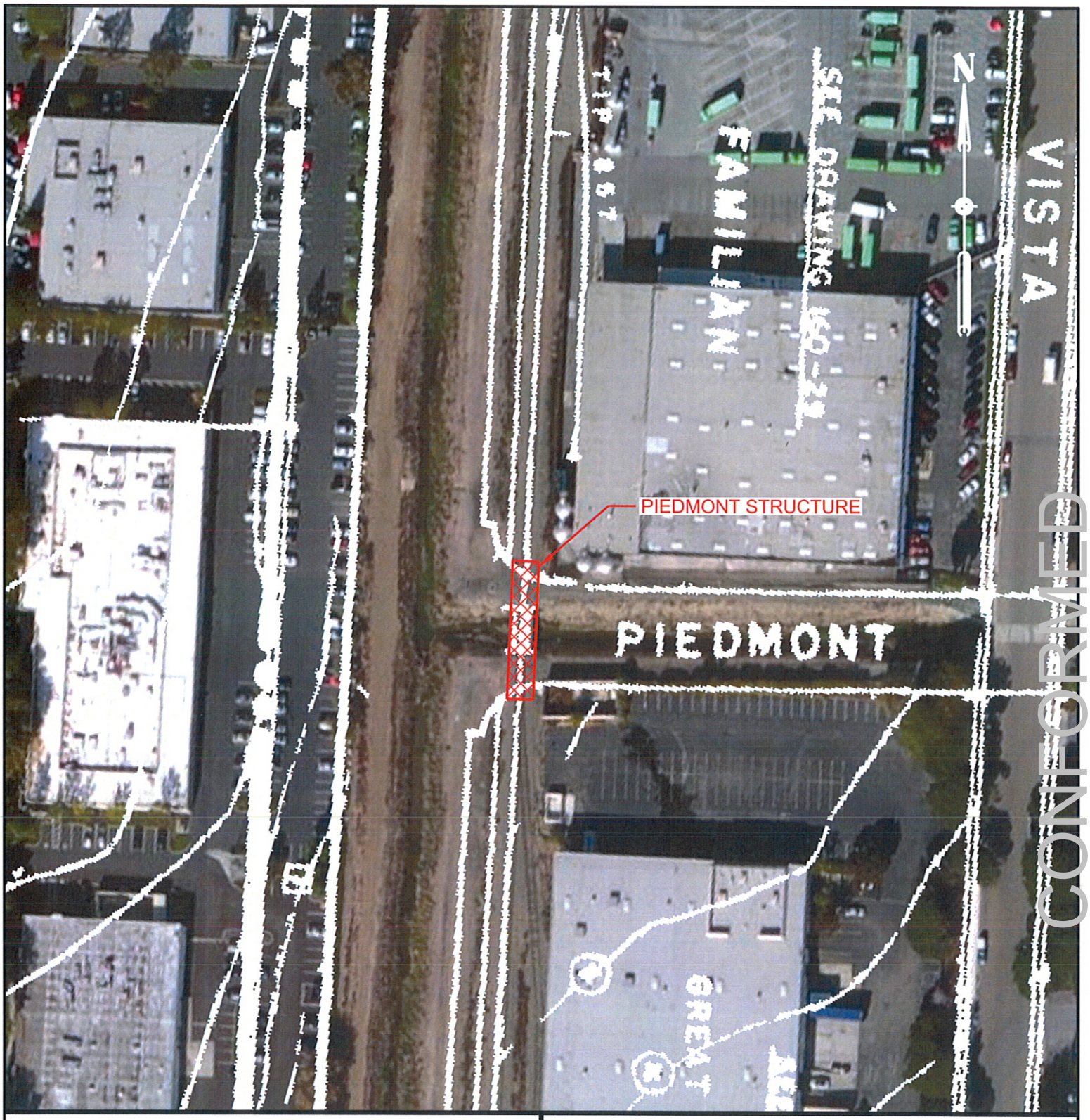

LEGEND:

BRIDGE STRUCTURE

UPRRCO. R/W OUTLINED

CADD FILENAME	0296719.DGN
SCAN FILENAME	0296719-CA45840.TIF

NOTE: BEFORE YOU BEGIN ANY WORK, SEE AGREEMENT FOR FIBER OPTIC PROVISIONS.

EXHIBIT "A-1-X"

UNION PACIFIC RAILROAD COMPANY

MILPITAS, SANTA CLARA COUNTY, CA

M.P. 11.23 - MILPITAS INDUSTRIAL LEAD

TO ACCOMPANY AGREEMENT WITH
SANTA CLARA VALLEY WATER DISTRICT
WP V-12 / 4
SCALE: 1" = 100'

OFFICE OF REAL ESTATE
OMAHA, NEBRASKA DATE: 5-18-2016

COB FILE: 2967-19

EXHIBIT A-1-Y

TO CHANNEL IMPROVEMENT CONSTRUCTION & MAINTENANCE AGREEMENT

General Location of Trestle Structure

(see attached)

CONFORMED

LEGEND:

BRIDGE STRUCTURE

UPRRCO. R/W OUTLINED

CADD FILENAME	0296719.DGN
SCAN FILENAME	0296719-CA45840.TIF

NOTE: BEFORE YOU BEGIN ANY WORK, SEE AGREEMENT FOR FIBER OPTIC PROVISIONS.

EXHIBIT "A-1-Y"

UNION PACIFIC RAILROAD COMPANY

MILPITAS, SANTA CLARA COUNTY, CA

M.P. 12.09 - MILPITAS INDUSTRIAL LEAD

TO ACCOMPANY AGREEMENT WITH
SANTA CLARA VALLEY WATER DISTRICT
WP V-12 / 4
SCALE: 1" = 100'

OFFICE OF REAL ESTATE
OMAHA, NEBRASKA DATE: 5-18-2016

COB FILE: 2967-19

EXHIBIT A-2

TO CHANNEL IMPROVEMENT CONSTRUCTION & MAINTENANCE AGREEMENT

Legal description and depiction of Railroad Easement Area
(APN Nos. 086-32-021 and 086-32-028)

(see attached)

CONFORMED

EXHIBIT A-2

SANTA CLARA VALLEY WATER DISTRICT
5750 Almaden Expressway
San Jose, CA 95118

Original By:	CLM	Revised By:	SJP
Date:	11/30/2015	Revision Date:	5/4/2016
PROJECT:	BERRYESSA CREEK	APN:	086-32-021 & 028
PROPERTY:	UNION PACIFIC RAILROAD CO.	RESC File No.:	401785

ALL THAT CERTAIN REAL PROPERTY SITUATE IN THE CITY OF MILPITAS, COUNTY OF SANTA CLARA, STATE OF CALIFORNIA, BEING A PORTION OF THE LANDS GRANTED TO WESTERN PACIFIC RAILROAD COMPANY (NOW KNOWN AS UNION PACIFIC RAIL ROAD COMPANY) PER THAT CERTAIN GRANT DEED RECORDED ON SEPTEMBER 13, 1951 IN BOOK 2282 OF OFFICIAL RECORDS AT PAGE 395, IN THE OFFICE OF THE RECORDER COUNTY OF SANTA CLARA, MORE PARTICULARLY DESCRIBED AS FOLLOWS:

PARCEL 1 – CHANNEL IMPROVEMENT EASEMENT:

COMMENCING AT THE NORTHEAST CORNER OF THE LANDS GRANTED TO THE WESTERN PACIFIC RAILROAD COMPANY (NOW KNOWN AS UNION PACIFIC RAILROAD COMPANY) PER THAT CERTAIN GRANT DEED RECORDED ON JUNE 18, 1951 AS DOCUMENT NUMBER 726399 OF OFFICIAL RECORDS, IN THE OFFICE OF THE RECORDER, COUNTY OF SANTA CLARA;

THENCE ALONG THE NORTHERLY LINE OF SAID LANDS, SOUTH 79°05'00" WEST, 154.59 FEET TO THE **POINT OF BEGINNING**;

THENCE LEAVING SAID NORTHERLY LINE OF SAID LANDS, SOUTH 11°50'30" EAST, 795.66 FEET TO THE A POINT ON THE NORTHWESTERLY LINE OF THAT CERTAIN EASEMENT GRANTED TO THE SANTA CLARA VALLEY WATER DISTRICT PER GRANT DEED RECORDED ON JANUARY 23, 1975 AS DOCUMENT NUMBER 4933884 OF OFFICIAL RECORDS, IN THE OFFICE OF THE RECORDER, COUNTY OF SANTA CLARA, SAID POINT ALSO BEING THE BEGINNING OF A NON-TANGENT CURVE TO THE RIGHT, HAVING A RADIUS OF 397.32 FEET, WHOSE CENTER BEARS NORTH 77°37'43" WEST.

THENCE SOUTHWESTERLY ALONG SAID CURVE AND THE NORTHERLY LINE OF SAID EASEMENT, THROUGH A CENTRAL ANGLE OF 3°18'23", FOR AN ARC LENGTH OF 22.93 FEET TO A POINT ON THE WESTERLY LINE OF SAID EASEMENT;

THENCE CONTINUING ALONG SAID WESTERLY LINE OF SAID EASEMENT, SOUTH 11°50'30" EAST,41.20 FEET TO A CURVE CONCENTRIC WITH AND DISTANT 25.00 FEET SOUTHEASTERLY FROM THE CENTERLINE OF THE U.P.R.R. TRACKS;

THENCE SOUTHWESTERLY ALONG SAID CURVE, BEING A NON-TANGENT CURVE TO THE RIGHT, HAVING A RADIUS OF 407.00 FEET, WHOSE CENTER BEARS NORTH 71°44'24" WEST, THROUGH A CENTRAL ANGLE OF 2°42'12" FOR AN ARC LENGTH OF 19.20 FEET TO A POINT ON THE EASTERLY LINE OF THAT CERTAIN EASEMENT GRANTED TO THE SANTA CLARA COUNTY FLOOD CONTROL AND WATER CONSERVATION DISTRICT (NOW KNOWN AS THE SANTA CLARA VALLEY WATER

CONFORMED

EXHIBIT A-2

DISTRICT) RECORDED ON APRIL 19, 1955 IN DOCUMENT NUMBER 1078042 OF OFFICIAL RECORDS, IN THE OFFICE OF THE RECORDER, COUNTY OF SANTA CLARA;

THENCE CONTINUING ALONG SAID EASTERLY LINE, NORTH 11°50'30" WEST, 874.19 FEET TO A POINT ON THE NORTHERLY LINE OF SAID LANDS;

THENCE CONTINUING ALONG SAID NORTHERLY LINE, NORTH 79°05'00" EAST, 20.02 FEET TO THE **POINT OF BEGINNING**.

CONTAINING 16,742 SQUARE FEET OF LAND, MORE OR LESS.

PARCEL 2 – CHANNEL IMPROVEMENT EASEMENT:

COMMENCING AT THE NORTHEAST CORNER OF THE LANDS GRANTED TO THE WESTERN PACIFIC RAILROAD COMPANY (NOW KNOWN AS UNION PACIFIC RAILROAD COMPANY) PER THAT CERTAIN GRANT DEED RECORDED ON JUNE 18, 1951 AS DOCUMENT NUMBER 726399 OF OFFICIAL RECORDS, IN THE OFFICE OF THE RECORDER, COUNTY OF SANTA CLARA;

THENCE ALONG THE NORTHERLY LINE OF SAID LANDS SOUTH 79°05'00" EAST, 234.63 FEET TO A POINT ON THE WESTERLY LINE OF THAT CERTAIN EASEMENT GRANTED TO THE SANTA CLARA FLOOD CONTROL AND WATER CONSERVATION DISTRICT (NOW KNOWN AS THE SANTA CLARA VALLEY WATER DISTRICT) RECORDED ON APRIL 19, 1955 IN DOCUMENT NUMBER 1078042 OF OFFICIAL RECORDS, IN THE OFFICE OF THE RECORDER, COUNTY OF SANTA CLARA AND BEING THE **POINT OF BEGINNING**.

THENCE ALONG SAID WESTERLY LINE, SOUTH 11°50'30" EAST, 948.05 FEET TO A CURVE CONCENTRIC WITH AND DISTANT 25.00 FEET SOUTHEASTERLY FROM THE CENTERLINE OF THE U.P.R.R. TRACKS;

THENCE SOUTHWESTERLY ALONG SAID CURVE, BEING A NON TANGENT CURVE TO THE RIGHT, HAVING A RADIUS OF 407.00 FEET, WHOSE CENTER BEARS NORTH 55°42'56" WEST, THROUGH A CENTRAL ANGLE OF 1°54'19" FOR AN ARC LENGTH OF 13.53 FEET TO A POINT ON THE EASTERLY LINE OF MILPITAS BOULEVARD;

THENCE CONTINUING ALONG SAID EASTERLY LINE OF MILPITAS BOULEVARD, NORTH 11°54'30" WEST, 957.44 FEET TO A POINT ON THE NORTHERLY LINE OF SAID LANDS;

THENCE CONTINUING ALONG SAID NORTHERLY LINE, NORTH 79°05'00" EAST, 11.03 FEET TO THE **POINT OF BEGINNING**.

CONTAINING 9,976 SQUARE FEET OF LAND, MORE OR LESS.

BASIS OF BEARING:

BEARINGS AND DISTANCES HEREIN ARE BASED ON THE CALIFORNIA COORDINATE SYSTEM OF 1983, ZONE 3. MULTIPLY HEREIN DESCRIBED DISTANCES BY 1.00006432 TO OBTAIN GROUND DISTANCES.

CONFORMED

EXHIBIT A-2

SURVEYOR'S STATEMENT:

THE DESCRIPTION WAS PREPARED BY ME OR UNDER MY DIRECTION IN CONFORMANCE WITH THE REQUIREMENTS OF THE LAND SURVEYOR'S ACT.

GISELA SILKE JOBST, L9169

5-25-2016
Date

LICENSED LAND SURVEYOR
GISELA SILKE JOBST
L9169
STATE OF CALIFORNIA

CONFORMED

EXHIBIT A-2

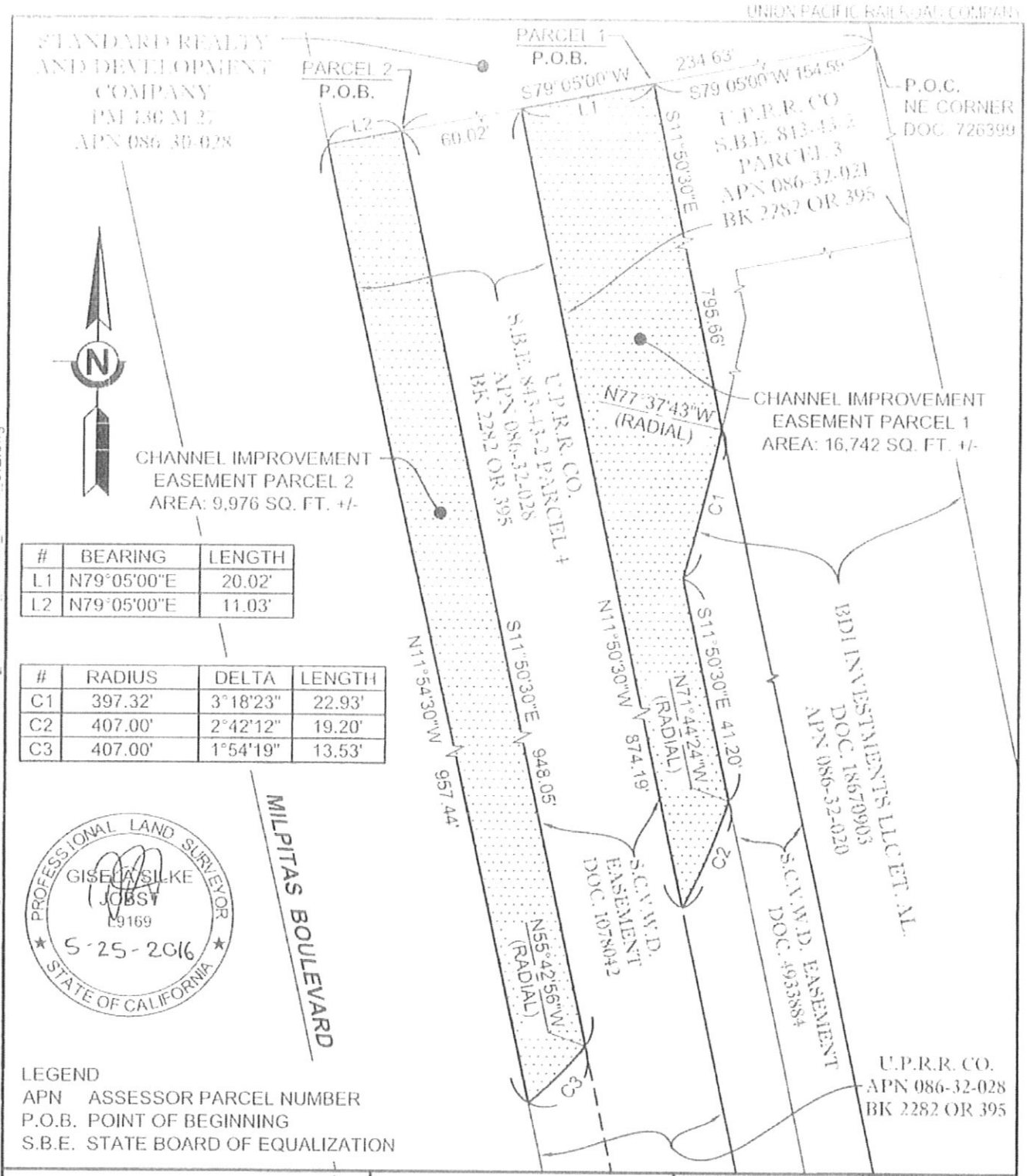

#	BEARING	LENGTH
L1	N79°05'00"E	20.02'
L2	N79°05'00"E	11.03'

#	RADIUS	DELTA	LENGTH
C1	397.32'	3°18'23"	22.93'
C2	407.00'	2°42'12"	19.20'
C3	407.00'	1°54'19"	13.53'

Santa Clara Valley Water District

SCALE: NOT TO SCALE

PROJ. NO.	4017
FILE NO.	85
APN	086-32-021 &028
TITLE REPORT NO.	0616013055-RR
DRAWN	CLM
DATE	11/30/15

REV.	APPR.	DATE	DESCRIPTION
1	SJP	5/4/16	MADE PARCEL 3 A STAND ALONE EASEMENT
2			

SCVWD W:\ROW\00PROJECTS\BERRYESSA CREEK\2016_054\AUTOCAD\CURRENT\2016_054PLAT_401785_UPRR_CIE.dwg

Sheet 1 of 1

CONFORMED

EXHIBIT A-3

TO CHANNEL IMPROVEMENT CONSTRUCTION & MAINTENANCE AGREEMENT

Legal description and depiction of Standard Easement Area
(East Calaveras Boulevard)

(see attached)

CONFORMED

EXHIBIT A-3

PARCEL 4 - CHANNEL IMPROVEMENT EASEMENT:
ALL THAT CERTAIN REAL PROPERTY SITUATE IN THE CITY OF MILPITAS, COUNTY OF SANTA CLARA, STATE OF CALIFORNIA, BEING A PORTION OF CALAVERAS BOULEVARD AS SHOWN ON THAT CERTAIN PARCEL MAP FILED ON JUNE 28, 1972 IN BOOK 303 OF MAPS AT PAGE 53, IN THE OFFICE OF THE RECORDER, COUNTY OF SANTA CLARA, MORE PARTICULARLY DESCRIBED AS FOLLOWS:

BEGINNING AT THE NORTHEAST CORNER OF THE LANDS OF THE SANTA CLARA COUNTY FLOOD CONTROL AND WATER CONSERVATION DISTRICT (NOW KNOWN AS THE SANTA CLARA VALLEY WATER DISTRICT) PER THAT CERTAIN GRANT DEED RECORDED ON MAY 10, 1972 AS DOCUMENT NUMBER 4253949 OF OFFICIAL RECORDS, IN THE OFFICE OF THE RECORDER, COUNTY OF SANTA CLARA, ALSO BEING A POINT ON THE SOUTH LINE OF CALAVERAS BOULEVARD;

THENCE ALONG SAID SOUTH LINE OF CALAVERAS BOULEVARD, SAID SOUTH LINE ALSO BEING THE NORTHERLY LINE OF SAID DOCUMENT NUMBER 4253949, SOUTH 74°36'19" WEST, 110.93 FEET TO THE BEGINNING OF A CURVE CONCAVE TO THE NORTH HAVING A RADIUS OF 10,062.00 FEET;

THENCE ALONG SAID CURVE AND SAID SOUTH LINE THROUGH A CENTRAL ANGLE OF 0°07'15", AN ARC LENGTH OF 21.22 FEET TO THE NORTHWEST CORNER OF SAID LANDS;

THENCE NORTH 12°34'52" WEST, 65.16 FEET TO A POINT ON THE SOUTH LINE OF THAT CERTAIN EASEMENT GRANTED TO THE SANTA CLARA COUNTY FLOOD CONTROL AND WATER CONSERVATION DISTRICT (NOW KNOWN AS THE SANTA CLARA VALLEY WATER DISTRICT) PER THAT CERTAIN GRANT DEED RECORDED ON APRIL 19, 1955 AS DOCUMENT NUMBER 1078041 OF OFFICIAL RECORDS, COUNTY OF SANTA CLARA;

THENCE ALONG SAID SOUTH LINE OF SAID EASEMENT, NORTH 75°28'48" EAST, 61.57 FEET TO THE SOUTHEAST CORNER OF SAID EASEMENT;

THENCE ALONG THE EAST LINE OF SAID EASEMENT NORTH 12°35'12" WEST, 60.13 FEET TO A POINT ON THE NORTH LINE OF CALAVERAS BOULEVARD, ALSO BEING THE SOUTH LINE OF THE LANDS GRANTED TO THE SANTA CLARA VALLEY WATER DISTRICT PER THAT CERTAIN GRANT DEED RECORDED ON JUNE 15, 1976 AS DOCUMENT NUMBER 5313086 OF OFFICIAL RECORDS, IN THE OFFICE OF THE RECORDER, COUNTY OF SANTA CLARA;
THENCE ALONG SAID NORTH LINE OF CALAVERAS BOULEVARD, NORTH 74°35'59" EAST, 70.55 FEET;

THENCE LEAVING SAID NORTH LINE, SOUTH 12°34'52" EAST, 124.39 FEET TO THE **POINT OF BEGINNING.**

CONTAINING 12,746 SQUARE FEET OF LAND, MORE OR LESS.

BASIS OF BEARING:
BEARINGS AND DISTANCES HEREIN ARE BASED ON THE CALIFORNIA COORDINATE SYSTEM OF 1983, ZONE 3.

CONFORMED

EXHIBIT A-3

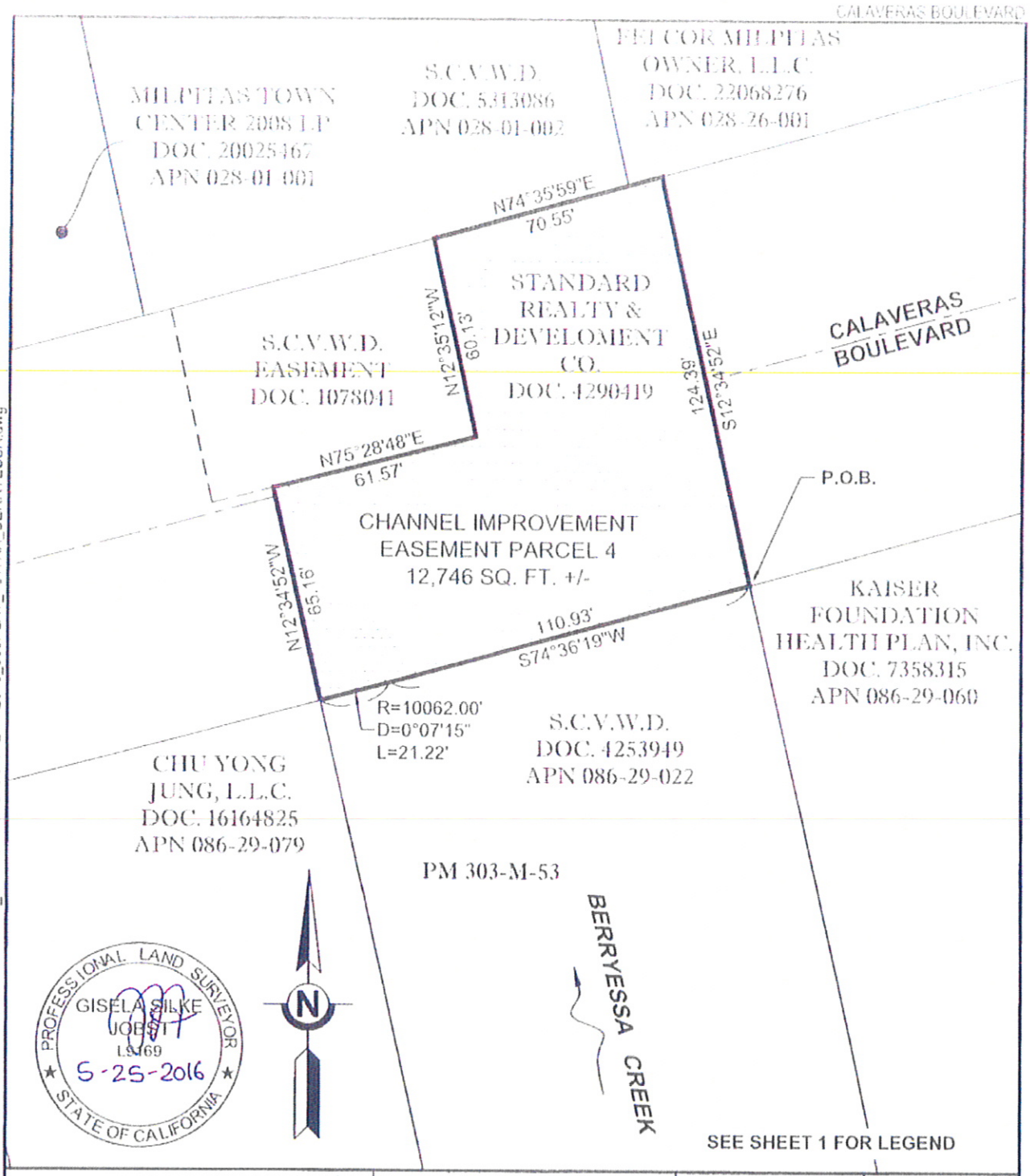

Santa Clara Valley Water District

SCALE: 1" = 40'

PROJ. NO.	4017
FILE NO.	89
APN	N/A
TITLE REPORT NO.	0616012500-RR
DRAWN	RPC
DATE	2/8/2016

REV.	APPR.	DATE	DESCRIPTION
1	SJP	5/04/16	MERGED 4017-80,82,88 AND 89 INTO SINGLE DOC.
2			

SCVWD W:\ROW\00PROJECTS\BERRYESSA CREEK\2016_009\AUTOCAD\CURRENT\2016_009PLAT_4017XX_BERRYESSA.dwg

CONFORMED

EXHIBIT A-4

TO CHANNEL IMPROVEMENT CONSTRUCTION & MAINTENANCE AGREEMENT

Legal description and depiction of Railroad Easement Area
(Los Coches Street)

(see attached)

CONFORMED

EXHIBIT A-4

SANTA CLARA VALLEY WATER DISTRICT
5750 Almaden Expressway
San Jose, CA 95118

Original By:	CLM	Revised By:	NIP
Date:	04/22/2015	Revision Date:	MAY 4, 2016
PROJECT:	BERRYESSA CREEK	APN:	N/A
PROPERTY:	STANDARD REALTY & DEV. CO.	RESU File No.:	1017.50182288.89

PARCEL 1 - CHANNEL IMPROVEMENT EASEMENT:

ALL THAT CERTAIN REAL PROPERTY SITUATE IN THE CITY OF MILPITAS, COUNTY OF SANTA CLARA, STATE OF CALIFORNIA, BEING A PORTION OF LOS COCHES STREET AS SHOWN ON THAT CERTAIN PARCEL MAP FILED ON JUNE 28, 1972 IN BOOK 303 OF MAPS AT PAGE 53, IN THE OFFICE OF THE RECORDER, COUNTY OF SANTA CLARA, MORE PARTICULARLY DESCRIBED AS FOLLOWS:

COMMENCING AT A POINT ON THE NORTH LINE OF LOS COCHES STREET (60 FEET WIDE), AS SHOWN ON SAID PARCEL MAP, SAID POINT ALSO BEING THE SOUTHWEST CORNER OF THAT CERTAIN LAND GRANTED TO THE SANTA CLARA VALLEY FLOOD CONTROL AND WATER CONSERVATION DISTRICT (NOW KNOWN AS THE SANTA CLARA VALLEY WATER DISTRICT) PER THAT CERTAIN GRANT DEED RECORDED ON MAY 10, 1972 AS DOCUMENT NUMBER 4253949 OF OFFICIAL RECORDS, IN THE OFFICE OF THE RECORDER, COUNTY OF SANTA CLARA;

THENCE ALONG SAID NORTH LINE OF LOS COCHES STREET (60 FEET WIDE), AS SHOWN ON SAID PARCEL MAP, ALSO BEING THE SOUTH LINE OF SAID LANDS OF SANTA CLARA VALLEY FLOOD CONTROL AND WATER CONSERVATION DISTRICT (NOW KNOWN AS THE SANTA CLARA VALLEY WATER DISTRICT), NORTH 75°56'48" EAST, 20.74 FEET TO THE **POINT OF BEGINNING**;

THENCE CONTINUING ALONG SAID NORTH LINE, NORTH 75°56'48" EAST, 80.00 FEET;

THENCE LEAVING SAID NORTH LINE, SOUTH 14°03'12" EAST, 60.00 FEET TO A POINT ON THE SOUTH LINE OF LOS COCHES STREET (60 FEET WIDE), AS SHOWN ON SAID PARCEL MAP, SAID LINE ALSO BEING THE NORTH LINE OF THE LANDS OF SANTA CLARA VALLEY FLOOD CONTROL AND WATER CONSERVATION DISTRICT (NOW KNOWN AS THE SANTA CLARA VALLEY WATER DISTRICT) PER THAT CERTAIN GRANT DEED RECORDED ON AUGUST 30, 1971 AS DOCUMENT NUMBER 4083033 OF OFFICIAL RECORDS, IN THE OFFICE OF THE RECORDER, COUNTY OF SANTA CLARA;

THENCE ALONG SAID SOUTH LINE, SOUTH 75°56'48" WEST, 80.00 FEET;

THENCE LEAVING SAID SOUTH LINE, NORTH 14°03'12" WEST, 60.00 FEET TO THE **POINT OF BEGINNING**.

CONTAINING 4,800 SQUARE FEET OF LAND, MORE OR LESS.

CONFORMED

EXHIBIT A-4

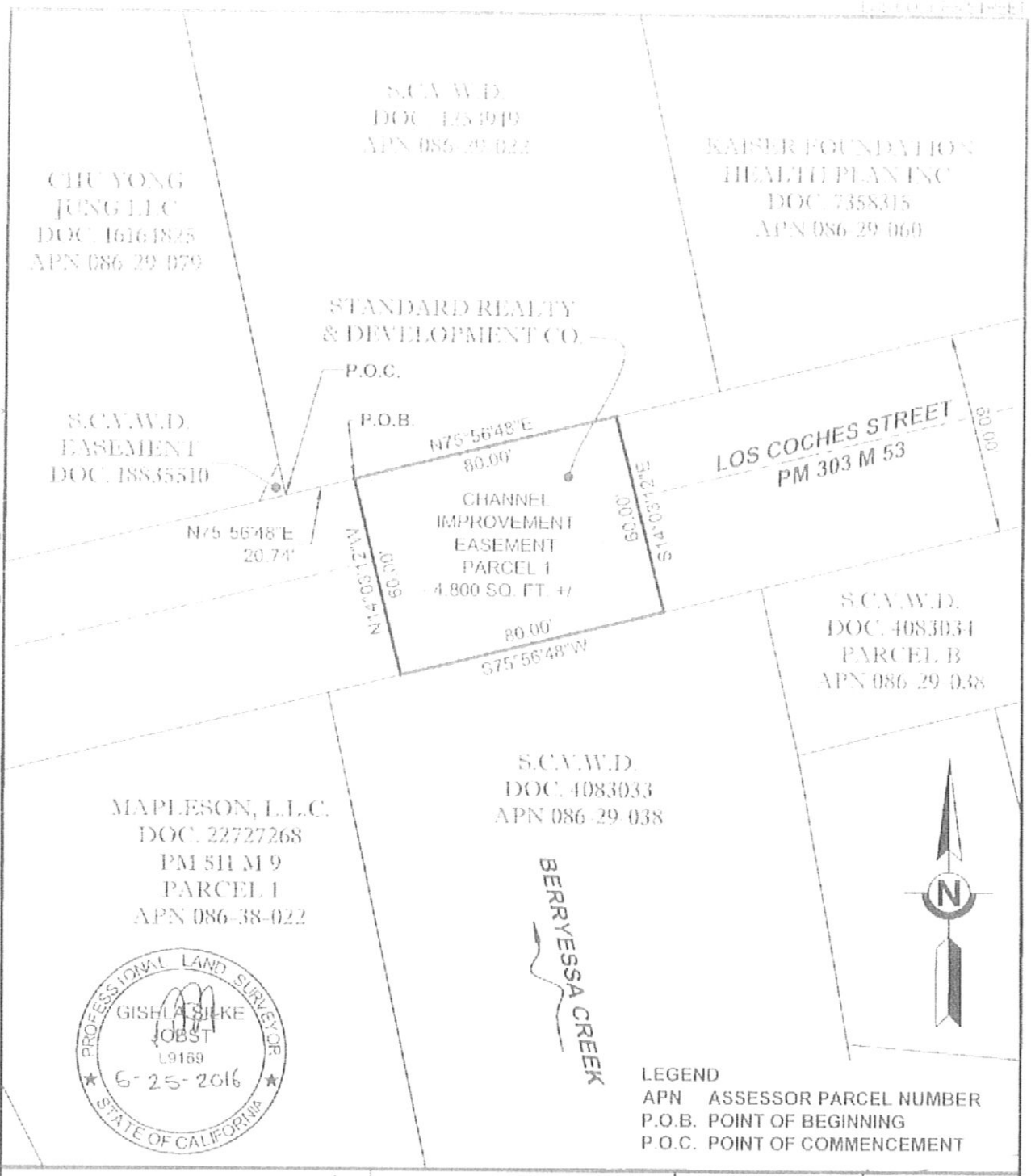

LEGEND
APN ASSESSOR PARCEL NUMBER
P.O.B. POINT OF BEGINNING
P.O.C. POINT OF COMMENCEMENT

Santa Clara Valley Water District

SCALE 1" =40'

REV.	APPR.	DATE	DESCRIPTION
1	SJP	5/4/16	MERGED 4017-80,82,88 AND 89 INTO SINGLE DOC
2			

PROJ. NO	4017
FILE NO.	80
APN	N/A
TITLE REPORT NO.	0616012498 RR
DRAWN	RPC
DATE	2/8/2016

SCVWD W:\ROW\00PROJECTS\BERRYESSA CREEK\2016_009\AUTOCAD\CURRENT\2016_009PLA_40'XX_BERRYESSA.dwg

Sheet 1 of 4

CONFORMED

EXHIBIT A-5

TO CHANNEL IMPROVEMENT CONSTRUCTION & MAINTENANCE AGREEMENT

Legal description and depiction of Railroad Easement Area
(Yosemite Drive)

(see attached)

CONFORMED

EXHIBIT A-5

PARCEL 2 - CHANNEL IMPROVEMENT EASEMENT:

ALL THAT CERTAIN REAL PROPERTY SITUATE IN THE CITY OF MILPITAS, COUNTY OF SANTA CLARA, STATE OF CALIFORNIA, BEING A PORTION OF YOSEMITE DRIVE AS SHOWN ON THAT CERTAIN PARCEL MAP FILED ON JANUARY 27, 1972 IN BOOK 296 OF MAPS AT PAGE 3, IN THE OFFICE OF THE RECORDER, COUNTY OF SANTA CLARA, MORE PARTICULARLY DESCRIBED AS FOLLOWS:

COMMENCING AT A POINT ON THE NORTH LINE OF YOSEMITE DRIVE (80 FEET WIDE), AS SHOWN ON SAID PARCEL MAP, SAID POINT ALSO BEING THE SOUTHWEST CORNER OF THAT CERTAIN LAND GRANTED TO THE SANTA CLARA COUNTY FLOOD CONTROL AND WATER CONSERVATION DISTRICT (NOW KNOWN AS THE SANTA CLARA VALLEY WATER DISTRICT), PER THAT CERTAIN GRANT DEED RECORDED ON AUGUST 30, 1971 AS DOCUMENT NUMBER 4083033 OF OFFICIAL RECORDS, IN THE OFFICE OF THE RECORDER, COUNTY OF SANTA CLARA;

THENCE ALONG SAID NORTH LINE OF YOSEMITE DRIVE (80 FEET WIDE), AS SHOWN ON SAID PARCEL MAP, ALSO BEING THE SOUTH LINE OF SAID LANDS, NORTH 75°28'48" EAST, 17.45 FEET TO THE **POINT OF BEGINNING**;

THENCE CONTINUING ALONG SAID NORTH LINE OF YOSEMITE DRIVE (80 FEET WIDE), AS SHOWN ON SAID PARCEL MAP, NORTH 75°28'48" EAST, 49.25 FEET TO THE BEGINNING OF A CURVE CONCAVE TO THE NORTH HAVING A RADIUS OF 1,572.65 FEET;

THENCE ALONG SAID CURVE THROUGH A CENTRAL ANGLE OF 1°05'49", AN ARC LENGTH OF 30.11 FEET;

THENCE LEAVING SAID NORTH LINE, SOUTH 12°30'12" EAST, 80.09 FEET TO A POINT ON THE SOUTH LINE OF YOSEMITE DRIVE (80 FEET WIDE), AS SHOWN ON SAID PARCEL MAP, SAID SOUTH LINE ALSO BEING THE NORTH LINE OF LANDS OF STANDARD REALTY AND DEVELOPMENT COMPANY PER THAT CERTAIN GRANT DEED RECORDED ON DECEMBER 28, 1970 AS DOCUMENT NUMBER 3829080 OF OFFICIAL RECORDS, IN THE OFFICE OF THE RECORDER, COUNTY OF SANTA CLARA, SAID POINT ALSO BEING THE BEGINNING OF A NON-TANGENT CURVE CONCAVE TO THE NORTH HAVING A RADIUS OF 1,652.62 FEET AND TO WHICH POINT A RADIAL LINE BEARS SOUTH 15°31'41" EAST;

THENCE WESTERLY ALONG SAID CURVE AND SAID SOUTH LINE THROUGH A CENTRAL ANGLE OF 1°00'58", AN ARC LENGTH OF 29.31 FEET;

THENCE CONTINUING ALONG SAID SOUTH LINE OF YOSEMITE DRIVE (80 FEET WIDE), AS SHOWN ON SAID PARCEL MAP, SOUTH 75°29'17" WEST, 48.57 FEET;

THENCE LEAVING SAID SOUTH LINE, NORTH 13°33'34" WEST, 80.02 FEET TO THE **POINT OF BEGINNING**.

CONTAINING 6,290 SQUARE FEET OF LAND, MORE OR LESS.

CONFORMED

EXHIBIT A-5

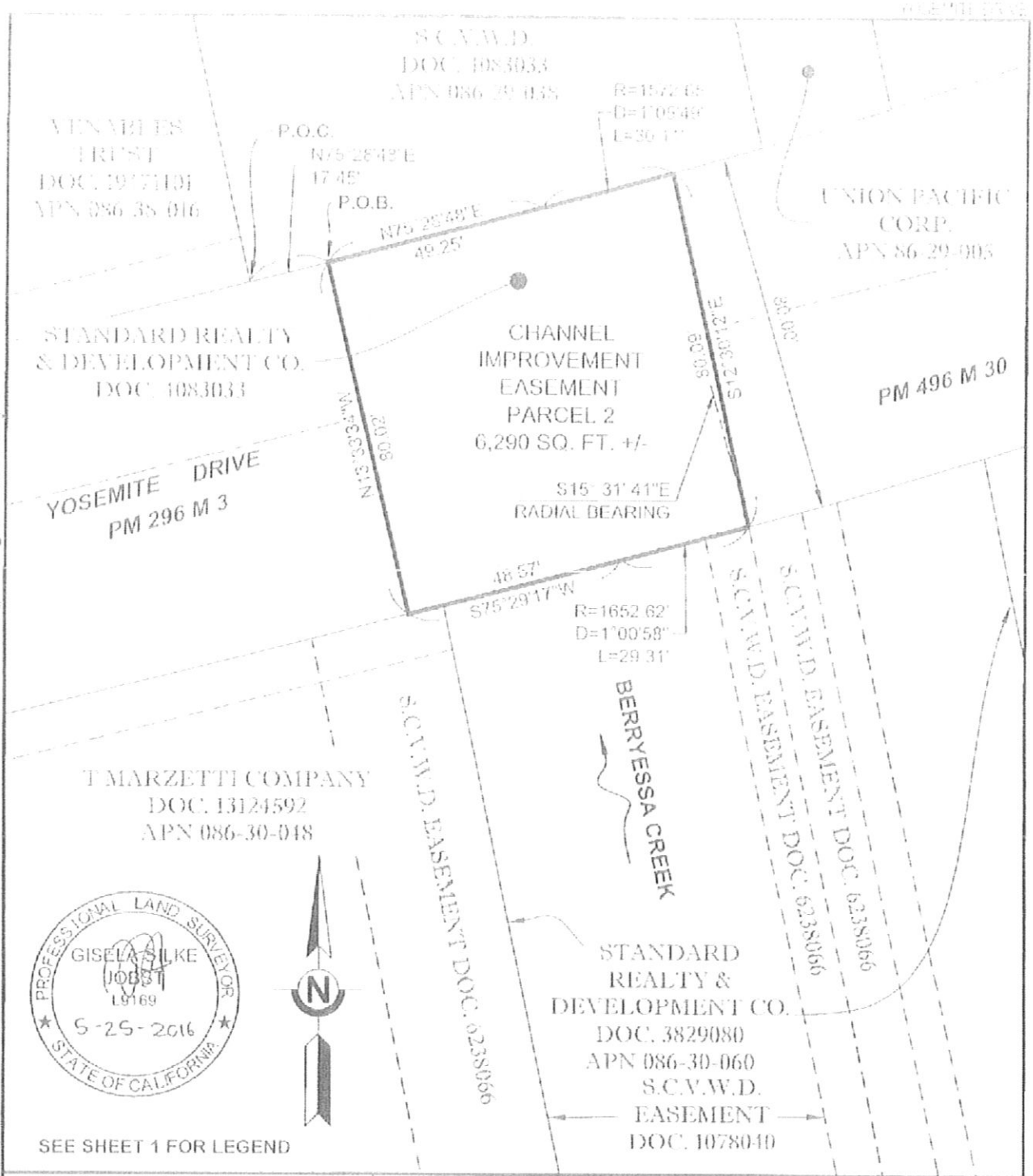

Santa Clara Valley Water District	SCALE: 1" =30'	PROJ. NO.	4017
		FILE NO.	82
		APN	N/A
		TITLE REPORT NO.	0616012496-RR
		DRAWN	RPC
		DATE	2/8/2016

REV	APPR	DATE	DESCRIPTION
1	SJP	5/4/16	MERGED 4017-80,82,88 AND 89 INTO SINGLE DOC
2			

S:\CVWD W:\ROWD\PROJECTS\BERRYESSA CREEK\2016_009\AUTOCAD\CURRENT\2016_009P_AT_4017XX_BERRYESSA.dwg

CONFORMED

EXHIBIT A-6

TO CHANNEL IMPROVEMENT CONSTRUCTION & MAINTENANCE AGREEMENT

Legal description and depiction of Railroad Easement Area
(APN No. 086-30-028)

(see attached)

CONFORMED

EXHIBIT A-6

SANTA CLARA VALLEY WATER DISTRICT
5750 Almaden Expressway
San Jose, CA 95118

Original By: CEM
Date: 11-30-2015

Revised By: NIP
Revised Date: 5-4-2016

PROJECT: BERRYESSA CREEK
PROPERTY: STANDARD REALTY AND DEV. CO.

APN: 086-30-078
RESC File No.: 401798

ALL THAT CERTAIN REAL PROPERTY SITUATE IN THE CITY OF MILPITAS, COUNTY OF SANTA CLARA, STATE OF CALIFORNIA, BEING A PORTION OF THE LANDS OF STANDARD REALTY AND DEVELOPMENT COMPANY PER THAT CERTAIN GRANT DEED RECORDED ON DECEMBER 28, 1970 AS DOCUMENT NUMBER 3829080 OF OFFICIAL RECORDS, IN THE OFFICE OF THE RECORDER, COUNTY OF SANTA CLARA, MORE PARTICULARLY DESCRIBED AS FOLLOWS:

CHANNEL IMPROVEMENT EASEMENT:

BEGINNING AT THE SOUTHWESTERLY TERMINUS OF THE LINE "SOUTH 77°11'28" WEST 4.00 FEET" OF PARCEL A AS DESCRIBED ON THAT CERTAIN GRANT EASEMENT FROM STANDARD REALTY AND DEVELOPMENT COMPANY TO THE SANTA CLARA VALLEY WATER DISTRICT, RECORDED ON NOVEMBER 13, 1978 AS DOCUMENT NUMBER 6198684 OF OFFICIAL RECORDS, IN THE OFFICE OF THE RECORDER, COUNTY OF SANTA CLARA;

THENCE ALONG SAID LINE OF SAID EASEMENT, NORTH 78°10'45" EAST, 4.00 FEET TO THE EASTERLY TERMINUS OF SAID LINE OF SAID EASEMENT;

THENCE SOUTH 12°23'53" EAST, 38.22 FEET;
THENCE SOUTH 11°20'38" EAST, 24.94 FEET;
THENCE SOUTH 11°06'40" EAST, 25.03 FEET;
THENCE SOUTH 11°10'08" EAST, 24.43 FEET;
THENCE SOUTH 14°44'08" EAST, 24.95 FEET;
THENCE SOUTH 11°42'49" EAST, 25.58 FEET;
THENCE SOUTH 11°02'27" EAST, 25.11 FEET;
THENCE SOUTH 11°02'38" EAST, 25.00 FEET;
THENCE SOUTH 11°02'52" EAST, 25.00 FEET;
THENCE SOUTH 11°02'36" EAST, 25.00 FEET;
THENCE SOUTH 11°02'29" EAST, 25.00 FEET;
THENCE SOUTH 11°02'32" EAST, 25.00 FEET;
THENCE SOUTH 11°02'24" EAST, 25.00 FEET;
THENCE SOUTH 11°03'16" EAST, 25.00 FEET;
THENCE SOUTH 11°02'56" EAST, 25.00 FEET;
THENCE SOUTH 11°00'12" EAST, 25.02 FEET;
THENCE SOUTH 11°02'44" EAST, 24.99 FEET;
THENCE SOUTH 11°03'42" EAST, 25.00 FEET;
THENCE SOUTH 11°04'21" EAST, 25.00 FEET;
THENCE SOUTH 11°06'52" EAST, 33.17 FEET TO A POINT ON THE EASTERLY LINE OF SAID PARCEL A OF SAID EASEMENT;

CONFORMED

EXHIBIT A-6

THENCE CONTINUING ALONG SAID EASTERLY LINE NORTH 11°49'15" WEST 6.136 FEET TO THE POINT OF BEGINNING.

CONTAINING 1,541 SQUARE FEET OF LAND MORE OR LESS.

BASIS OF BEARING:

BEARINGS AND DISTANCES HEREIN ARE BASED ON THE CALIFORNIA COORDINATE SYSTEM OF 1983, ZONE 3. MULTIPLY HEREIN DESCRIBED DISTANCES BY 1.00006432 TO OBTAIN GROUND DISTANCES.

SURVEYOR'S STATEMENT:

THE DESCRIPTION WAS PREPARED BY ME OR UNDER MY DIRECTION IN CONFORMANCE WITH THE REQUIREMENTS OF THE LAND SURVEYOR'S ACT.

GISELA SILKE JOBST, L9169

5-25-2016
Date

LICENSED LAND SURVEYOR
GISELA SILKE JOBST
L9169
STATE OF CALIFORNIA

CONFORMED

EXHIBIT A-6

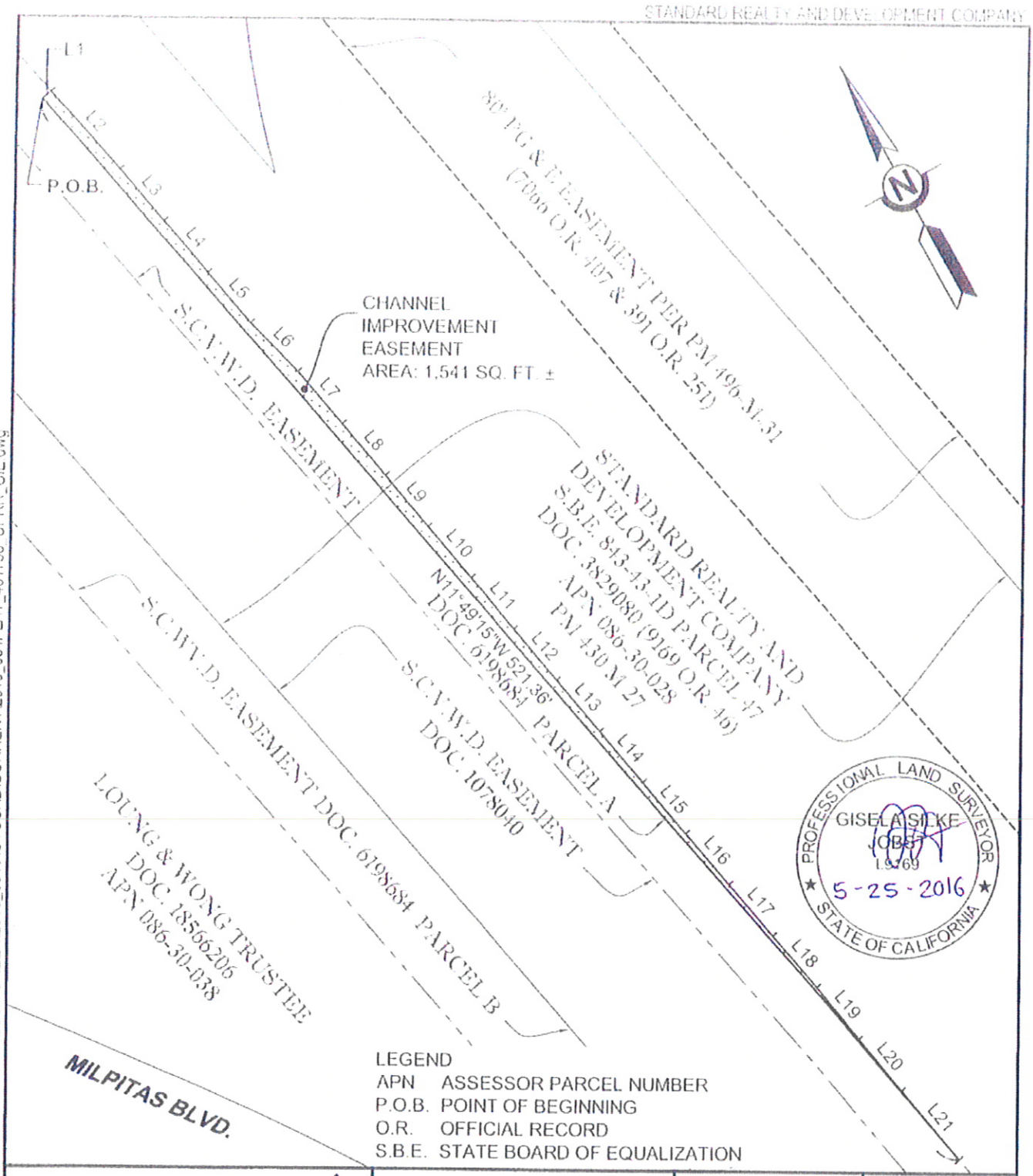

LEGEND
APN ASSESSOR PARCEL NUMBER
P.O.B. POINT OF BEGINNING
O.R. OFFICIAL RECORD
S.B.E. STATE BOARD OF EQUALIZATION

Santa Clara Valley Water District

SCALE: 1" = 50'

PROJ. NO.	4017
FILE NO.	98
APN	086-30-028
TITLE REPORT NO.	0616013055-RR
DRAWN	CLM
DATE	11/23/15

REV.	APPR.	DATE	DESCRIPTION
1	RPC	2/10/16	CHNL. IMP. EASE. WAS PERM. EASE.
2	SJP	5/4/16	MADE PARCEL 3 A STAND ALONE EASEMENT

Sheet 1 of 2

SCVWD W:\ROW\00PROJECTS\BERRYESSA CREEK\2016_054\AUTOCAD\CURRENT\2016_054PLAT_401798_UPRR_CIE.dwg

CONFORMED

EXHIBIT A-6

Line Table		
Line #	Direction	Length
L1	N78°10'45"E	4.00'
L2	S12°23'53"E	38.22'
L3	S11°20'38"E	24.94'
L4	S11°06'40"E	25.03'
L5	S11°10'08"E	24.43'
L6	S14°44'08"E	24.95'
L7	S11°42'49"E	25.58'
L8	S11°02'27"E	25.11'
L9	S11°02'38"E	25.00'
L10	S11°02'52"E	25.00'
L11	S11°02'36"E	25.00'

Line Table		
Line #	Direction	Length
L12	S11°02'29"E	25.00'
L13	S11°02'32"E	25.00'
L14	S11°02'24"E	25.00'
L15	S11°03'16"E	25.00'
L16	S11°02'56"E	25.00'
L17	S11°00'12"E	25.02'
L18	S11°02'44"E	24.99'
L19	S11°03'42"E	25.00'
L20	S11°04'21"E	25.00'
L21	S11°06'52"E	33.17'

PROFESSIONAL LAND SURVEYOR
GISELA SILKE JOBST
L9169
5-25-2016
STATE OF CALIFORNIA

Santa Clara Valley Water District

SCALE: NOT TO SCALE

PROJ. NO.	4017
FILE NO.	98
APN	086-30-028
TITLE REPORT NO.	0616013055-RR
DRAWN	CLM
DATE	11/24/15

REV.	APPR.	DATE	DESCRIPTION
1	SJP	5/4/16	MADE PARCEL 3 A STAND ALONE EASEMENT
2			

Sheet 2 of 2

SCVWD W:\ROW\00PROJECTS\BERRYESSA CREEK\2016_054\AUTOCAD\CURRENT\2016_054PLAT_401798_UPRR_CIE.dwg

CONFORMED

EXHIBIT A-7

TO CHANNEL IMPROVEMENT CONSTRUCTION & MAINTENANCE AGREEMENT

Legal description and depiction of Railroad Easement Area
(Montague Expressway)

(see attached)

CONFORMED

EXHIBIT A-7

PARCEL 3 - CHANNEL IMPROVEMENT EASEMENT:

ALL THAT CERTAIN REAL PROPERTY SITUATE IN THE CITY OF MILPITAS, COUNTY OF SANTA CLARA, STATE OF CALIFORNIA, BEING A PORTION OF MONTAGUE EXPRESSWAY (FORMERLY KNOWN AS LANDESS AVENUE) AS SHOWN ON THAT CERTAIN RECORD OF SURVEY FILED ON SEPTEMBER 7, 1972 IN BOOK 308 OF MAPS AT PAGE 18, IN THE OFFICE OF THE RECORDER, COUNTY OF SANTA CLARA, MORE PARTICULARLY DESCRIBED AS FOLLOWS:

BEGINNING AT A POINT ON THE WEST LINE OF THAT CERTAIN EASEMENT RETAINED BY THE SANTA CLARA VALLEY WATER DISTRICT PER THAT CERTAIN QUITCLAIM DEED RECORDED ON APRIL 5, 2000 AS DOCUMENT NUMBER 15204021 OF OFFICIAL RECORDS, IN THE OFFICE OF THE RECORDER, COUNTY OF SANTA CLARA, SAID POINT ALSO BEING ON THE SOUTH LINE OF MONTAGUE EXPRESSWAY;

THENCE ALONG SAID EASEMENT THE FOLLOWING FOUR COURSES:

NORTH 11°48'26" WEST, 47.50 FEET;
NORTH 69°46'00" EAST, 67.75 FEET;
SOUTH 20°14'00" EAST, 35.00 FEET;
NORTH 69°46'00" EAST, 7.76 FEET;

THENCE LEAVING SAID EASEMENT, NORTH 11°47'56" WEST, 74.97 FEET;

THENCE SOUTH 69°48'25" WEST, 20.20 FEET TO THE SOUTHEAST CORNER OF THAT CERTAIN 60.00 FOOT WIDE EASEMENT GRANTED TO THE SANTA CLARA COUNTY FLOOD CONTROL AND WATER CONSERVATION DISTRICT (NOW KNOWN AS THE SANTA CLARA VALLEY WATER DISTRICT) PER THAT CERTAIN GRANT DEED RECORDED ON APRIL 19, 1955 AS DOCUMENT NUMBER 1078042 OF OFFICIAL RECORDS, IN THE OFFICE OF THE RECORDER, COUNTY OF SANTA CLARA;

THENCE ALONG THE SOUTHERLY LINE OF SAID EASEMENT, SOUTH 69°48'25" WEST, 60.66 FEET;

THENCE ALONG THE PROLONGATION OF SAID SOUTHERLY LINE, SOUTH 69°48'25" WEST, 10.10 FEET TO A POINT ON THE EASTERLY RIGHT-OF-WAY LINE OF MILPITAS BOULEVARD;

THENCE ALONG SAID EASTERLY RIGHT-OF-WAY LINE OF MILPITAS BOULEVARD, SOUTH 11°50'30" EAST, 87.15 FEET TO A POINT ON THE SOUTH LINE OF MONTAGUE EXPRESSWAY;

THENCE ALONG SAID SOUTH LINE NORTH 69°46'00" EAST, 10.21 FEET TO THE **POINT OF BEGINNING**.

CONTAINING 4,407 SQUARE FEET OF LAND, MORE OR LESS.

CONFORMED

EXHIBIT A-7

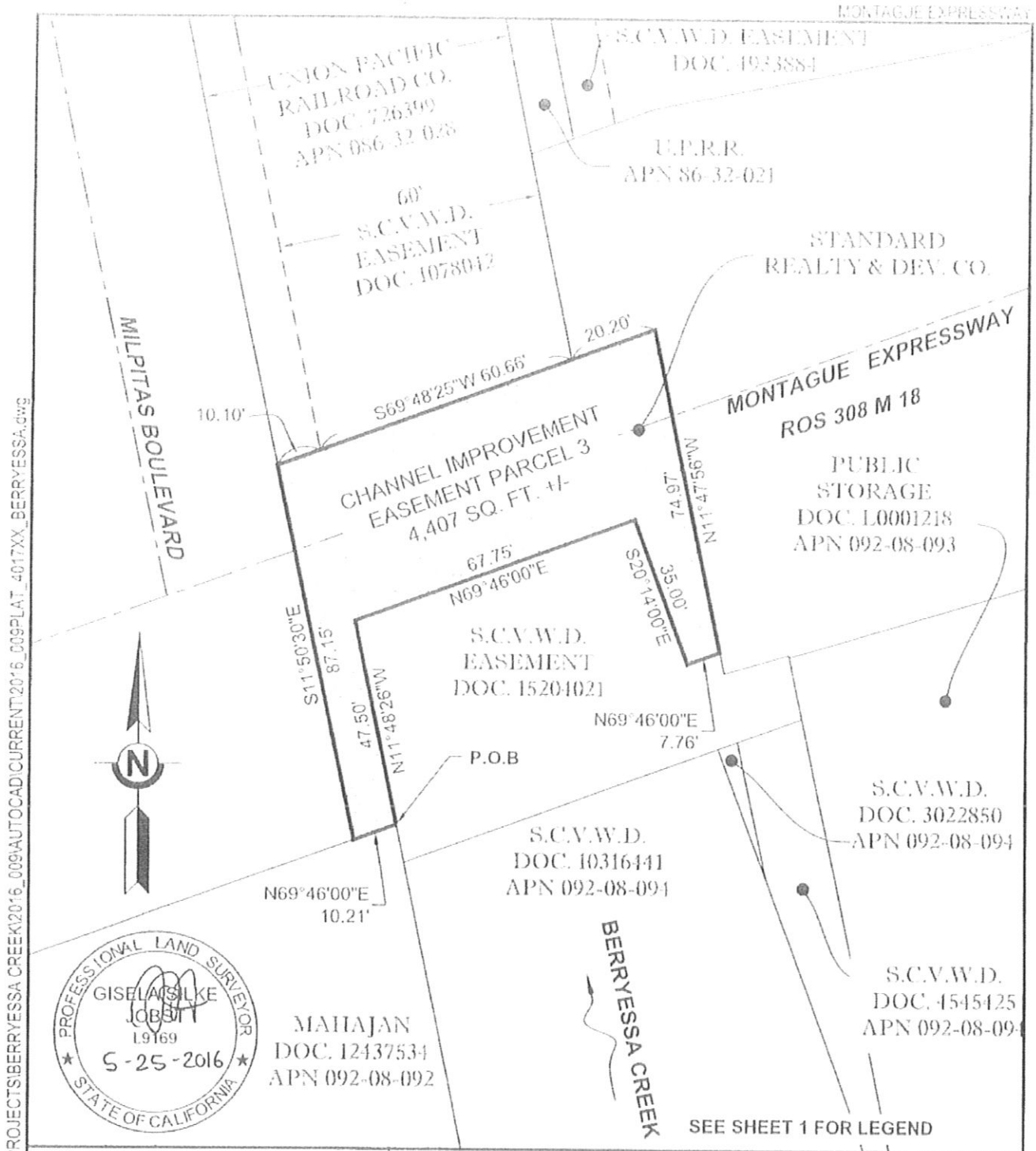

SCVWD W:\ROW\00PROJECTS\BERRYESSA CREEK\2016_009\AUTOCAD\CURRENT\2016_009PLAT_4017XX_BERRYESSA.dwg

Santa Clara Valley Water District	SCALE: 1" = 30'	PROJ. NO.	4017
		FILE NO.	88
		APN	N/A
REV. / APPR. / DATE	DESCRIPTION	TITLE REPORT NO.	616012501-RR
1 / SJP / 5/4/16	MERGED 4017-80,82,88 AND 89 INTO SINGLE DOC.	DRAWN	RPC
2		DATE	2/8/2016

CONFORMED

EXHIBIT A-8

TO CHANNEL IMPROVEMENT CONSTRUCTION & MAINTENANCE AGREEMENT

General Depiction of Temporary License Area

(see attached)

CONFORMED

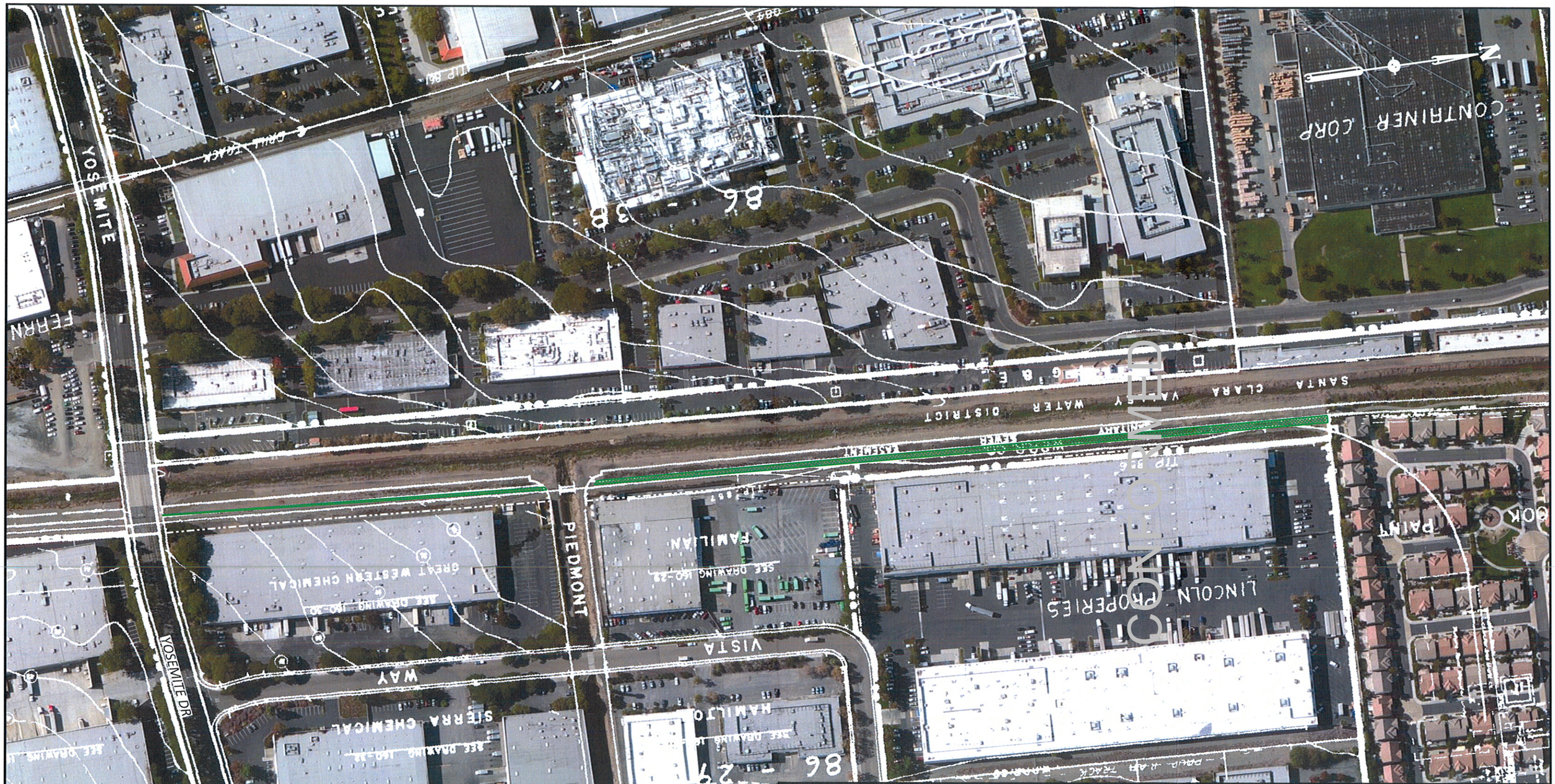

LEGEND:

TEMPORARY LICENSE AREA

UPRRCO. R/W OUTLINED

CADD FILENAME	0296719.DGN
SCAN FILENAME	0296719-CA45840.TIF

NOTE: BEFORE YOU BEGIN ANY WORK, SEE AGREEMENT FOR FIBER OPTIC PROVISIONS.

EXHIBIT "A-8"

UNION PACIFIC RAILROAD COMPANY

MILPITAS, SANTA CLARA COUNTY, CA

M.P. 11.40 TO 10.93 - MILPITAS INDUSTRIAL LEAD

TO ACCOMPANY AGREEMENT WITH
SANTA CLARA VALLEY WATER DISTRICT
WP V-12 / 4
SCALE: 1" = 200'

OFFICE OF REAL ESTATE
OMAHA, NEBRASKA DATE: 5-23-2016

COB FILE: 2967-19

EXHIBIT B

TO CHANNEL IMPROVEMENT CONSTRUCTION & MAINTENANCE AGREEMENT

Section 1. LIMITATION AND SUBORDINATION OF RIGHTS GRANTED.

a) The District's rights under this Agreement are subject and subordinate to the prior and continuing right and obligation of each of Standard and Railroad to use and maintain its entire property (including the Easement Property) to construct, add, maintain, repair, renew, use, operate, change, modify or relocate railroad tracks, signal, communication, fiber optics and other wirelines, pipelines and other facilities upon, under, over, along or across any or all parts of its property, all or any of which may be freely done by Standard and/or Railroad, as applicable; provided, however, that any use of the Easement Property by Standard and/or Railroad, as applicable, shall not interfere with or abridge the rights and easements acquired by the District hereunder.

b) This Agreement is also subject to all outstanding superior rights (including without limitation those in favor of easement holders, licensees and lessees of Standard's and/or Railroad's property, and others) and the right of Standard and/or Railroad, as applicable, to renew and extend the same, and is made without covenant of title or for quiet enjoyment. It shall be District's sole obligation to obtain such additional permission, licenses and grants necessary on account of any such existing rights. Notwithstanding the foregoing, each of Standard and Railroad understand and agree that it shall not grant a future right in the Easement Property, as applicable, that expressly interferes with or abridges the rights and easements acquired by the District hereunder.

c) The District and Railroad hereby acknowledge and agree that nothing contained in this Agreement shall be deemed to waive or diminish any legal preemption or preclusion that may apply to Railroad because of its status as a common carrier regulated by the federal government (including without limitation those provisions contained in 49 U.S.C. § 10501), and nothing contained in this Agreement shall be interpreted to suggest that Railroad has submitted, or will submit, to the jurisdiction or application of any local, state or federal levee or flood protection entity or laws.

Section 2. PLANS.

a) The District has submitted (or, as applicable, has caused USACE and/or Contractors to submit) plans showing design, specifications, and methods of procedure to Railroad for the portion of the Project located within the Easement Property and/or affecting Railroad's facilities or operations within the Project Area for Railroad's approval, in Railroad's sole discretion, at the design completion level of sixty percent (60%).

b) Prior to commencing the Project and any Project Work within the Project Area, the District shall submit (or, as applicable, shall cause USACE and/or Contractors to submit) to Railroad for Railroad's review and approval, in Railroad's sole discretion, the plans showing

CONFORMED

design, specifications, and methods of procedure for the portion of the Project located within the Easement Property and/or affecting Railroad's facilities or operations within the Project Area, at a minimum, at the ninety percent (90%) and the one hundred percent (100%) design completion levels. The District shall not commence the Project or any Project Work within the Project Area before the Plans have been approved in writing by Railroad's Vice President Engineering Services or his designated representative. Routine maintenance activities for sediment removal, graffiti removal and vegetation management are not subject to this Section 2, provided that such activities do not cause any deviations from the Plans and do not otherwise impact the operations, functionality or safety of Railroad.

b) "**Plans**" means the final one hundred percent (100%) completed plans, specifications, methods of procedures, and conditions of approval (including, without limitation, the plans, specifications, methods of procedure, and approval conditions for drainage, shoring, sheeting and excavations affecting the Easement Property, Temporary License Area, Railroad's right of way, other property, and railroad facilities) for the portion of the Project located within the Project Area that are approved in writing, by Railroad's Vice President Engineering-Design or his authorized representative. The Plans are hereby made a part of this Agreement by reference.

c) The Project, and all Project Work, shall be performed by the District (or another party on behalf of the District as permitted herein) to the satisfaction of Railroad, and in full conformance with the Plans. No changes in the Plans approved by Railroad may be made unless Railroad consents in writing to such changes.

d) Railroad shall have the right, if it so elects, as a condition of plan approval, to itself provide or require the District to provide, generally applied Railroad standards for protection and support that the Railroad deems appropriate for assuring the safety and continuity of its track and railroad operations and facilities during or after completion of Project and any Project Work. In the event Railroad itself provides such protection or support, the expenses incurred by Railroad in connection therewith shall be deemed Reimbursable Costs in accordance with Article 2 of this Agreement. Conditions of approval may also include without limitation, District's compliance with standards and specifications developed, endorsed or adopted by Railroad and/or AREMA as well as all applicable laws, rules and regulations. Railroad agrees to provide as much supporting documentation as is customarily provided by Railroad for projects of this type.

e) Intentionally Deleted.

f) Notwithstanding Railroad's review and approval of any plans (including the Plans), Railroad is not responsible for the design, functionality, or permitting of the Project improvements, the Project or any Project Work. Railroad's plan review and approval is limited to Railroad's perceived impact of the Project improvements, the Project and any Project Work on track and railroad operations and facilities. Railroad makes no representations or warranty whatsoever regarding the Plans, including without limitation any representations or warranty as to their validity, accuracy, legal compliance or completeness. Any reliance by District or others

CONFORMED

(including without limitation, USACE and any Contractor) on the Plans is at the risk of the District and such others.

Section 3. PERMITS.

Railroad shall have no obligation to obtain (or to be responsible for any costs or expenses associated with) any federal, state and local permits that may be required for the Project and any Project Work. Railroad will coordinate any permits required for the performance of the at-grade roadway crossing work, at the District's cost and expense.

Section 4. CONSTRUCTION, MAINTENANCE AND OPERATION.

a) The District, at its sole expense, shall keep and operate the Project improvements on the Easement Property in a good and safe condition. The District shall keep the Easement Property free and clear of vegetation, debris, sediment or obstructive matter which may or could interfere with or impede the proper functioning of drainage or Railroad's trains, property, facilities and operations.

b) The District shall not cross Railroad's track with any equipment except at existing, open public crossings, unless Railroad and the District have made a separate written crossing agreement in accordance with Article 9 above. When not in use, the District's equipment and materials shall be kept at least twenty five (25) feet from the centerline of the nearest railroad track. Equipment includes without limitation vehicles, tools, and machinery.

c) Except in those areas where no facilities were permitted on Plans because of clearance to the Railroad's trackage, the District shall provide, maintain, and keep in place at all times adequate barrier protection or gates on the portion of the Project improvements located on the Easement Property to prevent persons, vehicles and equipment entering on the Project Area or crossing Railroad's tracks via the Project Area.

d) During the performance of the Project or any Project Work, the District shall not excavate on any embankment or near the toe of any embankment which supports or stabilizes a track or other railroad facility without prior written plan approval of Railroad. In the event of any instability or settlement of such embankment, track or railroad facility related to any excavation for the Project or any Project Work, the District, at its sole expense, shall restore Railroad's embankment to its proper grade, slope, composition and dimensions. Railroad may elect to restore such embankment, tracks and railroad facilities using Railroad's work force and material at the District's sole expense.

e) The District shall protect at all times Railroad's personnel, trains, property, facilities and operations, including without limitation the track and all of its support components, from damage related to or arising from the Project improvements, the Project or Project Work. Railroad has the right to require and furnish during any Project Work, at the District's sole expense, all flagging and/or other protection which, in Railroad's sole judgment, are appropriate or desirable for promoting the continuity of railroad operations and/or the safety of Railroad's personnel, trains, property, facilities, and operations.

CONFORMED

Section 5. **NOTICE OF COMMENCEMENT OF WORK, FLAGGING.**

a) The District agrees to coordinate (and shall cause USACE and/or any Contractors to coordinate) all Project Work with the following Railroad representative or his or her duly authorized representative (the "**Railroad Representative**"):

Union Pacific Railroad Company
Manager of Track Maintenance
37950 Central Court, Suite B
Newark, California 94560

Subject to the advance notice requirements included in Section 14 below, the District agrees to notify the Railroad Representative at least fifteen (15) days in advance of the District commencing any Project Work, and at least thirty (30) days in advance of the proposed performance of any activity or work in which any person or equipment will be within twenty-five (25) feet of any track, or will be near enough to any track that any equipment extension (including without limitation a crane boom) can reach to within twenty-five (25) feet of any track, and in no event will the District access, and the District shall be responsible for ensuring that neither USACE nor any Contractor accesses, any Standard property and/or Railroad property within twenty-five (25) feet of any track until Railroad advises the District it is safe to do so. In an emergency situation requiring immediate attention, the District shall provide as much notice as practicable to the Railroad Representative before commencing any work or activity permitted by this Agreement. Equipment includes without limitation vehicles, tools, and machinery. **Subject to the foregoing, in an emergency situation requiring immediate attention, the District will also call Railroad via the Response Management Communications Center at 1-888-877-7267.** Notwithstanding the foregoing notice requirements in this Section 5, the District shall not be required to provide such notice for any day to day use by the District for ingress and egress of those roadways located on the Easement Property that are separated from Railroad's trackage by a fence or that portion of the roadway adjacent thereto where the parties have permitted no fence to be installed due to clearance issues; provided, however, that the District shall be required to provide notice if any equipment extension (including without limitation a crane boom) can reach beyond the edge of the Easement Property closest to the Railroad's trackage. For the avoidance of doubt, day to day use of the roadway for ingress or egress shall not include any work being performed on or about the roadway.

b) Upon receipt of the notice required by Section 5(a) above, the Railroad Representative will determine and inform the District whether a flagman need be present and whether the District need implement any special protective or safety measures. If any flagmen or other special protective or safety measures are performed by the Railroad, such services will be provided at the District's expense with the understanding that if Railroad provides any flagging or other services, the District shall not be relieved of any of its responsibilities or liabilities set forth herein.

CONFORMED

c) The District shall prohibit all work and activity within twenty-five (25) feet of a track's centerline during the times that the flagging or other special protective or safety measures required by the Railroad Representative are not present or active at the activity or work site.

d) The District acknowledges that:

i) a flagman is paid one and one-half times the current hourly rate for overtime, Saturdays and Sundays; and two and one-half times current hourly rate for holidays.

ii) a flagman's wage rates are subject to change, at any time, by law or by agreement between the Railroad and its employees, and may be retroactive as a result of negotiations or a ruling of an authorized government agency. Additional charges on labor are also subject to change. If the wage rate or additional charges are changed, the District shall pay on the basis of the new rates and charges.

iii) reimbursement to the Railroad will be required covering the full eight hour day during which a flagman is furnished, unless he or she can be assigned to other Railroad work during a portion of such day, in which event reimbursement will not be required for the portion of the day during which the flagman is engaged in other work. Reimbursement will also be required for any day not actually worked by said flagman following his assignment to work on the project for which the Railroad is required to pay the flagman and which could not reasonably be avoided by the Railroad by assignment of such flagman to other work, even though the District may not be working during such time.

e) All expenses connected with the furnishing of a flagman or other special protective or safety measures shall be at the sole cost and expense of the Contractor and the District. The District may elect to have Railroad initially send bills for such expenses to the Contractor. For projects having duration beyond 30 days, Railroad may bill such expenses on an installment basis as work progresses. Railroad and shall have one hundred eighty (180) days to calculate and send final billing for such expenses to the District or Contractor after Railroad has been notified in writing by the District that the project work has been completed. The District or Contractor shall pay the progressive and final billing within thirty (30) days after its receipt of billing. The District shall pay Railroad for all bills which are initially to be billed to the District or which Contractor has not paid, within thirty (30) days after District's receipt of billing.

Section 6. <u>INTENTIONALLY DELETED.</u>

Section 7. <u>NO INTERFERENCE WITH RAILROAD'S OPERATION AND SAFETY.</u>

The Project improvements on the Easement Property shall be kept in such condition, and all Project Work and subsequent use of and work performed within the Easement Property shall be performed in such manner, as to prevent any and all interference whatsoever with the constant, continuous and uninterrupted use of the tracks, property and facilities of the Railroad

CONFORMED

and/or Standard, and nothing shall be done or suffered to be done by the District or USACE at any time that would in any manner impair the safety thereof.

Section 8. PROTECTION OF FIBER OPTIC CABLE SYSTEMS.

a) Fiber optic cable systems may be buried on Standard's property and/or Railroad's property. Protection of the fiber optic cable systems is of extreme importance since any break could disrupt service to users resulting in business interruption and loss of revenue and profits. The District shall telephone the Railroad at 1-800-336-9193 (a 24-hour number) to determine if fiber optic cable is buried anywhere on the portion of Standard's property and/or Railroad's property to be used by the District. If it is, the District will telephone the telecommunications company(ies) involved, arrange for a cable locator, make arrangements for relocation or other protection of the fiber optic cable, and will commence no work on Standard's property and/or Railroad's property until all such protection or relocation has been accomplished.

b) In addition to other indemnity provisions in this Agreement, the District shall indemnify and hold Standard and Railroad harmless from and against all costs, liability and expense whatsoever (including, without limitation, attorneys' fees, court costs and expenses) arising out of any act or omission of the District, its Contractor, agents and/or employees, USACE or any of its Contractors, that causes or contributes to (1) any damage to or destruction of any telecommunications system on Standard's property and/or Railroad's property, and (2) any injury to or death of any person employed by or on behalf of any telecommunications company, and/or its contractor, agents and/or employees, on Standard's property and/or Railroad's property. The District shall not have or seek recourse against Standard or Railroad for any claim or cause of action for alleged loss of profits or revenue or loss of service or other consequential damage to a telecommunication company using Standard's property and/or Railroad's property or a customer or user of services of the fiber optic cable on Standard's property and/or Railroad's property.

Section 9. CLAIMS AND LIENS FOR LABOR AND MATERIAL; TAXES.

a) The District shall fully pay for all materials, work and labor placed or performed on Standard's property and/or Railroad's property in connection with the Project or Project Work, and shall not permit or suffer any mechanic's or material man's lien of any kind or nature to be enforced against Standard's property and/or Railroad's property for any labor performed, work done or materials furnished thereon at the instance or request or on behalf of the District. The District shall indemnify and hold harmless Standard and Railroad against and from any and all liens, claims, demands, costs and expenses of whatsoever nature in any way connected with or growing out of such work done, labor performed, or materials furnished.

b) The District shall promptly pay or discharge all taxes, charges and assessments levied upon, in respect to, or on account of the Project improvements, to prevent the same from becoming a charge or lien upon Standard property and/or Railroad property, and so that the taxes, charges and assessments levied upon or in respect to Standard's property and/or Railroad's property shall not be increased because of the location, construction or maintenance of any Project improvements placed upon Standard's property and/or Railroad's property, or on account

CONFORMED

of any District interest therein. Where such tax, charge or assessment may not be separately made or assessed to the District, but shall be included in the assessment of Standard's property and/or Railroad's property, then the District shall pay to Standard or Railroad, as applicable, an equitable proportion of such taxes, charges and assessments determined by the value of the District's property upon property of Standard and/or Railroad as compared with the entire value of such property.

Section 10. RESTORATION OF RAILROAD'S FENCES AND FACILITIES.

In the event Standard and/or Railroad authorizes the District to take down any fence of Standard and/or Railroad or in any manner move or disturb any other facility of Standard and/or Railroad in connection with the Project or the Project Work, then in that event the District shall, as soon as possible and at the District's sole expense, restore such fence and other facility to the same condition as the same were in before such fence was taken down or such other facility was moved or disturbed, and in addition to any other indemnification provision of this Agreement, the District shall indemnify and hold harmless Standard and/or Railroad (as applicable) and their officers, agents and employees, against and from any and all liability, loss, damages, claims, demands, costs and expenses of whatsoever nature, including court costs and attorneys' fees, which may result from injury to or death of persons whomsoever, or damage to or loss or destruction of property whatsoever, when such injury, death, damage, loss or destruction grows out of or arises from the taking down of any fence or the moving or disturbance of any other facility of Standard and/or Railroad, as applicable.

Section 11. INDEMNITY.

a) As used in this Section, "Railroad" includes Standard and other railroad companies using Standard's property and/or Railroad's property at or near the location of the Project improvements and their officers, agents, and employees; "**Loss**" includes loss, damage, claims, demands, actions, causes of action, penalties, costs, and expenses of whatsoever nature, including court costs and attorneys' fees, which may result from: (i) injury to or death of persons whomsoever (including without limitation the Railroad's, the District's, USACE's and any Contractor's officers, agents, and employees, as well as any other person); and (ii) damage to or loss or destruction of property whatsoever (including without limitation the District's property, any Contractor's property, adjacent property and crops, Railroad's roadbed, tracks, equipment, and other property, and property in Railroad's care or custody).

b) To the extent it may lawfully do so, the District agrees to assume the risk of loss or damage to the Project improvements and to defend, indemnify and hold harmless the Railroad from any Loss which is due to or arises from (i) the construction, operation, maintenance, repair, reconstruction, renewal, removal, modification, use or existence of the Project improvements and appurtenances thereto, or any part thereof, including without limitation any flow of water or flooding from, through or around the Project improvements, or (ii) failure of the District, USACE or any Contractor to comply with or perform any of the terms and conditions set forth in this Agreement; provided, however, that the foregoing indemnification provisions shall not apply to any claims, damages, costs and expenses that have been fully compensated for through the insurance coverage required of the District or Contractor by this Agreement. The foregoing

CONFORMED

indemnification provisions shall apply in all situations, including without limitation, situations where the Loss is caused in whole or part by Railroad's negligence, except to the extent that the Loss is caused by the sole and direct gross negligence or intentional misconduct of Railroad.

c) Any liability of any party hereunder to one of its employees under any Workers' Compensation Act or the Federal Employers' Liability Act shall not be questioned or in any way challenged by the other party, nor shall any jury or court findings, resulting from any employee's suit against either party pursuant to any such Act(s), be relied upon or used by either party in any attempt to assert common law liability against the other.

Section 12. COMPLIANCE WITH LAWS.

The District shall comply with, and shall cause USACE to comply with, all applicable federal, state and local laws, regulations and enactments affecting the Project and the Project Work. The District shall use only such methods as are consistent with the safety of the District, Contractor, Standard and Railroad, and their officers, agents, employees, Standard's property, Railroad's property, and the public in general. The District (without limiting the generality of the foregoing) shall comply, and shall cause USACE to comply, with all applicable state and federal occupational safety and health acts and regulations. All Federal Railroad Administration regulations shall be followed when activity or work is performed on Standard's property and/or Railroad's property. If any failure by the District to comply with, or cause compliance with, any such laws, regulations, and enactments, shall result in any fine, penalty, cost or charge being assessed, imposed or charged against Standard and/or Railroad, the District shall reimburse and indemnify Standard and/or Railroad for any such fine, penalty, cost or charge, including without limitation attorneys' fees, court costs and expenses. The District further agrees in the event of any such action, upon notice thereof being provided by Standard and/or Railroad, as applicable, to defend such action free of cost, charge, or expense to Standard and/or Railroad, respectively.

Section 13. SUPERVISION BY DISTRICT.

The District, at its sole expense, shall fully and closely supervise Project and all Project Work on Railroad's property. The District's responsibility for safe conduct and adequate policing and supervision is not lessened or otherwise affected by Railroad's approval of any plans (including the Plans), or by Railroad's performance of the Railroad Work or collaboration in performance of any Project Work, or by the presence of Railroad's personnel at or near the Project Area, or by the District's or a Contractor's compliance with any requests or recommendations made by Railroad's personnel.

Section 14. SCHEDULE OF PROJECT WORK AND WORK WINDOWS.

a) Following thirty (30) days prior written notice from the District to the Railroad thereof, the District, USACE (as applicable) and Railroad shall meet with Contractor after a contract is awarded for the Project and/or Project Work for the purpose of negotiating and establishing a schedule detailing the timing and duration of the Project Work phases and sequences, and detailing the number, timing, duration, and frequency of work windows, as applicable. A work window is a time period during which a track is taken out of service to

CONFORMED

accommodate the Project Work. No work shall be performed on Standard's property and/or Railroad's property in connection with the Project or the Project Work until a schedule has been approved by Railroad in writing. The District shall inform and shall cause USACE to inform (as applicable) Contractor that Contractor cannot perform any Project Work on Standard's property and/or Railroad's property until such schedule has been approved by Railroad in writing. If multiple tracks are present, the District agrees not to remove (and shall cause any Contractor performing any Project Work not to remove) from service all existing tracks at the work site at the same time unless agreed to by Railroad in the Approved Work Schedule (as defined below) or by the Railroad Representative. Without limiting the generality of the foregoing (and notwithstanding the reference in the Plans to a 72 hour outage), Railroad agrees to provide two limited work windows subject to the following additional limitations. Railroad will provide one (1) outage for the Trestle Structure for a period not to exceed sixty (60) hours, and one (1) outage for the Piedmont Structure for a period not to exceed ninety (90) days. With respect to the Trestle Structure work window, the District shall provide to Railroad prior written notice of its request to initiate the Trestle Structure work to allow the Railroad sufficient time to order the related track materials. Upon the earlier to occur of (i) Railroad's notice to the District that the related track materials are available for installation or (ii) one hundred twenty (120) days after Railroad receives the District's request to initiate the Trestle Structure work, the District may provide to Railroad written notice requesting the work window for the Trestle Structure. Following the Railroad's receipt of such request, the parties shall reasonably cooperate to identify the dates and times the work window will be made available to the District, which coordination shall include Railroad's removal of the existing trackage on the Trestle Structure. With respect to the Piedmont Structure work window, the District shall provide to Railroad prior written notice of its request to initiate the Piedmont Structure work to allow the Railroad sufficient time to order the related track materials. Upon the earlier to occur of (i) Railroad's notice to the District that the related track materials are available for installation or (ii) one hundred twenty (120) days after Railroad receives the District's request to initiate the Piedmont Structure work, the District may provide to Railroad written notice requesting the work window for the Piedmont Structure. Following the Railroad's receipt of such request, the parties shall reasonably cooperate to identify the dates and times the work window will be made available to the District, provided that such work window shall not be required to be provided less than forty-five (45) days after the Railroad receives the District's written request for the work window. The District acknowledges that the work windows include any time required for the Railroad to inspect the applicable structure to ensure that the same has been installed in compliance with the Plans and the other requirements contained in this Agreement. If the District fails to timely perform the Trestle Structure work as required herein, such that the applicable structure cannot be turned over to the Railroad on or before the expiration of the applicable work window with completed construction in accordance with the Plans, the District shall be required to pay damages equal to Ten Thousand and No/100 Dollars $10,000.00 per day until such issues are fully remedied to the reasonable satisfaction of the Railroad. The District further acknowledges that the determination of dates and times for the word windows are subject to a number of factors, including without limitation, availability of the Railroad's forces to perform its portion of the work, operating schedules, customer obligations and availability of materials, and may need to be rescheduled to due to the Railroad's forces being unavailable or for matters outside the reasonable control of the Railroad (including without limitation train derailments). All time

CONFORMED

periods set forth herein (excluding the work windows) shall be subject to reasonable extension for any events outside of the control of the Railroad.

b) Once a schedule setting forth the minimum number, duration and frequency of work windows is agreed to by the parties pursuant to Section 14(a) above, such schedule shall be deemed a component of the Plans. Any work windows requested by Contractor or the District beyond the minimums agreed upon by the parties shall be subject to Railroad's approval.

c) "**Approved Work Schedule**" means the agreed-to timing and duration of the various Project Work phases, sequences and work windows, approved in writing by both Contractor, the District, and/or USACE, as applicable, and Railroad and which is based on minimums agreed to by the parties pursuant to this Section 14, subject to modification, restriction, rescheduling, and canceling as permitted herein. Whenever the term Approved Work Schedule is used herein, it includes the work schedule as it has been modified, restricted, or rescheduled by Railroad after initial approval by both parties. Such Approved Work Schedule shall be deemed a component of the Plans.

d) The District agrees that it will strictly comply (and require USACE and any Contractors, as applicable, to strictly comply) with all Approved Work Schedules. The District agrees that the Project Work shall be performed only in the sequence and only within the window periods set forth in an Approved Work Schedule, unless otherwise directed or authorized by the Railroad Representative.

e) The District agrees that any Project Work may be restricted and rescheduled as Railroad deems appropriate or necessary to accommodate Railroad's operations or alleviate train or track congestion. The District agrees that Railroad shall have the right to restrict, modify or cancel an Approved Work Schedule on short written notice or oral notice in the field including, without limitation, on the day of a scheduled work window, due to railroad operations or congestion on Railroad's track at the work site or on other portions of Railroad's track system. However, Railroad will not unreasonably restrict or reschedule the Project Work, or unreasonably restrict, modify or cancel Approved Work Schedules, and Railroad will do so only as appropriate or necessary in connection with Railroad's common carrier obligations. The District hereby waives all claims against Railroad for all damages whatsoever related to Railroad restricting or rescheduling Project Work and/or canceling, restricting or modifying an Approved Work Schedule. In the event that an Approved Work Schedule is cancelled or otherwise modified so as to prevent the District from proceeding with the Project Work, Railroad shall propose an alternative Approved Work Schedule to the District for review and approval to accommodate the Project Work.

Section 15. <u>RAILROAD MAY SHUT DOWN WORK AND REMEDY DISRUPTION.</u>

a) Railroad, following short written notice or oral notice in the field to the District, USACE's contracting officer representative (if in connection with the initial construction of the Project improvements) and/or Contractor, as applicable, shall have the right to immediately shut down all Project Work on Standard's property and/or Railroad's property and require the removal

CONFORMED

of all persons, vehicles and equipment from such property without Railroad incurring any liability to the District, Contractor or any other person or entity, if a phase of Project Work:

i) has not been completed, or appears to Railroad that it cannot be completed, within a respective work window set forth in an Approved Work Schedule; or

ii) is being conducted in an unsafe manner, or in a manner that is inconsistent with or in breach of this Agreement; or

iii) is being conducted in a manner which violates government law, rules or regulations, including without limitation Federal Railroad Administration or Occupational Safety and Health Administration rules and regulations.

b) If any Project Work is shut down by Railroad pursuant to this Section 15, and Railroad's railway operating schedule is disrupted as a result, all subsequent work windows can be delayed or modified by Railroad until after Railroad fully recovers its railway operating schedule, at Railroad's sole discretion.

c) In the event that the Project Work is shut down by Railroad pursuant to this Section 15, Railroad shall propose an alternative Approved Work Schedule to the District and/or USACE, as applicable, for review and approval to accommodate the Project Work. Any such Approved Work Schedule proposed by Railroad and approved hereunder shall not take effect until the District has modified or corrected its work procedures in such a manner to ensure the District can complete its work in strict compliance with an Approved Work Schedule.

d) The District agrees that if the District, USACE or any of their Contractors are unable or appears not likely to quickly remedy any disruption to Railroad's operations beyond any authorized work window pursuant to an Approved Work Schedule, then Railroad, at the District's expense, has the right (but not the obligation) to immediately use Railroad's personnel and equipment (or contracted personnel and equipment) to remedy or reduce the disruption.

Section 16. <u>SITE TO BE LEFT NEAT AND CLEAN.</u>

Upon completion of Project and any Project Work, the District shall remove from Standard's property and Railroad's property, as applicable, all machinery, equipment, temporary structures, debris and rubbish related to the Project Work and leave such property in a neat and clean condition satisfactory to Railroad.

Section 17. <u>RAILROAD NOT TO BEAR ANY COST.</u>

It is expressly made a condition of this Agreement that neither Railroad nor Standard is obligated to bear any costs (whether direct or indirect) with respect to the Project and/or any Project Work.

CONFORMED

Section 18. WAIVER OF BREACH.

The waiver by Standard or Railroad of the breach of any term, condition, or covenant herein contained to be kept, observed and performed by the District shall in no way impair the right of Standard or Railroad, as applicable, to avail itself of any remedy for any subsequent breach thereof.

Section 19. AGREEMENT NOT TO BE ASSIGNED.

The District shall not assign this Agreement, in whole or in part, or any rights herein granted, without the written consent of Standard and Railroad, and it is agreed that any transfer or assignment or attempted transfer or assignment of this Agreement or any of the rights herein granted, whether voluntary, by operation of law, or otherwise, without such consent in writing, shall be absolutely void and, at the option of Standard and Railroad, shall terminate this Agreement.

Section 20. SUCCESSORS AND ASSIGNS.

Subject to the provisions of Section 19 hereof, this Agreement shall be binding upon and inure to the benefit of the parties hereto, their heirs, executors, administrators, successors and assigns.

Section 21. NOTICES.

Any notices required or desired to be given under this Agreement shall be in writing and personally served, given by overnight express delivery, or given by mail. Telecopy notices shall be deemed valid only to the extent they are (a) actually received by the individual to whom addressed and (b) followed by delivery of actual notice in the manner described above within three (3) business days thereafter. Any notice given by mail shall be sent, postage prepaid, by certified mail, return receipt requested, addressed to the party to receive at the following address or at such other address as such party may from time to time direct in writing:

Railroad:	UNION PACIFIC RAILROAD COMPANY ATTN: Assistant Vice President – Real Estate 1400 Douglas Street, Mail Stop 1690 Omaha, Nebraska 68179
Standard:	c/o UNION PACIFIC RAILROAD COMPANY ATTN: Assistant Vice President – Real Estate 1400 Douglas Street, Mail Stop 1690 Omaha, Nebraska 68179
District:	SANTA CLARA VALLEY WATER DISTRICT ATTN: CLERK OF THE BOARD 5750 Almaden Expressway San Jose, California 95118-3686

CONFORMED

Express delivery notices shall be deemed to be given upon receipt. Postal notices shall be deemed to be given upon deposit with the United States Postal Service.

CONFORMED

EXHIBIT C

TO CHANNEL IMPROVEMENT CONSTRUCTION & MAINTENANCE AGREEMENT

Form of Contractor's Right of Entry Agreement

(see attached)

CONFORMED

CONTRACTOR'S
RIGHT OF ENTRY AGREEMENT

THIS AGREEMENT (this "Agreement") is made and entered into as of the _____ day of _____, 20_____,
by and between **UNION PACIFIC RAILROAD COMPANY**, a Delaware corporation ("Railroad"); and _____, a _____ corporation ("Contractor").

RECITALS:

Contractor has been hired by _____ to perform work relating to the Santa Clara Valley Water District Channel Improvement Project (the "work"), with all or a portion of such work to be performed on property of Railroad in the vicinity of Railroad's Milepost 10.69 to 12.19 on Railroad's Milpitas Industrial Lead located at or near Milpitas in Santa Clara County, State of California as such location is in the general location shown on the print marked **Exhibit A**, attached hereto and hereby made a part hereof, which work is the subject of a contract dated May 27th, 2016 between Railroad and Santa Clara Valley Water District.

Railroad is willing to permit Contractor to perform the work described above at the location described above subject to the terms and conditions contained in this Agreement

AGREEMENT:

NOW, THEREFORE, it is mutually agreed by and between Railroad and Contractor, as follows:

ARTICLE 1 - DEFINITION OF CONTRACTOR.

For purposes of this Agreement, all references in this agreement to Contractor shall include Contractor's contractors, subcontractors, officers, agents and employees, and others acting under its or their authority.

ARTICLE 2 - RIGHT GRANTED; PURPOSE.

Railroad hereby grants to Contractor the right, during the term hereinafter stated and upon and subject to each and all of the terms, provisions and conditions herein contained, to enter upon and have ingress to and egress from the property described in the Recitals for the purpose of performing the work described in the Recitals above. The right herein granted to Contractor is limited to those portions of Railroad's property specifically described herein, or as designated by the Railroad Representative named in Article 4.

ARTICLE 3 - TERMS AND CONDITIONS CONTAINED IN EXHIBITS B, C AND D.

The terms and conditions contained in **Exhibit B, Exhibit C** and **Exhibit D**, attached hereto, are hereby made a part of this Agreement.

ARTICLE 4 - ALL EXPENSES TO BE BORNE BY CONTRACTOR; RAILROAD REPRESENTATIVE.

A. Contractor shall bear any and all costs and expenses associated with any work performed by Contractor, or any costs or expenses incurred by Railroad relating to this Agreement.

CONFORMED

B. Contractor shall coordinate all of its work with the following Railroad representative or his or her duly authorized representative (the "Railroad Representative"):

ROBERT J. BRENNAN
MGR TRACK MNTCE
37950 Central Court, Ste B
Newark, CA 94560
rjbrenna@up.com
Work Phone: 402 501-3774
Cell Phone: 402 594-5960

C. Contractor, at its own expense, shall adequately police and supervise all work to be performed by Contractor and shall ensure that such work is performed in a safe manner as set forth in Section 7 of **Exhibit B**. The responsibility of Contractor for safe conduct and adequate policing and supervision of Contractor's work shall not be lessened or otherwise affected by Railroad's approval of plans and specifications involving the work, or by Railroad's collaboration in performance of any work, or by the presence at the work site of a Railroad Representative, or by compliance by Contractor with any requests or recommendations made by Railroad Representative.

ARTICLE 5 - SCHEDULE OF WORK ON A MONTHLY BASIS.

The Contractor, at its expense, shall provide on a monthly basis a detailed schedule of work to the Railroad Representative named in Article 4B above. The reports shall start at the execution of this Agreement and continue until this Agreement is terminated as provided in this Agreement or until the Contractor has completed all work on Railroad's property.

ARTICLE 6 - TERM; TERMINATION.

A. The grant of right herein made to Contractor shall commence on the date of this Agreement, and continue until _____, unless sooner terminated as herein provided, or at such time as Contractor has completed its work on Railroad's property, whichever is earlier. Contractor agrees to notify the Railroad Representative in writing when it has completed its work on Railroad's property.

B. This Agreement may be terminated by either party on ten (10) days written notice to the other party.

ARTICLE 7 - CERTIFICATE OF INSURANCE.

A. Before commencing any work, Contractor will provide Railroad with the (i) insurance binders, policies, certificates and endorsements set forth in **Exhibit C** of this Agreement, and (ii) the insurance endorsements obtained by each subcontractor as required under Section 12 of **Exhibit B** of this Agreement.

B. All insurance correspondence, binders, policies, certificates and endorsements shall be sent to:

Union Pacific Railroad Company
Real Estate Department
1400 Douglas Street, Mail Stop 1690
Omaha, NE 68179-1690
Attn: UPRR Folder No. 02967-19

ARTICLE 8 - DISMISSAL OF CONTRACTOR'S EMPLOYEE.

At the request of Railroad, Contractor shall remove from Railroad's property any employee of

CONFORMED

Contractor who fails to conform to the instructions of the Railroad Representative in connection with the work on Railroad's property, and any right of Contractor shall be suspended until such removal has occurred. Contractor shall indemnify Railroad against any claims arising from the removal of any such employee from Railroad's property.

ARTICLE 9- <u>ADMINISTRATIVE FEE</u>.

Upon the execution and delivery of this Agreement, Contractor shall pay to Railroad Five Hundred Dollars ($500.00) as reimbursement for clerical, administrative and handling expenses in connection with the processing of this Agreement.

ARTICLE 10 - <u>CROSSINGS; COMPLIANCE WITH MUTCD AND FRA GUIDELINES.</u>

A. No additional vehicular crossings (including temporary haul roads) or pedestrian crossings over Railroad's trackage shall be installed or used by Contractor without the prior written permission of Railroad.

B. Any permanent or temporary changes, including temporary traffic control, to crossings must conform to the Manual of Uniform Traffic Control Devices (MUTCD) and any applicable Federal Railroad Administration rules, regulations and guidelines, and must be reviewed by the Railroad prior to any changes being implemented. In the event the Railroad is found to be out of compliance with federal safety regulations due to the Contractor's modifications, negligence, or any other reason arising from the Contractor's presence on the Railroad's property, the Contractor agrees to assume liability for any civil penalties imposed upon the Railroad for such noncompliance.

ARTICLE 11.- <u>EXPLOSIVES</u>.

Explosives or other highly flammable substances shall not be stored or used on Railroad's property without the prior written approval of Railroad.

IN WITNESS WHEREOF, the parties hereto have duly executed this agreement in duplicate as of the date first herein written.

UNION PACIFIC RAILROAD COMPANY

By:_____
Title:_____

_____
(Name of Contractor)

By:_____
Title:_____

CONFORMED

EXHIBIT A
TO
CONTRACTOR'S RIGHT OF ENTRY AGREEMENT

Exhibit A will be a print showing the general location of the work site.

CONFORMED

PARCEL #2 = 0.23 ACRES / 9,976 S.F.
PARCEL #1 = 0.38 ACRES / 16,742 S.F.
PARCEL #4 = 0.03 ACRES / 1,341 S.F.
PARCEL #5 = 0.14 ACRES / 6,230 S.F.
TEMPORARY LICENSE AREAS
PIEDMONT STRUCTURE
PARCEL #7 = 0.29 ACRES / 12,746 S.F.
PARCEL #6 = 0.11 ACRES / 4,800 S.F.
YOSEMITE
AMES
PIEDMONT
WRIGLEY
CREEK
DRIVE
MILPITAS
BLVD
TOWN CENTER
LINCOLN PROPERTIES
SIERRA CHEMICAL CO
MERITEX CHEMICAL CO
CONTINENTAL
EVARD
CAPITOL EXPY
LEGEND:
EASEMENT AREA
TEMPORARY LICENSE AREA
BRIDGE STRUCTURE
RESTATED EASEMENTS
UPRRCO. R/W OUTLINED
CADD FILENAME 0296719.DGN
SCAN FILENAME 0296719-CA45840.TIF
NOTE: BEFORE YOU BEGIN ANY WORK, SEE AGREEMENT FOR FIBER OPTIC PROVISIONS.
EXHIBIT "A"
PROJECT AREA
UNION PACIFIC RAILROAD COMPANY
MILPITAS, SANTA CLARA COUNTY, CA
M.P. 10.69 TO 12.19 – MILPITAS INDUSTRIAL LEAD
TO ACCOMPANY AGREEMENT WITH
SANTA CLARA VALLEY WATER DISTRICT
MP V-12 / 4
SCALE: 1" = 200'
OFFICE OF REAL ESTATE
OMAHA, NEBRASKA DATE: 5-23-2016
COB FILE: 2967-19

CONFORMED

EXHIBIT B
TO
CONTRACTOR'S RIGHT OF ENTRY AGREEMENT

Section 1. NOTICE OF COMMENCEMENT OF WORK - FLAGGING.

A. Contractor agrees to notify the Railroad Representative at least ten (10) working days in advance of Contractor commencing its work and at least thirty (30) working days in advance of proposed performance of any work by Contractor in which any person or equipment will be within twenty-five (25) feet of any track, or will be near enough to any track that any equipment extension (such as, but not limited to, a crane boom) will reach to within twenty-five (25) feet of any track. No work of any kind shall be performed, and no person, equipment, machinery, tool(s), material(s), vehicle(s), or thing(s) shall be located, operated, placed, or stored within twenty-five (25) feet of any of Railroad's track(s) at any time, for any reason, unless and until a Railroad flagman is provided to watch for trains. Upon receipt of such thirty (30)-day notice, the Railroad Representative will determine and inform Contractor whether a flagman need be present and whether Contractor needs to implement any special protective or safety measures. If flagging or other special protective or safety measures are performed by Railroad, Railroad will bill Contractor for such expenses incurred by Railroad, unless Railroad and a federal, state or local governmental entity have agreed that Railroad is to bill such expenses to the federal, state or local governmental entity. If Railroad will be sending the bills to Contractor, Contractor shall pay such bills within thirty (30) days of Contractor's receipt of billing. If Railroad performs any flagging, or other special protective or safety measures are performed by Railroad, Contractor agrees that Contractor is not relieved of any of its responsibilities or liabilities set forth in this Agreement.

B. The rate of pay per hour for each flagman will be the prevailing hourly rate in effect for an eight-hour day for the class of flagmen used during regularly assigned hours and overtime in accordance with Labor Agreements and Schedules in effect at the time the work is performed. In addition to the cost of such labor, a composite charge for vacation, holiday, health and welfare, supplemental sickness, Railroad Retirement and unemployment compensation, supplemental pension, Employees Liability and Property Damage and Administration will be included, computed on actual payroll. The composite charge will be the prevailing composite charge in effect at the time the work is performed. One and one-half times the current hourly rate is paid for overtime, Saturdays and Sundays, and two and one-half times current hourly rate for holidays. Wage rates are subject to change, at any time, by law or by agreement between Railroad and its employees, and may be retroactive as a result of negotiations or a ruling of an authorized governmental agency. Additional charges on labor are also subject to change. If the wage rate or additional charges are changed, Contractor (or the governmental entity, as applicable) shall pay on the basis of the new rates and charges.

C. Reimbursement to Railroad will be required covering the full eight-hour day during which any flagman is furnished, unless the flagman can be assigned to other Railroad work during a portion of such day, in which event reimbursement will not be required for the portion of the day during which the flagman is engaged in other Railroad work. Reimbursement will also be required for any day not actually worked by the flagman following the flagman's assignment to work on the project for which Railroad is required to pay the flagman and which could not reasonably be avoided by Railroad by assignment of such flagman to other work, even though Contractor may not be working during such time. When it becomes necessary for Railroad to bulletin and assign an employee to a flagging position in compliance with union collective bargaining agreements, Contractor must provide Railroad a minimum of five (5) days notice prior to the cessation of the need for a flagman. If five (5) days notice of cessation is not given, Contractor will still be required to pay flagging charges for the five (5) day notice period required by union agreement to be given to the employee, even though flagging is not required for that period. An additional thirty (30) days notice must then be given to Railroad if flagging services are needed again after such five day cessation notice has been given to Railroad.

CONFORMED

Section 2. LIMITATION AND SUBORDINATION OF RIGHTS GRANTED

A. The foregoing grant of right is subject and subordinate to the prior and continuing right and obligation of the Railroad to use and maintain its entire property including the right and power of Railroad to construct, maintain, repair, renew, use, operate, change, modify or relocate railroad tracks, roadways, signal, communication, fiber optics, or other wirelines, pipelines and other facilities upon, along or across any or all parts of its property, all or any of which may be freely done at any time or times by Railroad without liability to Contractor or to any other party for compensation or damages.

B. The foregoing grant is also subject to all outstanding superior rights (whether recorded or unrecorded and including those in favor of licensees and lessees of Railroad's property, and others) and the right of Railroad to renew and extend the same, and is made without covenant of title or for quiet enjoyment.

Section 3. NO INTERFERENCE WITH OPERATIONS OF RAILROAD AND ITS TENANTS.

A. Contractor shall conduct its operations so as not to interfere with the continuous and uninterrupted use and operation of the railroad tracks and property of Railroad, including without limitation, the operations of Railroad's lessees, licensees or others, unless specifically authorized in advance by the Railroad Representative. Nothing shall be done or permitted to be done by Contractor at any time that would in any manner impair the safety of such operations. Railroad shall be reimbursed by Contractor for train delay costs and lost revenue claims due to any delays or interruption of train operations resulting from Contractor's work or other activities. When not in use, Contractor's machinery and materials shall be kept at least fifty (50) feet from the centerline of Railroad's nearest track, and there shall be no vehicular crossings of Railroads tracks except at existing open public crossings.

B. Operations of Railroad and work performed by Railroad personnel and delays in the work to be performed by Contractor caused by such railroad operations and work are expected by Contractor, and Contractor agrees that Railroad shall have no liability to Contractor, or any other person or entity for any such delays. The Contractor shall coordinate its activities with those of Railroad and third parties so as to avoid interference with railroad operations. The safe operation of Railroad train movements and other activities by Railroad takes precedence over any work to be performed by Contractor.

Section 4. LIENS.

Contractor shall pay in full all persons who perform labor or provide materials for the work to be performed by Contractor. Contractor shall not create, permit or suffer any mechanic's or materialmen's liens of any kind or nature to be created or enforced against any property of Railroad for any such work performed. Contractor shall indemnify and hold harmless Railroad from and against any and all liens, claims, demands, costs or expenses of whatsoever nature in any way connected with or growing out of such work done, labor performed, or materials furnished. If Contractor fails to promptly cause any lien to be released of record, Railroad may, at its election, discharge the lien or claim of lien at Contractor's expense.

Section 5. PROTECTION OF FIBER OPTIC CABLE SYSTEMS.

A. Fiber optic cable systems may be buried on Railroad's property. Protection of the fiber optic cable systems is of extreme importance since any break could disrupt service to users resulting in business interruption and loss of revenue and profits. Contractor shall telephone Railroad during normal business hours (7:00 a.m. to 9:00 p.m. Central Time, Monday through Friday, except holidays) at 1-800-336-9193 (also a 24-hour, 7-day number for emergency calls) to determine if fiber optic cable is buried anywhere on Railroad's property to be used by Contractor. If it is, Contractor will telephone the telecommunications company(ies) involved, make arrangements for a cable locator and, if applicable, for relocation or other protection of the fiber optic cable. Contractor shall not commence any work until all such protection or relocation (if applicable) has been accomplished.

CONFORMED

b. In addition to other indemnity provisions in this Agreement, Contractor shall indemnify, defend and hold Railroad harmless from and against all costs, liability and expense whatsoever (including, without limitation, attorneys' fees, court costs and expenses) arising out of any act or omission of Contractor, its agents and/or employees, that causes or contributes to (1) any damage to or destruction of any telecommunications system on Railroad's property, and/or (2) any injury to or death of any person employed by or on behalf of any telecommunications company, and/or its contractor, agents and/or employees, on Railroad's property. Contractor shall not have or seek recourse against Railroad for any claim or cause of action for alleged loss of profits or revenue or loss of service or other consequential damage to a telecommunication company using Railroad's property or a customer or user of services of the fiber optic cable on Railroad's property.

Section 6. PERMITS - COMPLIANCE WITH LAWS.

In the prosecution of the work covered by this Agreement, Contractor shall secure any and all necessary permits and shall comply with all applicable federal, state and local laws, regulations and enactments affecting the work including, without limitation, all applicable Federal Railroad Administration regulations.

Section 7. SAFETY.

A. Safety of personnel, property, rail operations and the public is of paramount importance in the prosecution of the work performed by Contractor. Contractor shall be responsible for initiating, maintaining and supervising all safety, operations and programs in connection with the work. Contractor shall at a minimum comply with Railroad's safety standards listed in **Exhibit D**, hereto attached, to ensure uniformity with the safety standards followed by Railroad's own forces. As a part of Contractor's safety responsibilities, Contractor shall notify Railroad if Contractor determines that any of Railroad's safety standards are contrary to good safety practices. Contractor shall furnish copies of **Exhibit D** to each of its employees before they enter the job site.

B. Without limitation of the provisions of paragraph A above, Contractor shall keep the job site free from safety and health hazards and ensure that its employees are competent and adequately trained in all safety and health aspects of the job.

C. Contractor shall have proper first aid supplies available on the job site so that prompt first aid services may be provided to any person injured on the job site. Contractor shall promptly notify Railroad of any U.S. Occupational Safety and Health Administration reportable injuries. Contractor shall have a nondelegable duty to control its employees while they are on the job site or any other property of Railroad, and to be certain they do not use, be under the influence of, or have in their possession any alcoholic beverage, drug or other substance that may inhibit the safe performance of any work.

D. If and when requested by Railroad, Contractor shall deliver to Railroad a copy of Contractor's safety plan for conducting the work (the "Safety Plan"). Railroad shall have the right, but not the obligation, to require Contractor to correct any deficiencies in the Safety Plan. The terms of this Agreement shall control if there are any inconsistencies between this Agreement and the Safety Plan.

Section 8. INDEMNITY.

A. To the extent not prohibited by applicable statute, Contractor shall indemnify, defend and hold harmless Railroad, its affiliates, and its and their officers, agents and employees (individually an "Indemnified Party" or collectively "Indemnified Parties") from and against any and all loss, damage, injury, liability, claim, demand, cost or expense (including, without limitation, attorney's, consultant's and expert's fees, and court costs), fine or penalty (collectively, "Loss") incurred by any person (including, without limitation, any Indemnified Party, Contractor, or any employee of Contractor or of any Indemnified Party) arising out of or in any manner connected with (i) any work performed by Contractor, or (ii) any act or omission of Contractor, its officers, agents or employees, or (iii) any breach of this Agreement by Contractor.

CONFORMED

b. The right to indemnity under this Section 8 shall accrue upon occurrence of the event giving rise to the Loss, and shall apply regardless of any negligence or strict liability of any Indemnified Party, except where the Loss is caused by the sole active negligence of an Indemnified Party as established by the final judgment of a court of competent jurisdiction. The sole active negligence of any Indemnified Party shall not bar the recovery of any other Indemnified Party.

c. Contractor expressly and specifically assumes potential liability under this Section 8 for claims or actions brought by Contractor's own employees. Contractor waives any immunity it may have under worker's compensation or industrial insurance acts to indemnify the Indemnified Parties under this Section 8. Contractor acknowledges that this waiver was mutually negotiated by the parties hereto.

d. No court or jury findings in any employee's suit pursuant to any worker's compensation act or the Federal Employers' Liability Act against a party to this Agreement may be relied upon or used by Contractor in any attempt to assert liability against any Indemnified Party.

e. The provisions of this Section 8 shall survive the completion of any work performed by Contractor or the termination or expiration of this Agreement. In no event shall this Section 8 or any other provision of this Agreement be deemed to limit any liability Contractor may have to any Indemnified Party by statute or under common law.

Section 9. RESTORATION OF PROPERTY.

In the event Railroad authorizes Contractor to take down any fence of Railroad or in any manner move or disturb any of the other property of Railroad in connection with the work to be performed by Contractor, then in that event Contractor shall, as soon as possible and at Contractor's sole expense, restore such fence and other property to the same condition as the same were in before such fence was taken down or such other property was moved or disturbed. Contractor shall remove all of Contractor's tools, equipment, rubbish and other materials from Railroad's property promptly upon completion of the work, restoring Railroad's property to the same state and condition as when Contractor entered thereon.

Section 10. WAIVER OF DEFAULT.

Waiver by Railroad of any breach or default of any condition, covenant or agreement herein contained to be kept, observed and performed by Contractor shall in no way impair the right of Railroad to avail itself of any remedy for any subsequent breach or default.

Section 11. MODIFICATION - ENTIRE AGREEMENT.

No modification of this Agreement shall be effective unless made in writing and signed by Contractor and Railroad. This Agreement and the exhibits attached hereto and made a part hereof constitute the entire understanding between Contractor and Railroad and cancel and supersede any prior negotiations, understandings or agreements, whether written or oral, with respect to the work to be performed by Contractor.

Section 12. ASSIGNMENT - SUBCONTRACTING.

Contractor shall not assign or subcontract this Agreement, or any interest therein, without the written consent of the Railroad. Contractor shall be responsible for the acts and omissions of all subcontractors. Before Contractor commences any work, the Contractor shall, except to the extent prohibited by law; (1) require each of its subcontractors to include the Contractor as "Additional Insured" in the subcontractor's Commercial General Liability policy and Business Automobile policies with respect to all liabilities arising out of the subcontractor's performance of work on behalf of the Contractor by endorsing these policies with ISO Additional Insured Endorsements CG 20 26, and CA 20 48 (or substitute forms providing equivalent coverage; (2) require each of its subcontractors to endorse their Commercial General Liability Policy with "Contractual Liability Railroads" ISO Form CG 24 17 10 01 (or a

CONFORMED

substitute form providing equivalent coverage) for the job site; and (3) require each of its subcontractors to endorse their Business Automobile Policy with "Coverage For Certain Operations In Connection With Railroads" ISO Form CA 20 70 10 01 (or a substitute form providing equivalent coverage) for the job site.

CONFORMED

EXHIBIT C
TO
CONTRACTOR'S
RIGHT OF ENTRY AGREEMENT

Union Pacific Railroad Company
Insurance Provisions For
Contractor's Right of Entry Agreement

Section 1. REQUIRED INSURANCE.

Contractor shall, at its sole cost and expense, procure and maintain in effect during the entire term of this Agreement the following insurance coverage.

A. **Commercial General Liability** insurance. Commercial general liability (CGL) with a limit of not less than $5,000,000 each occurrence and an aggregate limit of not less than $10,000,000. CGL insurance must be written on ISO occurrence form CG 00 01 12 04 (or a substitute form providing equivalent coverage).

The policy must also contain the following endorsement, which must be stated on the certificate of insurance:

- Contractual Liability Railroads ISO form CG 24 17 10 01 (or a substitute form providing equivalent coverage) showing "Union Pacific Railroad Company Property" as the Designated Job Site.

B. **Business Automobile Coverage** insurance. Business auto coverage written on ISO form CA 00 01 (or a substitute form providing equivalent liability coverage) with a combined single limit of not less $2,000,000 for each accident.

The policy must contain the following endorsements, which must be stated on the certificate of insurance:

- Coverage For Certain Operations In Connection With Railroads ISO form CA 20 70 10 01 (or a substitute form providing equivalent coverage) showing "Union Pacific Property" as the Designated Job Site.
- Motor Carrier Act Endorsement - Hazardous materials clean up (MCS-90) if required by law.

C. **Workers' Compensation and Employers' Liability** insurance. Coverage must include but not be limited to:

- Contractor's statutory liability under the workers' compensation laws of the state where the Premises is located.
- Employers' Liability (Part B) with limits of at least $500,000 each accident, $500,000 disease policy limit $500,000 each employee.

If Contractor is self-insured, evidence of state approval and excess workers compensation coverage must be provided. Coverage must include liability arising out of the U.S. Longshoremen's and Harbor Workers' Act, the Jones Act, and the Outer Continental Shelf Land Act, if applicable.

D. **Railroad Protective Liability** insurance. Railroad Protective Liability insurance written on ISO occurrence form CG 00 35 12 04 (or a substitute form providing equivalent coverage) on behalf of Railroad as named insured, with a limit of not less than $2,000,000 per occurrence and an aggregate of $6,000,000. A binder stating the policy is in place must be submitted to Railroad before the work may be commenced and until the original policy is forwarded to Railroad.

CONFORMED

E. **Umbrella or Excess** insurance. If Contractor utilizes umbrella or excess policies, these policies must "follow form" and afford no less coverage than the primary policy.

Section 2. OTHER INSURANCE REQUIREMENTS.

A. All policy(ies) required above (except business automobile, workers' compensation and employers' liability) must include Railroad as "Additional Insured" using ISO Additional Insured Endorsement CG 20 26 (or substitute form(s) providing equivalent coverage). The coverage provided to Railroad as additional insured shall not be limited by Contractor's liability under the indemnity provisions of this Agreement. BOTH CONTRACTOR AND RAILROAD EXPECT THAT UNION PACIFIC RAILROAD COMPANY WILL BE PROVIDED WITH THE BROADEST POSSIBLE COVERAGE AVAILABLE BY OPERATION OF LAW UNDER ISO ADDITIONAL INSURED FORM CG 20 26.

B. [Intentionally omitted.]

C. Contractor waives all rights against Railroad and its agents, officers, directors and employees, where permitted by law, for recovery of damages to the extent these damages are covered by the workers compensation and employers liability or commercial umbrella/excess liability insurance obtained by Contractor required by this Agreement, which must be stated on the certificate of insurance.

D. Prior to commencing any work, Contractor shall furnish Railroad with a certificate(s) of insurance, executed by a duly authorized representative of each insurer, showing compliance with the insurance requirements in this Agreement.

E. All insurance policies must be written by a reputable insurance company acceptable to Railroad or with a current Best's Insurance Guide Rating of A- and Class VII or better, and authorized to do business in the state in which the Premises is located.

F. The fact that insurance is obtained by Contractor, or by Railroad on behalf of Contractor, will not be deemed to release or diminish the liability of Contractor, including, without limitation, liability under the indemnity provisions of this Agreement. Damages recoverable by Railroad from Contractor or any third party will not be limited by the amount of the required insurance coverage.

CONFORMED

EXHIBIT D
TO
CONTRACTOR'S RIGHT OF ENTRY AGREEMENT

MINIMUM SAFETY REQUIREMENTS

The term "employees" as used herein refer to all employees of Contractor as well as all employees of any subcontractor or agent of Contractor.

I. Clothing

A. All employees of Contractor will be suitably dressed to perform their duties safely and in a manner that will not interfere with their vision, hearing, or free use of their hands or feet.

Specifically, Contractor's employees must wear:

(i) Waist-length shirts with sleeves.
(ii) Trousers that cover the entire leg. If flare-legged trousers are worn, the trouser bottoms must be tied to prevent catching.
(iii) Footwear that covers their ankles and has a defined heel. Employees working on bridges are required to wear safety-toed footwear that conforms to the American National Standards Institute (ANSI) and FRA footwear requirements.

B. Employees shall not wear boots (other than work boots), sandals, canvas-type shoes, or other shoes that have thin soles or heels that are higher than normal.

C. Employees must not wear loose or ragged clothing, neckties, finger rings, or other loose jewelry while operating or working on machinery.

II. Personal Protective Equipment

Contractor shall require its employees to wear personal protective equipment as specified by Railroad rules, regulations, or recommended or requested by the Railroad Representative.

(i) Hard hat that meets the American National Standard (ANSI) Z89.1 – latest revision. Hard hats should be affixed with Contractor's company logo or name.
(ii) Eye protection that meets American National Standard (ANSI) for occupational and educational eye and face protection, Z87.1 – latest revision. Additional eye protection must be provided to meet specific job situations such as welding, grinding, etc.
(iii) Hearing protection, which affords enough attenuation to give protection from noise levels that will be occurring on the job site. Hearing protection, in the form of plugs or muffs, must be worn when employees are within:

- 100 feet of a locomotive or roadway/work equipment
- 15 feet of power operated tools
- 150 feet of jet blowers or pile drivers
- 150 feet of retarders in use (when within 10 feet, employees must wear dual ear protection – plugs and muffs)
-

(iv) Other types of personal protective equipment, such as respirators, fall protection equipment, and face shields, must be worn as recommended or requested by the Railroad Representative.

CONFORMED

III. On Track Safety

Contractor is responsible for compliance with the Federal Railroad Administration's Roadway Worker Protection regulations – 49CFR214, Subpart C and Railroad's On-Track Safety rules. Under 49CFR214, Subpart C, railroad contractors are responsible for the training of their employees on such regulations. In addition to the instructions contained in Roadway Worker Protection regulations, all employees must:

(i) Maintain a distance of twenty-five (25) feet to any track unless the Railroad Representative is present to authorize movements.
(ii) Wear an orange, reflectorized workwear approved by the Railroad Representative.
(iii) Participate in a job briefing that will specify the type of On-Track Safety for the type of work being performed. Contractor must take special note of limits of track authority, which tracks may or may not be fouled, and clearing the track. Contractor will also receive special instructions relating to the work zone around machines and minimum distances between machines while working or traveling.

IV. Equipment

A. It is the responsibility of Contractor to ensure that all equipment is in a safe condition to operate. If, in the opinion of the Railroad Representative, any of Contractor's equipment is unsafe for use, Contractor shall remove such equipment from Railroad's property. In addition, Contractor must ensure that the operators of all equipment are properly trained and competent in the safe operation of the equipment. In addition, operators must be:

- Familiar and comply with Railroad's rules on lockout/tagout of equipment.
- Trained in and comply with the applicable operating rules if operating any hy-rail equipment on-track.
- Trained in and comply with the applicable air brake rules if operating any equipment that moves rail cars or any other railbound equipment.

B. All self-propelled equipment must be equipped with a first-aid kit, fire extinguisher, and audible back-up warning device.

C. Unless otherwise authorized by the Railroad Representative, all equipment must be parked a minimum of twenty-five (25) feet from any track. Before leaving any equipment unattended, the operator must stop the engine and properly secure the equipment against movement.

D. Cranes must be equipped with three orange cones that will be used to mark the working area of the crane and the minimum clearances to overhead powerlines.

V. General Safety Requirements

A. Contractor shall ensure that all waste is properly disposed of in accordance with applicable federal and state regulations.

B. Contractor shall ensure that all employees participate in and comply with a job briefing conducted by the Railroad Representative, if applicable. During this briefing, the Railroad Representative will specify safe work procedures, (including On-Track Safety) and the potential hazards of the job. If any employee has any questions or concerns about the work, the employee must voice them during the job briefing. Additional job briefings will be conducted during the work as conditions, work procedures, or personnel change.

C. All track work performed by Contractor meets the minimum safety requirements established by the Federal Railroad Administration's Track Safety Standards 49CFR213.

CONFORMED

D. All employees comply with the following safety procedures when working around any railroad track:

(i) Always be on the alert for moving equipment. Employees must always expect movement on any track, at any time, in either direction.
(ii) Do not step or walk on the top of the rail, frog, switches, guard rails, or other track components.
(iii) In passing around the ends of standing cars, engines, roadway machines or work equipment, leave at least 20 feet between yourself and the end of the equipment. Do not go between pieces of equipment of the opening is less than one car length (50 feet).
(iv) Avoid walking or standing on a track unless so authorized by the employee in charge.
(v) Before stepping over or crossing tracks, look in both directions first.
(vi) Do not sit on, lie under, or cross between cars except as required in the performance of your duties and only when track and equipment have been protected against movement.

E. All employees must comply with all federal and state regulations concerning workplace safety.

CONFORMED

EXHIBIT D

TO CHANNEL IMPROVEMENT CONSTRUCTION & MAINTENANCE AGREEMENT

Section 1. SELF INSURANCE.

The District may self-insure all or a portion of the insurance coverage required by Section 2 of Exhibit D below, subject to Railroad's review and written approval of the District's Declaration of Self-Insurance (in the form of a letter from the District's Finance Department) certifying to Railroad that such risks are adequately covered by the financial resources of the District. The Railroad Protective Liability insurance required by Paragraph D of Section 2 below may not be self-insured.

Section 2. REQUIRED INSURANCE.

The District shall, at its sole cost and expense, (except for Railroad Protective Liability Insurance required in Paragraph D), procure and maintain in effect during the entire term of this Agreement the following insurance coverage. The District shall procure and maintain, or cause to be procured and maintained by its Contractor, at its sole cost and expense, Railroad Protective Liability Insurance coverage described in Paragraph D during any period of construction, maintenance, repair or reconstruction work.

A. Commercial General Liability insurance. Commercial general liability (CGL) with a limit of not less than $5,000,000 each occurrence and an aggregate limit of not less than $10,000,000. CGL insurance must be written on ISO occurrence form CG 00 01 12 04 (or a substitute form providing equivalent coverage).

The policy must also contain the following endorsement, which must be stated on the certificate of insurance:

- Contractual Liability Railroads ISO form CG 24 17 10 01 (or a substitute form providing equivalent coverage) showing "Union Pacific Railroad Company Property" as the Designated Job Site.

B. Business Automobile Coverage insurance. Business auto coverage written on ISO form CA 00 01 (or a substitute form providing equivalent liability coverage) with a combined single limit of not less $2,000,000 for each accident.

The policy must contain the following endorsements, which must be stated on the certificate of insurance:

- Coverage For Certain Operations In Connection With Railroads ISO form CA 20 70 10 01 (or a substitute form providing equivalent coverage) showing "Union Pacific Property" as the Designated Job Site.

CONFORMED

- Motor Carrier Act Endorsement - Hazardous materials clean up (MCS-90) if required by law.

C. **Workers Compensation and Employers Liability** insurance. Coverage must include but not be limited to:

- The District's and/or the District's contractor's statutory liability under the workers' compensation laws of the state where the job site is located.

- Employers' Liability (Part B) with limits of at least $500,000 each accident, $500,000 disease policy limit $500,000 each employee.

If the District, and/or the District's contractor, is self-insured, evidence of state approval and excess workers compensation coverage must be provided. Coverage must include liability arising out of the U.S. Longshoremen's and Harbor Workers' Act, the Jones Act, and the Outer Continental Shelf Land Act, if applicable.

D. **Railroad Protective Liability** insurance. Railroad Protective Liability insurance written on ISO occurrence form CG 00 35 12 04 (or a substitute form providing equivalent coverage) on behalf of Railroad as named insured, with a limit of not less than $2,000,000 per occurrence and an aggregate of $6,000,000. A binder stating the policy is in place must be submitted to Railroad before the work may be commenced and until the original policy is forwarded to Railroad.

E. **Umbrella or Excess** insurance. If the District, and/or the District's contractor, utilizes umbrella or excess policies, these policies must "follow form" and afford no less coverage than the primary policy.

Section 3. **OTHER INSURANCE REQUIREMENTS.**

A. All policy(ies) required above (except business automobile, worker's compensation and employers liability) must include Railroad as "Additional Insured" using ISO Additional Insured Endorsements CG 20 26 (or substitute form(s) providing equivalent coverage). The coverage provided to Railroad as additional insured shall not be limited by the District's liability under the indemnity provisions of this Agreement. BOTH THE DISTRICT AND RAILROAD EXPECT THAT UNION PACIFIC RAILROAD COMPANY WILL BE PROVIDED WITH THE BROADEST POSSIBLE COVERAGE AVAILABLE BY OPERATION OF LAW UNDER ISO ADDITIONAL INSURED FORM CG 20 26.

B. Punitive damages exclusion, if any, must be deleted (and the deletion indicated on the certificate of insurance), unless the law governing this Agreement prohibits all punitive damages that might arise under this Agreement.

C. The District waives all rights against Railroad and its agents, officers, directors and employees, where permitted by law, for recovery of damages to the extent that these damages are covered by the workers compensation and employers liability or commercial umbrella/excess liability insurance obtained by the District required by this Agreement, which must be stated on

CONFORMED

the certificate of insurance.

D. Prior to commencing any work, the District, and/or the District's Contractor, shall furnish Railroad with a certificate(s) of insurance, executed by a duly authorized representative of each insurer, showing compliance with the insurance requirements in this Agreement.

E. All insurance policies must be written by a reputable insurance company acceptable to Railroad or with a current Best's Insurance Guide Rating of A- and Class VII or better, and authorized to do business in the state where the job site is located.

F. The fact that insurance is obtained by the District, and/or Contractor, or by Railroad on behalf of the District, and/or Contractor, will not be deemed to release or diminish the liability of the District and Contractor, including, without limitation, liability under the indemnity provisions of this Agreement. Damages recoverable by Railroad from the District, Contractor or any third party will not be limited by the amount of the required insurance coverage.

CONFORMED

EXHIBIT E

TO CHANNEL IMPROVEMENT CONSTRUCTION & MAINTENANCE AGREEMENT

SPECIAL SAFETY REQUIREMENTS.

Safety of personnel, property, rail operations and the public is of paramount importance in the performance of the Project Work and subsequent work performed on and use of the Easement Property or Temporary License Area. As reinforcement and in furtherance of overall safety measures to be observed by the District (and not by way of limitation), the following special safety rules shall be followed:

a. The District's work force must be (and the District shall require any Contractor's work force to be) trained in accordance with all regulatory and Railroad safety requirements prior to performing any work at the job site or any other property of Standard or Railroad. Such training requirements may include eRailsafe Lite certification.

b. The District shall keep the job site free from safety and health hazards and ensure that its employees are competent and adequately trained in all safety and health aspects of the job. The District shall have proper first aid supplies available on the job site so that prompt first aid services can be provided to any person that may be injured on the job site. The District shall promptly notify Railroad of any U.S. Occupational Safety and Health Administration reportable injuries occurring to any person that may arise during activities or work performed on the job site. The District shall have a non-delegable duty to control its work force, while they are on the job site or any other property of Standard or Railroad to be certain they do not use, be under the influence of, or have in their possession any alcoholic beverage or illegally obtained drug, narcotic or other substance that may inhibit the safe performance of an activity or work.

c. The District's work force shall be suitably dressed to perform their duties safely and in a manner that will not interfere with their vision, hearing or free use of their hands or feet. Only waist length shirts with sleeves and trousers that cover the entire leg are to be worn. If flare-legged trousers are worn, the trouser bottoms must be tied to prevent catching. The work force should wear sturdy and protective footwear. The work force shall not wear boots (other than work boots), sandals, canvas-type shoes or other shoes that have thin soles or heels that are higher than normal. In addition, the District shall require its work force to wear personal protective equipment as specified by Railroad rules, regulations or Railroad officials overlooking the work at the job site. In particular, the protective equipment to be warn shall be:

(1) Protective head gear that meets American National Standard-Z89.1-latest revision. It is suggested that all hardhats be affixed with District's or Contractor's logo or name;

(2) Eye protection that meets American National Standard for occupational and educational eye and face protection, Z87.1-latest revision. Additional eye protection

CONFORMED

must be provided to meet specific job situations such as welding, grinding, burning, etc.; and

(3) Hearing protection which affords enough attenuation to give protection from noise levels that will be occurring on the job site.

d. All heavy equipment provided or leased by the District shall be equipped with audible back-up warning devices. If in the opinion of the Railroad Representative, any of District's or Contractor's equipment is unsafe for use on Standard's property and/or Railroad's property, the District, at the request of the Railroad Representative, shall immediately remove such equipment from Standard's property and/or Railroad's property, as applicable.

e. This Section shall not apply for any day to day use by the District for ingress and egress of those roadways located on the Easement Property that are separated from Railroad's trackage by a fence or that portion of the roadway adjacent thereto where the parties have permitted no fence to be installed due to clearance issues. For the avoidance of doubt, day to day use of the roadway for ingress or egress shall not include any work being performed on or about the roadway.

CONFORMED

EXHIBIT F

TO CHANNEL IMPROVEMENT CONSTRUCTION & MAINTENANCE AGREEMENT

Form of Easement Deed

(see attached)

CONFORMED

RECORD WITHOUT FEE UNDER SECTION 6103
GOVERNMENT CODE OF THE STATE OF CALIFORNIA

After Recording, Return To:

Real Estate Services Unit
Santa Clara Valley Water District
5750 Almaden Expressway
San Jose, California 95118

_____

(Space Above Reserved for County Recorder's Use)

Portion of APN: _____

Document No.: **[Insert Applicable District File Nos.]**

[Text applicable to the Easement Deed for property rights to be granted at Calaveras Blvd., Los Coches St., Yosemite Dr. and Montague Expwy. by Standard Realty and Development Company is preceded by "a:"]

[Text applicable to the Easement Deed for all other property rights to be granted by Standard Realty and Development Company is preceded by "b:"]

[Text applicable to the Easement Deed for property rights to be granted Union Pacific Railroad Company is preceded by "c:"]

CHANNEL IMPROVEMENT EASEMENT DEED

THIS CHANNEL IMPROVEMENT EASEMENT DEED (this "**Easement Deed**") is made this __ day of May, 2016 (the "**Effective Date**"), between **[a and b:** STANDARD REALTY AND DEVELOPMENT COMPANY, a California corporation **/c:** UNION PACIFIC RAILROAD COMPANY, a Delaware corporation**]** ("**Grantor**"), and SANTA CLARA VALLEY WATER DISTRICT, a special district created by the California legislature ("**Grantee**"), whose address is 5750 Almaden Expressway, San Jose, California 95118.

Grantor and Grantee have entered into that certain Channel Improvement Construction and Maintenance Agreement dated as of the Effective Date (the "**C&M Agreement**"), the terms and conditions of which are incorporated into this Easement Deed by reference, in connection with Grantee's Berryessa Creek Flood Risk Management Project and Grantee's use of the Premises (as such term is defined below). The provisions of this Easement Deed are in addition to, and not in limitation of, the C&M Agreement (including all subsequent supplements and modifications of the C&M Agreement).

CONFORMED

Grantor, for good and valuable consideration the receipt and sufficiency of which are hereby acknowledged, grants to Grantee, its successors and permitted assigns, non-exclusive, perpetual and assignable rights and easements (collectively, the "**Easements**") in Milpitas, Santa Clara County, California on, over and across the real property as described on the print marked **Exhibit A**, attached hereto and hereby made a part of this Easement Deed (the "**Premises**") for the limited purposes of: (i) constructing, inspecting, maintaining, repairing, renewing, using and operating channel improvement works, (ii) **[a:** Intentionally Omitted, **/b and c:** constructing, maintaining and using an access road in accordance with the Plans (as such term is defined in the C&M Agreement),**]** (iii) clearing, cutting, felling, removing and disposing of timber, trees, underbrush, buildings and/or other improvements from the Premises that impede or obstruct the flow of flood waters, and (iv) excavating, dredging, cutting away and removing land and placing dredge or spoil material on the Premises in accordance with the Plans; in each case reserving, however, to Grantor and its successors and assigns, all such rights and privileges in the Premises as may be used without interfering with or abridging the Easements acquired pursuant hereto. Notwithstanding the foregoing, Grantee agrees that it shall not remove any of Grantor's railroad facilities existing as of the Effective Date from the Premises (unless otherwise permitted by the Plans), and shall not remove any of Grantor's railroad facilities contemplated by the Plans or that may be constructed in the future by Grantor unless such future railroad facilities interfere with or abridge the Easements acquired hereunder. For the avoidance of doubt and without limiting any provisions contained in the C&M Agreement and this Easement Deed, Grantee shall obtain prior approval from Grantor, which approval shall not be unreasonably withheld, before commencing any work or the performance of any activity or work in which any person or equipment will be within twenty-five (25) feet of any track, as required in Exhibit B, Section 5 of the C&M Agreement.

The Easements are granted for the purposes described above only, and are subject to the terms and conditions of the C&M Agreement and this Easement Deed. Without limiting the foregoing, this grant does not include the right to install utilities of any nature, including without limitation, fiber optic, cable television, electrical, gas or liquid distribution, or telephone lines.

Grantor, its successors and assigns, reserves the right to use and maintain its entire property to construct, add, maintain, repair, renew, use, operate, change, modify or relocate railroad tracks, signal, communication, fiber optics and other railroad facilities upon, under, over, along or across any or all parts of its property, all or any of which may be freely done by Grantor; provided, however, that any use of the Premises shall not interfere with or abridge the rights and easements acquired by Grantee hereunder.

This Easement Deed is also subject to all outstanding superior rights (including without limitation those in favor of easement holders, licensees and lessees of Grantor's property, and others) and the right of the Grantor to renew and extend the same, and is made without covenant of title or for quiet enjoyment. It shall be Grantee's sole obligation to obtain such additional permission, licenses and grants necessary on account of any such existing rights. Notwithstanding the foregoing, Grantor understands and agrees that it shall not grant a future right in the Premises that expressly interferes with or abridges the Easements.

The Easements are also limited to such rights as Grantor may have in the Premises and is granted to and accepted by the Grantee in an **"AS IS," "WHERE IS"** and **"WITH ALL FAULTS"**

CONFORMED

basis and condition without warranty, express or implied. No damages shall be recoverable from Grantor because of any dispossession of Grantee or because of failure of, or defect in, Grantor's title.

The terms and conditions of this Easement Deed inure to and will bind Grantor's and Grantee's successors and assigns.

The Easements shall take effect upon the Effective Date and shall continue in full force and effect for as long as the channel improvements remain on the Premises, unless sooner terminated as provided in the C&M Agreement.

Within ninety (90) days after termination howsoever of the Easements or this Easement Deed, Grantee, at its sole expense, shall (i) peacefully and quietly vacate and surrender possession of the Premises, and (ii) deliver to Grantor a fully executed and acknowledged release and quitclaim of the Premises in recordable form satisfactory to Grantor.

CONFORMED

IN WITNESS WHEREOF, Grantor and Grantee have caused this Easement Deed to be executed as of the Effective Date.

Attest:

_____
Secretary

(Seal)

[a and b: STANDARD REALTY AND DEVELOPMENT COMPANY, a California corporation

By: _____
Tony K. Love, Chairman and CEO**]**

Attest:

_____
Secretary

(Seal)

[c: UNION PACIFIC RAILROAD COMPANY, a Delaware corporation

By: _____
Renay J. Robison, Director – Real Estate**]**

Attest: Michelle L. King, CMC

_____
Clerk/Board of Directors

SANTA CLARA VALLEY WATER DISTRICT, a special district created by the California legislature

By: _____
Printed Name: _____
Title: _____

CONFORMED

ACKNOWLEDGMENT

STATE OF NEBRASKA)
) ss.
COUNTY OF DOUGLAS)

On _____, 2016, before me, _____, Notary Public in and for said County and State, personally appeared _____ and _____, who are _____ and _____, respectively, of **[a and b:** Standard Realty and Development Company, a California corporation, **/c:** Union Pacific Railroad Company, a Delaware corporation,**]** and who are personally known to me (or proved to me on the basis of satisfactory evidence) to be the persons whose names are subscribed to in the within instrument, and acknowledged to me that they executed the same in their authorized capacities, and that by their signatures on the instrument the persons, or the entity upon behalf of which the persons acted, executed the instrument.

WITNESS my hand and official seal.

_____
Notary Public

(Seal)

CONFORMED

ACKNOWLEDGMENT

A NOTARY PUBLIC OR OTHER OFFICER COMPLETING THIS CERTIFICATE VERIFIES ONLY THE IDENTITY OF THE INDIVIDUAL WHO SIGNED THE DOCUMENT TO WHICH THIS CERTIFICATE IS ATTACHED, AND NOT THE TRUTHFULNESS, ACCURACY, OR VALIDITY OF THAT DOCUMENT.

STATE OF CALIFORNIA }
}
COUNTY OF _____ }

On _____, 201__, before me, _____, personally appeared _____, who proved to me on the basis of satisfactory evidence to be the person(s) whose name is subscribed to the within instrument and acknowledged to me that he executed the same in his authorized capacity, and that by his signature on the instrument the person, or the entity upon behalf of which the person acted, executed the instrument.

I certify under PENALTY OF PERJURY under the laws of the State of California that the foregoing paragraph is true and correct.

WITNESS my hand and official seal.

_____ (Notary Seal)
Signature of Notary Public

CONFORMED

EXHIBIT A
TO
EASEMENT DEED

Legal Description and Depiction of the Premises

(see attached)

CONFORMED

EXHIBIT G

TO CHANNEL IMPROVEMENT CONSTRUCTION & MAINTENANCE AGREEMENT

Form of Amended and Restated Easement Deed

(see attached)

CONFORMED

RECORD WITHOUT FEE UNDER SECTION 6103
GOVERNMENT CODE OF THE STATE OF CALIFORNIA

After Recording, Return To:

Real Estate Services Unit
Santa Clara Valley Water District
5750 Almaden Expressway
San Jose, California 95118

_____

(Space Above Reserved for County Recorder's Use)

Portion of APN: _____

Document No.: **[Insert Applicable District File Nos.]**

[Text applicable to the deed identified as 4017-09 to be amended and restated by Union Pacific Railroad Company is preceded by "a:"] Document No. 4017-99

[Text applicable to the deed identified as 4017-12 to be amended and restated by Union Pacific Railroad Company is preceded by "b:"] Document No. 4017-100

[Text applicable to the deed identified as 4017-49 to be amended and restated by Standard Realty and Development Company is preceded by "c:"] Document No. 4017-101

[Text applicable to the deed identified as 4017-51 to be amended and restated by Standard Realty and Development Company is preceded by "d:"] Document No. 4017-102

AMENDED AND RESTATED CHANNEL IMPROVEMENT EASEMENT DEED

THIS AMENDED AND RESTATED CHANNEL IMPROVEMENT EASEMENT DEED (this "**Easement Deed**") is made this ___ day of May, 2016 (the "**Effective Date**"), between **[a and b:** UNION PACIFIC RAILROAD COMPANY, a Delaware corporation **/c and d:** STANDARD REALTY AND DEVELOPMENT COMPANY, a California corporation**]** ("**Grantor**"), and SANTA CLARA VALLEY WATER DISTRICT, a special district created by the California legislature ("**Grantee**"), whose address is 5750 Almaden Expressway, San Jose, California 95118.

[a: Francis L. Wrigley and Beatrice C. Wrigley, as predecessors in interest to Grantor, and Grantee entered into that certain instrument dated as of April 7, 1955 and recorded in the Official Records of Santa Clara Valley on April 19, 1955 at Reception No. 1078040 (the "**Original Easement Deed**") whereby Grantor granted to Grantee an easement for a drainage ditch along and across the real property described in the Original Easement Deed. Grantor and Grantee now hereby desire to amend and restate the Original Easement Deed in its entirety.**]**

CONFORMED

[b: The Western Pacific Railroad Company, as predecessor in interest to Grantor, and Grantee entered into that certain instrument dated as of March 15, 1955 and recorded in the Official Records of Santa Clara Valley on April 19, 1955 at Reception No. 1078042 (the "**Original Easement Deed**") whereby Grantor granted to Grantee an easement for a drainage ditch along and across the real property described in the Original Easement Deed. Grantor and Grantee now hereby desire to amend and restate the Original Easement Deed in its entirety.**]**

[c: Grantor and Grantee entered into that certain Grant of Easement dated as of November 2, 1978 and recorded in the Official Records of Santa Clara Valley on November 13, 1978 at Reception No. 6198684 (the "**Original Easement Deed**") whereby Grantor granted to Grantee an easement for flood control and/or storm water purposes in, upon, over and across the real property described in the Original Easement Deed. Grantor and Grantee now hereby desire to amend and restate the Original Easement Deed in its entirety with respect to any real property described in the Original Easement Deed that is currently owned by Grantor, as such real property is described on the print marked **Exhibit A**, attached hereto and hereby made a part of this Easement Deed (the "**Premises**").**]**

[d: Grantor and Grantee entered into that certain Grant of Easement dated as of November 21, 1978 and recorded in the Official Records of Santa Clara Valley on December 21, 1978 at Reception No. 6238066 (the "**Original Easement Deed**") whereby Grantor granted to Grantee an easement for flood control and/or storm water purposes in, upon, over and across the real property described in the Original Easement Deed. Grantor and Grantee now hereby desire to amend and restate the Original Easement Deed in its entirety with respect to any real property described in the Original Easement Deed that is currently owned by Grantor, as such real property is described on the print marked **Exhibit A**, attached hereto and hereby made a part of this Easement Deed (the "**Premises**").**]**

Grantor and Grantee have entered into that certain Channel Improvement Construction and Maintenance Agreement dated as of the Effective Date (the "**C&M Agreement**"), the terms and conditions of which are incorporated into this Easement Deed by reference, in connection with Grantee's Berryessa Creek Flood Risk Management Project and Grantee's use of the Premises **[a and b:** (as such term is defined below)**]**. The provisions of this Easement Deed are in addition to, and not in limitation of, the C&M Agreement (including all subsequent supplements and modifications of the C&M Agreement).

Grantor, for good and valuable consideration the receipt and sufficiency of which are hereby acknowledged, grants to Grantee, its successors and permitted assigns, non-exclusive, perpetual and assignable rights and easements (collectively, the "**Easements**") in Milpitas, Santa Clara County, California on, over and across **[a and b:** the real property as described on the print marked **Exhibit A**, attached hereto and hereby made a part of this Easement Deed (the "**Premises**") **/c and d:** the Premises**]** for the limited purposes of: (i) constructing, inspecting, maintaining, repairing, renewing, using and operating channel improvement works, (ii) **[a and b:** Intentionally Omitted, **/c and d:** constructing, maintaining and using an access road in accordance with the Plans (as such term is defined in the C&M Agreement) (the "**Access Road**",**]** (iii) clearing, cutting, felling, removing and disposing of timber, trees, underbrush, buildings and/or other improvements from the Premises that impede or obstruct the flow of flood waters, and (iv) excavating, dredging, cutting away and removing land and placing dredge or

CONFORMED

spoil material on the Premises in accordance with the Plans; in each case reserving, however, to Grantor and its successors and assigns, all such rights and privileges in the Premises as may be used without interfering with or abridging the Easements acquired pursuant hereto. Notwithstanding the foregoing, Grantee agrees that it shall not remove any of Grantor's railroad facilities existing as of the Effective Date from the Premises (unless otherwise permitted by the Plans), and shall not remove any of Grantor's railroad facilities contemplated by the Plans or that may be constructed in the future by Grantor unless such future railroad facilities interfere with or abridge the Easements acquired hereunder. For the avoidance of doubt and without limiting any provisions contained in the C&M Agreement and this Easement Deed, Grantee shall obtain prior approval from Grantor, which approval shall not be unreasonably withheld, before commencing any work or the performance of any activity or work in which any person or equipment will be within twenty-five (25) feet of any track **[c and d:** (with the exception of the use of the portion of the Access Road separated from Grantor's property or operations by fencing in accordance with the Plans for the limited purposes of ingress and egress to and from the channel improvement works which Grantor acknowledges does not require prior approval)**]**, as required in Exhibit B, Section 5 of the C&M Agreement.

The Easements are granted for the purposes described above only, and are subject to the terms and conditions of the C&M Agreement and this Easement Deed. Without limiting the foregoing, this grant does not include the right to install utilities of any nature, including without limitation, fiber optic, cable television, electrical, gas or liquid distribution, or telephone lines.

Grantor, its successors and assigns, reserves the right to use and maintain its entire property to construct, add, maintain, repair, renew, use, operate, change, modify or relocate railroad tracks, signal, communication, fiber optics and other railroad facilities upon, under, over, along or across any or all parts of its property, all or any of which may be freely done by Grantor; provided, however, that any use of the Premises shall not interfere with or abridge the rights and easements acquired by Grantee hereunder.

This Easement Deed is also subject to all outstanding superior rights (including without limitation those in favor of easement holders, licensees and lessees of Grantor's property, and others) and the right of the Grantor to renew and extend the same, and is made without covenant of title or for quiet enjoyment. It shall be Grantee's sole obligation to obtain such additional permission, licenses and grants necessary on account of any such existing rights. Notwithstanding the foregoing, Grantor understands and agrees that it shall not grant a future right in the Premises that expressly interferes with or abridges the Easements.

The Easements are also limited to such rights as Grantor may have in the Premises and is granted to and accepted by the Grantee in an **"AS IS," "WHERE IS"** and **"WITH ALL FAULTS"** basis and condition without warranty, express or implied. No damages shall be recoverable from Grantor because of any dispossession of Grantee or because of failure of, or defect in, Grantor's title.

The terms and conditions of this Easement Deed inure to and will bind Grantor's and Grantee's successors and assigns.

CONFORMED

The Easements shall take effect upon the Effective Date and shall continue in full force and effect for as long as the channel improvements remain on the Premises, unless sooner terminated as provided in the C&M Agreement.

Within ninety (90) days after termination howsoever of the Easements or this Easement Deed, Grantee, at its sole expense, shall (i) peacefully and quietly vacate and surrender possession of the Premises, and (ii) deliver to Grantor a fully executed and acknowledged release and quitclaim of the Premises in recordable form satisfactory to Grantor.

IN WITNESS WHEREOF, Grantor and Grantee have caused this Easement Deed to be executed as of the Effective Date.

Attest:

_____
Secretary

(Seal)

[c and d: STANDARD REALTY AND DEVELOPMENT COMPANY, a California corporation

By: _____
Tony K. Love, Chairman and CEO**]**

Attest:

_____
_____ Secretary

(Seal)

[a and b: UNION PACIFIC RAILROAD COMPANY, a Delaware corporation

By: _____
Renay J. Robison, Director – Real Estate**]**

Attest: Michelle L. King, CMC

_____
Clerk/Board of Directors

SANTA CLARA VALLEY WATER DISTRICT, a special district created by the California legislature

By: _____
Printed Name: _____
Title: _____

CONFORMED

ACKNOWLEDGMENT

STATE OF NEBRASKA)
) ss.
COUNTY OF DOUGLAS)

On _____, 2016, before me, _____, Notary Public in and for said County and State, personally appeared _____ and _____, who are _____ and _____, respectively, of **[c and d:** Standard Realty and Development Company, a California corporation, **/a and b:** Union Pacific Railroad Company, a Delaware corporation,**]** and who are personally known to me (or proved to me on the basis of satisfactory evidence) to be the persons whose names are subscribed to in the within instrument, and acknowledged to me that they executed the same in their authorized capacities, and that by their signatures on the instrument the persons, or the entity upon behalf of which the persons acted, executed the instrument.

WITNESS my hand and official seal.

_____
Notary Public

(Seal)

CONFORMED

ACKNOWLEDGMENT

A NOTARY PUBLIC OR OTHER OFFICER COMPLETING THIS CERTIFICATE VERIFIES ONLY THE IDENTITY OF THE INDIVIDUAL WHO SIGNED THE DOCUMENT TO WHICH THIS CERTIFICATE IS ATTACHED, AND NOT THE TRUTHFULNESS, ACCURACY, OR VALIDITY OF THAT DOCUMENT.

STATE OF CALIFORNIA }
}
COUNTY OF _____ }

On _____, 201__, before me, _____, personally appeared _____, who proved to me on the basis of satisfactory evidence to be the person(s) whose name is subscribed to the within instrument and acknowledged to me that he executed the same in his authorized capacity, and that by his signature on the instrument the person, or the entity upon behalf of which the person acted, executed the instrument.

I certify under PENALTY OF PERJURY under the laws of the State of California that the foregoing paragraph is true and correct.

WITNESS my hand and official seal.

_____ (Notary Seal)
Signature of Notary Public

CONFORMED

EXHIBIT A
TO
EASEMENT DEED

Legal Description and Depiction of the Premises

(see attached)

CONFORMED

EXHIBIT H

TO CHANNEL IMPROVEMENT CONSTRUCTION & MAINTENANCE AGREEMENT

Estimate

(see attached)

CONFORMED

EXHIBIT H

UNION PACIFIC RAILROAD COMPANY

SUMMARY ESTIMATE SHEET

Location: Milpitas Industrial Lead, Milpitas, California

DOT No. 833901Y, MP 11.67

Project: Wooden Trestle replacement

Estimate:

Flagging($1500 / day) x 30 days	$45,000
Remove rail from existing bridge, Remove track structure from adjacent grade crossing,	
Install new track structure over new culvert and through grade crossing,	
Install ties in approaches to grade crossing and culvert (UP Forces)	$302,588
Engineering Review and Inspection	$25,000
Subtotal	$372,588
Contingency (10%)	$37,259
Total estimate cost:	**$409,547**

***Note:** This is an estimate only. Railroad shall bill on an actual cost basis.

CONFORMED

EXHIBIT H

DATE: 2016-05-20

ESTIMATE OF MATERIAL AND FORCE ACCOUNT WORK
BY THE
UNION PACIFIC RAILROAD

THIS ESTIMATE GOOD FOR 6 MONTHS EXPIRATION DATE IS :2016-11-18

DESCRIPTION OF WORK:
MILPITAS,CA/ MILTPITAS BLVD./ DOT 833901Y/ MILPITAS INDU LEAD, MP 11.67
INSTALL 104 TF CONCRETE XING-CURVED 15 DEGREE, 115# RAIL, 10W TIES.
REPLACE TRACK ACROSS FORMER BRIDGE BEING RETIRED BY OTHERS.
PROJECT IS 100% RECOLLECTABLE, 50% FROM THE FEDERAL SOURCES AND 50% FROM
LOCAL SOURCES, USING THE FEDERAL LABOR ADDITIVE RATE W. OVERHEAD AND

PID: 95436 AWO: MP,SUBDIV: 11.67, MILPITASIN
SERVICE UNIT: 19 CITY: MILPITAS STATE: CA

DESCRIPTION	QTY	UNIT	LABOR	MATERIAL	RECOLL	UPRR	TOTAL
ENGINEERING WORK							
ENGINEERING			2266		2266		2266
FLAGGING			2220		2220		2220
TRACK SUPERVISORS			2220		2220		2220
LABOR ADDITIVE 234.24			15693		15693		15693
TOTAL ENGINEERING			22399		22399		22399
TRACK & SURFACE WORK							
BALAST/SURFACE & LINE	4.00	CL	5111	3838	8949		8949
BILL PREP FEE				900	900		900
ENVIRONMENTAL PERMITS				10	10		10
EQUIPMENT RENTAL				2500	2500		2500
FIELD WELDING			6451	548	6999		6999
FOREIGN LINE FREIGHT				1210	1210		1210
HOMELINE FREIGHT				900	900		900
ROADWAY APPROACH				10000	10000		10000
OTM			6532	10454	16986		16986
RAIL	640.00	LF	16972	10598	27570		27570
RDXING-CURVED, 15D00M	104.00	TF	5773	41308	47081		47081
SAW CUT CONTRACT				2000	2000		2000
TRACK-INSTAL			3835	10000	13835		13835
XTIE	199.00	EA	21124	17218	38342		38342
SALES TAX				2723	2723		2723
MATL STORE EXPENSE				956	956		956
LABOR ADDITIVE 234.24%			99228		99228		99228
TOTAL TRACK & SURFACE			165026	115163	280189		280189
LABOR/MATERIAL EXPENSE			187425	115163			
RECOLLECTIBLE/UPRR EXPENSE					302588	0	
ESTIMATED PROJECT COST							302588
EXISTING REUSEABLE MATERIAL CREDIT					0		
SALVAGE NONUSEABLE MATERIAL CREDIT					0		
RECOLLECTIBLE LESS CREDITS					$302588		

THE ABOVE FIGURES ARE ESTIMATES ONLY AND SUBJECT TO FLUCTUATION. IN THE EVENT OF AN INCREASE OR DECREASE IN THE COST OR QUANTITY OF MATERIAL OR LABOR REQUIRED, UPRR WILL BILL FOR ACTUAL CONSTRUCTION COSTS AT THE CURRENT EFFECTIVE RATE.

FILE:EENG205.TSO.EPM.ESTIMATE(P095436A)

CONFORMED

For Information Purposes Only

CONFORMED

Appendix K

County of Santa Clara Encroachment Permit

CONFORMED

SANTA CLARA COUNTY ROADS AND AIRPORTS DEPARTMENT

ENCROACHMENT PERMIT # 27 160191

INSPECTIONS REQUIRED!

TO SCHEDULE INSPECTIONS CALL 408-573-2429

24 HOURS BEFORE STARTING ANY WORK

27 160191

THE COUNTY OF SANTA CLARA 1850

KEEP THIS PERMIT ON JOBSITE

SEE ATTACHMENTS FOR PERMIT REQUIREMENTS

Permit Number	Date Issued	Expiration Date
27 160191	16-May-16	16-Aug-16

Issued By: Gerry Dutra

Date Completed

Date Cancelled

Construction Insp. By

Electrical Insp. By

Permit Office Final Date

PERMITTEE

Name **Judy Nam** Phone **(408) 630-2474**

Company **Santa Clara Valley Water District** E-Mail: **Jnam@valleywater.org**

Mailing Address: **5750 Almaden Expressway, A-2144** Fax:

City: **San Jose** State **Ca** Zip **95118**

LOCATION OF WORK

Address

Road Name: **Montague Expressway**

Cross Street: **Berryessa Creek / near S. Milpitas Blvd**

Work Order No:

Locaide: 25-40-79 Zone 2

DESCRIPTION OF WORK

See Attached MEMORANDUM - Exhibit A for "Bidding Purposes Only" dated May 10, 2016.

GENERAL PROVISIONS

All requirements and provisions contained within the attached General Provisions document must be abided by at all times unless noted otherwise.

SPECIAL PROVISIONS In addition to the attached General Provisions the following Special Provisions apply:

See attached MEMORANDUM - Exhibit A for "Bidding Purposes Only", General Provisions, Additional Special Provisions - Expressways, Project Plans (U.S. Army Corps of Engineers - San Francisco District In Cooperation with SCVWD, Upper Berryessa Creek Flood Risk Management Project), and Extension Fee Schedule.

FEES	Plan Check	Inspection	* Trench Cut	Permit Fee	**Deposit Amount	☑ No Fee
	$0.00	$0.00	$0.00	$0.00	$0.00	

** IF PERMIT HAS A WBS NO. THE TOTAL ENCROACHMENT PERMIT FEE IS AN ESTIMATED DEPOSIT; REFUND OR ADDITIONAL FEE WILL BE DETERMINED AFTER ENCROACHMENT PERMIT IS SIGNED OFF AND ACCOUNTING IS COMPLETE. *NOTE: Trench cut to be measured upon completion, and an additional fee assessed for it.

BONDS	AMOUNT	TYPE	RELEASE DATE
	$0.00		

Roads Dept Engineer D. Boyd

SP #:

****WBS:** 603-90-

CONFORMED

FOR BIDDING PURPOSES ONLY

27-160191

CONFORMED

FOR BIDDING PURPOSES ONLY

County of Santa Clara

Roads and Airports Department

101 Skyport Drive
San Jose, California 95110-1302
(408) 573-2400

MEMORANDUM – Exhibit 'A'

FOR BIDDING PURPOSES ONLY
27-160191

DATE: May 10, 2016

TO: **Judy Nam,** Project Manager
SCVWD

FROM: **David Boyd**
Land Development Services

SUBJECT: **Clearance for a County *Conditional* Encroachment Permit**
CONDITIONAL PERMIT - SCVWD and U.S. Army Corp of Engineers are implementing the Upper Berryessa Creek Flood Risk Management Project, which will enlarge 2.2 miles of Berryessa Creek to provide 1% flood protection. The project will require reconstruction of the channel within County R&A property located downstream of the Montague Expressway Bridge crossing Berryessa Creek.

FILE NO./JOB: **160191**

LOCATION: **Montague Expressway crossing Berryessa Creek**

SPECIAL PROJECT NOTES:

There is a 5-yr warranty when the project is completed (Reference to County Ordiance NS-7039, Section B17-36.4). County's Roads Operations Engineering will be the one to determine what constitue failure based on acceptable industry standards including cracks and separation in the microsurfacing, settlement where the trench repairs took place, damaged pavement edges along the trenches are considered failures.

Erosion and Sediment Control Notes:

1. "The Utility Company, their employees, subcontractors, and/or any person performing construction activities shall install and maintain construction Best Management Practices (BMPs) on the project site and within the Santa Clara County Road Right of Way throughout the duration of construction and until the establishment of permanent stabilization and sediment control to prevent the discharge of pollutants including sediment, construction materials, excavated materials, waste materials into the Santa Clara County Road Right of Way, storm sewer waterways, and roadway infrastructure. BMPs shall include, but not be limited to, the following:
    a. Prevention of pollutants in storm water discharges from the construction site and the contractor's material and equipment laydown/staging areas,
    b. Prevention of tracking of mud, dirt and construction materials onto public road right of way, and
    c. Prevention of discharge of water runoff during dry and wet weather conditions onto public road right of way."

"FOR BIDDING PURPOSES ONLY"

CONFORMED

CONFORMED

FOR BIDDING PURPOSES ONLY
27-160191

2. "The Utility Company, their employees, subcontractors, and/or any person performing construction activities shall ensure that all temporary construction facilities, including but not limited to construction materials, deliveries, hazardous and non-hazardous material storage, equipment, tools, portable toilets, concrete washout, garbage containers, laydown yards, secondary containment areas, etc. are located outside the Santa Clara County Road Right of Way."

Improvement Plan Construction Notes:

1. "All Work in the County Road Right of Way requires an encroachment permit from the Roads and Airports Department. Each individual activity requires a separate permit – i.e. retaining walls, driveway approaches, temporary construction entrances, fences, landscaping, tree removal, storm drainage improvements, all utility operations (relocations, replacements, abandonments, temporary facilities, and/or new facilities for cable, electric, gas, sewer, water), etc."

2. "Roadways designated as Not County maintained roads as shown upon this plan, will not be eligible for County maintenance until the roadways are improved (at no cost to the County) to public maintenance road standards approved by the Board of Supervisors and in effect at such time that the roadways are considered for acceptance into the County's Road System."

95% Plan Check Review Comments for Conditional Permit:

A. Referring to the retaining wall at the southeast corner of the bridge referring to sheet C-108, the Army Corps plans do show that the Water District will tie into the Montague channel at the transition at 164+42.96, which is already stated on the plans as transitioning from 12' to 16'.

B. Referring to the 18' access road on the east side of the creek, south of the bridge where there is no access to Montague Expressway. Per the Water District's review, the 20' wide access road will not be shown on the typical cross section because that section is for the entire length of channel on those particular sheets. The Water District will modify the following note on the plan view: "*prop access road PIP (VTA)" to "prop access road by VTA: PIP and transition from 16'* "

C. Grading will need to be coordinated by all parties within the Montague project depending upon who gets there first.

D. Any traffic control set-up MUST be coordinated with the County of Santa Clara, City of Milpitas, SCVWD, UPPRR, VTA, and County Contractor's OC JONES and Sons.

E. Any potholes that are found within the County ROW will need to be repaired by the SCVWD contractor related to this project.

It is recommended that a County ***Conditional*** Encroachment Permit "for bidding purposes only" be issued to ***Santa Clara Valley Water District*** per the preliminary terms and conditions, as well as the following Special Provisions which may be subject to change and/or revision.

1. Prior to construction, Applicant shall conduct a preconstruction meeting involving the County inspector, Applicant's representatives and any contractor working on this project.
2. Protect County underground traffic signal and fiber optics facilities. ***Call USA 48 hours prior to performing work. Refer to all of Standard Specification Section 86 relating to Signals, Lighting, Traffic Communications & Other Electrical Systems.***
3. Any damage to the existing county fiber optic cable will result in replacement of the fiber cable from existing end-to-end splices in accordance with the permit provision in section II subsection 6.A thru 6.E
4. Fiber Optic trunk line belonging to Santa Clara County Roads & Airports in area of work. Any vehicle detection loops damaged by work are to be replaced in 48hrs.

CONFORMED

CONFORMED

5. *Contractor needs to recess all steel plates and plates are traffic rated non-skid plates after each shift!!*
6. Contractor shall be responsible for restoring pavement to like or better condition.
7. Any excavation shall conform with County Standard drawing U/3A with the requirement that pavement section shall match existing. Please refer to ***Additional Special Provisions – Expressways Only.***
8. After project is completed Contractor **MUST** supply the county red-line as built for our records & use. The County will require to have all compaction reports when the project is completed.
9. Prior to start of any construction activity the contractor shall request a construction encroachment permit. Submit a traffic control plan to the County. **The County may take at least three (3) weeks to review the plan and may request revisions prior to issuing the encroachment permit for construction use.** When the Traffic Control Plan is completed please contact the permit issuance unit at 1.408.573.2475.
10. For any striping in County ROW to be thermoplastic and replaced per existing striping. County traffic section to approve striping layout prior to final installation.
11. Working hours 9:00am to 3:00pm Monday through Friday (only).
12. The Contractor **MUST** notify all business and residents of pending construction work.
13. Slurry from pavement/curb cutting shall be vacuum and disposed properly. Any stock pile excavated material to be covered by a tarp. No dirt/debris shall be tracked or washed into storm drain (**Montague Expressway**). Do not broadcast spoils on-site. Sweep daily or as directed by County. Excavated materials shall be disposed off-site properly at approved site.

Attachments: U.S Army Corps of Engineers – San Francisco District In Cooperation with Santa Clara Valley Water District. Upper Berryessa Creek Flood Risk Management Project, Santa Clara County, California
Additional Special Provisions – Expressways Only.

Please call me at 573-2450 if you have any questions.
Cc: File# 160191, DB, RC

"FOR BIDDING PURPOSES ONLY"
CONFORMED
FOR BIDDING PURPOSES ONLY
27-160191

CONFORMED

FOR BIDDING PURPOSES ONLY
27-160191

GENERAL PROVISIONS

I. WORK REQUIREMENTS

1. **Inspection** – The Permittee shall request initial inspection from the County at 408-573-2429 a minimum of twenty-four (24) hours prior to any work being performed. The Permittee shall request final inspection from the County within ten (10) days from the date of completion of the work at 408-573-2429.

2. **Legal Enforcement** – Work under the Encroachment Permit (Permit) must comply with provisions in the following references, whether or not they are set forth herein:
   - California Streets and Highways Code,
   - California State Water Resources Control Board NPDES General Permit for Storm Water Discharges Associated with Construction & Land Disturbance Activities (Order No. 2009-0009-DWQ or any amendment thereof),
   - California Regional Water Quality Control Board, San Francisco Bay Region, Municipal Regional Storm Water NPDES Permit (Order No. R2-2009-0074, NPDES Permit No. CAS612008, October 14, 2009, or any amendment thereof),
   - Central Coast Regional Water Quality Control Board, Revised Regional Storm Water Management Plan for City of Gilroy, City of Morgan Hill, and County of Santa Clara (South County) (February 22, 2010 or any amendments thereof),
   - County of Santa Clara Ordinance Code,
   - County of Santa Clara Standard Details and Standard Specifications,
   - Local ordinances and regulations of applicable municipality where the work is located, and
   - Other regulatory agencies.

3. **General Instructions** – All work is to be completed in accordance with these General Provisions attached to the Permit, any special provisions or conditions shown on the Permit itself. Work plans and specifications, required bonds and insurance, must be submitted, approved and on file in the Roads and Airports Department (hereinafter County) prior to issuance of the Permit. If additional engineering, soils investigations or geological investigations are required, they shall be provided by the Permittee. All survey work including construction staking shall be provided by the Permittee.

4. **Emergency Contacts** – Names and telephone numbers of two responsible persons shall be furnished to the Permit Office prior to start of work for emergency contacts, 24 hours a day, seven days a week. The Permittee or the Contractor shall have a supervisory representative available for contact on the project at all times during the construction.

5. **On Site** – This Permit shall be kept at the site of work and must be shown to any authorized representative of the County or any law enforcement officer upon demand.

CONFORMED

6. **Equipment and Material Storage** – No equipment (construction or other) or material shall be stored within the County ROW near the edge of the pavement, within the traveled way, or within the shoulder line which would create a hazardous condition or nuisance for the traveling public. Any material stored at the site of work must be shown to any authorized representative of the Department or any law enforcement officer upon demand. All proposed construction staging areas shall be presented to the Department for review and approval prior to use

7. **Traffic Protection** – The Permittee shall make adequate provisions for the protection of the traveling public. Two copies of a proposed traffic control plan shall be submitted to the Permit Office for processing prior to issuance of a permit. All work which requires a traffic detour requires the Permittee to notify Santa Clara County Communications at (408) 299-2501 and the appropriate local garbage collection company of the date(s), time(s) and details of all detours.

8. **Traffic Lanes** – All traffic lanes shall be open to the traveling public during all hours of darkness, and on all weekends and holidays unless prior written approval is obtained from the County. One-way traffic may be permitted under the control of not less than two competent flagmen or as required by the latest issue of the California Manual on Uniform Traffic Control Devices for Streets and Highways during normal working hours with prior approval in writing from the County. No variance of the requirements of this Section **I.7.** will be allowed without prior written approval from the County. No work within the ROW shall be undertaken until all materials, equipment, and labor forces are available to pursue the work to completion.

9. **Signs** – Any signs to be constructed in the execution of this Permit are to be approved by the County prior to placement of any signs.

10. **Temporary Traffic Control** – Temporary traffic control, including traffic control devices and signs, shall be installed in accordance with Part 2 – Signs, Part 6 – Temporary Traffic Control and any other applicable parts of the latest issue of the California Manual on Uniform Traffic Control Devices for Streets and Highways.

11. **Drainage** – If the work performed by the Permittee interferes with the established surface drainage pattern ample provision shall be made by the Permittee to provide for said drainage with prior approval in writing from the County before any work is performed. If there are any negative impacts to the established surface drainage patterns the Permittee shall take immediate steps to mitigate the negative impacts and restore the surface drainage patterns existing prior to any work being performed to the County's satisfaction and at no cost to the County.

12. **Permanent Monuments** – Any property corner stake, street monument or other permanent survey monument that will be disturbed during construction

CONFORMED

shall be shown on the plans for the work and referenced, removed and reset by competent persons legally qualified to perform this work.

13. **Facility Relocation** – Permittee shall be responsible for any required relocation, and cost thereof, of existing utilities or encroachments which may be affected by this Permit.

14. **Monument Corner Records** – Section 8771 of the Business and Professional Code, and Section 732, 149.5, and 810.5 of the Streets and Highways Code, Rev. 1995, mandates that prior to any reconstruction or relocation of streets or highways, all survey monuments are to be located and referenced to stable objects outside the construction area by or under the direction of a person authorized to practice land surveying. A corner record which shows the reference ties is to be filed in the office of the County Surveyor. After construction, permanent monuments are to be reset and a second corner record shall be filed. The Permittee is responsible for the cost of this work.

15. **Sight Distance** – As related to and affected by the improvements covered by this Permit, Permittee shall provide and maintain adequate sight distance per the latest Caltrans standards. Typical compliance may include, but not limited to, trimming and/or removal of trees; trimming and/or removal of vegetation; and, grading of embankments to provide for adequate sight distance. Before and after photos shall be taken by the Permittee and provided to the County for the files and reference as needed. Any costs associated with these photos shall be the sole responsibility of the Permittee.

16. **Storm Water Pollution Prevention** – The work performed under this Permit is subject to the National Pollutant Discharge Elimination System (NPDES) regulations governed by State, San Francisco Bay Regional Water Quality Control Board for work sites located in the north County San Francisco Bay watersheds in (Region 2), and Central Coast Regional Water Quality Control Board for work sites located in the South County Monterey Bay watersheds (Region 3). (The following link will help to find the Regional Water Board for a particular work site: http://www.waterboards.ca.gov/waterboards_map.shtml.)

    The County of Santa Clara Department of Roads & Airports, as the designated Owner of the public road and expressway facilities where the work occurs, is responsible for preventing and/or mitigating potential chemical release, erosion, and sedimentation impacts associated with storm water runoff that discharges to a municipal separate storm drain system or waterway.

    A. With respect to prevention and mitigation of construction-related storm water impacts to the public road and expressway facilities, the Permittee must develop and submit a Storm Water Pollution Prevention Plan (SWPPP) for review and approval by the County prior to the start of construction. The Permittee must implement the SWPPP during construction. The SWPPP may be developed as part of the entire project site's SWPPP and must identify appropriate storm water pollution prevention and treatment measures or Best Management Practices (BMPs)

CONFORMED

including, but not limited to, to the following practices applicable to the public road and expressway facilities:

a. Reduction of pollutants in storm water discharges from the construction site and the contractor's material and equipment laydown/staging site in connection with construction activities.
b. Prevention of tracking of mud, dirt and construction materials onto public streets and expressways from the construction and equipment/material lay-down/staging sites.
c. Prevention of discharge of water runoff during dry and wet weather onto public streets and expressways from the construction and equipment/material lay-down/staging site.
d. Prevention of soil erosion and sedimentation from construction and equipment/material lay-down/staging sites entering public street and expressway right-of-ways.

The Permittee must maintain at the construction site the County-approved SWPPP, and revise the SWPPP as necessary or required by the County or the regulatory agency if, during construction, conditions (such as change in construction operations, construction staging modification, change in site conditions, or offsite drainage impacts) occur that affect the ability to implement the SWPPP effectively or the ability of the SWPPP to meet the objectives for water pollution control.

For improvements for which construction disturbs one acre of land or more, the Permittee must, in addition to preparing a SWPPP, obtain coverage under the State Construction General Permit and file a Notice of Intent with the State Water Resources Control Board prior to commencement of construction. (For details, go to: www.swrcb.ca.gov/water_issues/programs/stormwater/construction.shtml).

B. The following manuals are available to assist the Permittee in developing the SWPPP for the on-site and off-site improvements:

a. Guidelines for Construction Projects prepared by California Regional Water Quality Control Board (available for purchase on DVD at http://store.abag.ca.gov/construction.asp#e); and
b. Erosion and Sediment Control Field Manual (4th Edition) prepared by the California Regional Water Quality Control Board (available for purchase on DVD at http://store.abag.ca.gov/construction.asp#e); and
c. Storm Water Best Management Practice Handbook for Construction Activity (November 2009 or latest edition) prepared by California Storm Water Quality Association (available by subscription at https://www.casqa.org/casqastore/entitiy/tabid/169/c-4-best-management-practice-bmp-handbooks.aspx).

C. Exemptions:

CONFORMED

a. SWPPP preparation and submittal by the Permittee is not required for the following types of projects:

i. Improvements related to individual detached single-family homes, such as construction, repair or replacement of sidewalk, curb and gutter, and/or driveway with impervious surface, that are not part of a larger plan of development <u>and</u> that disturb less than one acre of land.

ii. Activities related to maintenance and improvement of existing utilities including, but not limited to, routine maintenance, scheduled and emergency repairs, and abandoning and/or upgrading utility lines and associated facilities.

iii. Construction activities related to installation of new underground and/or overhead utilities (such as conduits, substructures, pipelines, towers, poles, cables, wires, connectors and other associated equipment) including, but not limited to, potholing, concrete and asphalt removal and replacement, trenching, excavation, boring and drilling, and pipeline and substructure installations, that disturb less than one acre of land.

b. For projects that receive exemptions under Section I.16.C.a., the Permittee and its contractor must implement best management practices (BMPs) to prevent construction materials, excavated materials, waste materials, and sediment caused by erosion during construction activities, on-site or off-site, from entering the storm drain system and waterways.

c. For projects that are exempt under Section **I.16.C.a**, the Permittee must also comply with the BMP Checklist furnished by the County.

II. PERMIT PROVISIONS

1. **Revocation** – This Permit is revocable in accordance with the procedures and requirements of California Streets and Highways Code.

2. **Indemnification** – The Permittee shall fully indemnify, defend, and hold harmless the County of Santa Clara (hereinafter "County"), it's officers, agents and employees from any claim, liability, loss, injury or damage arising out of, or in connection with, performance of this Agreement by the Permittee, it's Contractor and/or it's agents, employees or Subcontractors, excepting only loss, injury or damage caused by the sole negligence or willful misconduct of personnel employed by the County. It is the intent of the parties to this Agreement to provide the broadest possible coverage for the County. The Permittee shall reimburse the County for all costs including, but not limited to, attorneys' fees, expenses and liabilities incurred with respect to any litigation in which the Permittee is obligated to indemnify, defend and hold harmless the County under this Agreement.

A. Issuance of a permit authorizing construction does not release the Developer, Permittee or its Engineer from the responsibility for the correction of errors or omissions contained in the plans. If, during the

CONFORMED

course of the construction, the public interest requires a modification of (or departure from) the specifications and/or plans, the County shall have the authority to require:

a. The suspension of work;
b. The necessary modification to the specifications and/or plans; and,
c. To specify the manner in which the same is to be made.

Any cost associated with this Section **II.2.A** shall be the sole responsibility of the Permittee.

3. **Insurance** – The Permittee shall obtain insurance as required by the County in the attached exhibit and shall provide a certificate of insurance verifying such insurance to the County prior to any work being performed. The County, its officers, employees and agents shall be named as additional insured.

4. **Bonds** – The Permittee shall obtain a performance bond in the amount indicated when required by the County as a condition of the permit and shall provide a certified copy of the bond verifying such bond in the amount required by the County.

5. **Bond Release** – If a Performance bond is posted, it will be released by the County after a written request for a final inspection and verification by the County the work has been satisfactorily completed. Release of the Performance bond is subject to the Permittee providing any Maintenance bond or Deferred Maintenance Agreement required by the County.

6. **Damages Caused by Permittee/Repairs** – All necessary repairs resulting from the encroachment permit work shall be made in accordance with County standards and specifications at the sole expense of the Permittee. The Permittee is required to repair any damage caused by the Permittee or the Contractors as a consequence of labor performed under the Permit within the time indicated by the County. If the Permittee fails to make the repairs within the time indicated, the County is authorized to repair the damage and recover all cost incurred, including overhead and administrative costs, from the Permittee, the surety or the insurance carrier.

   A. Prior to any construction activity in the vicinity of the fiber-optic facilities (i.e., conduit, fiber-optic cable, pull-box, splice enclosure, termination panel, and any related fiber-optic improvements), the Permittee or the Contractor shall pothole to locate, identify, and provide necessary precautionary measures to protect the existing fiber-optic facilities within the project limits from being damaged by construction activities. Potholing in dirt areas shall be performed by hand - no power tools or equipment shall be used.

   B. If the fiber-optic facilities are damaged by the Permittee or the Contractor, the Permittee or the Contractor shall make the necessary repair to the damaged fiber-optic facilities in accordance with Section 86.01.06 "Maintaining Existing and/or Temporary Electrical Systems and Traffic

CONFORMED

Communication Systems" of the County Standard Specifications and the following.

C. Repair and replacement of damaged fiber-optic cable and related facilities shall be performed as follows:

a. Within 48 hours of the damage occurring, the Permitee or the Contractor shall temporarily splice the fiber-optic cable using mechanical or fusion splicing, at the sole discretion of the County. After completion of temporary repairs, the County will determine whether the end equipment operates satisfactorily. If not, the County may direct the Permittee to replace the temporary splice within 48 hours. This shall be considered an interim repair only to restore service. The Permittee or the Contractor shall permanently repair other damaged facilities such as conduit and pull-box, unless prior written approved is obtained otherwise from the County.

The repair shall be undertaken in the nearest junction box, by pulling available slack in the cable. If, in the determination of the County, insufficient slack is available, a new junction box shall be installed as directed.

b. Within 30 days after the acceptance of the interim repair by the County, the Permittee or its Contractor shall obtain a modified encroachment permit and replace the damaged cable between the system's end-to-end splice points installed during the initial installation (as shown on the Fiber Splicing Details Map available for review in the Engineering Office of Traffic and Electrical Operations). During this permanent repair process, the fiber-optic cable shall not be disconnected or the equipment communicating on the cable shall not become non-operational for more than 48 hours. A seven (7) day notice shall be given to the Permit Inspection Unit of the Roads and Airports Department by calling (408) 573-2429 or faxing to (408) 441-0143 prior to any work associated with the repair of the fiber-optic cable. The replacement cable shall be of length and type equivalent to the replaced cable. Cable material, installation and testing shall meet the requirements of the County Standard Specifications as follows:

i. Section 86.02.08E "Fiber-optic Cable",
ii. Section 86.02.09C "Installation of Fiber-optic Cable",
iii. Section 86.02.09O(1) "Fiber-optic Connectors",
iv. Section 86.02.09E(2) "Fiber-optic Cable Splicing",
v. Section 86.02.09G "Fiber-optic Splice Enclosure", and
vi. Section 86.02.13D "Fiber-optic Cable Testing". OTDR and power meter tests shall be done after the repair to assure that a light loss is within the maximum allowable loss. This loss shall be determined by comparison of the test results with OTDR test results on file at the County, derived from the most recent test on each fiber. The OTDR test shall be performed on each fiber strand. The power

CONFORMED

meter test shall be performed only on fibers terminated on both ends. Both tests shall be done at 1,550 nm and 1,310 nm. The Permittee or the Contractor shall record all test results and provide the results to the County for review and acceptance. All testing shall be observed by a representative of the County.

D. In the event that the Permittee or the Contractor fail to make the necessary repairs and/or replacement of the fiber-optic facilities within the timeframe as specified herein, the County may perform the necessary repairs and/or replacement, interim and permanent, of the damaged facilities and recover all costs and expenses in accordance with these General Conditions of the Permit.

E. The Permittee or the Contractor shall guarantee the repair work for a period of one (1) year from the date of acceptance of the work by the County in accordance with Section 5.17 "Correction of Work and Guarantee" of the County Standard Specifications.

7. **Private Property** – This Permit shall not be construed as authorization for excavation and/or grading on private property adjacent to the encroachment or any other work for which a separate permit may be required.

   A. This Permit shall not be construed as authorization for any work for which a separate permit may be required – i.e. a driveway permit does NOT include utility work of any kind; a permit to connect water is separate from a permit to connect gas, electric, or communication.

8. **Relocation Responsibility** – In the event future improvement of the road necessitates relocation of the encroachment authorized by this Permit, the Permittee shall relocate same at their sole expense.

9. **Contracts and Agreements** – This Permit does not release the Permittee from any liabilities contained in other agreements or contracts with the County and other municipal agencies.

10. **Acceptance** – Commencement of any work under this Permit shall constitute acceptance of the conditions and requirements of the permit for the installation or future maintenance of the encroachment whether or not the Permit is signed by said person or an authorized representative of said person, firm or corporation.

CONFORMED

County of Santa Clara – Roads and Airports Department
101 Skyport Drive, San Jose, CA 95110
(408) 573-2475 www.countyroads.org

STORMWATER POLLUTION PREVENTION BEST MANAGEMENT PRACTICES CHECKLIST FOR ALL ACTIVITIES WITHIN THE RIGHT OF WAY (ROW) ACKNOWLEDGEMENT SHEET

Introduction

The County of Santa Clara Roads and Airports Department requires applicants for encroachment permits to comply with certain General Provisions related to stormwater pollution prevention. Construction activities related to maintenance and improvement of existing utilities and installation of new utilities that disturb less than one acre of land are exempt from Encroachment Permit General Provision 16.A. but must implement best management practices (BMPs) to prevent stormwater pollution.

Permittee shall determine the appropriate BMPs to be checked below for the activities being performed within or adjacent to the County right-of-way as part of the permitted project. Additional BMPs may be required if field conditions change or additional stormwater pollution prevention measures are required by the County. For more information, please contact the Roads and Airports Department at (408) 573-2429.

Sediment Control BMPs

X *SE-5 Fiber Rolls*

A fiber roll consists of straw, coir, or other biodegradable materials bound into a tight tubular roll wrapped by netting, which can be photodegradable or natural. When fiber rolls are placed at the bottom of slopes along contours, they intercept runoff, reduce its velocity, release the runoff as sheet flow, allow sedimentation, and also reduce sheet and rill erosion until vegetation is established

X *SE-7 Street Sweeping and Vacuuming*

Sweeping and vacuuming are needed to remove sediment wherever it is tracked from the project site onto public or private paved streets and roads, typically at points of egress. After sweeping is finished, sweeper waste should be properly disposed of at an approved dumpsite.

X *SE-10 Storm Drain Inlet Protection*

Storm drain inlet protection consists of a sediment filter or an impounding area in, around or upstream of a storm drain, drop inlet, or curb inlet to prevent sediment from discharging to the storm drain. Storm drain inlet protection measures temporarily pond runoff before it enters the storm drain, allowing sediment to settle. Temporary geotextile storm drain inserts that attach underneath storm drain grates to capture and filter storm water can also be used. Inlet protection options can be used in combination with the following BMPs:

- ☐ *SE-6 Gravel Bag Berm* - A gravel bag berm is a series of gravel-filled bags placed on a level contour to intercept sheet flows, pond runoff, and allow sediment to settle out.
- ☐ *SE-8 Sandbag Barrier* - A sandbag barrier consists of a row of sand-filled bags placed on a level contour to intercept sheet flows, pond runoff, and allow sediment to settle out. Sandbag barriers should generally be used in conjunction with temporary soil stabilization.
- X *TC-1 Stabilized Construction Entrance/Exit*

  The purpose of a stabilized construction entrance/exit is to reduce or eliminate the tracking of sediment onto public rights of way. A stabilized construction entrance /exit is a pad of aggregate underlain with filter cloth located at a point where traffic will be entering or leaving a construction site.

CONFORMED

FOR BIDDING PURPOSES ONLY
27-160191

Good Site Management BMPs

X *WM-1Materials Delivery and Storage*
The discharge of stormwater pollutants from construction material delivery and storage areas can be prevented or reduced by minimizing the storage of hazardous materials onsite, storing materials in watertight containers and/or containing the storage area with a berm or on an enclosed pad, and conducting regular inspections.

☐ *WM-3 Stockpile Management*
All stockpiles of construction materials (such as soil, soil amendments, sand, pressure treated wood, and paving materials such as Portland cement concrete rubble, asphalt concrete, asphalt concrete rubble, aggregate base, aggregate sub-base or pre-mixed aggregate, and asphalt binder) should be covered with a tarp and protected with a temporary linear sediment barrier prior to the onset of precipitation.

X *Waste Management*
Waste management includes storing materials properly to reduce the possibility of spills, stopping the source of spills, and the immediate containment, clean-up and proper disposal of spilled materials. Solid, liquid and sanitary waste should be properly disposed. Designated waste collection areas and containers should be provided and regular disposal services arranged. All waste containers should be covered. Temporary sanitary facilities should be located away from storm drains and traffic areas.

X *WM-8 Concrete Waste Management*
Stockpile management BMPs should be used to ensure that construction materials, including mortar, concrete, stucco, cement and block, and their associated wastes do not come into contact with stormwater flows. Concrete trucks should be washed only in contained concrete washout areas so that there is no discharge of concrete waste onto site soils or into storm drains.

Non Stormwater Management

☐ *NS-3 Paving and Grinding Operations*
Stockpile management, sediment control and inlet protection BMPs should be implemented to prevent paving and grinding materials or wastes from entering storm drains. When feasible, paving during the rainy season should be avoided. Waste materials should not be washed or swept into storm drains. During saw-cutting and grinding operations, use as little water as possible. Block storm drain inlets using inlet protection BMPs and/or use absorbent materials to contain slurry. Remove saw-cut slurry, using a shovel, vacuum, or dry sweeping, as soon as possible.

X *NS-6 Illicit Discharge*
The site should be inspected before beginning the job for evidence of illicit connections to the storm drain, illegal dumping or discharges. Any pre-existing conditions should be documented and the owner notified. Employees and sub-contractors should be trained to use BMPs to prevent any material from entering storm drains.

X *NS-12 Concrete Curing, NS-13 Concrete Finishing*
Storm drain inlet protection BMPs should be implemented before conducting concrete curing and/or sandblasting. Water from curing and sandblasting operations should be directed to contained collection areas (so that there is no discharge to underlying soils or surrounding areas) and then properly disposed.

CONFORMED

Good Site Management BMPs

X *WM-1Materials Delivery and Storage*

The discharge of stormwater pollutants from construction material delivery and storage areas can be prevented or reduced by minimizing the storage of hazardous materials onsite, storing materials in watertight containers and/or containing the storage area with a berm or on an enclosed pad, and conducting regular inspections.

☐ *WM-3 Stockpile Management*

All stockpiles of construction materials (such as soil, soil amendments, sand, pressure treated wood, and paving materials such as Portland cement concrete rubble, asphalt concrete, asphalt concrete rubble, aggregate base, aggregate sub-base or pre-mixed aggregate, and asphalt binder) should be covered with a tarp and protected with a temporary linear sediment barrier prior to the onset of precipitation.

X *Waste Management*

Waste management includes storing materials properly to reduce the possibility of spills, stopping the source of spills, and the immediate containment, clean-up and proper disposal of spilled materials. Solid, liquid and sanitary waste should be properly disposed. Designated waste collection areas and containers should be provided and regular disposal services arranged. All waste containers should be covered. Temporary sanitary facilities should be located away from storm drains and traffic areas.

X *WM-8 Concrete Waste Management*

Stockpile management BMPs should be used to ensure that construction materials, including mortar, concrete, stucco, cement and block, and their associated wastes do not come into contact with stormwater flows. Concrete trucks should be washed only in contained concrete washout areas so that there is no discharge of concrete waste onto site soils or into storm drains.

Non Stormwater Management

☐ *NS-3 Paving and Grinding Operations*

Stockpile management, sediment control and inlet protection BMPs should be implemented to prevent paving and grinding materials or wastes from entering storm drains. When feasible, paving during the rainy season should be avoided. Waste materials should not be washed or swept into storm drains. During saw-cutting and grinding operations, use as little water as possible. Block storm drain inlets using inlet protection BMPs and/or use absorbent materials to contain slurry. Remove saw-cut slurry, using a shovel, vacuum, or dry sweeping, as soon as possible.

X *NS-6 Illicit Discharge*

The site should be inspected before beginning the job for evidence of illicit connections to the storm drain, illegal dumping or discharges. Any pre-existing conditions should be documented and the owner notified. Employees and sub-contractors should be trained to use BMPs to prevent any material from entering storm drains.

X *NS-12 Concrete Curing, NS-13 Concrete Finishing*

Storm drain inlet protection BMPs should be implemented before conducting concrete curing and/or sandblasting. Water from curing and sandblasting operations should be directed to contained collection areas (so that there is no discharge to underlying soils or surrounding areas) and then properly disposed.

CONFORMED

FOR BIDDING PURPOSES ONLY
27-160191

County of Santa Clara – Roads and Airports Department
101 Skyport Drive, San Jose, CA 95110
(408) 573-2475 www.countyroads.org

STORMWATER POLLUTION PREVENTION BEST MANAGEMENT PRACTICES CHECKLIST FOR ALL ACTIVITIES WITHIN THE RIGHT OF WAY (ROW) ACKNOWLEDGEMENT SHEET

Introduction

The County of Santa Clara Roads and Airports Department requires applicants for encroachment permits to comply with certain General Provisions related to stormwater pollution prevention. Construction activities related to maintenance and improvement of existing utilities and installation of new utilities that disturb less than one acre of land are exempt from Encroachment Permit General Provision 16.A. but must implement best management practices (BMPs) to prevent stormwater pollution.

Permittee shall determine the appropriate BMPs to be checked below for the activities being performed within or adjacent to the County right-of-way as part of the permitted project. Additional BMPs may be required if field conditions change or additional stormwater pollution prevention measures are required by the County. For more information, please contact the Roads and Airports Department at (408) 573-2429.

Sediment Control BMPs

X *SE-5 Fiber Rolls*

A fiber roll consists of straw, coir, or other biodegradable materials bound into a tight tubular roll wrapped by netting, which can be photodegradable or natural. When fiber rolls are placed at the bottom of slopes along contours, they intercept runoff, reduce its velocity, release the runoff as sheet flow, allow sedimentation, and also reduce sheet and rill erosion until vegetation is established

X *SE-7 Street Sweeping and Vacuuming*

Sweeping and vacuuming are needed to remove sediment wherever it is tracked from the project site onto public or private paved streets and roads, typically at points of egress. After sweeping is finished, sweeper waste should be properly disposed of at an approved dumpsite.

X *SE-10 Storm Drain Inlet Protection*

Storm drain inlet protection consists of a sediment filter or an impounding area in, around or upstream of a storm drain, drop inlet, or curb inlet to prevent sediment from discharging to the storm drain. Storm drain inlet protection measures temporarily pond runoff before it enters the storm drain, allowing sediment to settle. Temporary geotextile storm drain inserts that attach underneath storm drain grates to capture and filter storm water can also be used. Inlet protection options can be used in combination with the following BMPs:

- ☐ *SE-6 Gravel Bag Berm* - A gravel bag berm is a series of gravel-filled bags placed on a level contour to intercept sheet flows, pond runoff, and allow sediment to settle out.
- ☐ *SE-8 Sandbag Barrier* - A sandbag barrier consists of a row of sand-filled bags placed on a level contour to intercept sheet flows, pond runoff, and allow sediment to settle out. Sandbag barriers should generally be used in conjunction with temporary soil stabilization.

X *TC-1 Stabilized Construction Entrance/Exit*

The purpose of a stabilized construction entrance/exit is to reduce or eliminate the tracking of sediment onto public rights of way. A stabilized construction entrance /exit is a pad of aggregate underlain with filter cloth located at a point where traffic will be entering or leaving a construction site.

CONFORMED

County of Santa Clara – Roads and Airports Department
101 Skyport Drive, San Jose, CA 95110
(408) 573-2475 www.countyroads.org

References

California Stormwater Quality Association (CASQA) Construction BMP Handbook, November 2009. (Available by subscription only at www.casqa.org)

State Water Resources Control Board, NPDES General Permit for Storm Water Discharges Associated with Construction Activity, Water Quality Order 2009-0009-DWQ, September 2009 (effective July 1, 2010).

Santa Clara Valley Urban Runoff Pollution Prevention Program, 2004 Urban Runoff Management Plan, Performance Standard and Supporting Documents for Public Streets, Roads, and Highways Operation and Maintenance, September 1, 2004.

Acknowledgement/ Agreement:

I (We), the Owner(s) of the subject property, the Utility Company, or the applicant performing work in the County Road Right of Way (ROW) have read and understood the Roads and Airports Best Management Practices Checklist for Stormwater Pollution Prevention and shall ensure that all work occurring within the County of Santa Clara ROW requires the implementation of construction Best Management Practices (BMPs) for storm water pollution prevention in conformance with either the Municipal Regional Permit (north county) or National Pollutant Discharge Elimination System Phase II Small Municipal Separate Storm Sewer System General Permit (south county).

Santa Clara Valley Water District	Judy Nam, Project Manager
Print Owner, Utility Company's Representative or Applicant Name	Owner, Utility's Representative, or Applicant Signature
Berryessa Creek at Montague Expressway Cossing, Milpitas, CA	April 14, 2016
Print Project Location Legibly	Date

CONFORMED

For Office Staff only:			
ENCROACHMENT PERMIT NO(S):			
LAND DEVELOPMENT FILE NO:			
BUILDING PLAN CHECK NO:			
RWQCB SF:	X	RWQCB Central Coast:	

FOR BIDDING PURPOSES ONLY
27-160191

CONFORMED

County of Santa Clara

Roads and Airports Department

101 Skyport Drive
San Jose, California 95110

FOR BIDDING PU... ES ONLY

27-160191

Encroachment Permit No.: 27-160191 Location: Montague Expwy crossing Berryessa Creek / S. Mipitas Blvd

Additional Special Provisions – Expressways Only

Work is subject to County Ordinance Code B-17, County Standard Specifications, County Standard Plans and Details, State of California, Department of Transportations (Caltrans) Standard Specifications and Standard Plans, latest issue.

Only boxes with are ☑ apply to this permit.

Warning signs and public safety and safe work practices:

☑ 1. Construction in road right-of-way shall be signed in accordance with the "Manual of Uniform Traffic Control Devices", 2012 Edition from State of California, Department of Transportation (Caltrans).
☑ 2. Hours of work and lane closure shall be in accordance with approved traffic control plans.
☑ 3. All construction work shall be performed in accordance with CAL O.S.H.A. Safety Orders, latest issue.

Expressway work by Permit:

☐ 1. The expressway pavement shall not be cut.
☑ 2. Allowed pavement cuts shall be sawcut, backfilled in accordance with Section 19.03 of the County Standard Specifications and paved with Type A Asphalt, ¾" coarse asphalt concrete, placed in lifts of 6", 6" and a 3" final lift (surface course) of ½" medium asphalt concrete.
☑ 3. Installation of pipes and conduits shall be by boring and jacking or direction bore methods.
☑ 4. If removal of existing fence or wall is required, it shall be replaced in kind.
☑ 5. No equipment or materials shall be stored in right-of-way overnight, unless prior written permission is obtained from the Roads and Airports Department.
☑ 6. Flagmen shall be required at any time equipment or men are crossing or working within the expressway area.
☑ 7. All landscaping removed or damaged shall be replaced in kind and approved by the County Project Inspector in the field.

Pavement damage caused by construction shall be repaired. Temporary or permanent lane realignment requiring removal of pavement stripes, markings/markers, or other construction activities causing pavement surface damage shall be repaired by use of Caltrans standard slurry seal Type 2. The placement of slurry seal, as part of the corrective repairs to a damaged roadway/lane realignment shall involve sealing the entire area. Pavement cracked/depressed by construction equipment or methods shall be removed and replaced in kind.

Notice

Indian Burial Sites: Upon discovering or unearthing any burial site as evidence by human skeletal remains or artifacts, the person making such discovery shall immediately notify the County Coroner at (408) 793-1900 and the Office of Human Relations at (408) 299-2206. No further disturbance of the site may be made except as authorized by the County Coordinator of Indian Affairs in accordance with the provisions of the state law and Chapter 2, Division B6 of the County Ordinance Code.

Underground Utilities: Notify U.S.A. Location Service at (800) 227-2600, 48 hours prior to any trenching or excavation in the road right-of-way.

Detours: For information regarding detours, contact Encroachment Permits at (408) 573 - 2475.

Material Submittals: Material Submittals are required, in accordance with the County's Standard Specifications Section 86.01.04 "Submittals", for work involving County maintained signals, lighting and electrical systems. Submittals shall be furnished to the County Roads and Airports Department's right-of-way Project Inspector. Materials furnished/installed without the Roads and Airports Department's prior approval may be subject to rejection/removal at the permittee's expense.

CONFORMED

Board of Supervisors: Mike Wasserman, Cindy Chavez, Dave Cortese, Ken Yeager, S. Joseph Simitian
County Executive: Jeffrey V. Smith

CONFORMED

EXHIBIT C

Road's Department Encroachment Permit Time Extension Fee Schedule - August 2006

Task	Current Fee	3 Months	6 Months	9 Months	12 Months
Minor Permits	N/A	25% of Original Permit Fee	50% of Original Permit Fee	75% of Original Permit Fee	100% of Original Permit Fee
Major Permits*	N/A	All previous cost must be paid before an extension can be issued	All previous cost must be paid before an extension can be issued	All previous cost must be paid before an extension can be issued	All previous cost must be paid before an extension can be issued

* The applicants would be charged actual issuance, plan check, and inspection cost incurred for these permits.

FOR BIDDING PURPOSES ONLY
27-16019

CONFORMED

CONFORMED

Appendix L

Public Entities Indemnification and INSURANCE- CONTRACTOR-Construction Risk

CONFORMED

APPENDIX L

Public Entities indemnification and

INSURANCE- CONTRACTOR-Construction Risk

Indemnity

To the extent not prohibited by applicable statute, the Contractor shall indemnify, defend and hold harmless the officers, agents, affiliates and employees of:

- Santa Clara Valley Water District (SCVWD), County of Santa Clara ,and
- Santa Clara County, including members of the Board of Supervisors of the County of Santa Clara,
- The City of Milpitas

individually and collectively, as additional insureds , (individually an "Indemnified Party" or collectively ("Indemnified Parties")) from and against any and all loss, damage, injury, liability, claim, demand, cost or expense (including, without limitation, attorney's, consultant's and expert's fees, and court costs), fine or penalty (collectively, "Loss") incurred by any person (including, without limitation, any Indemnified Party, Contractor, or any employee of Contractor or of any Indemnified Party) arising out of or in any manner connected with (i) any work performed by Contractor, or (ii) any act or omission of Contractor, its officers, agents or employees, or (iii) any breach of this Agreement by Contractor.

b. The right to indemnity under this contract shall accrue upon occurrence of the event giving rise to the Loss, and shall apply regardless of any negligence or strict liability of any Indemnified Party, except where the Loss is caused by the sole active negligence of an Indemnified Party as established by the final judgment of a court of competent jurisdiction. The sole active negligence of any Indemnified Party shall not bar the recovery of any other Indemnified Party.

c. Contractor expressly and specifically assumes potential liability for claims or actions brought by Contractor's own employees. Contractor waives any immunity it may have under worker's compensation or industrial insurance acts to indemnify the Indemnified Parties under this construction contract. Contractor acknowledges that this waiver was mutually negotiated by the parties hereto.

d. No court or jury findings in any employee's suit pursuant to any worker's compensation act or the Federal Employers' Liability Act against a party to this Agreement may be relied upon or used by Contractor in any attempt to assert liability against any Indemnified Party.

e. The provisions of the indemnity as described shall survive the completion of any work performed by Contractor or the termination or expiration of this Agreement. In no event shall these or any other provisions of this Agreement be deemed to limit any liability Contractor may have to any Indemnified Party by statute or under common law.

Insurance requirements

Please refer to the insurance requirements listed below.

Without limiting the Contractor's indemnification of, or liability to, the Indemnified Parties, the Contractor must provide and maintain at its own expense, during the term of this Agreement, or as may be further required herein, the following insurance coverages and provisions:

CONFORMED

APPENDIX L

Public Entities indemnification and

INSURANCE- CONTRACTOR-Construction Risk

Contractor must provide its insurance broker(s)/agent(s) with a copy of these requirements and warrants that these requirements have been reviewed by Contractor's insurance agent(s) and/or broker(s), who have been instructed by Contractor to procure the insurance coverage required herein.

In addition to certificates, Contractor must furnish the Contracting Officer with copies of original endorsements affecting coverage required by this Appendix. The certificates and endorsements are to be signed by a person authorized by that insurer to bind coverage on its behalf. **All endorsements and certificates are to be received and approved by the Contracting Officer before the contract commences**. In the event of a claim or dispute, the Indemnified Parties and the Contracting Officer have the right to require Contractor's insurer to provide complete, certified copies of all required pertinent insurance policies, including endorsements affecting the coverage required by this Appendix.

Contractor must, at its sole cost and expense, procure and maintain during the entire period of this Agreement the following insurance coverage(s).

Required Coverages

1. Commercial General/Business Liability Insurance with coverage as indicated:

$5,000,000 per occurrence / **$5,000,000** aggregate limits for bodily injury and property damage

$5,000,000 Products/Completed Operations aggregate (to be maintained for at least three (3) years following acceptance of the work by the Contracting Officer.

General Liability insurance must include:

a. Coverage at least as broad as found in standard ISO form CG 00 01.
b. Premises and Operations
c. Contractual Liability expressly including liability assumed under this contract.
d. Owners and Contractors' Protective liability
e. Severability of Interest
f. Explosion, Collapse and Underground Hazards, (X,C, and U)
g. Broad Form Property Damage liability
h. If the standard ISO Form wording for "OTHER INSURANCE," or other comparable wording, is not contained in Contractor's liability insurance policy, an endorsement must be provided that said insurance will be primary insurance and any insurance or self-insurance maintained by the Indemnified Parties will be in excess of Consultant's insurance and will not contribute to it.

2. Business Auto Liability Insurance with coverage as indicated:

$2,000,000 combined single limit for bodily injury and property damage per occurrence, covering all owned, non-owned and hired vehicles.

3. Builders' Risk (Course of Construction) Insurance

CONFORMED

APPENDIX L

Public Entities indemnification and

INSURANCE- CONTRACTOR-Construction Risk

Covering all risks of loss less policy exclusions for an amount equal to the completed value of the project with no coinsurance penalty provisions. Builder's Risk policy shall name the Indemnified Parties as loss payee's.

4. Workers' Compensation and Employer's Liability Insurance

Statutory California Workers' Compensation coverage covering all work to be performed for the contract.

Employer Liability coverage for not less than $1,000,000 per occurrence.

General Requirements

With respect to all coverages noted above, the following additional requirements apply:

1. **Additional Insured Endorsement(s)** Contractor must provide an additional insured endorsement for Commercial General/Business Liability and Business Automobile liability coverage naming, the Indemnified Parties, its Directors, officers, employees, and agents, individually and collectively, as additional insureds, and must provide coverage for acts, omissions, etc. arising out of the named insureds' activities and work. Other public entities may also be added to the additional insured endorsement as applicable and the Contractor will be notified of such requirement(s) by the Contracting Officer.

   (**NOTE:** Additional insured language on the Certificate of Insurance is **NOT** acceptable without a separate endorsement such as Form CG 20 10, CG 2033, CG 2037. Note: Editions dated 07/04 are not acceptable)

2. **Primacy Clause:** Contractor's insurance must be primary with respect to any other insurance which may be carried by the Indemnified Parties, and the Indemnified Parties' coverage must not be called upon to contribute or share in the loss.

3. **Cancellation Clause Revision:** The Certificate of Insurance **MUST** provide **30 days notice of cancellation, (10 days notice for non-payment of premium). NOTE: The standard wording in the ISO Certificate of Insurance is not acceptable.** The following words must be crossed out or deleted from the standard cancellation clause: "...endeavor to..." AND "...but failure to mail such notice must impose no obligation or liability of any kind upon the company, its agents or representatives."

4. **Acceptability of Insurers:** All coverages must be issued by companies admitted to conduct business in the State of California, which hold a current policy holder's alphabetic and financial size category rating of not less than A- V, according to the current Best's Key Rating Guide or a company of equal financial stability that is approved by the Contracting Officer.

5. **Self-Insured Retentions or Deductibles:** Any deductibles or self-insured retentions must be declared to and approved by the Contracting Officer. At the option of the Contracting Officer, either: the insurer shall reduce or eliminate such deductibles or self-insured retentions as respects to all insured public entities as named above, its officers, officials,

CONFORMED

employees and volunteers; or the Contractor shall provide a financial guarantee satisfactory to the Entity guaranteeing payment of losses and related investigations, claim administration, and defense expenses.

6. **Subcontractors:** Should any of the work under this Agreement be sublet, the Contractor must require each of its subcontractors of any tier to carry the aforementioned coverages, or Contractors may insure subcontractors under its own policies.

7. **Amount of Liability not Limited to Amount of Insurance:** The insurance procured by Contractor for the benefit of the Indemnified Parties must not be deemed to release or limit any liability of Contractor. Damages recoverable by the Indemnified Parties for any liability of Contractor must, in any event, not be limited by the amount of the required insurance coverage.

8. **Coverage to be Occurrence Based:** All coverage must be occurrence-based coverage. Claims-made coverage is not allowed.

9. **Waiver of Subrogation:** : Contractor agrees on to waive subrogation against any of the Indemnified Parties to the extent any loss suffered by Contractor is covered by any Commercial General Liability policy, Automobile policy, Workers' Compensation policy, or Builders' Risk policy described in Required Coverages above. Contractor agrees to advise its broker/agent/insurer about this provision and obtain any endorsements, if needed, necessary to ensure the insurer agrees.

10**.** **Non-compliance:** The Contracting Officer reserves the right to withhold payments to the Contractor in the event of material noncompliance with the insurance requirements outlined above.

11**.** **Please mail the certificates and endorsements to:**

US Army Corps Of Engineer
Contracting Division
ATTN: CECT-SPN
1455 MARKET ST., 17TH FL
San Francisco, California 94103-1398

IMPORTANT: **On the certificate of insurance, please note either the name of the project or the name of the District contact person or unit for the contract.**

If your insurance broker has any questions please advise him/her to call Mr. James Garror , Contract Specialist (415) 503-6988.

CONFORMED

TRANSMITTAL OF SHOP DRAWINGS, EQUIPMENT DATA, MATERIAL SAMPLES, OR MANUFACTURER'S CERTIFICATES OF COMPLIANCE

For use of this form, see ER 415-1-10; the proponent agency is CECW-CE.

DATE	TRANSMITTAL NO.

SECTION I - REQUEST FOR APPROVAL OF THE FOLLOWING ITEMS (*This section will be initiated by the contractor*)

TO:	FROM:	CONTRACT NO.	CHECK ONE: ☐ THIS IS A NEW TRANSMITTAL ☐ THIS IS A RESUBMITTAL OF TRANSMITTAL _____

SPECIFICATION SEC. NO. (*Cover only one section with each transmittal*)	PROJECT TITLE AND LOCATION	THIS TRANSMITTAL IS FOR: (*Check one*) ☐ FIO ☐ GA ☐ DA ☐ CR ☐ DA/CR ☐ DA/GA

ITEM NO. (*See Note 3*) a.	DESCRIPTION OF SUBMITTAL ITEM (*Type size, model number/etc.*) b.	SUBMITTAL TYPE CODE (*See Note 8*) c.	NO. OF COPIES d.	CONTRACT DOCUMENT REFERENCE: SPEC. PARA. NO. e.	CONTRACT DOCUMENT REFERENCE: DRAWING SHEET NO. f.	CONTRACTOR REVIEW CODE g.	VARIATION Enter "Y" if requesting a variation (*See Note 6*) h.	USACE ACTION CODE (*Note 9*) i.

REMARKS	I certify that the above submitted items had been reviewed in detail and are correct and in strict conformance with the contract drawings and specifications except as otherwise stated.	
	NAME OF CONTRACTOR	SIGNATURE OF CONTRACTOR

SECTION II - APPROVAL ACTION

ENCLOSURES RETURNED (*List by item No.*)	NAME AND TITLE OF APPROVING AUTHORITY	SIGNATURE OF APPROVING AUTHORITY	DATE

CONFORMED

INSTRUCTIONS

1. Section I will be initiated by the Contractor in the required number of copies.

2. Each Transmittal shall be numbered consecutively. The Transmittal Number typically includes two parts separated by a dash (-). The first part is the specification section number. The second part is a sequential number for the submittals under that spec section. If the Transmittal is a resubmittal, then add a decimal point to the end of the original Transmittal Number and begin numbering the resubmittal packages sequentially after the decimal.

3. The "Item No." for each entry on this form will be the same "Item No." as indicated on ENG FORM 4288-R.

4. Submittals requiring expeditious handling will be submitted on a separate ENG Form 4025-R.

5. Items transmitted on each transmittal form will be from the same specification section. Do not combine submittal information from different specification sections in a single transmittal.

6. If the data submitted are intentionally in variance with the contract requirements, indicate a variation in column h, and enter a statement in the Remarks block describing he detailed reason for the variation.

7. ENG Form 4025-R is self-transmitting - a letter of transmittal is not required.

8. When submittal items are transmitted, indicate the "Submittal Type" (*SD-01 through SD-11*) in column c of Section I.
   Submittal types are the following:
   SD-01 - Preconstruction SD-02 - Shop Drawings SD-03 - Product Data SD-04 - Samples SD-05 - Design Data SD-06 - Test Reports
   SD-07 - Certificates SD-08 - Manufacturer's Instructions SD-09 - Manufacturer's Field Reports SD-10 - O&M Data SD-11 - Closeout

9. For each submittal item, the Contractor will assign Submittal Action Codes in column g of Section I. The U.S. Army Corps of Engineers approving authority will assign Submittal Action Codes in column i of Section I. The Submittal Action Codes are:

   A -- Approved as submitted.
   B -- Approved, except as noted on drawings. Resubmission not required.
   C -- Approved, except as noted on drawings. Refer to attached comments. Resubmission required.
   D -- Will be returned by separate correspondence.
   E -- Disapproved. Refer to attached comments.
   F -- Receipt acknowledged.
   X -- Receipt acknowledged, does not comply with contract requirements, as noted.
   G -- Other action required *(Specify)*
   K -- Government concurs with intermediate design. (*For D-B contracts*)
   R -- Design submittal is acceptable for release for construction. (*For D-B contracts*)

10. Approval of items does not relieve the contractor from complying with all the requirements of the contract.

CONFORMED

SUBMITTAL REGISTER

CONTRACT NO.

TITLE AND LOCATION
Upper Berryessa Creek

CONTRACTOR

ACTIVITY NO	TRANSMITTAL NO	SPEC SECT	DESCRIPTION ITEM SUBMITTED	PARAGRAPH #	CLASSIFICATION	GOVT OR A/E REVWR	CONTRACTOR: SCHEDULE DATES			CONTRACTOR ACTION			APPROVING AUTHORITY				MAILED TO CONTR/ DATE RCD FRM APPR AUTH
							SUBMIT	APPROVAL NEEDED BY	MATERIAL NEEDED BY	ACTION CODE	DATE OF ACTION	DATE FWD TO APPR AUTH/ DATE RCD FROM CONTR	DATE FWD TO OTHER REVIEWER	DATE RCD FROM OTH REVIEWER	ACTION CODE	DATE OF ACTION	
(a)	(b)	(c)	(d)	(e)	(f)		(g)	(h)	(i)	(j)	(k)	(l)	(m)	(n)	(o)	(p)	(q)
		01 14 00	SD-01 Preconstruction Submittals														
			List of Contact Personnel	1.2.1.1	G												
		01 16 00	SD-01 Preconstruction Submittals														
			Work Notification;	1.11.3	G												
		01 32 01.00 10	SD-01 Preconstruction Submittals														
			Project Scheduler Qualifications	1.3	G												
			Preliminary Project Schedule	3.4.1	G												
			Initial Project Schedule	3.4.2	G												
			Periodic Schedule Update	3.6.2	G												
		01 33 00	SD-01 Preconstruction Submittals														
			Submittal Register	1.7	G												
		01 35 26	SD-01 Preconstruction Submittals														
			Accident Prevention Plan (APP)	1.6	G												
			Activity Hazard Analysis (AHA)	1.7	G												
			SD-06 Test Reports														
			Notifications and Reports	1.11													
			Accident Reports	1.11.2	G												
			SD-07 Certificates														
			Confined Space Entry Permit	1.8													
			Hot work permit	1.8													
		01 45 00.00 10	SD-01 Preconstruction Submittals														
			Contractor Quality Control (CQC)	3.2	G												
			Plan														
		01 50 00	SD-01 Preconstruction Submittals														

CONTROLLED

SUBMITTAL REGISTER

CONTRACT NO.

TITLE AND LOCATION
Upper Berryessa Creek

CONTRACTOR

ACTIVITY NO	TRANSMITTAL NO	SPEC SECT	DESCRIPTION ITEM SUBMITTED	PARAGRAPH #	CLASSIFICATION	GOVT OR A/E REVWR	CONTRACTOR: SCHEDULE DATES			CONTRACTOR ACTION			APPROVING AUTHORITY				MAILED TO CONTR/ DATE RCD FRM APPR AUTH
							SUBMIT	APPROVAL NEEDED BY	MATERIAL NEEDED BY	ACTION CODE	DATE OF ACTION	DATE FWD TO APPR AUTH/ DATE RCD FROM CONTR	DATE FWD TO OTHER REVIEWER	DATE RCD FROM OTH REVIEWER	ACTION CODE	DATE OF ACTION	
(a)	(b)	(c)	(d)	(e)	(f)		(g)	(h)	(i)	(j)	(k)	(l)	(m)	(n)	(o)	(p)	(q)
		01 57 19	SD-01 Preconstruction Submittals														
			Preconstruction Survey	1.5.1	G												
			Solid Waste Management Permit	1.9	G												
			Regulatory Notifications	1.5.2	G												
			Environmental Protection Plan	1.6	G												
			Stormwater Notice of Intent	3.2.1.2	G												
			Dirt and Dust Control Plan	1.6.9.1	G												
			Employee Training Records	1.5.4	G												
			SD-06 Test Reports														
			Laboratory Analysis	1.6.6													
			Inspection Reports	3.2.1.3													
			Solid Waste Management Report	3.7.2.1	G												
			SD-07 Certificates														
			Employee Training Records	1.5.4	G												
			Erosion and Sediment Control	1.5.4													
			Inspector Qualifications														
			SD-11 Closeout Submittals														
			Stormwater Pollution Prevention	3.2.1.4	G												
			Plan Compliance Notebook														
			Stormwater Notice of Termination	3.2.1.5	G												
			Environmental Records Binder	1.8	G												
			Waste Determination	3.7.1	G												
			Documentation														
			Disposal Documentation for	3.7.3.6	G												

SUPERVISOR

SUBMITTAL REGISTER

CONTRACT NO.

TITLE AND LOCATION
Upper Berryessa Creek

CONTRACTOR

ACTIVITY NO	TRANSMITTAL NO	SPEC SECT	DESCRIPTION ITEM SUBMITTED	PARAGRAPH #	CLASSIFICATION	GOVT OR A/E REVWR	CONTRACTOR: SCHEDULE DATES			CONTRACTOR ACTION			APPROVING AUTHORITY				MAILED TO CONTR/ DATE RCD FRM APPR AUTH
							SUBMIT	APPROVAL NEEDED BY	MATERIAL NEEDED BY	ACTION CODE	DATE OF ACTION	DATE FWD TO APPR AUTH/ DATE RCD FROM CONTR	DATE FWD TO OTHER REVIEWER	DATE RCD FROM OTH REVIEWER	ACTION CODE	DATE OF ACTION	
(a)	(b)	(c)	(d)	(e)	(f)		(g)	(h)	(i)	(j)	(k)	(l)	(m)	(n)	(o)	(p)	(q)
		01 57 19	Assembled Employee Training Records	1.5.4	G												
			Solid Waste Management Permit	1.9	G												
			Solid Waste Management Report	3.7.2.1	G												
			Hazardous Waste/Debris Management	3.7.3.1	G												
			Regulatory Notifications	1.5.2	G												
			Sales Documentation	3.7.2.1	G												
			Contractor Certification	3.7.2.1													
		01 57 20.00 10	SD-01 Preconstruction Submittals														
			Environmental Protection Plan	1.9	G												
			Nesting Bird Surveys	3.10.1	G												
			Transportation Management Plan	3.6	G												
			Rain Event Action Plan	1.8	G												
			SD-06 Test Reports														
			Trees Monitoring Report	3.3.4	G												
		01 57 23	SD-01 Preconstruction Submittals														
			Storm Water Pollution Prevention Plan	1.3.2													
			Storm Water Notice of Intent	1.3.2													
			SD-06 Test Reports														
			Storm Water Inspection Reports for General Permit	1.3.2													
			Erosion and Sediment Controls	1.3													

CONTROLLED

SUBMITTAL REGISTER

CONTRACT NO.

TITLE AND LOCATION
Upper Berryessa Creek

CONTRACTOR

ACTIVITY NO	TRANSMITTAL NO	SPEC SECT	DESCRIPTION ITEM SUBMITTED	PARAGRAPH #	CLASSIFICATION	GOVT OR A/E REVWR	CONTRACTOR: SCHEDULE DATES			CONTRACTOR ACTION			APPROVING AUTHORITY				MAILED TO CONTR/ DATE RCD FRM APPR AUTH
							SUBMIT	APPROVAL NEEDED BY	MATERIAL NEEDED BY	ACTION CODE	DATE OF ACTION	DATE FWD TO APPR AUTH/ DATE RCD FROM CONTR	DATE FWD TO OTHER REVIEWER	DATE RCD FROM OTH REVIEWER	ACTION CODE	DATE OF ACTION	
(a)	(b)	(c)	(d)	(e)	(f)		(g)	(h)	(i)	(j)	(k)	(l)	(m)	(n)	(o)	(p)	(q)
		01 58 00	SD-02 Shop Drawings														
			Sign Legend Orders	1.3.1	G												
		01 78 00	SD-01 Preconstruction Submittals														
			Warranty Management Plan	1.3.1	G												
			SD-11 Closeout Submittals														
			Record Drawings	1.2.1	G												
			Operation and Maintenance	1.4	G												
			Manuals														
		02 22 13	SD-01 Preconstruction Submittals														
			Vibration Control Specialist	1.2.1	G												
			Vibration Control Specialist	1.2.1	G												
			Alternate														
			Vibration Monitoring Technician	1.2.2	G												
			Structural Inspection/Evaluation	1.2.3	G												
			Engineer														
			Vibration Control Plan	3.3	G												
			SD-06 Test Reports														
			Vibration Monitoring Report	3.5	G												
			Daily Instrument Logs	3.4	G												
			Post-Construction Structural	3.6	G												
			Survey														
		02 41 00	SD-01 Preconstruction Submittals														
			Demolition Plan	1.2.2	G												
			Existing Conditions	1.9													

CONTRACTOR

SUBMITTAL REGISTER

CONTRACT NO.

TITLE AND LOCATION
Upper Berryessa Creek

CONTRACTOR

ACTIVITY NO	TRANSMITTAL NO	SPEC SECT	DESCRIPTION ITEM SUBMITTED	PARAGRAPH #	CLASSIFICATION	GOVT OR A/E REVWR	CONTRACTOR: SCHEDULE DATES			CONTRACTOR ACTION			APPROVING AUTHORITY				MAILED TO CONTR/ DATE RCD FRM APPR AUTH
							SUBMIT	APPROVAL NEEDED BY	MATERIAL NEEDED BY	ACTION CODE	DATE OF ACTION	DATE FWD TO APPR AUTH/ DATE RCD FROM CONTR	DATE FWD TO OTHER REVIEWER	DATE RCD FROM OTH REVIEWER	ACTION CODE	DATE OF ACTION	
(a)	(b)	(c)	(d)	(e)	(f)		(g)	(h)	(i)	(j)	(k)	(l)	(m)	(n)	(o)	(p)	(q)
		03 11 13.00 10	SD-02 Shop Drawings														
			Formwork	2.2.1	G												
			Formwork	3.1.1	G												
			Form Removal Schedule	2.2.1	G												
			SD-03 Product Data														
			Form Materials	2.2													
			SD-04 Samples														
			Sample Panels	1.3	G												
			Fiber Voids	2.2.2	G												
			SD-05 Design Data														
			Calculations	2.1													
			SD-06 Test Reports														
			Inspection	3.2													
			SD-07 Certificates														
			Fiber Voids	2.2.2													
		03 15 00.00 10	SD-02 Shop Drawings														
			Waterstops	2.4	G												
			SD-03 Product Data														
			Preformed Expansion Joint Filler	2.2													
			Sealant	2.3													
			Waterstops	2.4													
			SD-04 Samples														
			Lubricant for Preformed	2.3.2													
			Compression Seals														

CONTROLLED

SUBMITTAL REGISTER

CONTRACT NO.

TITLE AND LOCATION
Upper Berryessa Creek

CONTRACTOR

ACTIVITY NO	TRANSMITTAL NO	SPEC SECT	DESCRIPTION ITEM SUBMITTED	PARAGRAPH #	CLASSIFICATION	GOVT OR A/E REVWR	CONTRACTOR: SCHEDULE DATES			CONTRACTOR ACTION			APPROVING AUTHORITY				MAILED TO CONTR/ DATE RCD FRM APPR AUTH
							SUBMIT	APPROVAL NEEDED BY	MATERIAL NEEDED BY	ACTION CODE	DATE OF ACTION	DATE FWD TO APPR AUTH/ DATE RCD FROM CONTR	DATE FWD TO OTHER REVIEWER	DATE RCD FROM OTH REVIEWER	ACTION CODE	DATE OF ACTION	
(a)	(b)	(c)	(d)	(e)	(f)		(g)	(h)	(i)	(j)	(k)	(l)	(m)	(n)	(o)	(p)	(q)
		03 15 00.00 10	Splicing Waterstops	2.5.2	G												
			SD-07 Certificates														
			Preformed Expansion Joint Filler	2.2													
			Sealant	2.3													
			Waterstops	2.4													
		03 20 00.00 10	SD-01 Preconstruction Submittals														
			Butt-Splices	3.1.3.2	G												
			SD-02 Shop Drawings														
			Reinforcement	3.1	G												
			SD-03 Product Data														
			Mechanical Butt-Splices	2.3.3	G												
			Reinforcing Steel	2.3	G												
			SD-04 Samples														
			Epoxy-Coated Bars	2.3.2													
			SD-06 Test Reports														
			Tests, Inspections, and	2.8	G												
			Verifications														
			SD-07 Certificates														
			Reinforcing Steel	2.3													
			Qualified Welders	1.3.1													
			Qualification of Steel Bar	1.3.2													
			Butt-Splicers														
		03 31 01.00 10	SD-02 Shop Drawings														
			Reinforcing steel	2.1.5	G												

SUBMITTAL REGISTER

CONTRACT NO.

TITLE AND LOCATION
Upper Berryessa Creek

CONTRACTOR

ACTIVITY NO	TRANSMITTAL NO	SPEC SECT	DESCRIPTION ITEM SUBMITTED	PARAGRAPH #	CLASSIFICATION	GOVT OR A/E REVWR	CONTRACTOR: SCHEDULE DATES			CONTRACTOR ACTION			APPROVING AUTHORITY				MAILED TO CONTR/ DATE RCD FRM APPR AUTH
							SUBMIT	APPROVAL NEEDED BY	MATERIAL NEEDED BY	ACTION CODE	DATE OF ACTION	DATE FWD TO APPR AUTH/ DATE RCD FROM CONTR	DATE FWD TO OTHER REVIEWER	DATE RCD FROM OTH REVIEWER	ACTION CODE	DATE OF ACTION	
(a)	(b)	(c)	(d)	(e)	(f)		(g)	(h)	(i)	(j)	(k)	(l)	(m)	(n)	(o)	(p)	(q)
		03 31 01.00 10	Construction Joint Treatment	3.1.4	G												
			Cold-Weather Requirements	3.2.1	G												
			Hot-Weather Requirements	3.2.2	G												
			Cementitious Materials,	1.4.2	G												
			Admixtures, and Curing														
			Compound														
			Nonshrink Grout	2.1.6													
			Mechanical Reinforcing Bar	2.1.5													
			Connectors														
			SD-06 Test Reports														
			Aggregates	2.1.2	G												
			Mill Test Reports	2.1													
			Tests and Inspections	3.3													
			Water	2.1.4													
			SD-07 Certificates														
			Concrete Field Testing	1.4													
			Technicians														
			Concrete Construction Inspector	1.4													
			(CCI)														
			Cementitious Materials	2.1.1													
			Blended Hydraulic Cement	2.1.1.6													
			SD-08 Manufacturer's Instructions														
			Curing Compound	1.4.2													
		03 35 00.00 10	SD-03 Product Data														

CONTROLLED

SUBMITTAL REGISTER

CONTRACT NO.

TITLE AND LOCATION
Upper Berryessa Creek

CONTRACTOR

ACTIVITY NO	TRANSMITTAL NO	SPEC SECT	DESCRIPTION ITEM SUBMITTED	PARAGRAPH #	CLASSIFICATION	GOVT OR A/E REVWR	CONTRACTOR: SCHEDULE DATES			CONTRACTOR ACTION			APPROVING AUTHORITY				MAILED TO CONTR/ DATE RCD FRM APPR AUTH
							SUBMIT	APPROVAL NEEDED BY	MATERIAL NEEDED BY	ACTION CODE	DATE OF ACTION	DATE FWD TO APPR AUTH/ DATE RCD FROM CONTR	DATE FWD TO OTHER REVIEWER	DATE RCD FROM OTH REVIEWER	ACTION CODE	DATE OF ACTION	
(a)	(b)	(c)	(d)	(e)	(f)		(g)	(h)	(i)	(j)	(k)	(l)	(m)	(n)	(o)	(p)	(q)
		03 39 00.00 10	SD-03 Product Data														
			Curing Materials	2.1													
			SD-06 Test Reports														
			Testing and Inspection for CQC	3.2													
			SD-08 Manufacturer's Instructions														
			Curing Compound	2.1													
		03 40 00.00 10	SD-01 Preconstruction Submittals														
			Quality Control Procedures	1.3.2.2													
			SD-02 Shop Drawings														
			Standard Precast Units	2.1.1	G												
			Custom-Made Precast Units	2.1.2	G												
			SD-03 Product Data														
			Standard Precast Units	2.1.1													
			Proprietary Precast Units	2.1.3													
			Embedded Items	3.1.3													
			Accessories	2.2.11													
			SD-05 Design Data														
			Design Calculations	2.1.2													
			Concrete Mix Proportions	2.1.5.1													
			SD-06 Test Reports														
			Test Reports	1.3.2.4													
			SD-07 Certificates														
			Quality Control Procedures	1.3.2.2													
		31 00 00	SD-01 Preconstruction Submittals														

CONTROLLED

SUBMITTAL REGISTER

CONTRACT NO.

TITLE AND LOCATION
Upper Berryessa Creek

CONTRACTOR

ACTIVITY NO	TRANSMITTAL NO	SPEC SECT	DESCRIPTION ITEM SUBMITTED	PARAGRAPH #	CLASSIFICATION	GOVT OR A/E REVWR	CONTRACTOR: SCHEDULE DATES			CONTRACTOR ACTION			APPROVING AUTHORITY				MAILED TO CONTR/	
							SUBMIT	APPROVAL NEEDED BY	MATERIAL NEEDED BY	ACTION CODE	DATE OF ACTION	DATE FWD TO APPR AUTH/ DATE RCD FROM CONTR	DATE FWD TO OTHER REVIEWER	DATE RCD FROM OTH REVIEWER	ACTION CODE	DATE OF ACTION	DATE RCD FRM APPR AUTH	
(a)	(b)	(c)	(d)	(e)	(f)		(g)	(h)	(i)	(j)	(k)	(l)	(m)	(n)	(o)	(p)	(q)	
		31 00 00	Dewatering Plan	1.5.2	G													
			Dewatering Plan	1.5.2	G													
			Groundwater Management Plan	1.5.3	G													
			SD-03 Product Data															
			Utilization of Excavated Materials	3.8	G													
			SD-06 Test Reports															
			Soil Testing Logs	3.14	G													
			Borrow Site Testing	2.1	G													
			Select Granular Material	1.4.6	G													
			SD-07 Certificates															
			Testing Laboratory	3.14	G													
		31 05 19	SD-03 Product Data															
			Thread	2.1.2														
			Manufacturing Quality Control	2.2														
			Sampling and Testing															
			SD-04 Samples															
			Quality Assurance Samples and	3.1														
			Tests															
			SD-07 Certificates															
			Geotextile	2.1.1														
		31 11 00	SD-03 Product Data															
			Nonsaleable Materials	3.6.2	G													
			SD-04 Samples															
			Tree wound paint	2.1														

CONTROLLED

SUBMITTAL REGISTER

CONTRACT NO.

TITLE AND LOCATION
Upper Berryessa Creek

CONTRACTOR

ACTIVITY NO	TRANSMITTAL NO	SPEC SECT	DESCRIPTION ITEM SUBMITTED	PARAGRAPH #	CLASSIFICATION	GOVT OR A/E REVWR	CONTRACTOR: SCHEDULE DATES			CONTRACTOR ACTION			APPROVING AUTHORITY				MAILED TO CONTR/ DATE RCD FRM APPR AUTH
							SUBMIT	APPROVAL NEEDED BY	MATERIAL NEEDED BY	ACTION CODE	DATE OF ACTION	DATE FWD TO APPR AUTH/ DATE RCD FROM CONTR	DATE FWD TO OTHER REVIEWER	DATE RCD FROM OTH REVIEWER	ACTION CODE	DATE OF ACTION	
(a)	(b)	(c)	(d)	(e)	(f)		(g)	(h)	(i)	(j)	(k)	(l)	(m)	(n)	(o)	(p)	(q)
		31 32 11	Layout	3.2.2	G												
			Obstructions Below Ground	3.2.4	G												
			Maintenance Record	3.6													
			SD-03 Product Data														
			Erosion Control Blankets Type XII	2.1.1													
			Equipment	1.1													
			Finished Grade	3.1.1													
			SD-04 Samples														
			Erosion control blankets	2.1													
			SD-06 Test Reports														
			Erosion Control Blankets	2.1													
			SD-07 Certificates														
			Installer's Qualification	1.4.1													
			SD-10 Operation and Maintenance Data														
			Maintenance Instructions	3.6.2													
			SD-11 Closeout Submittals														
			Erosion Control Blankets Type XII	2.1.1													
		32 11 23	SD-03 Product Data														
			Plant, Equipment, and Tools	2.1													
			Waybills and Delivery Tickets	1.4.5													
			SD-06 Test Reports														

CONTROLLED

SUBMITTAL REGISTER

CONTRACT NO.

TITLE AND LOCATION
Upper Berryessa Creek

CONTRACTOR

ACTIVITY NO	TRANSMITTAL NO	SPEC SECT	DESCRIPTION ITEM SUBMITTED	PARAGRAPH #	CLASSIFICATION	GOVT OR A/E REVWR	CONTRACTOR: SCHEDULE DATES			CONTRACTOR ACTION			APPROVING AUTHORITY				MAILED TO CONTR/ DATE RCD FRM APPR AUTH
							SUBMIT	APPROVAL NEEDED BY	MATERIAL NEEDED BY	ACTION CODE	DATE OF ACTION	DATE FWD TO APPR AUTH/ DATE RCD FROM CONTR	DATE FWD TO OTHER REVIEWER	DATE RCD FROM OTH REVIEWER	ACTION CODE	DATE OF ACTION	
(a)	(b)	(c)	(d)	(e)	(f)		(g)	(h)	(i)	(j)	(k)	(l)	(m)	(n)	(o)	(p)	(q)
		32 31 13	SD-02 Shop Drawings														
			Fence Assembly	1.3	G												
			Location of Gate, Corner, End,	3.16.1	G												
			and Pull Posts														
			Gate Assembly	1.3	G												
			Gate Hardware and Accessories	2.17	G												
			Erection/Installation Drawings	1.3													
			SD-03 Product Data														
			Fence Assembly	1.3	G												
			Gate Assembly	1.3	G												
			Gate Hardware and Accessories	2.17													
			PVC Coating	1.5.1	G												
			Zinc Coating	2.2	G												
			Concrete	2.20	G												
			SD-04 Samples														
			Fabric	2.3	G												
			Braces	2.19													
			Line Posts	2.5													
			Sleeves	2.7													
			Top Rail	2.8													
			Tension Wire	2.11													
			Stretcher Bars	2.12													
			Gate Posts	2.15													
			Gate Hardware and Accessories	2.17													

CONTROLLED

SUBMITTAL REGISTER

CONTRACT NO.

TITLE AND LOCATION
Upper Berryessa Creek

CONTRACTOR

ACTIVITY NO	TRANSMITTAL NO	SPEC SECT	DESCRIPTION ITEM SUBMITTED	PARAGRAPH #	CLASSIFICATION	GOVT OR A/E REVWR	CONTRACTOR: SCHEDULE DATES			CONTRACTOR ACTION			APPROVING AUTHORITY				MAILED TO CONTR/ DATE RCD FRM APPR AUTH
							SUBMIT	APPROVAL NEEDED BY	MATERIAL NEEDED BY	ACTION CODE	DATE OF ACTION	DATE FWD TO APPR AUTH/ DATE RCD FROM CONTR	DATE FWD TO OTHER REVIEWER	DATE RCD FROM OTH REVIEWER	ACTION CODE	DATE OF ACTION	
(a)	(b)	(c)	(d)	(e)	(f)		(g)	(h)	(i)	(j)	(k)	(l)	(m)	(n)	(o)	(p)	(q)
		32 31 13	SD-07 Certificates														
			Certificates of Compliance	1.5.2													
			SD-08 Manufacturer's Instructions														
			Fence Assembly	1.3													
			Gate Assembly	1.3													
			Hardware Assembly	1.3													
			Accessories	1.3													
		32 92 19	SD-03 Product Data														
			Wood cellulose fiber mulch	2.3.3													
			Fertilizer	2.2													
			SD-07 Certificates														
			seed	2.1													
			SD-08 Manufacturer's Instructions														
			Erosion Control Materials	2.5													
		33 40 00	SD-03 Product Data														
			Placing Pipe	3.3													
			Flpa Gate Check Valves		G												
			SD-04 Samples														
			Pipe for Culverts and Storm	2.1													
			Drains														
			SD-07 Certificates														
			Resin Certification	2.1.2													
			Determination of Density	3.7.5													
			Frame and Cover for Gratings	2.3.4													

SUBMITTAL REGISTER

CONTRACT NO.

TITLE AND LOCATION
Upper Berryessa Creek

CONTRACTOR

ACTIVITY NO	TRANSMITTAL NO	SPEC SECT	DESCRIPTION ITEM SUBMITTED	PARAGRAPH #	CLASSIFICATION	GOVT OR A/E REVWR	CONTRACTOR: SCHEDULE DATES			CONTRACTOR ACTION			APPROVING AUTHORITY				MAILED TO CONTR/ DATE RCD FRM APPR AUTH
							SUBMIT	APPROVAL NEEDED BY	MATERIAL NEEDED BY	ACTION CODE	DATE OF ACTION	DATE FWD TO APPR AUTH/ DATE RCD FROM CONTR	DATE FWD TO OTHER REVIEWER	DATE RCD FROM OTH REVIEWER	ACTION CODE	DATE OF ACTION	
(a)	(b)	(c)	(d)	(e)	(f)		(g)	(h)	(i)	(j)	(k)	(l)	(m)	(n)	(o)	(p)	(q)
		33 46 16	Pipe for Subdrains	2.1													
			SD-07 Certificates														
			Filter Fabric	2.2													
			Pipe for Subdrains	2.1													
		34 11 00	SD-03 Product Data														
			Wood Ties	2.8													
			Relay Rail	2.6.1.1	G												
			Joint Bars	2.3													
			Compromise Joint Bars	2.3.2													
			Miscellaneous Track Materials	2.10													
			Crossing Material or Surface	2.9.1													
			Acceptable Replacement	1.5.1	G												
			Materials														
			Traffic Maintenance and Detour	1.6.2	G												
			Plans														
			Thermite Welding Procedures	3.8	G												
			Electric Arc Welding	3.11.3													
			Materials and Samples	1.5.1													
			SD-04 Samples														
			Ballast	2.1													
			Subballast	2.2													
			SD-06 Test Reports														
			Sampling and Testing	3.10													
			Wood Ties	2.8													

CONTROLLED

SUBMITTAL REGISTER

CONTRACT NO.

TITLE AND LOCATION
Upper Berryessa Creek

CONTRACTOR

ACTIVITY NO	TRANSMITTAL NO	SPEC SECT	DESCRIPTION ITEM SUBMITTED	PARAGRAPH #	CLASSIFICATION	GOVT OR A/E REVWR	CONTRACTOR: SCHEDULE DATES			CONTRACTOR ACTION			APPROVING AUTHORITY				MAILED TO CONTR/ DATE RCD FRM APPR AUTH
							SUBMIT	APPROVAL NEEDED BY	MATERIAL NEEDED BY	ACTION CODE	DATE OF ACTION	DATE FWD TO APPR AUTH/ DATE RCD FROM CONTR	DATE FWD TO OTHER REVIEWER	DATE RCD FROM OTH REVIEWER	ACTION CODE	DATE OF ACTION	
(a)	(b)	(c)	(d)	(e)	(f)		(g)	(h)	(i)	(j)	(k)	(l)	(m)	(n)	(o)	(p)	(q)
		34 11 00	Wood Ties	2.8													
			Ballast	2.1													
			Subballast	2.2													
			Materials and Samples	1.5.1													
			SD-10 Operation and Maintenance														
			Data														
			Rail	2.6	G												
			Switches		G												
			Grade Crossings	2.9	G												
			SD-11 Closeout Submittals														
			As-Built Drawings	3.5.10	G												
		35 31 19	SD-03 Product Data														
			Riprap	3.3.3	G												
			Bedding Stone	2.2.1	G												
			Bulk Specific Gravity Test	1.3.3.1	G												
			Ready-Mixed Concrete Grout	3.4.1.1	G												
			Batching and Mixing Equipment	2.3.6	G												
			Admixtures	2.3.3	G												
			Curing Materials	2.3.4	G												
			Conveying and Placing	3.4.1.3	G												
			SD-06 Test Reports														
			Gradation Test	1.3.3	G	ED											
			Gradation Test	1.3.3.1	G	ED											
			Stone Quality Acceptance Test	1.3.3.1	G												

SUBMITTAL REGISTER

CONTRACT NO.

TITLE AND LOCATION
Upper Berryessa Creek

CONTRACTOR

ACTIVITY NO	TRANSMITTAL NO	SPEC SECT	DESCRIPTION ITEM SUBMITTED	PARAGRAPH #	CLASSIFICATION	GOVT OR A/E REVWR	CONTRACTOR: SCHEDULE DATES			CONTRACTOR ACTION			APPROVING AUTHORITY				MAILED TO CONTR/ DATE RCD FRM APPR AUTH
							SUBMIT	APPROVAL NEEDED BY	MATERIAL NEEDED BY	ACTION CODE	DATE OF ACTION	DATE FWD TO APPR AUTH/ DATE RCD FROM CONTR	DATE FWD TO OTHER REVIEWER	DATE RCD FROM OTH REVIEWER	ACTION CODE	DATE OF ACTION	
(a)	(b)	(c)	(d)	(e)	(f)		(g)	(h)	(i)	(j)	(k)	(l)	(m)	(n)	(o)	(p)	(q)
		35 31 19	SD-07 Certificates														
			Stone and Bedding Stone	3.1													
			Laboratory	1.3.2.2	G ED-G												
			Laboratory	3.3.4.2	G ED-G												
			Weigh Scale Certification	3.3.5													
			Certified Weight Scale Tickets	3.3.5													

CONTROLLED

Final Archaeological Monitoring Plan for CA-SCL-593

Berryessa Creek Channel Improvements
Milpitas, California

May 25, 2016

Introduction

The Memorandum of Agreement (MOA) between the U.S. Army Corps of Engineers, San Francisco District (USACE) and the State Historic Preservation Officer (SHPO) stated that a Historic Property Treatment Plan (HPTP) was required and it shall identify procedures in the event that significant cultural material (e.g., deposit with formed artifacts, rock fire pits, dietary shell lenses) or additional Native American burials are encountered during construction. The language in the MOA and HPTP regarding monitoring during construction has been coalesced into this Archaeological Monitoring Plan (AMP), which specifies how the contractor will operate construction equipment when excavating through the archaeological site area of SCL-593. The USACE is the lead agency responsible for ensuring that the stipulations of the HPTP are understood by the contractor, followed and the results recorded.

The treatment of Native American burials and associated artifacts during the most recent archaeological work completed by Basin Research Associates was governed by a Burial Treatment Plan (BTP) and the recommended protocols presented by the Most Likely Descendent (MLD). The procedures outlined in the BTP and the MLD recommendations are repeated in this AMP and will remain as guiding documents to properly treat and remove any additional human remains exposed during construction. All documentation will be provided to the project contractor.

The Archaeological Site

Archaeological site CA-SCL-593 has incurred severe damage from the realignment of Berryessa Creek and the Union Pacific Rail Road tracks, and yet there are remnants of cultural deposits that yielded information important to prehistory, and also human burials that have survived and become exposed in the open channel. Agency-sponsored archaeological excavations sampled the deposits to obtain information in accordance with the HPTP to resolve the adverse effects from the proposed project. The boundaries of SCl-593 are based on the Phase 1 archaeological investigations prepared by Basin Research Associates in October 2015. The Phase I results showed that the site burial data, cultural constituents, and radiocarbon dates provided information to answer some of the research questions in the HPTP. The archaeological studies demonstrated a consistent low-density of shell and stone and very few features, therefore it is reasonable to expect that the archaeological deposits to be damaged by channel work will continue to produce the same type of information. No further controlled archaeological investigations are therefore warranted. It is nonetheless prudent to monitor the channel excavations to verify the findings and also to recover archaeological materials of research value that may not have been revealed earlier.

CONFORMED

General Requirements

The construction project will require the services of a professional and experienced archaeologist that meets the Secretary of the Interior's Standards for archaeology to implement this AMP during project construction. The archaeologist will be the principle monitor, who shall be present on-site when any construction activities will occur within and adjacent to the mapped boundaries of the archaeological site SCL-593. During project mobilization and prior to commencing construction, the archaeologist shall meet with the construction crew to clarify the monitoring protocol and to review the potential range of archaeological work that will be needed for various finds.

The archaeologist shall provide training to construction personnel covering both identification of archaeological resources expected within the SCL-593 boundaries. This preconstruction training session will be held before the beginning of construction. All training sessions will be conducted in person and in English. Construction personnel will be briefed on the purpose for archaeological monitoring and the basic identification of archaeological resources, and the proper discovery protocols to be followed in the event of an archaeological discovery during construction.

The archaeologist will be responsible for making in-field evaluations of archaeological features, and in consultation with the USACE reach agreement on the disposition of the finds and estimated time to complete removal based upon pre-arranged templates. The emphasis is to recover new information that contributes to the site's archaeological value if it is unearthed. The recovery of encountered archaeological features may require studies and/or testing of samples or artifacts by outside experts or consultants.

The recordation and removal of features by the archaeologist will require additional archaeologists to assist, which will ensure that an archaeologist is available when construction resumes under the monitoring plan. Specific procedures are described below to adequately recover information before removal of recorded features, to set reasonable timeframes for the work and to suggest how the contractor's operations will accommodate these situations. In addition, the discovery of Native American burials during equipment operations will be governed by the BTP and recommendations of the MLD, and the removal of such will be managed by the archaeologist with assistance from others.

Native American Consultation

A Native American consultant listed with the Native American Heritage Commission shall support the archaeological monitoring program. The Native American shall be on-site at the commencement of construction work at SCL-593 to consult with the principal archaeologist, attend training/meetings for construction crews, and observe the initial monitoring operations.

Archeological Discovery Protocols and Impacts to Construction Schedule

CONFORMED

The contractor's channel excavations and associated earth-disturbing activities within the boundaries of archaeological site SCL-593 shall be performed only when the archaeologist is present to monitor the work and in accordance with the stipulations on equipment operation and excavation methods. The ways in which the channel widening and deepening will be accomplished through the site must be specialized. For example, the thickness of bucket or blade cuts is reduced, and thus a smaller areal exposure for the monitoring archaeologist to see and inspect. Also, the archaeologist will occasionally want to "pause" equipment to get a closer at soils for evidence of an archaeological feature, without lengthy delays. The contractor will therefore have a lower production rate compared to the straightforward channel work elsewhere. This specialized approach will be limited initially to a trial period of 2 to 3 work days, and the results reviewed by USACE to decide whether to continue with the specialized plan.

Of importance is that the monitoring shall be conducted in a controlled fashion. The contractor is advised that if archaeological finds are made during monitoring at site SCL-593, the archaeologist will have the authority to temporarily suspend or restrict work in order to implement the evaluation and removal actions, and the work will commence only when the proper protocols are met and the contractor is informed to resume work. The contractor's work in other portions of the project area (outside the boundaries of site SCl-593) shall be subjected to periodic inspections by the archaeologist. This will require coordination for site access, but not hinder the contractor's operations.

Under the direction of the archaeologist, the contractor shall immediately stop work within 50 feet of the location of any discovery of archaeological features. Archaeological features include but are not limited to (a) concentrations of prehistoric artifacts such as chipped stone arrow or spear projectile, and ground stone tools such as stone mortars and pestles, (b) deposits of ash-stained soils ("midden") from daily living activities, and (c) concentrations of fire-altered rock and/or burned or charred organic materials from hearths. Following any work stoppage and during the archaeological actions to remove the finds, equipment may continue operations at other locations outside the 50-foot discovery area under the supervision of the monitoring archaeologist.

The duration of work stoppage at the discovery site shall be sufficient to allow the monitoring archaeologist to conduct an evaluation of the significance of the find and to receive verbal authorization from USACE to remove the feature. It is estimated that 48 hours from discovery would be sufficient time to complete this step. The estimated duration of recording and removing features would range from 48 to 72 hours. Per the MOA, a "significant" archaeological find would require review and consultation with the SHPO, and would add an additional 48 hours.

Human Burial Discoveries

Pursuant to the requirements of the State of California Public Resources Code Section 5097.94 and the Health and Safety Code Section 7050.5, upon discovering or unearthing any

CONFORMED

burial site as evidenced by human skeletal remains, the archaeologist shall immediately notify the Santa Clara County Coroner. The contractor shall immediately secure the site and protect any human remains from further disturbance, and will no conduct additional excavation or disturbance of the finds within a 50-foot radius. Upon determination by the County Coroner that the remains are Native American, the Coroner will contact the Native American Heritage Commission. Because human remains connected to site CA-SCL-593 have been uncovered and removed in consultation with the current MLD, Mr. Andrew Galvan, this established process will likely continue for all future uncovered human remains from SCL-593. The Burial Treatment Plan and recommendations of the MLD previously approved and implemented will be adhered to.

The contractor will be advised that if burials are encountered, the same suspend-work provisions described above will be invoked. In addition, the USACE will arrange access to burial site locations by permission from the Santa Clara Valley Water District and other landowners depending on the exact location, and the contractor will be bound by provisions of any real estate permit or easement conditions.

Report of Monitoring Results and Disposition of Cultural Materials

The monitoring results, the outcome of archaeological studies, and removal of features shall be documented in a field survey report, including a description of work, findings, and appropriate maps and photos. All information regarding cultural resources including site locations, Native American human remains, and associated funerary objects will be kept confidential and will not be made available for public disclosure. The written report will be submitted to the USACE who shall coordinate with the SHPO as needed.

Final disposition of all collected archaeological materials shall be documented in the field report. Long-term storage of the archaeological collections shall be housed at the facility nearest to the discovery locale that conforms to Federal guidelines for curation of archaeological collections (36 CFR 79).

All authored reports by the consulting archaeologist shall be prepared in draft form for review by USACE and Native American consultants. The final report along with updated standard California records (DPR 523 series) shall be filed at the Northwest Information Center, California Historical Resources Information System.

CONFORMED

The use of signs to identify Corps managed or supervised design, construction, and rehabilitation projects - both for military and civil works - is an important part of efforts to keep the public informed of Corps work. For this purpose, a construction project sign package has been adopted. This package consists of two signs: one for project identification and the other to show on-the-job safety performance of the contractor.

These two signs are to be displayed side by side and mounted for reading by passing viewers. Exact placement location will be designated by the contracting officer's representative.

The panel sizes and graphic formats have been standardized for visual consistency throughout all Corps operations.

Panels are fabricated using HDO plywood or aluminum with dimensional lumber uprights and bracing. The sign faces are nonreflective vinyl.

All legends are to be die-cut or computer-cut in the sizes and typefaces specified and applied to the white panel background following the graphic formats shown on pages 16-2 and 16-3. The Communication Red panel on the left side of the construction project sign with Corps Signature (reverse version) is screen-printed onto the white background.

A display of these two signs is shown on the following two pages. Mounting and fabrication details are provided on page 16-4.

Special applications or situations not covered in these guidelines should be referred to the district Sign Program Manager.

CONFORMED

Construction Project Identification Sign

Below are two samples of the Construction Project Identification sign showing how this panel is adaptable for use to identify either military (top) or civil works projects (bottom). The graphic format for this 4'x 6' sign panel follows the legend guidelines and layout as specified below. The large 4'x 4' section of the panel on the right is to be white with black legend. The 2'x 4' section of the sign on the left with the full Corps Signature (reverse version) is to be screen-printed Communication Red on the white background The designation of a sponsor in the area indicated is optional with Military or Civil Works construction signs. Signs may list one sponsoring entity. If agreement on a sponsor designation cannot be achieved, the area should be left blank.

This sign is to be placed with the Safety Performance sign shown on the following page. Mounting and fabrication details are provided on page 16-4.

Special applications or situations not covered in these guidelines should be referred to the district Sign Program Manager.

Legend Group 1: One- to two-line description of Corps relationship to project.
Color: White
Typeface: 1.25" Helvetica Regular
Maximum line length: 19"

Legend Group 2: Division or District Name (optional). Placed below 10.5" reverse Signature (6" Castle).
Color: White
Typeface: 1.25" Helvetica Regular

Legend Group 2a: One- to three-line identification of Military or Civil Works sponsor (optional). Place below Corps Signature to cross-align with Group 5a-b.
Color: White
Typeface: 1.25" Helvetica Regular
Maximum line length: 19"

Legend Group 3: One- to three-line project title legend describes the work being done under this contract.
Color: Black
Typeface: 3" Helvetica Bold
Maximum line length: 42"

Legend Group 4: One- to two-line identification of project or facility (civil works) or name of sponsoring department (military).
Color: Black
Typeface: 1.5" Helvetica Regular
Maximum line length: 42"

Cross-align the first line of Legend Group 4 with the first line of the Corps Signature (US Army Corps) as shown.

Legend Groups 5a-b: One- to five-line identification of prime contractors including: type (architect, general contractor, etc.), corporate or firm name, city, state. Use of Legend Group 5 is optional.
Color: Black
Typeface: 1.25" Helvetica Regular
Maximum line length: 21"

All typography is flush left and rag right, upper and lower case with initial capitals only as shown. Letter- and word-spacing to follow Corps standards as specified in Appendix D.

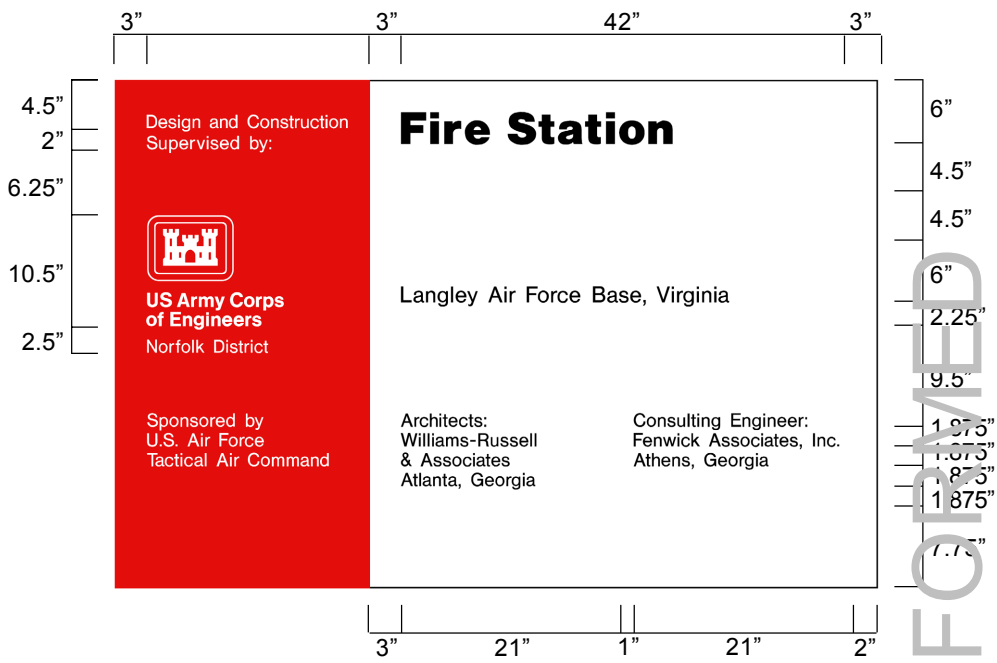

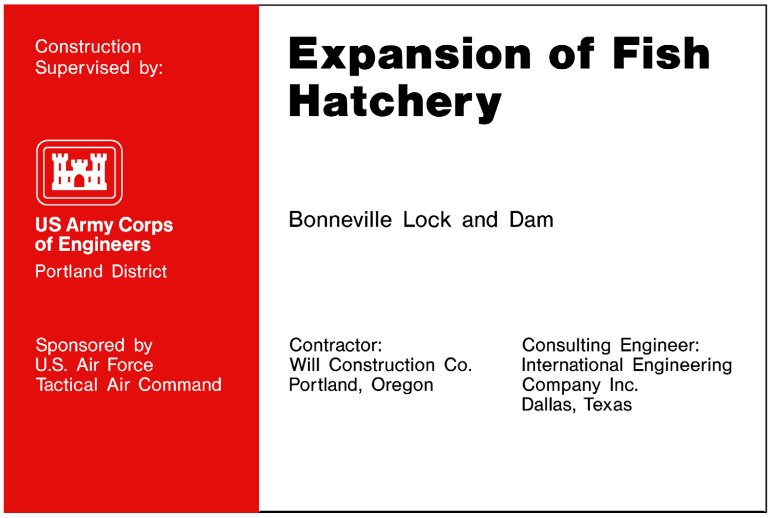

Sign Type	Legend Size (A)	Panel Size	Post Size	Specification Code	Mounting Height	Color Bkg/Lgd
CID-01	various	4'x6'	4"x4"	HDO-3	48"	WH-RD/BK

CONFORMED

Each contractor's safety record is to be posted on Corps managed or supervised construction projects and mounted with the Construction Project Identification sign specified on page 16-2.

The graphic format, color, size and typefaces used on the sign are to be reproduced exactly as specified below. The title with First Aid logo in the top section of the sign, and the performance record captions are standard for all signs of this type. Legend groups 2 and 3 below identify the project and the contractor and are to be placed on the sign as shown.

Safety record numbers are mounted on individual metal plates and are screw-mounted to the background to allow for daily revisions to posted safety performance record.

Special applications or situations not covered in these guidelines should be referred to the district Sign Program Manager.

Legend Group 1: Standard two-line title "Safety is a Job Requirement" with 8" (outside diameter) Safety Green first aid logo.
Color: To match Pantone system 347
Typeface: 3" Helvetica Bold
Color: Black

Legend Group 2: One- to two-line project title legend describes the work being done under this contract and name of host project.
Color: Black
Typeface: 1.5" Helvetica Regular
Maximum line length: 42"

Legend Group 3: One- to two-line identification: name of prime contractor and city, state address. Color: Black
Typeface: 1.5" Helvetica Regular
Maximum line length: 42"

Legend Group 4: Standard safety record captions as shown.
Color: Black
Typeface: 1.25" Helvetica Regular

Replaceable numbers are to be mounted on white .060 aluminum plates and screw-mounted to background.
Color: Black
Typeface: 3" Helvetica Regular
Plate size: 2.5" x 4.5"

All typography is flush left and rag right, upper and lower case with initial capitals only as shown. Letter- and word-spacing to follow Corps standards as specified in Appendix D.

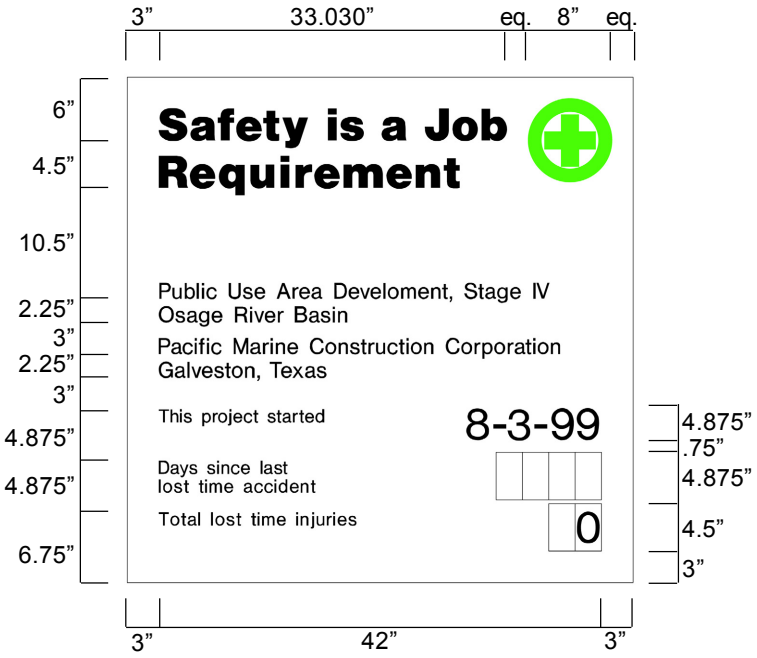

Sign Type	Legend Size (A)	Panel Size	Post Size	Specification Code	Mounting Height	Color Bkg/Lgd
CID-02	various	4'x4'	4"x4"	HDO-3	48"	WH/BK-SG

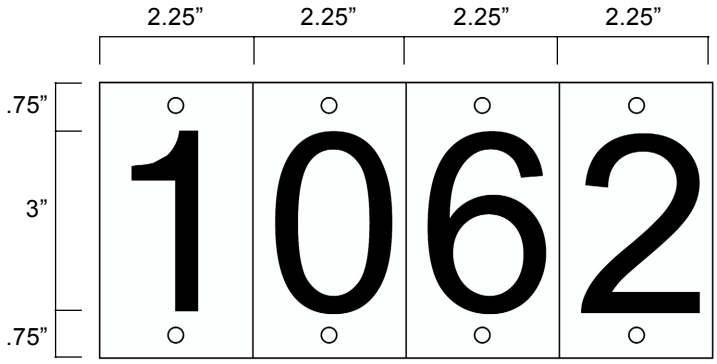

CONFORMED

Fabrication and Mounting Guidelines

All Construction Project Identification signs and Safety Performance signs are to be fabricated and installed as described below. The signs are to be erected at a location designated by the contracting officer representative and shall conform to the size, format, and typographic standards shown on pages16-2 and 16-3. Detailed specifications for HDO plywood panel preparation are provided in Appendix B.

Shown below the mounting diagram is a panel layout grid with spaces provided for project information. Photocopy this page and use as a worksheet when preparing sign legend orders.

For additional information on the proper method to prepare sign panel graphics, contact the district Sign Program Manager.

The sign panels are to be fabricated from .75" High Density Overlay Plywood. Panel preparation to follow HDO specifications provided in Appendix B.

Sign graphics to be prepared on a white nonreflective vinyl film with positionable adhesive backing.

All graphics except for the Communication Red background with Corps Signature on the project sign are to be die-cut or computer-cut nonreflective vinyl, prespaced legends prepared in the sizes and typefaces specified and applied to the background panel following the graphic formats shown on pages 16-2 and 16-3.

The 2'x 4' Communication Red panel (to match Pantone system 032) with full Corps Signature (reverse version) is to be screen-printed on the white background. Identification of the district or division may be applied under the signature with white cut vinyl letters prepared to Corps standards.

Drill and insert six (6) .375" T-nuts from the front face of the HDO sign panel. Position holes as shown. Flange of T-nut to be flush with sign face.

Apply graphic panel to prepared HDO plywood panel following manufacturers' instructions.

Sign uprights to be structural grade 4" x 4" treated Douglas Fir or Southern Yellow Pine, No.1 or better. Post to be 12' long. Drill six (6) .375" mounting holes in uprights to align with T-nuts in sign panel. Countersink (.5") back of hole to accept socket head cap screw (4" x .375").

Assemble sign panel and uprights. Imbed assembled sign panel and uprights in 4' hole. Local soil conditions and/or wind loading may require bolting additional 2" x 4" struts on inside face of uprights to reinforce installation as shown.

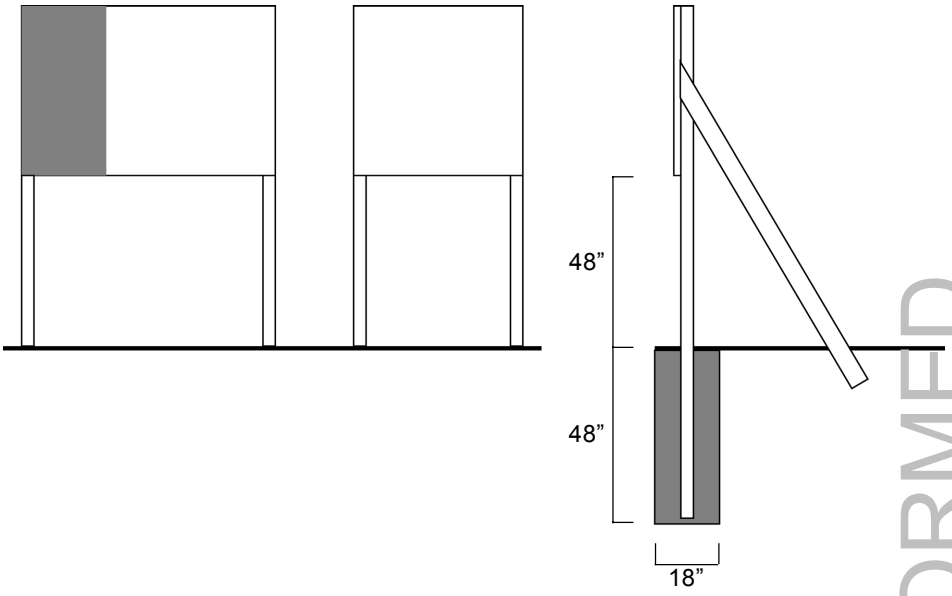

Construction Project Identification Sign
Legend Group 1: Corps Relationship

1. _____
2. _____

Legend Group 2: Division/District Name

1. _____
2. _____

Legend Group 2a: Military/Civil Works Sponsor

1. _____
2. _____

Legend Group 3: Project Title

1. _____
2. _____
3. _____

Legend Group 4: Facility Name

1. _____
2. _____

Legend Group 5: Contractor/A&E

1. _____
2. _____
3. _____
4. _____
5. _____

Legend Group 5b: Contractor/A&E

1. _____
2. _____
3. _____
4. _____
5. _____

Safety Performance Sign
Legend Group 2: Project Title

1. _____
2. _____

Legend Group 3: Contractor/A&E

1. _____
2. _____

CONFORMED

GROUNDWATER MANAGEMENT PLAN

UPPER BERRYESSA CREEK FLOOD RISK MANAGEMENT PROJECT
JONES CHEMICAL INC. PLUME AREA
MILPITAS, SANTA CLARA COUNTY, CALIFORNIA

Prepared for:

Santa Clara Valley Water District
5750 Almaden Expressway
San Jose, CA 95118-3686

Prepared by:

Tetra Tech, Inc.
17885 Von Karman Avenue, Suite 500
Irvine, California 92614-6213

March 10, 2016

CONFORMED

[This page intentionally left blank]

CONFORMED

TABLE OF CONTENTS

1.0 INTRODUCTION **1**

2.0 SUMMARY OF GROUNDWATER CONDITIONS **1**

2.1 AREA OF INTEREST BOUNDARIES 1
2.2 PROJECT AREA HYDROGEOLOGY 1
2.3 CONTAMINANTS 2

3.0 BERRYESSA CREEK WIDENING PLANS **2**

3.1 CONSTRUCTION METHODOLOGY 2
3.2 IMPORT AND DISPOSAL 3
3.3 CONSTRUCTION EQUIPMENT AND WORKERS 3

4.0 PERMITTING EVALUATION **3**

5.0 DIVERSION AND CONTROL OF AOI GROUNDWATER **4**

5.1 COFFERDAM 4
5.2 GROUNDWATER WELLS 5
5.2.1 Well Spacing and Expected Pumping Volume 5
5.2.2 Typical Dewatering Well Construction Details 5

6.0 GROUNDWATER TREATMENT AND CONVEYANCE EQUIPMENT **6**

7.0 COMPLIANCE MONITORING **7**

7.1 COMPLIANCE SAMPLING 7
7.1.1 Compliance Sampling: Day 1 of Operation 7
7.1.2 Compliance Sampling: Day 5 of Operation 8
7.1.3 Discharge Monitoring 8
7.2 MEDIA BREAKTHROUGH MONITORING 9

8.0 MEDIA CHANGE-OUT PROCEDURES **9**

8.1 HAZARDOUS WASTE DISPOSAL SITE 10

9.0 REPORTING **10**

10.0 DEMOBILIZATION **11**

11.0 HEALTH AND SAFETY OVERVIEW **11**

12.0 REFERENCES **12**

CONFORMED

LIST OF TABLES

Table 1 Volatile Organic Compound in Area of Interest Groundwater
Table 2 Extracted Groundwater Sampling Requirements
Table 3 Groundwater Treatment Standards
Table 4 Hazardous Thresholds for Granular Activated Carbon

LIST OF FIGURES

Figure 1 JCI Shallow Groundwater Plume
Figure 2 Area of Interest
Figure 3 Proposed Project Typical Sections
Figure 4 Approximate Location of Shallow Groundwater Extraction Wells in AOI
Figure 5 Process Flow Schematic

LIST OF ATTACHMENTS

Attachment A SFBRWQCB Non-Enforcement Letter dated August 14, 2015
Attachment B Photograph of Typical Temporary Groundwater Treatment Plant
Attachment C Typical Specifications for a 100 Gallons Per Minute Temporary Groundwater Treatment Plant
Attachment D Typical Specifications for 700 Gallons Per Minute Temporary Groundwater Treatment Plant

CONFORMED

ABBREVIATIONS AND ACRONYMNS

AOI	Area of Interest
bgs	below ground surface
DCA	dichloroethane
DCE	dichloroethene
DDR	Design Documentation Report
EPA	Environmental Protection Agency
ESL	Environmental Screening Levels
FEMA	Federal Emergency Management Agency
GAC	granular activated carbon
gpm	gallons per minute
GWMP	Groundwater Management Plan
HASP	Health and Safety Plan
HAZWOPER	Hazardous Waste Operations and Emergency Response
JCI	Jones Chemical, Inc.
JSAs	Job Safety Analyses
MCL	maximum contaminant level
ND	not detected
NPDES	National Pollutant Discharge Elimination System
PCE	Tetrachloroethylene
PVC	Polyvinyl chloride
RCRA	Resource Conservation and Recovery Act
SFBRWQCB	San Francisco Bay Regional Water Quality Control Board
TCE	Trichloroethylene
TCLP	Toxicity Characteristic Leaching Procedure
TDS	total dissolved solids
UPRR	Union Pacific Railroad
USACE	United States Army Corps of Engineers
VC	vinyl chloride
VOC	volatile organic compound
µg/L	micrograms per liter

CONFORMED

[This page intentionally left blank]

CONFORMED

1.0 INTRODUCTION

This Groundwater Management Plan (GWMP) has been prepared to guide field activities within the Jones Chemical, Inc. (JCI) groundwater plume during implementation of the Berryessa Creek Flood Risk Management Project (the Project). This GWMP will be implemented by the Construction Contractor as part of the Project that is being managed by the United States Army Corps of Engineers. In general, the GWMP defines the conceptual approach for the extraction, conveyance, and treatment of groundwater within the Area of Interest (AOI) that is bound by the intersection of the Project and the JCI groundwater plume (see Figures 1 and 2). This GWMP does not apply to any work performed outside the AOI and will only be utilized if groundwater is encountered by the Construction Contractor while performing work within the AOI.

2.0 SUMMARY OF GROUNDWATER CONDITIONS

This section summarizes the AOI boundaries, Project area hydrogeology, and the conditions associated with the JCI groundwater plume.

2.1 Area of Interest Boundaries

The AOI is bound by the Project boundaries and the JCI groundwater plume. As shown on Figure 2, the dimensions of the AOI where channel construction will take place are approximately 70 feet wide by approximately 1000 feet long, or approximately from Station 155+00 to Station 165+00 on the construction plan sheets The sequencing of work within the AOI will be at the discretion of the Construction Contractor. However, for the purposes of this GWMP, it is assumed that the Construction Contractor will perform work in 300-foot sections, excavating and backfilling each 300-foot section before progressing to the next section. It will take approximately 2-4 weeks to complete the work within the AOI.

2.2 Project Area Hydrogeology

The Project area is underlain by interbedded alluvial sediments composed of sand, gravel, silt, and clay. The uppermost 5 to 10 feet of the subsurface consists of fill material, which is clay, gravely clay, sand, and gravel. Sediments underlying the fill material predominantly consist of clay, silty clay, and sandy clay, with variable amounts of sand and gravel. The clays encountered in soil borings contain intervals of sand ranging in thickness from several inches to approximately 11 feet. Historically, the depth to groundwater within the AOI has ranged between approximately 7 to 20 feet below ground surface (Tetra Tech, 2015a, and http://geotracker.waterboards.ca.gov/profile_report.asp?global_id=SL18213593).

Tetra Tech drilled a soil boring in the AOI in December 2014 (Tetra Tech, 2015a); a saturated zone was encountered from 15.5 feet bgs to 19 feet below ground surface (bgs), returning to slightly moist soil conditions from 19 feet to 20 feet bgs. Upon removal of the drilling rods, the groundwater level rose to 13 feet below grade in the boring.

Historical groundwater elevation data collected at and near the project area indicate groundwater flows generally toward the west-northwest.

CONFORMED

2.3 Contaminants

The groundwater beneath the AOI is impacted by volatile organic compounds (VOCs), attributed to the 1982 chlorinated solvent spill at the former JCI Facility. The following VOCs have recently been detected in shallow groundwater within the AOI at concentrations exceeding maximum contaminant levels (MCLs): tetrachloroethylene (PCE), trichloroethylene (TCE), trans–1,2-dichloroethene (t-1,2-DCE), cis-1,2-DCE, 1,1-dichloroethane (1,1-DCA), 1,1-DCE, and vinyl chloride (VC). The Semiannual Groundwater Monitoring Reports dated February 27, 2015 (Arcadis, 2015a) and August 31, 2015 (Arcadis, 2015b) for the former JCI facility indicate that VOCs were detected during these two reporting periods in JCI groundwater monitoring wells B14, B15, B19, B58, and B59 (the JCI groundwater monitoring wells that are closest to the AOI) at concentrations that ranged from not detected above the laboratory reporting limit (ND) to 1,400 micrograms per liter (ug/L) as shown on Figure 1. These data are summarized and compared to the pertinent MCL and San Francisco Bay Regional Water Quality Control Board (SFBRWQCB) Environmental Screening Levels (ESL) in Table 1 in the Tables Section following the report narrative.

3.0 BERRYESSA CREEK WIDENING PLANS

Upper Berryessa Creek will be redesigned to provide flood damage reduction benefits from the overpass of I-680 to the upstream side of Calaveras Boulevard. The increased flood protection will include Widening to add capacity and bank protection to provide channel stability.

The major features of the project in the AOI include widening the creek channel, installing a concrete box culvert to replace an existing railroad trestle, and expanding or surfacing existing access roads with aggregate paving. Figure 3 shows the following features:

- The channel banks would be excavated with 2H:1V channel sideslopes.
- Buried rock revetment would be placed for scour protection from the toe of bank to between the 2.5-year and 10-year flood elevation, with the installation of biodegradable erosion control blankets and vegetation between the top of the rock revetment and the top of the bank
- The existing Union Pacific Railroad (UPRR) trestle bridge would be replaced with a double-barreled box culvert, with Concrete, warped wingwall transition structures upstream and downstream of the newly-constructed UPRR trestle.
- Two aggregate-paved maintenance roads, 18 feet wide and 15 feet wide will be located on the right and left banks looking downstream, respectively, within this area.

As shown in the profile on Figure 3, proposed excavation typically ranges from 1-3 feet below the current channel bottom and approximately 12-13 feet below ground surface (bgs) at areas proposed for widening of the channel. In the AOI, borings conducted in 2014 found saturated soils approximately 15-20 feet bgs. Results from 2014 monitoring well data for this location yielded an average depth to groundwater of 12.1 feet bgs.

3.1 Construction Methodology

The main construction components listed below are provided in roughly the sequence in which they would occur, although several of the components may occur concurrently. In addition to these construction components, the railroad trestle bridge that is within the AOI will be replaced. This replacement includes

CONFORMED

removal of the existing bridge and placing a prefabricated concrete box culvert upon which UPRR will replace the track.

- Utility relocations
- Clearing and grubbing
- Excavation with dewatering as required
- Placement and compaction of fill
- Placement of geotextile fabric
- Importing and placement of rock revetment
- Placement of biodegradable turf reinforcement mats
- Plantings as required
- Placement of aggregate base on the access roadways

3.2 Import and Disposal

Soil, reinforcing steel, vegetation, and concrete will be excavated during construction. Some of the clean excavated soils will be reused on-site. Vegetation will be composted, steel and concrete debris will be recycled, and the balance of the materials will be disposed of at one or more approved landfills.

3.3 Construction Equipment and Workers

The following equipment is anticipated to be used during Project implementation within the AOI:

- Backhoes
- Bulldozers
- Cranes
- Compactors
- Concrete trucks
- Graders
- Excavators
- Jackhammers
- Dump trucks/haul trucks
- Loaders
- Pumps
- Scrapers

Construction will either occur over two dry seasons from May to October, or continuously for one year. Construction hours will generally be during normal business hours, but after-hours work may be needed for concrete pours or replacement of the existing UPRR trestle with a concrete box culvert. The types of construction equipment in use and the number of workers actively working at the project area will vary depending on the phase of construction. The number of workers present on any given day is estimated at 25 in general, and up to 40 on occasion.

CONFORMED

4.0 PERMITTING EVALUATION

A Notice of Intent will not be submitted to obtain coverage for managing groundwater associated with the AOI under the National Pollutant Discharge Elimination System (NPDES) general permit. As a result of not obtaining this permit, the SFBRWQCB has required the preparation and submittal of this GWMP which provides the methods and procedures for controlling and diverting groundwater, if necessary, while working within the AOI, as identified in their August 14, 2015 non-enforcement letter and included in Attachment A.

Prior to discharge, the AOI groundwater will be treated to meet the standards set forth in the NPDES General Permit No. CAG912002 (NPDES Permit) for fuel and VOC impacted sites under the requirements of SFBRWQCB Order No. R2-2012-0012 (SFBRWQCB, 2015).

If dewatering wells are installed to lower the water table (see Section 5.0), the Construction Contractor will obtain all appropriate permits which can include permits and/or authorization from the Santa Clara Valley Water District to install and abandon the wells.

5.0 DIVERSION AND CONTROL OF AOI GROUNDWATER

Depending on field conditions at the time of Project implementation, it may be necessary to control and divert groundwater to achieve the Project objectives and comply with Project requirements including excavation, placement of material, and soil compaction. As is the case throughout the Project reach, the Construction Contractor will determine whether groundwater control and diversion is necessary in order to, for example, lower the groundwater level at the start of construction or limit water seepage into the construction zone during construction.

This GWMP applies only to work within the AOI. In addition to this GWMP, all work within the AOI shall be performed in accordance with the Project Rain Event Action Plan, design drawings, specifications, and permits.

If the Construction Contractor (1) determines that groundwater will be exposed and/or encountered within the AOI, or (2) if groundwater is exposed and/or encountered within the Project AOI during construction, the Construction Contractor will control and collect the groundwater, prior to treatment and discharge, by selecting and implementing one or a combination of the following methods. Both are considered acceptable. The Contractor's selection will consider the observation of field conditions, effectiveness of the methods, and relative time and cost.

- Constructing cofferdams at the downgradient end of the AOI or sections of the AOI that are under construction; and/or
- Installing and operating dewatering wells.

5.1 Cofferdam

If the Construction Contractor opts to design, construct, and utilize a cofferdam for groundwater control and diversion, the Construction Contractor will grade the AOI to direct groundwater flow to the cofferdam where the groundwater will be temporarily stored until it is pumped to the groundwater treatment equipment that is described in Section 6.0. If groundwater is too evenly spread across the surface to be effectively pumped to the treatment system, the Construction Contractor may decide to provide interim grading to one location and/or implement a small basin or sump from which to pump. The size of both the cofferdam and any sump that may be required, as well as the period of time that the cofferdam is required to contain water, is dependent on the field conditions at the time of construction.

In accordance with SFBRWQCB guidelines, the Construction Contractor shall submit to the Project Engineer for review, a cofferdam design that, at a minimum, identifies the following:

- Construction material
- Height of structure(s)
- How the area will be dewatered
- Overtopping precautions such that overtopping will not occur, and

CONFORMED

- Discharge locations and structures

The treated groundwater will be discharged downstream in Berryessa creek.

5.2 Groundwater Wells

Alternatively, the Construction Contractor may opt to install and operate shallow dewatering wells to lower the water table prior to commencing work within the AOI. Dewatering contractors with extensive San Francisco Bay experience estimated that dewatering groundwater in the project area will require approximately 20 groundwater extraction wells on 50-foot centers to lower the shallow groundwater table.[1] The exact spacing of the dewatering wells may vary based on the amount of groundwater encountered during construction. The extraction wells, if installed, will be located along the west side of Berryessa Creek as shown on Figure 4. The extracted water will be pumped above ground to the treatment plant that is described in Section 6.0 prior to subsequent discharge.

5.2.1 Well Spacing and Expected Pumping Volume

The dewatering wells, if installed, are anticipated to initially operate at approximately 40 gallons per minute (gpm) each. Once the water column in each well and the gravel pack around each well are dewatered, the sustainable extraction rate will likely decrease to a sustainable rate of approximately 5 gpm per well.

Assuming that 20 wells will be installed along the 980-foot length of the AOI, the combined extraction rates are anticipated to range between100 and 800 gpm. Alternatively, the Construction Contractor may opt to dewater one section (see Section 2.1) at a time, in which case the flow rate is expected to range between 30 and 240 gpm.

5.2.2 Typical Dewatering Well Construction Details

The extraction wells, if needed, will be approximately 40 feet deep, screened from 10 to 40 feet below ground surface and will be constructed of six-inch schedule 40 polyvinyl chloride (PVC).[2] The 30-foot length screened interval is anticipated to provide sufficient drawdown for the water elevations that may be encountered during construction. Each well will be equipped with a dedicated, variable-rate pump; the extracted water will be pumped above ground to the treatment plant that is described in Section 6.0 prior to subsequent discharge. The wells shall be powered by a single, portable, trailered diesel-powered generator.

The trailered diesel-powered generator shall be installed on the Project overbank to avoid potential risks associated with rain events and any external fuel tanks will also be placed on the Project overbank. The Construction Contractor shall take necessary precautions that any wiring, conduit, or pipe connecting the generator(s) to the wells shall not be damaged by construction vehicles.

CONFORMED

[1] January 17, 2015 telephone conversation between Adam Medina, Viking Drillers, Inc. and Keith Hoofard, Tetra Tech

[2] Depth based on conversations with experienced personnel as referenced in footnote #1 on this page.

6.0 GROUNDWATER TREATMENT AND CONVEYANCE EQUIPMENT

A temporary treatment plant will treat groundwater that becomes exposed and, therefore, subsequently collected per Section 5, above.

As shown on Figure 4, the temporary groundwater treatment plant can be located within the channel, adjacent to the AOI, and effectively isolated from any nuisance flow within the channel, if necessary, through the use of berms, K-rails, or other features at the Construction Contractor's discretion. The Contractor shall provide ramp access as part of the overall construction effort. These ramps shall be available for access to the temporary groundwater treatment plant. As an alternative to the in-channel location of the treatment equipment, at the Contractor's discretion, the equipment can also be located along the top of the channel as long as it does not interfere with construction activities.

A process flow schematic is provided as Figure 5. Groundwater will be pumped from the cofferdam or dewatering wells to the open-top equalization tank to allow sediments to settle out of the groundwater. From the equalization tank, the groundwater will be pumped through a *filtration train* that includes sand filtration and organoclay filtration vessels. These will provide a "polish" to the sediment removal to prevent blockage prior to being pumped through the *treatment train* which will remove VOCs by adsorption within the granular activated carbon (GAC) vessels. The treated water will then flow to a second open-top batch tank for temporary storage (as needed) and to allow a controlled discharge rate to Berryessa Creek. The point of discharge will be at the outlet of the open-top batch tank.

The Construction Contractor shall have sufficient cranes, forklifts, trucks, and personnel onsite while working within the AOI to remove all equipment associated with the temporary groundwater treatment plant within 24 hours of notification of a pending rain event. Typical specifications for a 100 gallon per minute temporary treatment system and a 700 gallon per minute treatment system are provided as Attachments C and D, respectively.[1]

As shown on Figure 5, compliance-sampling ports will be located:

- after the final filter and before the first GAC vessel (INF-001);
- between the two GAC vessels (MID-001); and
- after the second GAC vessel, before mixing with any other water (EFF-001).

The treatment plant and extraction wells will be powered by portable diesel generators. The treatment plant and dewatering system may have to operate 24 hours per day, depending on treatment requirements dictated by the amount of groundwater flow at the time of construction. A photograph of a typical temporary groundwater treatment plant is provided as Attachment B for illustrative purposes. Note that the temporary groundwater treatment system that will likely be needed for the Project will be a smaller scale system compared to that shown in Attachment B.

CONFORMED

[1] NOTE: All equipment brands depicted herein shall be considered as "typical" and are provided for reference purposes, with "or equivalent" applicable to all equipment.

7.0 COMPLIANCE MONITORING

This section presents procedures for sampling the treated groundwater. The analytical results of the treatment system samples will be reported to the SFBRWQCB as described in Section 9.0.

7.1 Compliance Sampling

Compliance sampling will be performed on the first and fifth days of operation, and will consist of collecting groundwater samples from sampling port INF-001 (see Figure 5) and EFF-001 (see Figure 5) in accordance with Table E-2 of the SFBRWQCB Order; the pertinent information from this table is reproduced in Table 2 in the Tables Section following the report narrative.

7.1.1 Compliance Sampling: Day 1 of Operation

The objective of sampling the influent and effluent groundwater on the first day of operation is to confirm compliance with the discharge standards. Groundwater from the AOI shall not be discharged to Berryessa Creek until compliance with the discharge standards is demonstrated. Thus, the treated groundwater will be discharged to a holding tank for temporary storage to prevent discharge to Berryessa Creek until compliance with the discharge standards is demonstrated as described in the following sections. Furthermore, the groundwater control, diversion, and the Construction Contractor may opt to shut down dewatering activities until compliance is demonstrated to reduce the amount of storage needed. If the system is shut down for more than 120 hours, the compliance sampling shall be repeated. System shutdown to reduce the amount of storage needed shall only occur if no consequences to construction activities within the AOI nor seepage downstream will occur due to a high accumulation of groundwater exposure as a result of the shutdown. If these consequences may occur, then additional storage facilities must be made available to preclude untreated groundwater from migrating downstream.

An influent groundwater sample shall be collected from sampling port INF-001 (see Figure 5) on the first day of operation. This influent groundwater sample shall be monitored in the field for pH and submitted to a state-certified laboratory for analysis of VOCs by Environmental Protection Agency (EPA) Method 8260B.

An effluent groundwater sample shall be collected from sampling port EFF-001 (see Figure 5) on the first day of operation. This effluent groundwater sample shall be monitored in the field for turbidity, pH, temperature, and electrical conductivity and submitted to a state-certified laboratory for analysis of: VOCs by EPA Method 8260B and total dissolved solids (TDS) by SM 2540.

The laboratory analytical results from the startup groundwater samples collected on the first day of operation shall be compared to the effluent concentrations identified in Table 2 of the Order (Column B: Discharge to Other Surface Water Areas), which is reproduced in Table 3 in the Tables Section following the report narrative.

If all of the effluent analytical results are less than the maximum daily effluent limitations listed above, the treated groundwater shall be deemed to be in compliance, and discharge of the treated water to Berryessa Creek may commence. If any of the effluent analytical results exceed the maximum daily effluent limitations listed above, discharge of the treated groundwater shall not be allowed and startup sampling shall be repeated until compliance is demonstrated. At the Construction Contractor's discretion it may be appropriate to replace the GAC to achieve compliance with the discharge standards.

CONFORMED

7.1.2 Compliance Sampling: Day 5 of Operation

In accordance with the SFBRWQCB Order, the INF-001 and EFF-001 will be sampled on the fifth day of operation. An influent groundwater sample shall be collected from sample port INF-001, and monitored in the field for pH and submitted to a state-certified laboratory for analysis of VOCs by EPA Method 8260B.

An effluent groundwater sample shall be collected from sample port EFF-001, monitored in the field for turbidity, pH, temperature, and electrical conductivity, and submitted to a state-certified laboratory for analysis of:

- VOCs, EPA 8260B
- 1,4-dioxane, EPA 8270C
- total dissolved solids, SM 2540
- total (unfiltered) metals:
    - antimony, EPA 204.2 reporting limit 0.5 ug/L
    - arsenic, EPA 206.3 reporting limit 2.0 ug/L
    - beryllium, GFAA or ICPMS reporting limit 0.5 ug/L
    - cadmium, GFAA or ICPMS reporting limit 0.25 ug/L
    - hexavalent and total chromium, SM 3500 reporting limit 0.5 ug/L
    - copper, EPA 200.9 reporting limit 0.5 ug/L
    - cyanide, SM 4500-CN C or I reporting limit 1 ug/L
    - lead, EPA 200.9 reporting limit 0.5 ug/L
    - mercury, EPA 1631 reporting limit 0.002 ug/L
    - nickel, EPA 249.2 reporting limit 1 ug/L
    - selenium, SM 3114B or C reporting limit 0.5 ug/L
    - silver, EPA 272.2 reporting limit 0.25 ug/L
    - thallium, EPA 279.2 reporting limit 1 ug/L
    - zinc, EPA 200.8 reporting limit 1 ug/L

7.1.3 Discharge Monitoring

In accordance with the SFBRWQCB Order, the effluent discharge to Berryessa Creek will be monitored daily to verify that the discharge is not causing the following:

- Floating, suspended, or deposited macroscopic particulate matter or foam;
- Bottom deposits or aquatic growths to the extent that such deposits or growths cause nuisance or adversely affect beneficial uses;
- Alteration of temperature, turbidity, or apparent color beyond present natural background levels;
- Visible, floating, suspended, or deposited oil or other products of petroleum origin; and
- Toxic or other deleterious substances to be present in concentrations or quantities that will cause deleterious effects on aquatic biota, wildlife, or waterfowl, or which render any of these unfit for human consumption either at levels created in the receiving waters or as a result of biological concentration.

CONFORMED

Additionally, standard observations for the groundwater treatment system will be recorded on each day and will include observations of: odor, weather condition (wind direction and estimated velocity), deposits, discolorations, and/or plugging in the treatment system, and operation of the float and/or pressure shutoff valves to prevent system overflow. Any non-compliance with RWQCB standards for discharge will be rectified prior to continuation of treatment/discharge operations.

7.2 Media Breakthrough Monitoring

The GAC vessels shall be sampled a minimum of weekly to monitor for potential breakthrough. A sample will be collected from sample port MID-001 weekly and analyzed for VOCs by EPA Method 8260B to monitor for potential GAC breakthrough. If VOCs are detected in the MID-001 sample at concentrations that exceed the maximum daily effluent limitations identified in Table 4 in the Tables Section following the report narrative (Column B: Discharge to Other Surface Water Areas) of the SFBRWQCB Order, another sample will be immediately collected and analyzed to confirm the breakthrough. If breakthrough is confirmed, the GAC in the lead vessel will be replaced (see Section 3.0), the original lag vessel will become the lead vessel, and the newly replaced GAC will become the lag vessel.

8.0 MEDIA CHANGE-OUT PROCEDURES

The treatment system will be shut down to replace the spent GAC in the lead vessel. The need to stop the groundwater diversion or extraction during the GAC change-out will be evaluated based on the following: the current available volume to store diverted/extracted water in the equalization tank and the GAC Contractor's time estimate to remove the spent GAC and emplace the new GAC. The above ground extraction water piping will be reconfigured so the former second GAC vessel (lag vessel) becomes the lead vessel and the vessel with the replaced GAC becomes the lag vessel (second in the series).

The GAC Contractor will remove the GAC from the lead vessel after the water has been drained from the vessel. The Contractor will remove the GAC using a vacuum hose, containerize the spent material, and fill the vessel with new GAC. The spent GAC will be profiled for disposal by submitting a sample for analysis of total VOCs and for the Toxicity Characteristic Leaching Procedure (TCLP) for VOCs. The GAC Contractor will remove the spent GAC from the project area and regenerate and/or dispose of the spent GAC appropriately, depending upon whether the profile results exceed hazardous waste thresholds. (Reuse of the GAC would be up to the GAC Contractor but in no instance would it be reused at the Project site.) Hazardous waste thresholds for the chemicals of concern associated with the AOI are presented in Table 4 in the Tables Section following the report narrative.

The EPA regulations establish two ways of identifying solid wastes as hazardous under the Resource Conservation and Recovery Act (RCRA). A waste may be considered hazardous if it exhibits certain hazardous properties ("characteristics") or if it is included on a specific list of wastes EPA has determined are hazardous ("listing" a waste as hazardous) because EPA found the characteristics to pose substantial present or potential hazards to human health or the environment. EPA defines four hazardous waste characteristic properties: ignitability, corrosivity, reactivity, or toxicity. A waste is ignitable if it is:

- a liquid with a flash point of less than 140 degrees F using an approved flash point test,
- a non-liquid that can readily catch fire under standard temperature and pressure, and burns vigorously after ignition so as to create a hazard, and
- is an ignitable compressed gas or a Department of Transportation oxidizer.

CONFORMED

A waste is corrosive if it is:

- an aqueous waste with a pH of less than or equal to 2 or greater than or equal to 12.5, and
- a waste that can corrode steel at a rate of ¼ inch or more per year.

A material is a reactive hazardous waste if it is normally unstable, reacts violently with water, generates toxic gas if exposed to water or corrosive materials, or is capable of detonation if exposed to heat or flame.

A waste is determined to be hazardous based on the toxicity characteristic if a sample of the waste is subject to the TCLP for VOCs at a state-certified analytical laboratory and the results exceed the TCLP limits.

There are four different lists of hazardous wastes (40CFR 261), which are:

- **The F list (non-specific source wastes) –** contains waste from non-specific sources. This list includes solvents commonly used in degreasing, metal treatment baths and sludges, wastewaters from metal plating operations, and dioxin containing chemicals and their precursors.
- **The K list (source-specific wastes) –** designates particular solid wastes from certain specific industries. This listing includes descriptions that are very specific and clear such as wood preservation, pigment production, chemical production, petroleum refining, iron and steel production, explosive manufacturing, and pesticide manufacturing.
- **The P list and the U list (discarded commercial chemical products) –** contain discarded commercial products, off-spec chemicals, contain residues, and residues from chemical spills. The main differences between the two lists are the quantities of chemicals regulated.

It is the generator's responsibility to determine if the waste is a listed waste. The EPA defines a generator as "any person, by site, whose act or process produces hazardous waste identified or listed in part 261 of Title 40 of the Code of Federal Regulations (CFR)".

8.1 Hazardous Waste Disposal Site

Hazardous and non-hazardous waste will be disposed of in accordance with federal, state, and local regulations; the disposal facility will be selected by the contractor, subject to client approval.

CONFORMED

9.0 REPORTING

Any non-compliance releases and spills that may endanger health or the environment must be reported to the National Response Center (NRC)[1] as well as the SFBRWQCB, the Project Engineer, and the Santa Clara Valley Water District within 24 hours of becoming aware of the circumstance. A written submission of the non-compliance, if any, shall be uploaded to GeoTracker within five days of becoming aware of the circumstance.

All analytical results from the AOI will be submitted to the SFBRWQCB within 24 hours of receipt and uploaded to GeoTracker within five days.

[1] The NRC is the sole federal point of contact for reporting all hazardous substance spills and releases, including the VOCs found in the AOI. See their website for more information (http://www.nrc.uscg.mil/nrcrpttxt.htm. See also the reportable quantities promulgated by 40 CFR Part 302.4 and found in Table 302.4 of the following website: https://www.gpo.gov/fdsys/pkg/CFR-2011-title40-vol28/pdf/CFR-2011-title40-vol28-sec302-4.pdf

10.0 DEMOBILIZATION

The Construction Contractor will prepare a Rain Action Event Plan (REAP) meeting guidelines of the California Stormwater Quality Association best management practices for construction activities. The REAP will include detailed directions for removing equipment and materials from the channel if substantial rain is forecast. As noted in Section 6.0, the Construction Contractor shall have sufficient cranes, forklifts, trucks, and personnel onsite while working within the AOI to remove all equipment associated with the temporary groundwater treatment plant within 24 hours of notification of a pending rain event.

Prior to removing the treatment equipment from the Site, The sand filter media, organoclay from the organoclay filter, bag-filter sediment, and GAC from both the lead and lag vessels shall be sampled and analyzed by a state-certified laboratory for total VOCs and TCLP for VOCs for profiling purposes, as required prior to disposal at receiving facilities. The waste classification shall be determined based on the laboratory analytical results federal, state, and local regulations as described in Section 8.0. Hazardous waste thresholds for the chemicals of concern associated with the AOI are presented in Table 4.

Following the waste classification, the sand filter media, organoclay from the organoclay filter, bag-filter sediment, and GAC shall be removed from the respective vessels and transported offsite for lawful disposal. The GAC will be removed and either (1) regenerated and reused, or (2) disposed of off-site, depending whether the profiling results exceed hazardous waste thresholds.

Once the media have been removed, the piping of the components of the portable treatment plant will be disconnected and the individual components will be removed from the site using cranes, forklifts, and/or trucks, as appropriate. The aboveground components of the groundwater conveyance system and the connections to the portable treatment system will be reused by the Construction Contractor or disposed of as inert waste.

As mentioned in Section 4.0, if dewatering wells are installed to lower the water table as discussed in Section 5.0, the Construction Contractor will obtain all appropriate permits which can include permits and/or authorization from the Santa Clara Valley Water District for abandonment of the wells.

CONFORMED

11.0 HEALTH AND SAFETY OVERVIEW

The dewatering contractor and the contractor performing the groundwater extraction and treatment system operation and monitoring will be required to be Hazardous Waste Operations and Emergency Response (HAZWOPER) trained (40-hour training with 8-hour annual updates), in compliance with 29 CFR 1910.120. The contractors are required to prepare their own Health and Safety Plan (HASP) with Job Safety Analyses (JSAs) for each task. At a minimum, the HASP will identify the following:

- Key personnel, general safety guidelines and protocols
- Job hazards
- Training requirements
- Personal protective equipment and engineering controls
- Exposure monitoring plan
- Emergency first aid and decontamination procedures
- Standard operating procedures

12.0 REFERENCES

Arcadis, 2015a. *Semiannual Groundwater Monitoring Report, August 1, 2014 through January 31, 2015, Former JCI Jones Chemical Facility, 985 Montague Expressway, Milpitas, California.* February 27, 2015.

Arcadis, 2015b. Semiannual Groundwater Monitoring Report, February 1, 2015 through July 31, 2015, Former JCI Jones Chemical Facility, 985 Montague Expressway, Milpitas, California. August 31, 2015.

SFBRWQCB, 2015. Letter from Bruce Wolfe to Amanda Cruz. *Berryessa Creek Channel Modification Project, adjacent to the former JCI Jones Chemical Facility, 985 Montague Expressway, Milpitas, Santa Clara County.* August 14, 2015.

Tetra Tech, 2015a. HTRW Soil Sampling Report Including Two Groundwater Grab Samples, Upper Berryessa Creek Flood Risk Management Project Between Montague Expressway and Yosemite Drive, Santa Clara County, Milpitas, California.

Tetra Tech, 2015b. Geotechnical Appendix. Upper Berryessa Creek Flood Risk Management Project I-680 to Calaveras Boulevard Santa Clara County, Milpitas, California. November 24, 2015.

CONFORMED

TABLES

CONFORMED

Table 1
Volatile Organic Compound in Area of Interest Groundwater
Berryessa Creek Widening Project Groundwater Management Plan

Constituent	December 2014 & June 2015 Concentration Range (µg/L)	MCL (µg/L)	ESL (µg/L)
Tetrachloroethylene	2.6 – 1,400	5	5
Trichloroethylene	0.6 – 86	5	5
Trans-1,2-dichloroethylene	0.6 – 16	10	10
Cis-1,2-dichloroethylene	<0.5 – 110	6	6
1,1-dichloroethane	<0.5 – 13	5	5
1,1-dichlorethene	<0.5 – 29	6	6
Vinyl Chloride	0.3 – 3.4	0.5	0.5

Notes:
ESL = Environmental Screening Levels
MCL = Maximum Containment Level
SFBRWQCB = San Francisco Bay Regional Water Quality Control Board
µg/L = micrograms per liter

CONFORMED

Table 2
Extracted Groundwater Sampling Requirements
Berryessa Creek Widening Project Groundwater Management Plan

	Influent (INF-001)						Effluent (EFF-001)						
Parameter	**1st day**	**5th day**	**Monthly**	**Quarterly**	**Semiannually**	**Annually**	**1st day**	**5th day**	**Monthly**	**Quarterly**	**Semiannually**	**Annually**	**Once every 3 yrs**
Discharge Flow (gpm)							continuous	continuous	continuous	continuous	continuous	continuous	continuous
Fish Toxicity 96-hr % survival										x (1st yr)		x (after 1st yr)	
Standard Observations	x	x	x				x	x	x				
VOCs	x	x			x		x	x	x				
1,4-Dioxane								x			x		
Turbidity							x	x		x		x (after 1st yr)	
pH	x	x	x (1st yr)	x (2nd yr)		x (after 2nd yr)	x	x	x (1st yr)	x (2nd yr)		x (after 2nd yr)	
Total dissolved solids							x	x	x				
temperature							x	x	x (1st yr)	x (2nd yr)		x (after 2nd yr)	
Electrical conductivity							x	x	x (1st yr)	x (2nd yr)		x (after 2nd yr)	
Metals								x					x
Discharge Flow Volume									X				

Notes:
Standard Observation for Groundwater Treatment Systems include: odor; weather condition (wind direction and estimated velocity); deposits, discolorations, and/or plugging in the treatment system; operation of the float and/or pressure shutoff valves to prevent system overflow

CONFORMED

Table 3
Groundwater Treatment Standards
Berryessa Creek Widening Project Groundwater Management Plan

Compound	CAS Number	Discharge to Other Surface Water Areas	
		Average Monthly Effluent Limitation (µg/L)	Maximum Daily Effluent Limitation (µg/L)
Benzene	71432	---	5
Carbon Tetrachloride	56235	4.4	5
Chloroform	67663	---	5
1,1-Dichloroethane	75343	---	5
1,2-Dichloroethane	107062	---	5
1,1-Dichloroethylene	75354	3.2	5
Ethylbenzene	100414	---	5
Methylene Chloride	75092	---	5
Tetrachloroethylene (PCE)	127184	---	5
Toluene	108883	---	5
Cis 1,2-Dichloroethylene	156592	---	5
Trans 1,2- Dichloroethylene	156605	---	5
1,1,1-Trichloroethane	71556	---	5
1,1,2-Trichloroethane	79005	---	5
Trichloroethylene (TCE)	79016	---	5
Vinyl Chloride	75014	---	1
Total Xylenes	1330207	---	5
Methyl Tertiary Butyl Ether (MTBE)	1634044	---	5
Total Petroleum Hydrocarbons [TPHs (as gasoline or as diesel)]	---	---	50
Ethylene Dibromide (1,2-Dibromoethane)	106934	---	5
Trichloro- trifluoroethane	76131	---	5
Total Chlorine Residual	---	---	0.0[1]

Notes:
µg/L = micrograms per liter

[1] = There shall be no detectable levels of residual chlorine in the effluent (a non-detect result using a detection level equal or less than 0.08 milligram per liter (mg/L) will not be deemed to be out of compliance). This limit only applies to Dischargers that chlorinate their extracted groundwater.

CONFORMED

Table 4
Hazardous Thresholds for Granular Activated Carbon
Berryessa Creek Widening Project Groundwater Management Plan

Volatile Organic Compound	Regulatory Level (mg/L)
Benzene	0.5
Carbon Tetrachloride	0.5
Chlorobenzene	100
Chloroform	6.0
1,4-Dichlorobenzene	7.5
1,2-Dichloroethane	0.5
1,1-Dichloroethylene	0.7
Tetrachloroethylene	0.7
Trichloroethylene	0.5
Vinyl Chloride	0.2

Notes:
mg/L = milligram per liter

CONFORMED

[This page intentionally left blank]

CONFORMED

FIGURES

CONFORMED

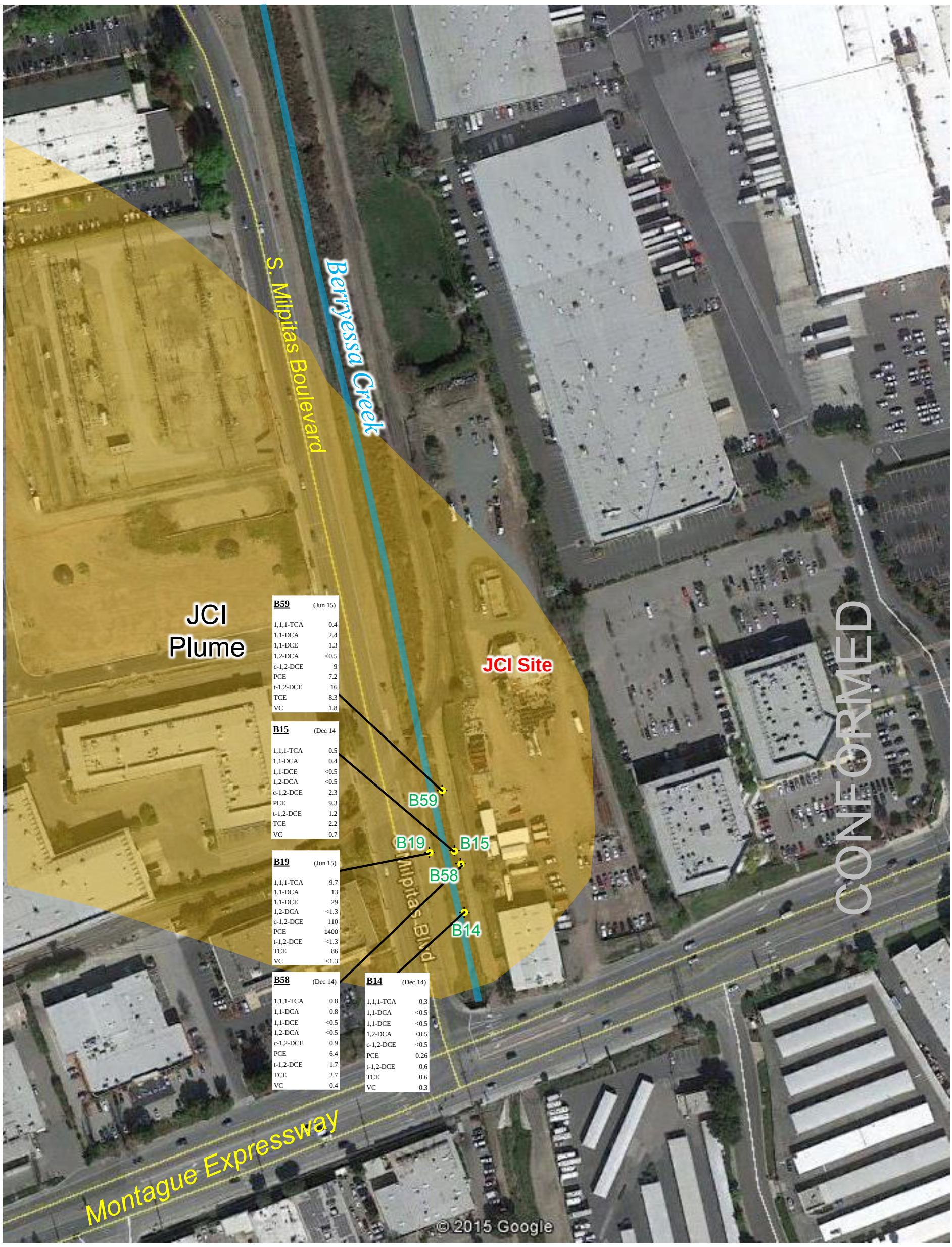

SOURCE: ***Google Earth Pro, February 23, 2014.***

B19 JCI shallow well (screened <40 feet bgs)

Approximate extent of JCI VOC Groundwater Plume

Location ID — **B14** (Dec 14) — Sample Date
Analyte — PCE 0.26 — Concentration (µg/L)

N

0 feet 150

Abbreviations:

1,1,1-TCA	1,1,1-Trichloroethane
1,1-DCA	1,1-Dichloroethane
1,1-DCE	1,1-Dichloroethene
1,2-DCA	1,2-Dichloroethane
c-1,2-DCE	cis-1,2-Dichloroethene
PCE	Tetrachloroethene
t-1,2-DCE	trans-1,2 Dichloroethene
TCE	Trichloroethene
VC	Vinyl Chloride

TITLE: **JCI Shallow Groundwater Plume**

LOCATION: **Upper Berryessa Creek FRMP**
Between Montague Expressway and Yosemite Drive
Milpitas, California

TETRA TECH

CHECKED:	IA	FIGURE:
DRAFTED:	KDH	1
FILE:	100-SWW-T31331	
DATE:	10-15-15	

URCE: *Google Earth Pro, February 23, 2014.*

N

0 feet 75

Area of Interest

Approximate extent of JCI VOC Groundwater Plume

TITLE:	**Area of Interest**
LOCATION:	**Upper Berryessa Creek FRMP** **Between Montague Expressway and Yosemite Drive** **Milpitas, California**

TETRA TECH

CHECKED:	IA	**FIGURE:**
DRAFTED:	KDH	**2**
FILE:	100-SWW-T31331	
DATE:	10-15-15	

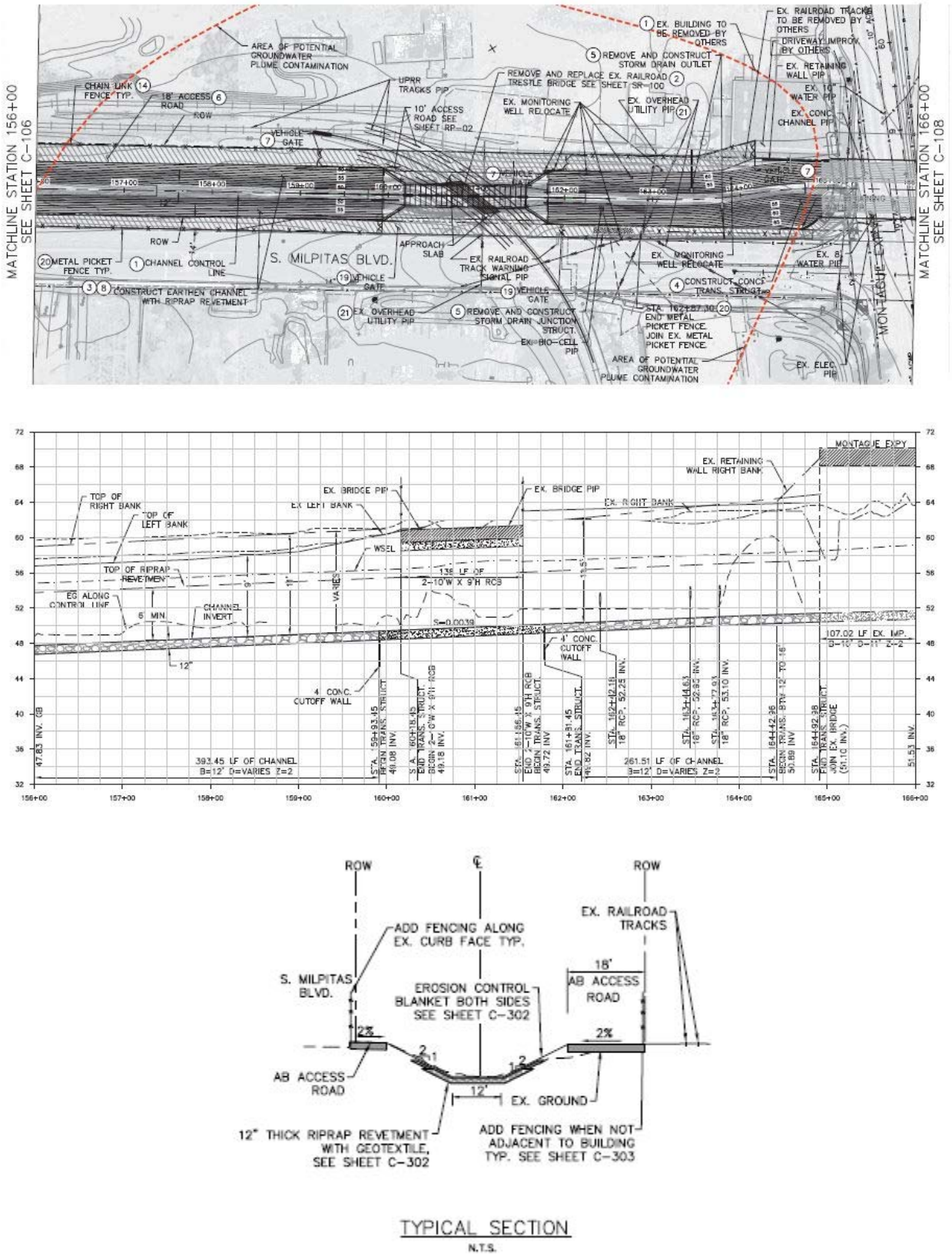

FIGURE 3. Proposed Project Construction Plans and Cross Section in the AOI

CONFORMED

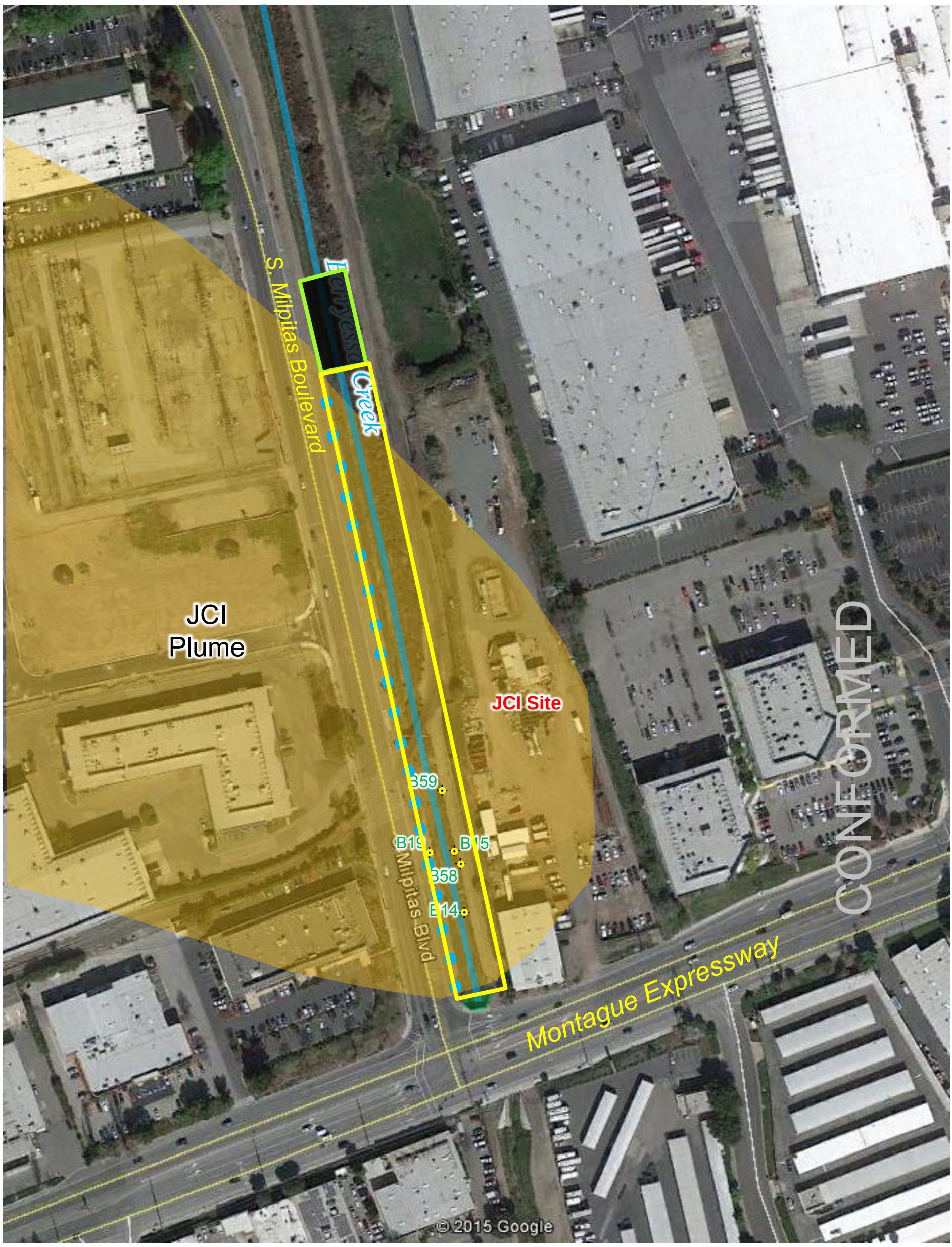

SOURCE: ***Google Earth Pro, February 23, 2014.***

Approximate location of shallow groundwater extraction well

B19 JCI shallow well (screened <40 feet bgs)

Approximate extent of JCI VOC Groundwater Plume

Area of Interest

Proposed Temporary Groundwater Treatment System Location

N

0 feet 150

TITLE: **Approximate Location of Shallow Groundwater Extraction Wells in AOI**

LOCATION: **Upper Berryessa Creek FRMP**
Between Montague Expressway and Yosemite Drive
Milpitas, California

TETRA TECH

CHECKED:	IA
DRAFTED:	KDH
FILE:	100-SWW-T31331
DATE:	10-15-15

FIGURE: **4**

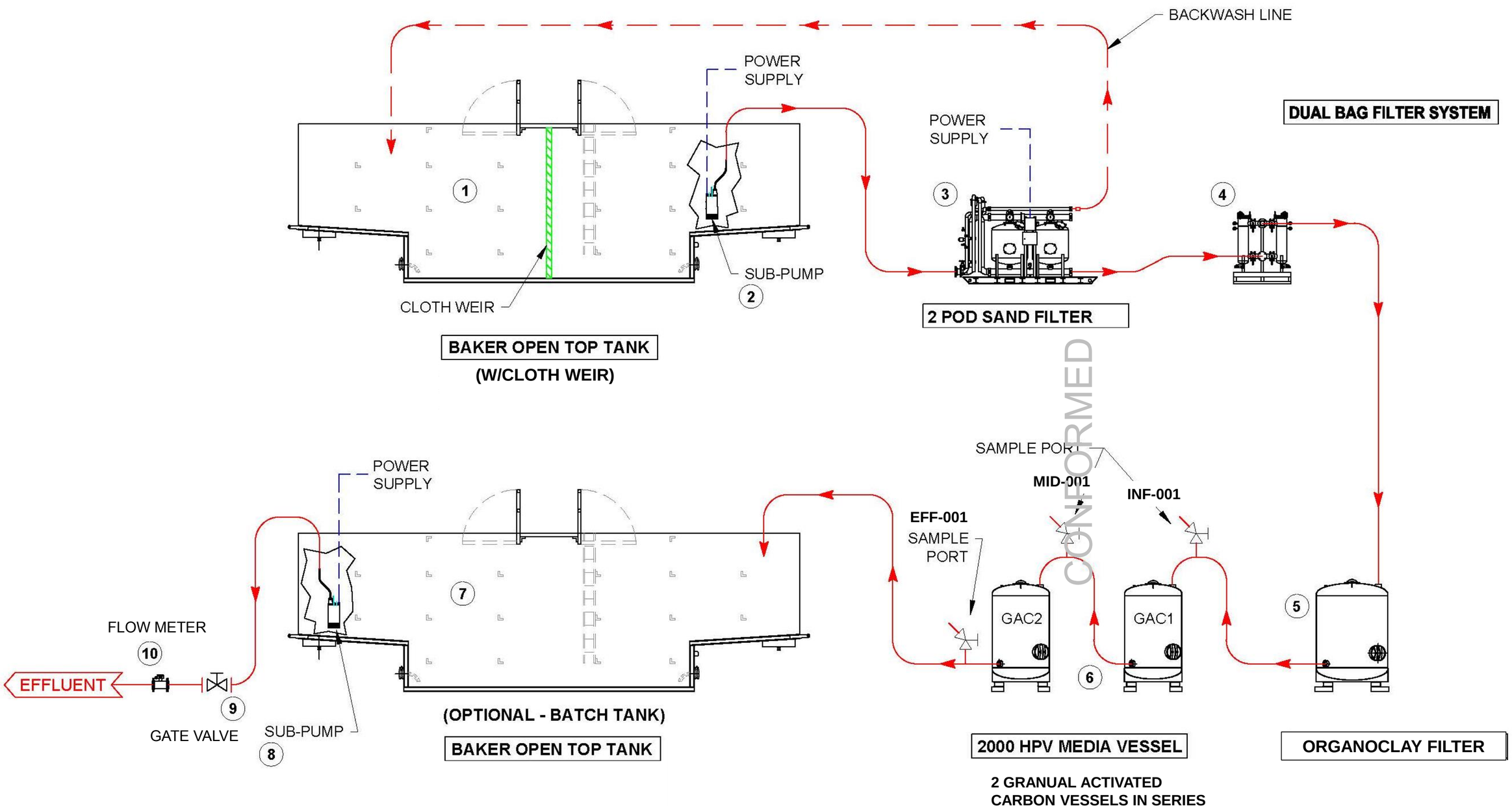

TITLE:	**Process Flow Schematic**
LOCATION:	**Upper Berryessa Creek FRMP** **Between Montague Expressway and Yosemite Drive** **Milpitas, California**

TETRA TECH

CHECKED:	SEP	FIGURE:
DRAFTED:	JAA	**5**
FILE:	100-SWW-T31331	
DATE:	10-30-15	

ATTACHMENTS

CONFORMED

Attachment A
SFBRWQCB Non-Enforcement Letter Dated August 14, 2015

CONFORMED

August 14, 2015
File No. 43S0065 (mej)

Amanda Cruz
San Francisco Planning Branch
US Army Corps of Engineers
1455 Market Street
San Francisco, CA
Amanda.B.Cruz@usace.army.mil

SUBJECT: Berryessa Creek Channel Modification Project, adjacent to the former JCI Jones Chemicals Facility, 985 Montague Expressway, Milpitas, Santa Clara County

Dear Ms. Cruz:

Thank you for meeting with Regional Water Board staff to discuss the upcoming creek channel modification project being conducted by the U.S. Army Corps. of Engineers and the Santa Clara Valley Water District. As we have discussed, the groundwater contaminant plume of volatile organic compounds (VOCs) originating from the former JCI Jones facility passes beneath passes beneath Berryessa Creek, immediately to the west of the former facility.

We understand that you will be working in the creek bed immediately adjacent to the former Jones site. As part of the construction, groundwater may be encountered. To manage groundwater that may be encountered during construction, a groundwater management plan will be developed that will include control and diversion of water, if necessary, using the most efficient means such as coffer dams, sump pumps, dewatering wells or other techniques. Any water that may be generated will be treated and discharged downstream or to a storm drain. The treatment standards for this discharge water will comply with those set forth in our NPDES General Permit (R2-2012-0012) for fuel and VOC impacted sites. However, you will not be obtaining an NPDES permit for this work. A copy of the groundwater management plan will be submitted to this agency for our review and comment.

Based on our understanding of the work outlined above and with the condition that the groundwater is treated to the standards described, we will not recommend enforcement for discharging without a permit.

The work in the creek bed will also include movement of soil/sediment as part of the construction activities. As discussed, there is no reason to believe shallow soil/sediment in the area adjacent to the former Jones facility is impacted. This being the case, no soil/sediment management plan is necessary for movement of the materials. In the case that impacted soil is encountered, it will be segregated and stockpiled for offsite disposal. We find this acceptable.

CONFORMED

If you have any questions, please contact Mark Johnson of my staff at (510) 622-2493 [e-mail mjohnson@waterboards.ca.gov].

Sincerely,

[Original digitally signed and furnished upon request;
does not transfer as PDF copy]

Bruce H. Wolfe
Executive Officer

cc: Ira Artz, Ira.Artz@tetratech.com
Susan Glendening, susan.glendening@waterboards.ca.gov
Tim Gaffney, JCI Jones Chemicals, Inc. tgaffney@jcichem.com
Chuck Pardini, Arcadis Chuck.Pardini@arcadis-us.com

CONFORMED

Attachment B
Photograph of Typical Temporary Groundwater Treatment Plant

CONFORMED

Attachment C
Typical Specifications for a 100 Gallon Per Minute Temporary Groundwater Treatment Plant

NOTE: All equipment brands depicted herein shall be considered as "typical" and are provided for reference purposes, with "or equivalent" applicable to all equipment.

CONFORMED

PRODUCT DATA SHEET

January, 2007

2" DUPLEX BAG FILTER SYSTEM

GENERAL INFORMATION

Two independent filter housings are skid-mounted and piped such that one filter unit is active while the other is out of service. Inlet and outlet connections are provided on each end of the skid. Use for filtering a wide range of industrial and commercial process fluids, groundwater discharge from construction sites, stormwater or urban runoff.

WEIGHTS AND MEASURES

» Capacity:	50 - 110 gpm per filter when clean (depends on filter media micron rating)
» Design Pressure:	150 psi
» Design Temp:	140°F max.*
» Height:	4'-9" (overall)
» Width :	4'-8"
» Length:	5'-8"
» Weight:	550 lbs. (approx.)

SKID DESIGN

» Outer Frame:	6 x 8.2 A36 carbon steel channel
» Inter. Frame:	2"x2 "x3/16" A36 carbon steel angle
» Filter Housing Pad:	15 x 33.9 A36 carbon steel channel
» Forklift Pockets:	Through front and rear framing channels
» Cover:	Expanded metal grating
» Lifting Eyes:	All four corners

*Practical limit for the PVC header piping. Unit could be used up to 225°F if carbon steel piping is used instead.

FILTER DESIGN

» Filter Housing	Rosedale model 8-30-2F-2-150-C-B-S-PB
» Top Cover:	Three eyenuts; hinged for easy access
» Piping:	2" schedule 80 PVC (inlet and outlet headers)
» Inlet & Outlet:	2" 150# ANSI flanges
» Cover Seal:	Buna N (Nitrile) o-ring
» Housing Material:	Carbon Steel
» Filter Basket:	30" deep, 6.7" diameter, 4.4 sq. ft. surface area, 1000 cu. in. volume, 9/64" dia holes (51% open)
» Filter Media:	Filter bags, size #2. Wide range of micron ratings is available, down to 1.0.
» Vent Valves:	1/4" ball valve on top cover
» Drain Valves:	1" ball valve on the bottom of each housing

SURFACE DETAILS

» Exterior Coating:	High gloss polyurethane

TESTS / CERTIFICATIONS

» Test Performed:	Scheduled QMS inspections

CONFORMED

BAKERCORP™

To the best of our knowledge the technical data contained herein are true and accurate at the date of issuance and are subject to change without prior notice. No guarantee of accuracy is given or implied because variations can and do exist. NO WARRANTY OR GUARANTEE OF ANY KIND IS MADE BY BAKERCORP, EITHER EXPRESSED OR IMPLIED.

3020 Old Ranch Parkway • Suite 220 • Seal Beach, CA • 562-430-6262

ITEM	DESCRIPTION
1	Rosedale Model 8302F2150CBS-PB Bag Filter, all welded construction, carbon steel wetted parts; Design Pressure: 150 psi; Design Temperature: 400°F; Filter Basket: 304 SS, 4.4 sq. ft. area, 9/64" dia. holes (51% open).
2	Expanded metal grating
3	Mounting skid with forklift pockets
4	1" bottom drain
5	2" PVC piping

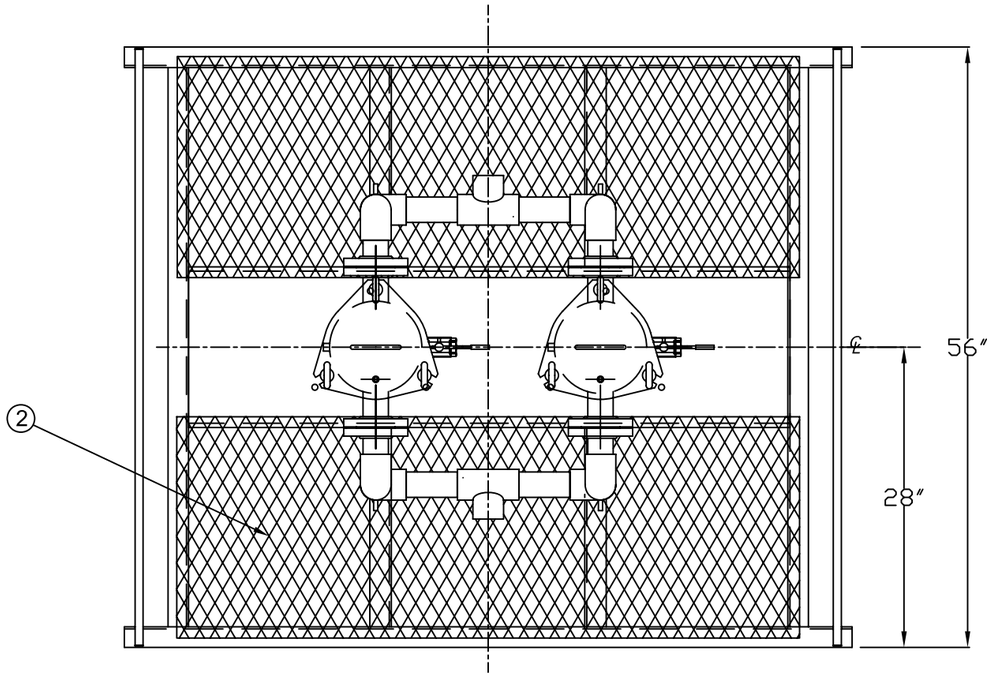

TOP VIEW

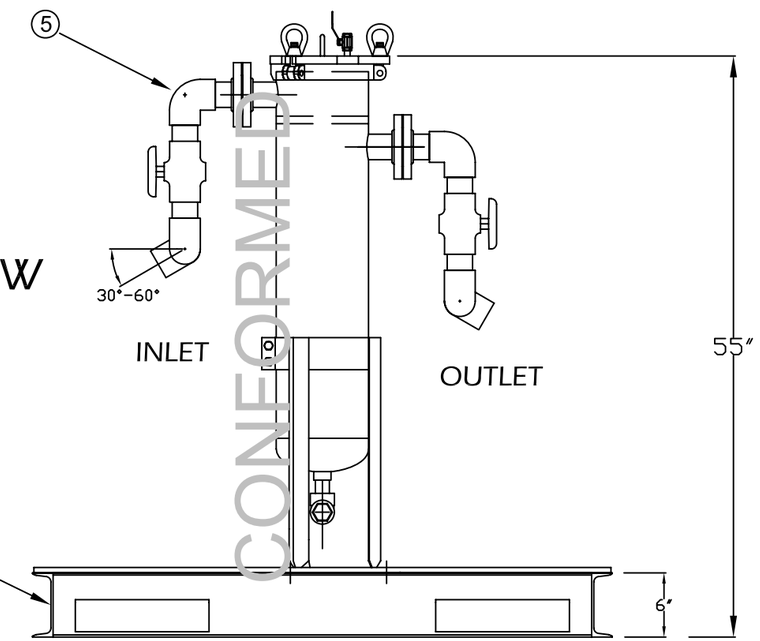

SIDE VIEW

CONFORMED

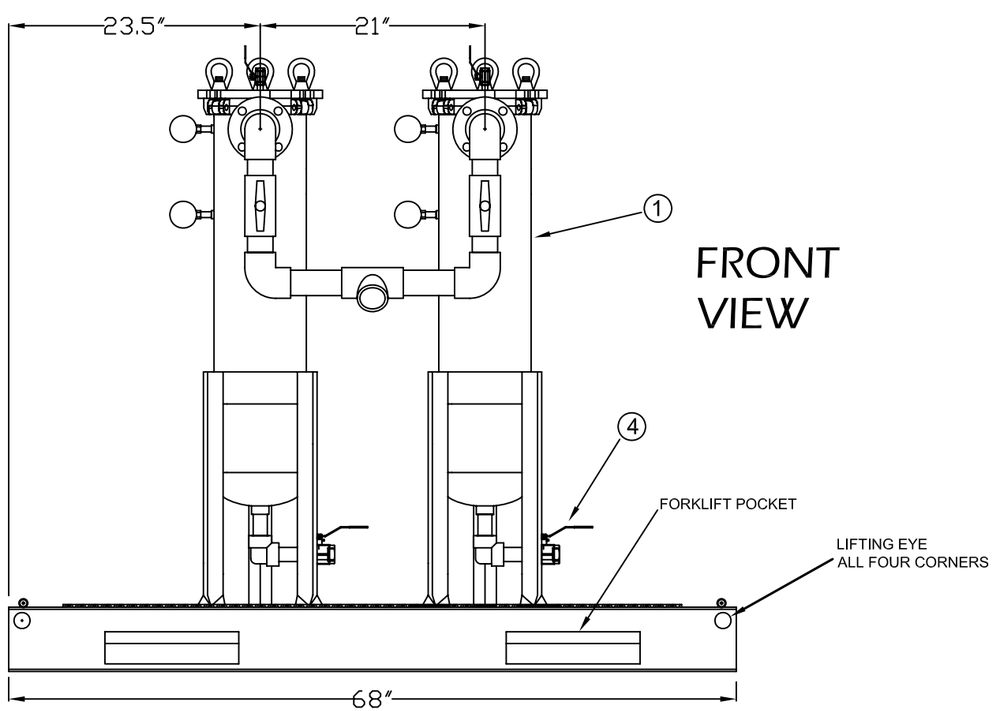

FRONT VIEW

The information contained herein is proprietary to BakerCorp and shall not be reproduced or disclosed in whole or in part, or used for anydesign or manufacture except when user obtains direct written authorization from BakerCorp.

BAKERCORP™
3020 OLD RANCH PARKWAY
SEAL BEACH, CA 90740-2751

REV.	DESCRIPTION	DATE	BY
G			
F			
E			
D			
C			
B			
A	Changed drawing title	2/18/05	PJB

SCALE: To Scale	SIZE B	ORIGINAL DWG. DATE 18AUG03
DRAWN BY: P.J.B.	APPROVED BY: –	CAT/CLASS ––
TITLE 2" BAG FILTER UNIT		SHEET 1 OF 1
DRAWING NO. S-9-M0010-1-		REV. A

OC Organoclay/Carbon Blend

BakerCorp's OC series filtration media is available for liquid phase applications and is a blend of "R 8x30" activated carbon and "Z-200" modified zeolite (often referred to as organoclay). This carbon/organoclay mixture is ideal for the filtration of oil and grease from contaminated water. This media also has some catalytic abilities to adsorb anions such as chromate, selenate, sulfate, hydrocarbons (such as Benzene, Toluene, and Xylene), heavy metals (such as lead and cadmium), and various petroleum products (such as oil) from aqueous waste streams.

ORGANOCLAY PHYSICAL PROPERTIES:

Cation Exchange Capacity:	2.20 meq/g
Bulk Density (lbs./cu.ft.):	58
Hardness (Mohs Scale):	5.1
Pore Size:	4.0 A
Specific Surface Area:	40 sq. m/g
Thermal Stability:	1,202 F
Crushing Strength:	2,500 lbs/sq inch
Blended Bulk Density (lbs./cu. Ft.)	44

These specifications represent general parameters and are subject to change. Please consult with BakerCorp before proceeding with your application.

CONFORMED

4306 W. 190th Street, Torrance, California 90504
Phone: 310.303.3700 ♦ Fax: 310.406.3001

PRODUCT DATA SHEET

January, 2007

KLEEN.WATER 1000HPV & 2000HPV

GENERAL INFORMATION

These units are designed for the efficient purification of contaminated water or liquid streams. These filters have the ability to remove contaminants to non-detectable levels. The vessels are constructed of heavy-duty mild steel and are lined with a double-layer epoxy coating.

WEIGHTS AND MEASURES

» Max. Flowrate:	*1000HPV:* 80 gpm *2000HPV:* 100 gpm
» Max. Pressure:	75 psi
» Max. Temp:	150°F
» Height:	*1000HPV:* 70″ *2000HPV:* 96″
» Diameter:	48″
» Shipping Wt*: (drum + media) (*Media dependent)	1000HPV: 2050 lbs. – 3050 lbs. 2000HPV: 3100 lbs. – 5100 lbs.

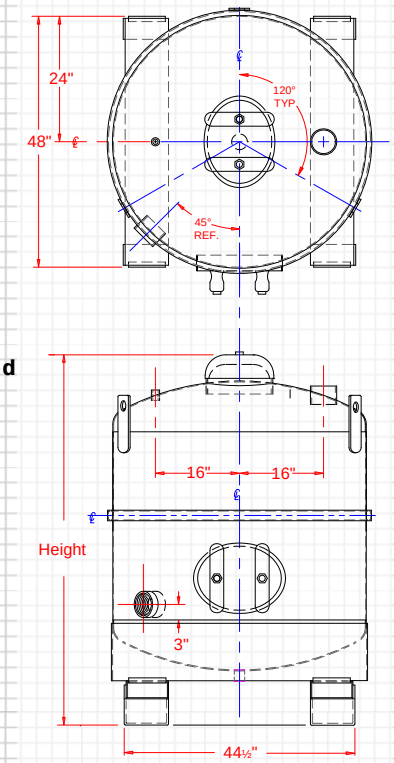

Downflow operation is recommended

FILTER MEDIA

» Types:	▪Activated Carbon ▪Organoclay ▪Ion Exchange Resin ▪Specialty Media
» Volume:	*1000HPV:* 34 cu. ft. *2000HPV:* 68 cu. ft.
» Weight*: (*Media dependent)	*1000HPV:* 1000 lbs. – 2000 lbs. *2000HPV:* 2000 lbs. – 4000 lbs.

MISCELLANEOUS

» Inlet:	4″ FNPT
» Outlet:	4″ FNPT
» Interior Coating:	Double-layered epoxy coating
» Internals:	PVC underdrain
» Media Access:	Top & side 12″x16″ manways (neoprene gaskets)

PRESSURE DROP DATA

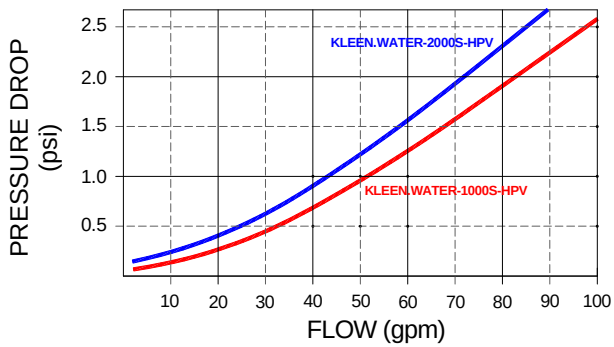

CONFORMED

NOTE:

1. Wet activated carbon preferentially removes oxygen from air. In closed or partially closed containers and vessels, oxygen depletion may reach hazardous levels. If workers are to enter a vessel containing carbon, appropriate procedures for potentially low oxygen spaces must be followed, including all federal and state requirements.

BAKERCORP™

To the best of our knowledge the technical data contained herein are true and accurate at the date of issuance and are subject to change without prior notice. No guarantee of accuracy is given or implied because variations can and do exist. NO WARRANTY OR GUARANTEE OF ANY KIND IS MADE BY BAKERCORP, EITHER EXPRESSED OR IMPLIED.

3020 Old Ranch Parkway • Suite 220 • Seal Beach, CA • 562-430-6262

TSURUMI PUMP

LB - SERIES

SEMI-VORTEX - DEWATERING PUMP

SPECIFICATIONS

FEATURES

1. Semi-vortex Urethane Rubber or high chrome cast iron impeller solids and allows for pumping of sand and stringy material.

2. Highly efficient, continuous duty air filled, copper wound motor with class E, insulation minimizes the cost of operation.

3. Built in thermal protection prevents motor failure due to overloading, accidental run-dry and single phasing in three phase units.

4. Double inside mechanical seals with silicon carbide faces running in an oil filled chamber provide for one the most durable seal designs available.

5. Double shielded, permanently lubricated, high temperature C3 ball bearings rated for a B-10 life of 60,000 hours provide for extended operational life.

6. Model LB-480A & LB-800A Automatic Submersible pump performs like the non-automatic version in every aspect of construction site usage requiring a tough and durable pump

7. Slime design allows pumps fit Into 8” pipes. (Manual type only)

APPLICATIONS

1. Residential, commercial, industrial wastewater and site drainage.

2. Decorative waterfalls and fountains.

3. Raw water supply from lakes or rivers.

4. Sediment removal from small sumps or basins.

Intertek

OIL LIFTER EQUIPPED

CONFORMED

SPECIFICATIONS

Discharge Size	2 - 3 "Npt (50 - 80 mm)
Horsepower Range	1/2 - 2Hp. (0.40 - 1.5kW)
Performance Range Capacity	15.9 - 111.0 GPM. (0.06 - 0.42 m^3/min)
Head	13.1 Ft. - 68.9 Ft. (4.0 - 18.9 m)
Maximum water temperature	104^0 F. (40^0 C.)
Materials of Construction	
Casing	Butadiene Rubber + Natural Rubber + Steel [LB(T)-1500]
Impeller	Urethane Rubber , High Chrome Cast Iron [LB(T)-1500]
Shaft	403 Stainless Steel
Motor Frame	Aluminum alloy
Fasteners	304 Stainless Steel
Mechanical Seal	Silicon Carbide
Elastomers	NBR (Nitrile Butadiene Rubber)
Impeller Type	Semi-vortex, solids handling.
Solids Handling Capability	0.236” (6.0mm)
Bearings	Prelubricated, Double Shielded
Motor Nomenclature	
Type, Speed, Hz.	Air Filled, 3600 Rpm, 60 Hz.
Voltage, Phase	115 / 230V., 1 Phase 230 / 460 / 575V., 3 Phase
Insulation	Class E, B
Accessories	Submersible Power Cable 32 - 50' (10 - 15m)
Operational Mode	Manual , Automatic(LB-480A / 800A)

OPTIONS

Length as Required,

TS-301 Float Switch

TSURUMI PUMP

LB - SERIES
SEMI-VORTEX - DEWATERING PUMP

PERFORMANCE CURVE

MODEL	BORE	HP	KW	RPM	SOLIDS DIA	LIQUID	SG.	VISCOSITY	TEMP.
LB(Z)-800(A)-61	2"/50mm	1	0.75	3300	0.236"/6mm	Water	1.0	1.123 cSt.	60°F

PUMP TYPE	PHASE	VOLTAGE	AMPERAGE	HZ	STARTING METHOD	INS. CLASS
Semi-Vortex - Dewatering Pump	Single	115-120 / 230	9.6-9.2 / 5.1	60	Capacitor Start	E

CURVE No.	DATE	PHASE	VOLTAGE	AMPERAGE	HZ	STARTING METHOD	INS. CLASS
-	-	-	-	-	-	-	-

REMARKS:

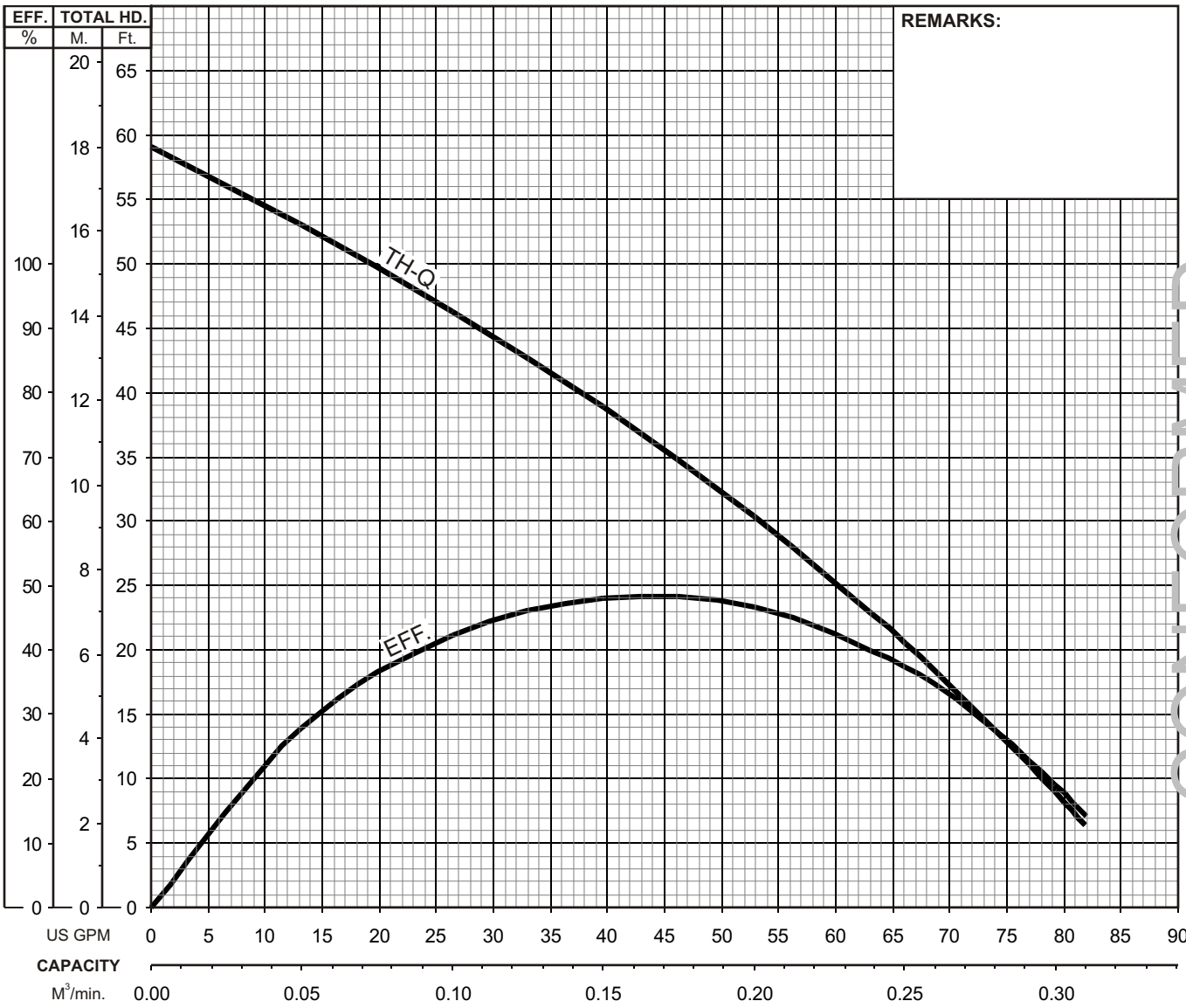

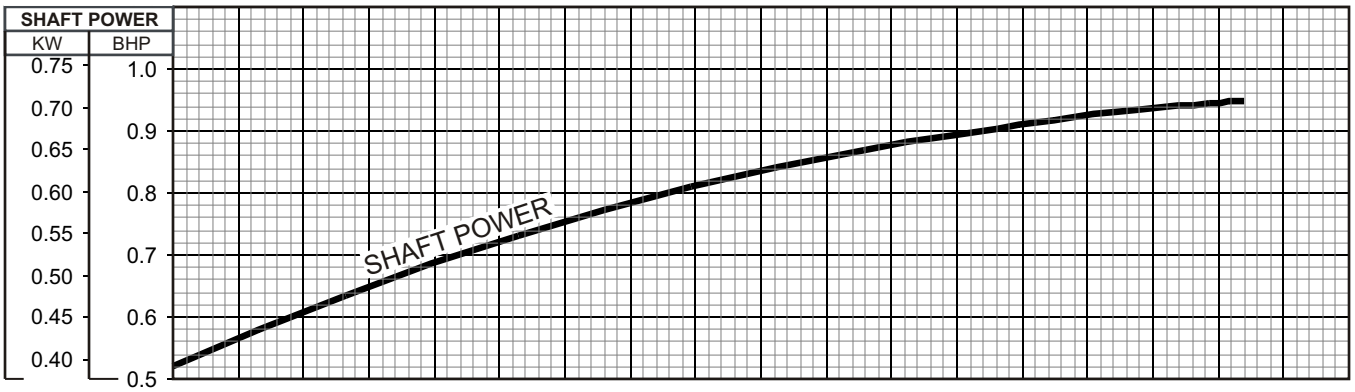

CONFORMED

TSURUMI PUMP

LB - SERIES
SEMI-VORTEX - DEWATERING PUMP

DIMENSIONS

LB-800-61
LBT-800-61

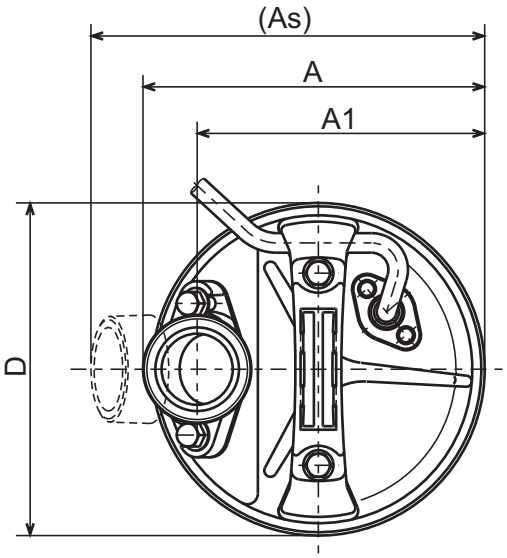

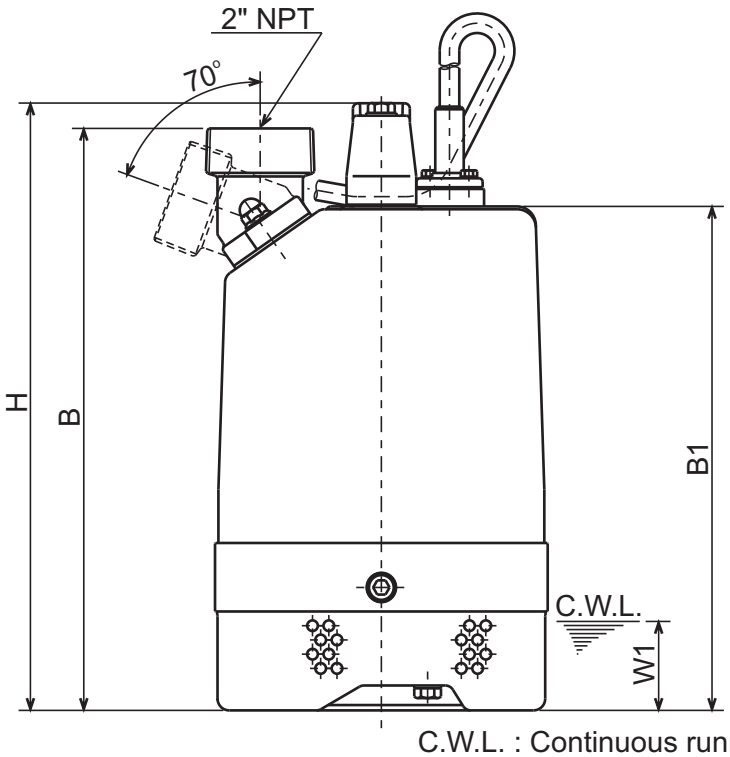

C.W.L. : Continuous running Water Level

DIMENSIONS:USCS (Inch)

Model	HP	NOM. SIZE	Pump & Motor							C.W.L.	Wt.
			A	As	A1	B	B1	D	H	W1	(lbs.)
LB-800-61	1	2"	7 9/16	8 11/16	6 3/8	12 7/8	11 1/8	7 3/8	13 7/16	2	29
LBT-800-61	1	2"	7 9/16	8 11/16	6 3/8	12 7/8	11 1/8	7 3/8	13 7/16	2	28

DIMENSIONS:METRIC (mm)

Model	kW	NOM. SIZE	Pump & Motor							C.W.L.	Wt.
			A	As	A1	B	B1	D	H	W1	(kg)
LB-800-61	0.75	50	192	221	162	327	283	187	341	50	13.2
LBT-800-61	0.75	50	192	221	162	327	283	187	341	50	12.8

CONFORMED

TSURUMI PUMP

LB - SERIES
SEMI-VORTEX - DEWATERING PUMP

PERFORMANCE CURVE

MODEL	BORE	HP	KW	RPM	SOLIDS DIA	LIQUID	SG.	VISCOSITY	TEMP.
LB-1500-60	3"/80mm	2	1.5	3480	0.236"/6mm	Water	1.0	1.123 cSt.	60°F

PUMP TYPE	PHASE	VOLTAGE	AMPERAGE	HZ	STARTING METHOD	INS. CLASS
Semi-Vortex Dewatering Pump	Single	110/115/120, 230	27.1/26.2/27.0, 13.2	60	Capacitor Start	B

CURVE No.	DATE	PHASE	VOLTAGE	AMPERAGE	HZ	STARTING METHOD	INS. CLASS
-	-	-	-	-	-	-	-

REMARKS:

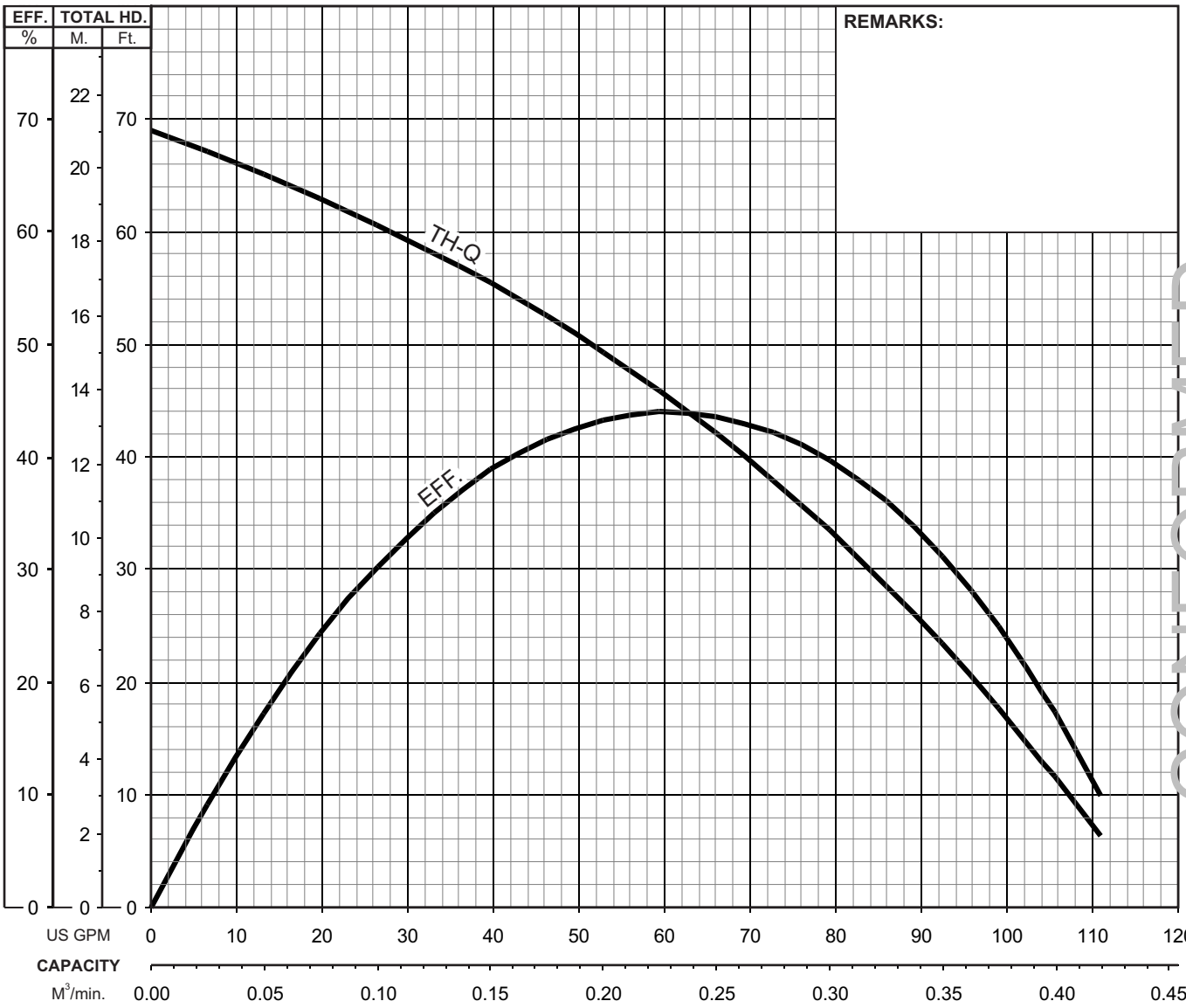

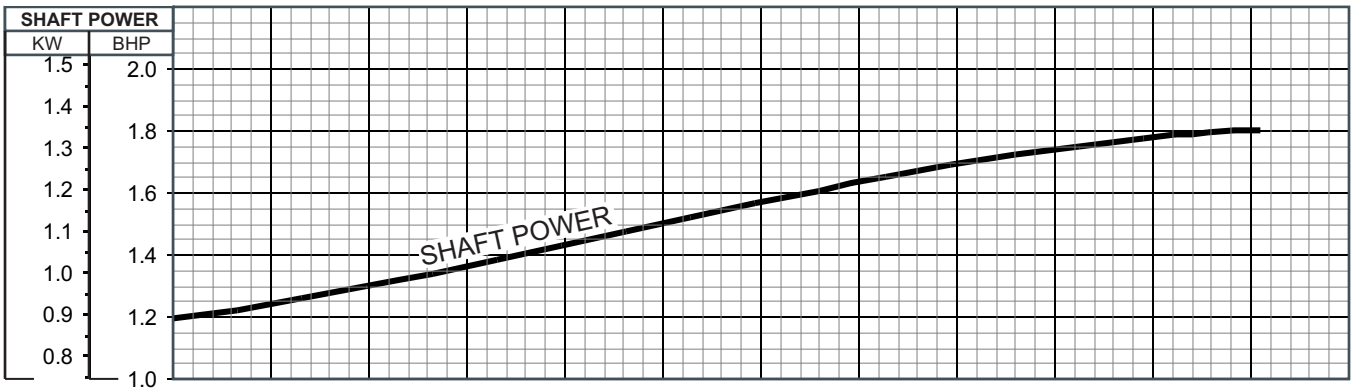

CONFORMED

TSURUMI PUMP

LB - SERIES
SEMI-VORTEX - DEWATERING PUMP

DIMENSIONS

LB-1500-60
LBT-1500-60

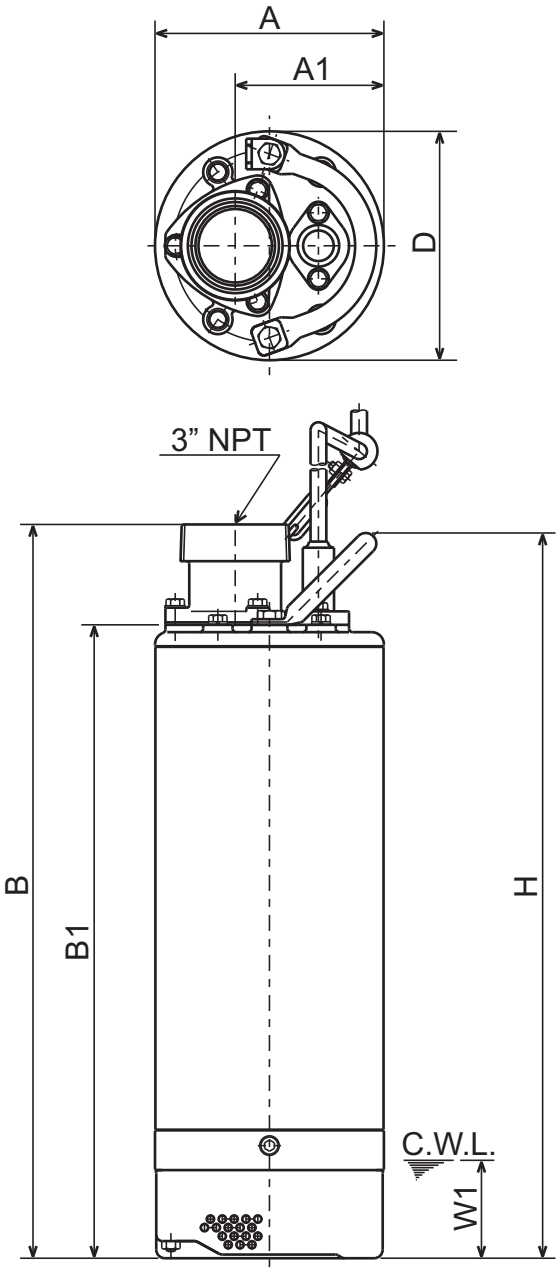

C.W.L. : Continuous running Water Level

DIMENSIONS:USCS (Inch)

Model	HP	NOM. SIZE	Pump & Motor						C.W.L.	Wt.
			A	A1	B	B1	D	H	W1	(lbs.)
LB-1500-60	2	3"	7 3/8	4 13/16	23 5/8	20 3/8	7 3/8	23 5/16	3 1/8	72
LBT-1500-60	2	3"	7 3/8	4 13/16	23 5/8	20 3/8	7 3/8	23 5/16	3 1/8	70

DIMENSIONS:METRIC (mm)

Model	kW	NOM. SIZE	Pump & Motor						C.W.L.	Wt.
			A	A1	B	B1	D	H	W1	(kg)
LB-1500-60	1.5	80	187	122	600	518	187	593	80	32.5
LBT-1500-60	1.5	80	187	122	600	518	187	593	80	32.0

CONFORMED

TSURUMI PUMP

HS - SERIES

SEMI-VORTEX - WASTEWATER PUMP - WITH AGITATOR

SPECIFICATIONS

FEATURES

1. Semi-vortex Urethane Rubber impeller with agitator suspends solids and allows for pumping of sand and stringy material.

2. Highly efficient, continuous duty air filled, copper wound motor with class E, insulation minimizes the cost of operation.

3. Built in thermal protection prevents motor failure due to overloading, accidental run-dry and single phasing in three phase units.

4. Double inside mechanical seals with silicon carbide faces running in an oil filled chamber provide for one the most durable seal designs available.

5. Double shielded, permanently lubricated, high temperature C3 ball bearings rated for a B-10 life of 60,000 hours provide for extended operational life.

HSZ : HS series dewatering pump is available in an automatic Type with simple float switch.

HSD : Single Phase compact pump fit for use in slurry dewatering in foundation works.

APPLICATIONS

1. Residential, commercial, industrial wastewater and site drainage.

2. Decorative waterfalls and fountains.

3. Raw water supply from lakes or rivers.

4. Sediment removal from small sumps or basins.

Intertek

OIL LIFTER EQUIPPED

CONFORMED

SPECIFICATIONS

Discharge Size	2 - 3 "Npt (50 - 80 mm)
Horsepower Range	1/2 - 1Hp. (0.40 - 0.75kW)
Performance Range Capacity	13.2 - 61.0 GPM. (0.05 - 0.23 m^3/min)
Head	13.1 Ft. - 62.0 Ft. (4.0 - 18.9 m)
Maximum water temperature	104^0 F. (40^0 C.)
Materials of Construction	
Casing	Cast Iron , Ductile Cast Iron(HSD)
Impeller	Urethane Rubber , High Chrome Cast Iron(HSD)
Shaft	403 Stainless Steel
Motor Frame	Aluminum alloy
Fasteners	304 Stainless Steel
Mechanical Seal	Silicon Carbide
Elastomers	NBR (Nitrile Butadiene Rubber)
Impeller Type	Semi-vortex, solids handling.
Solids Handling Capability	0.276 - 0.393" (7.0 - 10.0mm)
Bearings	Prelubricated, Double Shielded
Motor Nomenclature	
Type, Speed, Hz.	Air Filled, 3600 Rpm, 60 Hz.
Voltage, Phase	115 / 230V., 1 Phase
Insulation	Class E
Accessories	Submersible Power Cable 20 - 32' (6.2 - 10m)
Operational Mode	Manual , Automatic(HSZ)

OPTIONS

Length as Required,

TS-301 Float Switch

TSURUMI PUMP

HS - SERIES
SEMI-VORTEX - WASTEWATER PUMP

PERFORMANCE CURVE

MODEL	BORE	HP	KW	RPM	SOLIDS DIA	LIQUID	SG.	VISCOSITY	TEMP.
HS(Z)3.75S-61	3"/80mm	1	0.75	3408	0.276"/7.0mm	Water	1.0	1.123 cSt.	60°F

PUMP TYPE	PHASE	VOLTAGE	AMPERAGE	HZ	STARTING METHOD	INS. CLASS
Semi-Vortex - Wastewater Pump	Single	110/115/120, 230	10.0 / 9.6 / 9.4 , 4.6	60	Capacitor Start	E

CURVE No.	DATE	PHASE	VOLTAGE	AMPERAGE	HZ	STARTING METHOD	INS. CLASS
-	-	-	-	-	-	-	-

REMARKS:

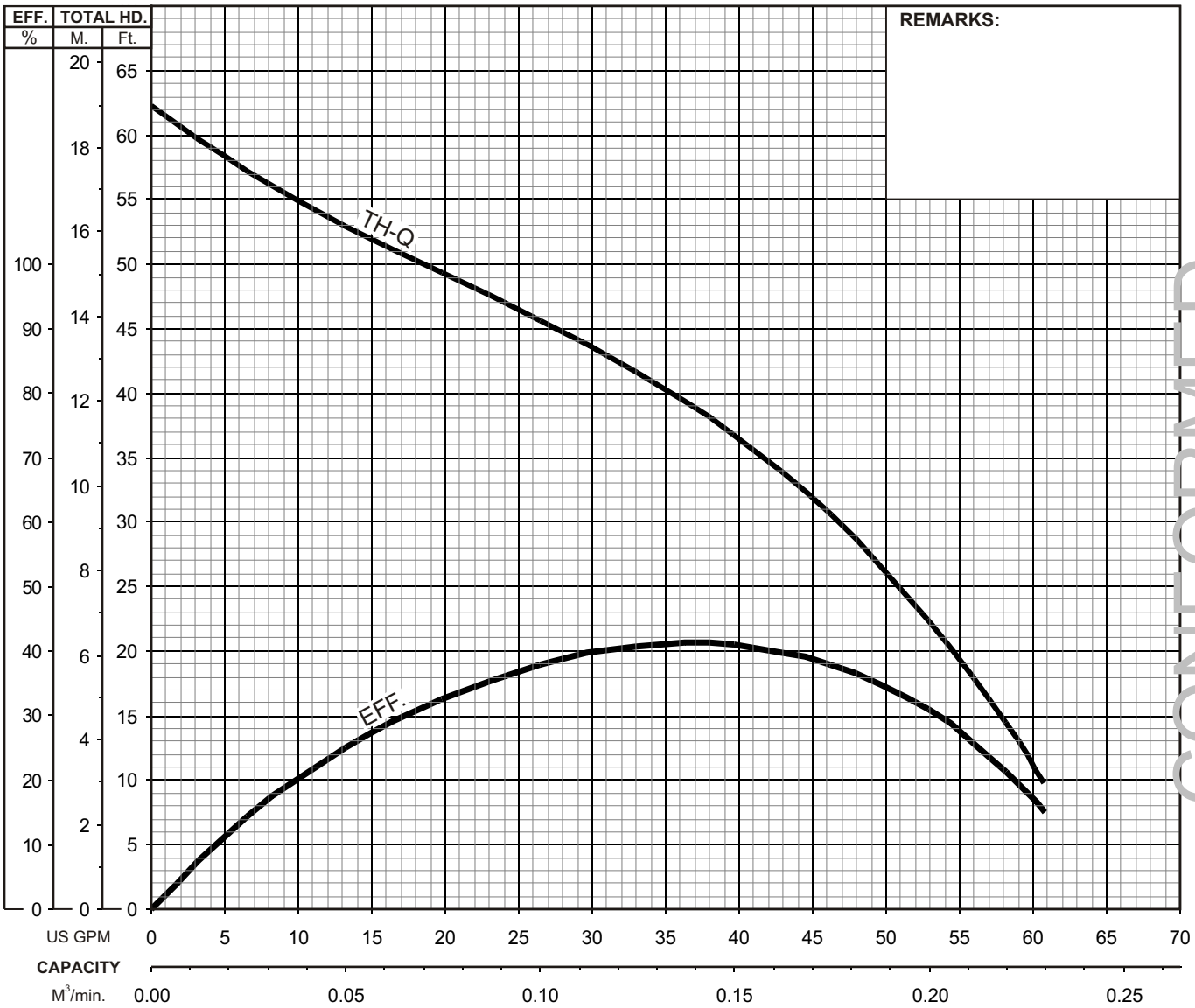

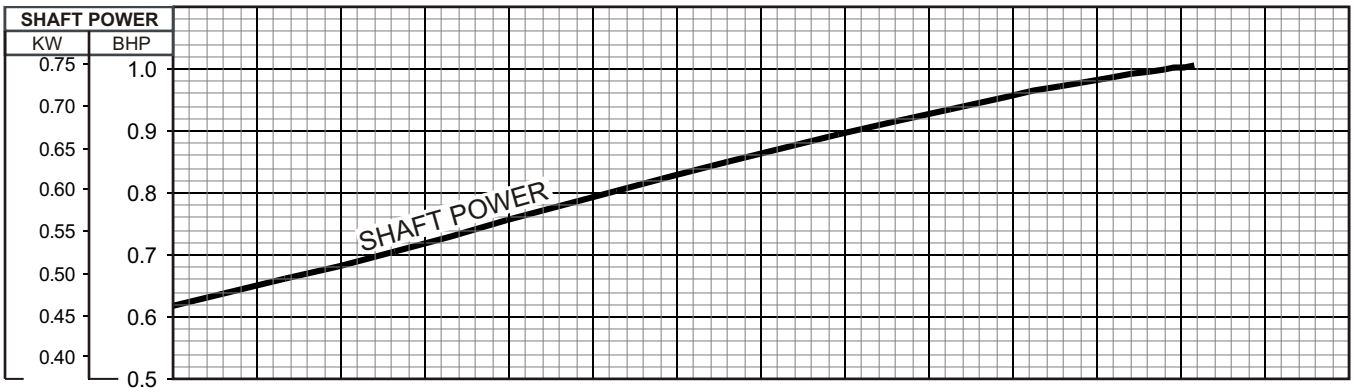

CONFORMED

TSURUMI PUMP

HS - SERIES
SEMI-VORTEX - WASTEWATER PUMP

DIMENSIONS

HS2.75S-61
HS3.75S-61

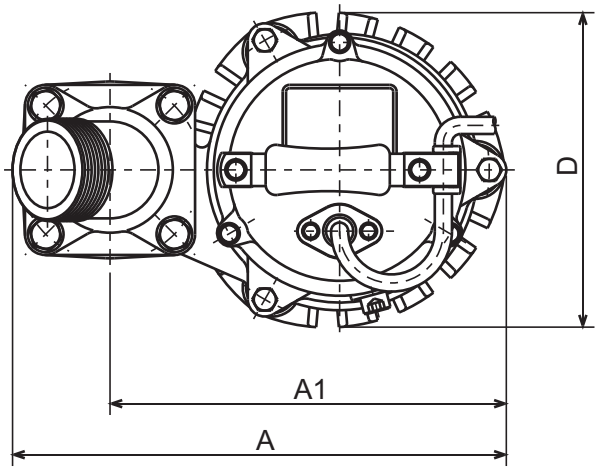

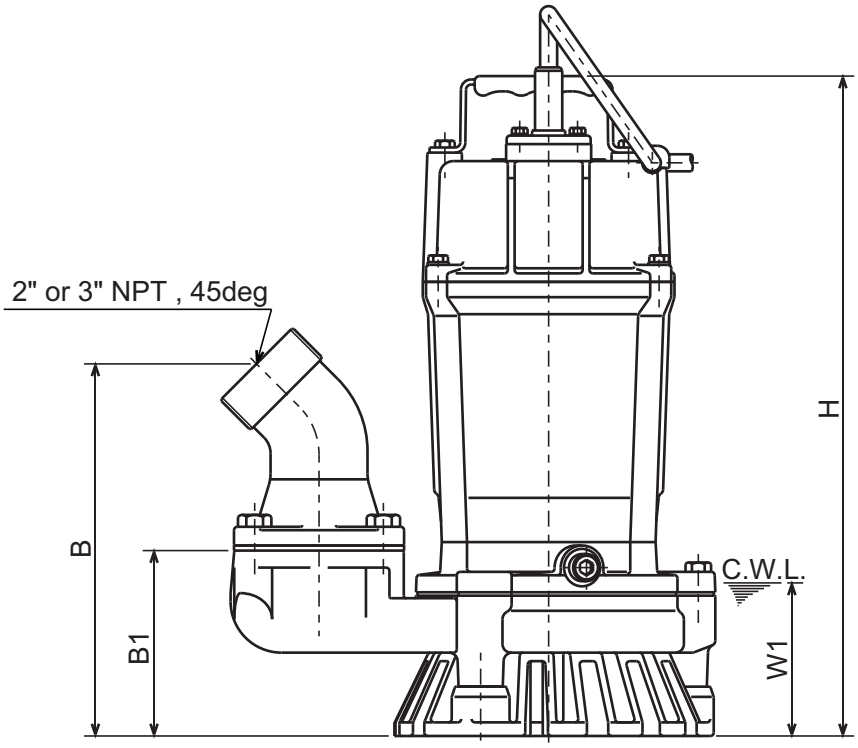

C.W.L. : Continuous running Water Level

DIMENSIONS:USCS (Inch)

Model	HP	NOM. SIZE	Pump & Motor						C.W.L.	Wt. (lbs.)
			A	A1	B	B1	D	H	W1	
HS2.75S-61	1	2"	11 7/16	9 3/16	8 5/8	4 5/16	7 5/16	15 1/4	3 1/2	40
HS3.75S-61	1	3"	12 7/16	9 3/16	9 1/2	4 5/16	7 5/16	15 1/4	3 1/2	42

DIMENSIONS:METRIC (mm)

Model	kW	NOM. SIZE	Pump & Motor						C.W.L.	Wt. (kg)
			A	A1	B	B1	D	H	W1	
HS2.75S-61	0.75	50	290	233	219	109	185	388	90	18.2
HS3.75S-61	0.75	80	317	233	241	109	185	388	90	19.0

CONFORMED

TSURUMI PUMP

NK - SERIES
SEMI-VORTEX - DEWATERING PUMP

SPECIFICATIONS

FEATURES

1. Double inside mechanical seals with silicon carbide faces, running in an oil filled chamber and further protected by a lip seal running against a replaceable, stainless steel shaft sleeve, provides for the most durable seal design available.

2. Highly efficient, continuous duty air filled, copper wound motor with class B, insulation minimizes the cost of operation.

3. Built in thermal & amperage sensing, protector prevents motor failure due to overloading or accidental run dry conditions.

4. Double shielded, permanently lubricated, high temperature C3 ball bearings rated for a B-10 life of 60,000 hours, extend operational life.

5. Top discharge, flow-thru design enables operation at low water levels for extended periods.

Sand Kit : NK2-15SK / NK2-22SK
The Sand Kit can be added to the NK series to suspend sand and prevent sand lock.

APPLICATIONS

1. Residential, commercial, industrial wastewater and construction site drainage.

2. Effluent transfer.

3. Decorative waterfalls and fountains.

4. Raw water supply from rivers or lakes..

OIL LIFTER EQUIPPED

Intertek

CONFORMED

SPECIFICATIONS	STANDARD	OPTIONS
Discharge Size	3" Npt (80 mm)	
Horsepower Range	2 ~ 3 Hp. (1.5 ~ 2.2 kW)	
Performance Range Capacity	55.5 ~ 211.0 GPM. (0.21 ~ 0.80 m^3/min)	
Head	34.4 ~ 85.0 Ft. (10.50 ~ 25.91 m)	
Maximum water temperature	104^0 F. (40.0^0 C.)	
Materials of Construction		
Casing	Butadiene Rubber + Natural Rubber , Cast Iron (NK2-22L)	
Impeller	Ductile Cast Iron , High Chrome Cast Iron (NK2-22L , NK2-15SK/22SK)	
Shaft	420 , 403 Stainless Steel	
Motor Frame	Aluminum alloy	
Fasteners	304 Stainless Steel	
Mechanical Seal	Silicon Carbide	
Elastomers	NBR (Nitril Butadiene Rubber)	
Impeller Type	Semi-vortex, solids handling.	
Solids Handling Capability	0.334” (8.5mm)	
Bearings	Prelubricated, Double Shielded	
Motor Nomenclature		
Type, Speed, Hz.	Air Filled, 3600 Rpm, 60 Hz.	
Voltage, Phase	110/220 V., 1 Ph (NK2-15 Dual Voltage)	
Insulation	Class B	
Accessories	Submersible Power Cable 32' (10.0 m)	Length as Required
Operational Mode	Manual	TS-301 Float Switch

TSURUMI PUMP

NK - SERIES
SEMI-VORTEX - DEWATERING PUMPS

PERFORMANCE CURVE

MODEL	BORE	HP	KW	RPM	SOLIDS DIA	LIQUID	SG.	VISCOSITY	TEMP.
NK2-22L	3"/80mm	3	2.2	3465	0.334"/8.5mm	Water	1.0	1.123 cSt.	60°F

PUMP TYPE	PHASE	VOLTAGE	AMPERAGE	HZ	STARTING METHOD	INS. CLASS
Semi-Vortex - Dewatering Pump	Single	220	13.0	60	Capacitor Start	B

CURVE No.	DATE	PHASE	VOLTAGE	AMPERAGE	HZ	STARTING METHOD	INS. CLASS
-	-	-	-	-	-	-	-

REMARKS:

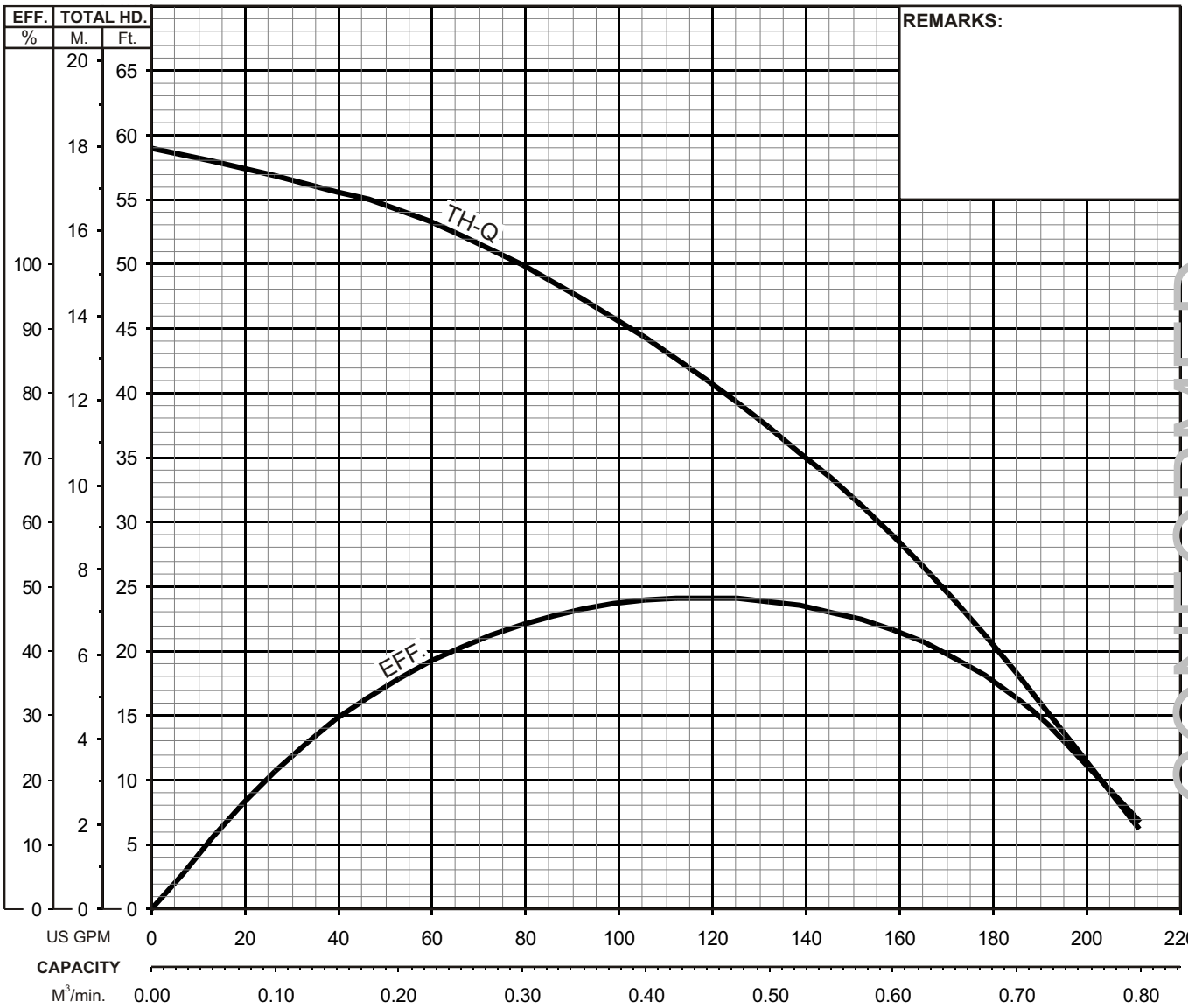

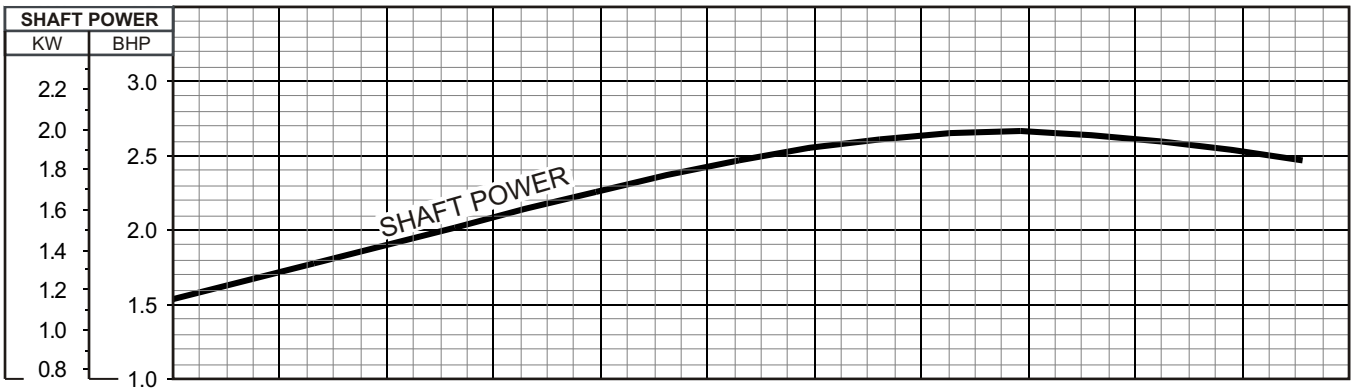

CONFORMED

TSURUMI PUMP

NK - SERIES
SEMI-VORTEX - DEWATERING PUMPS

DIMENSIONS

NK2-22L

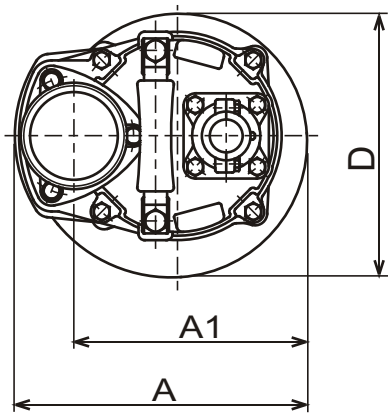

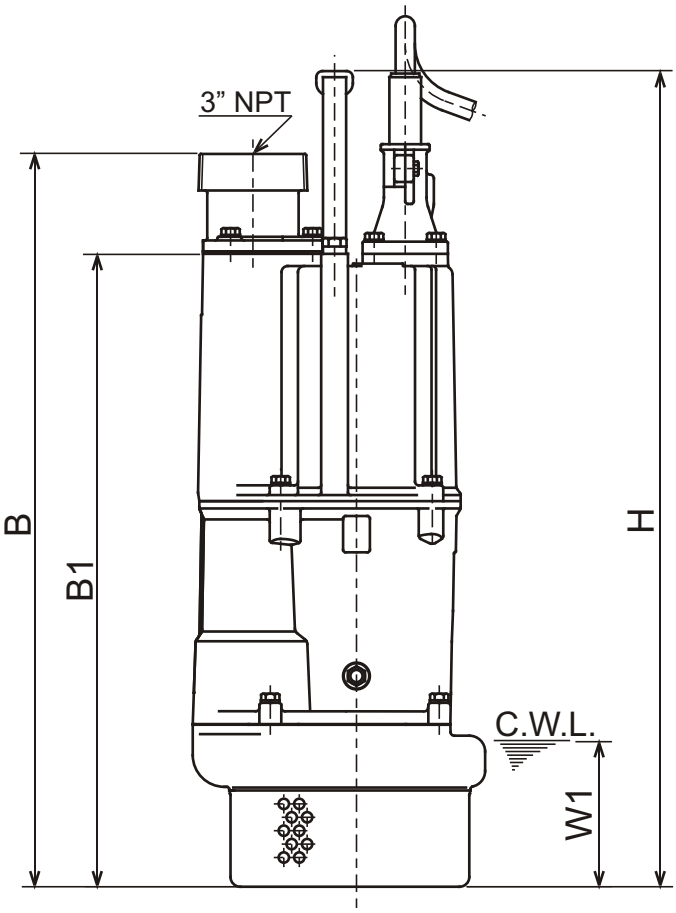

C.W.L. : Continuous running Water Level

DIMENSIONS:USCS (Inch)

Model	HP	NOM. SIZE	Pump & Motor						C.W.L.	Wt.
			A	A1	B	B1	D	H	W1	(lbs.)
NK2-22L	3	3"	9 1/4	7 1/2	23 5/8	20 3/8	8 1/2	26 1/2	4 3/4	73

DIMENSIONS:METRIC (mm)

Model	kW	NOM. SIZE	Pump & Motor						C.W.L.	Wt.
			A	A1	B	B1	D	H	W1	(kg)
NK2-22L	2.2	80	235	192	601	519	216	669	120	33.0

CONFORMED

PRODUCT DATA SHEET
January, 2007

EZ CLEAN TANK

GENERAL INFORMATION

Vapor tight steel tank with two sealed top access hatches and pressure/vacuum relief valve. Smooth interior walls for easy cleaning.

WEIGHTS AND MEASURES

» Capacity:	500 BBL (21,000 gal.)
» Height:	12′-4″
» Width :	8′-0″
» Length:	37′-6″ (40′-0″ incl. stairway)
» Weight:	26,000 lbs.

STRUCTURAL DESIGN

» Floor:	¼" thick ASTM A36 carbon steel, "V" shaped bottom
» Sides/Ends:	¼″ thick ASTM A36 carbon steel
» Roof Deck:	¼″ thick ASTM A36 carbon steel
» Wall Frame:	4″x4″ steel tubing (on exterior of wall surfaces)
» Floor Frame:	4″x4″ steel tubing (on exterior of floor surface)
» Roof Frame:	4″x4″ steel tubing (on exterior of roof surface)
» Internal Cross Bracing:	(3) - 2" sch. 80 pipes
» Skid Rails:	4″ x 4″ steel tubing

FEATURES

» Valves:	Typically 1-4″ butterfly valve on front end and1-6″ butterfly valve on rear end
» Relief Valve:	16 oz./in^2 pressure setting, 0.4 oz./in^2 vacuum setting; Buna-N seal
» Roof Piping Connection:	1-4″ 150# flanged (blinded) connection, driver side on rear end
» Misc. Pipe Connections:	Typically 1-4″ nipple with cap on front end below poop deck and 1-2″ collar with plug on top deck

FEATURES – cont.

» Top Access Hatches:	2-30″x45″ hinged vapor-proof hatches
» Hatch and Manway Seals:	Neoprene gasket
» End Manway:	1-20″ diameter end hatch (front end)
» Exterior Stairway:	Rear end of tank – lower section folds for extension and retraction
» Guardrails:	Around top deck; fold-down
» Internal Ladder:	Nearest manhole to stairway
» Bottom Sump:	One on each end of tank, either flat bottomed, 12″ diameter, 3″ deep, or domed, 14″ diameter, 4″ deep
» Level Gauge:	Ball float style, 2-8″ 304 SS floats
» Rear Wheels:	Removable dolly (not a fixed axle)

SURFACE DETAILS

» Exterior Coating:	High Gloss Polyurethane
» Interior Coating:	Chemical resistant coating (SS float balls are not coated)
» Safety Paint:	Safety yellow on all moveable safety equipment, handrails, stairs etc.

TESTS/CERTIFICATIONS

» Test Performed:	Major repairs – hydrotest Scheduled- Level I, II and III inspections, including NESHAP testing

CONFORMED

BAKERCORP™

To the best of our knowledge the technical data contained herein are true and accurate at the date of issuance and are subject to change without prior notice. No guarantee of accuracy is given or implied because variations can and do exist. NO WARRANTY OR GUARANTEE OF ANY KIND IS MADE BY BAKERCORP, EITHER EXPRESSED OR IMPLIED.

3020 OLD RANCH PARKWAY • SUITE 220 • SEAL BEACH, CA • 562-430-6262

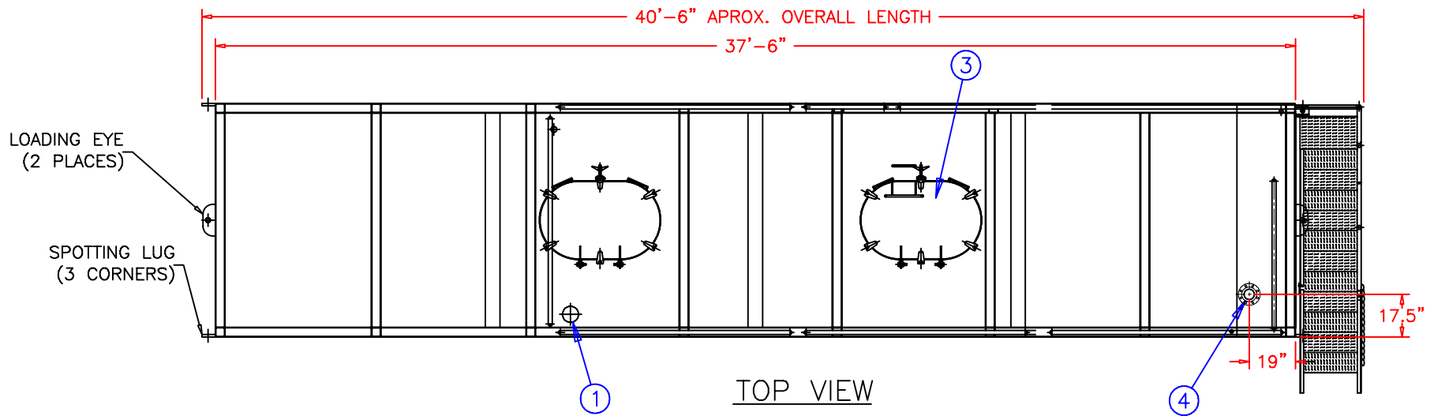

TOP VIEW

ITEM	QTY	DESCRIPTION
1	1	PRESSURE/VACUUM RELIEF VALVE
2	2	4" BUTTERFLY VALVE (SEE NOTE 1)
3	2	HINGED VAPOR PROOF HATCH
4	2	6" FLANGE WITH BLIND FLANGE (SEE NOTE 1)
5	1	LEVEL POINTER
6	1	OSHA COMPLIANT STAIRWAY & RAILS
7	1	OSHA COMPLIANT GUARD RAILS
8	1	20" END HATCH
9	1	4" x 4" STRUCTURAL TUBING FRAME, TYPICAL
10	1	INTERNAL LADDER

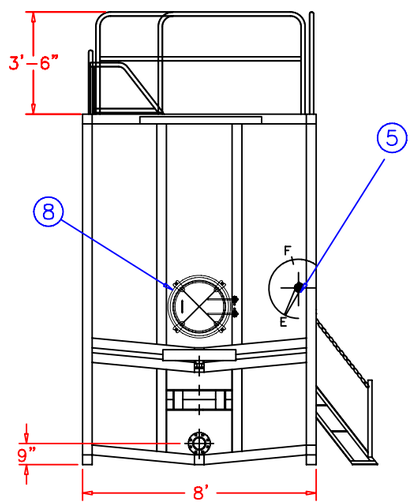

TRACTOR END

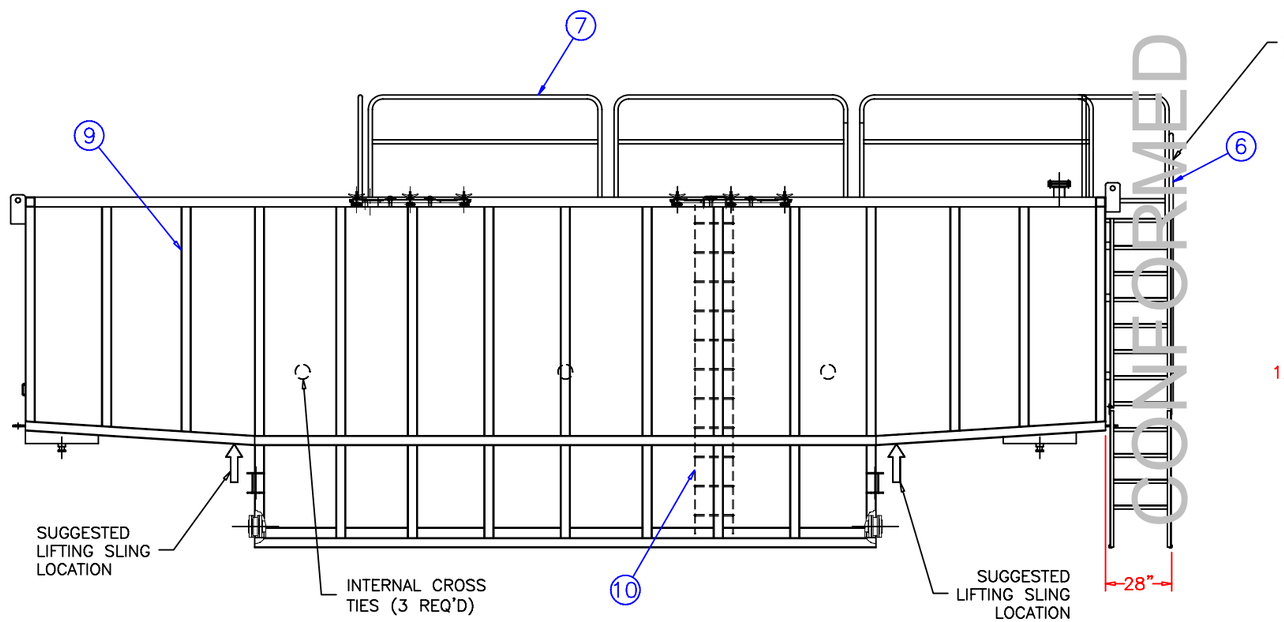

SIDE VIEW

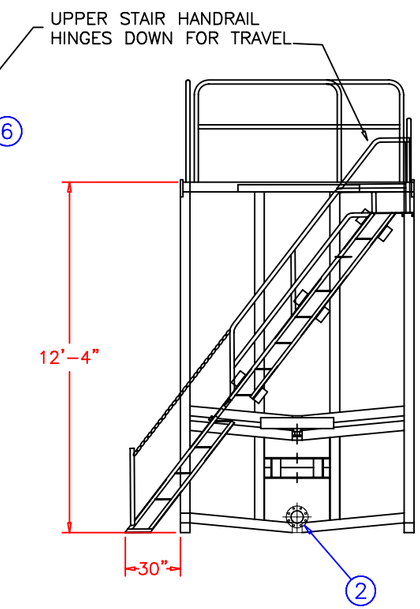

DOLLY END

SPECIFICATIONS:

1) Tank Capacity: 21,000 gallons (500 BBL)
2) Tank Weight: 26,000 lbs. (empty)

NOTES:

1. This drawing is a baseline representation for this model of tank. Variations between this drawing and the actual equipment in the field can and do exist, primarily with appurtenance locations, sizes and quantities. Consult your local BakerCorp representative if specific needs exist.
2. THIS TANK IS *NOT DESIGNED FOR TRANSPORTING LIQUIDS*. It should be moved only when empty.
3. Tanks of this type have an internal lining (coating) on the wetted surfaces.
4. This tank is equipped with a pressure/vacuum relief valve set at 1.0 1bs/sq. in. pressure and 0.4 oz/sq.in. vacuum.

The information contained herein is proprietary to BakerCorp and shall not be reproduced or disclosed in whole or in part, or used for any design or manufacture except when user obtains direct written authorization from BakerCorp.

REV.	DESCRIPTION	DATE	BY
G			
F			
E			
D			
C			
B			
A	ADDED HIDDEN LINES / LIGHTENED HANDRAILES	7/12/05	Z.E.R

BAKERCORP™
3020 OLD RANCH PARKWAY
SEAL BEACH, CA 90740-2751

SCALE:	SIZE B	ORIGINAL DWG. DATE 25FEB02
DRAWN BY: A. R.	APPROVED BY: –	CAT/CLASS ––
TITLE EZ CLEAN VAPOR–TIGHT		SHEET 1 OF 1
DRAWING NO. S-1-M0007-1-		REV. A

VCC 8x30 Virgin Coconut Shell Carbon

BakerCorp's VCC 8x30 mesh virgin carbon made from select grades of coconut shell. These activated carbon granules are a uniform adsorbent with well developed pore structure, allowing for a wide range of adsorbate retention. This carbon is ideal for purification of potable water, industrial wastewater treatment and groundwater treatment. This product is also suitable for refinement of organic liquids requiring purification and color reduction, such as amine and glycol solutions and will remove MTBE from groundwater.

PHYSICAL PROPERTIES:

Carbon Tetrachloride Activity:	60% minimum
Apparent Density (lbs./cu.ft.):	29 average
Total Ash Content:	3% maximum
Hardness (Ball Abrasion):	98% minimum
Iodine Number:	1,000 minimum
Moisture (as packed):	5% maximum
Mesh Size:	8x30

Standard Packaging: 1000 lb. super sacks. Other packaging available upon request.

These specifications represent general parameters and are subject to change. Please consult with BakerCorp before processing with your applications.

CONFORMED

4306 W. 190th Street, Torrance, California 90504
Phone: 310.303.3700 ♦ Fax: 310.406.3001

PRODUCT DATA SHEET

April, 2007

3" 304 S.S. BAG / CARTRIDGE FILTER SYSTEM

GENERAL INFORMATION

Two parallel-piped bag filters are followed by a single cartridge filter (can be converted to hold a single #2 bag instead) and are mounted on a forkliftable skid. Housings are not ASME code stamped. Different bag and cartridge elements are available depending on job requirements and should be specified by the customer prior to use.

WEIGHTS AND MEASURES

» Capacity*:	100 gpm (2 bag/ 1 cartridge) 200 gpm (3 bags, 5 microns and up) 300 gpm (parallel flow w/5 micron bags)
» Design Press:	150 psig
» Design Temp:	225°F max.
» Height:	5'-1" (overall)
» Width:	4'-0"
» Depth:	6'-2"
» Weight:	1175 lbs. (approx.)

*Capacity (flowrate) depends on factors such as liquid viscosity, micron value of the filter media, solids loading etc. Assuming a 10 micron rating, the clean pressure drop through the bag filter would be 2-3 psi and the drop through the cartridge about 2 psi additional. Lowering the micron rating of the cartridge below 10 will increase the drop into the 4-6 psid range. Cartridges are normally spent at 24-28 psid.

SKID DESIGN

» Skid:	2"x2" and 2"x4" c.s. structural tubing
» Vessel Mount:	Legs are attached to cross supports on skid
» Forklift Pockets:	Through front and rear framing channels (Each pocket is 21" wide)

FILTER DESIGN

» Assembly Number:	Krystil Klear L88(CL)303FA41523F4DF
» Vessel Covers:	Three eye nuts; hinged for easy access
» Piping:	3" Sch. 40 304 SS (SA-312-304)
» Inlet & Outlet:	3" Male Cam Lock
» Cartridge Elements:	6 required; Double Open End, 2-1/2" o.d. and 30 inches long; typically polyester or polypropylene string wound; 0.5 micron range and up.
» Bag Elements:	One size #2, 7-1/16" snap ring & 30" length required in each housing; Available fibers range from 1 to 1500 microns.
» Lid Seals:	Buna N
» Valves:	3" 150" butterfly with Buna packing
» Internal Hardware:	*Bag Filter*: 316 SS strainer basket with 9/64" perforations, 30" deep. 6.7" dia. *Cartridge Filter*: 316 SS center guide post, cup & spring assemblies

TESTS / CERTIFICATIONS

» Test Performed:	OEM Hydrotested @ 195 psi. Scheduled QMS inspections after purchase by BakerCorp.

CONFORMED

BAKERCORP™

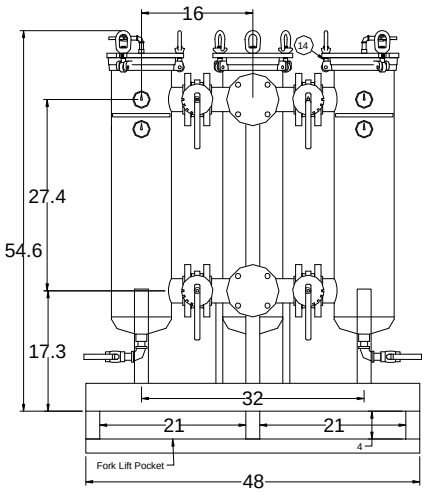

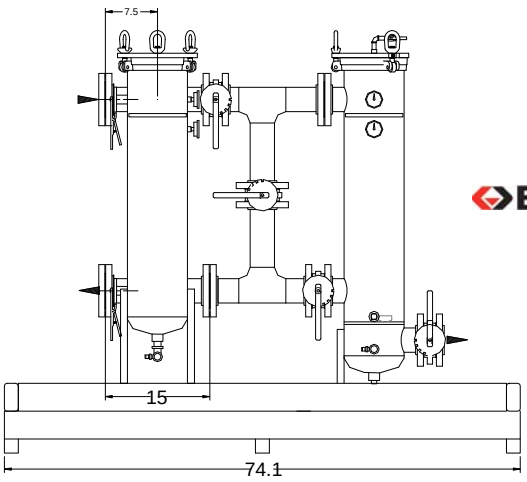

BAKERCORP™

To the best of our knowledge the technical data contained herein are true and accurate at the date of issuance and are subject to change without prior notice. No guarantee of accuracy is given or implied because variations can and do exist. NO WARRANTY OR GUARANTEE OF ANY KIND IS MADE BY BAKERCORP, EITHER EXPRESSED OR IMPLIED.

3020 Old Ranch Parkway • Suite 220 • Seal Beach, CA • 562-430-6262

PRODUCT DATA SHEET
January, 2007

FLIP TOP WEIR TANK
(VE ENTERPRISES VERSION)

GENERAL INFORMATION

This fixed-axle tank is fitted with two internal weirs and 14 top inspection doors.

WEIGHTS AND MEASURES

» Capacity:	20,000 gallons
» Height:	8'-6¼" (grade to tank roof) 12'-8½" (grade to top of handrails when up)
» Width :	8'-6"
» Length:	45'-7½" (tank only), 50'-0" (nose-to-bumper)
» Weight:	33,000 lbs.

STRUCTURAL DESIGN

» Floor:	¼" ASTM A36 carbon steel. "V" bottom sloping from each side to centerline of tank
» Sides/Ends:	¼" ASTM A36 carbon steel, corrugated shape
» Roof Deck:	¼" ASTM A36 carbon steel
» Wall Frame:	Corrugations only, no internal frame
» Internal Weirs:	Two internal steel weirs equally spaced to create three compartments inside tank. Overflow weir (forward weir) extends from floor up to one foot from top of tank. Underflow weir extends down from roof and terminates one foot from floor seam at sidewalls. Designed for 16 lbs. per gallon liquid on one side of weir and no liquid on the other side.

FEATURES

» Relief Valve:	None
» Valves:	(2) 4" wafer style butterfly valve, Bray series 30 or equivalent, with cast iron body, Buna-N seat and seals, 316 SS stem, Nylon 11 coated ductile iron disk

FEATURES – cont.

» Fill Line:	One 3-inch schedule 40 ASTM A106B pipe with cap and securing chain. Line enters front of tank near top with dip tube into first compartment down approx. halfway from bottom of tank where it 90° elbows into compartment.
» Front Drain:	One 4" wafer style butterfly valve. Mounted on 150# weld neck flange on tank side and 150# FPT flange on outside with plug and chain.
» Rear Drain:	One 4" wafer style butterfly valve. Mounted on 150# weld neck flange on tank side and 150# FPT flange on outside with plug and chain. Remote-operation handle.
» Rear Process Outlet:	One (1) 4" flanged and blinded nozzle 18" below roof deck
» Top Doors:	14- 51"x39"x10ga plate lids
» Manways:	Three (3) 22" diameter, passenger side
» Manway Seals:	Buna-N (NBR)
» Stairway:	OSHA compliant non-slip stairway with handrails and guardrails
» Walkway:	Full length of tank with guardrails on both sides; door handles accessible

SURFACE DETAILS

» Exterior Coating:	High gloss polyurethane
» Interior Coating:	Chemical resistant lining

TESTS/CERTIFICATIONS

» Test Performed:	100% water-tested to full capacity by OEM, plus level 1, 2 &3 QMS inspections by Baker Tanks

CONFORMED

BAKERCORP™

To the best of our knowledge the technical data contained herein are true and accurate at the date of issuance and are subject to change without prior notice. No guarantee of accuracy is given or implied because variations can and do exist. NO WARRANTY OR GUARANTEE OF ANY KIND IS MADE BY BAKERCORP, EITHER EXPRESSED OR IMPLIED.

3020 Old Ranch Parkway • Suite 220 • Seal Beach, CA • 562-430-6262

ITEM	QTY	DESCRIPTION
1	3	22" diameter manway
2	2	4" drain conn. w/butterfly valve
3	1	Stairway assembly
4	1	Walkway with handrail
5	14	Flip top door plates
6	14	Door plate handles
7	1	3" fill line
8	1	4" nozzle
9	5	Brace assembly
10	2	Weir plate

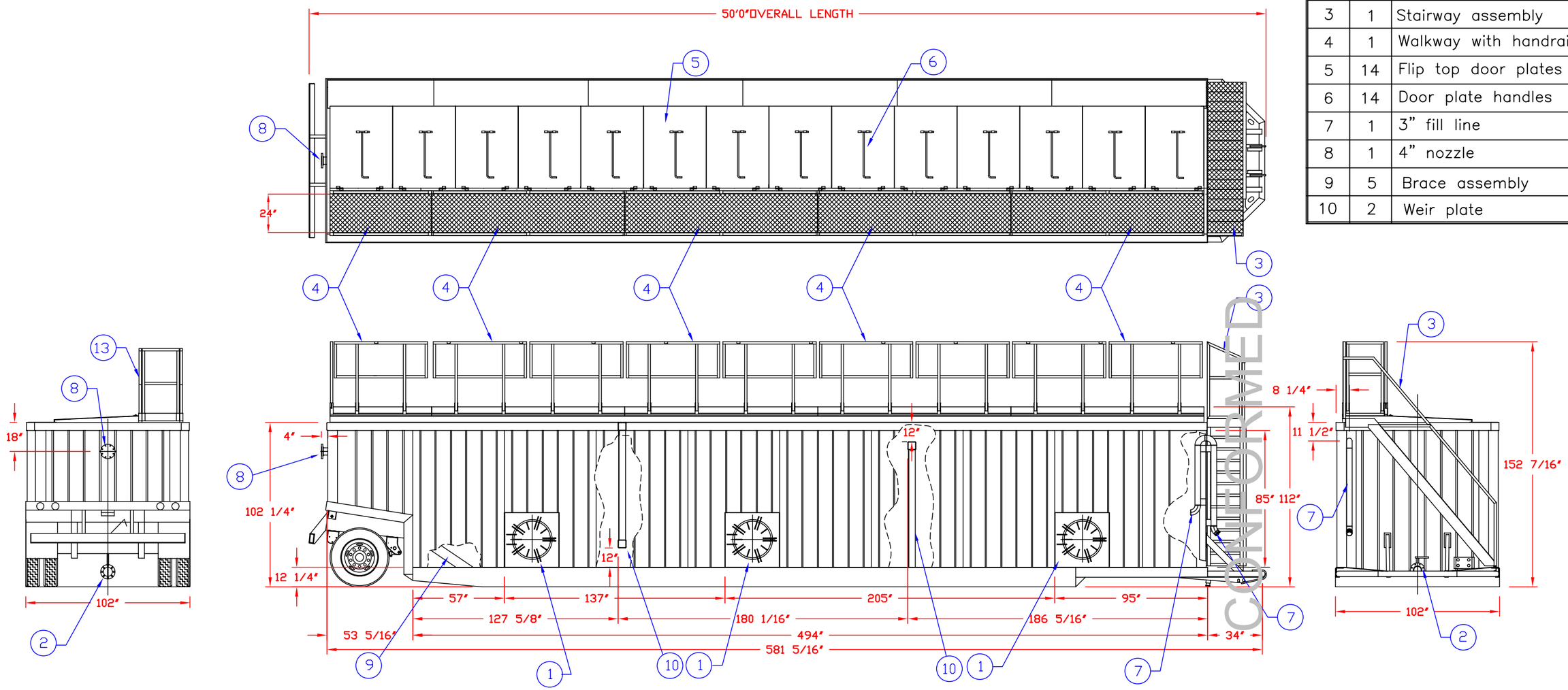

SPECIFICATIONS:

1) Tank Capacity: 20,000 gallons (476 BBL)
2) Tank Weight: 33,000 lbs. (empty)

NOTES:

1. This drawing is a baseline representation for this model of tank. Variations between this drawing and the actual equipment in the field can and do exist, primarily with appurtenance locations, sizes and quantities. Consult your local BakerCorp representative if specific needs exist.
2. THIS TANK IS *NOT DESIGNED FOR TRANSPORTING LIQUIDS*. It should be moved only when empty.
3. Tanks of this type have an internal lining (coating) on the wetted surfaces.
4. This tank is constructed from A36 carbon steel.

The information contained herein is proprietary to BakerCorp and shall not be reproduced or disclosed in whole or in part, or used for any design or manufacture except when user obtains direct written authorization from BakerCorp.

REV.	DESCRIPTION	DATE	BY
G			
F			
E			
D			
C			
B			
A	FIXED CUTAWAYS / LINEWEIGHT	7/12/05	Z.E.R

BAKERCORP™
3020 OLD RANCH PARKWAY
SEAL BEACH, CA 90740-2751

SCALE: DO NOT SCALE	SIZE B	ORIGINAL DWG. DATE 16JUL02
DRAWN BY: P.J.B.	APPROVED BY:	CAT/CLASS --
TITLE VE ENTERPRISES FLIP TOP WEIR TANK		SHEET 1 of 1
DRAWING NO. S-2-M0005-1-		REV. A

Attachment D
Typical Specifications for 700 Gallon Per Minute Temporary Groundwater Treatment Plant

NOTE: All equipment brands depicted herein shall be
considered as "typical" and are provided for reference purposes,
with "or equivalent" applicable to all equipment.

CONFORMED

PRODUCT DATA SHEET

March, 2007

D-KLEEN.WATER 10K

GENERAL INFORMATION

This system is designed for continuous aqueous phase treatment of groundwater or wastewater, and has the ability to remove contaminants to non-detectable levels. The influent stream may be drawn in through the system in either series or parallel flow, and can operate on one vessel only while the other is in backwash mode. BakerCorp can provide a number of service and disposal options for the spent media,

WEIGHTS AND MEASURES

» Max. Flowrate:	Up to 600 gpm in series or 1200 gpm in parallel (application dependent)
» Max. Pressure:	100 psi
» Max. Temp:	150°F
» Height:	10′-6″ (overall)
» Width:	8′-0″ (skid)
» Length:	25′-0″ (skid)
» Diameter:	96″ (each vessel)
» Shipping Wt.: (empty)	40,000 lbs.(equipment – 20,000 lbs; activated carbon – 20,000 lbs)
» Operating Wt.:	80,000 lbs. (including 40,000 lbs. water)

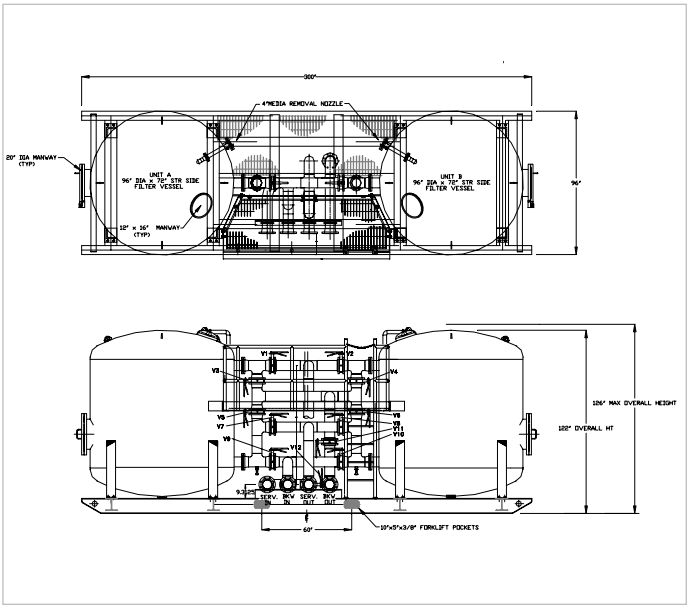

FILTER MEDIA

» Types:	▪Activated Carbon ▪Organoclay ▪Ion Exchange Resin ▪Specialty Media
» Volume:	320 cu. ft per vessel (640 cu. ft. total)
» Weight:	~10,000 lbs. each vessel (20,000 lbs. total)

MISCELLANEOUS DATA

» Vessel Code:	ASME Code stamped for 100 psi @ 150°F.
» Service In/Out:	6″ Flanged connection w/ sch. 40 piping
» Backwash In/Out:	6″ Flanged connection w/ sch. 40 piping
» Manifold Valves:	6″ Lever-operated cast iron butterfly
» Media Removal:	4″ top-mounted nozzle with draw connection at grade
» Internals:	Lower Underdrain: 6″ header/2″x1″ drop strainer type constructed of 316 SS Upper Distributor: 6″ header/3″ open end riser type constructed of 316 SS
» Platform:	Galvanized grating with perimeter guardrails
» Vessel Interior Access:	Top manway – 12″x16″ elliptical Side manway – 20″ round
» Manway Gaskets:	Neoprene
» Interior Coating:	Polyamine epoxy coating

PRESSURE DROP DATA & OPTIONS AVAILABLE

Contact BakerCorp

NOTE:

1. Wet activated carbon preferentially removes oxygen from air. In closed or partially closed containers and vessels, oxygen depletion may reach hazardous levels. If workers are to enter a vessel containing carbon, appropriate procedures for potentially low oxygen spaces must be followed, including all federal and state requirements.

CONFORMED

BAKERCORP™

To the best of our knowledge the technical data contained herein are true and accurate at the date of issuance and are subject to change without prior notice. No guarantee of accuracy is given or implied because variations can and do exist. NO WARRANTY OR GUARANTEE OF ANY KIND IS MADE BY BAKERCORP, EITHER EXPRESSED OR IMPLIED.

3020 Old Ranch Parkway • Suite 220 • Seal Beach, CA • 562-430-6262

PRODUCT DATA SHEET

January, 2007

YARDNEY 4-POD SAND FILTER

(Equip. # SFL21988 and earlier)

GENERAL INFORMATION

Skid mounted high rate automatic backwashing sand media filter (4 tanks (pods)) designed for general-purpose water filtration of organic and inorganic solids (Yardney Model # IL5424-4AS2). Powered by 110 V external power supply, or battery with solar cell recharge for remote operation.

WEIGHTS AND MEASURES

» Capacity:	504 – 756 gpm (Normal flow range) 1000 gpm (Peak flow)
» Design Press:	80 psi maximum
» Temperature:	Limit to ambient. Consult BakerCorp if temperature exceeds 100 degrees.
» Filtration:	To 50 microns
» Height:	8'-11" (overall)
» Width :	6'-3"
» Length:	20'-1"
» Weight:	6,326 lbs. – equipment only 14,500 lbs. – media only 28,000 lbs. - operational
» Backflush:	240 gpm, automatic

OPERATING REQUIREMENTS

» Compressed Air:	5 cfm minimum at 60 psi **[Note: external air supply required]**
» Sand Media:	Crushed silica, 0.47MM (#80 grit)
» Gravel Media:	#3 crushed rock, ½" x ¾"
» Input Power:	Selectable input power of customer supplied 110 V AC, or 12V DC from a unit mounted solar package.
» Output Power:	12V DC

FEATURES

» System Controller:	Automatic Filter Controller. Flush activation based on elapsed time and/or pressure differential.
» Piping:	Inlet & outlet pipe is 6" A53B, 3/16" wall; weld fittings are A234; flanges are A106. Backflush piping is 4" schedule 40 PVC.
» Solar Panel:	Uni-Solar Model UA-5 (5 watts) module.

FEATURES – con't

» Press. Gauge:	2" face, ¼" NPT bottom connection, stainless steel case, plexiglass lens, brass bourdon tube, 0-100 psi range.
» Flowmeter:	Six-inch propeller type meter, AWWA C704-92 compliant. Instantaneous flowrate indicator and six-digit totalizer. Accuracy is ±2% of reading. Repeatability of 0.25%. Rated at 90-1200 gpm, 150 psi, 160°F. Tube: epoxy-coated carbon steel; Impeller: high-impact plastic.
» Butterfly Valves:	Effluent / Influent: 6" with cast iron body (epoxy coated), EPDM seat, 304 SS stem and aluminum bronze disc. Tank Isolation: 4" grooved ends, EPDM disc coating
» Ball Valves:	Four-inch, bronze body and brass ball; seat is carbon/glass-filled PTFE. ¼ turn open or close.
» Solenoid Valve:	12V DC, normally closed type 7121V (energizing opens valve).
» Differential Press. Switch:	0-30 psid. Two-inch dial, plated steel case, ±3% accuracy.
» Air / Vacuum Release Valve:	2" Bernard Model 4415 valve, mounted on backwash, influent and effluent lines
» Battery:	Sealed rechargeable lead-acid, 12V, NP2.6-12
» Battery Charger:	Power-Sonic Model PSC-12500A, 12 volts.
» Tubing:	Pressurized – ¼" 304 ss w/ Hoke fittings; Drain - ¼" polypropylene; Vent – schedule 80 PVC

SURFACE DETAILS

» Interior Coating:	3M Skotchkote 134
» Exterior Coating:	High Gloss Polyurethane

TESTS/CERTIFICATIONS

» Tests Performed:	OEM pressure tested. BakerCorp performs scheduled QMS inspections.

CONFORMED

BAKERCORP™

To the best of our knowledge the technical data contained herein are true and accurate at the date of issuance and are subject to change without prior notice. No guarantee of accuracy is given or implied because variations can and do exist. NO WARRANTY OR GUARANTEE OF ANY KIND IS MADE BY BAKERCORP, EITHER EXPRESSED OR IMPLIED.

3020 Old Ranch Parkway • Suite 220 • Seal Beach, CA • 562-430-6262

PRODUCT DATA SHEET

March, 2008

8" 304 STAINLESS STEEL 12-BAG FILTER SYSTEM

GENERAL INFORMATION

Single vessel mounted on a forkliftable skid. Housing is not ASME code stamped. Different filter elements are available depending on job requirements and should be specified by the customer prior to use.

WEIGHTS AND MEASURES

» Capacity*:	1200 – 2000 gpm (@ 1 micron and up)
» Design Press:	150 psig
» Design Temp:	225°F max. (gasket dependent)
» Height:	7'-5" (overall)
» Width:	4'-11"
» Depth:	7'-5"
» Weight (dry):	1075 lbs. (approx.)

*Capacity (flowrate) depends on factors such as liquid viscosity, micron value of the filter media, solids loading etc. Assuming water as a filtrate and factoring in pressure drop only, 2000 gpm is a practical upper limit for a size #2 bag with a 100 micron rating; 1200 gpm with 1-micron rated bags.. Clean pressure drop would be 2-3 psi. Lowering the micron rating increases the pressure drop. The minimum pressure drop for this unit at higher micron ratings is 1-2 psi. Filter bags should be changed out at 15-18 psid, or earlier if the process requires it.

SKID DESIGN

» Skid:	2"x2"x0.25" A36 c.s. structural tubing
» Vessel Leg Supports:	3x3x.375 angle, SA-36
» Forklift Pockets:	Through front and rear framing channels

FILTER DESIGN

» Assembly Number:	Krystil Klear LR12-36-30-8F-A-4-15-SP
» Top Head:	(17) closure bolts and nuts with davit lift assembly. 36" O.D., 0.25" thk, SA-240 Gr. 304 stainless steel
» Shell:	36" O.D., 0.25" thick x 28" L . R & T, SA-240 Gr. 304 stainless steel
» Inlet & Outlet:	8" 150# RFSO flanges, SA-182 Gr. 304 S.S.
» Bag Elements:	12 required: size #2, 7-1/16" snap ring & 30" length required; Available fibers range from 1 to 1500 microns.
» Lid Seal:	Buna N O-ring
» In/Out Valves:	8" 150" butterfly with Buna seat
» Internal Hardware:	SA-240 Gr. 304 S.S. tube sheet

TESTS / CERTIFICATIONS

» Test Performed:	OEM Hydrotested @ 195 psi. Scheduled QMS inspections after purchase by BakerCorp.

CONFORMED

BAKERCORP™

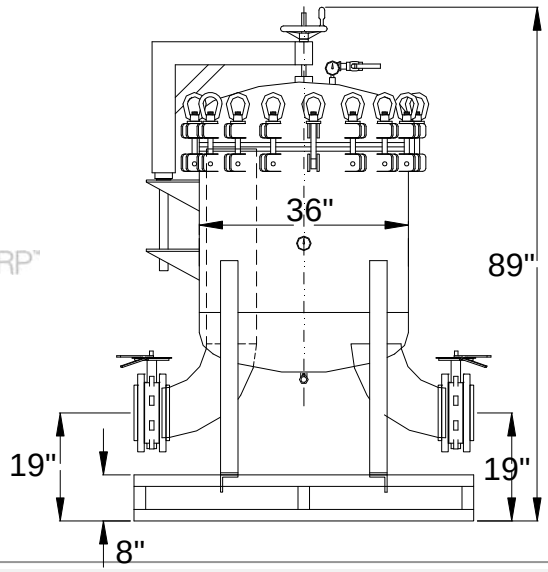

BAKERCORP™

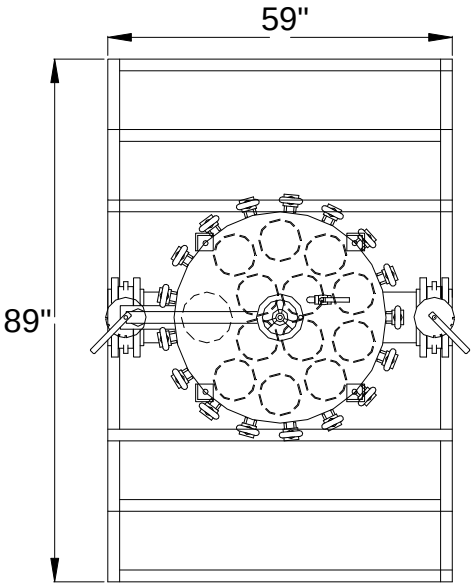

To the best of our knowledge the technical data contained herein are true and accurate at the date of issuance and are subject to change without prior notice. No guarantee of accuracy is given or implied because variations can and do exist. NO WARRANTY OR GUARANTEE OF ANY KIND IS MADE BY BAKERCORP, EITHER EXPRESSED OR IMPLIED.

3020 Old Ranch Parkway • Suite 220 • Seal Beach, CA • 562-430-6262

PRODUCT DATA SHEET

1/4/2012

BP44LS-GD66AT

BakerPrime 4x4 Low Pressure Solids Handling Unit (Attenuated, Trailer)

GENERAL INFORMATION

The compressor/venturi priming system uses a compressor to blow compressed air through a jet into a tapered tube to create a vacuum on the suction.

PERFORMANCE DATA

» Flow (min/max):	-	60 gpm / 925 gpm
» Minimum Shutoff Head:	-	87 feet (38 psi) @ 1550 rpm (1)
» Maximum Shutoff Head:	-	152 feet (66 psi) @ 2100 rpm (1)
» Minimum Speed:	-	1550 rpm
» Maximum Speed:	-	2100 rpm
» Maximum Suction Lift:	-	25 feet (2)
» Maximum Casing Press:	-	99 psi
» Maximum Temperature:	-	160°F (7)
» Maximum Solids Size:	-	3" spherical diameter

PUMP SPECIFICATIONS

» Impeller:	-	9.75"
» Bearing Lubrication:	-	SAE No. 30 Oil
» Vacuum System:	-	8.5 cfm Compressor/Venturi
» Mechanical Seal Lube:	-	SAE No. 30 Oil (3)

PHYSICAL SPECIFICATIONS

» Suction Size:	-	4" flange
» Discharge Size:	-	4" flange
» Approximate Weight:	-	5223 lbs dry / 5720 lbs wet
» Overall Height:	-	89" (to top of lifting eye)
» Overall Width:	-	63" (outer most edges)
» Overall Length:	-	137" (nose to tail)

Enclosure

> Enclosure is made from Galvaneal. Hinged doors on each side provide easy interior access for servicing. Soundproof insulation provides the quietest operation in the industry, and the entire unit, including controls, can be locked for added security.

» Sound Rating:	-	67 dBA at 23 feet

BakerCorp Reference # 404-0105

MATERIAL SPECIFICATIONS

» Pump Casing:	-	Gray Iron No. 30
» Shaft Sleeve:	-	17-4 PH S.S.
» Wear Rings:	-	Carbon Steel No. 1018
» Mechanical Seal Faces:	-	Silicon-Carbide/Silicon-Carbide
» Pump Shaft:	-	Alloy Steel No. 4140
» O-rings:	-	Buna-N
» Impeller:	-	Ductile Iron No. 4140
» Check Valve Body:	-	Gray Iron No. 30
» Check Valve Flapper:	-	Buna-N

ENGINE SPECIFICATIONS

» Engine Make/Model:	-	Deere 4024H
» Total Displacement:		2.4 Liter
» Aspiration:	-	Turbocharged
» Max. Continuous BHP:	-	66 @ 2400 rpm (4)
» Crankcase Oil:	-	SAE 10W40 (5)
» Coolant:	-	50/50 Water/Antifreeze
» Safety Shutdowns:	-	High Water Temp & Low Oil Pressure
» Fuel Consumption:	-	2.78 gal/hr @ 1800 rpm (6)
» Run Time:	-	25 hours at 1800 rpm at 80% Engine Load
» Fuel Capacity/Type:	-	70 gal of No. 2 diesel
» Number of Cylinders:	-	Four

Notes:

(1) Based on 1.0 specific gravity

(2) Depends on flow rate, pump speed, and elevation. See performance curve.

(3) Should always be visable and clear in appearance thru sight glass.

(4) WARNING – this is the rated speed for the ENGINE ONLY. The rated speed of the pump is less. See curve for max pump RPM.

(5) Must be changed every 250 hours of runtime.

(6) Run time fluctuates with speed and engine loads.

(7) Equipment material limitation. Lower max temperature may be necessary due to application conditions and pump NPSH requirements.

CONFORMED

To the best of our knowledge the technical data contained herein are true and accurate at the date of issuance and are subject to change without prior notice. No guarantee of accuracy is given or implied because variations can and do exist.

NO WARRANTY OR GUARANTEE OF ANY KIND IS MADE BY BAKERCORP, EITHER EXPRESSED OR IMPLIED.

PRODUCT DATA SHEET

1/4/2012

BP44LS-GD66AT

BakerPrime 4x4 Low Pressure Solids Handling Unit (Attenuated, Trailer)

PHYSICAL SPECIFICATIONS

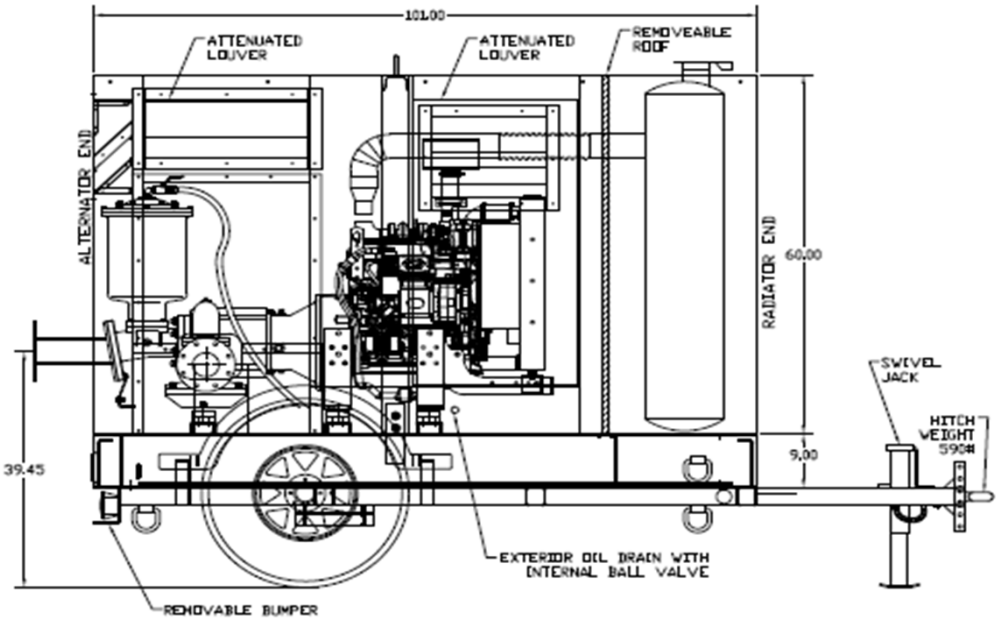

PERFORMANCE CURVE

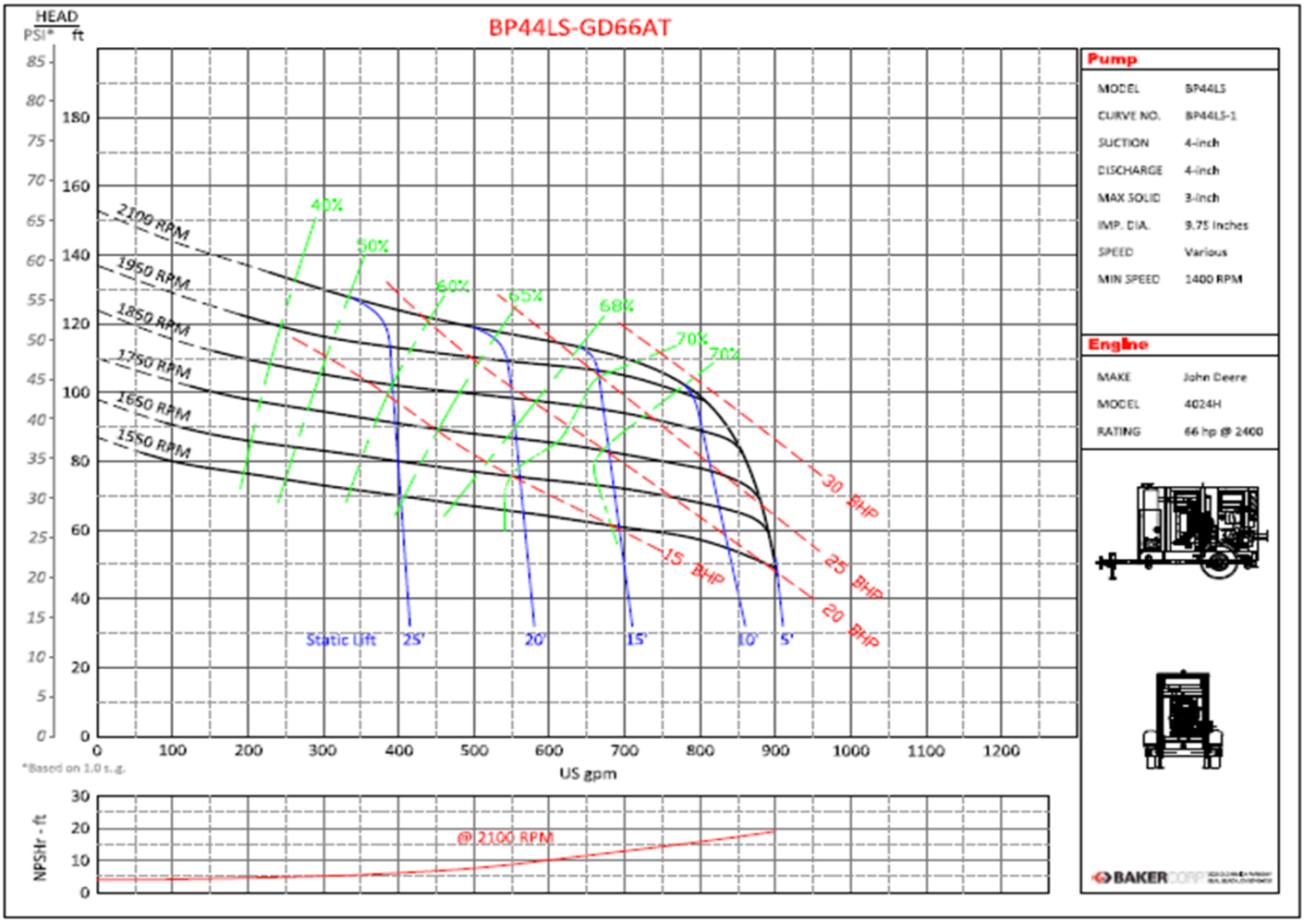

CONFORMED

PUMPS

CONFORMED

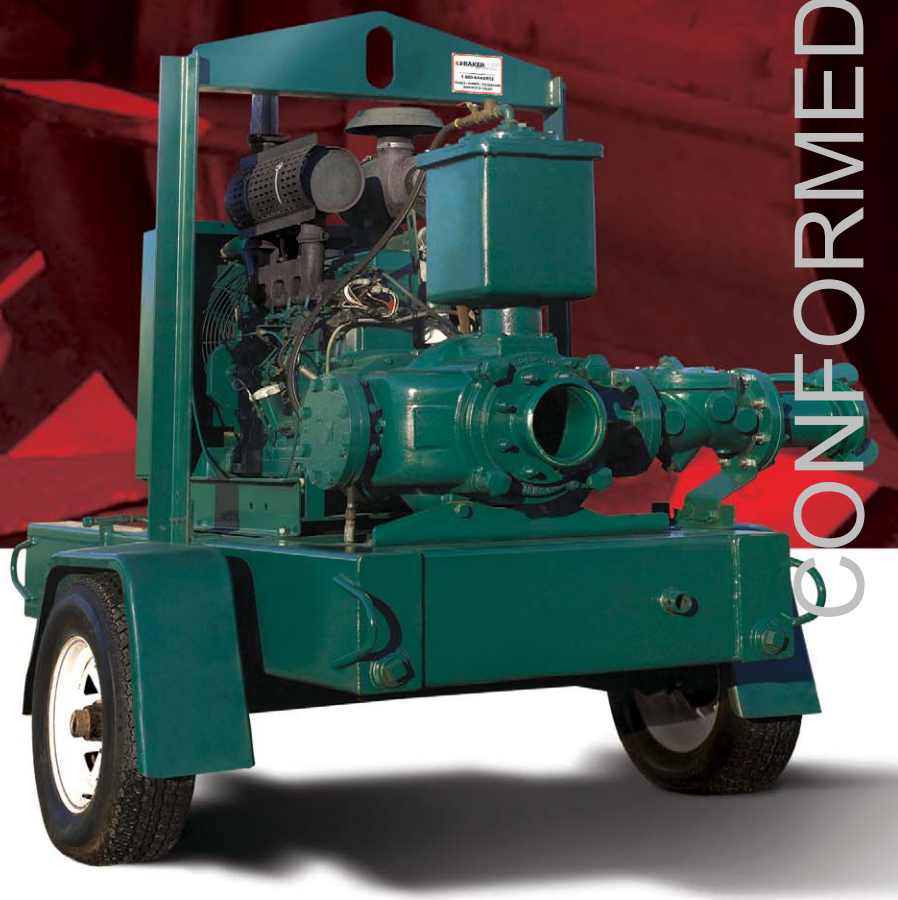

BAKERCORP™

PEOPLE. EQUIPMENT. SOLUTIONS.

TOUGH JOBS. PROVEN RESULTS.

PUMPS FROM BAKER. MAXIMUM PERFORMANCE. ZERO HASSLE.

Since 1942, BakerCorp has thrived in a very demanding business. We began by renting temporary steel storage tanks to the oilfield industry. Today, we are the largest, most experienced containment, pump and filtration company in the world with over 90 locations nationwide and international operations in Europe, Canada and Mexico. We serve a breadth of market segments including chemical, manufacturing, refining, oil and gas, construction, municipal, industrial services and environmental remediation.

BakerCorp has achieved this success by adhering to the highest standard of excellence throughout every area of our business. We stock the largest inventory of quality equipment and keep it running with the most comprehensive maintenance program in the industry. Our teams are comprised of highly-trained professionals with years of experience and vast product knowledge. Their dedication to providing customers with unparalleled, 24/7/365 personal service is constant and unwavering. From the earliest stages of your project's planning through its completion, BakerCorp will work closely with you to design the best solution based upon the specific needs of your application.

Partnering with BakerCorp on your projects means that you will work alongside professionals dedicated to providing quality solutions—integrated solutions that pull from a deep pool of talent, equipment and experience. It means that your challenges will be resolved using the most logical and comprehensive mix of tanks, pumps and filtration systems available anywhere. BakerCorp's depth of experience and reputation for innovative system design ensures your project will be brought to a successful conclusion—the first time and every time.

CONFIDENCE FOR

We know pumps. We know systems. And we know how to get the job done. Whatever the challenge—wastewater removal, flood control, sewer bypass or hydroblast pad water recirculation—you'll find BakerCorp on the job.

Nobody is better equipped than BakerCorp. We inventory an extensive fleet of the highest quality prime assist, self-prime, diesel-driven, electric drive, centrifugal and submersible pumps along with a broad range of pipe, hose and fittings. Our pumps perform at the maximum level because each pump undergoes a rigorous maintenance program completed by certified mechanics to insure the highest level of dependability before it is delivered to the jobsite.

BakerCorp offers an unbeatable combination of equipment selection and application expertise that you can rely on when you're up against a tough pumping project. Our field personnel are cross-trained to be technical experts who specialize in pumps, and nothing but. Closer to application engineers than sales people, they'll point you to solutions that will be cost-effective, labor-friendly and dependable. From system design and set-up to removal after a completed job, you can count on pumping solutions from BakerCorp.

PROVIDING PROVEN SOLUTIONS TO INDUSTRY FOR OVER 65 YEARS.

MUNICIPAL

- Sewer bypass and pipeline projects
- Lift station repair
- Temporary pumps used during sanitary sewer overflow
- Sludge pumping for wastewater lagoon clean-up

CONSTRUCTION

- Dewatering
- Temporary firewater systems
- Dust control
- River, lake and stream dredging projects

MANUFACTURING

- Liquid transfer for treatment plant projects
- Temporary pumping for stormwater runoff control
- Additional liquid transfer capacity during maintenance or repairs

REFINERIES

- Pumping for cooling tower liquids and sludges
- Hydroblast pad water recirculation
- Hydrotesting
- Portable pumps for wastewater treatment plant overloads

RENTALS, SALES AND 24/7/365 NATIONWIDE SERVICE... BAKER DELIVERS.

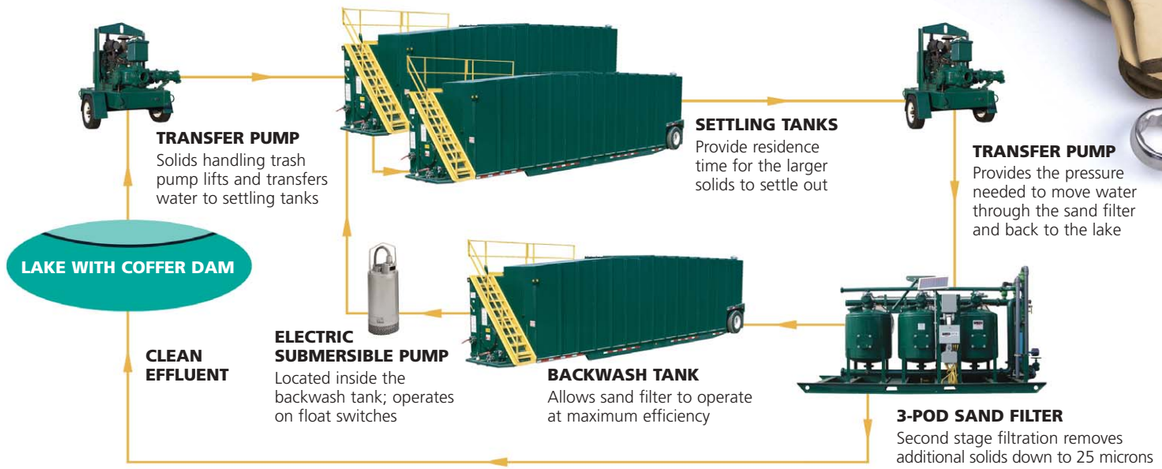

ANATOMY OF AN INTEGRATED BAKERCORP DEWATERING SYSTEM
The above diagram shows a typical dewatering system for lakeside construction. Using this system, a large volume of dirty, silty water can be pumped from inside a coffer dam and through the filtration process efficiently. The construction can then be completed inside the coffer dam while the clean effluent water is safely returned to the lake.

Our emergency response service is available 24/7/365 by field technicians that work exclusively on pumps. Their expertise in the field is unmatched and supplemented with ongoing specialized technical and mechanical training.

SETTING THE STANDARD—THE BEST MAINTAINED PUMPS IN THE INDUSTRY.

You can count on BakerCorp's vast network and inventory for immediate delivery of the highest quality pumps and systems. Our rigorous QMS maintenance program—patterned after ISO 9000 certification guidelines—helps insure consistent delivery of peak performance and dependability. Designed and tested to meet NESHAP and OSHA standards, every pump must pass up to three levels of inspection by a BakerCorp certified mechanic before release into the field.

Performance tests are conducted on the engine and pump including starting, idling and shut down operations. All seals, gaskets, valves, discharge manifolds, guards, plugs, filters, pipes, hoses and fittings are carefully checked for any breach of integrity. Fluid levels are topped off and equipment is given a final check for cleanliness and instructions for operation.

A Reputation for Excellence
Our technical sales staff's ability to accurately evaluate the needs of your project, design an effective solution and manage its timely delivery and installation is second to none.

Other team members regularly participate in Pump Application Training (P.A.T.) to keep informed of current technologies and trends.

In addition, stringent safety programs focusing on both site and product specific training help ensure that our people bring an unparalleled level of expertise to each and every job.

SEWER BYPASS

REFINERY TURNAROUND

RESIDENTIAL DEWATERING

In addition to the industry's most comprehensive pump solutions, BakerCorp's tank and filtration divisions deliver the same levels of expertise, service and quality synonymous with our pump solutions.

TANKS. NO BIGGER INVENTORY. NO BETTER SERVICE.

Nobody knows temporary containment like BakerCorp. With an unmatched inventory of tanks and accessories, we rent 17 varieties of steel tanks alone, along with poly tanks, roll off boxes, and specialty equipment.

Our unrivaled history and experience, combined with our world-class applications expertise and 24/7/365 emergency-ready support, BakerCorp gets the call on the toughest containment challenges. Our engineers analyze every aspect of your project resulting in a highly efficient solution. Then we deliver it directly to your jobsite, set it up and remove it once the project is complete.

Whatever the job—construction runoff, cooling tower cleaning, wastewater storage/treatment or environmental remediation—BakerCorp delivers.

FILTRATION. LIQUID OR VAPOR. CLEARLY SUPERIOR SOLUTIONS.

From engineered solutions to on-site services and waste management, BakerCorp provides filtration expertise in the fields of specialty media, applied science, and hazardous materials. Our scientists and engineers—with extensive knowledge of contaminants, environmental laws and regulations, hazardous material management and health and safety—enable us to customize solutions to meet exact requirements. And once in place, our on-site service technicians and waste management teams provide comprehensive support.

Whatever your needs, BakerCorp is on call, nationwide, wherever and whenever.

PUMPS

	Priming Assisted	Self Priming	High Pressure	Electric
Ideal Usage	Construction site dewatering, sewer bypass, tank cleaning, flood management, municipal projects.	Refineries, chemical facilities, waste water treatment plants, construction site dewatering.	Industrial water blasting, Pipeline pigging, irrigation, standby fire protection, environmental cleanups.	Construction and industrial applications of all types where diesel engines are not allowed or are impractical.
Benefit	Can operate in flooded conditions and pull a suction lift. Fully automatic priming. Dry-run capability.	Low maintenance. Easy access with large cleanout port. Emergency shutdown features.	Produces enough pressure to eliminate multiple pumps. Operates in flooded conditions. Unattended operation.	Clean and quiet operation. Refueling is not required.
PERFORMANCE				
Suction Size	4" – 12"	3" – 6"	4" – 10"	3" – 10"
Discharge Size	3" – 12"	3" – 6"	3" – 8"	3" – 8"
Max Flow Range	300 gpm – 6,000 gpm	450 gpm – 1,700 gpm	800 gpm – 5,200 gpm	Up to 5,200 gpm
Suction Lift	Up to 28'	Up to 28'	Up to 28'	Up to 28'
Max Shut Off Head Range	90' – 490'	112' – 171'	285' – 490'	Up to 480'
Max Solids Size	Up to 3.35"	Up to 3"	1/2" – 3.35"	Up to 3.35"
Max Operating Temp	150° F – 190° F	Up to 160° F	150° F – 175° F	Up to 160°F
Fuel	No. 2 Diesel	No. 2 Diesel	No. 2 Diesel	Electric; 115/230/460 volts
Run Time per Full Tank	Typically 24 hrs. Call for details.	Typically 24 hrs. Call for details.	8 – 24 hours	N/A
Fuel Capacity	30 gallons – 171 gallons	50 gallons – 88 gallons	60 gallons – 235 gallons	N/A
Operating Speed	1,000 rpm – 2,400 rpm	1,000 rpm – 2,200 rpm	1,000 rpm – 2,400 rpm	Typically 1,800 rpm
GENERAL INFORMATION				
Weight	2,050 lbs – 7,900 lbs	2,000 lbs – 3,900 lbs	3,300 lbs – 7,900 lbs	Less than diesel counterparts
Standard Mount	Trailer or skid	Trailer or skid	Trailer or skid	Skid
Prime Mover	Diesel engine and electric motor	Diesel engine and electric motor	Diesel engine and electric motor	Typically open drip proof motors
Casing Material	Ductile iron, cast iron and 316 stainless steel	Cast iron	Cast iron and stainless steel	Ductile iron or cast iron
Seal Type	Silicon carbide/silicon carbide or silicon carbide/tungsten carbide	Tungsten/tungsten or silicon/silicon	Silicon carbide and tungsten carbide	Silicon carbide and tungsten carbide
Safety Features	Coupling guards; high water temperature and low oil pressure shutdowns on diesel engines.	Coupling guards; high water temperature and low oil pressure shutdowns on diesel engines.	Coupling guards; high water temperature and low oil pressure shutdowns on diesel engines.	Coupling guards. Circuit breakers and overload protection in NEMA 3R enclosures.

	Electric Submersible	Hydraulic Submersible	Air Diaphragm	Sound Attenuated	Utility
Ideal Usage	Removing water and handling solids up to 3.15" when electric power source is available.	High suction lift applications such as sewer bypass jobs. Dewatering of mines, quarries and gravel pits.	Sludge and slurries, flood control and dewatering situations associated with refineries. Applications where compressed air is available.	Sewer bypass projects in residential areas. "Quiet Zones" such as hospitals or retail commercial areas.	Construction site dewatering, product transfer, emergency standby, sewage transfer, irrigation and farm use.
Benefit	Around–the–clock unattended operation. User-friendly. Quiet operation. Lower labor costs.	No suction line limitations. Unattended operation. Submerged pump head. Variable speed. No electrical requirements.	Light and portable. Adjustable flow rates. Non-stall air valves. Easy to use. Flexible. Reduces down time.	Sound enclosures significantly reduce noise. Tested to meet CPB standards.	Light and portable. Easy access to pump. Economical, maintenance-free, self-lube mechanical seal.
PERFORMANCE					
Suction Size	—	—	1"– 3"	4" – 8"	2" – 3", NPT
Discharge Size	3" – 10"	4" – 6"	1"– 3"	4" – 8"	2" – 3", NPT
Max Flow Range	100 gpm – 5,000 gpm	Up to 1,750 gpm	40 gpm – 250 gpm	150 gpm – 2600 gpm	225 gpm – 425 gpm
Suction Lift	N/A	N/A	Up to 24'	Up to 28'	Up to 20'
Max Shut Off Head Range	Up to 375'	65' – 130'	Up to 230'	Up to 195'	Up to 98'
Max Solids Size	3/8" – 4"	Up to 4"	1/4" – 2"	3"	Up to 1 1/2"
Max Operating Temp	100° F – 120° F	150° F – 190° F	212° F	160° F	150° F
Fuel	Electric; 115/230/460 volts	No. 2 Diesel (for the hydraulic power unit)	Compressed air	No. 2 Diesel	Gasoline
Run Time per Full Tank	N/A	24 hours	N/A	24 hours	Two hours
Fuel Capacity	N/A	50 gallons – 112 gallons	N/A	61 gallons – 84 gallons	1 gallon – 1.5 gallons
Operating Speed	Typically 1,800 rpm or 3,600 rpm	1200 rpm – 2200 rpm (engine speed)	N/A	1,000 rpm – 2,200 rpm	2,000 rpm – 3,600 rpm
GENERAL INFORMATION					
Weight	30 lbs – 1,500 lbs	135 lbs – 420 lbs (pump head)	79 lbs – 379 lbs	4,100 lbs – 4,700 lbs	90 lbs – 150 lbs
Standard Mount	N/A	HPU's are trailer mounted	Skid or roll cage	Skid or trailer	Roll cage
Prime Mover	Electric motor	Diesel engine/Hydraulic fluid	Air operated reciprocating diaphragm	Diesel engine	Gasoline engine
Casing Material	Cast iron, aluminum and stainless steel	Cast iron or carbon steel	Aluminum, stainless steel, and polypropylene	Cast iron or ductile iron	Aluminum
Seal Type	Tandem, oil lubricated.	Tungsten/tungsten or carbon/ Ni-hard steel	N/A	Silicon carbide and tungsten carbide	Silicon carbide; grease lubricated
Safety Features	Circuit breaker and motor overload protection in NEMA 3R enclosures.	High water temperature and low oil pressure shutdowns on diesel engines. Hydraulic system overpressure protection.	No fuel handling required. No electrical hook-ups required.	Coupling guards; high water temperature and low oil pressure shutdowns on diesel engines.	Auto shutdown on low oil level. Roll cage.

Discontinued

VISIT www.bakercorp.com FOR ADDITIONAL SPECIFICATIONS. CALL YOUR LOCAL BRANCH FOR PRODUCT AVAILABILITY. 1-800-BAKER 12

PIPE, HOSE AND FITTINGS

BakerCorp inventories a complete range of pipe, hose and fittings in various diameters to handle any required flow capacity, including high pressure pumping. BakerCorp can exceed the requirements for any application.

ALL TYPES OF PIPE AND HOSE

- Steel
- Aluminum
- Industrial groove

HDPE FOR HIGH PRESSURE AND FLOW

- Up to 30" diameters
- Fusion machines

MULTIPLE END CONNECTORS

- Bauer
- Quick disconnect
- Camlock
- Flanged

ACCESSORIES

BakerCorp offers a variety of accessories including:

- Secondary Containment Berms
- Road Crossings
- Generators
- Fuel Tanks
- Spill Guards
- Auto-Start Options

MORE EQUIPMENT. MORE LOCATIONS. CONFORMED

BAKERCORP™

3020 Old Ranch Parkway, Suite 220
Seal Beach, California 90740
1-800-BAKER 12
1-562-430-4865 Fax
www.bakercorp.com

FILTRATION

CONFORMED

BAKERCORP™

PEOPLE. EQUIPMENT. SOLUTIONS.

TOUGH JOBS. PROVEN RESULTS.

Since 1942, BakerCorp has thrived in a very demanding business. We began by renting temporary steel storage tanks to the oilfield industry. Today, we are the largest, most experienced containment, pump and filtration company in the world with over 90 locations nationwide and international operations in Europe, Canada and Mexico. We serve a breadth of market segments including chemical, manufacturing, refining, oil and gas, construction, municipal, industrial services and environmental remediation.

BakerCorp has achieved this success by adhering to the highest standard of excellence throughout every area of our business. We stock the largest inventory of quality equipment and keep it running with the most comprehensive maintenance program in the industry. Our teams are comprised of highly-trained professionals with years of experience and vast product knowledge. Their dedication to providing customers with unparalleled, 24/7/365 personal service is constant and unwavering. From the earliest stages of your project's planning through its completion, BakerCorp will work closely with you to design the best solution based upon the specific needs of your application.

Partnering with BakerCorp on your projects means that you will work alongside professionals dedicated to providing quality solutions—integrated solutions that pull from a deep pool of talent, equipment and experience. It means that your challenges will be resolved using the most logical and comprehensive mix of tanks, pumps and filtration systems available anywhere. BakerCorp's depth of experience and reputation for innovative system design ensures your project will be brought to a successful conclusion—the first time and every time.

FILTRATION FROM BAKER. LIQUID OR VAPOR. CLEARLY SUPERIOR SOLUTIONS.

From engineered solutions to on-site services and waste management, BakerCorp provides filtration expertise in the fields of specialty media, applied science, and hazardous materials. Our team of scientists and engineers—with extensive knowledge of contaminants, environmental laws and regulations, hazardous material management and health and safety—enable us to customize solutions to meet specific project requirements for both temporary and permanent applications. And once in place, our on-site service technicians and waste management teams provide comprehensive support. BakerCorp is on call, nationwide, wherever and whenever you need us.

Whatever your needs—vapor & liquid, organic & inorganic, high-flow & low-flow—BakerCorp provides superior solutions. Specialty media applications include activated carbon, ion exchange resins, impregnated media, organoclay, sand and gravel. Our equipment lineup includes high and low-pressure carbon and specialty media vessels, odor control systems, sand filters, duplex cartridges, bag filters and auxiliary equipment.

From timely delivery, installation, pumping and vacuuming to packaging, transporting, recycling, incineration and disposition, BakerCorp offers a full complement of unsurpassed filtration systems and support services.

CONFORMED

PROVIDING PROVEN SOLUTIONS TO INDUSTRY FOR OVER 65 YEARS.

ENVIRONMENTAL REMEDIATION
- Contaminated groundwater/soil treatment
- Dredging
- MTBE, perchlorate and metals removal

OIL, NATURAL GAS AND CHEMICAL
- Tank and sump venting
- Tank cleaning and turnaround projects
- Pipeline pigging and maintenance
- Vapor recovery, amine and glycol applications
- Hydrogen sulfide and mercaptans removal

PROCESS EMISSION CONTROL
- Fugitive emission control
- Purification/separation
- Wastewater
- Municipal water and wastewater plants

CONSTRUCTION
- Removal of turbidity, organic, inorganic and metals in dewatering projects
- Odor control for sewer bypass work
- Stormwater runoff, phase II of NPDES

EMERGENCY RESPONSE
- Filtration of contaminants in natural and man-made incidents and disasters

DESIGN. INSTALLATION. ON-SITE SERVICE. BAKER IS ON CALL...NATIONWIDE.

ANATOMY OF AN INTEGRATED BAKERCORP FILTRATION SYSTEM

The diagram below shows a typical groundwater treatment system in which contaminated runoff water and soil drainage can be removed and safely disposed of before new construction begins. Contaminated water is pumped out of the excavation site and processed through several stages of increasingly fine filtration. The clean effluent is then suitable for discharge to a municipal sewer system or elsewhere.

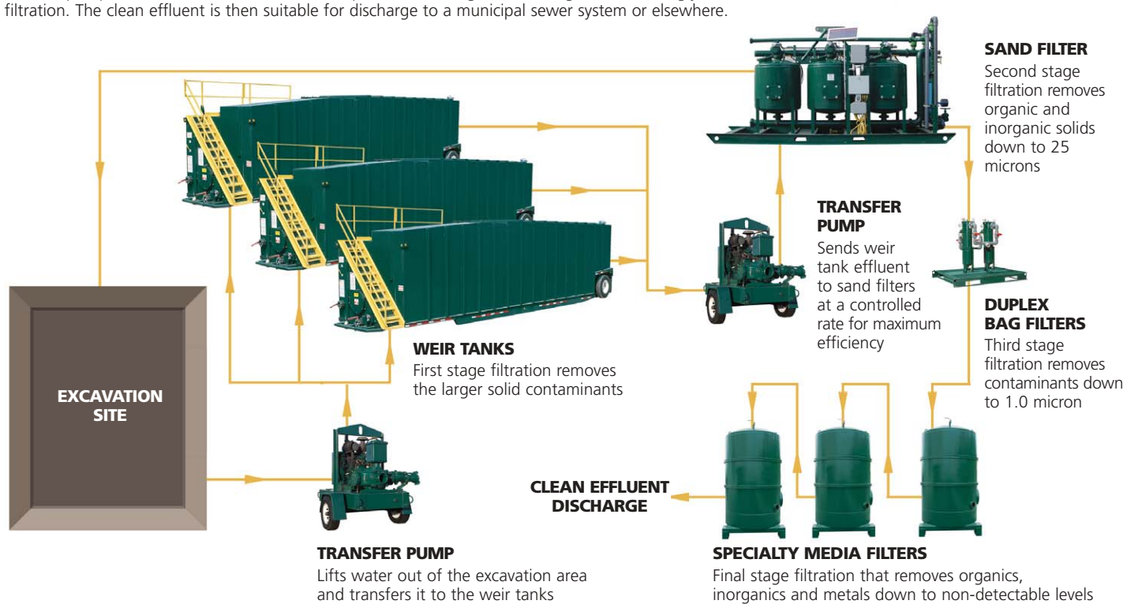

UNSURPASSED FILTRATION SYSTEMS AND SERVICES.

High and low-pressure carbon and specialty media vessels. Odor control systems. Sand filters. Duplex cartridges. Bag filters and auxiliary equipment. No other company offers a more comprehensive lineup of filtration equipment than BakerCorp. We have individual units capable of handling up to 1000 gallons per minute and multiple units can be manifolded together for greater capacity. Our specialty media applications include activated carbon, ion exchange resins, impregnated media, organoclay, sand and gravel and enable us to provide clearly superior solutions to today's filtration challenges.

Custom Engineered Solutions
Leading experts in the fields of specialty media, applied science, and hazardous materials, our scientists and engineers set the industry standard for excellence in custom application solutions. Detailed analysis of every requirement of your project ensures that the system we design meets all of your budgetary and regulatory requirements.

On-Site Services
With regional service centers nationwide, BakerCorp is able to provide an unmatched level of on-site services to complement its filtration solutions. Our specialty teams provide a turn-key, cradle-to-grave solution that includes vacuuming, packaging, transporting, recycling, incineration and land disposal of your spent filtration media. Our OSHA trained technicians, hazardous transportation network, hazardous and non-hazardous recycling facilities and fully permitted incineration facilities provide you with peace of mind while meeting regulatory compliance for any type of waste stream you may encounter.

All of our systems are delivered and installed by our localized teams of HAZ WOPER trained personnel to insure uncompromised performance.

ENVIRONMENTAL REMEDIATION

STORMWATER RUNOFF

SEWER BYPASS ODOR CONTROL

In addition to the industry's most comprehensive filtration solutions, BakerCorp's tank and pump divisions deliver the same levels of expertise, service and quality synonymous with our filtration solutions.

TANKS. NO BIGGER INVENTORY. NO BETTER SERVICE.

Nobody knows temporary containment like BakerCorp. With an unmatched inventory of tanks and accessories, we rent 17 varieties of steel tanks alone, along with poly tanks, roll off boxes, and specialty equipment.

Our unrivaled history and experience, combined with our world-class applications expertise and 24/7/365 emergency-ready support, BakerCorp gets the call on the toughest containment challenges. Our engineers analyze every aspect of your project resulting in a highly efficient solution. Then we deliver it directly to your jobsite, set it up and remove it once the project is complete.

Whatever the job—construction runoff, cooling tower cleaning, wastewater storage/treatment or environmental remediation—BakerCorp delivers.

PUMPS. MAXIMUM PERFORMANCE. ZERO HASSLE.

BakerCorp inventories an extensive fleet of the highest quality prime assist, self-prime, diesel-driven, electric drive, centrifugal and submersible pumps along with a broad range of pipe, hose and fittings. Each pump undergoes a rigorous maintenance program performed by certified mechanics to insure the highest level of dependability. Our field personnel are cross-trained to be technical experts who specialize in pumps, and nothing but. They'll point you to solutions that are cost-effective, labor-friendly and dependable.

Whatever the challenge—wastewater removal, flood control, sewer bypass or hydroblast pad water recirculation—you'll find BakerCorp on the job.

FILTRATION

	Specialty Media	Sand	Duplex Cartridge	Duplex Bag	Odor Control
Ideal Usage	Environmental and industrial contaminant removal, liquid and vapor phase.	Construction, environmental, and industrial sediment removal.	Construction, environmental, and industrial applications.	Industrial and commercial process fluids, urban runoff, groundwater discharge from construction sites or stormwater.	Sewer by-pass and other temporary odor control projects. SCAQMD approved.
Benefit	Skid mounted for portability. Backwashing capabilities. Influent/ effluent gauges and sample ports.	Fully automated. Anti-siphon valves. Easy-to-read gauges. Tool-free plumbing connections. User-friendly. Energy efficient. Lower labor costs.	Portability. Flange-to-flange connections. Continuous operation even during maintenance or filter changes. Reduced mobilization costs.	Coarse filtration in a portable unit. Low or moderate flow particulate removal. Quick installation. Meets municipal requirements for nationwide use.	Adjustable flow range. Variable frequency drive. Sound attenuation. Inlet/outlet sample ports. Simple operation. Meets local regulations.
PERFORMANCE					
Capacity	Liquid: 10 gpm – 1000 gpm; Vapor: 120 cfm – 20,000 cfm	74 gpm – 954 gpm (max normal flow range), depending on model	800 gpm	50 gpm – 200 gpm per clean filter	10,000 cfm
Pressure	Liquid: 0 psi – 75 psi; Vapor: 0 psi – 75 psi	80 psi – 100 psi depending on model	150 psi	150 psi	2 psi
Temperature	Liquid: Ambient to 150° F; Vapor: Ambient to 150° F	Limit to ambient. Consult BakerCorp if temp exceeds 100°	400° F max	w/ PVC Pipe: 140° F; w/ Steel Pipe: 225° F	150° F
Filtration	Down to non-detect levels	Down to 25 microns	Down to 0.5 micron	Down to 1.0 micron	Odor removal
Media Weight Range	Liquid: 100 lbs – 20,000 lbs; Vapor: 100 lbs – 20,000 lbs	1,800 lbs – 14,500 lbs	N/A	N/A	4,000 – 8,000 lbs
Height Range	Liquid: 30" – 190"; Vapor: 30" – 168"	6' 3" – 7' 7"	8' 5" overall	5' 0" – 12' 0"	Approx 14'
Width/Diameter Range	19" – 120"	3' 10" – 5' 0"	7' 0"	3' 8" – 4' 9"	8 0"
Length Range	Skid units available. Call for details.	10' – 21' 3"	15' 0"	4' 8" – 5' 8"	Approx 16'
Equipment Weight Range	45 lbs up. Contact BakerCorp.	1,750 lbs – 6,400 lbs	2,000 lbs	550 lbs – 900 lbs (approx)	Contact BakerCorp.
FEATURES					
Type of Media Used	Granular activated carbon, ion exchange resin, zeolite, organoclay.	Silica, sand, gravel	40" long replaceable cartridges	Filter bags, size #2.	Specialty media
Material of Construction	Carbon steel with epoxy coating on interior surfaces. Some models available in polyethylene.	Carbon steel vessels with epoxy interior coating.	304 stainless steel housings; PVC pipe.	Carbon steel and 304 stainless steel vessels.	Filter vessel is epoxy lined carbon steel with stainless steel screen.
Options	Vapor phase units available in deep bed and radial flow design.	Two, three and four pod models are available.	Combination bag/cartridge units are available.	Combination bag/cartridge units are available.	N/A

VISIT www.bakercorp.com FOR ADDITIONAL SPECIFICATIONS. CALL YOUR LOCAL BRANCH FOR PRODUCT AVAILABILITY. 1-800-BAKER 12

CONFORMED

PIPE, HOSE AND FITTINGS

BakerCorp inventories a complete range of pipe, hose and fittings in various diameters to exceed the needs of any application.

ALL TYPES OF PIPE AND HOSE

- Steel
- Aluminum
- Industrial groove

HDPE FOR HIGH PRESSURE AND FLOW

- Up to 30" diameters
- Fusion machines

MULTIPLE END CONNECTORS

- Bauer
- Quick disconnect
- Camlock
- Flanged

SPECIALTY MEDIA TO HANDLE ANY JOB

Activated Carbon—Granular, pelletized and powdered media to remove organic contaminants from vapor and liquid streams.

Impregnated Media—Effective removal of inorganic contaminants using activated carbon and zeolite based media. Impregnated with chemical reagents.

Ion Exchange Resins—Synthetically manufactured to carry an ionic charge, either positive or negative, ion exchange resins are an effective solution to highly complex applications such as perchlorate and dissoved metals removal.

Metals Removal Media—Specialty media to remove arsenic and other heavy metals.

Oil Removal Media—Specifically manufactured to remove oil and heavy organics from water. This media acts as a cost-effective prefilter for carbon adsorbers.

QUALITY ASSURANCE PROGRAM

BakerCorp has a rigorous maintenance program patterned after ISO 9000 certification guidelines. This QMS program is exclusive to BakerCorp. It ensures each and every one of our filtration units is inspected and of the highest quality each time it's ready for use by a customer.

LEVEL I—BEFORE DELIVERY

- Visual inspection of entire system including influent and effluent connections as well as gaskets, fittings and hatches to make sure they are operating properly and meet job requirements
- Load media if job requires

UPON DELIVERY:

- Review operation of bleed valve, drain valve and if applicable, isolation valves with customer
- Review plumbing—which is influent, effluent, and if customer is installing piping, torque specs
- Review any weather related issues like extreme heat or freezing temperatures

LEVEL II—UPON PICKUP

- All Level I "Before Delivery" inspections
- Inspect interior for lining condition and cleanliness

LEVEL III— MAINTENANCE CHECKUP

- Pressure test filter vessels using compressed air. Check all connections and openings for leaks
- Perform any necessary repairs found in Levels I–II

WASTE MANAGEMENT SERVICES

BakerCorp is your single source for pollution management. Our OSHA trained technicians, hazardous transportation network, hazardous and non-hazardous recycling facilities and fully permitted incineration facilities provide you with peace of mind while meeting regulatory compliance for any type of waste stream you may encounter.

- Contaminated soil & water
- Contaminated debris
- Industrial waste

MORE EQUIPMENT. MORE LOCATIONS.

CONFORMED

BAKERCORP™

3020 Old Ranch Parkway, Suite 220
Seal Beach, California 90740
1-800-BAKER 12
1-562-430-4865 Fax
www.bakercorp.com

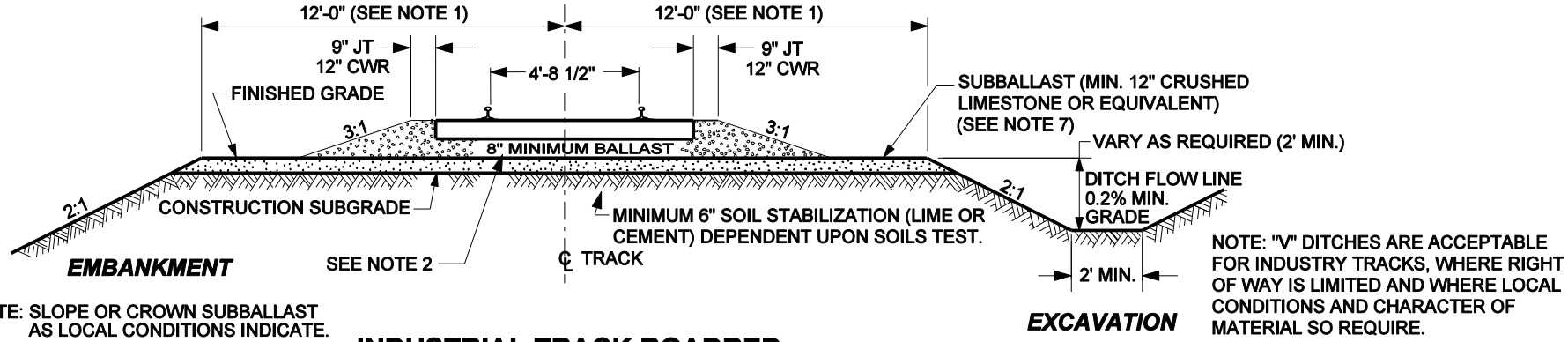

NOTE: SLOPE OR CROWN SUBBALLAST AS LOCAL CONDITIONS INDICATE.

NOTE: "V" DITCHES ARE ACCEPTABLE FOR INDUSTRY TRACKS, WHERE RIGHT OF WAY IS LIMITED AND WHERE LOCAL CONDITIONS AND CHARACTER OF MATERIAL SO REQUIRE.

INDUSTRIAL TRACK ROADBED

TYPICAL SECTION

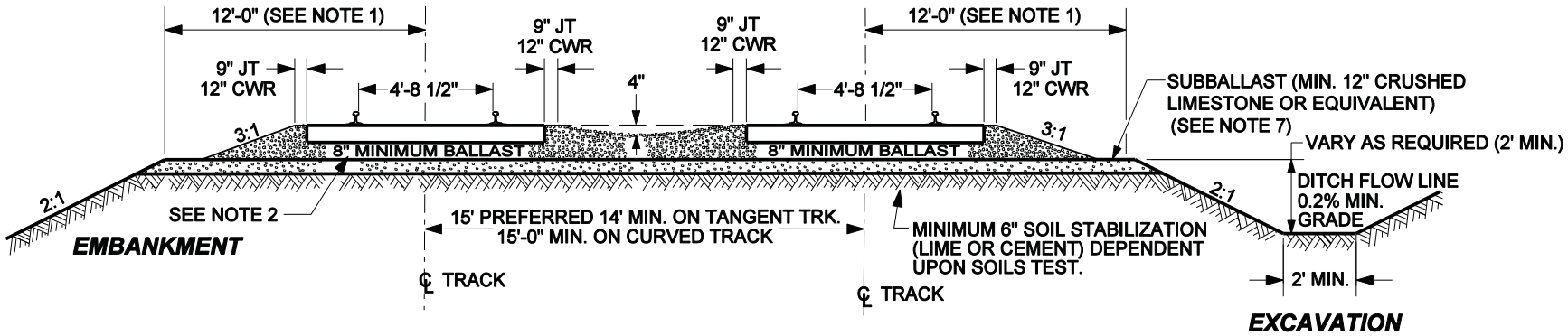

INDUSTRIAL ROADBED FOR TWO OR MORE TRACKS

TYPICAL SECTION

NOTES:

1. 12' SHOULDER WIDTH STANDARD. 11' SHOULDER MUST BE APPROVED BY CHIEF ENGINEER.
2. IF USING CONCRETE TIES - 10" MINIMUM BALLAST UNDER TIES.
3. PREFERABLY TRACKS WILL NOT BE DEPRESSED BELOW GROUND LEVEL PARTICULARLY IN SNOW AND HIGH RUNOFF TERRITORIES, TRACKS CONSTRUCTED AT OR BELOW GROUND LEVEL MUST HAVE FULL STANDARD ROADBED DITCHES.
4. ALL NECESSARY DRAINAGE FACILITIES TO DIVERT RUNOFF WATER AWAY FROM TRACKS ARE TO BE PROVIDED AS APPROVED BY UNION PACIFIC RAILROAD'S CHIEF ENGINEER OF DESIGN.
5. WALKWAYS WILL BE CONSTRUCTED TO COMPLY WITH STATE REQUIREMENTS.
6. THESE STANDARDS DO NOT APPLY TO ORE AND COAL LINES OR OTHER HEAVILY USED TRACKS.
7. REFER TO EXHIBIT "H" IF LESS THAN 12" OF SUBBALLAST IS TO BE USED.

STD DWG 0003

UNION PACIFIC RAILROAD ENGINEERING STANDARDS

ROADBED SECTION FOR INDUSTRIAL TRACK CONSTRUCTION

UNION PACIFIC

ADOPTED: AUG. 31, 2004
REVISED:
FILE NO.: 0003

STD DWG
0003

Copyright © 2004 by Union Pacific Railroad

CONFORMED

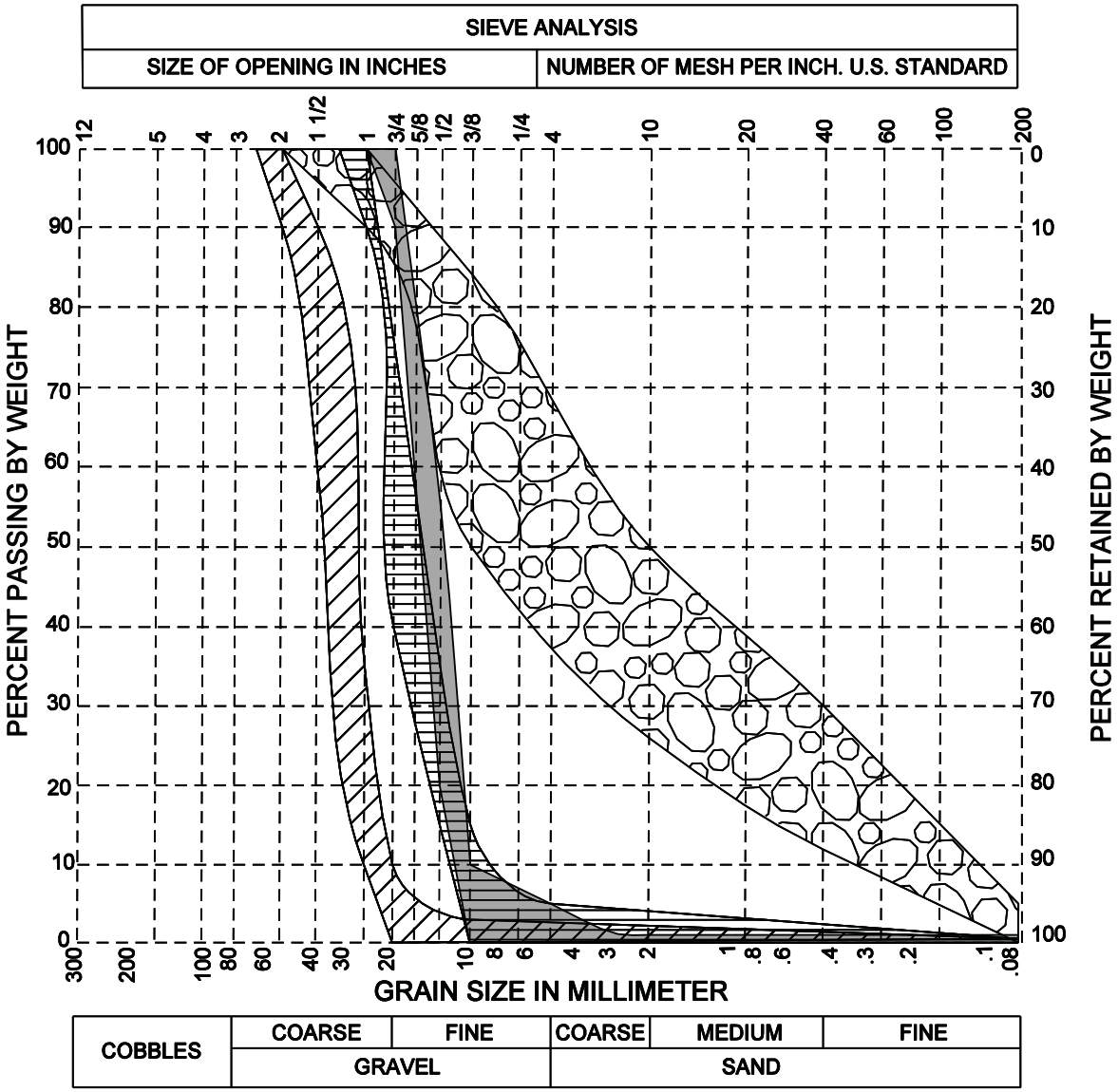

	UP BALLAST CLASS			
	1	2	3	SUB BALLAST
SQUARE OPENING	2"-3/8"	1"- NO. 4	3/4"- NO. 8	1 1/2"-0"
2 1/2"	100	——	——	——
2"	90-100	——	——	100
1 1/2"	50-80	100	——	——
1 1/4"	——	100	——	——
1"	10-35	90-100	100	90-100
3/4"	0-10	40-75	90-100	——
1/2"	0-5	15-35	20-55	——
3/8"	——	0-15	0-10	50-84
No.4	——	0-5	0-5	——
No.8	——	——	0-1	——
No.10	——	——	——	26-50
No.40	——	——	——	12-30
No.200	0-.5	0-.5	0-1	0-5

PERCENT PASSING (BY WEIGHT)
[ALL AGGREGATE SAMPLING AND TESTING PER ASTM LATEST REVISION.]

NOTES:
FOR STANDARD CROSS SECTIONS, SEE STD DWG 0001A, OR STD DWG 0002A.

SELECT MATERIAL TO BE USED AS SUB BALLAST IN POOR NATIVE SOIL CONDITIONS WHERE SPECIFIED BY CHIEF ENGINEER.

CLASS 1 AND CLASS 2 BALLAST MATERIALS ARE REQUIRED TO BE WASHED PRIOR TO LOADING.

CLASS 1 BALLAST FOR MAIN TRACK (OLD "D")

CLASS 2 BALLAST FOR SECONDARY MAIN, BRANCH AND YARD TRACK (OLD "C")

CLASS 3 BALLAST SCREENINGS FOR SIGNAL MOUNDS, ETC..

SELECT MATERIAL (SUB BALLAST - SEE NOTE)

BALLAST CLASS	ITEM NO.
1	562-0766
2	562-1432
3	562-2098
SUB BALLAST	562-5428

UNION PACIFIC RAILROAD ENGINEERING STANDARDS

BALLAST & SUBBALLAST GRADATION TABLE

UNION PACIFIC

APPROVED: VP ENGINEERING
ADOPTED: DEC. 31, 1996
REVISED: JAN. 3, 2011
FILE NO.: 0010E

STD DWG
0010E

STD DWG 0010E

Copyright © 2011 by Union Pacific Railroad

CONFORMED

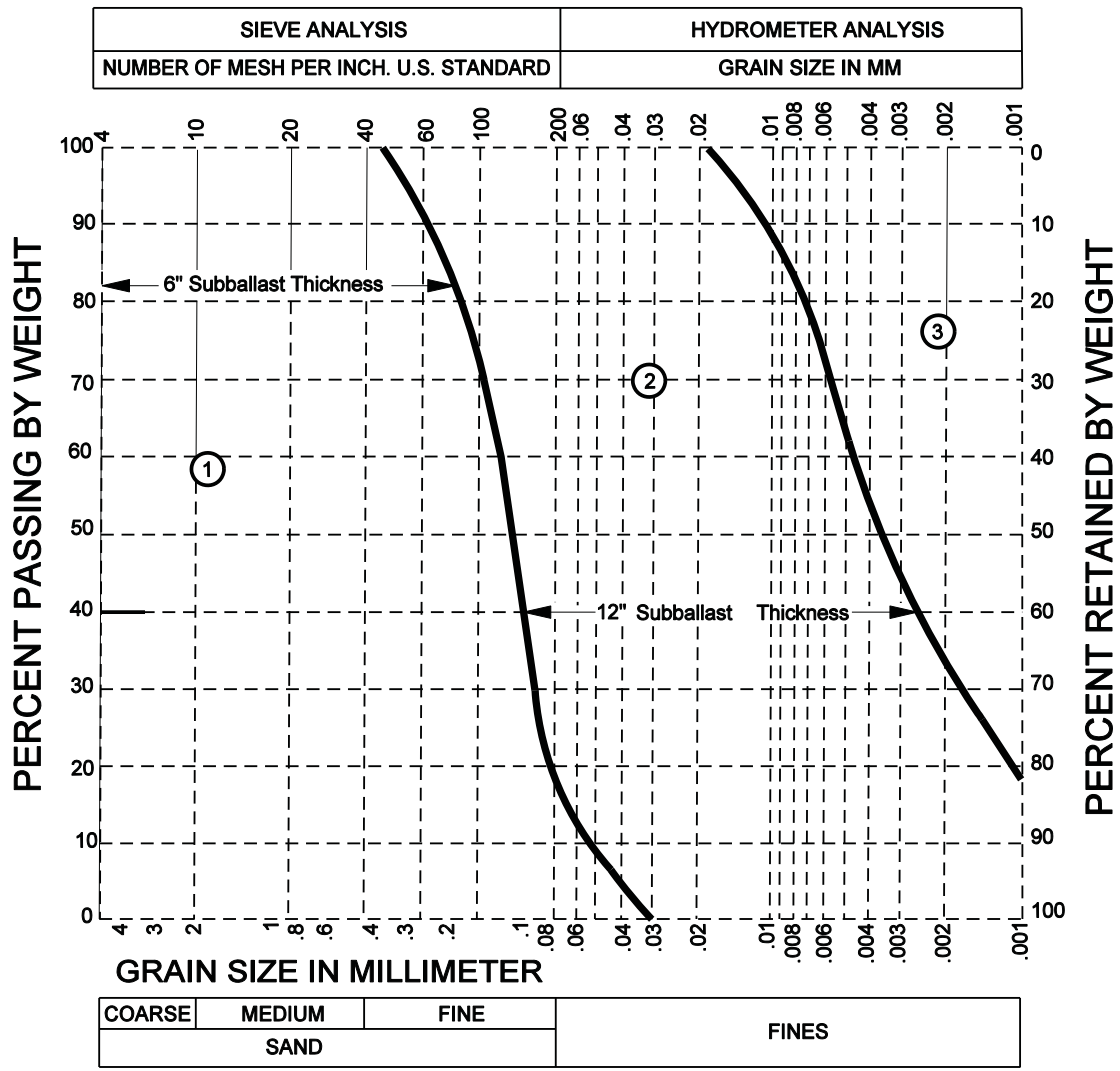

	GRADATION CURVE	
SIEVE SIZE	6" LIMIT	12" LIMIT
No. 40	100	—
No. 60	92	—
No.100	72	—
No. 200	19	—
.015	—	100
.006	—	72
.004	—	54
.001	—	19

PERCENT PASSING (BY WEIGHT)
[ALL AGGREGATE SAMPLING AND TESTING PER ASTM LATEST REVISION.]

(1) Zone of subgrade materials requiring 6" of subballast.

(2) Zone of subgrade materials requiring 12" of subballast.

(3) Additional measures will be required per recommendations of an engineering soils analysis.

UNION PACIFIC RAILROAD ENGINEERING STANDARDS

GRAIN SIZE DISTRIBUTION FOR SUBGRADE SOILS

ADOPTED: JAN. 21, 2004
REVISED: FEB. 13, 2006
FILE NO.: 0013A

STD DWG
0013A

Copyright © 2006 by Union Pacific Railroad

CONFORMED

STD DWG
0013A

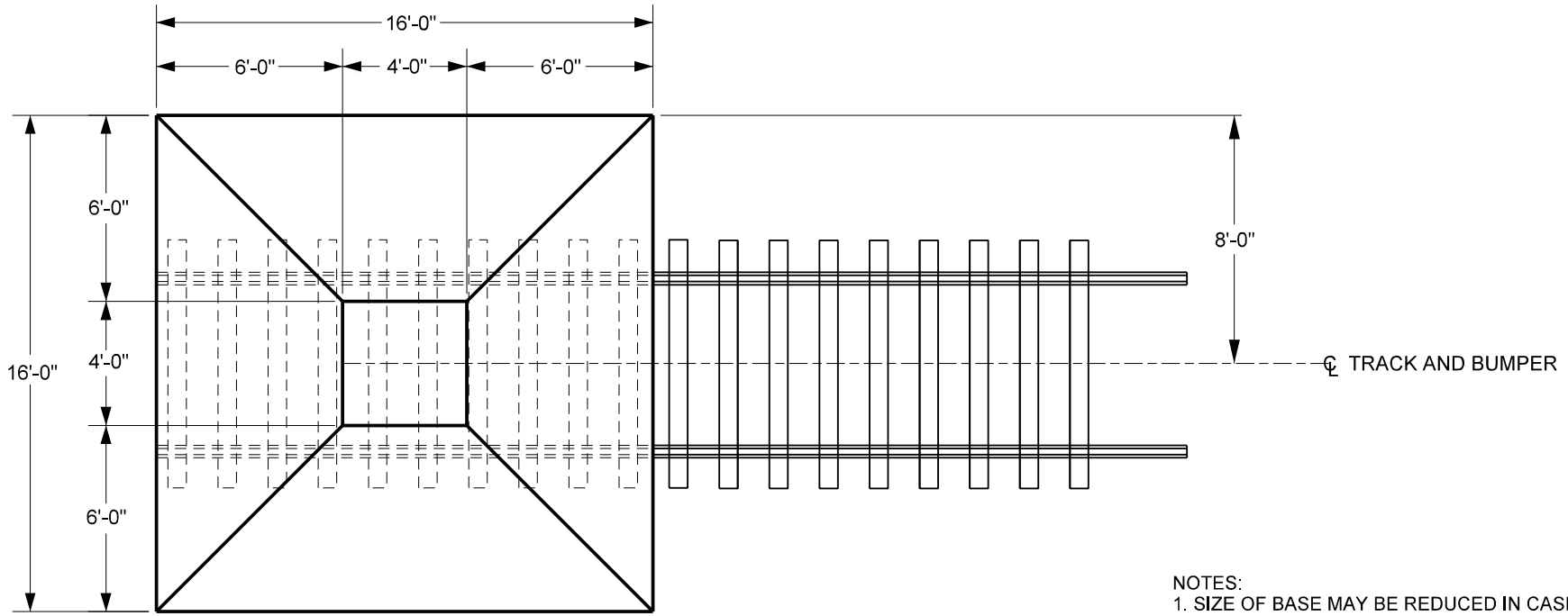

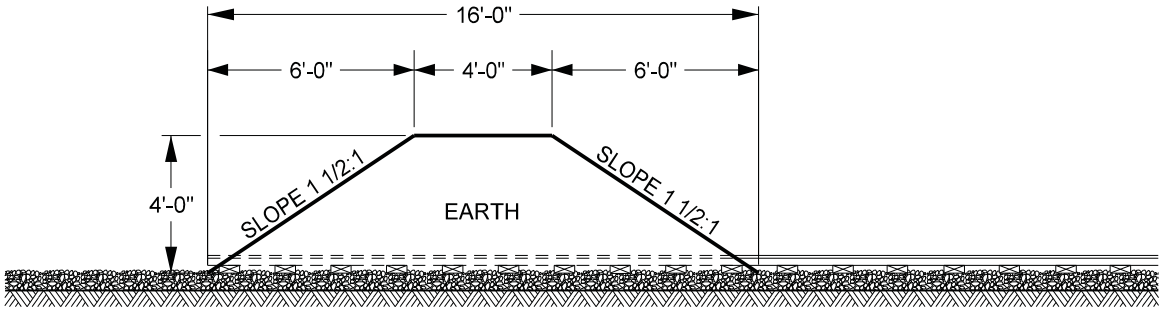

NOTES:

1. SIZE OF BASE MAY BE REDUCED IN CASES WHERE WIDTH OF ROADBED WILL NOT PERMIT PLAN TO BE FOLLOWED.
2. BUMPER TO BE 4'-0" TALL FROM BASE OF TIE.
3. IF TRACK CLEARANCE DOES NOTE ALLOW, BOTTOMS MAY BE SQUARED OFF.
4. EARTHEN BUMPER AS SHOWN HERE ON SHALL BE USED AT ALL LOCATIONS WHERE BUMPER IS REQUIRED EXCEPT ON THE AUTHORITY OF THE CHIEF ENGINEER OF MAINTENANCE TO USE A BUMPER OF SOME OTHER DESIGN.

UNION PACIFIC RAILROAD ENGINEERING STANDARDS

STANDARD EARTH BUMPER FOR END OF SPUR TRACK

APPROVED: VP ENGINEERING
ADOPTED: FEB. 16, 1965
REVISED: SEP. 4, 2012
FILE NO.: 0030B

STD DWG
0030B

STD DWG
0030B

CONFORMED

Copyright © 2012 by Union Pacific Railroad

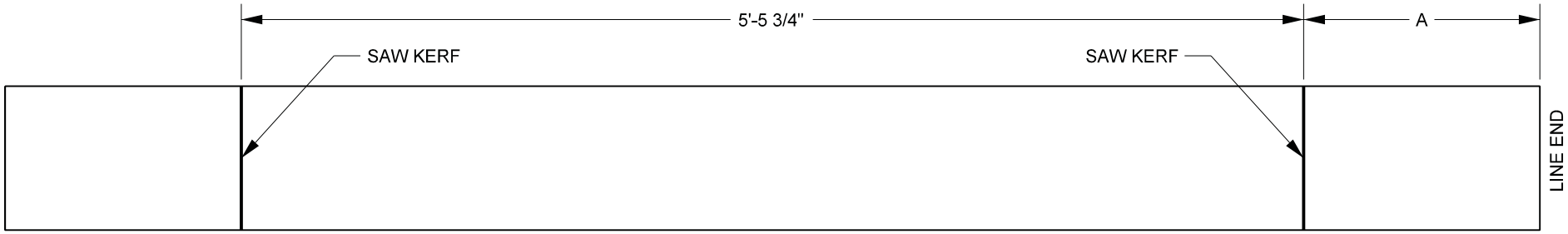

YEAR MANUFACTURED AND TIE PLANT CODE TO BE ON TOP OF TIE

DIMENSIONS FOR SAW KERFS				
PLASTIC	WESTERN SPECIES (SOFTWOOD)	HARDWOOD	TIE LENGTH	"A"
-	502-0798	502-7980	8'-0"	14.75"
-	502-0790	502-7979	8'-6"	17.75"
-	502-0799	502-7991	9'-0"	21.125"

NOTES:
1. ALL TIES TO HAVE SAW KERFS LOCATED ON THE SAP SIDE (TOP) OF TIES.

2. SAW KERF TO BE MAXIMUM OF 1/4" WIDE X 1/4" DEEP.

UNION PACIFIC RAILROAD ENGINEERING STANDARDS

WOOD AND COMPOSITE CROSS TIES

ADOPTED: DEC. 31, 1996
REVISED: JAN. 22, 2013
FILE NO.: 0210E

STD DWG
0210E

STD DWG
0210E

CONFORMED

Copyright © 2013 by Union Pacific Railroad

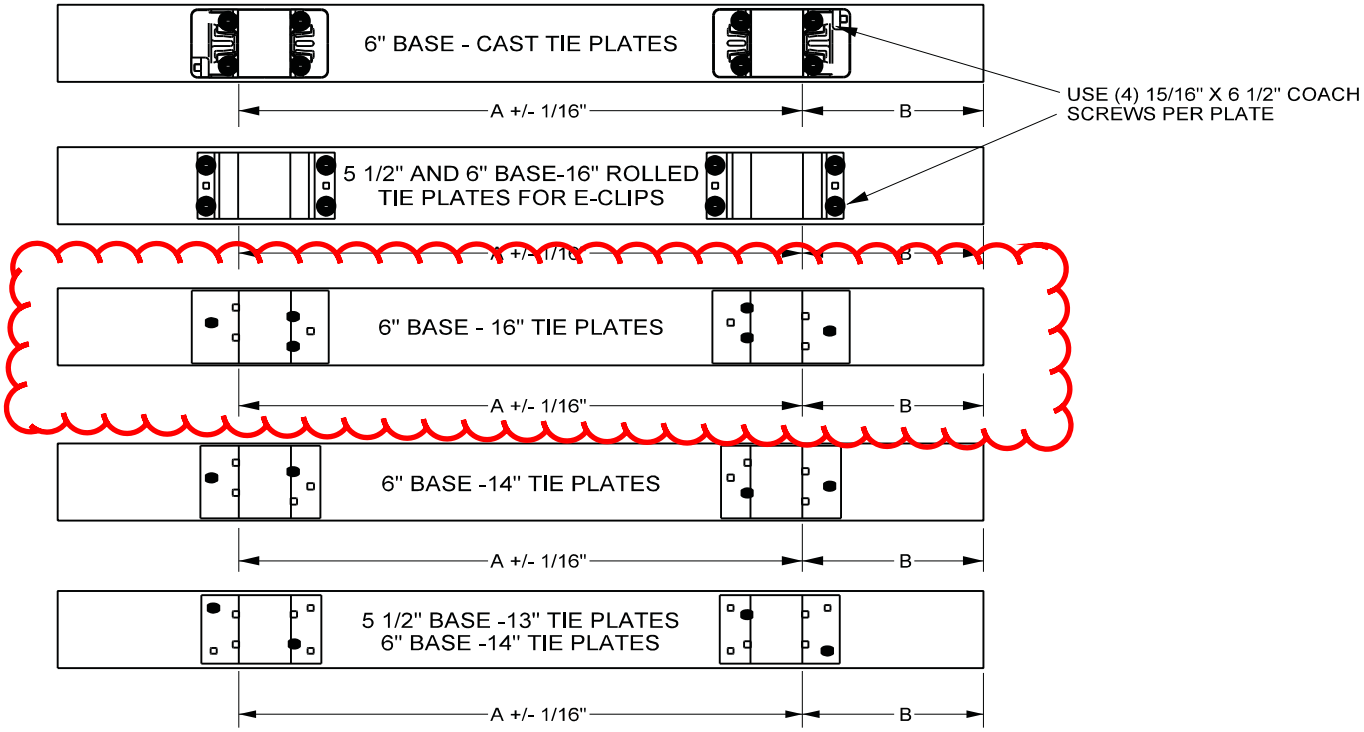

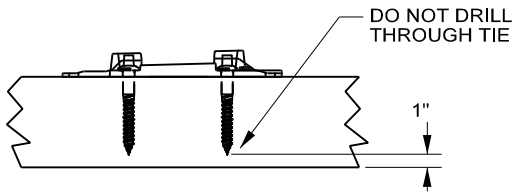

COACH SCREW CLEARANCE

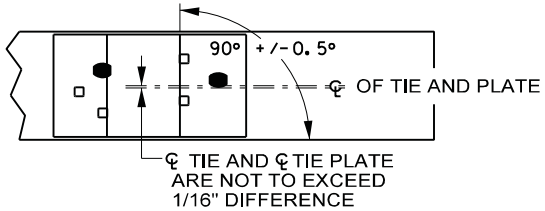

TYP. PLATE ALIGNMENT

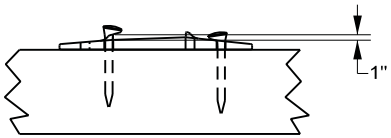

GAGE SPIKE CLEARANCE

NOTES:
PRE-BORED HOLES NECESSARY TO INSTALL COACH SCREWS WITH RESILIENT FASTENER TIE PLATES DRILLED TO ONE HALF INCH FROM BOTTOM OF THE TIE, USING FOLLOWING PRE-BORED DIAMETERS:
- 11/16"-SOFT WOOD TIES
- 3/4"-HARD WOOD & COMPOSITE TIES
- 13/16"-AZOBE TIES

RAIL GAGE SPIKES WILL HAVE 1" CLEARANCE BETWEEN RAIL SEAT AND UNDERSIDE OF SPIKE HEAD.

UNION PACIFIC RAILROAD ENGINEERING STANDARDS

PREPLATING DIMENSIONS FOR WOOD TIES

ADOPTED: DEC. 31, 1996
REVISED: NOV. 15, 2013
FILE NO.: 0211I

STD DWG
0211I
PAGE 1 OF 2

STD DWG
0211I
PAGE 1 OF 2

CONFORMED

Copyright © 2013 by Union Pacific Railroad

RAIL SIZE (ALL TIES 7" X 9")	QUANTITY SPIKES OR SCREWS	TIE PLATE	A	TIE PLATE	TIE LENGTH	B	ITEM NUMBER	
							HARDWOOD NEW PLATE	HARDWOOD SECONDHAND PLATE
5 1/2" BASE	4 SPIKES	13" SPIKE 8 HOLE MP-13	65"	554-3779-2	8'	15 1/2"	-	502-9793
					8'-6"	18 1/2"	-	502-7981
					9'	21 1/2"	-	502-9700
	8 SCREWS	15" ROLLED FOR E-CLIPS	65"	503-6342-0	8'-6"	18 1/2"	502-7902	-
					9'	21 1/2"	502-7976	-
					10'	27 1/2"	502-7975	-
6" BASE	4 SPIKES	14" SPIKE 8 HOLE MP-14	65 3/4"	554-4445-2 OR 554-3223-2	8'	15 1/8"	-	502-9787
					8'-6"	18 1/8"	-	502-6895
					9'	21 1/8"	-	502-9706
	4 SPIKES	14" SPIKE 6 HOLE BN/UP	65 3/4"	554-3230-0	8'	15 1/8"	502-7973	-
					8'-6"	18 1/8"	502-7974	-
					9'	21 1/8"	502-7977	-
	6 SPIKES	16" SPIKE 6 HOLE	65 3/4"	554-3240-0	8'-6"	18 1/8"	502-6896	-
					9'	21 1/8"	502-9797	-
					10'	27 1/8"	502-1024	-
	4 SPIKES	16" SPIKE 6 HOLE	65 3/4"	554-3240-2	8'-6"	18 1/8"	-	502-6898
					9'	21 1/8"	-	502-6952
					10'	27 1/8"	-	502-1026
	4 SPIKES	16" SPIKE 6 HOLE UP-16	65 3/4"	544-5334-2	8'-6"	18 1/8"	-	502-6899
					9'	21 1/8"	-	502-6950
					10'	27 1/8"	-	502-1028
	8 SCREWS	16" CAST SAFELOK CLIPS	65 3/4"	503-6219-0	8'-6"	18 1/8"	502-7901	-
					9'	21 1/8"	502-9799	-
					10'	27 1/8"	502-1020	-
	8 SCREWS	16" CAST SAFELOK CLIPS	65 3/4"	503-6219-2	8'-6"	18 1/8"	-	502-6900
					9'	21 1/8"	-	502-9802
					10'	27 1/8"	-	502-1022
	8 SCREWS	16" ROLLED FOR E-CLIPS	65 3/4"	503-9020-0	8'-6"	18 1/8"	502-7966	-
					9'	21 1/8"	502-7888	-
					10'	27 1/8"	502-7999	-

UNION PACIFIC RAILROAD ENGINEERING STANDARDS

PREPLATING DIMENSIONS FOR WOOD TIES

ADOPTED: DEC. 31, 1996
REVISED: NOV. 15, 2013
FILE NO.: 0211I

STD DWG
0211I
PAGE 1 OF 2

STD DWG
0211I
PAGE 1 OF 2

CONFORMED

Copyright © 2013 by Union Pacific Railroad

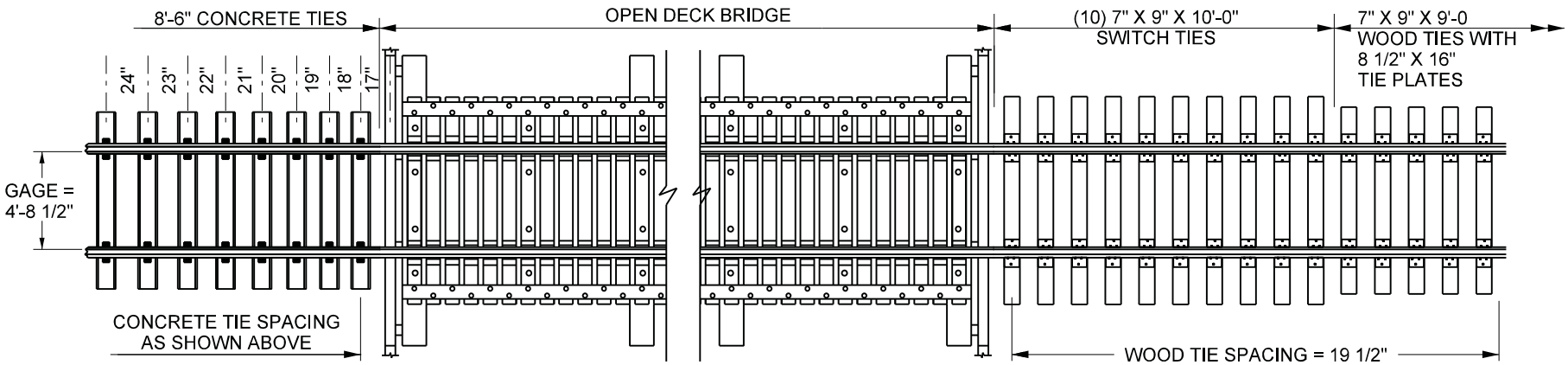

TO CONCRETE TRACK **OPEN DECK BRIDGE** **TO WOOD TRACK**

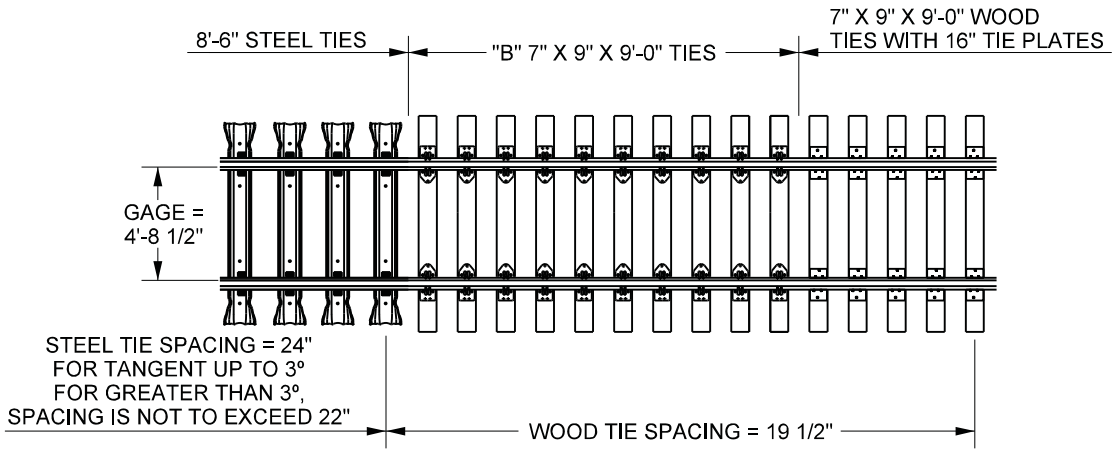

STEEL TIE TO WOOD

NOTES:

1. TRANSITION ZONES ARE REQUIRED ON ALL TRACKS WHERE MAXIMUM AUTHORIZED SPEED IS 20 MPH OR GREATER.

EXCEPTION 1: MAKING TRANSITION FROM PREMIUM WOOD TURNOUTS TO CONVENTIONAL WOOD TRACK IS REQUIRED WHEN TRACK SPEED EXCEEDS 40MPH..

2. TRANSITIONS BETWEEN CONCRETE OR STEEL TIES AND WOOD TIES SHOULD NOT BE MADE WHERE CURVATURE OR OBSTRUCTIONS SUCH AS CROSSINGS EXISTS. INSTEAD, CONCRETE OR STEEL TIES SHOULD BE EXTENDED THROUGH THE OBSTRUCTION OR CURVE BEFORE INSTALLING TRANSITION.

EXCEPTION 2: STEEL TUNNEL TIES ARE NOT TO BE INSTALLED OUTSIDE OF TUNNEL.

3. SEE PAGES 2 AND 3 FOR MORE DETAILS.

		MAXIMUM AUTHORIZED TRACK SPEED		
	TIE TYPE	0-29 MPH	30 TO 49 MPH	50 MPH AND GREATER
QTY REQ'D	"B"	10	10	10

TIE TYPE REQUIRED

"B" - 7" X 9" X 9'-0" PREPLATED TIE UPRR ITEM #502-9799
(4) SAFELOK CLIPS UPRR ITEM #503-5100

CONFORMED

UNION PACIFIC RAILROAD ENGINEERING STANDARDS

STANDARD TRANSITION ZONES

ADOPTED: JAN. 24, 1997
REVISED: FEB. 19, 2013
FILE NO.: 0220F

STD DWG
0220F
PAGE 1 OF 3

Copyright © 2013 by Union Pacific Railroad

STD DWG
0220F
PAGE 1 OF 3

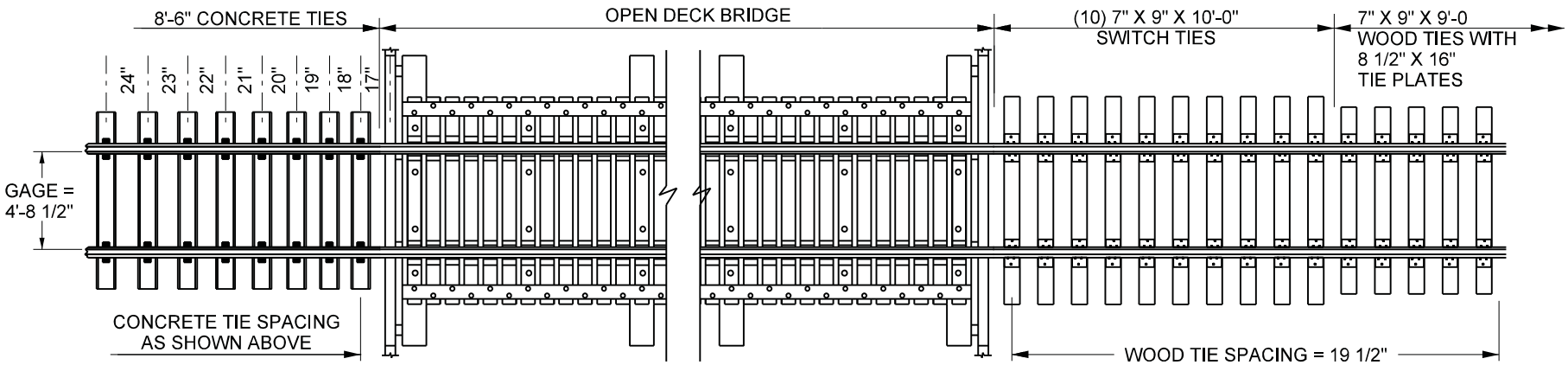

TO CONCRETE TRACK **OPEN DECK BRIDGE** **TO WOOD TRACK**

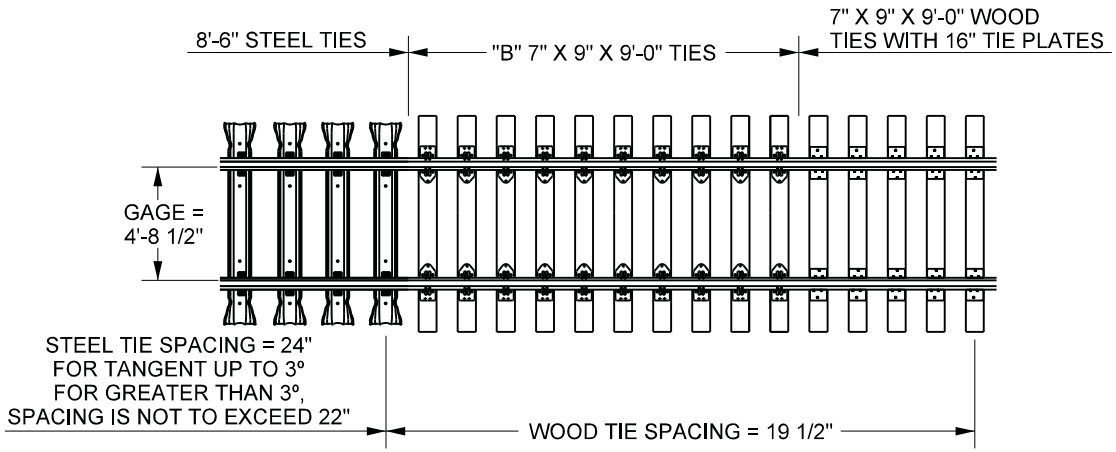

STEEL TIE TO WOOD

NOTES:

1. TRANSITION ZONES ARE REQUIRED ON ALL TRACKS WHERE MAXIMUM AUTHORIZED SPEED IS 20 MPH OR GREATER.

EXCEPTION 1: MAKING TRANSITION FROM PREMIUM WOOD TURNOUTS TO CONVENTIONAL WOOD TRACK IS REQUIRED WHEN TRACK SPEED EXCEEDS 40MPH..

2. TRANSITIONS BETWEEN CONCRETE OR STEEL TIES AND WOOD TIES SHOULD NOT BE MADE WHERE CURVATURE OR OBSTRUCTIONS SUCH AS CROSSINGS EXISTS. INSTEAD, CONCRETE OR STEEL TIES SHOULD BE EXTENDED THROUGH THE OBSTRUCTION OR CURVE BEFORE INSTALLING TRANSITION.

EXCEPTION 2: STEEL TUNNEL TIES ARE NOT TO BE INSTALLED OUTSIDE OF TUNNEL.

3. SEE PAGES 2 AND 3 FOR MORE DETAILS.

		MAXIMUM AUTHORIZED TRACK SPEED		
	TIE TYPE	0-29 MPH	30 TO 49 MPH	50 MPH AND GREATER
QTY REQ'D	"B"	10	10	10

TIE TYPE REQUIRED

"B" - 7" X 9" X 9'-0" PREPLATED TIE UPRR ITEM #502-9799
(4) SAFELOK CLIPS UPRR ITEM #503-5100

CONFORMED

UNION PACIFIC RAILROAD ENGINEERING STANDARDS

STANDARD TRANSITION ZONES

ADOPTED: JAN. 24, 1997
REVISED: FEB. 19, 2013
FILE NO.: 0220F

STD DWG
0220F
PAGE 1 OF 3

Copyright © 2013 by Union Pacific Railroad

STD DWG
0220F
PAGE 1 OF 3

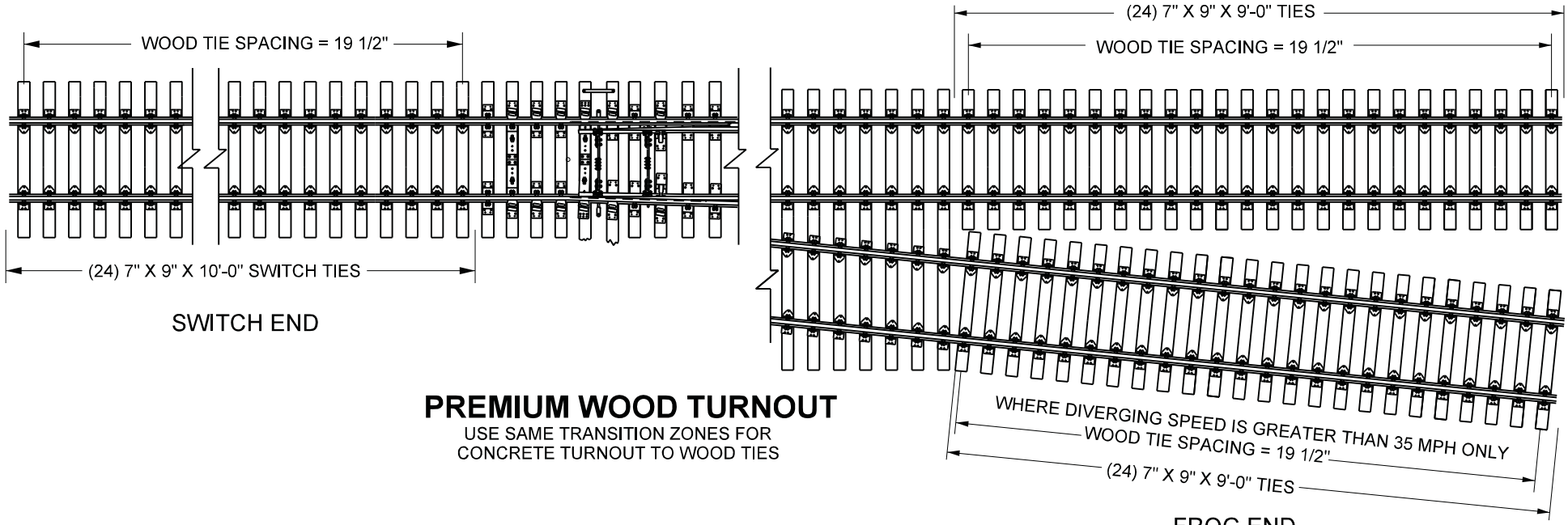

PREMIUM WOOD TURNOUT

USE SAME TRANSITION ZONES FOR
CONCRETE TURNOUT TO WOOD TIES

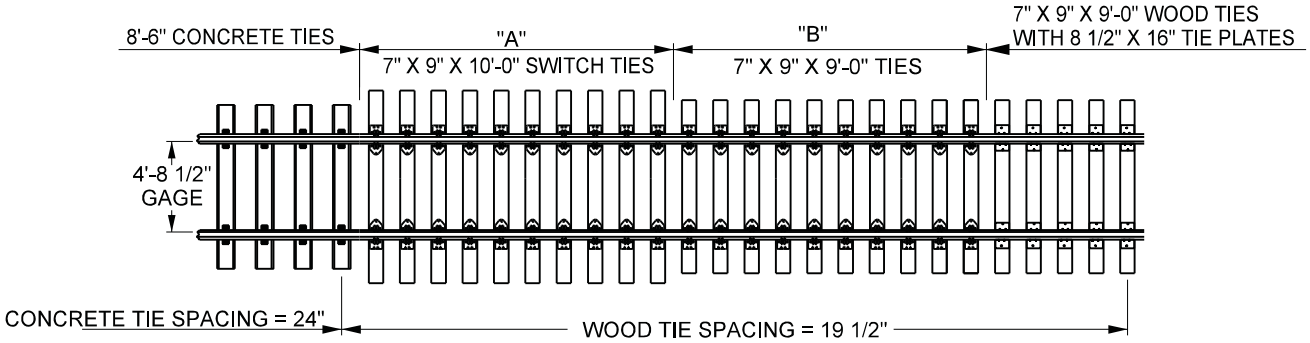

CONCRETE TIE TO WOOD

NOTES:

1) FOR CONCRETE TURNOUTS INSTALLED IN WOOD TIE TRACK, UTILIZE THE CONCRETE TIE TO WOOD TRANSITION SHOWN OFF THE LAST LONG CONCRETE TIE.

2. SEE PAGES 1 AND 3 FOR NOTES AND MORE DETAILS.

		MAXIMUM AUTHORIZED TRACK SPEED		
	TIE TYPE	0-29 MPH	30 TO 49 MPH	50 MPH AND GREATER
QTY REQ'D	"A"	0	10	20
	"B"	10	10	10

TIE TYPE REQUIRED

"A" - 7" X 9" X 10'-0" PREPLATED SWITCH TIE UPRR ITEM #502-1020
(4) SAFELOK CLIPS UPRR ITEM #503-5100

"B" - 7" X 9" X 9'-0" PREPLATED TIE UPRR ITEM #502-9799
(4) SAFELOK CLIPS UPRR ITEM #503-5100

CONFORMED

UNION PACIFIC RAILROAD
ENGINEERING STANDARDS

STANDARD TRANSITION ZONES

ADOPTED: JAN. 24, 1997
REVISED: FEB. 19, 2013
FILE NO.: 0220F

STD DWG
0220F
PAGE 2 OF 3

Copyright © 2013 by Union Pacific Railroad

STD DWG
0220F
PAGE 2 OF 3

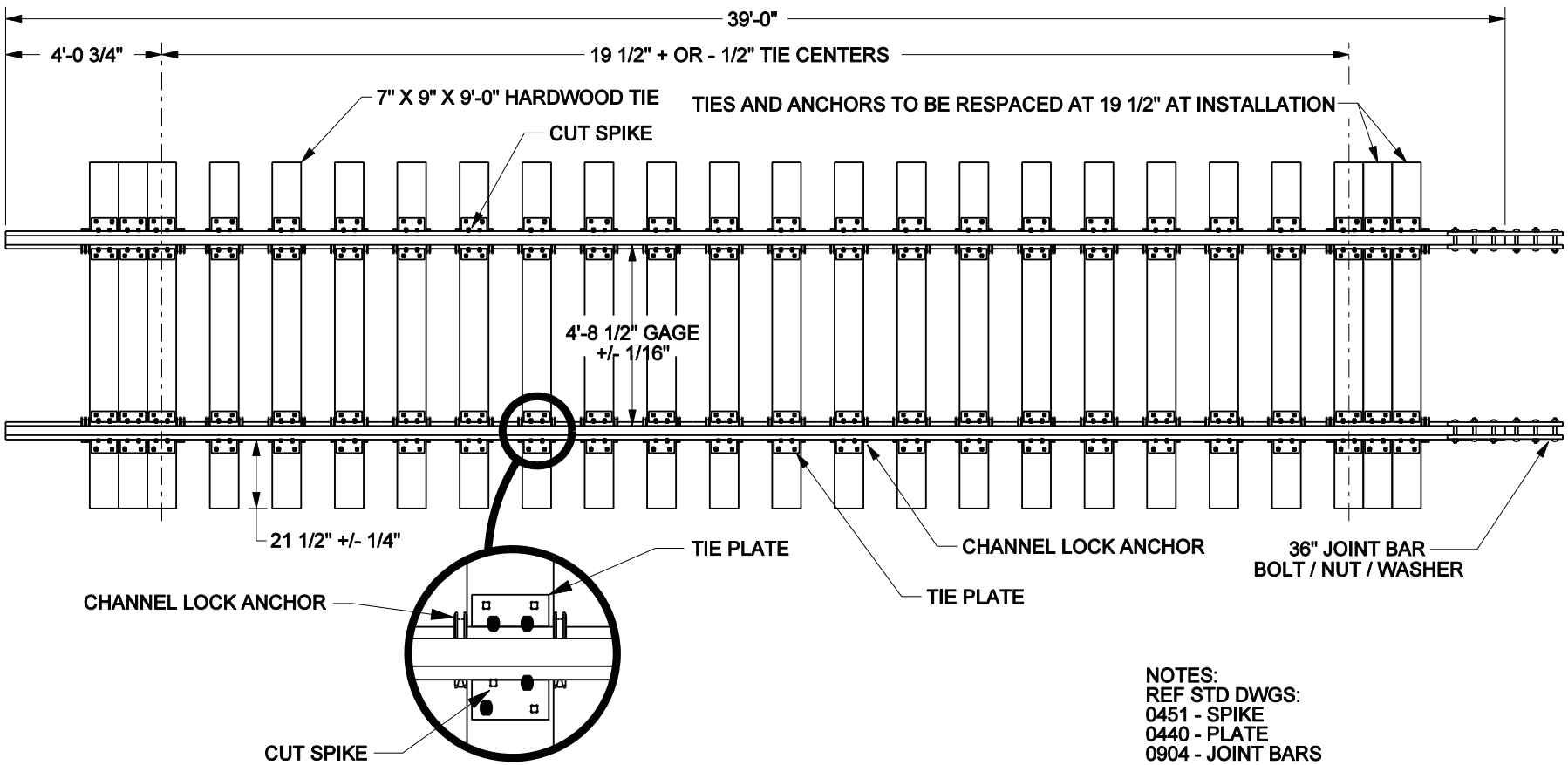

NOTES:
REF STD DWGS:
0451 - SPIKE
0440 - PLATE
0904 - JOINT BARS
0950 - TRACK BOLTS
0720 - RAIL
0457 - ANCHOR

BILL OF MATERIAL	
QTY.	ITEM.
192 EA.	SPIKE
48 EA.	TIE PLATE
04 EA.	JOINT BAR 36"
12 EA	BOLT (1" X 6") / NUT / WASHER
78 FT.	115 LB. RAIL DBE 3 1/2 X 6 X 6
92 EA.	CHANNEL LOCK ANCHOR 5 1/2"
24 EA.	TIES 7" X 9" X 9'-0" HARDWOOD

UNION PACIFIC RAILROAD
ENGINEERING STANDARDS

115 LB WOOD TRACK PANEL

ITEM NO. 561-0798

ADOPTED: APRIL 9, 2001
REVISED:
FILE NO.: 0251

STD DWG 0251

STD DWG 0251

Copyright © 2001 by Union Pacific Railroad

CONFORMED

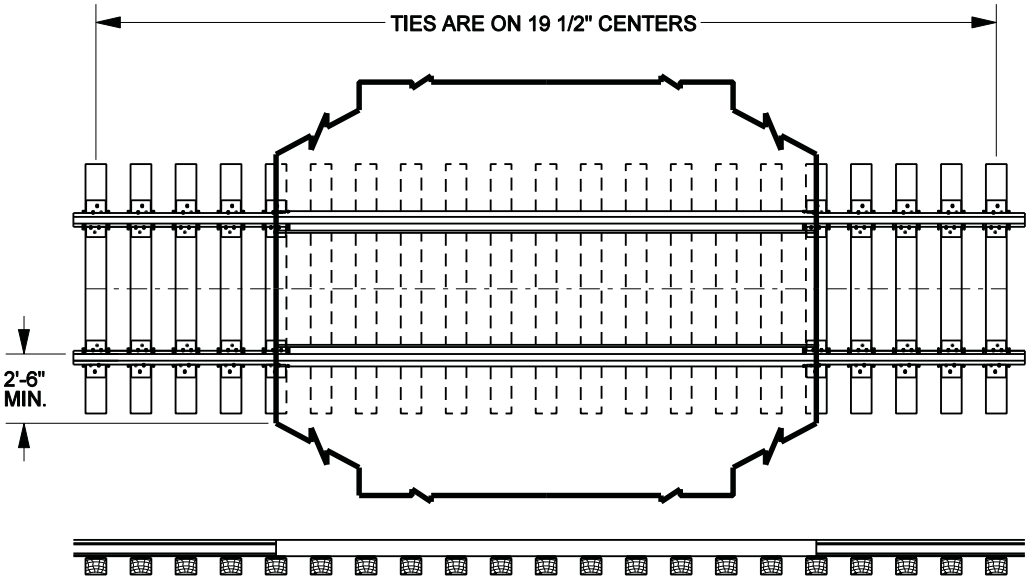

NOTE: SEE STD DWG 0301 FOR DRAINAGE DETAILS

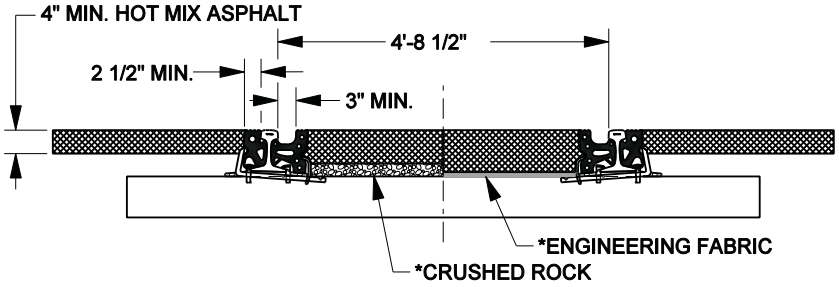

*ENGINEERING FABRIC OR 2" OF CRUSHED ROCK MUST BE USED TO PREVENT HOT MIX ASPHALT FROM BONDING TO TIES

CROSS SECTION DETAIL

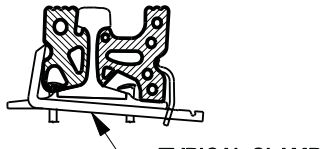

SEAL SECTION

ORDERING NOTE:
RUBBER RAIL SEAL CROSSING SECTIONS ARE TO BE ORDERED BY "TRACK FEET" IN 8'-0" INCREMENTS. EACH 8'-0" INCREMENT WILL INCLUDE (2) GAGE & (2) FIELD SIDE RAIL SEAL SECTIONS, (10) CLAMPS & ANY REQUIRED HARDWARE TO CONNECT THE SECTIONS TOGETHER.

RAIL SIZE	ITEM NO.
112-115 LB.	540-0206
132-141 LB.	540-1290

NOTES:

1) USE OF THIS STANDARD FOR NEW CONSTRUCTION IS LIMITED TO INDUSTRIAL LEAD TRACKS, AND SPUR TRACKS WHERE THE AVERAGE DAILY TRAFFIC VOLUME DOES NOT EXCEED 500. USE ON MAIN LINES IS RESTRICTED TO TEMPORARY REPAIRS TO EXISTING CROSSINGS SURFACES.

2) CROSSING SITE IS TO BE INSPECTED PRIOR TO START OF INSTALLATION TO DETERMINE THAT PROPER DRAINAGE AND SURFACE SUPPORT IS PROVIDED, TRACK GRADE IS UNIFORM.

3) FOR COMPLETE RENEWAL OF CROSSING & NEW CONSTRUCTION: TRACK STRUCTURE INCLUDING RAIL, OTM, TIES, BALLAST, AND ROADBED MUST BE IN EXCELLENT CONDITION. ALL TIES MUST BE 9 FT. LONG, SPACED AT 19 1/2" CENTERS AND EXTEND 5 TIES BEYOND END OF CROSSING. NEW 7"X9"X9' TRACK TIES TO BE INSTALLED IF NECESSARY. IF CONDITIONS WARRANT, SITE IS TO BE OVER-EXCAVATED AND CROSSING DRAINAGE SYSTEM INSTALLED USING COMPACTED, WELL-GRADED GRANULAR FILL; SUBBALLAST, GEOTEXTILE, AND PERFORATED DRAINAGE PIPE (IF REQUIRED) INSTALLED PER DETAILS OF THIS DRAWING. ADDITIONAL SITE DRAINAGE INCLUDING PROPER DRAINAGE AT EACH QUADRANT OF CROSSING SHALL BE COMPLETED TO ENSURE CROSSING DRAINAGE. SUBBALLAST SECTION TO BE A MINIMUM OF 4" WHEN COMPLETE RENEWAL OF EXISTING CROSSING. FOR NEW CONSTRUCTION, SUBBALLAST SECTION TO BE IN ACCORDANCE WITH CONSTRUCTION DESIGN STANDARDS OR AS REQUIRED BY STATE OR LOCAL AGENCIES. USE OF GEOTEXTILE AND DRAINAGE PIPE TO BE ONLY AT LOCATIONS WHERE REQUIRED BY STATE OR LOCAL AGENCIES OR WHERE SPECIFICALLY DESIGNATED BY CHIEF ENGINEER.

4) IN ALL INSTALLATIONS THE RAIL JOINTS SHOULD FALL OUTSIDE THE CROSSING AREA A MINIMUM OF 15 FEET FROM THE END OF THE CROSSING.

5) USE OF CLAMPS ARE REQUIRED IN EACH TIE CRIB WITHIN THE LIMITS OF THE CROSSING. CLAMPS MUST BE ATTACHED PRIOR TO PLACEMENT OF ASPHALTIC CONCRETE (SEE SECTION DETAILS).

6) HOT MIX ASPHALTIC CONCRETE MUST COMPLY WITH STATE D.O.T. SPECIFICATIONS AND BE PLACED IN 2 INCHES MINIMUM & 4 INCHES MAXIMUM LIFTS. CARE MUST BE TAKEN DURING COMPACTION OF ASPHALT TO PREVENT DAMAGE TO HOLD DOWN CLAMPS OR RUBBER. ASPHALT SHOULD BE ROLLED PARALLEL TO THE RAIL UNTIL THE FINAL LIFT AND COMPACTION. FINAL LIFT OF ASPHALT IS TO BE LEVEL WITH THE TOP OF RAIL FOR 30 INCHES FROM THE FIELD SIDE OF THE RAIL.

7) SLOPE EDGE OF PAVING TO RETURN TO ORIGINAL EDGE OF PAVING ALIGNMENT. LENGTH OF TRANSITION WILL DEPEND ON LOCAL CONDITIONS.

8) AT THE TIE-IN POINT WITH THE EXISTING PAVEMENT, THE OLD PAVEMENT MUST BE CUT DOWN A MINIMUM 2" TO ELIMINATE A FEATHER EDGE ON THE NEW PAVEMENT.

9) USE STATE D.O.T. SPECIFICATION FOR THE ASPHALT SPRAY TACK COAT.

10) ENVIRONMENTAL RULES OF THE GOVERNMENT BODY HAVING AUTHORITY WILL BE FOLLOWED WHEN DISPOSING OF THE PAVEMENT REMOVED FROM THE CROSSING.

11) MATERIAL USED ON GAGE SIDE RAIL SEAL SHALL HAVE AN ELECTRICAL RESISTANCE OF A MINIMUM OF 10 MEGOHMS AT 500 VOLTS DC.

12) REPORT CROSSING GATE MALFUNCTIONS TO 24 HR UPRR CROSSING HOT LINE AT 1-800-848-8715.

13) ALL EXCEPTIONS TO THIS PLAN MUST BE APPROVED BY THE CHIEF ENGINEER.

UNION PACIFIC RAILROAD ENGINEERING STANDARDS

LIGHT DUTY ROAD CROSSING ASPHALT WITH RUBBER SEAL SECTIONS

UNION PACIFIC

ADOPTED: FEB. 3, 2001
REVISED: DEC. 17, 2001
FILE NO.: 0302A

STD DWG
0302A

STD DWG
0302A

Copyright © 2001 by Union Pacific Railroad

CONFORMED

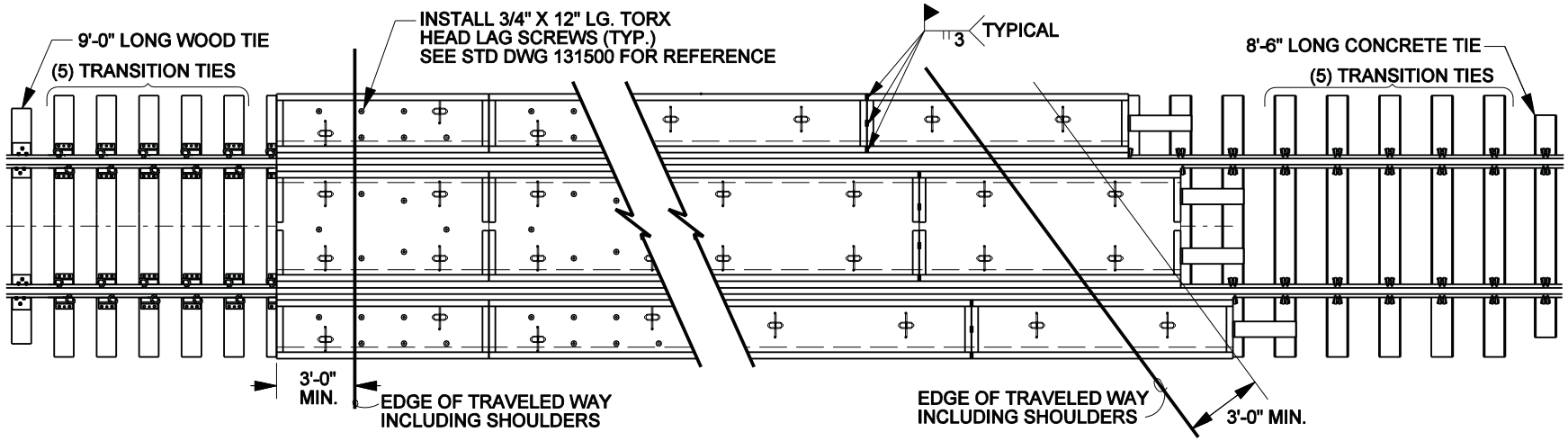

PLAN VIEW OF PANEL WITH TIMBER TIES

PLAN VIEW OF PANEL & JOINT WELD LOCATION W/CONCRETE TIES

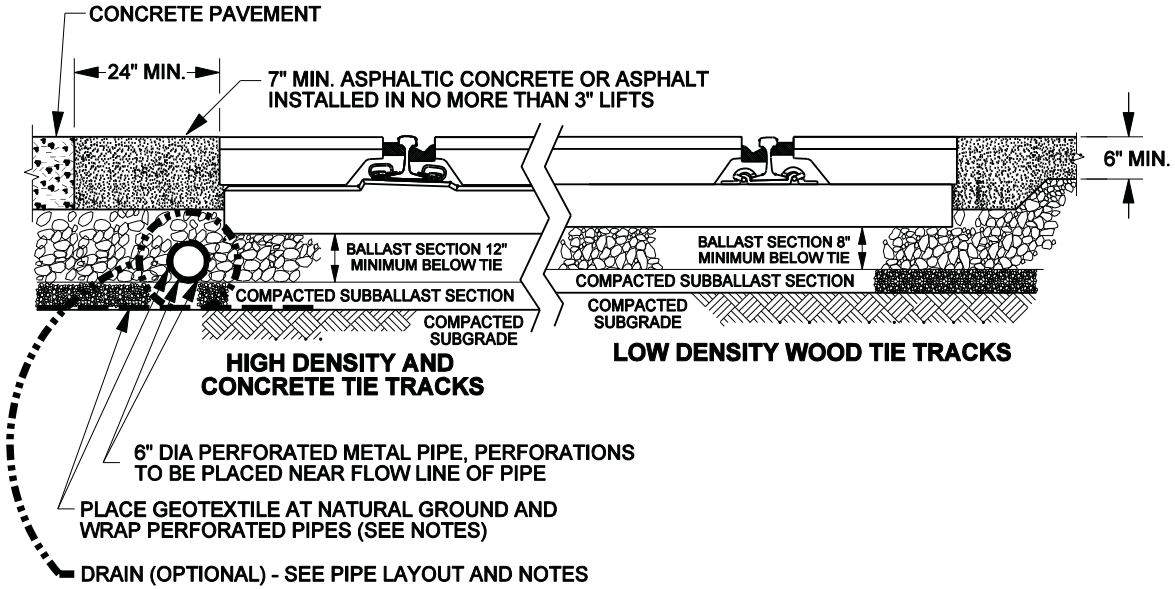

TYPICAL BALLAST AND ASPHALT DETAIL

NOTES:
SEE PAGE 2 FOR NOTES AND MORE DETAILS.

UNION PACIFIC RAILROAD ENGINEERING STANDARDS

INSTALLATION OF ROAD CROSSINGS W/ PRECAST CONCRETE PANELS

APPROVED: VP ENGINEERING
ADOPTED: DEC. 19, 1987
REVISED: JAN. 17, 2011
FILE NO.: 0304H

STD DWG
0304H
PAGE 1 OF 2

STD DWG
0304H
PAGE 1 OF 2

Copyright © 2011 by Union Pacific Railroad

CONFORMED

NOTES:

1. CROSSING PANEL SUPPORT THROUGH THE CROSSING MUST BE UNIFORM. CONCRETE TIE SPACING IS TO BE A MAXIMUM OF 24" CENTER TO CENTER. WOOD TIE SPACING TO BE MAXIMUM OF 19 1/2" CENTER TO CENTER. TIE SPACING MUST BE ADJUSTED TO SUPPORT THE ENDS OF THE PANELS

2. CROSSING SITE IS TO BE INSPECTED PRIOR TO START OF INSTALLATION TO DETERMINE THAT PROPER DRAINAGE AND SURFACE SUPPORT IS PROVIDED, TRACK GRADE IS UNIFORM AND EXISTING TIES ARE AT LEAST 10' LONG.

3. IF CONDITIONS WARRANT, SITE IS TO BE OVER-EXCAVATED AND CROSSING DRAINAGE SYSTEM INSTALLED USING COMPACTED, WELL GRADED GRANULAR FILL; SUBBALLAST, GEOTEXTILE AND PERFORATED DRAINAGE PIPE (IF REQUIRED) INSTALLED PER DETAILS OF THIS DRAWING.

4. ADDITIONAL SITE DRAINAGE INCLUDING PROPER DRAINAGE AT EACH QUADRANT OF CROSSING SHALL BE COMPLETED TO ENSURE CROSSING DRAINAGE.

5. PRECAST PANELS ARE TO BE HANDLED AND SUPPORTED AT SPECIFIED LIFTING INSERT LOCATIONS ONLY. LIFTING EQUIPMENT AND CONNECTION INSERTS ARE TO BE PROPERLY SIZED TO HANDLE THE LENGTH OF PANELS BEING INSTALLED. RING LIFTING DEVICES ARE AVAILABLE FROM COMPANY WAREHOUSE

6. APPROACH ASPHALT ROADWAY PAVING IS TO MEET STATE DOT HIGHWAY SPECIFICATIONS AND INSTALLED ACCORDINGLY. ASPHALT IS TO BE INSTALLED WITH PAVER WITH MAXIMUM 3" LIFTS AND LAID PARALLEL TO CROSSING TO MINIMIZE APPROACH SETTLEMENTS.

7. GEOTEXTILE AND PIPE TO BE INSTALLED ONLY AT LOCATIONS WHERE REQUIRED BY STATE OR LOCAL AGENCIES OR WHERE DESIGNATED BY CHIEF ENGINEER.

8. GALVANIZED ELASTIC FASTENERS ARE TO BE USED WITHIN THE CROSSING AREA. PANDROL E-CLIPS TO BE USED ON WOOD TIE CROSSINGS AND SAFELOK CLIPS ON CONCRETE TIE CROSSINGS.

9. ALL RAIL JOINTS IN CROSSING AREA TO BE WELDED, DO NOT INSTALL BOLTED JOINT BARS.

10. REPORT CROSSING GATE MALFUNCTIONS TO 24 HR UPRR CROSSING HOT LINE AT 1-800-848-8715.

11. ALL EXCEPTIONS TO THIS PLAN MUST BE APPROVED BY THE CHIEF ENGINEER.

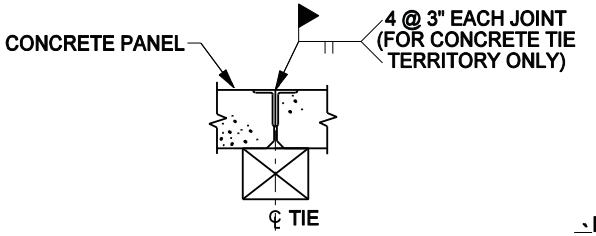

JOINT BETWEEN PANELS

INTERIOR JOINTS BETWEEN PANELS MUST REST ON CENTER LINE OF A WOOD OR CONCRETE TIE AS SHOWN

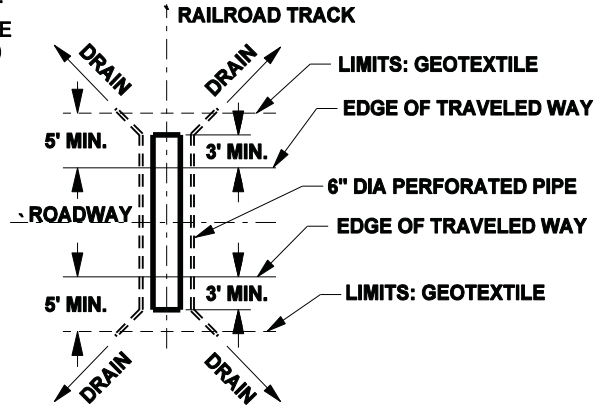

TYPICAL PIPE LAYOUT

NOTE:
GEOTEXTILE & PIPE TO BE INSTALLED ONLY AT LOCATIONS WHERE REQUIRED BY STATE OR LOCAL AGENCIES OR WHERE DESIGNATED BY CHIEF ENGINEER.

REQUIRED COMPONENTS	
RING LIFTING DEVICE	410-1371
3/4" TORX SCREW FOR WOOD TIES (STD DWG 131500)	130-5400
ELASTOMERIC BEARING PAD FOR 141 LB. RAIL ON WOOD TIES	540-0203
CONFORMAL ELASTOMERIC BEARING PAD FOR 10'-0" CONCRETE TIES	503-6315
CONFORMAL ELASTOMERIC BEARING PAD FOR 8'-6" CONCRETE TIES	503-6312
END RESTRAINT FOR CONCRETE TIES (ONLY)	540-1925

OPTIONAL COMPONENTS (SET INCLUDES 6 PIECES)	
20' SECTION 6" PERFORATED PIPE	510-3201
6" ADJUSTABLE ELBOW	510-3557
6" PIPE BANDS	510-3379
100' ROLL GEOTEXTILE	550-0119

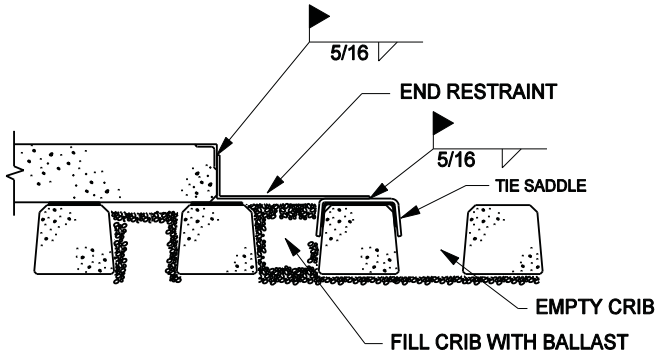

END RESTRAINT DETAIL (FOR CONCRETE TIES ONLY)

UNION PACIFIC RAILROAD ENGINEERING STANDARDS

INSTALLATION OF ROAD CROSSINGS W/ PRECAST CONCRETE PANELS

APPROVED: VP ENGINEERING
ADOPTED: DEC. 19, 1987
REVISED: JAN. 17, 2011
FILE NO.: 0304H

STD DWG 0304H PAGE 2 OF 2

STD DWG 0304H PAGE 2 OF 2

Copyright © 2011 by Union Pacific Railroad

CONFORMED

MATERIAL SPECIFICATIONS:

1) STRUCTURAL STEEL SHALL CONFORM TO ASTM A-36 SPECIFICATIONS. WELDING TO BE PER AWS CODE.

2) ALL EXPOSED STEEL TO RECEIVE ONE COAT PRIMER.

3) END ANGLES FOR GAGE PANEL SHOULD HAVE 3" GAP MINIMUM TO IMPROVE SHUNT RESISTANCE. REINFORCING MATERIAL AND CLADDING TO BE CONSTRUCTED TO MEET SHUNTING REQUIREMENT. A NON-CONDUCTIVE SPACER TO BE ATTACHED TO GAGE FRAME.

4) CLADDING ON ENDS OF PANELS SHOULD EXTEND BEYOND CONCRETE 1/8" (+1/8", -0") TO IMPROVE MATCH WITH ADJACENT PANELS.

5) REINFORCING STEEL SHALL CONFORM TO CURRENT ASTM A615 SPECIFICATION, GRADE 60. IF ANY WELDING OF REINFORCEMENT STEEL IS REQUIRED, MATERIAL SHALL CONFORM TO ASTM A706 SPECIFICATION, GRADE 60.

6) CONCRETE MATERIAL MIXING, PLACING AND CURING TO BE IN ACCORDANCE WITH PCI "MANUAL FOR QUALITY CONTROL: PRECAST AND PRESTRESSED CONCRETE." MANUAL 115, EDITION 4. CEMENT SHALL HAVE NO MORE THAN 0.6% TOTAL ALKALI CONTENT. MAXIMUM WATER/CEMENT RATIO=0.44
(BY WEIGHT). AIR ENTRAINMENT=6%+/- 1% IN PLASTIC CONCRETE. SLUMP 3" MAXIMUM.

7) COPIES OF THE CONCRETE DESIGN MIX TO BE SUBMITTED TO RAILROADS FOR APPROVAL PRIOR TO THE START OF THE CASTING OPERATION.

8) TOP SURFACE SHALL BE NON-CRACK DESIGN AND IS TO BE SEALED TO PREVENT ION MIGRATION DUE TO SALTING.

9) CURING SHALL FOLLOW THE RECOMMENDATIONS AND PROCEDURES OF PCI IN 4TH EDITION DIVISION 4.

10) 3/16" WEEP/INSPECTION HOLES SHALL BE PLACED EVERY 2-FT. MIN. ALONG THE TOP OF THE STEEL FRAME ALONG A LINE 3/4" FROM OUTSIDE EDGE.

11) FLANGEWAY FILLER TO BE PERMANENTLY PREATTACHED AND HAVE THE FOLLOWING PROPERTIES:

* A SAMPLE SECTION OF THE FLANGEWAY MATERIAL SHALL BE PHYSICALLY TESTED BY APPLYING A LATERAL FORCE OF 10 LB/IN AT 50 DEGREES CELSIUS. THE MAXIMUM LATERAL DISPLACEMENT OF THE TEST IS NOT TO EXCEED 1/4" (CROSSING TYPE 10C ONLY). TEST RESULTS MUST BE SUBMITTED FOR RAILROAD APPROVAL.

* MANUFACTURER TO DESIGN THE PREATTACHED FLANGEWAY FILLER TO ALLOW FOR REMOVAL OF PANELS FOR MAINTENANCE WITHOUT DAMAGING THE FLANGEWAY FILLER OR ANY OTHER COMPONENTS DESIGNED TO HOLD IT TOGETHER.

* SEE PAGE 2 FOR MATERIAL SPECIFICATIONS.

TOLERANCES:

1) OUT OF SQUARE 3/16" (MEASURED ALONG THE DIAGONAL)

2) LENGTH, WIDTH, AND THICKNESS: +/-1/8"

3) THE BOTTOM SURFACE, WHICH WILL BE IN CONTACT WITH THE TIES, SHALL NOT UNDULATE IN ANY DIRECTION MORE THAN 3/32". SEE SPECIAL TESTING NOTE 3 BELOW.

4) REINFORCEMENT PLACEMENT SHALL BE +/-3/4" HORIZONTAL, +/-1/8" VERTICAL.

FINISH:

1) ALL RECESSES AND MINOR CONCRETE SPALLS ARE TO BE FILLED AND FINISHED TO THE PANEL DIMENTIONS USING THE PROPER BONDING AGENT AND REPAIR MATERIAL SURFACE OF THE REPAIRED AREA IS TO MATCH THE COLOR AND TEXTURE OF THE SURROUNDING AREAS.

2) THE DRIVING SURFACE IS TO HAVE A LIGHT BROOM FINISH OR AS APPROVED BY RAILROADS. THE ADDITION OF WATER TO THE CONCRETE SURFACE FINISH DURING CASTING IS NOT PERMITTED.

SPECIAL TESTING:

1) TWICE ANNUALY, VENDORS SHALL SUBMIT (VIA AN INDEPENDENT TESTING LABORATORY TO THE RAILROADS) THE FOLLOWING TEST ON THE APPROVED MIXED DESIGN
* ASTM C666 FREEZE/THAW
* ASTM C227 MORTAR BAR METHOD
* ASTM C1260 AT TOTAL ALKALI BURDEN = 0.06%

2) GAGE PANELS SHALL BE DESIGNED WITH SHUNT RESISTANT FEATURES IN ORDER TO PROVIDE A MINIMUM ELECTRICAL RESISTANCE IN ACCORDANCE WITH THE STANDARD ELECTRICAL TEST (DWG 500930).

3) A REPRESENTATIVE SAMPLE OF PANELS SHALL BE CHECKED PERIODICALLY FOR BOTTOM FLATNESS BY USING A STRAIGHT EDGE CALIBRATED TO WITHIN +/-1/32" AND A TAPER GAGE AS FOLLOWS:
8 POSITIONS OF FLATBAR (—) CHECK FLATNESS AT EACH POSITION USING TAPER GAGE.

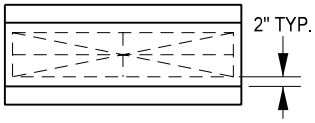

GENERAL:

1) THE MANUFACTURER SHALL BE ISO 9000 OR AAR M-1003 CERTIFIED. ALL TESTING PERSONNEL SHALL BE A MINIMUM OF ACI LEVEL I CERTIFIED.

2) THE FABRICATOR SHALL BE RESPONSIBLE FOR LOADING AND PROPERLY SECURING ALL PRECASTCONCRETE MEMBERS FOR SHIPMENT.

3) THE MANUFACTURER SHALL WARRANTY PRODUCT FOR A MINIMUM OF TEN YEARS AGAINST DEFECTS IN MATERIALS AND WORKMANSHIP.

4) MAUNFACTURER TO PERMANENTLY MARK EACH PANEL WITH A CONCRETE IMPRINT FOR SIZE OF RAIL, WEIGHT OF PANEL, MANUFACTURER'S I.D., MONTH/DAY/YEAR OF MANUFACTURE, AND CROSSING TYPE. END OF EACH PANEL TO BE STENCILED PAINTED WITH SIZE OF RAIL, WEIGHT OF PANEL AND CROSSING TYPE.

UNION PACIFIC RAILROAD ENGINEERING STANDARDS

GENERAL SPECIFICATIONS FOR ROAD CROSSINGS WITH CONCRETE PANELS

UNION PACIFIC

ADOPTED: OCT. 24, 2013
REVISED:
FILE NO.: 0308

STD DWG
0308
PAGE 1 OF 2

STD DWG
0308
PAGE 1 OF 2

CONFORMED

Copyright © 2013 by Union Pacific Railroad

NON-CONDUCTIVE FILLER COMPOUND MATERIAL SPECIFICATIONS

AN ALL EPDM BASED COMPOUND IS TO BE USED IN THE UPRR ATTACHED CONCRETE PANEL FILLERS. IT IS TO HAVE SUPERIOR WEATHERING, AGING AND HEAT RESISTANCE CHARACTERISTICS AND IS TO BE MADE USING ONLY NON-CONDUCTIVE INGREDIENTS AND PIGMENTED SO IT IS A LIGHT NON-MARKING GRAY COLOR.

THE COMPOUND MEETS LINE CALLOUT ASTM D2000 3BA714, A14, B13, C12, F17, Z1, Z2, Z3, Z4, Z5, Z6, Z7
Z1 = ULTIMATE ELONGATION INCREASE TO 400%
Z2 = HARDNESS INCREASE TO 75 +/- 5 SHORE A
Z3 = ADD COMPRESSION SET AT 257°F
Z4 = ADD FLUID RESISTANCE TEST
Z5 = ADD VOLUME RESISTIVITY TEST
Z6 = ADD MEGGAR TEST
Z7 = ADD TEAR STRENGTH

PHYSICAL PROPERTIES	UNIT	REQUIRED	LIMIT	TEST METHOD	TESTING FREQUENCY		
					BATCH	5TH BATCH	ANNUALLY
TENSILE STRENGTH	PSI	1400	MIN	ASTM D412		X	
ELONGATION	% (Z1)	400	MIN	ASTM D412		X	
HARDNESS	SHORE "A" (Z2) DURO POINTS	75	+/- 5	ASTM D2240	X		
HEAT RESISTANCE:				ASTM D573 70 HRS @ 212°F			X
TENSILE STRENGTH	% CHANGE	-25	MAX				
ELONGATION	% CHANGE	-25	MAX				
HARDNESS	POINTS CHANGE	+10	MAX				
COMPRESSION SET	% (Z3)			ASTM D395 B			X
		25	MAX	22 HRS @ 158°F			
		75	MAX	22 HRS @ 257°F			
OZONE RESISTANCE	N/A	PASS	NO CRACKS	ASTM D1171 METHOD B 70 HRS @ 50 pphm @ 104°F			X
FLUID RESISTANCE	% CHANGE (Z4)	+/- 5	MAX	ASTM D471 (WATER) 70 HRS @ 212°F			X
LOW TEMPERATURE BRITTLENESS	N/A	PASS	NO CRACKS	ASTM D2137 CONDITIONED 3 MIN @ -40°F IN METHANOL			X
VOLUME RESISTIVITY	OHM-CM (Z5)	1.0×10^{12}	MIN	ASTM D257 (DRY)			X
VOLUME RESISTIVITY	OHM-CM (Z5)	1.0×10^{11}	MIN	ASTM D257 (CONDITIONED IN AN 18% NaCl SOLUTION FOR 168 HRS @ 25°C)			X
VOLUME RESISTIVITY - COMPRESSION	OHM-CM (Z5)	1.0×10^{12}	SEE NOTE 1	VOL RESISTIVITY ASTM D257 WHILE UNDER COMPRESSION PER ASTM D575 A (SEE NOTE 10)			X
MEGGAR TEST	OHM (Z6)	2G OHM	SEE NOTE 1	UPRR TEST (SEE NOTE 11)		X	
TEAR STRENGTH	lb/in (Z7)	150	MIN	ASTM D624 DIE "C"			X
RHEOMETER	N/A	NONE	SEE NOTE 1	ASTM D2084	X		
SPECIFIC GRAVITY	SG	NONE	SEE NOTE 1	ASTM D297	X		

NOTES:
1. TEST RESULTS FROM A REPRESENTATIVE SAMPLE ALONG WITH RECOMMENDED TOLERANCES ARE TO BE SUBMITTED TO UPRR FOR REVIEW AND APPROVAL.
2. A SAMPLE OF THE PROPOSED MATERIAL IS TO BE SUBMITTED TO UPRR FOR REVIEW AND APPROVAL.
3. MATERIAL SPECIFICATIONS APPLY TO BOTH GAGE SIDE AND FIELD SIDE FLANGEWAY MATERIAL.
4. ANY CHANGES IN MATERIAL COMPOSITION OF THE APPROVED SAMPLE WILL REQUIRE PRIOR APPROVAL FROM UPRR.
5. MANUFACTURER SHALL BE ISO 9001-2000 OR AAR M-1003 CERTIFIED.
6. ALL PERSONELL CONDUCTING MATERIAL TESTING SHALL BE AALA CERTIFIED FOR CONDUCTING MECHANICAL TESTING. ANY ALTERNATIVE LAB ACCREDITION WILL REQUIRE PRIOR APPROVAL.
7. MANUFACTURER SHALL MAINTAIN RECORDS FOR 10 YEARS AND RECORDS ARE TO BE OPEN TO REVIEW BY AUTHORIZED UPRR REPRESENTATIVES.
8. MANUFACTURER TO WARRANTY MATERIALS FOR 10 YRS.
9. EACH BATCH SHALL BE MARKED WITH A UNIQUE IDENTIFIER THAT WILL PERMIT TRACKING OF THE MATERIAL. EACH SAMPLE SHALL BE MARKED INDICATING IT IS "UPRR APPROVED".
10. REFER TO: VOLUME RESISTIVITY - COMPRESSION TESTS FOR ANNUAL MATERIAL CERTIFICATION 12-20-05
11. REFER TO: INSULATION RESISTANCE TESTING OF CONCRETE CROSSING PANEL FLANGEWAY FILLER - BOTH CENTER AND FIELD PANELS 12-19-05

UNION PACIFIC RAILROAD ENGINEERING STANDARDS

GENERAL SPECIFICATIONS FOR ROAD CROSSINGS WITH CONCRETE PANELS

UNION PACIFIC

ADOPTED: OCT. 24, 2013
REVISED:
FILE NO.: 0308

STD DWG
0308
PAGE 2 OF 2

STD DWG
0308
PAGE 2 OF 2

CONFORMED

Copyright © 2013 by Union Pacific Railroad

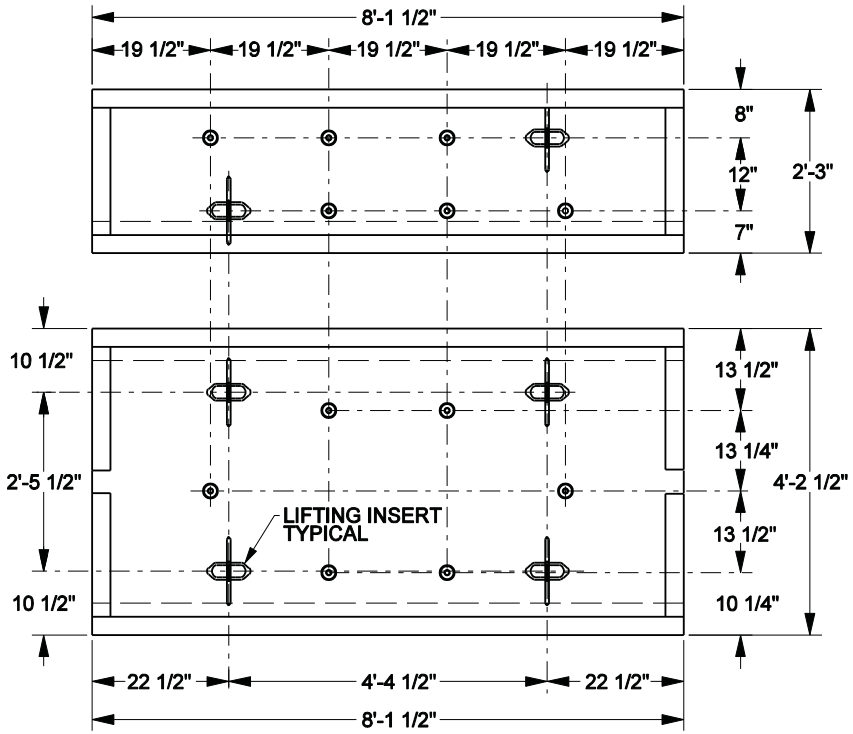

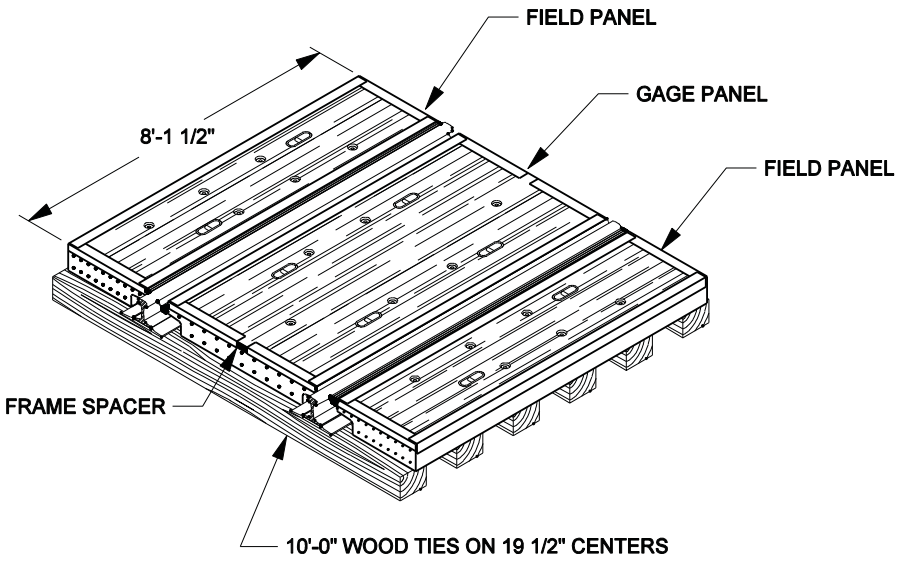

NOTES:
1/4" RUBBER INTERFACE PAD TO BE PLACED BETWEEN PANEL AND TIES FOR 141 LB. RAIL SECTION. PAD TO BE NAILED TO TIES,

CROSSING TYPE - 10W

RAIL SIZE	PANEL HEIGHT	GAGE PANEL WEIGHT	FIELD PANEL WEIGHT
115	7 1/8"	2850 LBS.	1550 LBS.
132-141	7 7/8"	3125 LBS.	1675 LBS.

BNSF RAILWAY

COMMON STANDARDS

LAYOUT FOR CONCRETE PANELS ON 10'-0" LONG WOOD TIES (10W)

ITEM NUMBERS				
141 LB. BNSF	133-141 LB. UPRR	132-136 LB. BNSF	115 LB. UPRR	115 LB. BNSF
054374616	540-1301	004935722	540-0202	004935706

FILE OWNER: UPRR | DATE: DEC. 6, 2010

REV. NO.: 2 | DWG NO: 200100

200100

CONFORMED

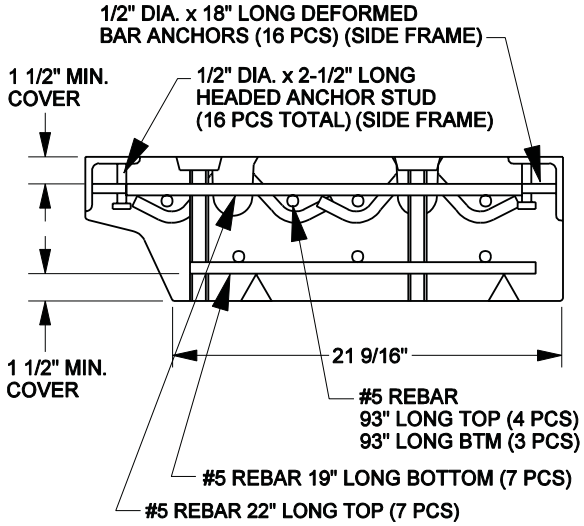

CROSS SECTION - FIELD PANEL

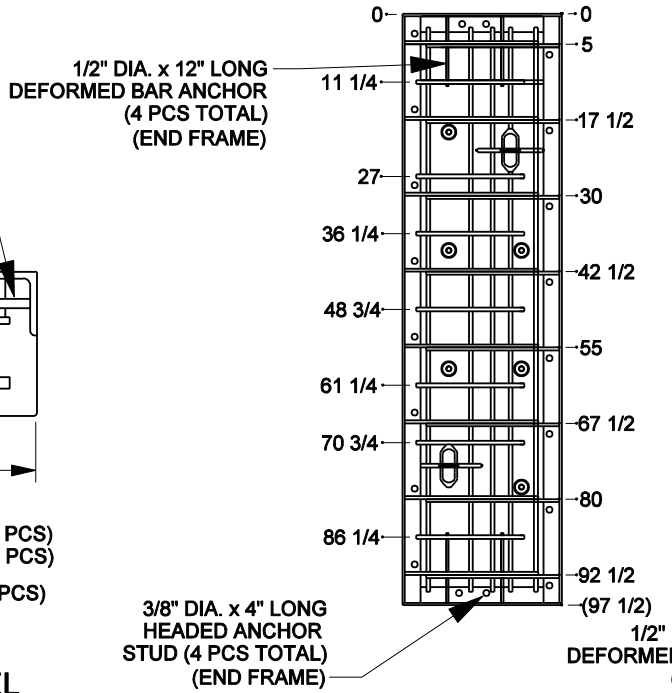

FIELD PANEL

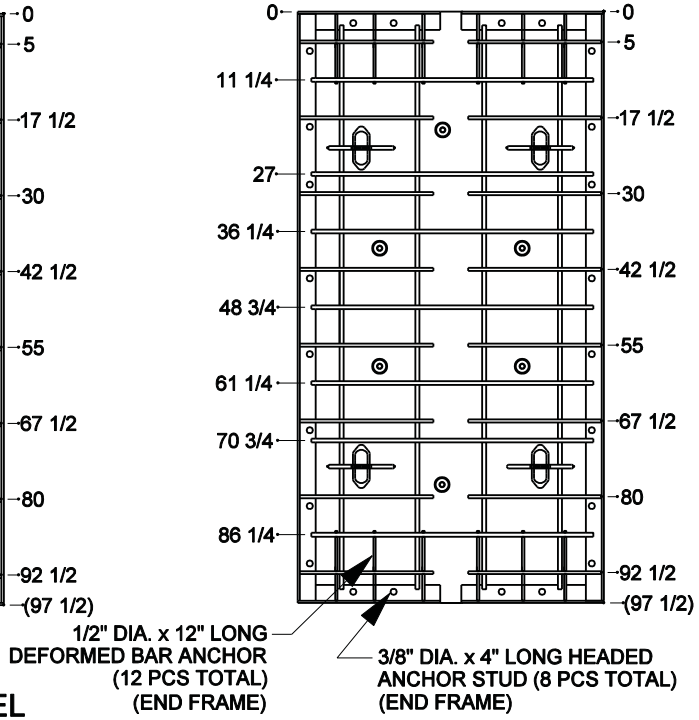

GAGE PANEL

NOTES:
CONCRETE COMPRESSIVE STRENGTH SHALL BE AS FOLLOWS:
@ 28DAYS = 6000 psi MINIMUM
@ SHIPMENT = 4000 psi MINIMUM
@ REMOVAL FROM FORMS = 2500 psi MINIMUM.

CROSSING TYPE - 10W

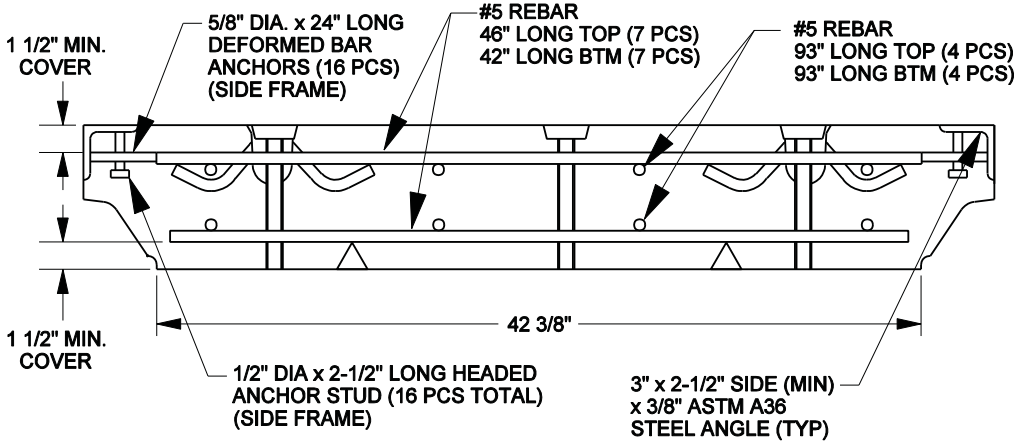

CROSS SECTION - GAGE PANEL

BNSF RAILWAY

UNION PACIFIC

COMMON STANDARDS

PRECAST CONCRETE PANELS FOR 10'-0" LONG WOOD TIES (10W)

UPRR VP ENGINEERING

BNSF VP ENGINEERING

FILE OWNER: UPRR	DATE: NOV. 6, 2009
REV. NO.: 2	DWG NO: 200102

200102

CONFORMED

200902

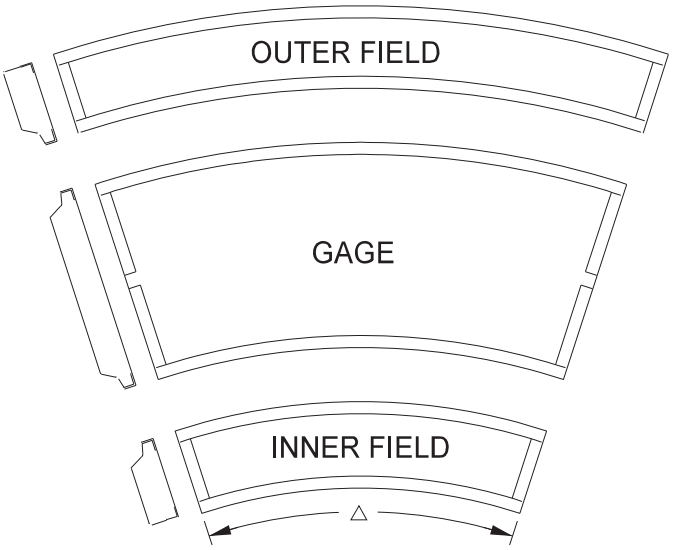

(SEE PANEL CURVATURE TABLES)

CURVATURE TABLE
(ON CONCRETE TIES)

DEGREE OF CURVE	RADIUS IN FEET	△	CURVE PANEL?
2° OR LESS	2865'	0.20°	NO
3°	1910'	0.30°	YES
4°	1433'	0.40°	YES
5°	1146'	0.50°	YES
6°	955'	0.60°	YES
7°	819'	0.70°	YES
8°	717'	0.80°	YES
9°	637'	0.90°	YES
10°	574'	1.00°	YES
11°	522'	1.10°	YES
12°	478'	1.20°	YES
13°	442'	1.30°	YES
14°	410'	1.40°	YES

CURVATURE TABLE
(ON WOOD TIES)

DEGREE OF CURVE	RADIUS IN FEET	△	CURVE PANEL?
3° OR LESS	1910'	0.24°	NO
4°	1433'	0.32°	YES
5°	1146'	0.40°	YES
6°	955'	0.48°	YES
7°	819'	0.56°	YES
8°	717'	0.66°	YES
9°	637'	0.74°	YES
10°	574'	0.82°	YES
11°	522'	0.90°	YES
12°	478'	0.98°	YES
13°	442'	1.06°	YES
14°	410'	1.14°	YES

NOTES:
A CURVED PANEL IS A PANEL THAT IS PIE SHAPED WITH A LONGER OUTER LENGTH THAN THE INNER LENGTH WITH TRUE RADIUSED OUTER AND INNER STEEL.

CURVED PANELS USE STANDARD REINFORCEMENT SIMILAR TO TANGENT PANEL STANDARD REINFORCEMENT.

LAG HOLES ON 10W AND 9W CROSSINGS MUST LINE UP WITH THE CENTERLINE OF TIES.

XING TYPE (RAIL WT.)	BNSF ITEM NO.	UPRR ITEM NO.
10W (115)	055590002	NON-STOCK
10W (133-141)	055590001	NON-STOCK
9W	NON-STOCK	NON-STOCK
10C	NON-STOCK	NON-STOCK
85C	NON-STOCK	NON-STOCK

COMMON STANDARDS

CURVED CONCRETE PANELS

FILE OWNER: UPRR	DATE: APRIL 24, 2001
REV. NO.: 0	DWG NO:200902

CONFORMED

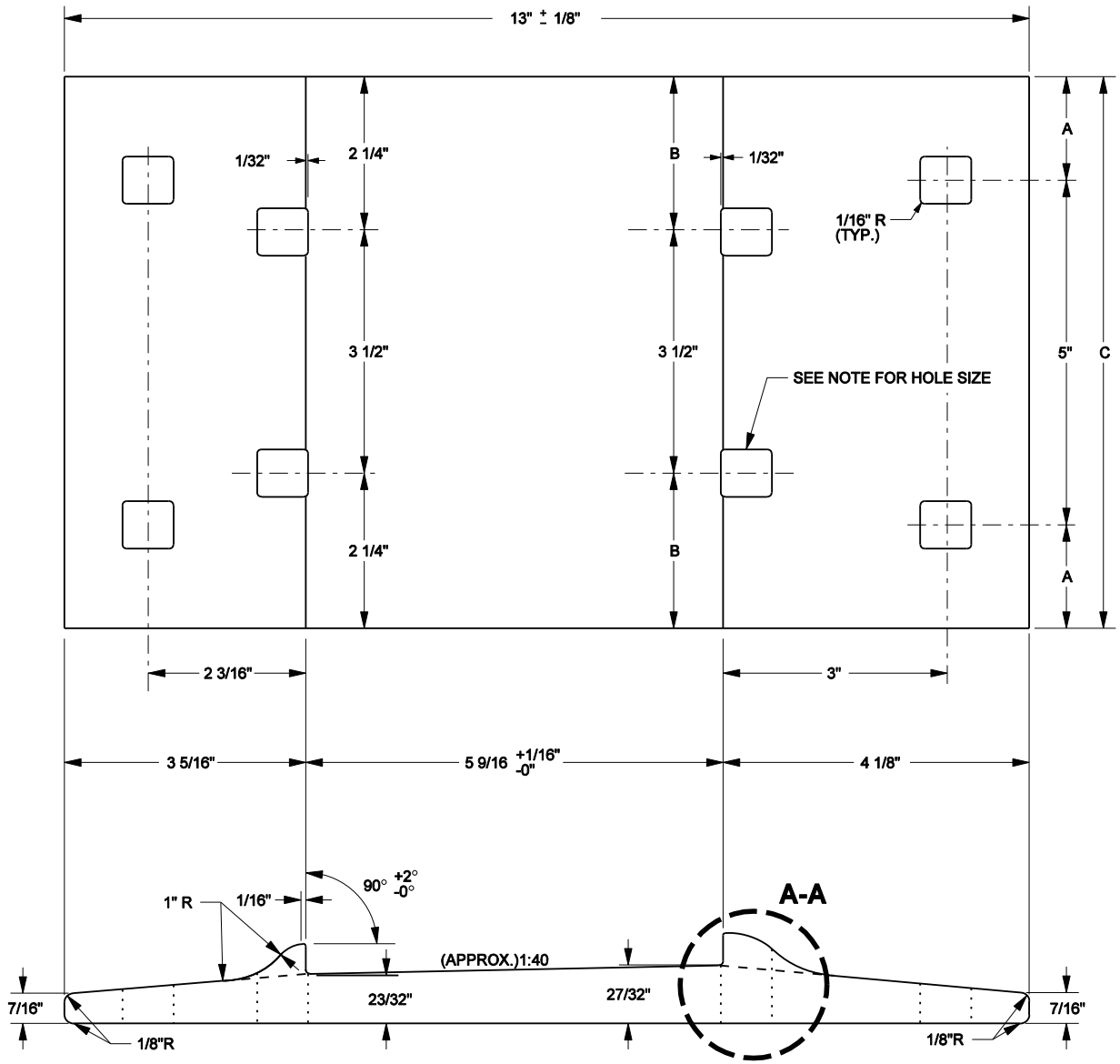

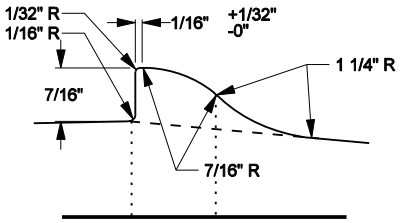

DETAIL A-A

NOTES:
1. ALL SPIKE HOLES: U.P. TO BE 11/16" SQUARE AND CNW TO BE BE 3/4" SQUARE.
2. SPECIFICATIONS AND WORKMANSHIP TO BE IN ACCORDANCE WITH CURRENT A.R.E.A. MANUAL REQUIREMENTS FOR HOT-WORKED, HIGH CARBON STEEL TIE PLATES.
3. ROLL MANUFACTURER'S IDENTITY, U.P. RAIL SECTION AND YEAR ROLLED ON TOP OF FIELD SIDE OF TIE PLATE.
4. REF PREVIOUS U.P. STD DWG PAGE 2007 AND PREVIOUS M.P. STD DWG NO.412.2A

	A	B	C	ITEM NO.
M.P.	1 1/2"	2 1/4"	8"	554-3779
CNW	1 3/8"	2 1/8"	7 3/4"	554-2015

UNION PACIFIC RAILROAD ENGINEERING STANDARDS

DOUBLE SHOULDER TIE PLATE FOR 5 1/2" BASE RAIL

APPROVED: VP ENGINEERING
ADOPTED: SEP. 23, 1949
REVISED: JAN. 8, 2010
FILE NO.: 0440B

STD DWG 0440B

STD DWG 0440B

Copyright © 2010 by Union Pacific Railroad

CONFORMED

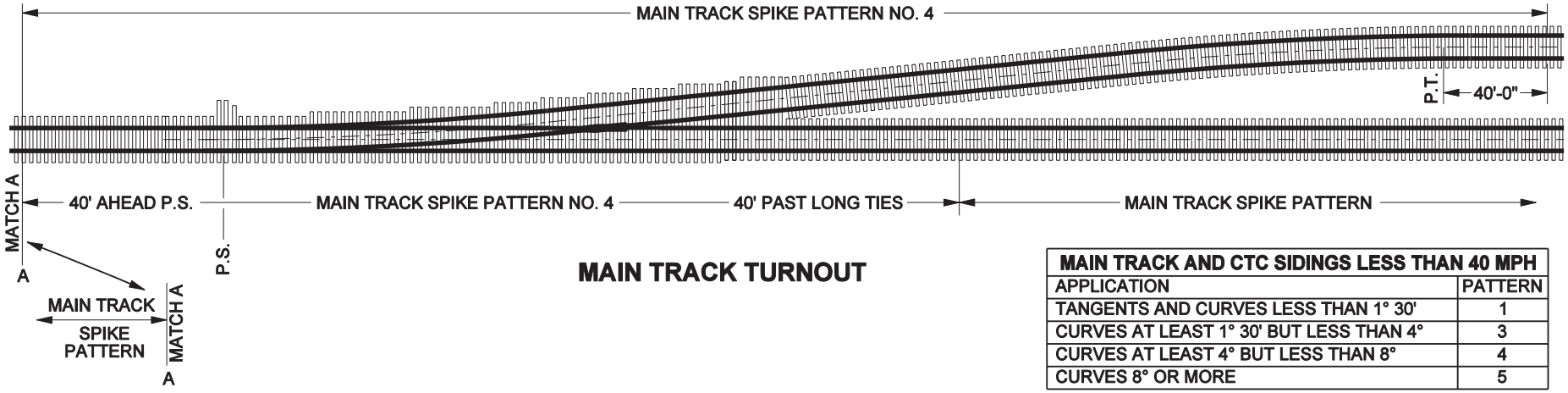

MAIN TRACK TURNOUT

MAIN TRACK AND CTC SIDINGS LESS THAN 40 MPH	
APPLICATION	PATTERN
TANGENTS AND CURVES LESS THAN 1° 30'	1
CURVES AT LEAST 1° 30' BUT LESS THAN 4°	3
CURVES AT LEAST 4° BUT LESS THAN 8°	4
CURVES 8° OR MORE	5

MAIN TRACK AND CTC SIDINGS 40 MPH OR MORE	
APPLICATION	PATTERN
TANGENTS AND CURVES LESS THAN 30'	2
CURVES AT LEAST 30' BUT LESS THAN 1° 30'	3
CURVES AT LEAST 1° 30' BUT LESS THAN 4°	4
CURVES 4° OR MORE	5

YARD AND INDUSTRY TRACKS	
APPLICATION	PATTERN
TANGENTS AND CURVES LESS THAN 4°	1
CURVES AT LEAST 4° BUT LESS THAN 8°	3
CURVES 8° OR MORE	4

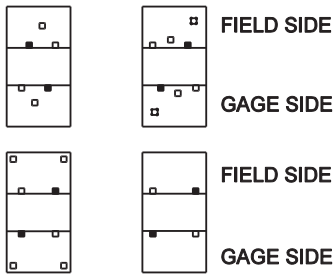

SPIKING PATTERN NO. 1

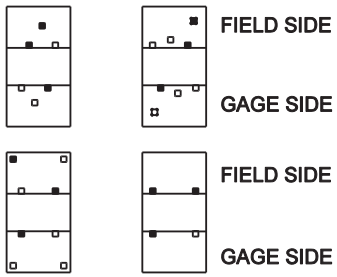

SPIKING PATTERN NO. 2

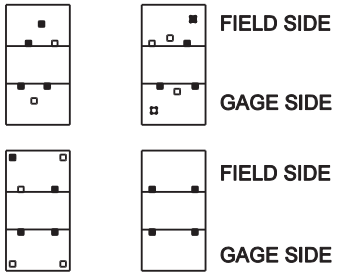

SPIKING PATTERN NO. 3

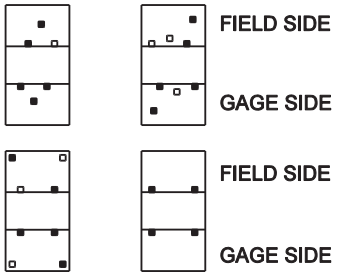

SPIKING PATTERN NO. 4

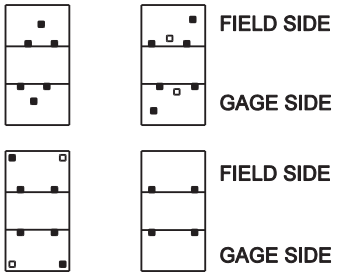

SPIKING PATTERN NO. 5

■ - DENOTES SPIKE FILLED HOLE

NOTES:
1. THE SPIKE PATTERNS SHOWN ARE FOR MAIN TRACKS, BRANCH LINE TRACKS, HEAVY TONNAGE SPURS, AND C.T.C. SIDINGS WITH 13" AND LONGER PLATES.
2. ANY SPIKING PATTERN OTHER THAN WHAT IS SHOWN ON THIS DRAWING ARE TO BE APPROVED BY THE CHIEF ENGINEER.

UNION PACIFIC RAILROAD ENGINEERING STANDARDS

SPIKING PATTERN

UNION PACIFIC

ADOPTED: DEC. 31, 1996
REVISED: JUL. 17, 2007
FILE NO.: 0453D

STD DWG
0453D

STD DWG
0453D

Copyright © 2005 by Union Pacific Railroad

CONFORMED

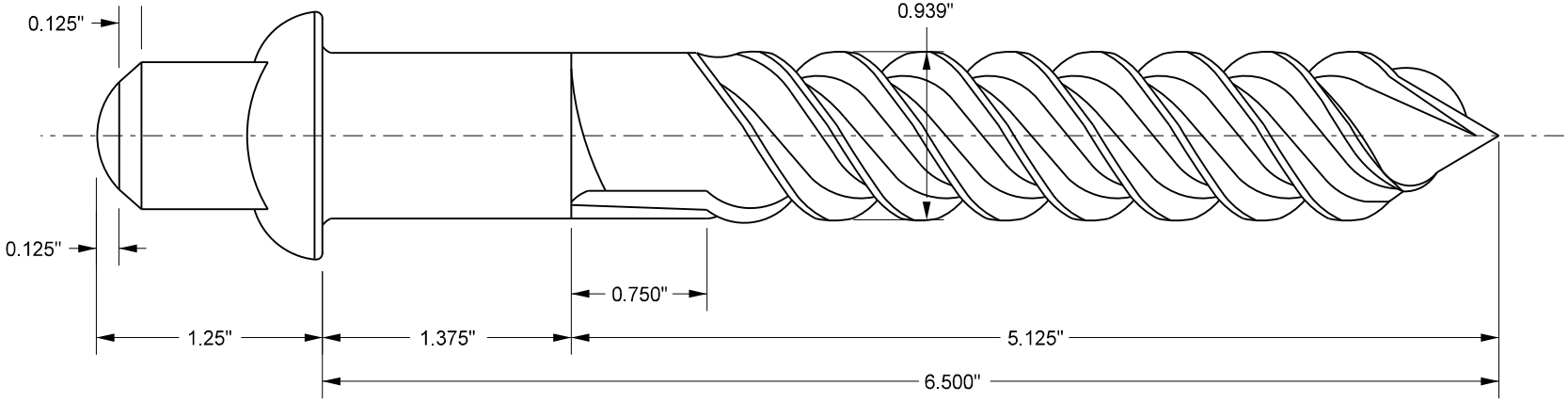

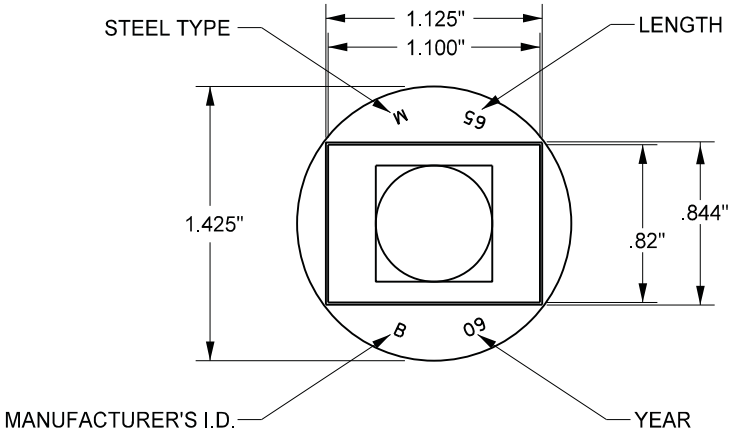

TOP VIEW OF HEAD

NOTES:
1. EVERGRIP LAG SCREW REQUIRES A 3/4" PRE-DRILL.
2. LAGS MAY SHALL BE SCREWED IN USING A HYDRAULIC IMPACT OR PRODUCTION LAGGER.
3. EVERGRIPS WILL NOT BE REMOVED USING A SPIKE PULLER. LAGS MUST BE REMOVED USING A IMPACT OR DE-LAGGER.

UNION PACIFIC RAILROAD ENGINEERING STANDARDS

EVERGRIP LAG SCREW

DESCRIPTION	ITEM NO.
EVERGRIP TIMBER LAG SCREW	503-8623
DRILL BIT 3/4"	414-0500
SOCKET FOR 1" DRIVE IMPACT WRENCH	570-3747
SOCKET FOR 3/4" DRIVE GE SMART	570-3745

CONFORMED

UNION PACIFIC

ADOPTED: APR. 13, 2011
REVISED: JAN. 18, 2013
FILE NO.: 0454A

STD DWG
0454A

STD DWG
0454A

Copyright © 2013 by Union Pacific Railroad

CONTINUOUS WELDED RAIL (NEW INSTALLATION):

1) BOX ANCHOR EVERY OTHER TIE (USE PATTERN #1). ANCHORING NOT REQUIRED ON TIES WITH ELASTIC FASTENERS.

2) CHIEF ENGINEER MAY AUTHORIZE ADDITIONAL ANCHORS TO BE INSTALLED ON CONCRETE OR WOOD TIES WHERE INCREASED RAIL RESTRAINT IS DESIRED. SUCH LOCATIONS MAY BE: SUBDIVISIONS EXPECTED TO HANDLE 95MGT OR MORE ANNUALLY, OPEN JOINTS IN CWR TERRITORY, HEAVY TRAIN BRAKING GRADES, ETC.

JOINTED RAIL (NEW INSTALLATION):

BOX ANCHOR EVERY OTHER TIE (USE PATTERN #1)

JOINTED RAIL TURNOUTS (NEW INSTALLATION):

1) BOX ANCHOR EVERY TIE (USE PATTERN #2).

2) BOX ANCHOR 48 TIES AHEAD OF POINT OF SWITCH AND BEHIND LAST TURNOUT TIE (USE PATTERN #2).

TURNOUTS (NEW INSTALLATION):

1) BOX ANCHOR EVERY TIE (USE PATTERN #2).

2) BOX ANCHOR EVERY TIE 120 TIES AHEAD OF POINT OF SWITCH AND BEHIND LAST TURNOUT TIE (USE PATTERN #2).

OPEN DECK BRIDGES:

BOX ANCHOR EVERY TIE120 TIES AWAY IN BOTH DIRECTIONS ON CONCRETE AND WOOD TIES (USE PATTERN #2).

HOT BOX / DRAGGING EQUIPMENT DETECTORS:

BOX ANCHOR 120 TIES AWAY IN BOTH DIRECTIONS ON WOOD TIES ONLY (USE PATTERN #2). ANCHORING NOT REQUIRED ON TIES WITH ELASTIC FASTENERS.

INSULATED JOINTS

BOX ANCHOR EVERY TIE 120 TIES AWAY FROM THE INSULATED JOINT IN BOTH DIRECTIONS ON WOOD TIES ONLY (USE PATTERN #2). ANCHORING NOT REQUIRED ON TIES WITH ELASTIC FASTENERS.

CROSSING FROGS

BOX ANCHOR EVERY TIE 120 TIES AWAY FROM THE CROSSING FROG IN ALL DIRECTIONS ON CONCRETE AND WOOD TIES (USE PATTERN #2).

ROAD CROSSINGS

BOX ANCHOR EVERY TIE THROUGH THE CROSSING LIMITS ON WOOD TIES ONLY (USE PATTERN #2). ANCHORING NOT REQUIRED ON TIES WITH ELASTIC FASTENERS.

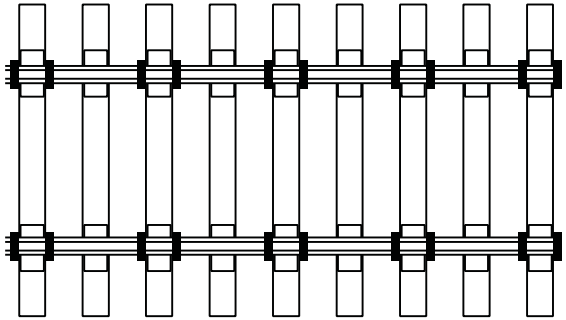

ANCHOR PATTERN #1

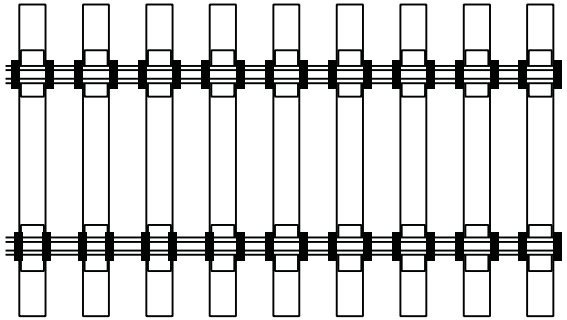

ANCHOR PATTERN #2

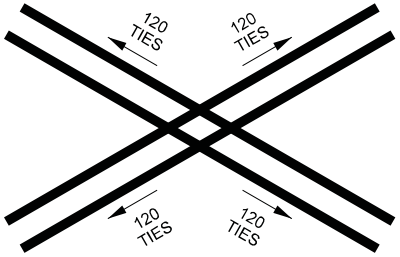

CROSSING FROGS

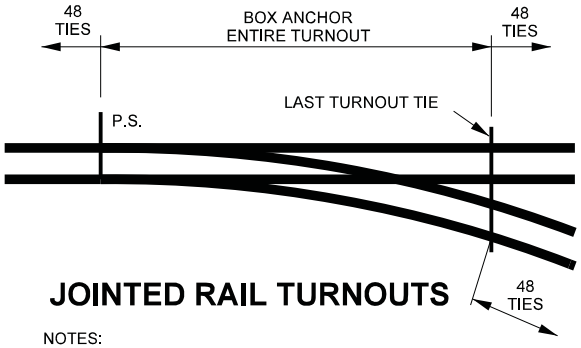

JOINTED RAIL TURNOUTS

NOTES:

1. ANCHOR PATTERN #1 WILL BE USED FOR ALL RAIL RELAYS. EXISTING ANCHOR PATTERNS MAY REMAIN UNTIL A RAIL RELAY IS DONE.
2. WHERE ELASTIC FASTENERS FAIL TO PROPERLY RESTRAIN THE RAIL FROM MOVING LONGITUDINALLY, INSTALL ADDITIONAL ANCHORS AS REQUIRED.
3. WHERE PRACTICAL, ANCHOR TO BE INSTALLED FROM GAGE SIDE OF RAIL.
4. USE AN ANCHOR WITH AN ISOLATOR ON CONCRETE TIE APPLICATIONS (ITEM NO. 550-1652).
5. IN A CURVE, IF THERE ARE ELASTIC FASTENERS ON ONE RAIL, BUT NOT BOTH, USE ANCHOR PATTERN #1 ON THE RAIL WITHOUT ELASTIC FASTENERS.

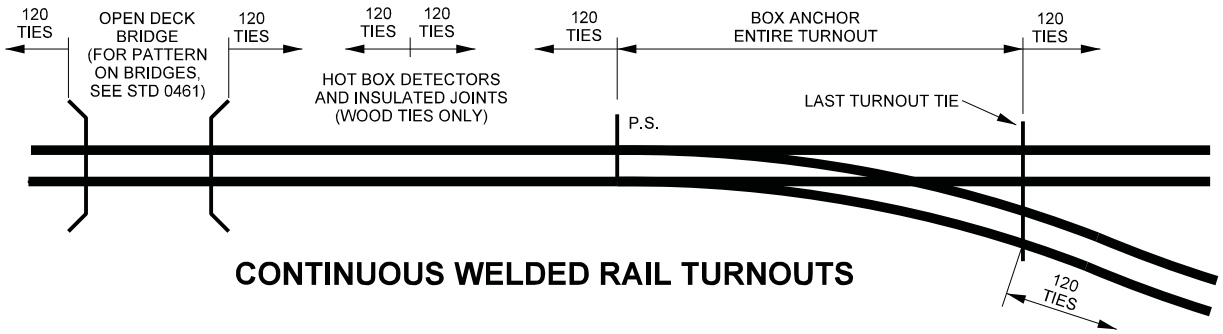

CONTINUOUS WELDED RAIL TURNOUTS

UNION PACIFIC RAILROAD ENGINEERING STANDARDS

RAIL ANCHOR PATTERNS FOR NEW RAIL INSTALLATIONS

ADOPTED: DEC. 31, 1996
REVISED: JAN. 17, 2014
FILE NO.: 0460G

STD DWG
0460G

STD DWG
0460G

CONFORMED

Copyright © 2014 by Union Pacific Railroad

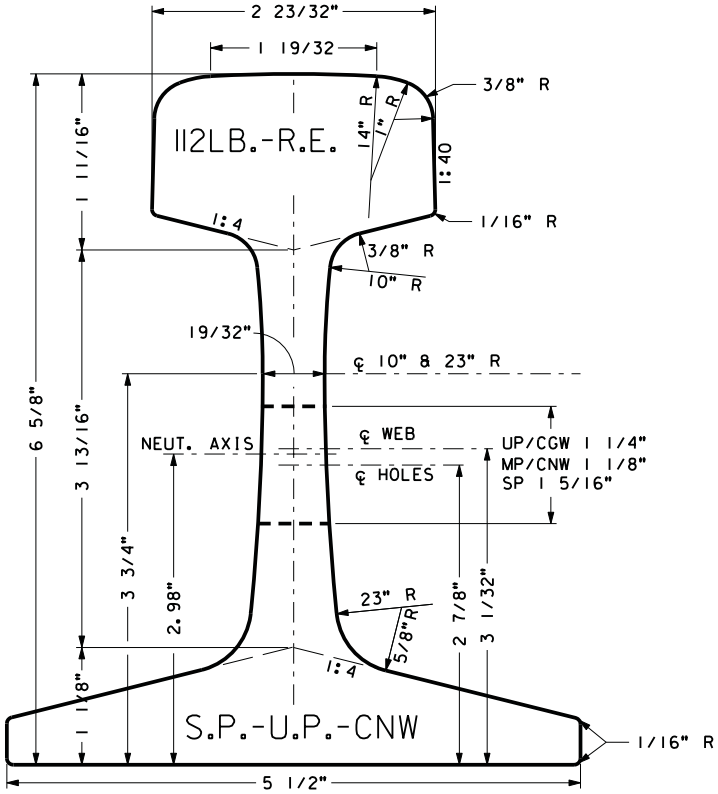

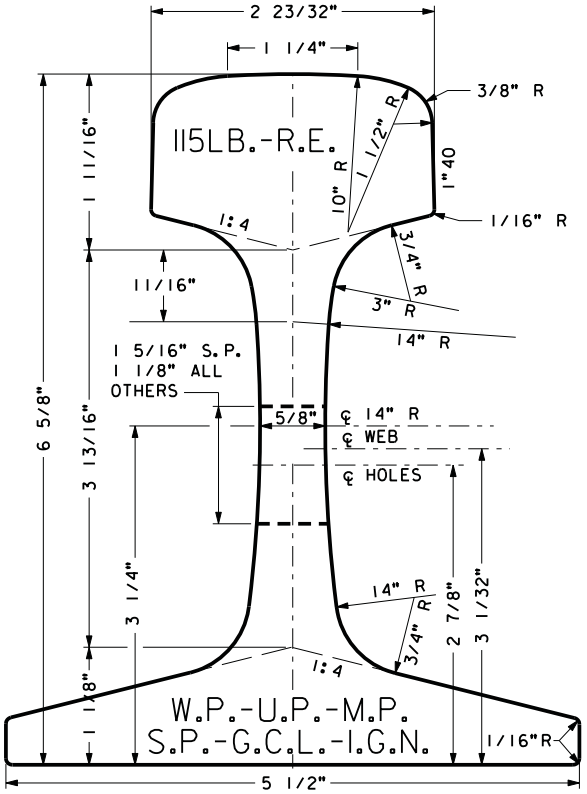

U. P. { *2 15/16 -6 1/2 | *2 15/16 -6 1/2 -6 1/2
**6 1/2 -6-6 1/2 | **6 1/2 -6 1/2 -6-6 1/2 -6 1/2

CNW S. P. { *2 1/2 -6 1/2 -6 1/2

W. P. - S. P. { *2 1/2 -6 1/2 -6 1/2 | *2 1/2 -6 1/2
**6 1/2 -6 1/2 -5 1/8 -6 1/2 -6 1/2, **6 1/2 -5 1/8 -6 1/2

CGW M&ST. L { *3 1/2 -6

CNW ALL OTHERS { *3 1/2 -6-6
**6-6-7 1/8 -6-6

NOTES:
* INDICATES RAIL END DRILLING.

** INDICATES BAR PUNCHING.

REF PREVIOUS U. P. STD DWGS PAGES 1003-1005.

112 LB. IS USED FOR MAINTENANCE ONLY

UNION PACIFIC RAILROAD
ENGINEERING STANDARDS

112 LB. AND 115 LB. RAIL SECTIONS

UNION PACIFIC

ADOPTED: MAY 26, 1988
REVISED: MARCH 1, 1998
FILE NO.: 0720

STD DWG
0720A

Copyright © 1997 by Union Pacific Railroad

STD DWG
0720A

CONFORMED

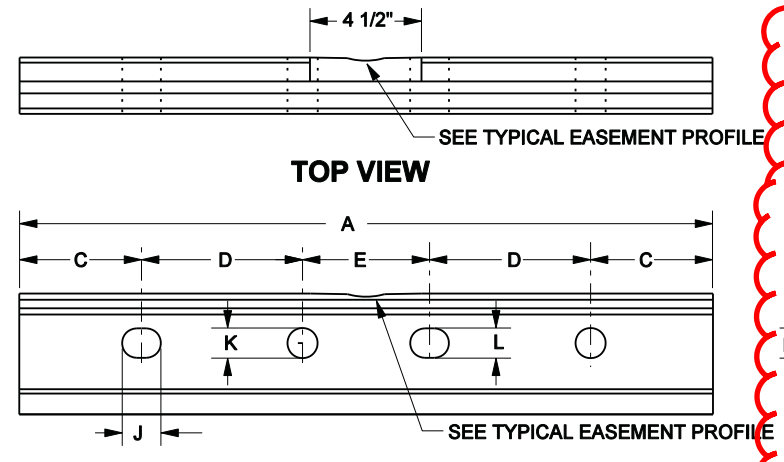

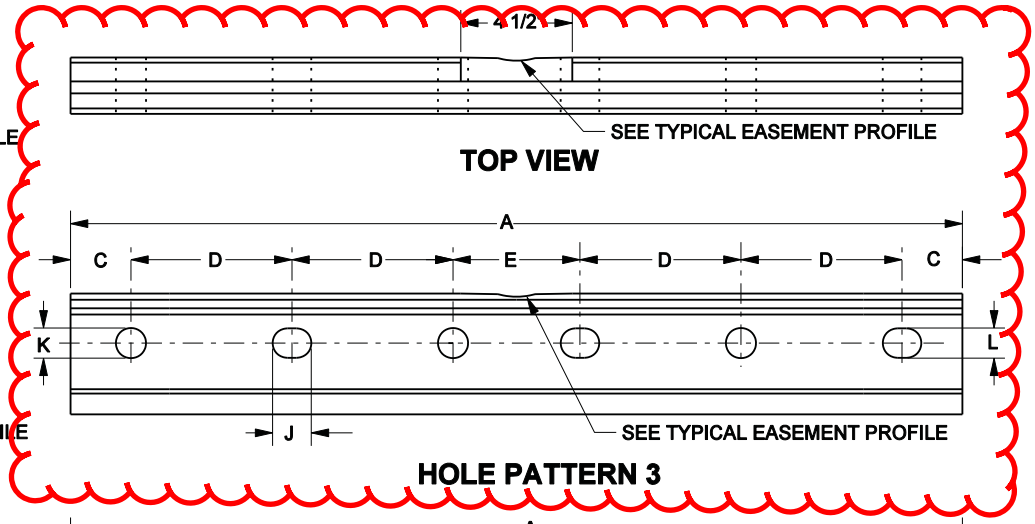

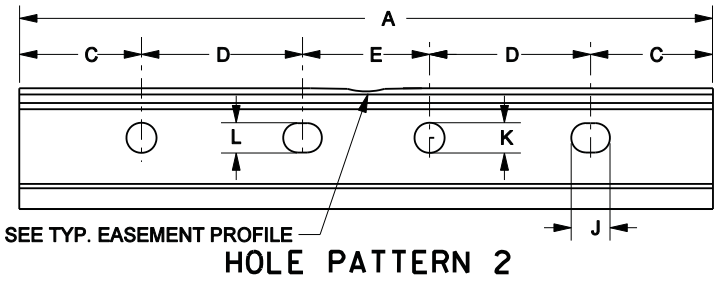

ELEVATION OF 24" AND 28" BAR

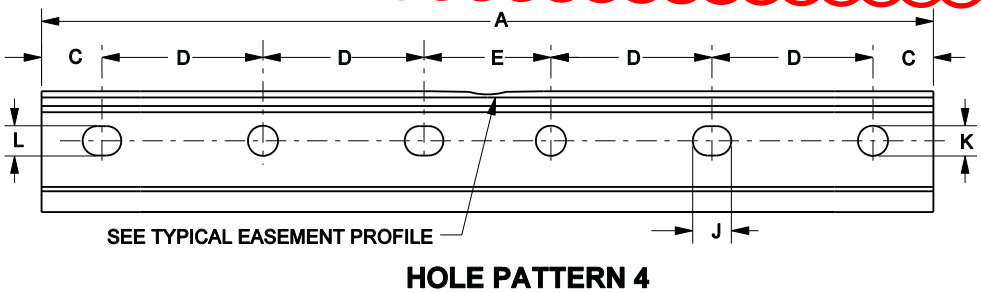

ELEVATION OF 36" BAR

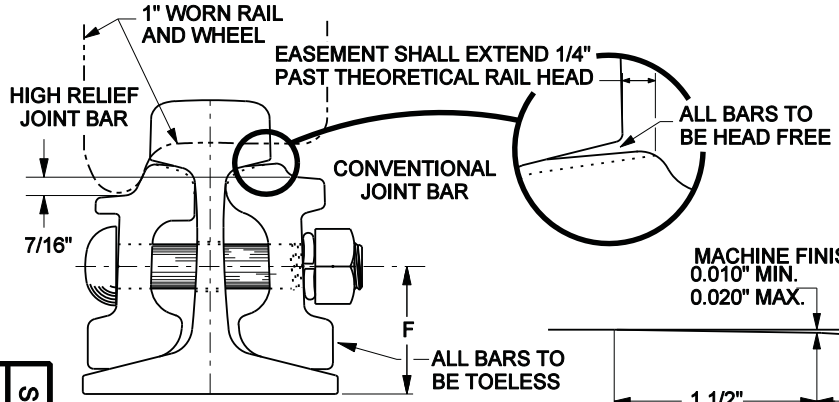

RAIL AND JOINT

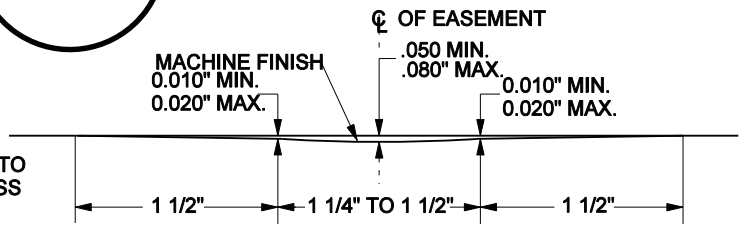

TYPICAL EASEMENT PROFILE

NOTE:
1. SEE PAGE 2 FOR THE REST OF THIS DWG.

UNION PACIFIC RAILROAD ENGINEERING STANDARDS

MISCELLANEOUS JOINT BARS

ADOPTED: MARCH 1, 1998
REVISED: MAY 18, 2005
FILE NO.: 0904F

STD DWG
0904F
PAGE 1 OF 2

STD DWG
0904F
PAGE 1 OF 2

Copyright © 2005 by Union Pacific Railroad

CONFORMED

STANDARD JOINT BAR	ITEM NO.	HOLE PATTERN	A	C	D	E	F	G	H	J	K	L
110 LB. 24" S.P. PUNCH	552-7300	2	24"	3 3/4"	5 1/2"	5 1/2"	2 5/8"	2 11/16"	1 1/4"	1 1/2"	1 5/32"	1 7/16"
112 LB. 24" U.P. PUNCH	552-7354	1	24"	2 15/16"	6 1/2"	5 1/8"	2 7/8"	2 1/2"	1 1/8"	1 9/16"	1 3/16"	1 3/16"
112 LB. 36" U.P. PUNCH	552-7385	4	36"	3"	6 1/2"	6"	2 7/8"	2 15/16"	1 1/8"	1 9/16"	1 1/8"	1 1/8"
113 LB. 28" S.P. PUNCH	552-7400	2	28"	4 15/16"	6 1/2"	5 1/8"	2 7/8"	2 1/2"	1 1/4"	1 9/16"	1 7/32"	1 3/16"
115 LB. 24" DRGW PUNCH	552-7408	1	24"	3"	6"	6"	2 7/8"	2 15/16"	1 1/8"	1 9/16"	1 3/16"	1 3/16"
115 LB. 28" S.P. PUNCH	552-7430	2	28"	4 15/16"	6 1/2"	5 1/8"	2 7/8"	2 1/2"	1 1/4"	1 9/16"	1 7/32"	1 3/16"
115, 119 LB. 36" U.P. PUNCH	552-7447	3	36"	2 7/16"	6"	7 1/8"	2 7/8"	3 1/2"	1 1/8"	1 13/32"	1 1/16"	1 1/16"
119 LB. 28" S.P. PUNCH	552-7500	2	28"	4 15/16"	6 1/2"	5 1/8"	2 7/8"	2 1/2"	1 1/4"	1 1/2"	1 7/32"	1 3/16"
119 LB. 36" DRGW PUNCH	552-7900	3	36"	3"	6"	6"	2 7/8"	2 15/16"	1 1/8"	1 9/16"	1 3/16"	1 9/16"
131 LB. 24" U.P. PUNCH	552-7570	1	24"	2 15/16"	6 1/2"	5 1/8"	3 3/32"	2 1/2"	1 1/8"	1 9/16"	1 3/16"	1 3/16"
131 LB. 36" U.P. PUNCH	552-7601	4	36"	2 15/16"	6 1/2"	6"	3 3/32"	2 15/16"	1 3/16"	1 1/2"	1 1/8"	1 1/8"
132 LB. 28" S.P. PUNCH	552-7615	2	28"	4 15/16"	6 1/2"	5 1/8"	3 3/32"	2 1/2"	1 5/16"	1 9/16"	1 7/32"	1 3/16"
132 LB. 36" U.P. PUNCH	552-7662	3	36"	2 7/16"	6"	7 1/8"	3 3/32"	3 1/2"	1 1/8"	1 13/32"	1 1/16"	1 13/32"
133 LB. 36" U.P. PUNCH	552-7693	4	36"	2 7/16"	6"	7 1/8"	3"	3 1/2"	1 1/8"	1 1/2"	1 1/8"	1 1/8"
136 LB. 36" U.P. PUNCH	552-7662	3	36"	2 7/16"	6"	7 1/8"	3 3/32"	3 1/2"	1 1/8"	1 13/32"	1 1/16"	1 1/16"
136 LB. 28" S.P. PUNCH	552-7700	2	28"	4 15/16"	6 1/2"	5 1/8"	3 3/32"	2 1/2"	1 3/16"	1 9/16"	1 7/32"	1 3/16"
136 LB. 36" S.P. PUNCH	552-9175	3	36"	2 7/16"	6 1/2"	5 1/8"	3 3/32"	2 1/2"	1 3/16"	1 9/16"	1 7/32"	1 3/16"
136 LB. 36" DRGW PUNCH	552-7631	4	36"	3"	6"	6"	3 3/32"	2 15/16"	1 1/8"	1 9/16"	1 3/16"	1 3/16"
132-141 LB. 36" UP PUNCH	552-7650	3	36"	2 7/16"	6"	7 1/8"	3 9/32"	3 1/2"	1 1/4"	1 1/2"	1 3/16"	1 3/16"

HIGH RELIEF JOINT BAR	ITEM NO.	HOLE PATTERN	A	C	D	E	F	G	H	J	K	L
115, 119 LB. 36" U.P. PUNCH	552-7479	3	36"	2 7/16"	6"	7 1/8"	2 7/8"	3 1/2"	1 1/8"	1 13/32"	1 1/16"	1 1/16"
133 LB. 36" U.P. PUNCH	552-7694	4	36"	2 7/16"	6"	7 1/8"	3"	3 1/2"	1 1/8"	1 1/2"	1 1/8"	1 1/8"
132-141 LB. 36" UP PUNCH	552-7680	3	36"	2 7/16"	6"	7 1/8"	3 9/32"	3 1/2"	1 1/4"	1 1/2"	1 3/16"	1 3/16"

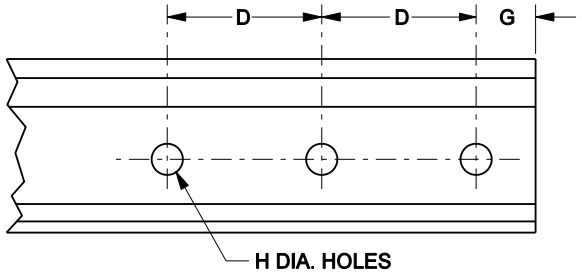

RAIL DRILLING

NOTES:
1. STAGGERED JOINTS: RAIL MUST BE LAID WITH STAGGERED JOINTS IN MAIN TRACKS, EXCEPT WHERE BALANCING THE JOINTS FOR SWITCH LEADS, ROAD CROSSINGS, BRIDGE ENDS,AND SIGNAL CIRCUITS, AND IN SECONDARY TRACKS EXCEPT WHERE USE OF PREFABRICATED TRACK PANELS IS AUTHORIZED.
2. RAIL JOINT LOCATION: WHEN LAYING RAIL, JOINTS MUST NOT BE LOCATED IN ROAD CROSSINGS, BRIDGE DECKS, OR ON THE ENDS OF BRIDGES.
3. FOR RAIL DETAILS, SEE STD DWGS. (700 SERIES) FOR HARDWARE, SEE STD DWG 0950. SEE PAGE 1 FOR THE REST OF THIS DWG.

UNION PACIFIC RAILROAD ENGINEERING STANDARDS

MISCELLANEOUS JOINT BARS

ADOPTED: MARCH 1, 1998
REVISED: MAY 18, 2005
FILE NO.: 0904F

STD DWG 0904F PAGE 2 OF 2

STD DWG 0904F PAGE 2 OF 2

Copyright © 2005 by Union Pacific Railroad

CONFORMED

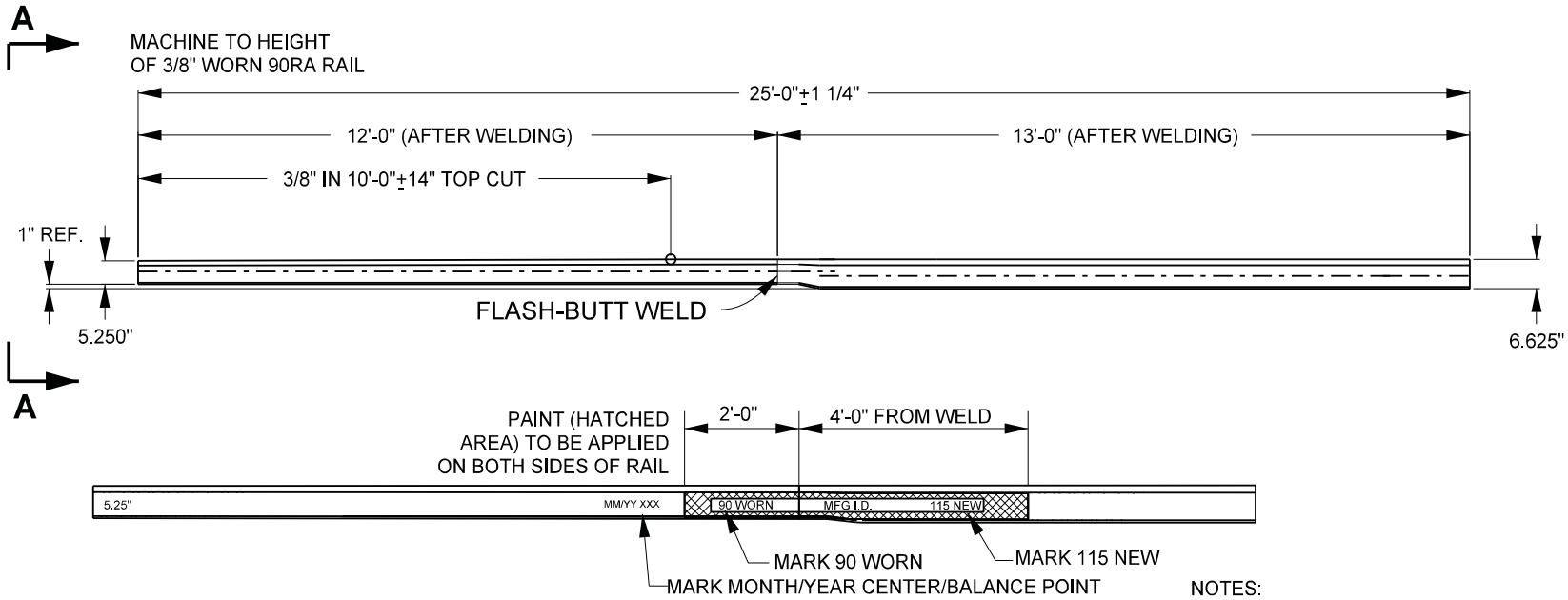

PAINT DETAIL

WHITE STENCIL, 2" BLOCK LETTERING
BOTH SIDES, LOCATION AS SHOWN.

NOTES:

1. PAINT WEB OF RAIL AS SHOWN IN PAINT DETAIL, SOLID WHITE ON BOTH SIDES. USING 2" BLOCK STENCIL AND BLACK PAINT, MARK THE APPROPRIATE RAIL TRANSITIONS, AT EACH END OF THE WHITE PAINTING. ADDITIONALY, ON ONE SIDE ONLY, PERMANENTLY AFFIX MANUFACTURERS I.D. TAG SHOWING APPROPRIATE DATA, INCLUDING MONTH AND YEAR IN PAINTED AREA.

2. AFTER FLASH BUTT WELD, 36" STRAIGHT EDGE CENTERED ON WELD MUST:
   a) ALONG TOP OF RAIL HAVE NO DIP AND NO CROWN GREATER THAN 0.060".
   b) ALONG BASE OF RAIL HAVE NO HORIZONTAL BOW GREATER THAN 0.060".

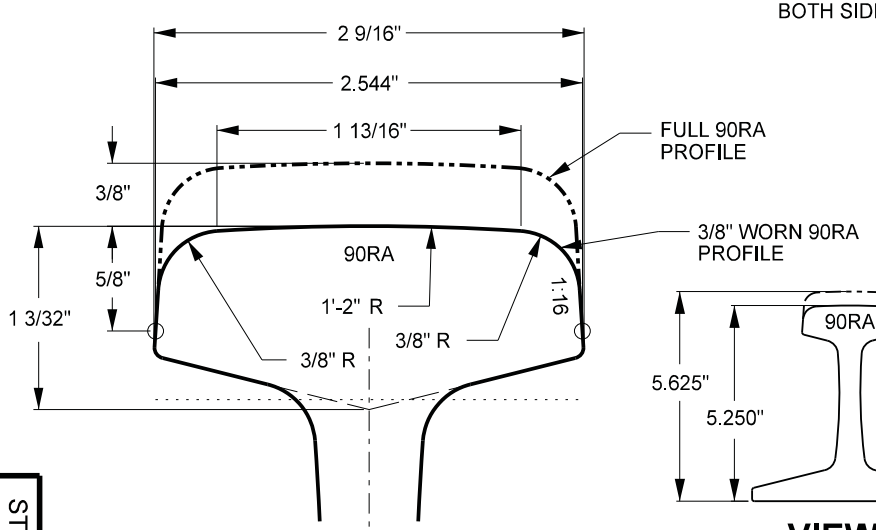

TOP RADII DETAIL

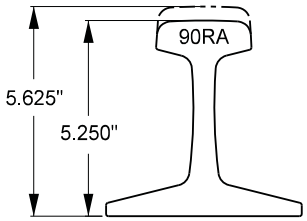

VIEW A

3/8" DEEP HEAD CUT
TO SIMULATE 3/8" WEAR

DESCRIPTION	ITEM NO.
LH RAIL	552-2219
RH RAIL	552-2220

UNION PACIFIC RAILROAD ENGINEERING STANDARDS

COMPROMISE TRANSITION RAIL 115 LB. TO 90 LB. WORN

UNION PACIFIC

APPROVED: VP ENGINEERING
ADOPTED: JULY 16, 2012
REVISED:
FILE NO.: 0942

STD DWG
0942

STD DWG
0942

CONFORMED

Copyright © 2012 by Union Pacific Railroad

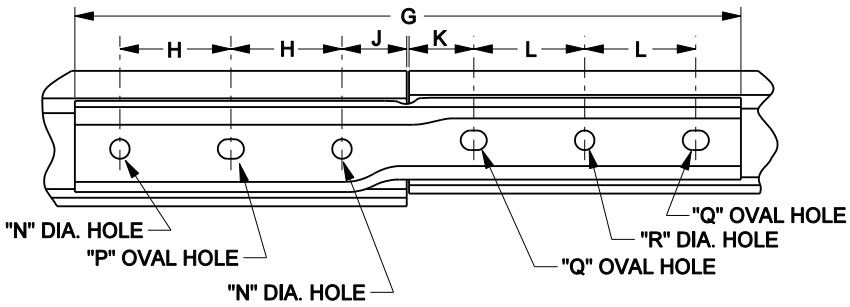

6-HOLE OUT BAR DETAIL

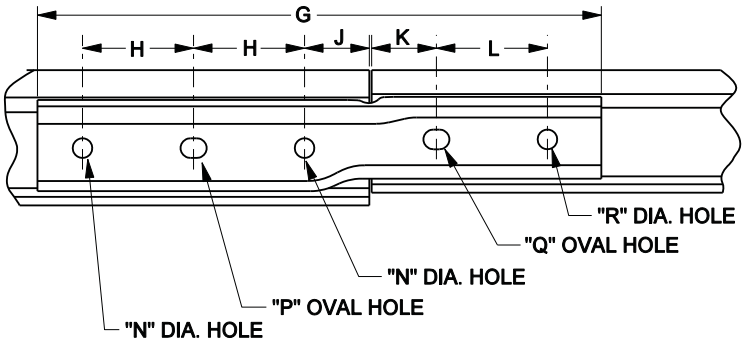

5-HOLE OUT BAR DETAIL

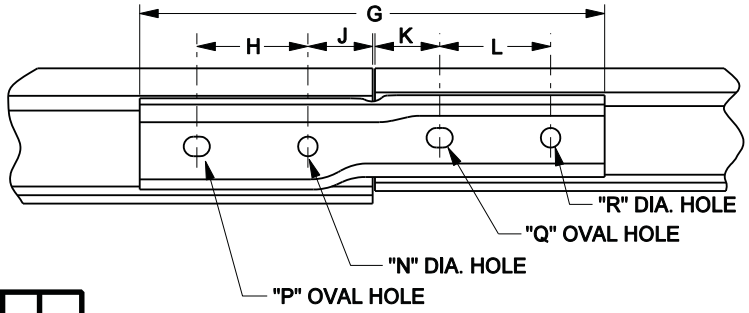

4-HOLE OUT BAR DETAIL

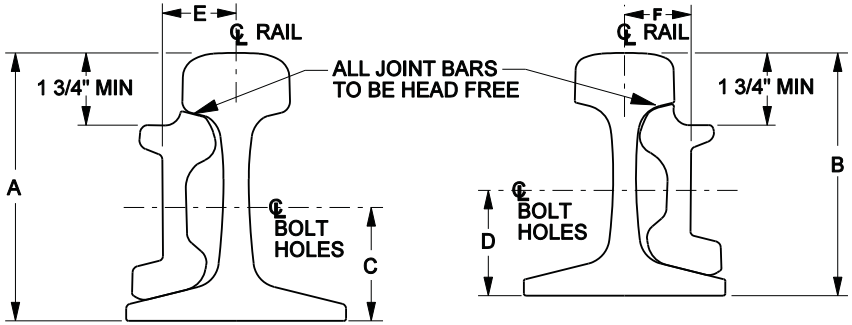

LARGER RAIL

SMALLER RAIL

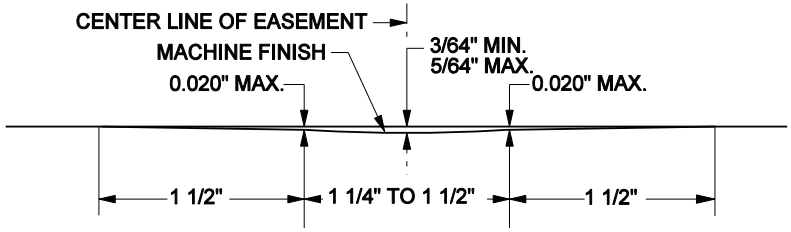

TYPICAL EASEMENT PROFILE

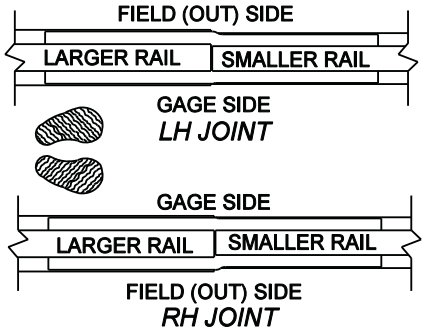

HANDED JOINTS

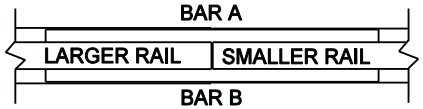

NON-HANDED JOINTS

NOTES:

1. AT PERMANENT CONNECTIONS OF DIFFERENT RAIL SECTIONS, COMPROMISE JOINTS OR COMPROMISE WELDS SHALL BE INSTALLED IN ACCORDANCE WITH CHIEF ENGINEER'S INSTRUCTIONS AND WHERE PRACTICABLE, THEY SHALL NOT BE LOCATED IN MAIN TRACK CURVE OR OPEN DECK BRIDGES, OR IN TURNOUTS.
2. STD DRAWINGS SHOULD BE REFERENCED FOR MANUFACTURING PURPOSE AND TO IDENTIFY THE ROUND AND OVAL HOLE PATTERNS.
3. SEE PAGE 2 FOR DIMENSION CHART & DETAILS FOR TRACK BOLTS, SEE STD DWG 0950

UNION PACIFIC RAILROAD ENGINEERING STANDARDS

COMPROMISE JOINTS

ADOPTED: DEC. 31, 1996
REVISED: JUNE 9, 2004
FILE NO.: 0948B

STD DWG
0948B
PAGE 1 OF 2

STD DWG
0948B
PAGE 1 OF 2

CONFORMED

Copyright © 2004 by Union Pacific Railroad

RAIL TO RAIL	RH ITEM	LH ITEM	BAR TYPE	A (NEW)	A (WORN)	B (NEW)	B (WORN)	C	D	E	F	G	H	J	K	L	N	P	Q	R	C.E. DWG NO.
136RE - 133RE	552-4370		6 HOLE	7 5/16"	—	7 1/16"	—	3 3/32"	3"	2"	2"	38"	6"	3 1/2"	3 1/2"	6"	1 1/8"	1 1/8" x 1 1/2"	1 1/8" x 1 1/2"	1 1/8"	83859
136RE - 132RE	552-4309		6 HOLE	7 1/4"	—	7"	—	3 3/32"	3 3/32"	1 31/32"	1 31/32"	36"	6"	3 1/2"	3 1/2"	6"	1 1/16"	1 1/16" x 1 13/32"	1 1/16" x 1 13/32"	1 1/16"	84017
136RE - 119RE	552-4186	552-4155	6 HOLE	7 5/16"	—	6 13/16"	—	3 3/32"	2 7/8"	1 31/32"	1 13/16"	36"	6"	3 1/2"	3 1/2"	6"	1 1/16"	1 1/16" x 1 13/32"	1 1/16" x 1 13/32"	1 1/16"	83829
SP136RE-119RE	552-9365	552-9225	6 HOLE	7 5/16"	—	6 13/16"	—	3 3/32"	2 7/8"	2"	2"	36"	6 1/2"	2 1/2"	2 1/2"	6 1/2"	1 7/32"	1 7/32" x 1 9/16"	1 7/32" x 1 9/16"	1 7/32"	—
D&RGW136RE-119RE	552-4187	552-4188	6 HOLE	7 5/16"	—	6 13/16"	—	3 3/32"	2 7/8"	2"	2"	36"	6"	2 15/16"	2 15/16"	6"	1 3/16"	1 3/16" x 1 9/16"	1 3/16" x 1 9/16"	1 3/16"	—
136RE - 115RE	552-4124	552-4093	6 HOLE	7 5/16"	—	6 5/8"	—	3 3/32"	2 7/8"	1 31/32"	1 13/16"	36"	6"	3 1/2"	3 1/2"	6"	1 1/16"	1 1/16" x 1 13/32"	1 1/16" x 1 13/32"	1 1/16"	83729
136RE - 112RE	552-4063	552-4032	6 HOLE	7 5/16"	—	6 17/32"	6 11/32"	3 3/32"	2 7/8"	2"	2"	36"	6"	3 1/2"	2 1/2"	6 1/2"	1 1/8"	1 1/8" x 1 1/2"	1 1/8" x 1 1/2"	1 1/8"	83862
SP136RE-SP110RE	552-9385	552-9285	4 HOLE	7 5/16"	—	6 1/4"	6 1/16"	3 3/32"	2 5/8"	2"	1 13/16"	26"	6 1/2"	2 1/2"	2 11/16"	5 1/2"	1 7/32"	1 7/32" x 1 9/16"	1 5/32" x 1 3/8"	1 5/32"	—
SP136RE-SP90ARA	552-9375	552-9280	4 HOLE	7 5/16"	—	5 5/8"	5 3/8"	3 3/32"	2 19/32"	2"	1 23/32"	26"	6 1/2"	2 1/2"	2 11/16"	5 1/2"	1 7/32"	1 7/32" x 1 9/16"	1 1/32" x 1 1/4"	1 1/32"	—
133RE - 132RE	552-3939		6 HOLE	7 1/16"	—	7 1/8"	—	3"	3 3/32"	2"	2"	38"	6"	3 1/2"	3 1/2"	6"	1 1/8"	1 1/8" x 1 1/2"	1 1/8" x 1 1/2"	1 1/8"	83905
133RE - 131RE	552-3909		6 HOLE	7 1/16"	—	7 1/8"	—	3"	3 3/32"	2"	2"	38"	6"	3 1/2"	2 15/16"	6 1/2"	1 1/8"	1 1/8" x 1 1/2"	1 1/8" x 1 1/2"	1 1/8"	83885
133RE - 119RE	552-3878	552-3847	6 HOLE	7 1/16"	—	6 13/16"	—	3"	2 7/8"	2"	1 13/16"	36"	6"	3 1/2"	3 1/2"	6"	1 1/8"	1 1/8" x 1 1/2"	1 1/16" x 1 13/32"	1 1/16"	83726
133RE - 115RE	552-3816	552-3786	6 HOLE	7 1/16"	—	6 5/8"	—	3"	2 7/8"	2"	1 13/16"	36"	6"	3 1/2"	3 1/2"	6"	1 1/8"	1 1/8" x 1 1/2"	1 1/16" x 1 13/32"	1 1/16"	83721
133RE - 112RE	552-3693	552-3663	6 HOLE	7 1/16"	—	6 17/32"	6 11/32"	3"	2 7/8"	2"	2"	36"	6"	3 1/2"	2 1/2"	6 1/2"	1 1/8"	1 1/8" x 1 1/2"	1 1/8" x 1 1/12"	1 1/8"	83863
133RE - 110RE	552-3632	552-3601	6 HOLE	7 1/16"	—	6 1/4"	—	3"	2 5/8"	2"	2"	36"	6"	3 1/2"	2 11/16"	5 1/2"	1 1/8"	1 1/8" x 1 1/2"	1 1/8" x 1 1/2"	1 1/8"	83824
133RE - 100RE	552-3570	552-3539	5 HOLE	7 1/16"	—	6"	—	3"	2 1/2"	2"	1 13/16"	30"	6"	3 1/2"	2 5/8"	5 1/2"	1 1/8"	1 1/8" x 1 1/2"	1 1/8" x 1 13/32"	1 1/8"	83787
133RE - 90RA	552-3509	552-3478	5 HOLE	7 1/16"	—	5 17/32"	5 11/32"	3"	2 19/32"	2"	1 23/32"	30"	6"	3 1/2"	2 5/8"	5 1/2"	1 1/8"	1 1/8" x 1/12"	1" x 1 1/4"	1"	83849
132RE - 119RE	552-3447	552-3416	6 HOLE	7 1/8"	—	6 3/4"	6 11/16"	3 3/32"	2 7/8"	2"	2"	36"	6"	3 1/2"	3 1/2"	6"	1 1/16"	1 1/16" x 1 13/32"	1 1/16" x 1 13/32"	1 1/16"	83884
132RE - 115RE	552-3386	552-3355	6 HOLE	7 1/8"	—	6 5/8"	—	3 3/32"	2 7/8"	2"	1 13/16"	36"	6"	3 1/2"	3 1/2"	6"	1 1/16"	1 1/16" x 1 13/32"	1 1/16"x 1 13/32"	1 1/16"	83850
119RE - 115RE	552-2678		6 HOLE	6 11/16"	6 9/16"	6 1/2"	6 3/8"	2 7/8"	2 7/8"	2"	1 7/8"	36"	6"	3 1/2"	3 1/2"	6"	1 1/16"	1 1/16" x 1 13/32"	1 1/16" x 1 13/32"	1 1/16"	83918
115RE - 112RE	552-2401		5 HOLE	6 5/8"	—	6 17/32"	6 11/32"	2 7/8"	2 7/8"	1 7/8"	1 7/8"	30"	6"	3 1/2"	2 1/2"	6 1/2"	1 1/16"	1 1/16" x 1 13/32"	1 1/16" x 1 13/32"	1 1/16"	83864
115RE - 100RE	552-2271	552-2267	5 HOLE	6 5/8"	6 1/2"	6"	5 13/16"	2 7/8"	2 3/4"	1 13/16"	1 13/16"	30"	6"	3 1/2"	2 1/2"	6 1/2"	1 1/16"	1 1/16" x 1 13/32"	1 1/16" x 1 13/32"	1 1/16"	84015
115RE - 110RE	552-2370	552-2339	5 HOLE	6 5/8"	—	6 1/8"	6"	2 7/8"	2 5/8"	1 13/16"	1 13/16"	30"	6"	3 1/2"	2 29/32"	6"	1 1/16"	1 1/16" x 1 13/32"	1 1/16" x 1 7/16"	1 1/16"	83722
115RE - 100RE	552-2309	552-2278	4 HOLE	6 5/8"	—	6"	—	2 7/8"	2 39/64"	2"	2"	26"	6 1/2"	2 1/2"	2 11/16"	5 1/2"	1 5/32"	1 1/8" x 1 3/8"	1 1/8" x 1 3/8"	1 5/32"	83881
112RE - 100RE	552-1867	552-1857	4 HOLE	6 5/8"	6 5/16"	5 15/64"	5 23/64"	2 7/8"	2 5/8"	1 13/16"	1 13/16"	24"	6 1/2"	2 1/2"	2 21/32"	6"	1 1/16"	1 1/16" x 1 13/32"	1 1/16" x 1 13/32"	1 1/16"	84003
115RE - 90RA	552-2247	552-2216	5 HOLE	6 5/8"	—	5 9/16"	5 7/16"	2 7/8"	2 37/64"	1 13/16"	1 9/16"	30"	6"	3 1/2"	2 29/32"	6"	1 1/16"	1 1/16" x 1 13/32"	1 1/16" x 1 7/16"	1 1/16"	83723
115RE - 85MR	552-2106	552-2155	5 HOLE	6 5/8"	—	5 7/32"	—	2 7/8"	2 21/128"	1 13/16"	1 3/4"	30"	6"	3 1/2"	2 13/32"	5"	1 1/16"	1 1/16" x 1 13/32"	1 1/16" x 1 7/16"	1 1/16"	83724

NOTES:
1. SEE PAGE 1 FOR NOTES AND DETAILS.

UNION PACIFIC RAILROAD ENGINEERING STANDARDS

COMPROMISE JOINTS

ADOPTED: DEC. 31, 1996
REVISED: JUNE 9, 2004
FILE NO.: 0948B

STD DWG
0948B
PAGE 2 OF 2

STD DWG
0948B
PAGE 2 OF 2

Copyright © 2004 by Union Pacific Railroad

CONFORMED

BOLT SIZE	RAIL SIZE	HEAD DEPTH A	SHOULDER DEPTH B	LENGTH UNDER HEAD C	THREAD LENGTH D	NOMINAL DIE OVER THREAD E	SHANK DIA F	HEAD DIMENSIONS G	HEAD DIMENSIONS H	SHOULDER HEIGHT J	HEAD DIAMETER K	NUT WIDTH L	THREADS PER INCH	ITEM NUMBER
1 1/8 X 6 1/2"	SP & DRGW 112-136 UP 136 & 141	45/64"	5/8"	6 1/2"	2 1/2"	1 1/8"	1 1/16"	43/64"	1 55/64"	1 17/32"	1 57/64"	1 11/16"	A.N.C. 7 THREAD	550-9035
1 1/16 X 6"	UP 112, 131 & 133	5/8"	9/16"	6"	2 3/8"	1 1/16"	1"	19/32"	1 5/8"	1 3/8"	1 11/16"	1 5/8"	A.N.C. 8 THREAD	550-6344
1 1/16" X 5 1/2"	UP 110	5/8"	9/16"	5 1/2"	2 3/8"	1 1/16"	1"	19/32"	1 5/8"	1 3/8"	1 11/16"	1 5/8"	A.N.C. 8 THREAD	550-6226
1" X 6"	136,132,119, 115,CNW 112	5/8"	9/16"	6"	2 1/4"	1"	15/16"	19/32"	1 5/8"	1 3/8"	1 11/16"	1 5/8"	A.N.C. 8 THREAD	550-5873
1" X 5 1/2"	CNW 110 SSW 115	5/8"	9/16"	5 1/2"	2 1/4"	1"	15/16"	19/32"	1 5/8"	1 3/8"	1 11/16"	1 5/8"	A.N.C. 8 THREAD	550-5756
15/16" X 4 5/8"	UP 90	35/64"	1/2"	4 5/8"	2 1/8"	15/16"	7/8"	33/64"	1 25/64"	1 7/32"	1 31/64"	1 1/2"	9 THREADS	550-5404
7/8" X 5"	UP CNW 90	35/64"	1/2"	5"	2"	7/8"	13/16"	33/64"	1 25/64"	1 7/32"	1 31/64"	1 7/16"	9 THREADS	550-5050

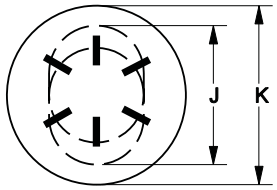

BOLT HEAD

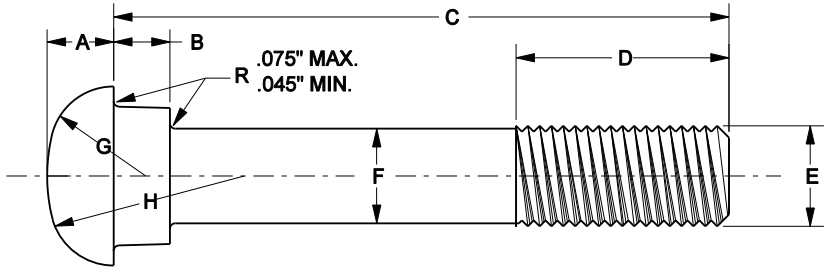

BOLT

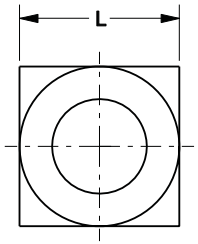

SQUARE NUT

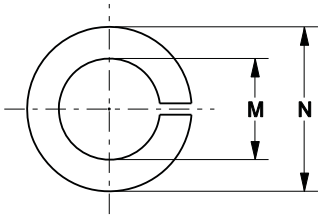

SPLIT WASHER

ITEM NO.	NOMINAL WASHER SIZE	INSIDE DIAMETER M	OUTSIDE DIAMETER N
550-7060	7/8"	.905"	1.576"
550-7177	15/16"	.970"	1.688"
550-7295	1"	1.042"	1.799"
550-7413	1 1/16"	1.107"	1.910"
550-7648	1 1/8"	1.188"	2.218"

NOTES:
1. ITEM NUMBERS IN BOLT CHART ARE TO INCLUDE APPROPRIATE BOLT, WASHER AND NUT.
2. TRACK BOLTS TO CONFORM TO SAE J429 GRADE 8 SPECIFICATIONS.
3. NUTS TO HAVE 2H PHYSICAL REQUIREMENTS.
4. TENSILE STRENGTH:
   150,000 PSI
   YIELD STRENGTH:
   130,000 PSI
   ELONGATION 12% MIN.
   REDUCTION OF AREA 35% MIN.
   PROOF LOAD 120,000 PSI
   ALL THREADS TO BE FREE FIT.

UNION PACIFIC RAILROAD ENGINEERING STANDARDS

TRACK BOLT

UNION PACIFIC

ADOPTED: FEB. 6, 1997
REVISED: OCT. 10, 2005
FILE NO.: 0950H

STD DWG
0950H

STD DWG 0950H

Copyright © 2005 by Union Pacific Railroad

CONFORMED

BNSF ITEM NUMBERS		
ITEM NO.	WT	SPIKES/KG
527570005	200	241
527570014	-	BULK

CSX ITEM NUMBERS		
ITEM NO.	WT	SPIKES/KG
013.8250325.1	100	120
013.8250327.1	-	BULK

CN ITEM NUMBERS		
ITEM NO.	WT	SPIKES/KG
01-03-303	200	241

NS ITEM NUMBERS		
ITEM NO.	WT	SPIKES/KG
640-903705	200	241

CP ITEM NUMBERS		
ITEM NO.	WT	SPIKES/KG
002840231	50	62
002840256	-	BULK

UPRR ITEM NUMBERS		
ITEM NO.	WT	SPIKES/KG
550-6707	150	180
550-6710	-	BULK

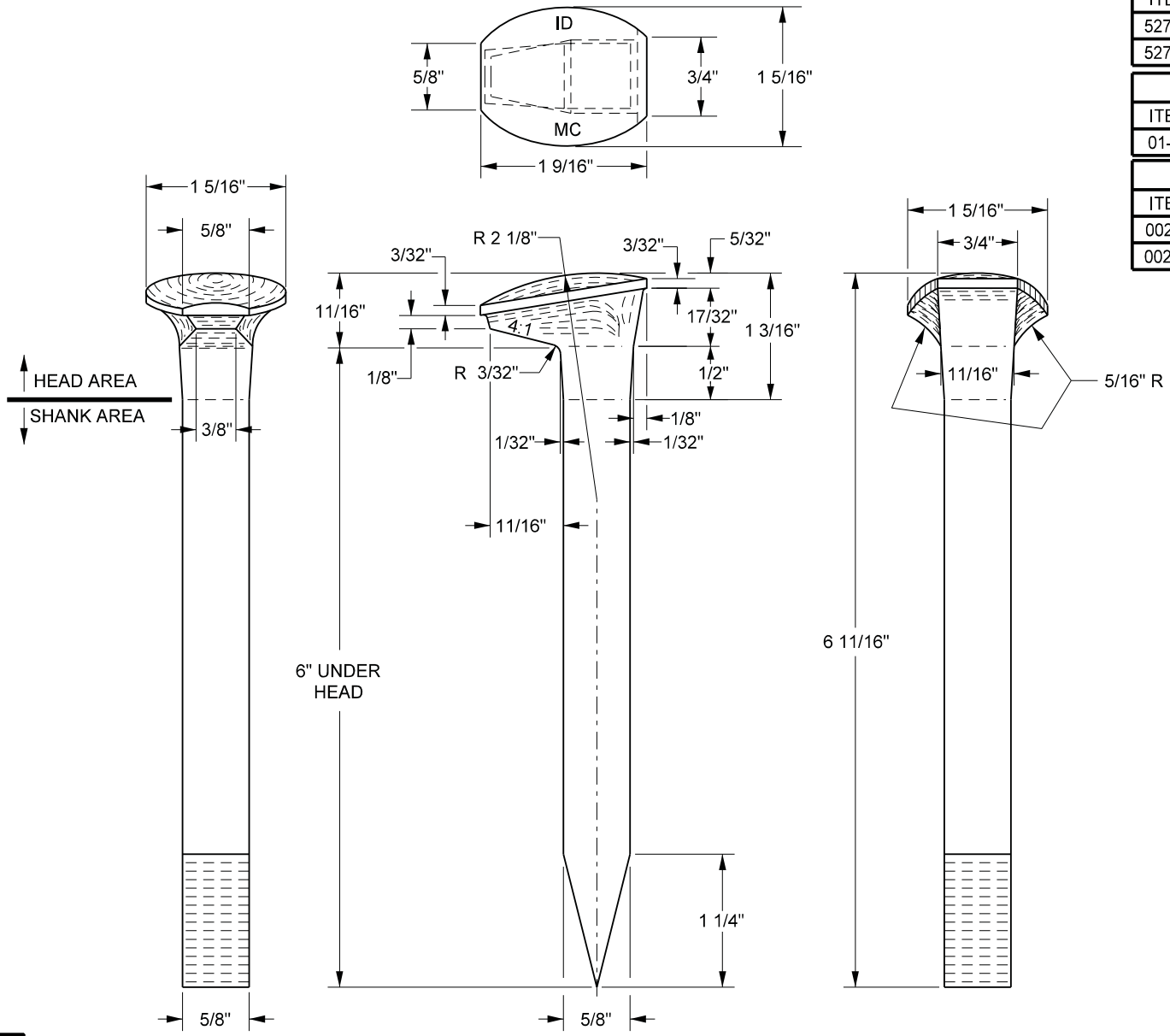

NOTES:

1. MATERIAL AND WORKMANSHIP TO BE IN ACCORDANCE WITH CURRENT AREMA MANUAL REQUIREMENTS FOR MEDIUM CARBON SPIKES.
2. PERMISSIBLE SHANK STRAIGHTNESS VARIATION, MEASURED IN EITHER PLANE, SHALL NOT EXCEED 0.0313".
3. MANUFACTURER'S I.D. AND THE LETTERS "MC" SHALL BE PRESSED ON THE HEAD OF EACH SPIKE WHILE BEING FORMED.
4. WEIGHT = APPROXIMATELY 0.83 LBS. EACH.

BNSF RAILWAY CN CSX NS NORFOLK SOUTHERN UNION PACIFIC

COMMON STANDARDS

6" TRACK SPIKE

6" CUT TRACK SPIKE

FILE OWNER: UPRR	DATE: JULY 16, 2012
REV. NO.: 3	DWG NO: 130005

130005

CONFORMED

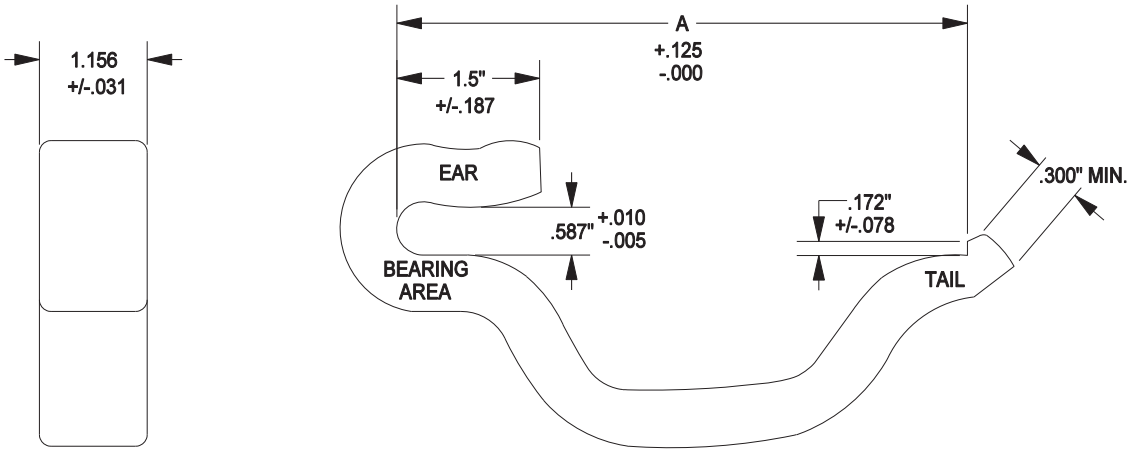

NOTES:
1. MATERIAL: HIGH CARBON STEEL

2. HEAT TREAT TO Rc 34-47
   TARGET RANGE Rc 39-44

3. ALL DIMENSIONS ARE MINIMUM UNLESS OTHERWISE SPECIFIED.

4. TYPICAL CHEMISTRY: CARBON .58-.90, MANGANESE .7-1.1, SILICON .5 MAX

RAIL BASE SIZE	A	BNSF ITEM NO.	CN ITEM NO.	CSX ITEM NO.	UPRR ITEM NO.	WEIGHTS
5 1/2"	5.625"	520130009	01-30-207	013.0161200.1	550-1630	1.96 LBS.
6"	6.125"	520130012	01-30-208	013.0160000.1	550-1650	2.094 LBS.

BNSF RAILWAY

CN CSX UNION PACIFIC

BAR STOCK ANCHOR FOR 5 1/2" AND 6" BASE RAIL

FILE OWNER: UPRR | DATE: JUNE 1, 2005

REV. NO.: 1 | DWG NO: 135010

135010

CONFORMED

Project 3151 -
L.I.D #4 - Area
SoF City Hall
between railroad
track + 680

13

CONFORMED

RECEIVED
MAR 13 1972

March 7, 1972
Job No. 23-238-70

Project 3151

	Dist.	Init.
1.		
2.		
3.		
4.		
File		
X-File		

3151

SOILS INVESTIGATION

MILPITAS L.I.D. 71-4
MILPITAS, CALIFORNIA

FOR

BISSELL AND KARN

JOB NO. 23-238-70 MARCH 7, 1972

62-79 on Index Map

CONFORMED

GEOLABS-CALIFORNIA, INC.

March 7, 1972
Job No. 23-238-70

SOILS INVESTIGATION

Milpitas L.I.D. 71-4
Milpitas, California

For

BISSELL AND KARN

INTRODUCTION

This report presents the results of our soils investigation performed for the subject project. Included in the investigation were foundation design criteria for the two bridges, and R-Value for pavement design on the streets to be constructed. The purpose of this investigation was to determine the nature of the soils underlying the site, to ascertain their engineering properties and to provide design and construction recommendations.

The scope of work performed for this investigation included:

1. Foundation investigations for the proposed crossings of Ames Avenue and Yosemite Drive at Berryessa Channel in Milpitas, California. The scope of work for these foundation investigations is as follows:

   A. Drilling, logging and sampling 4 exploratory borings to depths of 80 to 85 feet.

   B. Performing index and engineering properties tests on representative soil samples.

   C. Engineering analyses to develop foundation design criteria.

2. R-Value sampling and testing of a part of 16 exploratory test pits along the proposed city streets included in this project.

The location of the exploratory borings and the test pits are shown on Plate 1. The Boring Logs are presented on Plates 3 through 6, and the laboratory test data are presented on Plates 7 through 18.

CONFORMED

PLANNED CONSTRUCTION

The proposed project consists of the design and construction of bridge crossings of Berryessa Channel at Ames Avenue and Yosemite Drive and the design and construction of:

1. Wrigley Drive between Calaveras Road and Landess Avenue.

2. The extension of Ames Avenue westerly to Wrigley Drive.

3. The extension of Yosemite Drive westerly to Wrigley Drive.

4. The extension of A Street westerly and southerly to Yosemite Drive.

STRUCTURAL CONSIDERATIONS

The two bridges will cross Berryessa Channel, one at Ames Avenue and the other at Yosemite Drive. Information concerning the future improvements of the channel was furnished by Mr. Ed Ferguson of the Santa Clara County Flood Control and Water District. The channel will, at some time in the future, be widened to 44 feet bottom width with 2 to 1 side slopes. At the present time, lining the channel is not planned.

Information concerning the bridges and street criteria was supplied by Mr. Bob Crossett of Bissell and Karn, Inc. The bridges are to be of reinforced concrete construction, both bridges being 2 span design at 32 feet per span. For the Yosemite Drive bridge, the design loads are approximately as follows:

1. 530 kips for each abutment.

2. 1155 kips for the center pier.

The design structural loads are as follows for the Ames Avenue bridge:

1. 387 kips for each abutment.

2. 843 kips for the center pier.

CONFORMED

SITE CONDITIONS

The subject site is located between Calaveras Boulevard and Landess Avenue, and between Dempsey Railroad tracks and Freeway 680, north-south and west-east, repsectively, as shown on Plate 1. The surface of the site is relatively flat with total relief of approximately 40 feet. Most of the surface of the subject site has been disked to a depth of 1 to 1½ feet. Berryessa Channel runs north-south through the subject site and varies from 20 to 30 feet in width and 10 to 12 feet in depth.

The subject site is located immediately southeast of the intersection of Calaveras Road and the Western Pacific Railroad tracks in Milpitas, California. It is bounded by the Calaveras Road to the north, Dempsey Road to the east, Landess Avenue to the south and the Western Pacific Railroad tracks to the west. The surface of the site slopes gently downward to the northwest at approximately 3/4 percent with maximum relief across the site of 45 feet. The site is presently unimproved except for Berryessa Channel improvements.

FIELD EXPLORATION

The two bridge sites were explored on January 18, 19, and 20, 1972, by drilling 4 exploratory test borings with a truck-mounted drill rig. Borings 1, 2, and 3 were 80 feet in depth and Boring 4 was drilled to a depth of 85 feet. The boring locations are shown on Plate 1. Borings 1 and 3 were drilled on the west and east sides of Berryessa Channel, respectively, along the future alignment for Yosemite Drive. Borings 2 and 4 were located as close as possible to the proposed location of the bridge across Berryessa Channel at Ames Avenue, on the west and east sides of the channel, respectively. All borings were drilled using rotary wash techniques (drillers mud). Two and one-half inch I.D. ring samples were taken at selected depths with a Geolabs ring sampler driven by a 300 pound weight (slip jars) falling 18 inches. The subsurface profiles encountered were continuously logged by our field engineer and classified by visual examination in accordance with the Unified Soil Classification System. Portions of each sample were placed in moisture-proof containers and transported to our laboratory for further evaluation and testing.

CONFORMED

On January 21, 1972, our field representative excavated a total of 16 backhoe exploratory test pits along the proposed future street alignments on the subject site. The test pits varied in depths from 3 to 5 feet and the locations are shown on Plate 1. The subsurface soil profile encountered was logged by our field representative, and the exploratory test pit descriptions are found in Appendix A. Representative bulk soil samples were obtained for further evaluation and laboratory testing. Ten bulk samples were selected for R-Value testing, and the results are also found in Appendix A.

LABORATORY TESTS

Classification

The field classification of the exploratory test borings was verified in the laboratory, also in accordance with the Unified Soil Classification System.

Natural Moisture Content and Dry Density

Natural water content and dry density determinations were performed on most of the ring samples. In determining the natural dry density, the ends of the specimens were trimmed to obtain a smooth square surface. After measuring the volume and wet weight, the specimens were placed in an oven to remove all moisture. The oven-dried samples were then weighed and the moisture content and dry density calculated. The dry unit weights and moisture contents determined are shown on the attached "Boring Logs".

Shear Tests

Shear tests were performed in the direct shear machine which is of the strain control type. The rate of deformation is approximately 0.05 inches per minute. A portion of the samples were sheared under varying confining loads in order to determine the shear strength at confining pressures corresponding to the design overburden pressure. Another portion of the samples were sheared under varied confining loads in order to determine the Coulomb shear strength parameters, cohesion and angle of internal friction. These samples were tested in an artificially saturated condition. Results of the direct shear tests are plotted on the attached Shear Test Diagrams, Plates 7 through 14.

CONFORMED

Consolidation Tests

Consolidation tests were performed on samples of the underlying soils to determine their settlement characteristics. Settlement predictions of the soil's behavior under load are made on the basis of the consolidation tests. The consolidation apparatus is designed to receive one of the one-inch high rings. Loads are applied in several increments in a geometric progression, and the resulting deformations are recorded at selected time intervals. Porous stones are placed in contact with the top and bottom of each specimen to permit addition and release of pore fluid. Results are plotted on the "Consolidation-Pressure Curve", Plates 15 and 16.

Atterberg Limits

Liquid and plastic limits of a selected sample were determined on that portion of soil passing the #40 sieve, in accordance with ASTM Test Designations D 423-66 and D 424-59. The results of the Atterberg Limits Tests are presented on Plate 17.

Sieve Analysis

Grain-size distribution was determined for a soil sample by performing sieve analysis in accordance with ASTM Test Designation D 422-63, the results are presented on Plate 18.

Hveem Stabilometer Test ("R"-Value)

To provide paving recommendations on the site, Hveem Stabilometer Tests (State of California Test Method No. California 301-F) were performed on bulk samples from locations on the site as shown on Plate 1 to determine the R-Value of the on-site soils. The results of the tests are presented on Plates 19 through 28.

SOIL CONDITIONS

Based upon our exploratory borings and test pits, we believe that the site is underlain by the following approximate subsurface soil profile:

1. On each side of Berryessa Channel there is a one to three foot thickness of fill for the unimproved roads which parallel the channel. This material is a clayey, sandy gravel, which is light brown in color and loose to medium dense in relative density.

CONFORMED

2. Site of Bridge for Yosemite Drive:

A. The surficial layer of clayey gravel was underlain by 15 to 17 feet of high plasticity clay. These clays were dark brown to grey in color and often contained tan and rust colored streaks. The material was damp to moist, is considered highly expansive, and was firm to stiff in consistency.

B. The above layer was underlain by 33 to 34 feet of low moderate plasticity clays, sandy clays and clayey sands as shown on the "Boring Logs". These materials were typically tan to light brown in color with occasional streaks, and were firm to very stiff in consistency, and loose to dense in relative density.

C. The succeeding layer of soil consisted of approximately 25 feet of high plasticity clays. These clays changed in color from brown with occasional tan streaks to bluish-green with depth and occasionally contained sand and/or gravel. These materials were very stiff to hard in consistency.

D. The above high plasticity clays were underlain by light brown to tan moderate plasticity sandy clays and clayey sands. These materials were hard in consistency and dense in relative density.

3. Site of Proposed Bridge for Ames Avenue:

A. The one to three foot thick surficial clayey gravel layer is underlain by 16 to 17 feet of high plasticity clay. These clays were commonly grey to brown in color and often contained tan and rust colored streaks. The material was damp to moist, is considered highly expansive, and was firm to stiff in consistency.

B. The layer of high plasticity clay was underlain by 35 to 36 feet of low to moderate plasticity clays, sandy clays, and clayey sands. These materials were light brown to tan in color, and were stiff to very stiff in consistency and dense in relative density.

CONFORMED

C. The above layer was underlain by approximately 28 feet of high plasticity clays which varied in color from brown to bluish-green with depth. These materials also occasionally contained coarse sand and fine gravel and were very stiff to hard in consistency.

D. The high plasticity clays overlay light brown clayey sands and gravels which were very dense in relative density.

Ground Water

Borings were not left open for a sufficient period of time to observe stabilized water levels. Based on the levels observed in three of the borings one day after drilling each one, it is our opinion that the natural ground water surface is at, or below, twenty feet below the existing ground surface. This could fluctuate during winter and summer seasons.

CONCLUSIONS AND RECOMMENDATIONS

General

It is our opinion that the proposed bridges may be constructed on this site provided that the project design and construction incorporates the recommendations presented herein and further provided that they are supported on a driven pile foundation deriving support as recommended herein.

Pile Foundation

Due to the heavy loads induced by the reinforced concrete bridges, piles are necessitated to support the structures. On the basis of our analyses, we estimate that Class 45-2 Piles, as per page B2-1 of State of California-Division of Highways Standard Plans (January 1971 Edition), will have a minimum factor of safety against bearing failure of 2.5 for design loads of 45 tons if provided in the following lengths and tip elevation:

	Abutments		Center Pier	
	Pile Cut Off Elevation-Ft.	Pile Tip Elevation-Ft.	Pile Cut Off Elevation-Ft.	Pile Tip Elevation-Ft.
Ames Avenue	43	-7	32	-13
Yosemite Drive	35	-15	24	-21

CONFORMED

The capacities indicated represent the vertical downward capacity of single vertical piles and should be reduced by 50 percent in calculating the uplift capacity. The design capacities are for dead plus real live loads only. The capacities may be increased by 1/3 when considering short duration wind and seismic loading. While pile groups are not anticipated, if they are selected, we recommend a minimum spacing of 3½ feet between pile centers and a reduction in capacity in accordance with the Converse-Labarre formula for efficiency of piles within a group.

We expect that piles designed in accordance with the foregoing will experience a small amount of settlement as a result of soil consolidation below the pile tips. It is our opinion that this settlement will be less than 1 inch.

The cost of cutting off precast concrete piles to the desired cut-off elevation is significant and can be avoided by installing all piles for each bridge at the desired tip elevation and of appropriate length so that when driven to the desired tip elevation, the top of the pile is at the cut-off elevation.

With regard to installation, we recommend that piles be driven in fixed leads with a hammer which develops not less than 15,000 foot-pounds of energy per blow and that all piles for a given section be driven to within two feet of the same tip elevation, but not less than the elevation shown above. All piles should be accurately located (plus or minus 3 inches) and driven within ¼ inch per foot of vertical. Except as specifically noted in this paragraph, the piles should be installed in accordance with Section 49 of the State of California-Division of Highways Standard Specification, January 1971 edition. We recommend that the entire driving operation be observed and recorded by one of our engineers to ensure proper installation of the piles.

Lateral Design

Resistance to lateral loading may be provided by passive earth pressure or the sides of piles. The passive earth pressure may be computed as an equivalent fluid having a desntiy of 600 pounds per cubic foot with a maximum passive earth pressure of 6000 pounds per square foot.

Pavement Design

Sixteen test pits were excavated and bulk samples obtained along the proposed extensions of Wrigley Drive, Ames Avenue, Yosemite Drive and A Street. Ten "R"-Value tests were performed on representative bulk soil samples in accordance with Test Method No. California 301-F, the results of which are presented in Plates 19 through 28. The bulk of the samples tested had "R"-Values between 19 and 35

CONFORMED

with an overall high of 66 and low of less than 5. We recommend that the pavement sections be designed using an "R"-Value of 20 subject to the provision that those limited areas with "R"-Values less than 20 be identified during construction and that the section in such areas be locally increased as appropriate for a design "R"-Value of 5.

Plan and Specification Review and Cosntruction Inspection

The complexity of this site is sufficient to warrant review of the plans and specifications by this office to ensure that the intent of the recommendations contained herein are fully incorporated in the design and construction of this project. We recommend that the pile installation operation be inspected and certified by this office.

Seismic Considerations

The San Francisco Bay Area is recognized by geologists and seismologists as one of the most active seismic regions in the United States. The significant earthquakes which occur in the Bay Area are associated with crustal movements along well defined active fault zones. The traces of the well known San Andreas Rift Zone is located 15 miles southwest of the project site and the Hayward Fault is approximately one-half mile to the northeast of the site. We therefore believe that the probability of ground rupture on this site should not be a design consideration.

On the basis of recent studies, it is reasonable to assume that the subject site will be subjected to ground shaking from at least one moderate to severe earthquake during the design life. We recommend that this be considered in the design of this project, although we do not believe that it is necessary to take unusual design measures as compared to similar developments in the Bay Area.

INVESTIGATION LIMITATIONS

Our investigation was based on a surface reconnaissance, the drilling of four exploratory borings, sixteen exploratory tests pits for "R"-Value testing, laboratory tests, and engineering studies. Materials encountered in the borings are believed to be representative of the total area; however, the soil may vary in character

CONFORMED

between borings. The conclusions and recommendations contained herein are professional opinions derived in accordance with current standards of professional practice and no warranty is expressed or implied.

Respectfully submitted,

GEOLABS-CALIFORNIA, INC.

Richard T. Gomm
Staff Engineer

Frank Berlogar
Manager, RCE 20383

RTG:FB:bb

Enclosures: Plate 1 - Site Plan
Plate 2 -
Plates 3 through 6 - Boring Logs
Plates 7 through 14 - Shear Test Diagrams
Plates 15 through 16 - Consolidation-Pressure Curves
Plate 17 - Atterberg Limits
Plate 18 - Sieve Analysis
Plates 19 through 28 - Hveem Stabilometer Tests
Appendix A - Logs of Test Pits

CONFORMED

GEOLABS, INC.

3151

BORING LOG B-1

Drilling Date Jan. 18, 1972 Driving Wt. 300 lbs. Elevation 40 ft.

Job Milpitas I.I.D. 71-4 Drop 18 inches Work Order 23-238-70

Sample	Depth ft	Blows ft	Moisture %	Density pcf	Dr Unit Weight pcf	Depth ft	Graphic	USCS	Description
								GC GP	Clayey, sandy gravel, light brown, coarse grained, medium dense
2		5/10/13	12.0						
								CH	Gravelly clay, dark brown, high plasticity, moist, stiff
5		6/10/8	13.2	108.6		5			
								CL	Sandy clay, moderate plasticity, tan with occasional rusty brown streaks, damp, stiff (coarse sand to fine gravel)
								CH	Clay, light grey with white streaks, high plasticity, moist, stiff
8		5/9/13	20.7	98.0					
					10				
13		7/10/18	20.5	103.7					
								CH	Clay, brown with streaks, high plasticity, moist, very stiff
					15				
									Grading sandy
18		7/7/6	17.9	103.2				CL	Clay, light brown, low to moderate plasticity, very moist, stiff
					20				

CONFORMED

PLATE 3

GEOLABS, INC.

3151

BORING LOG B-1 (continued)

Drilling Date Jan. 18, 1972 Driving Wt. 300 lbs. Elevation 40 ft.

Job Milpitas I.I.D. 71-4 Drop 18 inches Work Order 23-238-70

Sample Depth ft	Blows/6"	Moisture Content %	Dry Unit Weight pcf	Depth ft	Test	Graphic Symbol	Description
						CL	Clay, light brown, low to moderate plasticity, very moist, stiff (continued)
23	12/12/16						
				25			
						GC SC	Grading sandy to gravelly
28	13/17/29	14.0	109.6			CL SC	Sandy clay, brown, moderate plasticity, moist, very stiff
				30		CL	Clay, tan with bluish grey and rusty brown streaks, moderate plasticity, moist, very stiff
33	10/15/20	16.8	107.2				
				35			
							Grading sandy
38	13/19/31	13.8	114.4				
				40			

CONFORMED

PLATE 3-A

GEOLABS, INC.

BORING LOG B-1 (continued)

Drilling Date Jan. 18, 1972 Driving Wt. 300 lbs. Elevation 40 ft.

Job Milpitas, I.I.D. 71-4 Drop 18 inches Work Order 23-238-70

Sample	Depth ft	Blows/ft	Moisture Content %	Dry Unit Weight pcf	Depth in feet	Graphic Log	Description
							Grading sandy (continued)
43		18/35/52	16.7	109.3			Sandy clay, light brown to tan, moderate plasticity, moist, very stiff
					45		
							Occasional coarse sand
48		26/38/45	17.6	107.1			
					50		
						CH	Clay, brown with occasional tan streaks, high plasticity, moist, hard
53		39/46	20.0	103.2			
					55		
							Grading gravelly
58		45/55	19.3	109.2			
					60		

CONFORMED

GEOLABS, INC.

3151

BORING LOG B-1 (continued)

Drilling Date Jan. 18, 1972 Driving Wt. 300 lbs. Elevation 40 ft.

Job Milpitas, L.I.D. 71-4 Drop 18 inches Work Order 23-238-70

Sample	Depth ft	Blows/ft	Moisture Content %	Dry Unit Weight pcf	Depth ft	Graphic	USCS	Description
								Grading gravelly (continued)
63		20/40	16.9	109.1				
								Grading sandy
					65			
							CH	Clay, brown with green tint and rusty brown streaks, high plasticity, moist, hard
68		37/47	16.0	110.7				
					70			
							CH	Clay, blue-green, high plasticity, damp to moist, hard
73		23/35	11.3	110.0				
					75			
							CL	Sandy clay, light brown with tan streaks, moist, moderate plasticity, hard
79		29/50	16.6	108.0				
					80			Termination Depth: 80 feet

CONFORMED

GEOLABS, INC.

BORING LOG B-2

3151

Drilling Date Jan. 18, 1972 Driving Wt. 300 lbs. Elevation 46.5 ft.

Job Milpitas, I.J.D. 71-4 Drop 18 inches Work Order 23-238-70

Sample	Depth ft	Blows per ft	Moisture Content %	Dry Unit Weight pcf	Depth in feet	Graphic Log	Description
						GP GC	Clayey sand and gravel, light brown, coarse grained, medium dense
2		8/15/17 14.3					
						CH	Clay, dark brown with occasional light brown streaks, high plasticity, damp to moist, stiff
5		1/3/6 14.7			5	CL	Sandy clay, brown, low to moderate plasticity, damp, firm
8½		3/6/8 17.8				CH	Clay, dark brown to black with occasional yellow streaks, high plasticity, firm
					10	CL	Sandy clay, brown with tan streaks, moderate plasticity, moist, stiff
14		7/12/18 19.9			15	CH	Clay, brown with tan and occasional yellow streaks, high plasticity, moist, stiff
19		7/14/23 18.0			20	CL	Clay, light brown with dark brown and rusty brown streaks, high plasticity, moist, very stiff

CONFORMED

GEOLABS, INC.

3151

BORING LOG B-2 (continued)

Drilling Date Jan. 19, 1972 Driving Wt. 300 lbs. Elevation 46.5 ft.

Job Milpitas, I.I.D. 71-4 Drop 18 inches Work Order 23-238-70

Sample	Depth ft	Blows/ft	Moisture Content %	Dry Unit Weight pcf	Depth in feet	Graphic Log	Description
						CL	Clay, light brown with dark brown and rusty brown streaks, high plasticity, moist, very stiff (continued)
24		11/12/15	17.6	110.0	25		Occasional coarse sand to fine gravel
							Grading sandy
29		6/14/17	19.5	106.4	30	CH	Clay with occasional coarse sand, light brown with light tan and dark brown streaks, high plasticity, moist, stiff
						CL	Sandy clay, tan with rusty brown and light tan streaks, medium to high plasticity, damp to moist, hard
34		25/55	25.7	101.2	35		
39		7/19/30					Occasional coarse sand, very stiff
					40		

CONFORMED

GEOLABS, INC.

BORING LOG B-2 (continued)

3151

Drilling Date Jan. 19, 1972 Driving Wt. 300 lbs. Elevation 46.5 ft.

Job Milpitas, L.I.D. 71-4 Drop 18 inches Work Order 23-238-70

Sample	Depth ft	Blows per ft	Moisture Content %	Dry Unit Weight pcf	Depth in feet	Graphic Log	Description
							Occasional coarse sand, very stiff (continued)
44		13/51	17.7	108.6	45		Occasional gravel
49		11/13/17	21.2	105.3	50		
							Grading gravelly
54		11/24	13.7	114.5	55	CH	Clay, brown with occasional light tan streaks, high plasticity, moist, very stiff to hard
							Grading darker brown
59		11/35	19.2	105.6	60		

CONFORMED

GEOLABS, INC.

BORING LOG B-2 (continued)

3151

Drilling Date Jan. 19, 1972 Driving Wt. 300 lbs. Elevation 46.5 ft.

Job Milpitas, L.I.D. 71-4 Drop 18 inches Work Order 23-238-70

Sample	Depth ft	Blows/ft	Moisture Content %	Dry Unit Weight pcf	Depth ft	Graphic Log	USCS	Description
								Grading darker brown (continued)
64	14/29							Occasional fine gravel
					65			
69	19/32	22.5	102.7				CH	Clay with occasional fine gravel, brownish green with light tan and brown streaks, high plasticity, moist, very stiff to ha
					70			
74	12/40	20.2						
					75			
79	18/42	19.0	107.2					Grading silty
					80			
								Termination Depth: 80 feet

CONFORMED

GEOLABS, INC.

3151

BORING LOG 1-3

Drilling Date Jan. 19, 1972 Driving Wt. 300 lbs. Elevation 40.5 ft.

Job Milpitas I I D 71-4 Drop 18 inches Work Order 23-238-70

Sample	Depth ft	Blows/ft	Moisture Content %	Dry Unit Weight pcf	Depth in feet	Graphic	USCS	Description
							GP GC	Clayey, sandy gravel, brown, medium dense
2		6/13					CH	Clay with occasional gravel, dark brown, high plasticity, damp to moist, stiff
3½		8/14	18.5	102.5	5			
							CH	Clay, dark grey, high plasticity, moist, firm
9		5/7	22.0	95.1	10			
13		3/6	19.5	101.6			CH	Clay with occasional coarse sand, light brown with light tan streaks, high plasticity, moist, firm
					15			
18		5/6	15.8	106.5			CL	Sandy clay, brown with light brown streaks, moderate plasticity, moist, firm
					20			

CONFORMED

PLATE 5

GEOLABS, INC.

3151

BORING LOG B-3 (continued)

Drilling Date Jan. 19, 1972 Driving Wt. 300 lbs. Elevation 40.5 ft.

Job Milpitas I.I.D. 71-4 Drop 18 inches Work Order 23-238-70

Sample	Depth ft	Blows per ft	Moisture Content %	Dry Unit Weight pcf	Depth in Feet	Graphic Log	Description
						CL	Sandy clay, brown with light brown streaks, moderate plasticity, moist, firm (continued)
							Grading sandy
23		7/10	22.2	100.2		SC	Clayey sand, light brown, fine with occasional coarse sand, loose to medium dense
					25	CL	Clay with occasional coarse sand, light brown to tan with light tan and dark brown streaks low to moderate plasticity, moist to very moist, stiff
28		6/12	16.5	107.5			
					30		
33		15/16	17.0	107.6			
					35		
38		12/38				CL SC	Clayey sand, light brown, coarse grained, medium dense, with occasional fine gravel
					40		

CONFORMED

PLATE 5-A

GEOLABS, INC.

3151

BORING LOG B-3 (continued)

Drilling Date Jan. 19, 1972 Driving Wt. 300 lbs. Elevation 40.5 ft.

Job Milpitas, I.I.D. 71-1 Drop 18 inches Work Order 23-238-70

Sample	Depth ft	Blows/6 in ft	Moisture Content %	Dry Unit Weight lb/cu ft	Depth in	Graphic Log	Description
						CL	Sandy clay with occasional coarse sand, light brown, moderate plasticity, very stiff
43		12/25	17.7	109.0			
					45		
48		11/18	17.8	108.7			
					50		
						CH	Clay, brown with occasional tan streaks, high plasticity, moist, very stiff
53		13/20	22.2	104.0			
					55		
58		15/41	18.7	109.0			Grading to hard
					60		

CONFORMED

GEOLABS, INC.

3151

BORING LOG B-3 (continued)

Drilling Date Jan. 19, 1972 Driving Wt. 300 lbs. Elevation 40.5 ft.

Job Milpitas I.I.D. 71-4 Drop 18 inches Work Order 23-238-70

Sample	Depth ft	Blows Per ft	Moisture Content %	Dry Unit Weight pcf	Depth in Feet	Graphic Log	Description
							Grading to hard (continued)
63		15/30	20.8	104.2			
					65		
68		15/20	22.4	103.3			
					70		
73		18/24	11.6				
					75		
							Grading sandy to gravelly (fine)
						CL	Sandy clay with occasional coarse sand, tan, moderate plasticity, moist, hard
79		24/38	14.9	113.6			
					80		
							Termination Depth: 80 feet

CONFORMED

GEOLABS, INC.

3151

BORING LOG B-4

Drilling Date Jan. 20, 1972 Driving Wt. 300 lbs. Elevation 46.7 ft.

Job Milpitas, I.I.D. 71-4 Drop 18 inches Work Order 23-238-70

Sample	Depth ft	Blows/ft	Moisture Content %	Dry Unit Weight pcf	Depth ft	Graphic Log	USCS	Description
							GC GP	Clayey, sandy gravel, brown, coarse, medium dense
2		7/11	30.4				CH	Clay with occasional coarse sand, dark brown to black, high plasticity, damp to moist, stiff
								Grading lighter brown
5		10/12	8.4	116.3	5		GC GP	Clayey, sandy gravel, tan with some yellow streaks, coarse, medium dense
9		7/9	16.7	107.3	10		CL	Gravelly to sandy clay, grey with occasional yellowish brown streaks, moderate plasticity, moist, stiff
								Grading brown
14		7/11	22.4	99.2	15		CH	Clay, greyish brown with light tan and dark brown streaks and occasional yellow streaks, high plasticity, moist, very stiff
19		9/11	19.2	105.5	20		CL	Sandy clay, tan with light tan, dark brown and rusty brown streaks, moderate plasticity, moist, stiff

CONFORMED

GEOLABS, INC.

3151

BORING LOG B-4 (continued)

Drilling Date Jan. 20, 1972 Driving Wt. 300 lbs. Elevation 46.7 ft.

Job Milpitas, I.I.D. 71-4 Drop 18 inches Work Order 23-2718-70

Sample Depth ft	Blows per ft	Moisture Content %	Dry Unit Weight pcf	Depth in feet	Graphic Log	Description
					CL	Sandy clay, tan with light tan, dark brown and rusty brown streaks, moderate plasticity, moist, stiff (continued)
24	22/31	16.2	116.1	25	GC SC	Clayey gravel to clayey sand, light brown, coarse to fine gravel, coarse sand, dense
29	8/14	21.0	103.2	30	CH	Clay with occasional coarse sand, tan with light tan and occasional dark brown and rusty brown streaks, high plasticity, moist, stiff
34	10/18	22.4	103.5		CL	Sandy clay, tan with rusty brown, light tan and brown streaks, moderate plasticity, damp to moist, stiff
				35	SC	Clayey sand, brown, coarse, medium dense
					CL	Sandy clay, light brown with light tan streaks, moderate plasticity, moist, very stiff
39	18/18	18.5	107.0	40		

CONFORMED

GEOLABS, INC.

3151

BORING LOG B-4 (continued)

Drilling Date Jan. 20,1972 Driving Wt. 300 lbs. Elevation 46.7 ft.

Job Milpitas, I.I.D. 71-4 Drop 18 inches Work Order 21-238-70

Sample	Depth ft	Blows ft	Atterberg	Content %	Dry Unit Weight pcf	Depth m	Graphic Log	Description
							CL	Sandy clay, light brown with light tan streaks, moderate plasticity, moist, very stiff (continued)
44		18/35	14.7	112.0		45	SC	Clayey sand, light brown, varies from coarse to fine, dense to very dense
49		11/18	20.2	103.9		50	CL	Sandy clay with occasional coarse sand, light brown with light tan and occasional rusty brown streaks, moderate plasticity, moist, very stiff
54		21/32	16.1	112.5		55	CH	Clay, brown with occasional light tan and rusty brown streaks, high plasticity, moist, hard
59		17/37	16.5	109.4		60		

CONFORMED

GEOLABS, INC.

3151

BORING LOG B-4 (continued)

Drilling Date Jan. 20, 1972 Driving Wt. 300 lbs. Elevation 46.7 ft.

Job Milpitas, I.I.D. 71-4 Drop 18 inches Work Order 23-238-70

Sample	Depth ft	Blows/6 in	Moisture Content %	Dry Unit Weight pcf	Depth ft	Graphic Log	Description
						CH	Light brown with light tan and blue-green streaks
							Grading blue-green
64	27/36		22.7	105.0	65		
69	22/24		19.7	108.1	70		
74	26/39		19.0	109.9	75		
79	16/28		17.8	106.8	80		Occasional coarse sand

CONFORMED

GEOLABS, INC.

3151

BORING LOG B-4 (continued)

Drilling Date Jan. 20, 1972 Driving Wt. 300 lbs. Elevation 46.7 ft.

Job Milpitas, L.I.D. 71-4 Drop 18 inches Work Order 23-238-70

Sample Depth ft	Blows/6 in.	Moisture Content %	Dry Unit Weight pcf	Depth in feet	Graphic Log	Description
						Occasional coarse sand (continued)
					SC GC	Clayey sand to gravel, light brown, coarse sand to fine gravel, very dense
84	50/60 for 4"	11.8	114.6			
				85		
						Termination Depth: 85 feet

CONFORMED

GEOLABS, INC.

3151

Date March 1, 1972

Job Bissell & Karn

W.O. 23-238-70

SHEAR TEST DIAGRAM

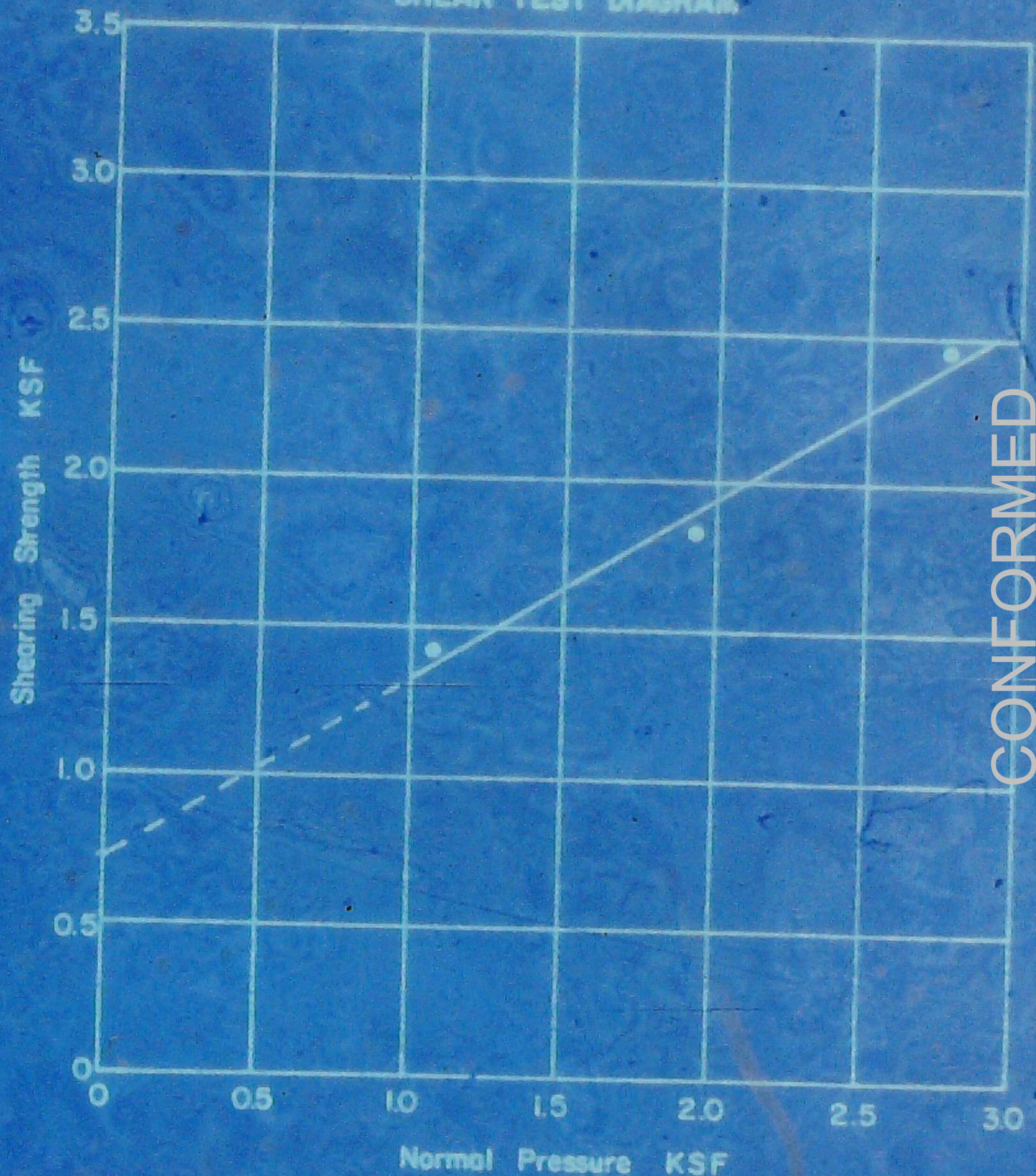

B-3 @ 43'
c = 0.7 KSF
ø = 32°

Key:

○ Tests at field moisture content.

● Tests at saturated moisture content.

PLATE 7

CONFORMED

3151

GEOLABS, INC.

Date March 1, 1972

Job Bissell & Karn

W.O. 23-238-70

SHEAR TEST DIAGRAM

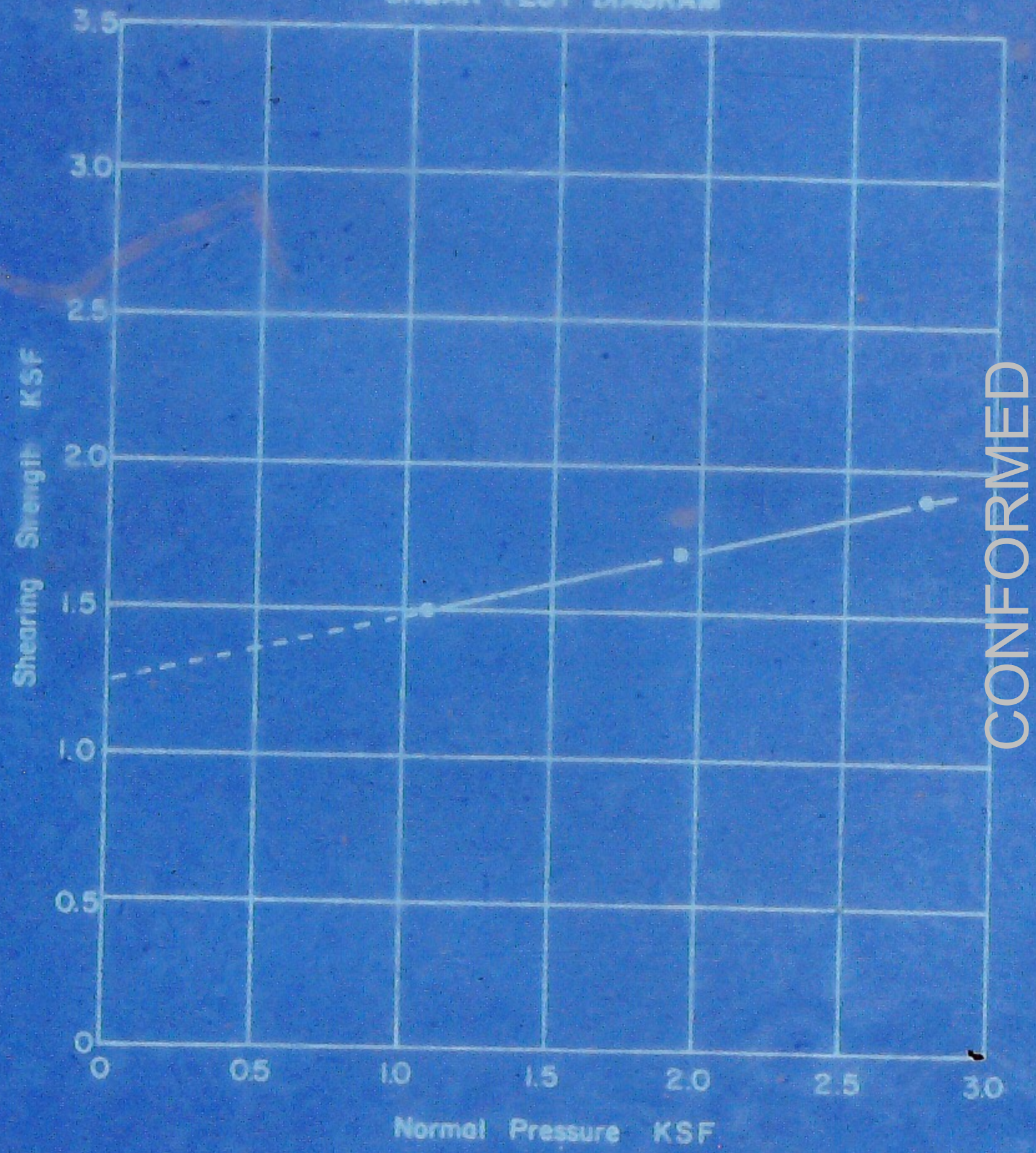

B-3 @ 53'
c = 1.25 KSF
ø = 13°

Key:

○ Tests at field moisture content.

● Tests at saturated moisture content.

CONFORMED

PLATE 8

GEOLABS, INC.

! 3151

Date March 1, 1972

Job Bissell & Kern

W.O. 23-238-70

SHEAR TEST DIAGRAM

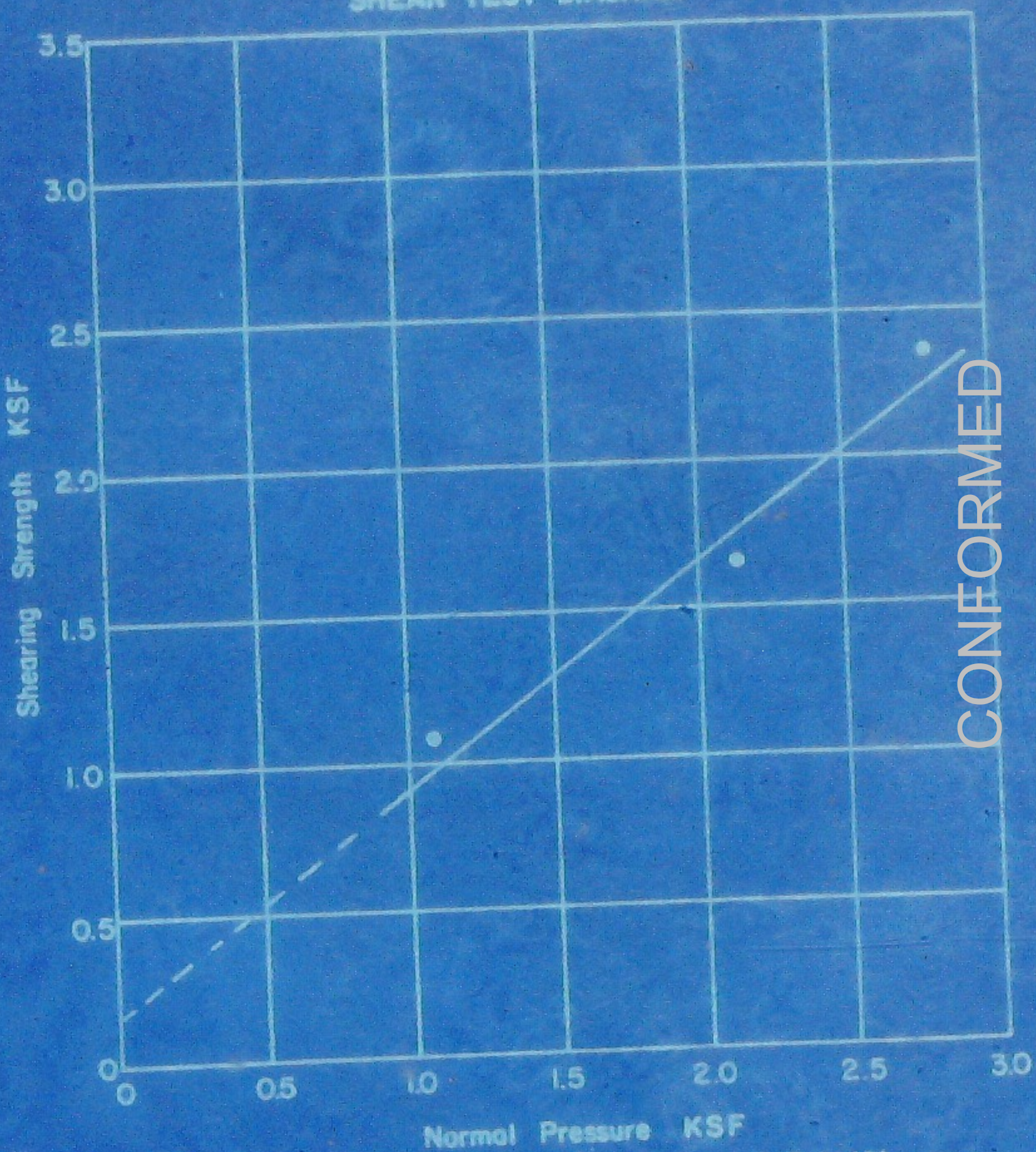

B-3 @ 63'
c = 0.15 KSF
ϕ = 37°

Key:

○ Tests at field moisture content.

● Tests at saturated moisture content.

PLATE 9

CONFORMED

GEOLABS, INC.

3151

Date March 1, 1972

Job Bissell & Karn

W.O. 23-238-70

SHEAR TEST DIAGRAM

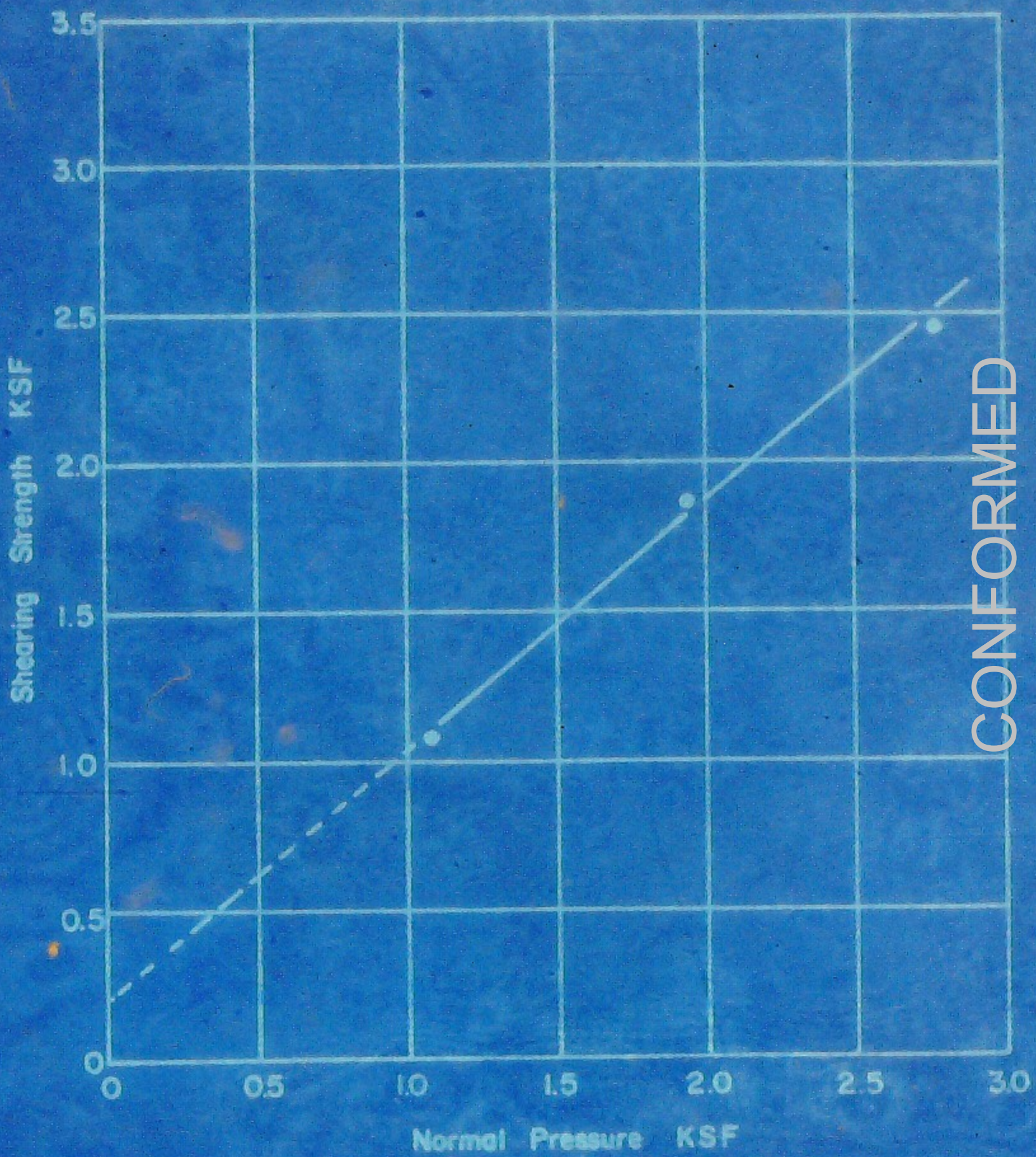

B-4 @ 44'
c = 0.2 KSF
ø = 40°

Key:

○ Tests at field moisture content.

● Tests at saturated moisture content.

CONFORMED

GEOLABS, INC.

3151

Date March 1, 1972

Job Bissell & Karn

W.O. 23-238-70

SHEAR TEST DIAGRAM

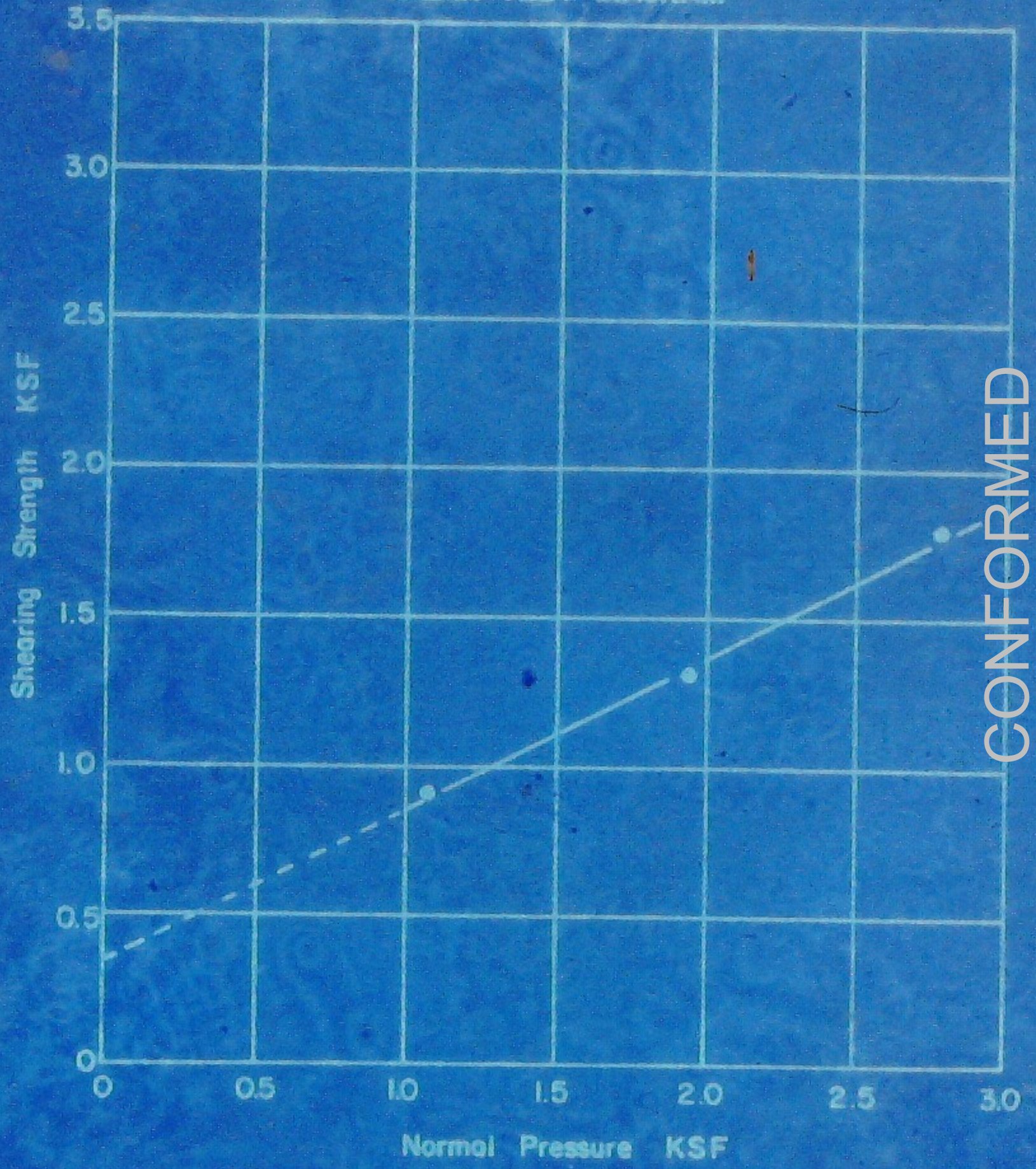

B-4 @ 49'
c = 0.35 KSF
ϕ = 27°

Key:

○ Tests at field moisture content.

● Tests at saturated moisture content.

CONFORMED

PLATE 11

GEOLABS, INC.

3151

Date March 1, 1972

Job Bissell & Karn

W.O. 23-238-70 Q

SHEAR TEST DIAGRAM

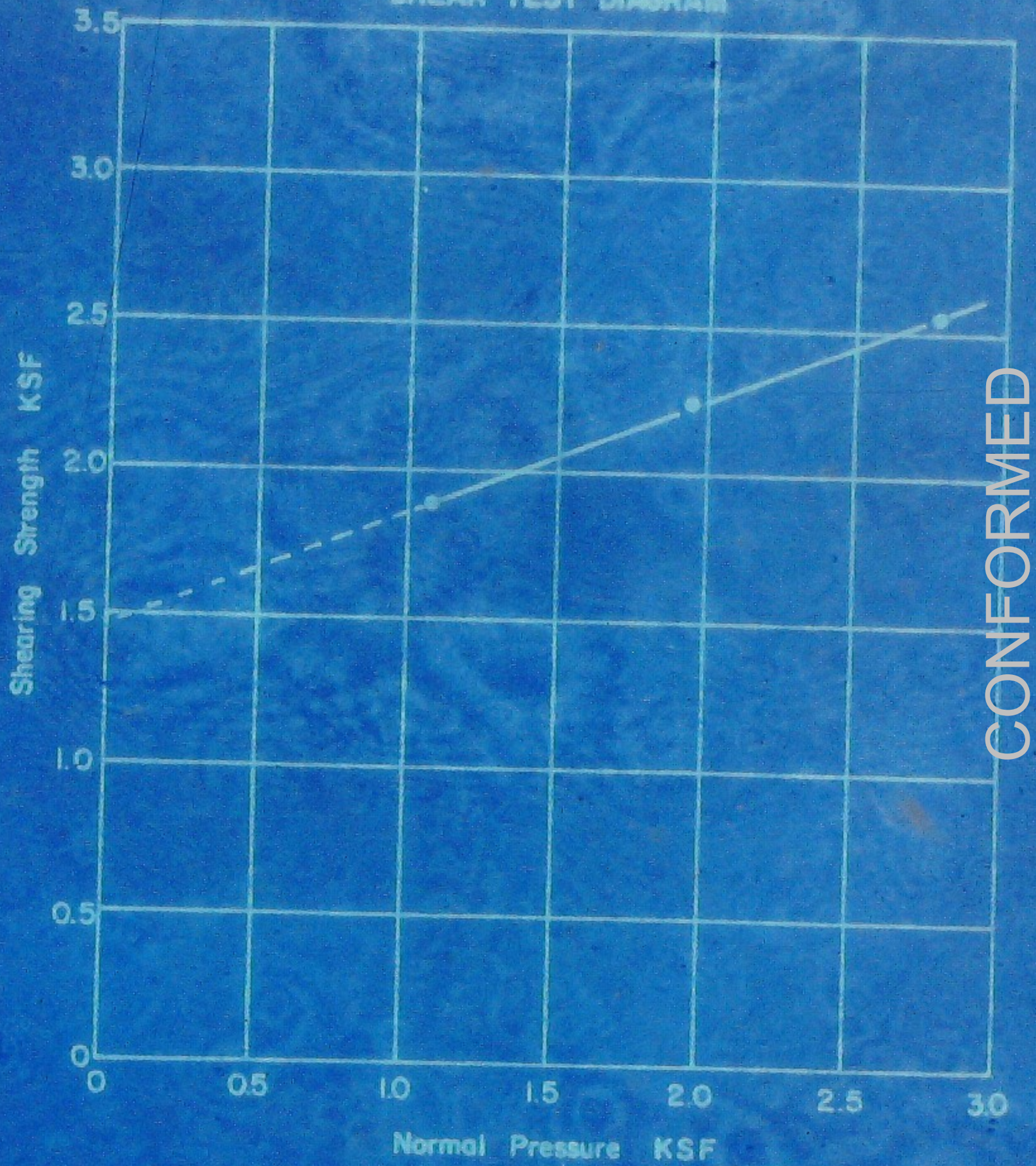

B-4 @ 54'
c = 1.45 KSF
ø = 21.5°

Key:

○ Tests at field moisture content.

● Tests at saturated moisture content.

CONFORMED

PLATE 12

GEOLABS, INC. 3151

Date March 1, 1972

Job Bissell & Karn W.O. 23-238-70

SHEAR TEST DIAGRAM

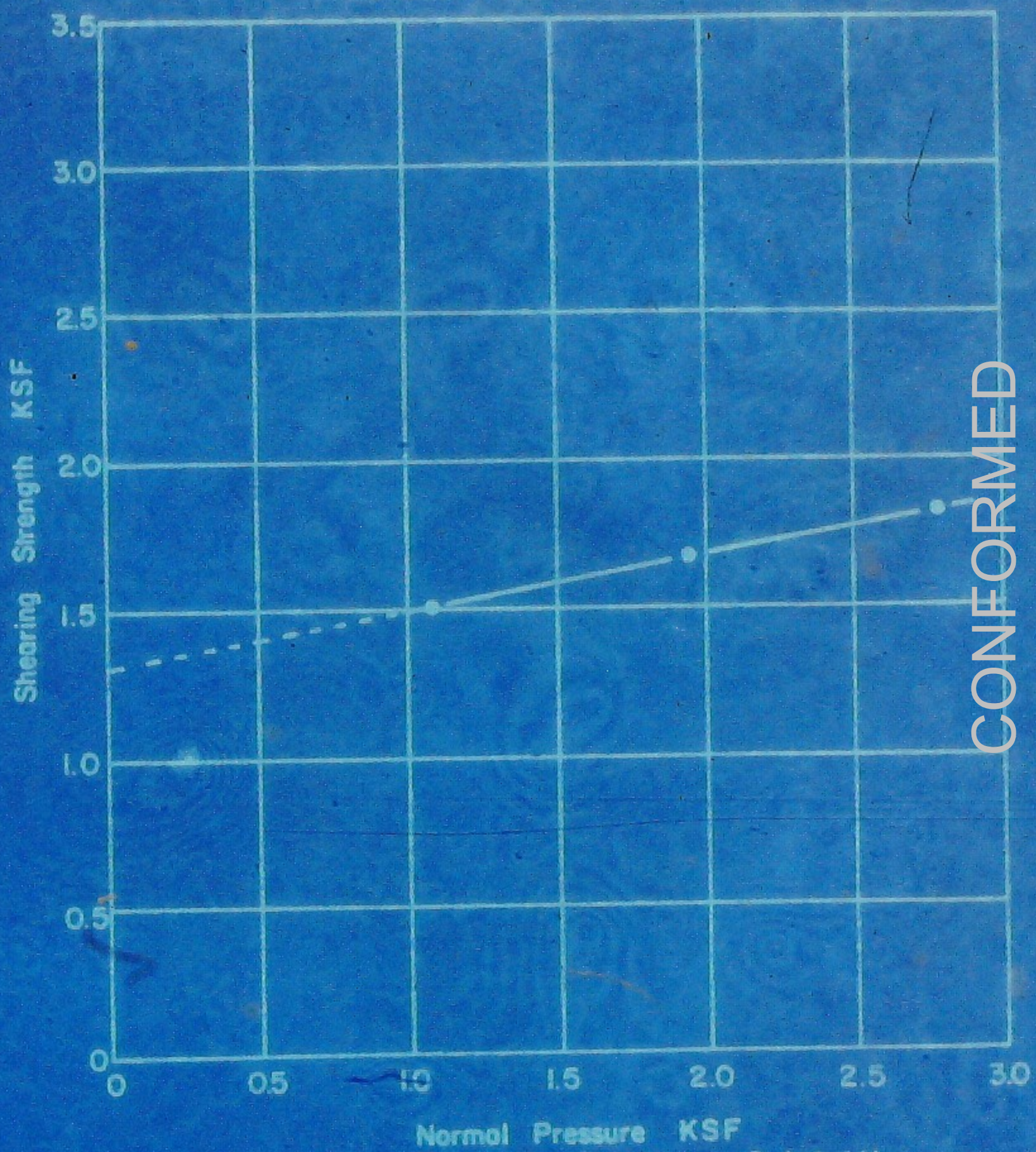

B-4 @ 64'
c = 1.3 KSF
ø = 10°

Key:

○ Tests at field moisture content.

● Tests at saturated moisture content.

CONFORMED

GEOLABS, INC.

3151

Date March 1, 1972

Job Bissell & Karn W.O. 23-238-70

SHEAR TEST DIAGRAM

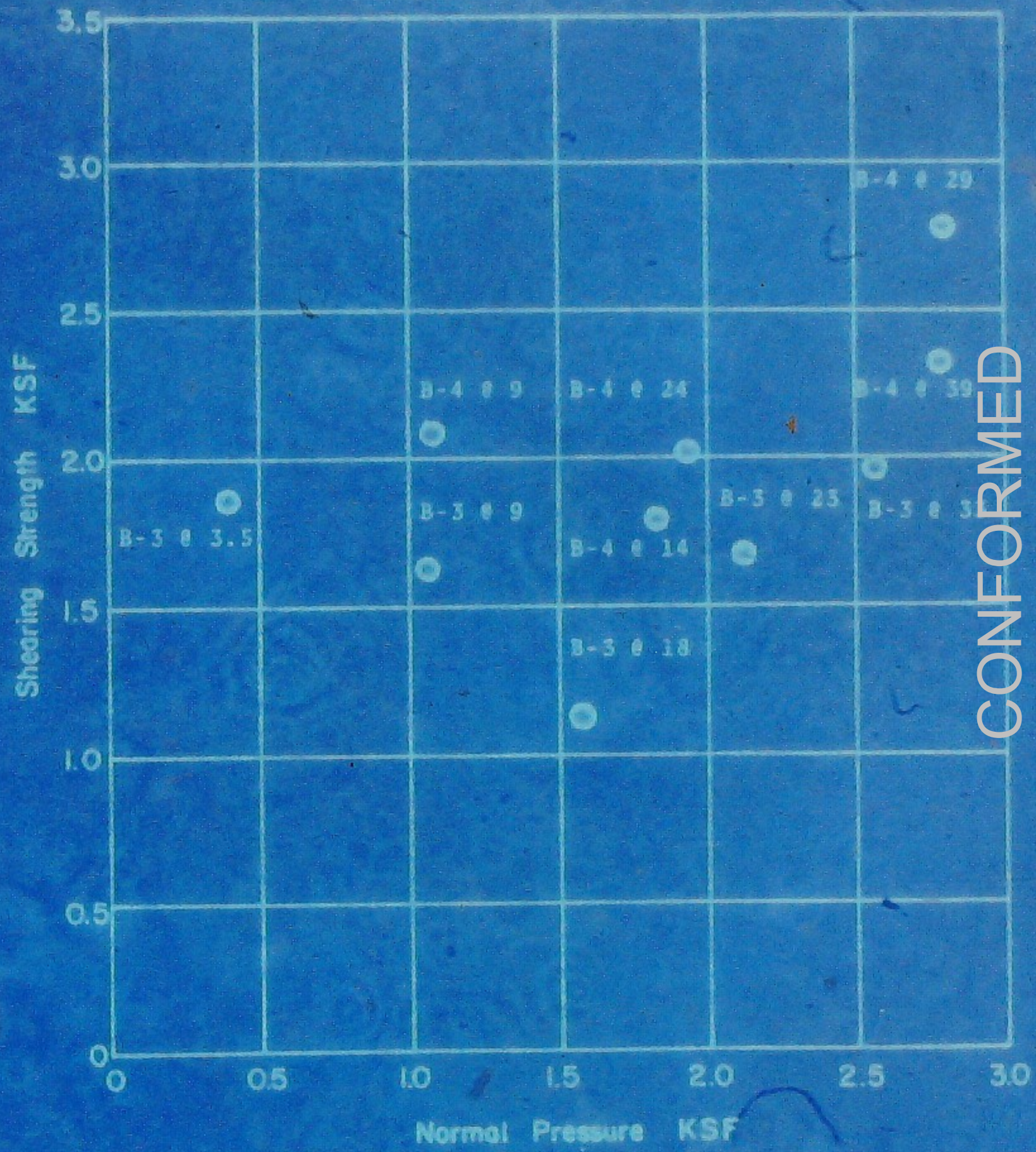

Key:

○ Tests at field moisture content.

● Tests at saturated moisture content.

CONFORMED

3151

GEOLABS INC.

DATE March 1, 1972

JOB Bissell & Karn

W.O. 23-238-70

BORING NO. 3

DEPTH 68 ft.

CONSOLIDATION - PRESSURE CURVE

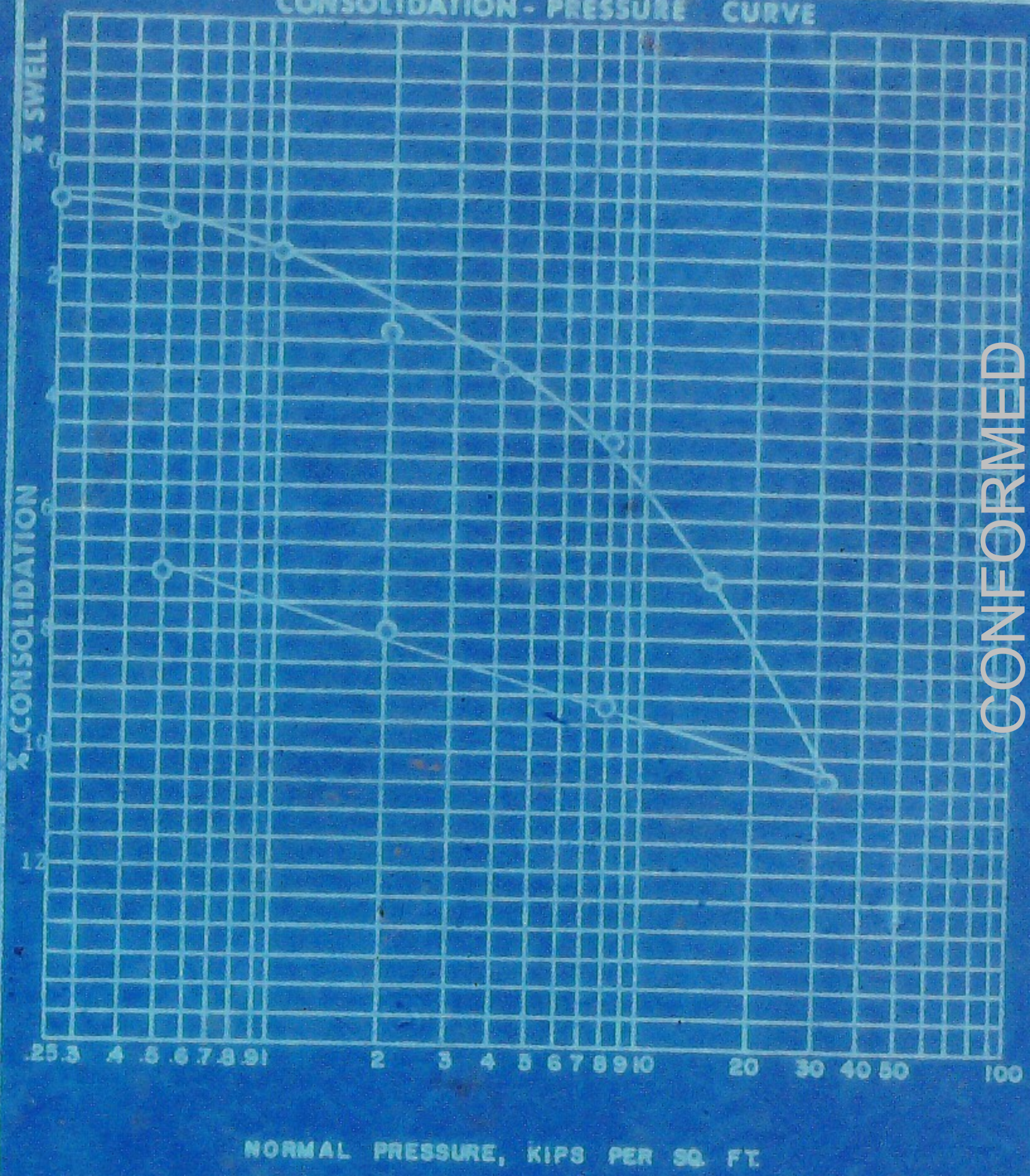

CONFORMED

PLATE 15

3151

GEOLABS INC.

DATE March 1, 1972

JOB Bianchi & Kern

W.O. 23-238-70

BORING NO. 4

DEPTH 69 ft.

CONSOLIDATION - PRESSURE CURVE

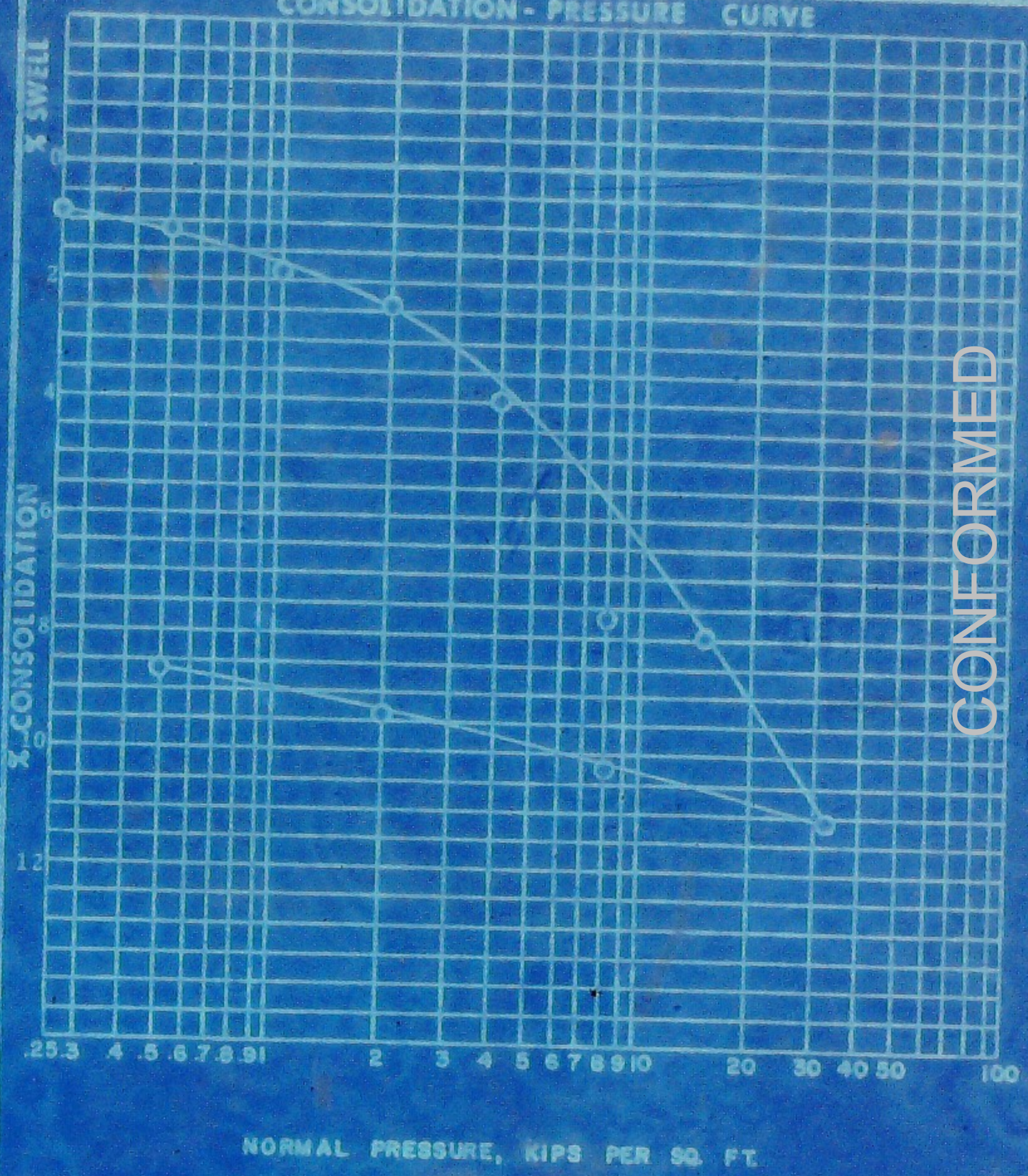

CONFORMED

PLATE 16

PLASTICITY CHART

3151

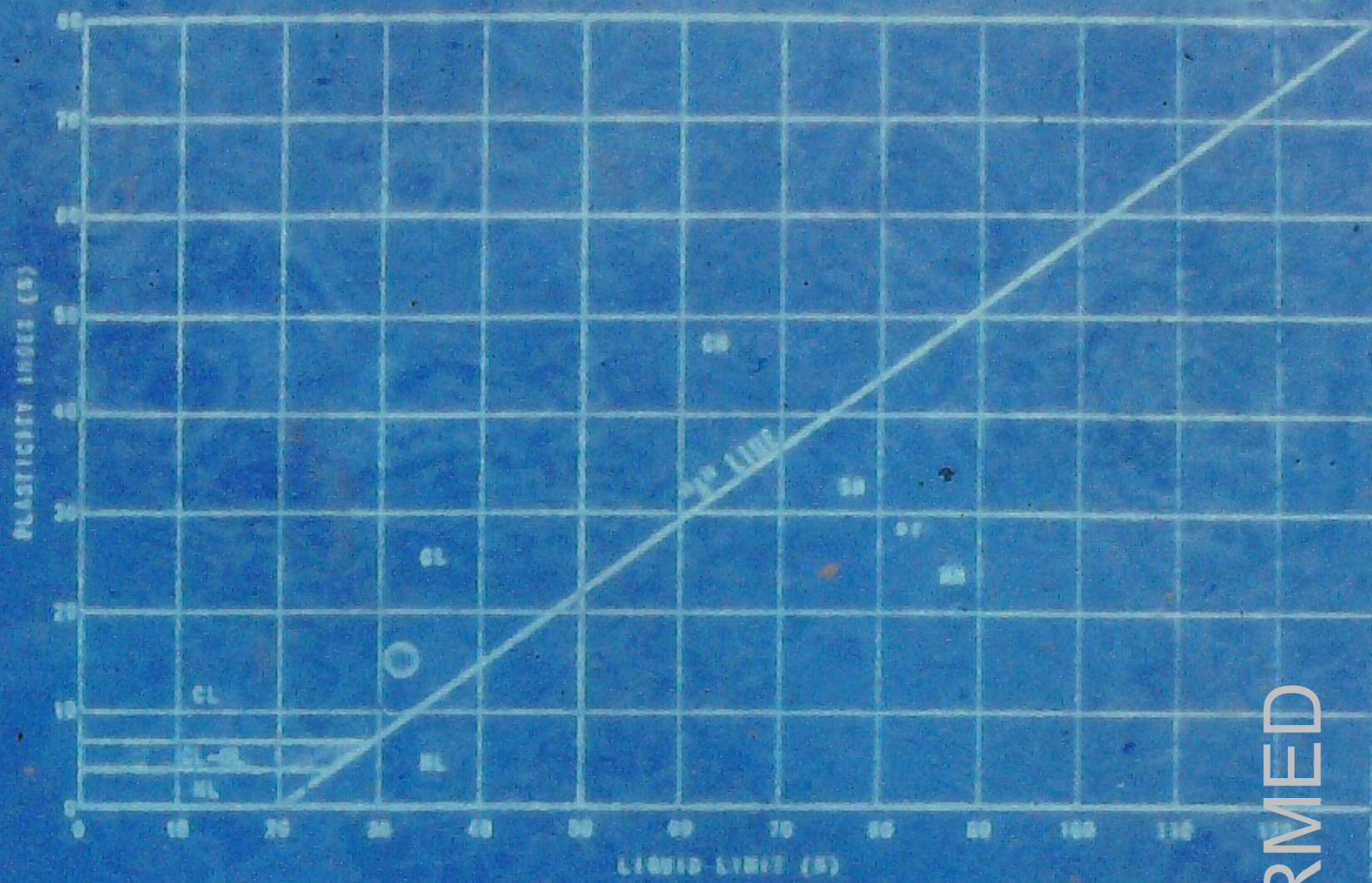

PLASTICITY DATA

KEY SYMBOL	HOLE NUMBER	DEPTH (feet)	NATURAL WATER CONTENT W (%)	PLASTIC LIMIT (%)	LIQUID LIMIT (%)	PLASTICITY INDEX (%)	LIQUIDITY INDEX $\left(\frac{W-P}{L-P}\right)$	UNIFIED SOIL CLASSIFICATION SYMBOL
●	B-4	59'		17.4	32.7	15.3		CL

GEOLABS, INC.
GEOLOGY AND SOIL ENGINEERING

DATE 3-7-77 BY RTG
SCALE ——— NO. 23-238-70

PLATE

CONFORMED

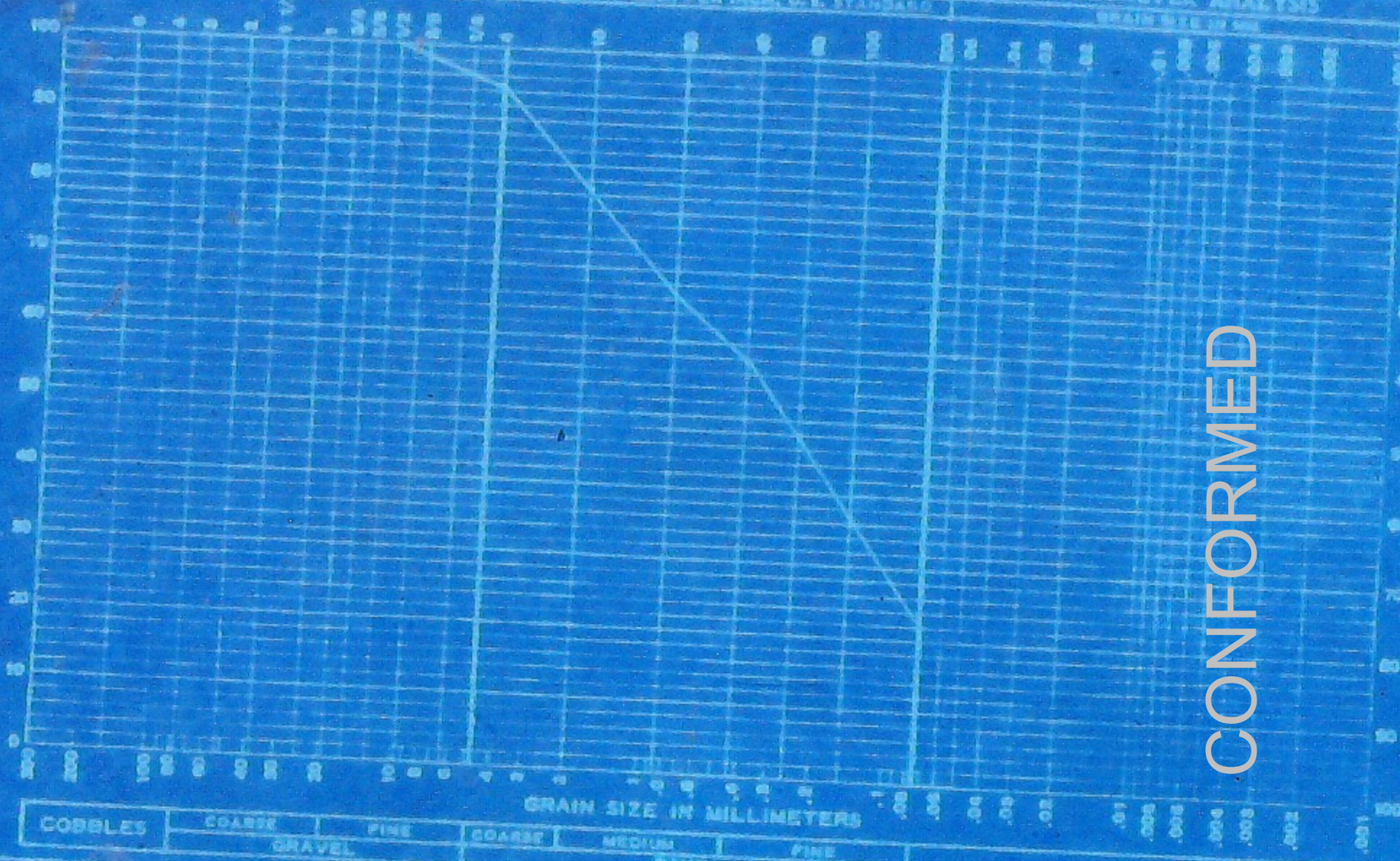

SAMPLE NO.	DEPTH -FT.	U.S.C.	CLASSIFICATION	NAT. W.C. %	LL	PL	PI
B-1	38	CL					

GRAIN SIZE CLASSIFICATION

GEOLABS-CALIFORNIA, INC.

3151

CONFORMED

PLATE 18

Job No. 15-138-70
File No. T6128-11
Lab. No. 11770
February 22, 1972

3151

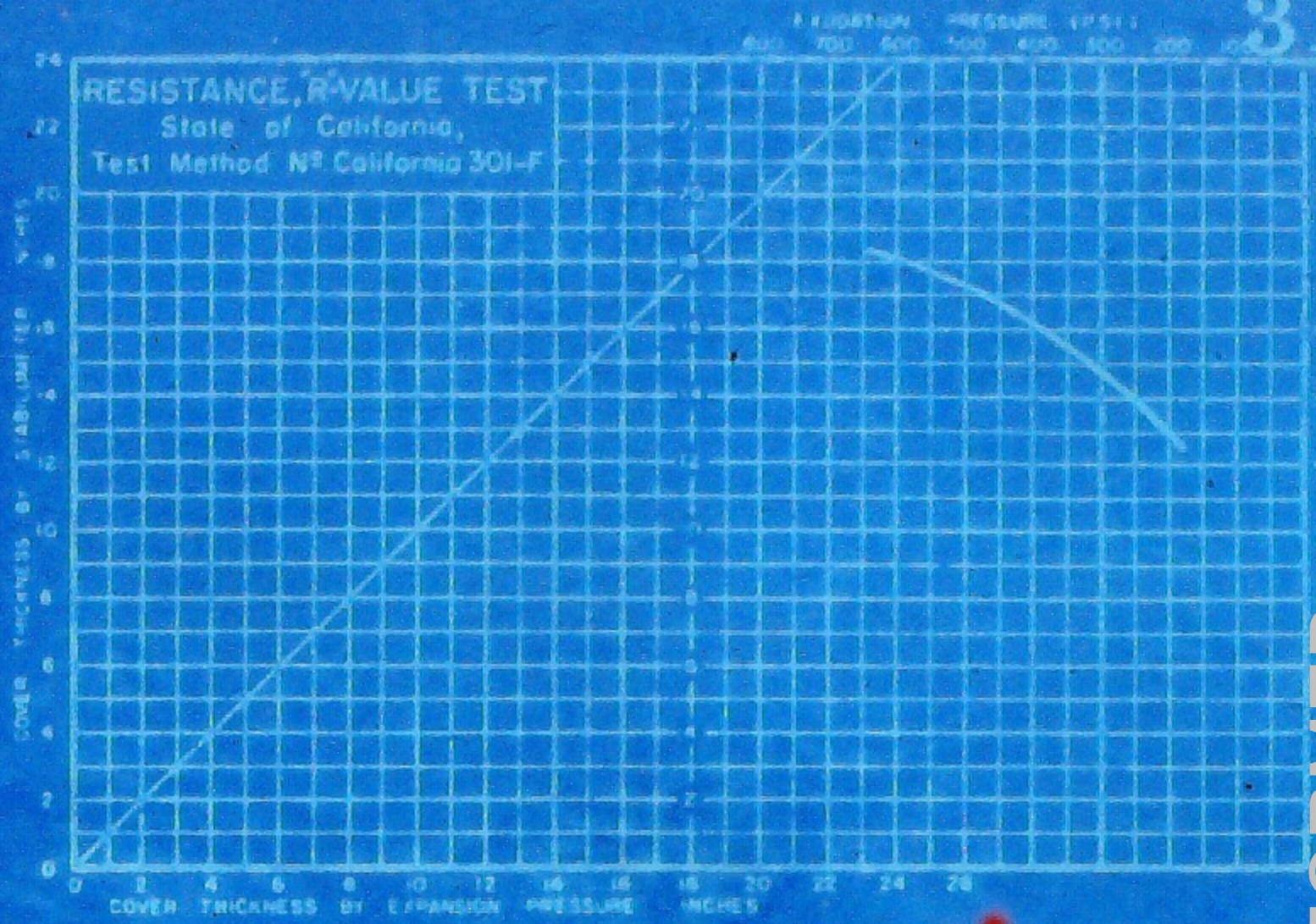

Sample: Pt I @ 0' to 2'

Description: Lt. Brwn. Sandy Silt

Specimen	A	B	C
Exudation Pressure, p.s.i.	223	350	597
Expansion dial (.0001")	13	20	28
Expansion Pressure, p.s.f.	56	87	121
Resistance Value, "R"	48	57	70
% Moisture at Test	11.3	10.9	10.4
Dry Density at Test, p.c.f.	120.9	122.2	123.2
"R" Value at 300 p.s.i. Exudation Pressure	= (54)		

CONFORMED

Lab. No. 11706
February 4, 1972
Job No. 23-238-70

3151

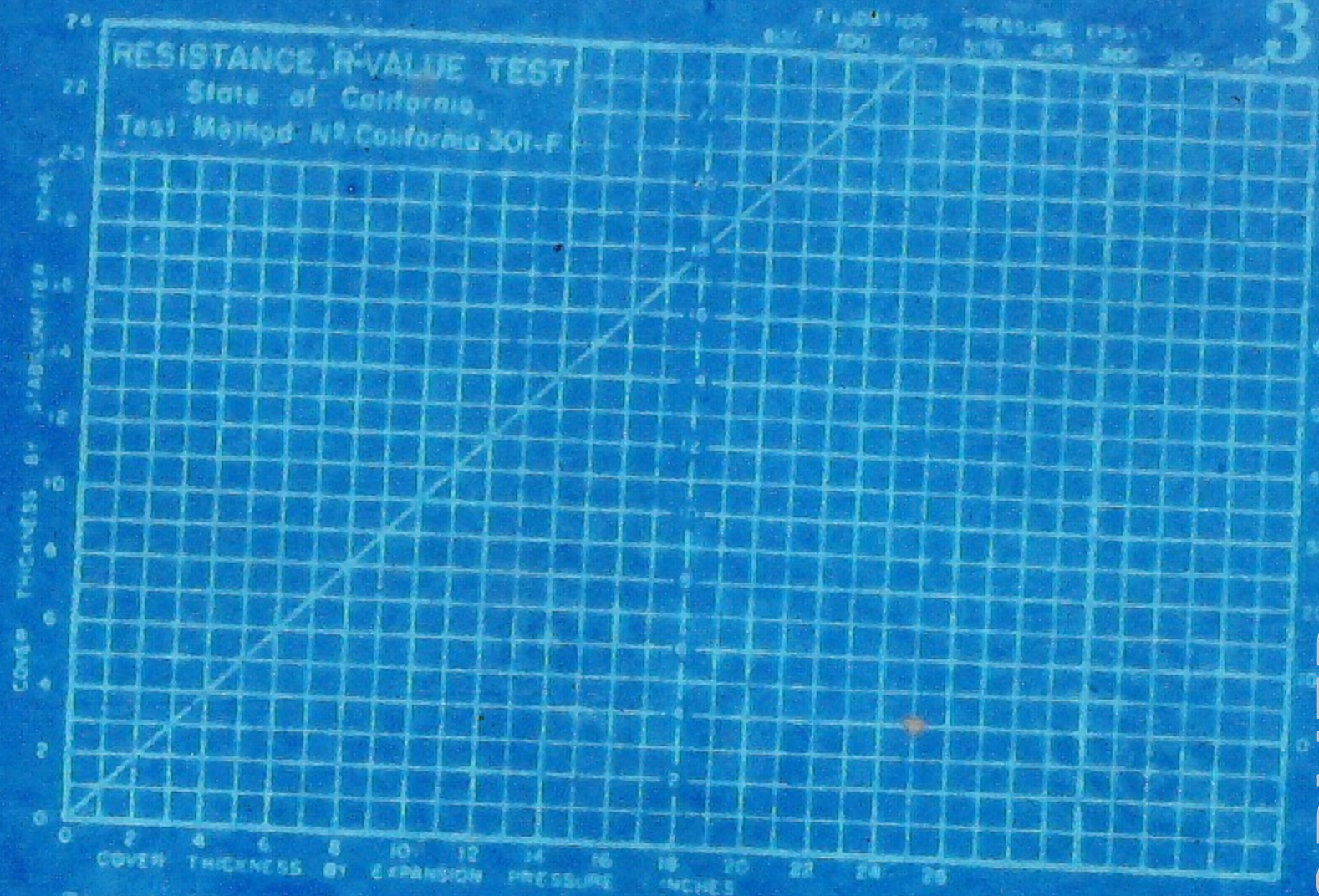

Sample: Pt. II at 2.5' to 3.0'

Description: Dark brown clay.

Specimen	A	B	C
Exudation Pressure,p.s.i.			
Expansion dial (.0001")			
Expansion Pressure,p.s.f.			
Resistance Value, "R"			
% Moisture at Test			
Dry Density at Test,p.c.f.			
"R" Value at 300 p.s.i. Exudation Pressure	= (*) Less than 5.		

*Sample extruded from beneath mold at 621 p.s.i. with one light lit.

CONFORMED

Job No. 73-238-78
File No. 73328-41
Lab. No. 11779
February 22, 1972

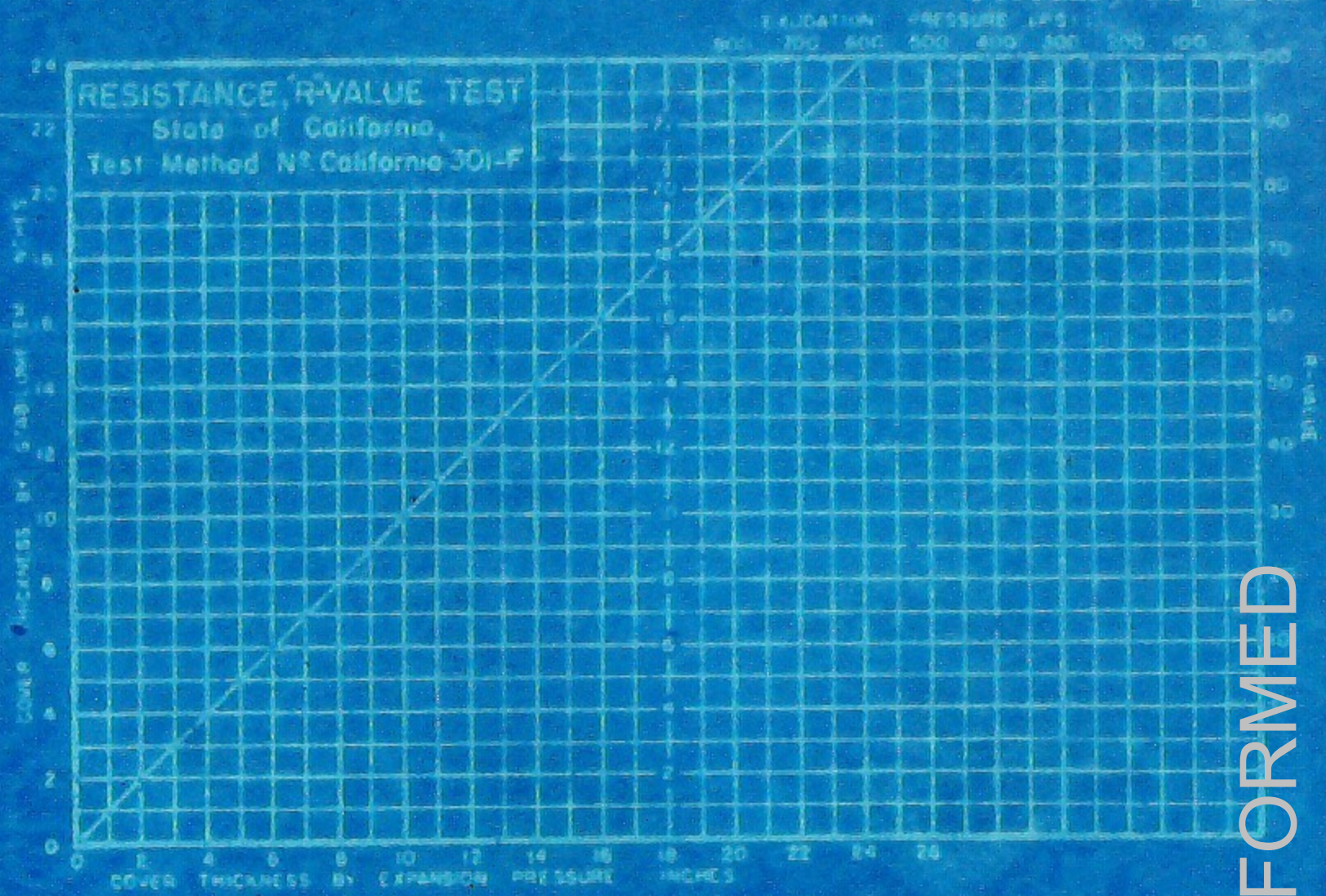

Sample: Pt IV @ 3' to 4'

Description: Tan mottled silty-clay

Specimen	A	B	C
Exudation Pressure, p.s.i			
Expansion dial (.0001")			
Expansion Pressure, p.s.f.			
Resistance Value, "R"			
% Moisture at Test			
Dry Density at Test, p.c.f.			
"R" Value at 300 p.s.i. Exudation Pressure	= (*) less than 5		

*NOTE: Sample extruded from mold @ 7,000 lb. load with no lights

CONFORMED

File No. 68328-H
Lab. No. 11706
February 4, 1972
Job No. 23-238-70

3151

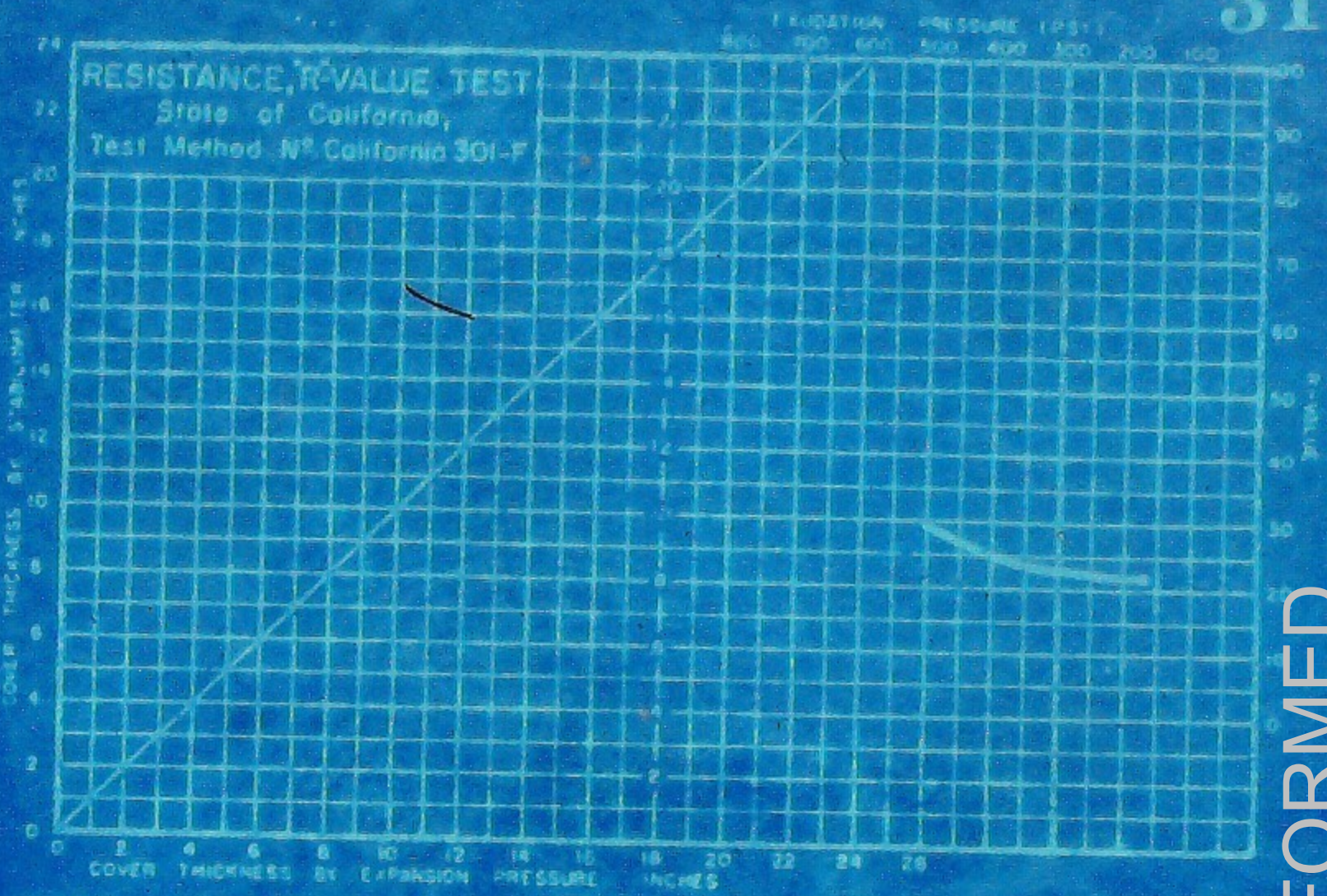

Sample: Pt. VI at 3' to 4'

Description: Tan silty clay.

Specimen	A	B	C
Exudation Pressure p.s.i.	255	350	470
Expansion dial (.0001")	35	40	50
Expansion Pressure p.s.f.	151	173	216
Resistance Value, "R"	22	24	28
% Moisture at Test	21.9	21.0	20.1
Dry Density at Test p.c.f.	104.0	104.8	106.3
"R" Value at 300 p.s.i. Exudation Pressure	= (23)		

CONFORMED

Lab. No. 11708
February 4, 1972
Job No. 23-238-70

3151

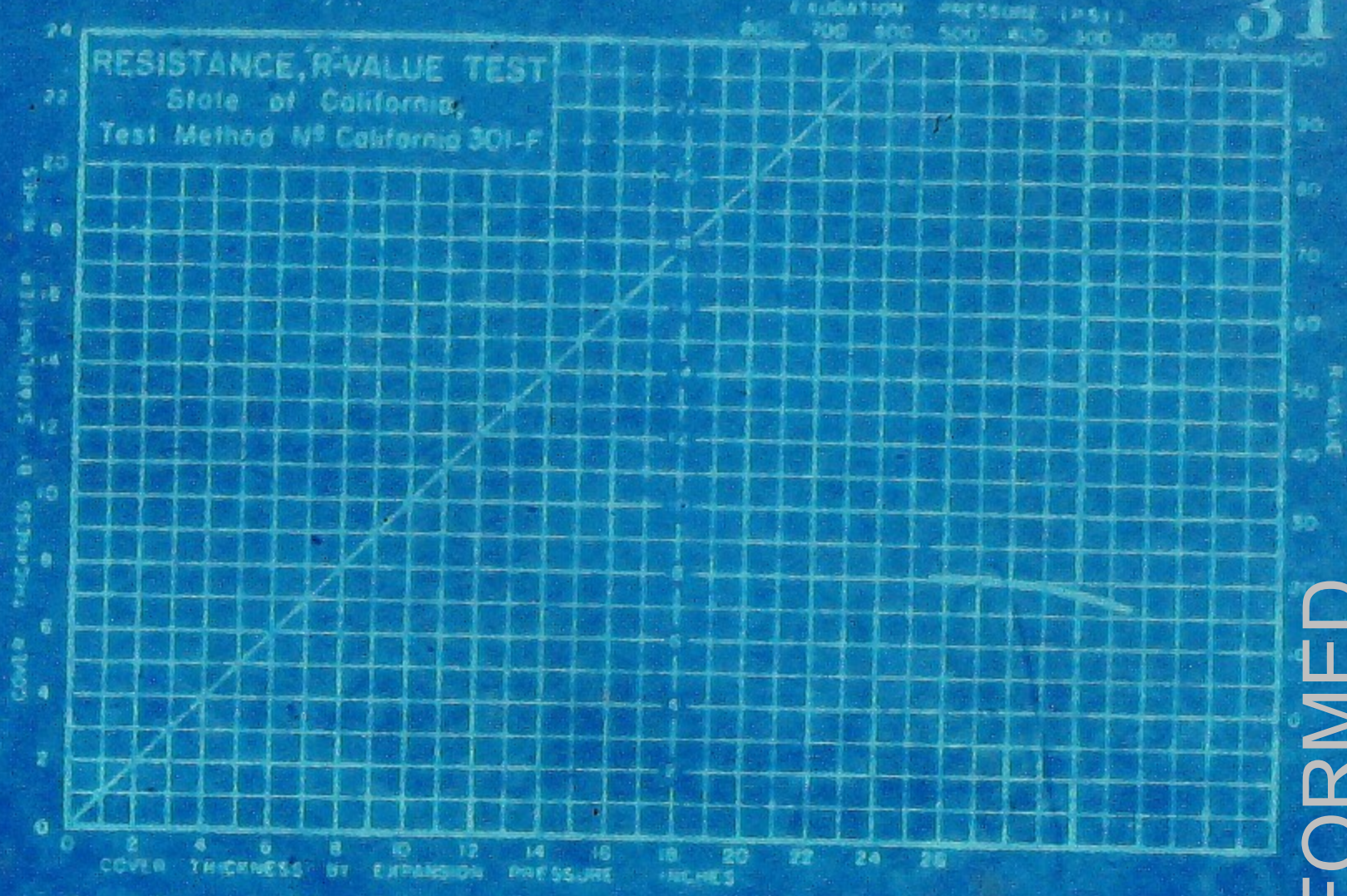

Sample: Pt. VIII at 3' to 4'

Description: Tan silty clay.

Specimen	A	B	C
Exudation Pressure, p.s.i.	271	310	462
Expansion dial (.0001")	0	10	15
Expansion Pressure, p.s.f.	0	43	66
Resistance Value, "R"	18	19	20
% Moisture at Test	20.2	19.4	18.5
Dry Density at Test, p.c.f.	102.5	105.7	107.0
"R" Value at 300 p.s.i. Exudation Pressure	= (19)		

CONFORMED

File No. 14,248-M1
Lab. No. 11708
February 4, 1972
Job No. 23-238-70

3151

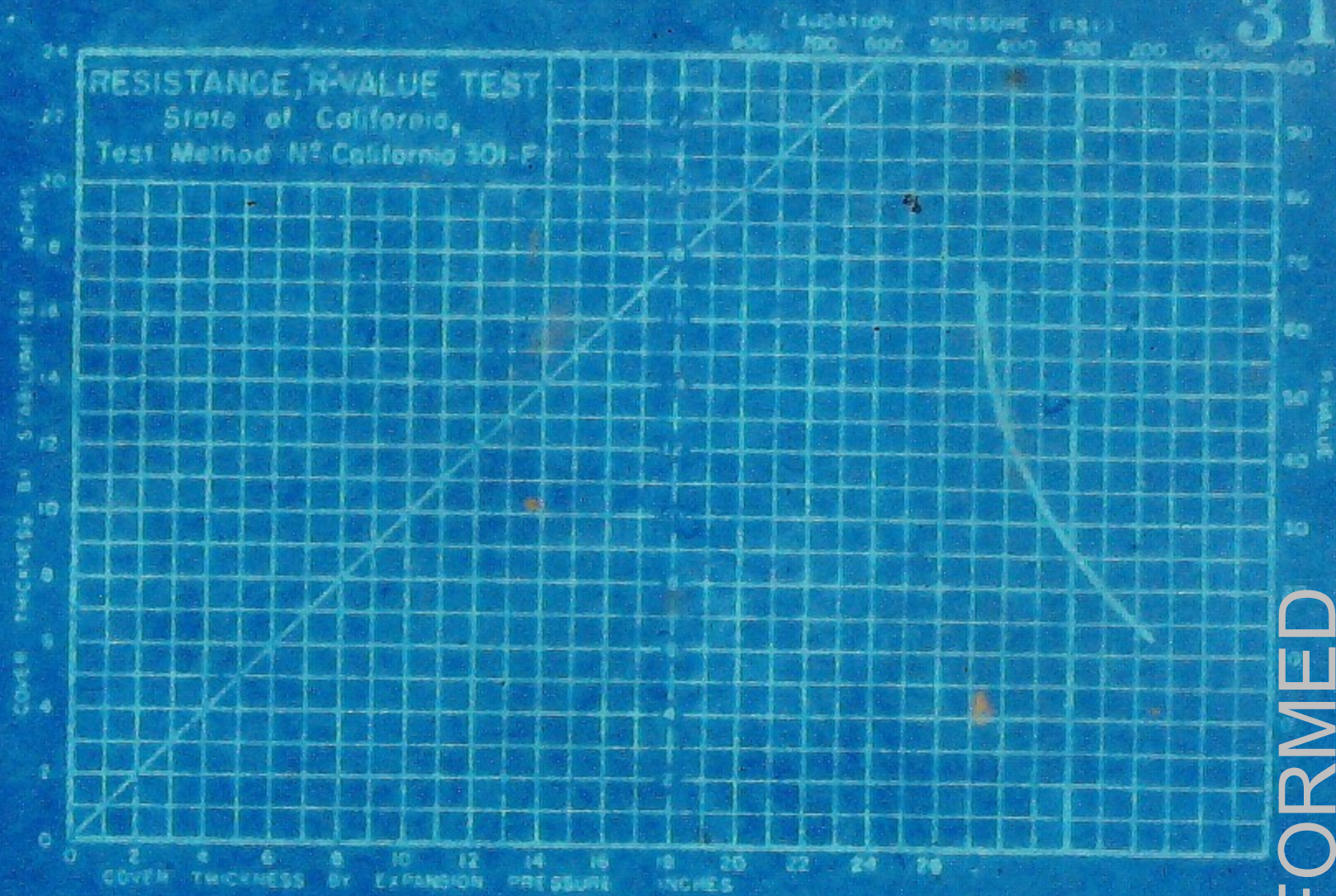

Sample: FT X at 3.0' to 3.5'

Description: Tan silty clay.

Specimen	A	B	C
Exudation Pressure,p.s.i.	199	358	446
Expansion dial (.0001")	0	10	30
Expansion Pressure,p.s.f.	0	43	130
Resistance Value, "R"	14	36	59
% Moisture at Test	17.7	15.5	14.2
Dry Density at Test,p.c.f.	109.3	112.2	116.0
"R" Value at 300 p.s.i. Exudation Pressure	= (27)		

CONFORMED

File No. [illegible]
Lab. No. 11708
February 4, 1972
Job No. 23-238-70

3151

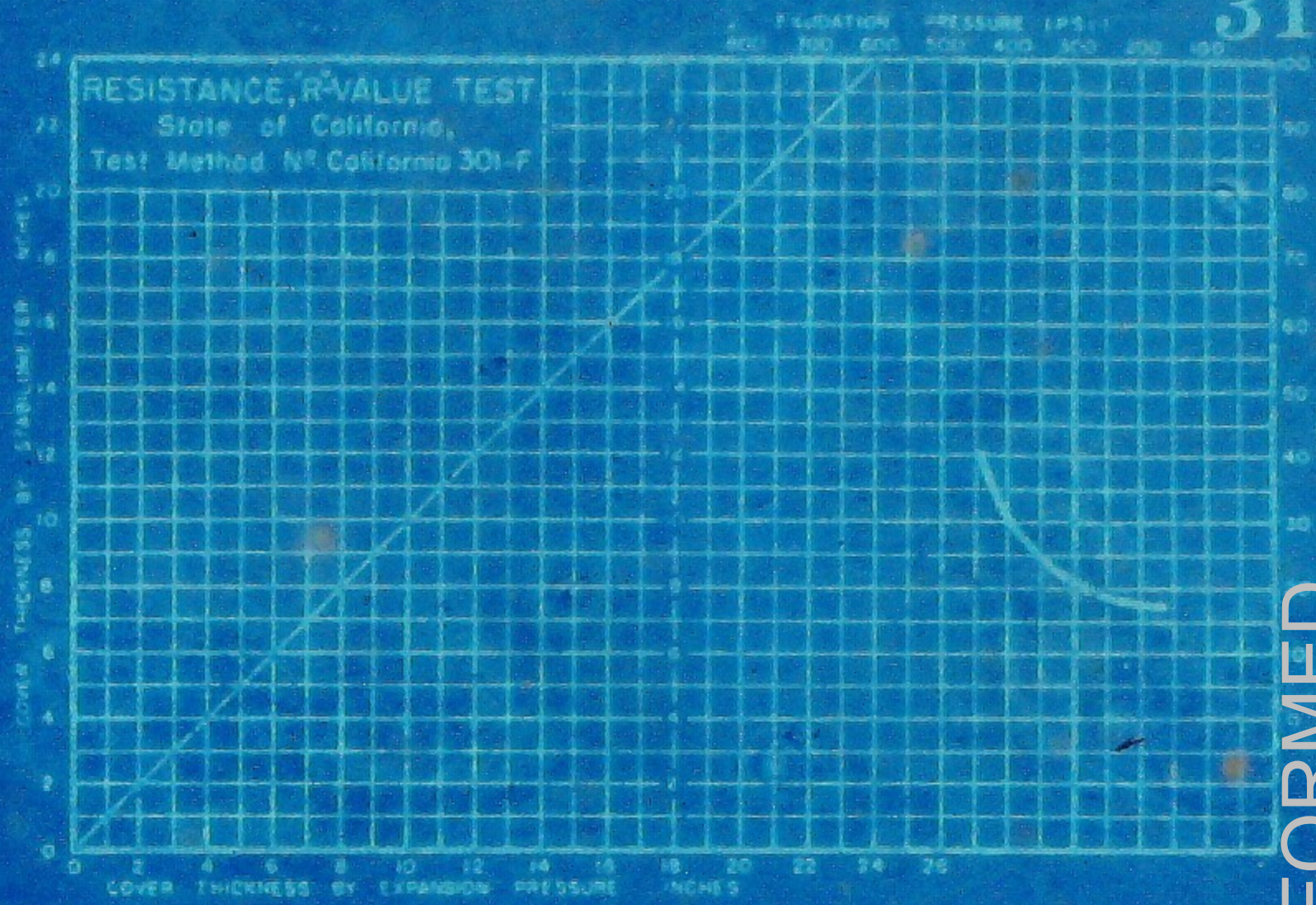

Sample: Pt. XII at 3.0' to 3.5'

Description: Brown silty clay with some gravel.

Specimen	A	B	C
Exudation Pressure p.s.i.	191	302	438
Expansion dial (.0001")	0	3	7
Expansion Pressure p.s.i.	0	13	30
Resistance Value, "R"	18	21	37
% Moisture at Test	15.9	15.1	14.2
Dry Density at Test p.c.f.	113.0	113.2	116.9
"R" Value at 300 p.s.i. Exudation Pressure	= (21)		

CONFORMED

File No. 78328-ML
Lab. No. 11706
February 4, 1972
Job No. 23-233-70

3151

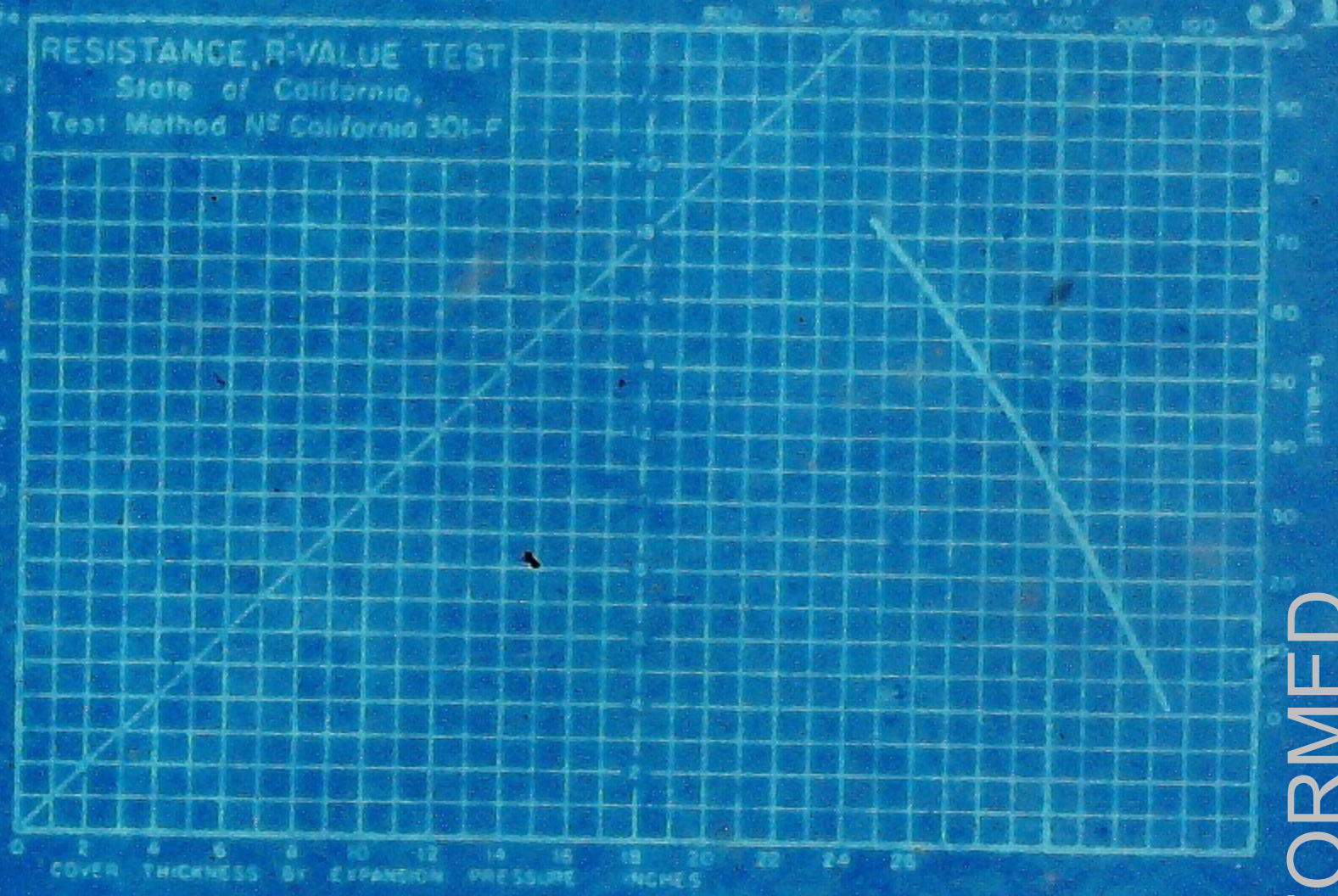

Sample: Pt. XIII at 3.0' to 5.0'

Description: Tan silty clay with some gravel.

Specimen	A	B	C
Exudation Pressure, p.s.i.	159	319	542
Expansion dial (.0001")	0	4	10
Expansion Pressure, p.s.f.	0	17	43
Resistance Value, "R"	8	37	69
% Moisture at Test	13.2	11.5	10.7
Dry Density at Test, p.c.f.	119.0	123.0	126.0
"R" Value at 300 p.s.i. Exudation Pressure	= (34)		

CONFORMED

File No. T8326-M1
Lab. No. 11706
February 4, 1972
Job No. 23-118-70

3151

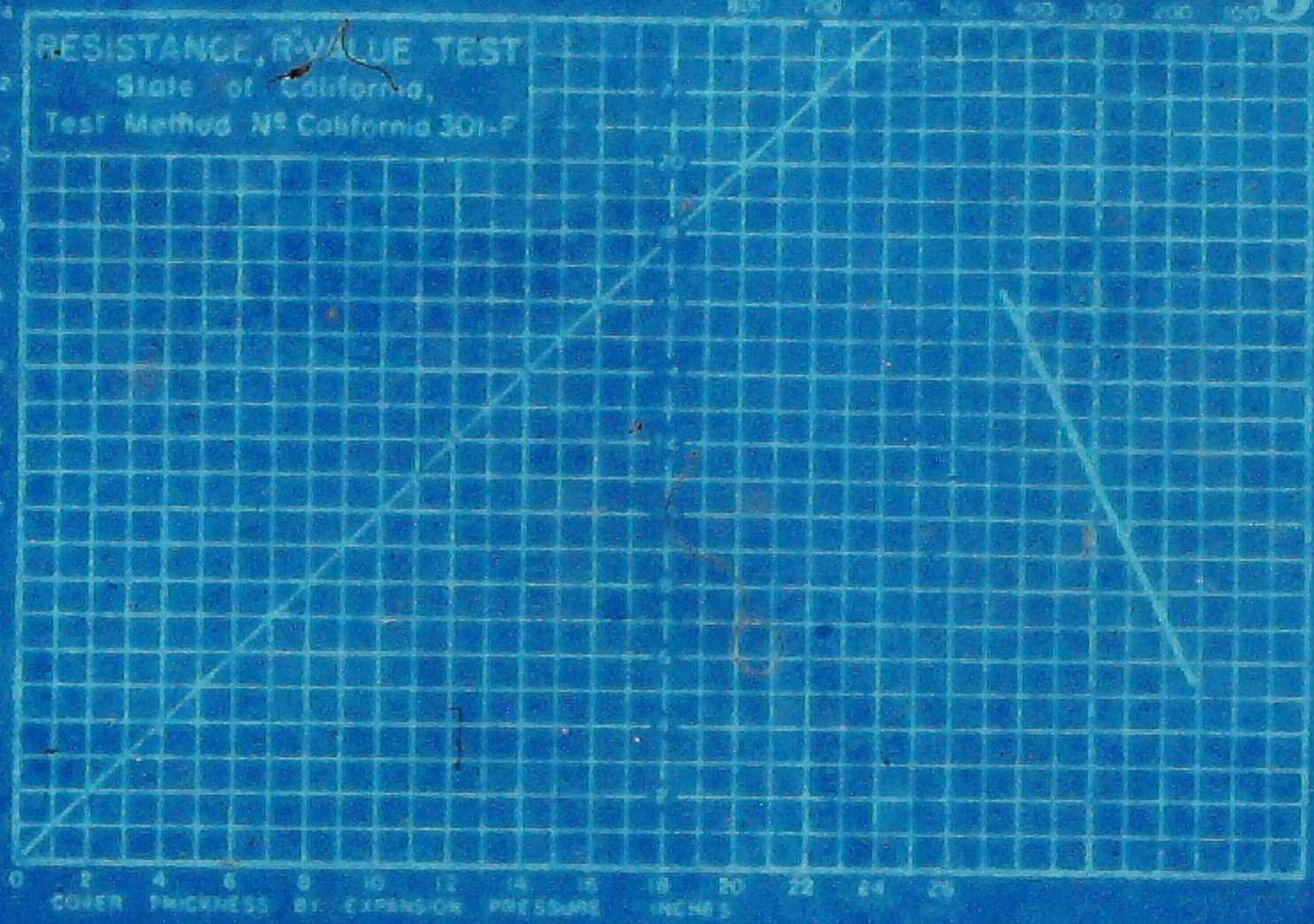

Sample: Pt. XV at 3.0' to 3.5'

Description: Silty clay with some sand.

Specimen	A	B	C
Exudation Pressure, p.s.i.	183	342	422
Expansion dial (.0001")	0	4	10
Expansion Pressure, p.s.f.	0	17	43
Resistance Value, "R"	12	44	60
% Moisture at Test	11.8	11.0	10.1
Dry Density at Test, p.c.f.	123.7	126.5	127.4
"R" Value at 300 p.s.i. Exudation Pressure	= (35)		

CONFORMED

File No: T8328-NH
Lab. No. 11706
February 4, 1972
Job No. 23-238-70

3151

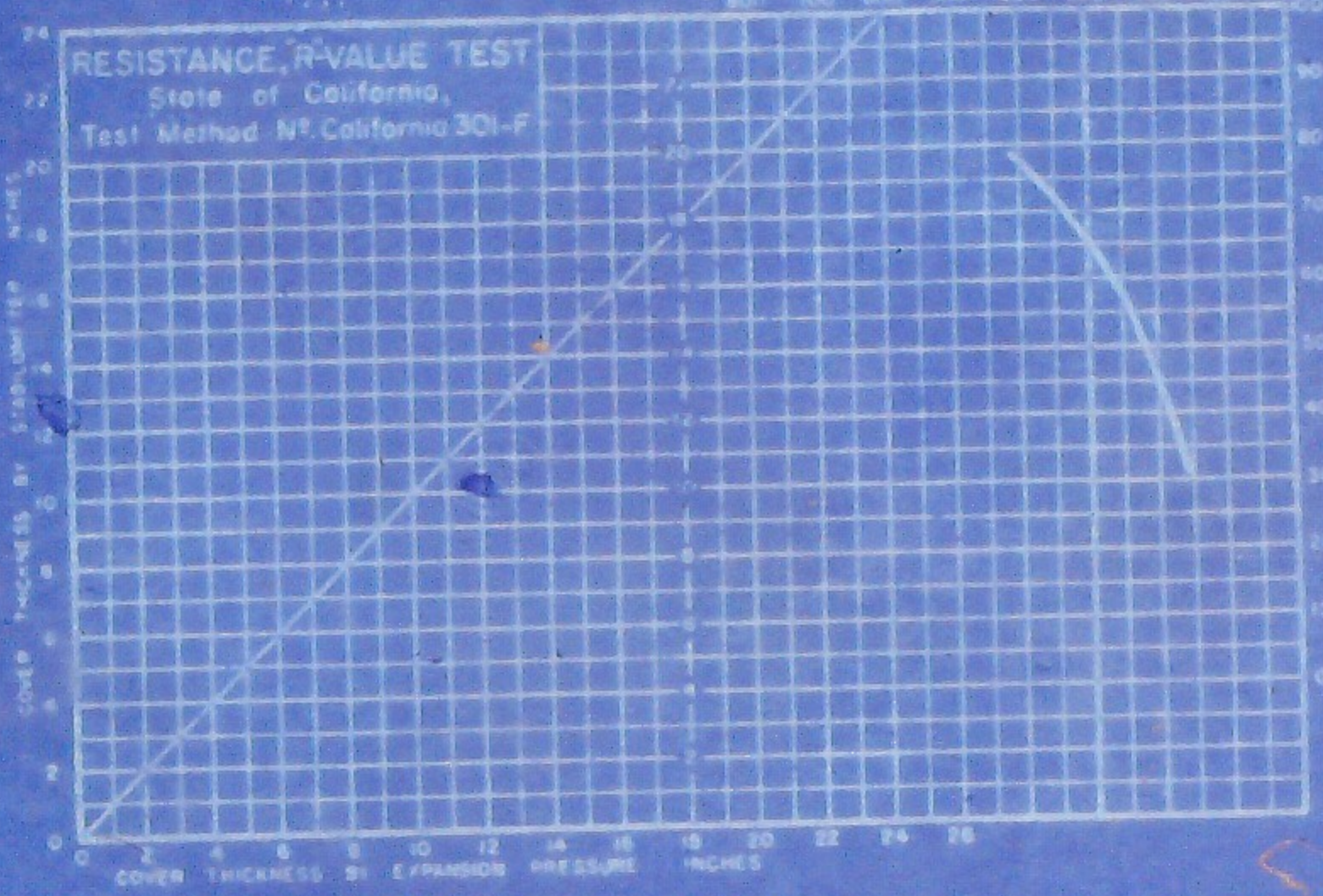

Sample: Pt. XVI at 3.0'

Description: Tan sandy silt.

Specimen	A	B	C
Exudation Pressure, p.s.i.	175	279	398
Expansion dial (.0001")	4	15	65
Expansion Pressure, p.s.f.	17	65	282
Resistance Value, "R"	38	63	77
% Moisture at Test	17.0	15.7	14.8
Dry Density at Test, p.c.f.	111.5	113.0	114.5
"R" Value at 300 p.s.i. Exudation Pressure	= (66)		

CONFORMED

Job No. 23-238-70

LOGS OF TEST PITS

TEST PIT NO.	DEPTH (feet)	DESCRIPTION
TP-1	0 to 1'-8"	Dark brown to black clay, high plasticity, moist.
	1'-8" to 2'-3"	Light greyish tan sandy silt, damp.
	2'-3" to 4'-0"	Grading moist to very moist.
TP-2	0 to 3'-0"	Dark brown clay, high plasticity, damp to moist
	3'-0" to 4'-0"	Light tan clay, damp.
TP-3	0 to 1'-0"	Black clay, high plasticity, very moist to wet.
	1'-0" to 2'-6"	Grading drier.
	2'-6" to 4'-0"	Light tan clay, high plasticity, very moist.
TP-4	0 to 1'-6"	Black clay, high plasticity, very moist to wet.
	1'-6" to 2'-6"	Grading drier.
	2'-6" to 4'-0"	Light tan silty clay, moderate cohesion.
TP-5	0 to 1'-6"	Black clay, high plasticity, very moist.
	1'-6" to 2'-6"	Grading drier.
	2'-6" to 3'-6"	Light tan silty clay, low plasticity, slightly damp.
TP-6	0 to 2'-6"	Black clay, high plasticity, very moist to wet.
	2'-6" to 4'-0"	Tan silty clay, low to moderate plasticity, slightly damp.
TP-7	0 to 2'-0"	Black clay, high plasticity, moist.
	2'-0" to 3'-0"	Light tan silty clay, low plasticity, slightly damp.
TP-8	0 to 2'-6"	Black clay, high plasticity, moist.
	2'-6" to 4'-0"	Tan silty clay, low plasticity, slightly damp.

CONFORMED

Job No. 23-238-70

LOGS OF TEST PITS (continued)

TEST PIT NO.	DEPTH (feet)	DESCRIPTION
TP-9	0 to 2'-0"	Black clay, high plasticity, damp.
	2'-0" to 3'-6"	Tan silty clay, low plasticity, dry to slightly damp.
TP-10	0 to 2'-0"	Black clay, high plasticity, damp.
	2'-0" to 3'-6"	Tan silty clay, low plasticity, dry to slightly damp.
TP-11	0 to 2'-2"	Dark brown to black clay, high plasticity, damp.
	2'-2" to 3'-6"	Tan silty clay, low plasticity slightly damp.
TP-12	0 to 2'-0"	Black clay, high plasticity, damp to moist.
	2'-0" to 3'-6"	Tan silty clay with occasional fine gravel, dry to slightly damp
TP-13	0 to 2'-0"	Dark brown to black clay, high plasticity, moist.
	2'-0" to 3'-0"	Tan silty clay, slightly damp.
	3'-0" to 5'-0"	Tan silty clay with occasional fine gravel, dry to slightly damp
TP-14	0 to 1'-6"	Dark brown clay, high plasticity, moist.
	1'-6" to 3'-6"	Tan silty clay with occasional coarse sand to fine gravel, slightly damp.
TP-15	0 to 2'-0"	Black clay, high plasticity, moist.
	2'-0" to 3'-6"	Tan silty clay with occasional coarse sand to fine gravel, slightly damp.
TP-16	0 to 2'-6"	Black clay, high plasticity, moist.
	2'-6" to 3'-0"	Tan sandy silt, slightly damp.

CONFORMED

DIST.	COUNTY	ROUTE	POST MILES—TOTAL PROJECT	SHEET NO.	TOTAL SHEETS
04	SCl, Ala	680	M.7.2 / R6.8	254	363

BRIDGE ENGINEER — REGISTERED CIVIL ENGINEER NO. 8463

DATE APPROVED April 22, 1968

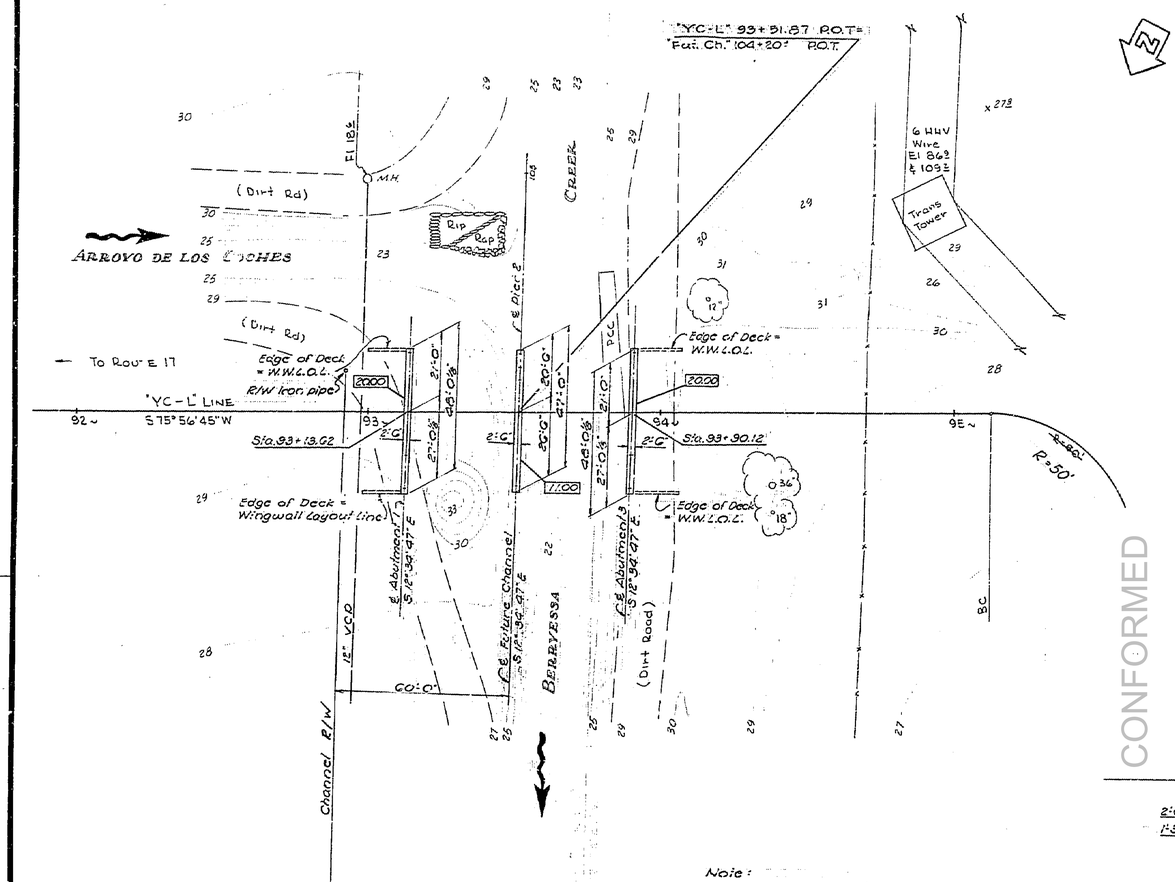

POT 16
Fd-1P in Man well at
℄ Dempsey & Calaveras Rd
Elev 42.130

TBM "A"
Set-top ginny 25' Lt
"YC-L" 93 ~
Elev 30.25

Note:

+ Indicates piles.

▭ Indicates bottom of footing elevations.

General Notes (Highway Structures)

Design: A.A.S.H.O. dated 1961 with revisions and as supplemented by Bridge Planning and Design Manual.

Live Loading: HS 20-44 and Alternative

Reinforced Concrete: F_s = 20,000 p.s.i., N = 10
F_c = 1,200 p.s.i.

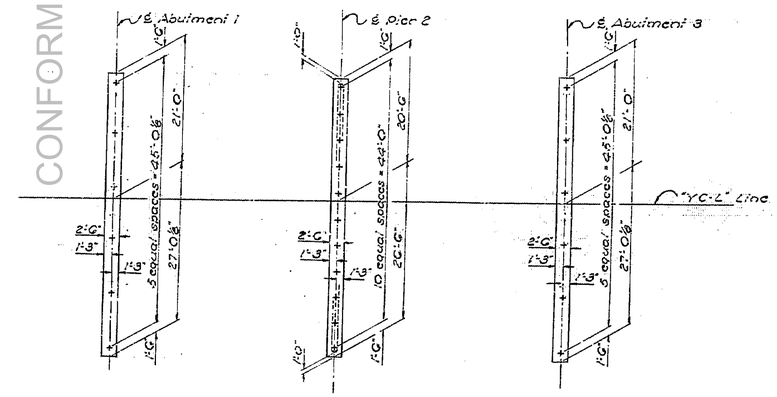

PILE LAYOUT
1" = 10'

PR-37C 57-1

SCALE 1" = 20'
LEVEL DATUM: USC & GS, MSL
FOR ALIGNMENT TIES SEE PR-37C57-3
CONTOURS AS OF 6-6-66
SITE PLAN TO SUPPLEMENT DISTRICT DATA.
SURVEY BY LHE DATE 6-6-66
DRAWN BY LHE DATE 7-7-66
TRACED BY JS DATE 7-7-66

AS BUILT
CORRECTIONS BY R. Ogata - M.G.
CONTRACT NO. 04-119504
DATE 11-9-70 / 4-8-71

AS BUILT PLANS
Contract No. 04-119504
Date Completed
Document No. 4/0003891

BRIDGE DEPARTMENT
DESIGN SECTION
Section Supervisor H. L. Gongola

DESIGN	By J. Clausen	7/67
	Checked C. W. Craig Jr.	9/67
DETAILS	By J. Clausen	7/67
	Checked C. W. Craig Jr.	9/67
QUANTITIES	By Joe Aguirre	12/67
	Checked K. Chang	12/67

STATE OF CALIFORNIA
HIGHWAY TRANSPORTATION AGENCY
DEPARTMENT OF PUBLIC WORKS
DIVISION OF HIGHWAYS

BERRYESSA CREEK BRIDGE

FOUNDATION PLAN

BRIDGE NO.	POST MILE	DRAWING NO.	SHEET	OF
37C-57		S 7C 57-2	2	5

REVISION DATES (PRELIMINARY STAGE ONLY)

Disregard prints bearing earlier revision dates

E-37

WO
CU

254

I HEREBY CERTIFY THAT THIS IS A TRUE AND ACCURATE COPY OF THE ABOVE DOCUMENT TAKEN UNDER MY DIRECTION AND CONTROL ON THIS DATE IN SACRAMENTO, CALIFORNIA PURSUANT TO AUTHORIZATION BY THE DIRECTOR OF PUBLIC WORKS.

DATE 4/13/71 SIGNATURE [illegible] TITLE [illegible]

CONFORMED

MICROFILM - STATE OF CALIFORNIA - DEPARTMENT OF PUBLIC WORKS - MICROFILM

ClibPDF - www.fastio.com

Revised Footing Note, Title Bar, & the Seismic Load Loading 10 Apr 68 EJS

Changed 1'-0" in Sec "AA" to 1'-3" JRJ 6-15-66

Deleted "Wingwall Elev" Revised Fillet on Part Plan-Part", #6 Bars in "Sec A-A", Reinforcing in "Sec F-F", Title Block 3 Jan 66 EJS

DIST	COUNTY	ROUTE	POST MILES-TOTAL PROJECT	SHEET NO.	TOTAL SHEETS
04	SCl Alz	680	M 7.2/R6.8	255	363

Bridge Engineer — Civil Engineer — Locale Engr

Date Approved April 22, 1968

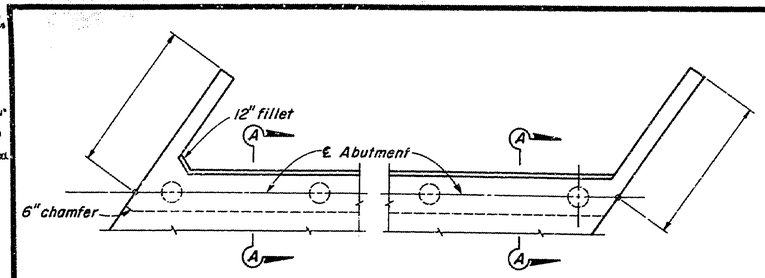

PART PLAN-ABUTMENT
With Skew

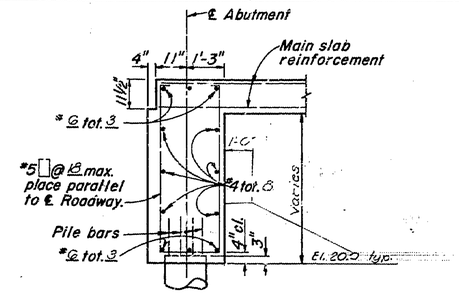

SECTION A-A

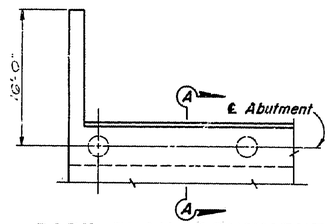

PART PLAN-ABUTMENT
No Skew

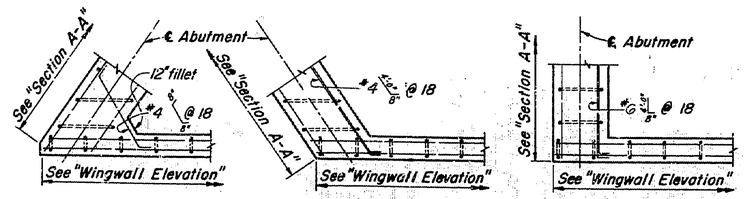

SECTIONS F-F
With Skew — No Skew

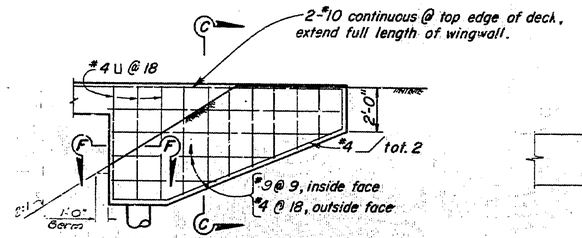

WINGWALL ELEVATION
Curb and Railing not shown

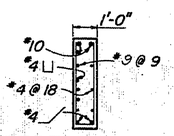

SECTION C-C

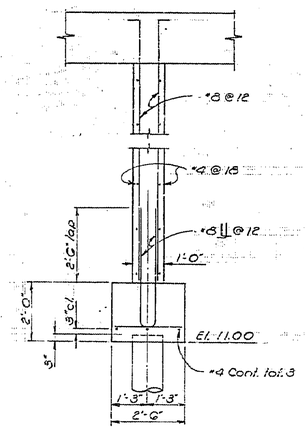

SECTION THRU PIER
½" = 1'-0"

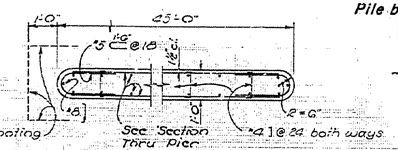

SECTION THRU PIER STEM
½" = 1'-0"

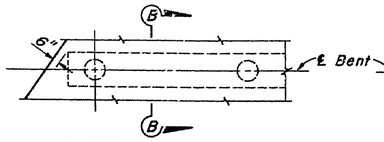

PART PLAN-BENT
With Skew

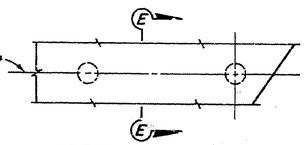

PART PLAN-BENT
With Skew

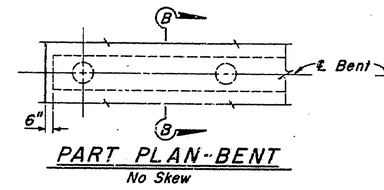

PART PLAN-BENT
No Skew

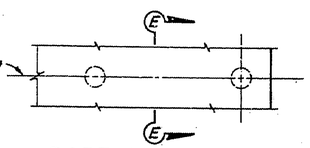

PART PLAN-BENT
No Skew

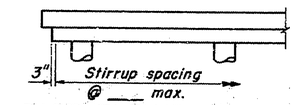

PART ELEVATION-BENT

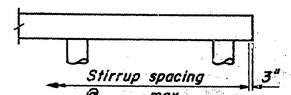

PART ELEVATION-BENT

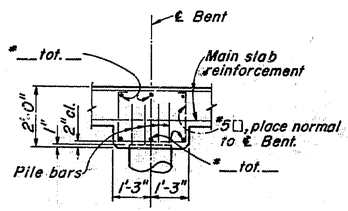

SECTION B-B

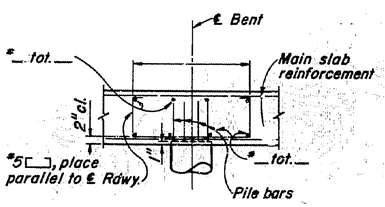

SECTION E-E

No As Built Changes
AS BUILT
CORRECTIONS BY R. Ogata - M.G.
CONTRACT NO. 04-119504
DATE 11-9-70/4-8-71

AS BUILT PLANS
Contract No. 04-119504
Date Completed
Document No. 4/0003891

LIVE LOADING: HS 20-44 & ALTERNATIVE

STANDARD DRAWING
Submitted by: Bridge Engineer
Design Engineer: Bridge Engineer
Approved Recommendation: Bridge Engineer
Date Approved: 1-7-66
Date Issued: 1-7-66
Date Issued: 6-1-66

1/66 — STATE OF CALIFORNIA TRANSPORTATION AGENCY DEPARTMENT OF PUBLIC WORKS DIVISION OF HIGHWAYS — XS-12-37

BERRYESSA CREEK BRIDGE

ABUTMENT AND PIER DETAILS

BRIDGE NO.	POST MILE	DRAWING NO.	SHEET	OF
37C-57		37C57-3	3	5

REVISION DATES (PRELIMINARY STAGE ONLY)
Disregard prints bearing earlier revision dates
2/24/61 3/1/62 1/15/66

255

CONFORMED

I HEREBY CERTIFY THAT THIS IS A TRUE AND ACCURATE COPY OF THE ABOVE DOCUMENT TAKEN UNDER MY DIRECTION AND CONTROL ON THIS DATE IN SACRAMENTO, CALIFORNIA PURSUANT TO AUTHORIZATION BY THE DIRECTOR OF PUBLIC WORKS.

DATE 4/1/71 SIGNATURE [illegible] TITLE [illegible]

MICROFILM - STATE OF CALIFORNIA - DEPARTMENT OF PUBLIC WORKS - MICROFILM

ClibPDF - www.fastio.com

DIST.	COUNTY	ROUTE	POST MILES—TOTAL PROJECT	SHEET No.	TOTAL SHEETS
04	SCl/Ala	680	M 12.1/R6.8	257	363

DESIGN ENGINEER REGISTERED CIVIL ENGINEER NO. 9583

DATE APPROVED April 22, 1968

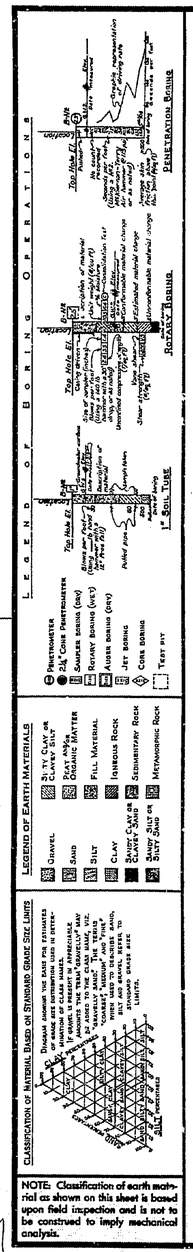

FIELD STUDY		
DRAWN	W. R. Fox	JAN-15-67
CHECKED	W. R. Fox	JAN-15-67
CHECKED	W. A. Mooney	12-20-67

Approval Recommended: Engineering Geologist

BRIDGE DEPARTMENT
ENGINEERING GEOLOGY SECTION

257

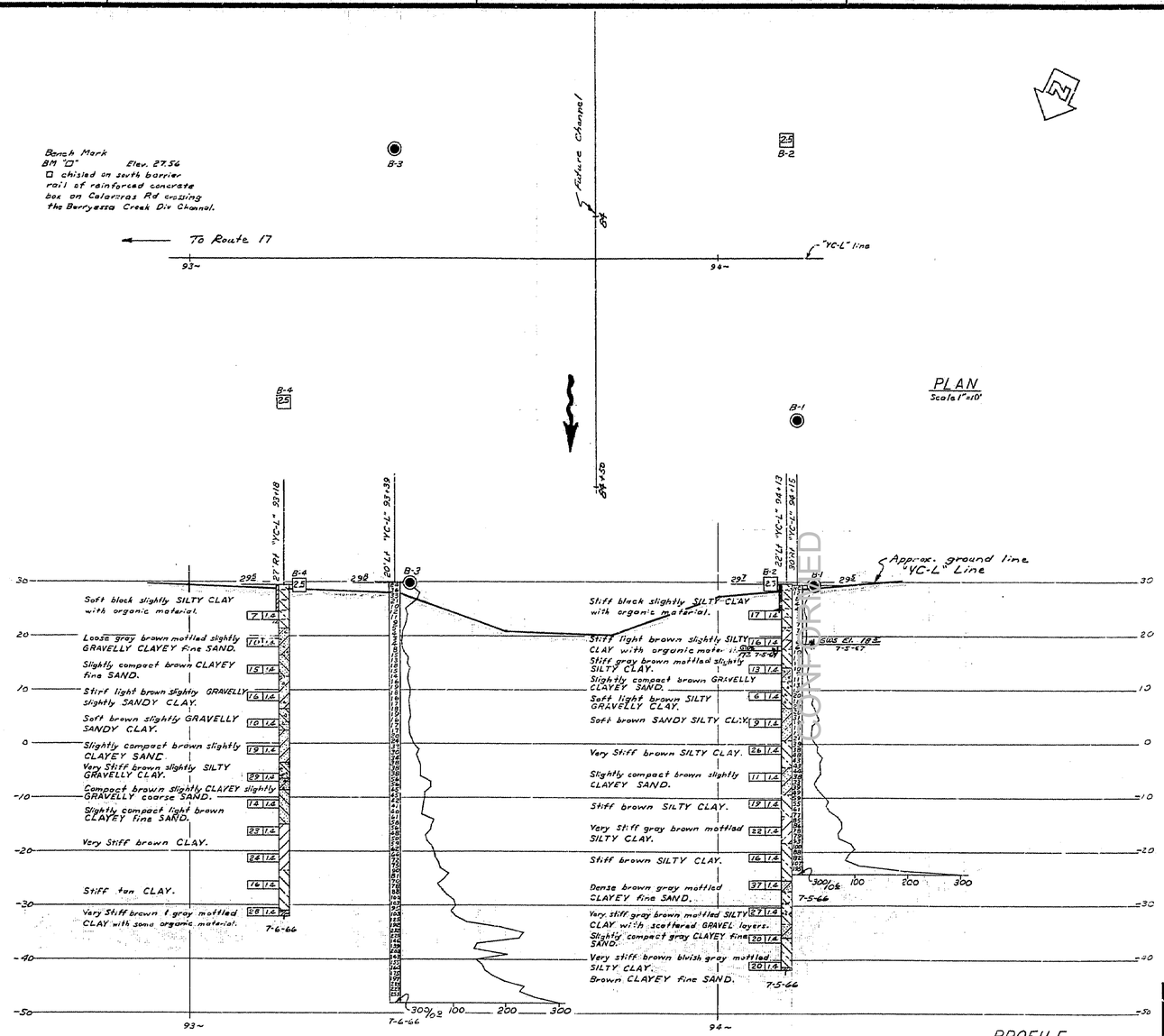

INFORMATION ON ACTUAL FOUNDATION CONDITIONS ENCOUNTERED IS ON FILE IN BRIDGE GEOLOGY SECTION

AS BUILT PLANS
Contract No. 04-119504
Date Completed
Document No. 41003891

STATE OF CALIFORNIA
TRANSPORTATION AGENCY
DEPARTMENT OF PUBLIC WORKS
DIVISION OF HIGHWAYS

BERRYESSA CREEK

LOG OF TEST BORINGS

BRIDGE NO.	POST MILE	DRAWING NO.	SHEET	OF
37C-57		37C57-5	5	5

REVISION DATES (PRELIMINARY STAGE ONLY)

10/12/67

WO 119503
CU 04204

PR-37C57-2
Disregard prints bearing earlier revision dates

I HEREBY CERTIFY THAT THIS IS A TRUE AND ACCURATE COPY OF THE ABOVE DOCUMENT TAKEN UNDER MY DIRECTION AND CONTROL ON THIS DATE IN SACRAMENTO, CALIFORNIA PURSUANT TO AUTHORIZATION BY THE DIRECTOR OF PUBLIC WORKS.

DATE 4/13/2011 SIGNATURE [illegible] TITLE [illegible]

MICROFILM - STATE OF CALIFORNIA - DEPARTMENT OF PUBLIC WORKS - MICROFILM
SCALE 1"=50' SCALE 1"=20' SCALE 1"=10' or 1"=100' SCALE 1"=40'

ClibPDF - www.fastio.com

DIST.	COUNTY	ROUTE	POST MILES—TOTAL PROJECT	SHEET NO.	TOTAL SHEETS
04	SCl, Ala	680	M 7.2 / R6.8	253	369

BRIDGE ENGINEER — REGISTERED CIVIL ENGINEER NUMBER 5595

ASSISTANT STATE HIGHWAY ENGINEER — REGISTERED CIVIL ENGINEER NUMBER 5390

DATE APPROVED April 22, 1968

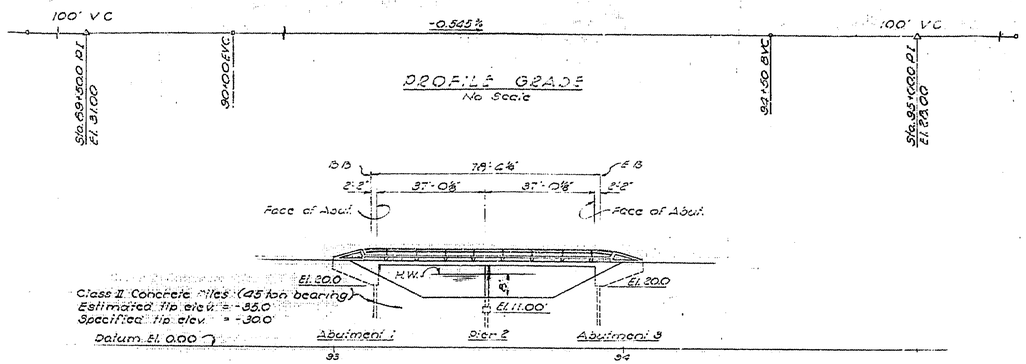

Note All piles driven to Specified tip exactly

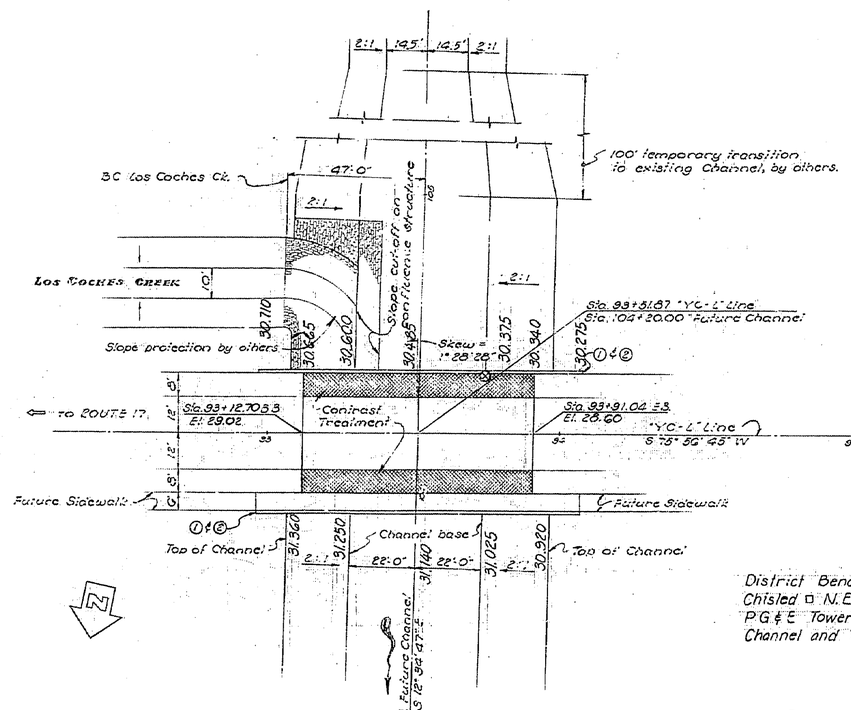

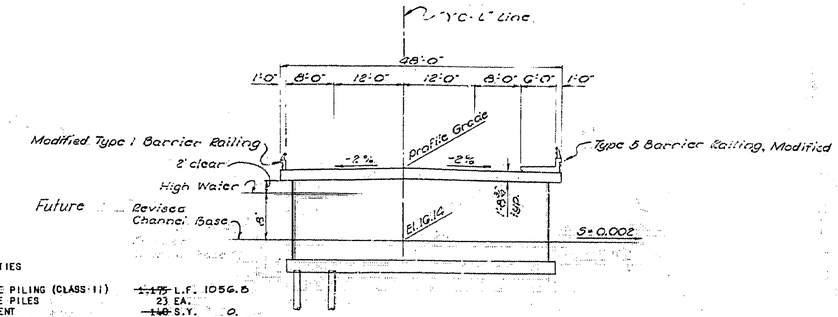

APPROXIMATE QUANTITIES

FURNISH CONCRETE PILING (CLASS II)	~~1,175~~ L.F.	1056.5
DRIVING CONCRETE PILES	23 EA.	
CONTRAST TREATMENT	~~140~~ S.Y.	0.
BARRIER RAILING (TYPE 1 MODIFIED)	~~110~~ L.F.	108.5
BARRIER RAILING (TYPE 5 MODIFIED)(6')	~~110~~ L.F.	108.4

FINAL QUANTITIES

STRUCTURE EXCAVATION (BRIDGE)	140 C.Y.
STRUCTURE BACKFILL (BRIDGE)	85 C.Y.
CLASS A CONCRETE (BRIDGE)	350 C.Y.
BAR REINFORCING STEEL (BRIDGE)	64,000 LBS.

Note: All tooled concrete surfaces stained Red Brown

INDEX TO PLANS

Sheet No.	Title
1	General Plan
2	Foundation Plan
3	Abutment and Pier Details
4	Slab Details - 2 Spans
5	Log of Test Boring

The following sheets to be found in the "STANDARD PLANS" book dated 1968:

B2-1	Concrete Pile Details 45T
B11-0	Barrier Railing Types 1, 4 & 5
B11-1	Barrier Railing Types 1, 4 & 5
B11-2	Barrier Railing Details

See Calaveras Road Undercrossing -37-302 for the following structure detail sheets:

- A1 Modified Barrier Railing Details -S
- A2 Modified Barrier Railing Details -A
- A3 Bridge Approach Guard Railing - Layout
- A4 Modified Bridge Approach Guard Railing
- A5 Barrier Railing Details -Steel Post
- A6 Type 1 Slope Paving Details

AS BUILT PLANS
Contract No. 04-119504
Date Completed
Document No. 4 00023891

AS BUILT
CORRECTIONS BY D.J. Patterson - M.G.
CONTRACT NO. 04-119504
DATE 11-9-70 / 4-8-71

District Bench Mark
Chisled □ N.E. Corner of N.E. PCC Base
P.G.&E. Tower in S.W. Quad of Berryessa
Channel and YC-L Line. Elev. 29.255

The future channel had not been construct at Contract end. Vertical clearance was not measured.

① Point No. of Bridge & Year constructed.
② Point Name of Bridge
⊗ Point of min. vertical clearance

FOR GENERAL NOTES SEE "Foundation Plan & Grid Grades"

LIVE LOADING H30-44 AND ALTERNATIVE

BRIDGE DEPARTMENT
*** DESIGN SECTION *** 6

Section Supervisor H. J. Pr
Project Designer L.H. Goldwell

DESIGN	by J. Oliveira 7/67	Checked C.W. Bragh 9/67	
DETAILS	by J. Oliveira 7/67	Checked C.W. Bragh 9/67	
LAYOUT	by J. Oliveira 7/67	Checked C.W. Bragh 9/67	
QUANTITIES	by L. Johnson 10/67	Checked R.	
SPECIFICATIONS	by L. Bailey 1968	Plans and Specs. Compared	

Approval Recommended by — Approved: Chief, Div. Bridge Design, Licensed No. 17348

STATE OF CALIFORNIA
TRANSPORTATION AGENCY
DEPARTMENT OF PUBLIC WORKS
DIVISION OF HIGHWAYS

BERRYESSA CREEK BRIDGE

LOCATED .5 MI. S. OF CALAVERAS RD. AND .2 MI. S. OF JACKLIN ROAD IN THE CITY OF MILPITAS IN SANTA CLARA COUNTY.

GENERAL PLAN

BRIDGE NO.	POST MILE	DRAWING NO.	SHEET	OF
37C-57		37C57-1	1	5

WO 119501
CU 04 204

Disregard prints bearing earlier revision dates

REVISION DATES (PRELIMINARY STAGE ONLY)

253

I HEREBY CERTIFY THAT THIS IS A TRUE AND ACCURATE COPY OF THE ABOVE DOCUMENT TAKEN UNDER MY DIRECTION AND CONTROL ON THIS DATE IN SACRAMENTO, CALIFORNIA PURSUANT TO AUTHORIZATION BY THE DIRECTOR OF PUBLIC WORKS.

DATE 4/19/71 SIGNATURE [illegible] TITLE [illegible]

MICROFILM - STATE OF CALIFORNIA - DEPARTMENT OF PUBLIC WORKS - MICROFILM

ClibPDF - www.fastio.com

DIST.	COUNTY	ROUTE	POST MILES—TOTAL PROJECT	SHEET No.	TOTAL SHEETS
04	SCl, Ala	680	M 7.2 / R6.8	253	363

BRIDGE ENGINEER — REGISTERED CIVIL ENGINEER NUMBER 5560

ASSISTANT STATE HIGHWAY ENGINEER — REGISTERED CIVIL ENGINEER NUMBER 5390

DATE APPROVED April 22, 1968

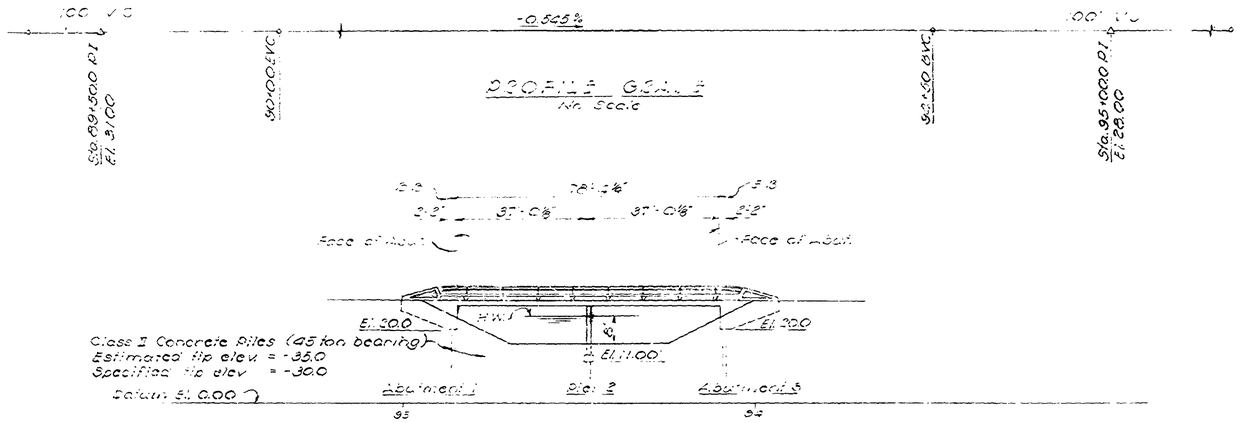

Note: All piles driven to Specified tip exactly

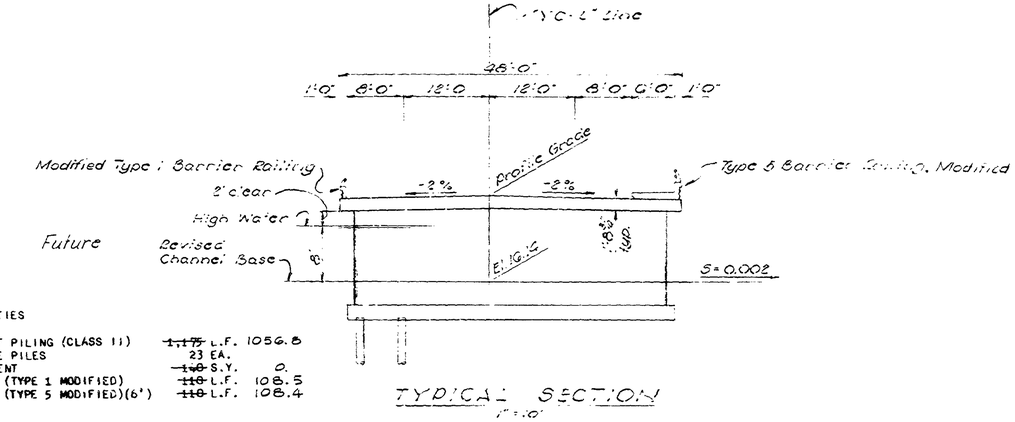

APPROXIMATE QUANTITIES

FURNISH CONCRETE PILING (CLASS II)	~~1,175~~ L.F.	1056.8
DRIVING CONCRETE PILES	23 EA.	
CONTRAST TREATMENT	~~140~~ S.Y.	0.
BARRIER RAILING (TYPE 1 MODIFIED)	~~110~~ L.F.	108.5
BARRIER RAILING (TYPE 5 MODIFIED)(6')	~~110~~ L.F.	108.4

FINAL QUANTITIES

STRUCTURE EXCAVATION (BRIDGE)	140 C.Y.
STRUCTURE BACKFILL (BRIDGE)	85 C.Y.
CLASS A CONCRETE (BRIDGE)	350 C.Y.
BAR REINFORCING STEEL (BRIDGE)	64,000 LBS.

Note: All tooled concrete surfaces stained Red Brown

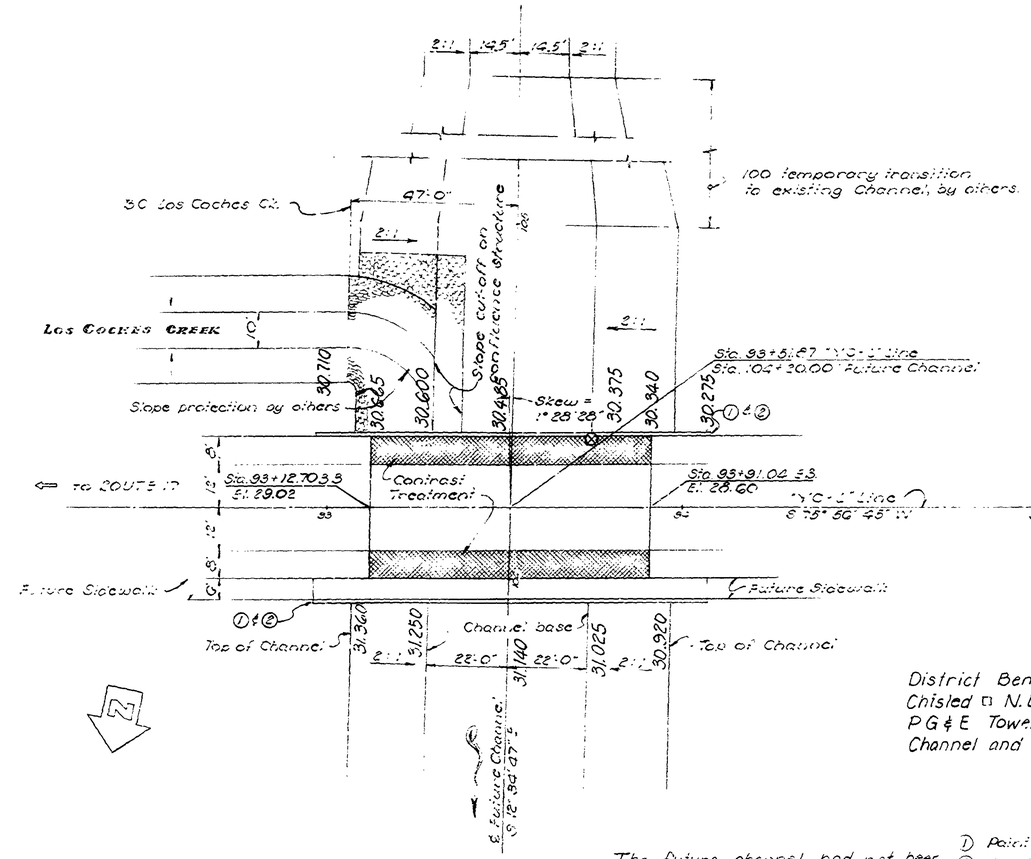

100' temporary transition to existing Channel, by others.

The future channel had not been construct at Contract end Vertical clearance was not measured.

District Bench Mark
Chisled □ N.E. Corner of N.E. PCC Base
P G & E Tower in S.W. Quad of Berryessa Channel and YC-L Line. Elev. 29.255

① Point No. of Bridge & Year constructed.
② Point Name of Bridge
③ Point of min. vertical clearance

FOR GENERAL NOTES SEE "Foundation Plan & Grid Grades"

LIVE LOADING HS20-44 AND ALTERNATIVE

INDEX TO PLANS

Sheet No. — Title
1 ——— General Plan
2 ——— Foundation Plan
3 ——— Abutment and Pier Details
4 ——— Slab Details - 2 Spans
5 ——— Log of Test Boring

The following sheets to be found in the "STANDARD PLANS" book dated 1968
B2-1 ——— Concrete Pile Details 45T
B11-0 ——— Barrier Railing Type 1
B11-1 ——— Barrier Railing Types 2,4,5
B11-2 ——— Barrier Railing Details
See Calaveras Road Undercrossing - 37-302 for the following structure detail sheets:
A1 Modified Barrier Railing Details - S
A2 Modified Barrier Railing Details - A
A3 Bridge Approach Guard Railing - Layout
A4 Modified Bridge Approach Guard Railing
A5 Barrier Railing Details - Steel Post
A-6 Type 1 Slope Paving Details

AS BUILT PLANS
Contract No. 04-119504
Date Completed
Document No. 41000389

AS BUILT
CORRECTIONS BY D.J. Patterson - M.G.
CONTRACT NO. 04-119504
DATE 11-9-70 / 4-8-71

CONFORMED

BRIDGE DEPARTMENT
··· DESIGN SECTION ··· 6
Section Supervisor H. L. Paul
Project Designer L. H. Caldwell

DESIGN	By J. Chimura 7/67	Checked C. W. Bragg 9/67		
DETAILS	By J. Chimura 7/67	Checked C. W. Bragg 9/67		
LAYOUT	By J. Chimura 8/67	Checked C. W. Bragg 9/67		
QUANTITIES	By L. Nelson 10/67	Checked K. Bergman 11/67		
SPECIFICATIONS	By H. Burkert 1968	Plans and Specs. Comp. by		
Approval Recommended by		Registered Civil Engr. License No. 6720		

STATE OF CALIFORNIA
TRANSPORTATION AGENCY
DEPARTMENT OF PUBLIC WORKS
DIVISION OF HIGHWAYS

BERRYESSA CREEK BRIDGE

LOCATED .5 MI. S. OF CALAVERAS RD. AND .2 MI. S. OF JACKLIN ROAD IN THE CITY OF MILPITAS IN SANTA CLARA COUNTY.

GENERAL PLAN

BRIDGE NO.	POST MILE	DRAWING NO.	SHEET	OF
37C-57		37C57-1	1	5

REVISION DATES (PRELIMINARY STAGE ONLY)

WO 119501
CU 04 204

Disregard prints bearing earlier revision dates

253

I HEREBY CERTIFY THAT THIS IS A TRUE AND ACCURATE COPY OF THE ABOVE DOCUMENT TAKEN UNDER MY DIRECTION AND CONTROL ON THIS DATE IN SACRAMENTO, CALIFORNIA PURSUANT TO AUTHORIZATION BY THE DIRECTOR OF PUBLIC WORKS.

ClibPDF - www.fastio.com

Revised Chart 3-61 RTK

Added Camber Diagram & notes revised thereto. FHS 5-9-62

Removed notes above "Longitudinal or Transverse Slab Const. Jt." detail 3-17-63 JFJ

Revised Title Block and Live Loading to HS-20-44 22 Sept 65 EJJ

Deleted "Notes". Revised: Steel Spacing note to Longitudinal Reg. Table; Title Block added "and Notes". 7 Jan 66 EJJ

DIST	COUNTY	ROUTE	POST MILES-TOTAL PROJECT	SHEET NO.	TOTAL SHEETS
04	Sol, Nap	680	M 7.2/R6.8	256	369

R. C. Blake
BRIDGE ENGINEER - CIVIL ENGINEER - STRUCTURE DESIGN

DATE APPROVED April 22, 1968

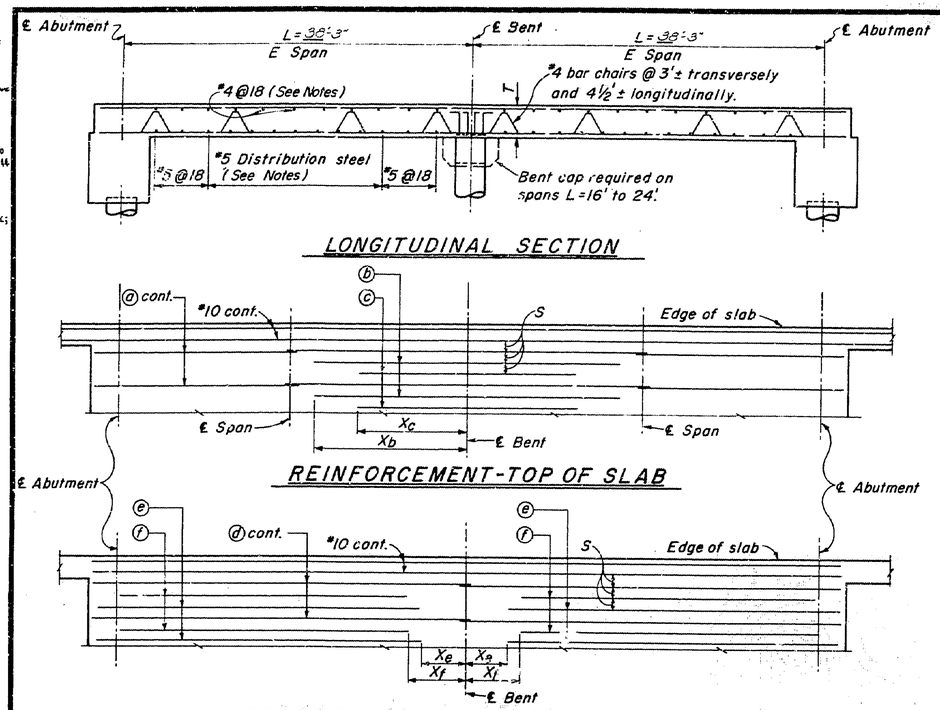

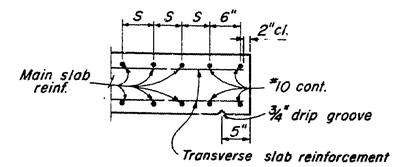

EDGE OF SLAB DETAIL

Curb and railing not shown

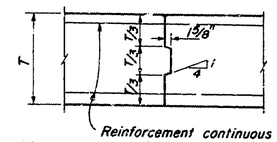

Note: Transverse joints, if used, to be located at ¼ point of span and longitudinal joint to be located at edge of traffic lanes unless otherwise permitted by the Engineer.

LONGITUDINAL OR TRANSVERSE SLAB CONSTRUCTION JOINT

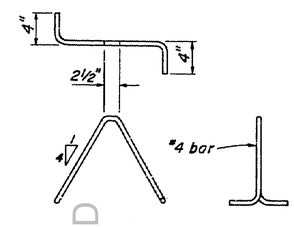

BAR CHAIR DETAIL

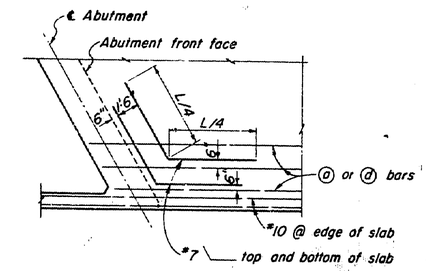

OBTUSE CORNER DETAIL

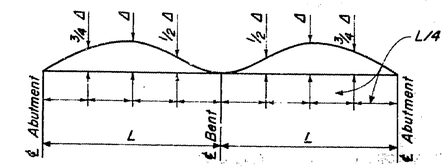

CAMBER DIAGRAM

TOTAL SLAB DEFLECTION DUE TO DEAD LOADS

The total deflection will be reached about 4 years after falsework removal. For values at time of falsework removal divide those shown by 4.

The amount of camber for construction will be determined by the Engineer.

REINFORCEMENT			
L = Length of Span			
Top of Slab	ⓐ bars	Size	#9
		Length	82'-0"
	ⓑ bars	Size	#11
		Length	21'-6"
		Xb	10'-9"
	ⓒ bars	Size	#11
		Length	11'-0"
		Xc	5'-6"
Bottom of Slab	ⓓ bars	Size	#9
		Length	81'-0"
	ⓔ bars	Size	#9
		Length	31'-6"
		Xe	7'-6"
	ⓕ bars	Size	#10
		Length	24'-6"
		Xf	10'-3"
Dist.-Steel Spacing			9"
T = Thickness of slab			1'-8¾"
S = Bar Spacing			5½"
Clearance to main reinforcing			2"
Ultimate dead load deflection @ ℄ Span			.06'

NOTES :

Splices in top main bars to be 35 dia. and located near center of span.

Splices in bottom main bars to be 20 dia. and located near bent.

Spacing of #4 @ 18 is measured normal to bars.

Spacing of #5 bars in bottom of slab is measured along ℄ roadway. For spacing in center half of span see Table.

Place all transverse bars parallel to bent.

AS BUILT PLANS
Contract No. 04-119504
Date Completed
Document No. 4/0003891

No As Built Changes
AS BUILT
CORRECTIONS BY R. Ogata-M.G.
CONTRACT NO. 04-119504
DATE 11-9-70/4-8-71

LIVE LOADING: HS-20-44 and ALTERNATIVE

STANDARD DRAWING
Submitted by: John Ash
DESIGN: R. W. Hall
DETAILS: R. Wilkinson
Approved Recommended: W. T. Cook
Approved: R. C. Blake
BRIDGE ENGINEER
No. C 2149

1/66 STATE OF CALIFORNIA TRANSPORTATION AGENCY DEPARTMENT OF PUBLIC WORKS DIVISION OF HIGHWAYS XS-12-38

BERRYESSA CREEK BRIDGE

SLAB DETAILS-2 SPANS

BRIDGE NO.	POST MILE	DRAWING NO.	SHEET	OF
37C-57		37C57-4	4	5

REVISION	DATES	(PRELIMINARY STAGE ONLY)
7/66		

Disregard prints bearing earlier revision dates

I HEREBY CERTIFY THAT THIS IS A TRUE AND ACCURATE COPY OF THE ABOVE DOCUMENT TAKEN UNDER MY DIRECTION AND CONTROL ON THIS DATE IN SACRAMENTO, CALIFORNIA PURSUANT TO AUTHORIZATION BY THE DIRECTOR OF PUBLIC WORKS.

DATE 4/13/71 SIGNATURE [illegible] TITLE Sr. Draftsman

CONFORMED

ClibPDF - www.fastio.com

DIST.	COUNTY	ROUTE	POST MILES—TOTAL PROJECT	SHEET NO.	TOTAL SHEETS
04	SCl, Ala	680	M 7.2 / R6.8	254	363

BRIDGE ENGINEER — REGISTERED CIVIL ENGINEER NO. 5385

DATE APPROVED April 22, 1968

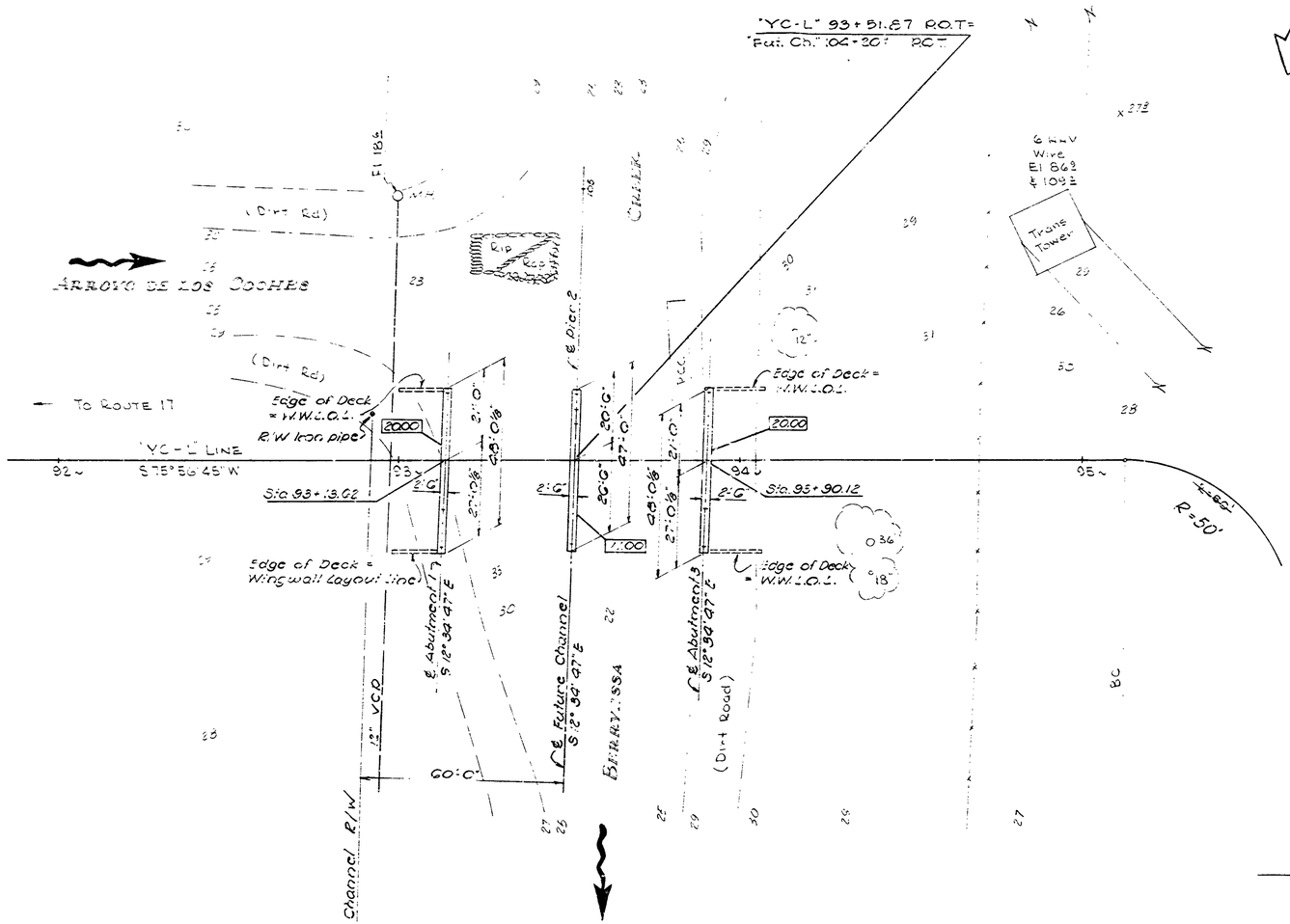

POT 16
Fd-1P in Mon well at
E Dempsey & Calaveras Rd
Elev 42.39

TBM "A"
Set-Top ginny 25 Lt
"YC-L" 93 ~
Elev 30.25

Note:

+ Indicates piles.

▭ Indicates bottom of footing elevations.

General Notes (Highway Structures)

Design: A.A.S.H.O. dated 1961 with revisions and as supplemented by Bridge Planning and Design Manual.

Live Loading: HS 20-44 and Alternative

Reinforced Concrete: F_s = 20,000 p.s.i., N = 10
F_c = 1,200 p.s.i.

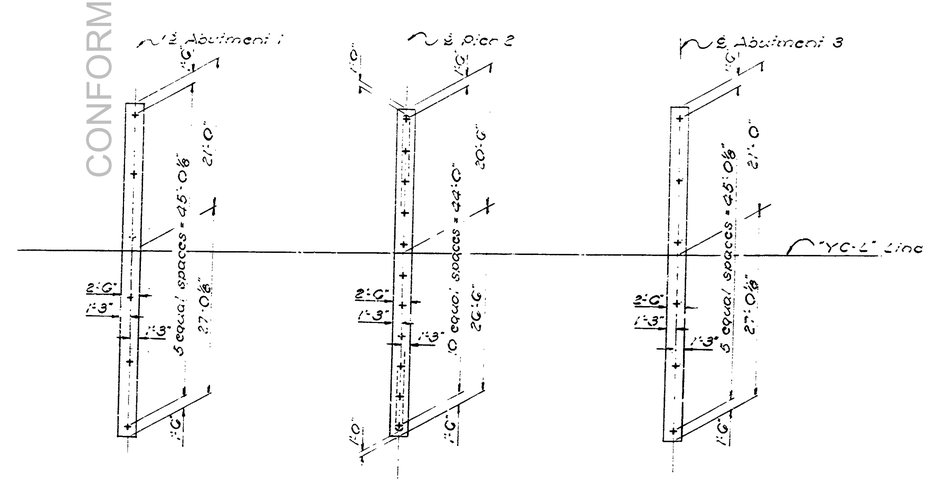

PILE LAYOUT
1" = 10'

CONFORMED

AS BUILT
CORRECTIONS BY R. Ogata - M.G.
CONTRACT NO. 04-119504
DATE 11-9-70 / 4-8-71

AS BUILT PLANS
Contract No. 04-119504
Date Completed
Document No. S/0003891

SCALE	1" = 20'
LEVEL DATUM	U.S.C.&G.S. 1929
FOR ALINEMENT TIES SEE	PR. 37C57-3
CONTOURS AS OF	6-6-66
SITE PLAN TO SUPPLEMENT DISTRICT DATA.	
SURVEY BY	JHE DATE 6-6-66
DRAWN BY	JHE DATE 7-7-66
TRACED BY	JS DATE 7-7-66

BRIDGE DEPARTMENT
DESIGN SECTION

Section Supervisor H. L. Gingle

DESIGN	By T. Chinuya	7/67
	Checked C. W. Craig Jr.	9/67
DETAILS	By T. Chinuya	7/67
	Checked C. W. Craig Jr.	9/67
QUANTITIES	By [illegible]	10/67
	Checked [illegible]	10/67

STATE OF CALIFORNIA
HIGHWAY TRANSPORTATION AGENCY
DEPARTMENT OF PUBLIC WORKS
DIVISION OF HIGHWAYS

BERRYESSA CREEK BRIDGE

FOUNDATION PLAN

PR-37C57-1

BRIDGE NO.	POST MILE	DRAWING NO.	SHEET	OF
37C-57		37C57-2	2	5

REVISION DATES (PRELIMINARY STAGE ONLY): 7/10/67 8/25/7 10/6

WC
CU

Disregard prints bearing earlier revision date: E-37

254

I HEREBY CERTIFY THAT THIS IS A TRUE AND ACCURATE COPY OF THE ABOVE DOCUMENT TAKEN UNDE IN

ClibPDF - www.fastio.com

Revised Railing Width Size, Title Block, Co Note Seq, and Live Loading
10 Aug 66 EJJ

Changed 1'-0" in Sec "AA" to
JTJ 8-25-66

Deleted "Wingwall Elev" Revised: Fillet in "Part Plan-Abut", #4 Bars in "Sec A-A", Reinforcing in "Sec F-F", Title Block
7 Jan 66 EJJ

DIST	COUNTY	ROUTE	POST MILES - TOTAL PROJECT	SHEET NO.	TOTAL SHEETS
04	SCl, Alg	680	M 7.2 / R6.8	235	363

Chief Bridge Engineer — Civil Engineer — Assistant Engineer

DATE APPROVED April 22, 1968

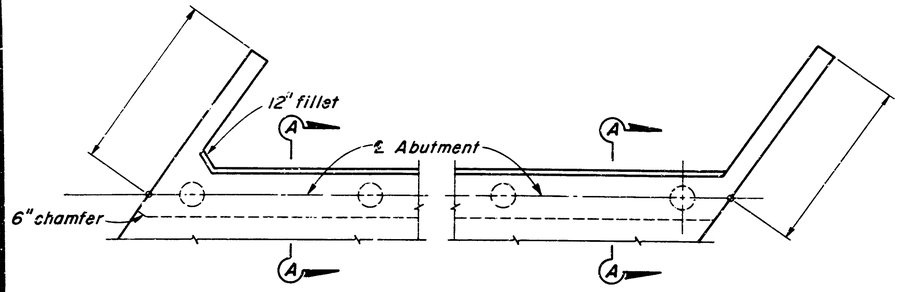

PART PLAN-ABUTMENT
With Skew

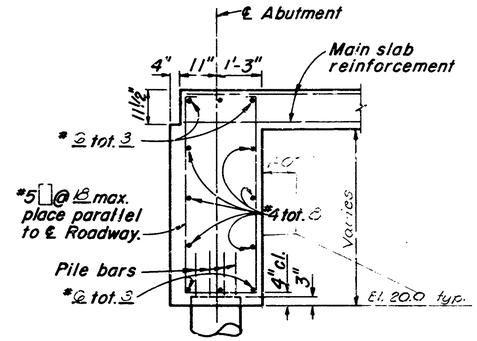

SECTION A-A

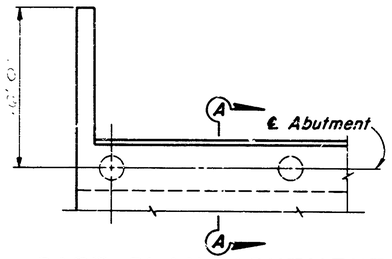

PART PLAN-ABUTMENT
No Skew

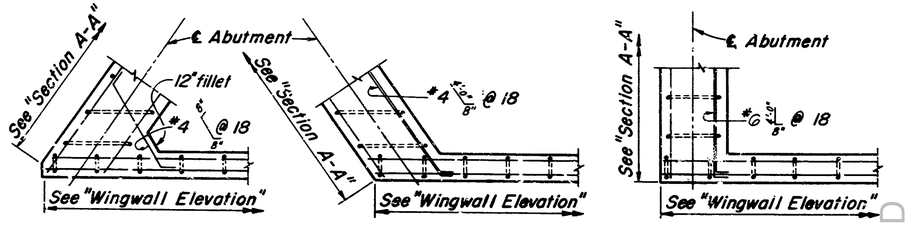

SECTIONS F-F
With Skew No Skew

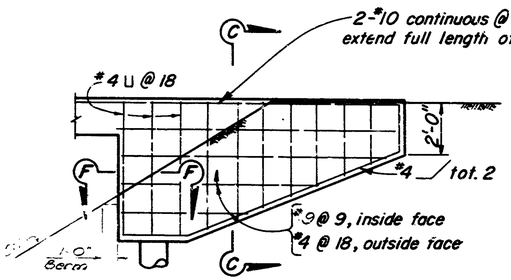

WINGWALL ELEVATION
Curb and Railing not shown

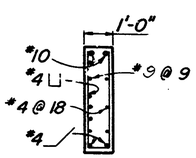

SECTION C-C

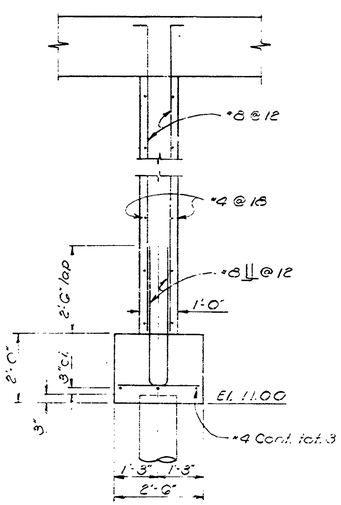

SECTION THRU PIER
½" = 1'-0"

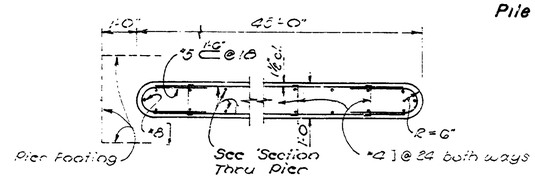

SECTION THRU PIER STEM
½" = 1'-0"

LIVE LOADING: HS 20-44 & ALTERNATIVE

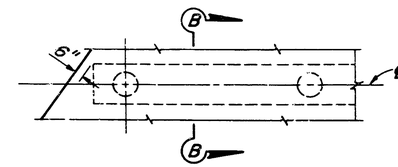

PART PLAN-BENT
With Skew

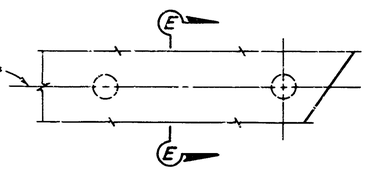

PART PLAN-BENT
With Skew

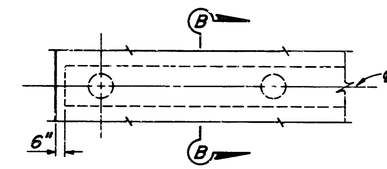

PART PLAN-BENT
No Skew

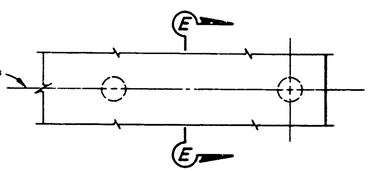

PART PLAN-BENT
No Skew

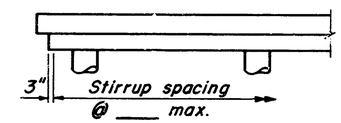

PART ELEVATION-BENT

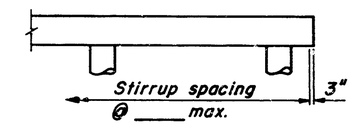

PART ELEVATION-BENT

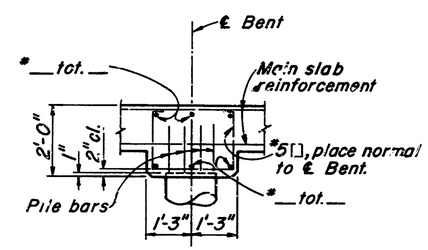

SECTION B-B

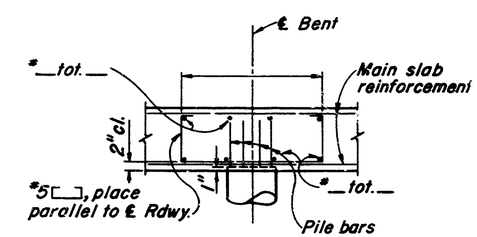

SECTION E-E

No As Built Changes
AS BUILT
CORRECTIONS BY R. Ogata - M.G.
CONTRACT NO. 04-119504
DATE 11-9-70 / 4-8-71

AS BUILT PLANS
Contract No. 04-119504
Date Completed
Document No. 1 0003891

STANDARD DRAWING
Submitted by: G. Sanders
DESIGN: R. Ogata 1-66
DETAILS: R. Ogata 1-66
Approval Recommended: 1-31-66
Approved: R. C. Blake
Chief Bridge Engineer
Chief Bridge Engineer
Chief Bridge Engineer
6129

1/66 — STATE OF CALIFORNIA TRANSPORTATION AGENCY DEPARTMENT OF PUBLIC WORKS DIVISION OF HIGHWAYS — XS-12-37

BERRYESSA CREEK BRIDGE

ABUTMENT AND PIER DETAILS

BRIDGE NO.	POST MILE	DRAWING NO.	SHEET	OF
37C-57		37C57-3	3	5

REVISION DATES (PRELIMINARY STAGE ONLY)
7/24/68 8/27 1/15/69

W.O.

Disregard prints bearing earlier revision dates

235

I HEREBY CERTIFY THAT THIS IS A TRUE AND ACCURATE COPY OF THE ABOVE DOCUMENT TAKEN UNDER MY DIRECTION AND CONTROL OF [illegible] TO

CONFORMED

ClibPDF - www.fastio.com

Revised Chart 3-61 RTK

Added Camber Diagram & notes relat. thereto. FWS 5-9-62

Removed notes about longitudinal or transverse slab Const. jt detail 3-19-63 JT

Revised Title Block and use Loading to HS-20-44 22 Sept 65 EJJ

Deleted "Notes". Revised: Steel Anchor note in Longitudinal Sec; Table; Title Block added "Alternative". 7 Jan 66 EJJ

DIST	COUNTY	ROUTE	POST MILES-TOTAL PROJECT	SHEET NO.	TOTAL SHEETS
04	SCl. Ala	680	M 7.2/R6.8	256	363

Bridge Engineer — City Engineer — License No.

Date approved April 22, 1968

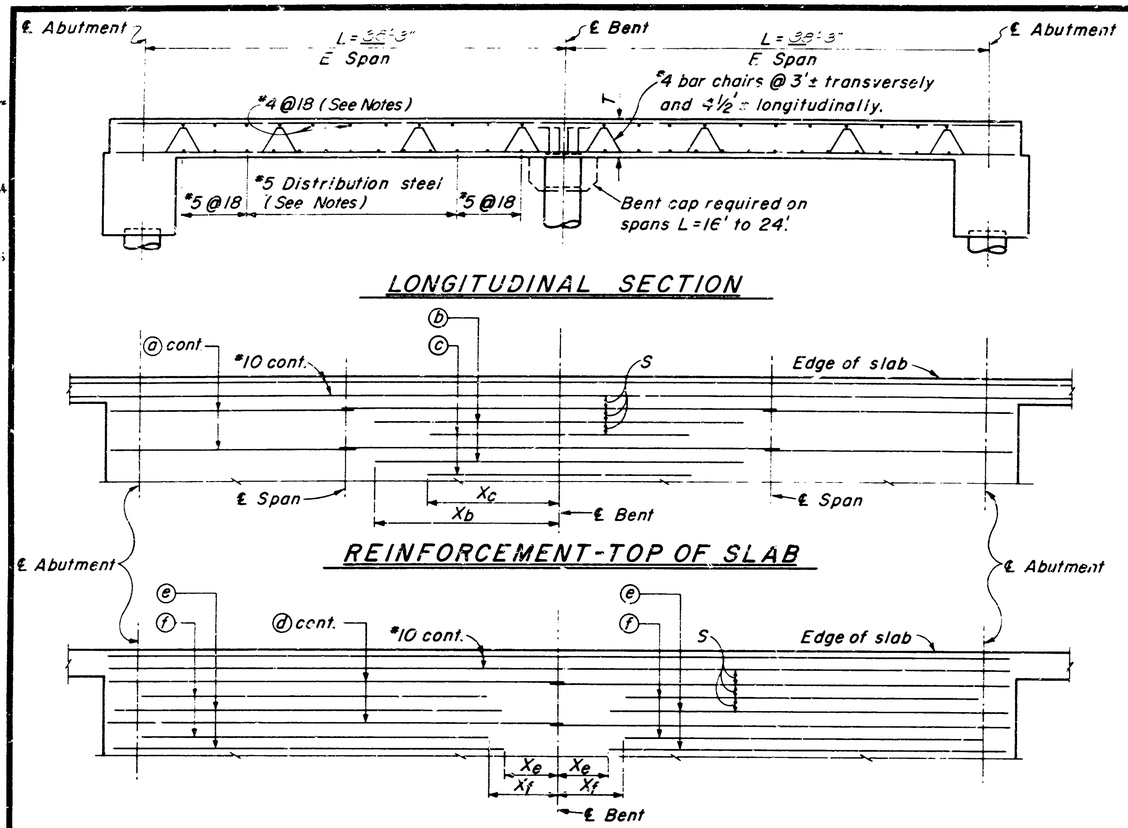

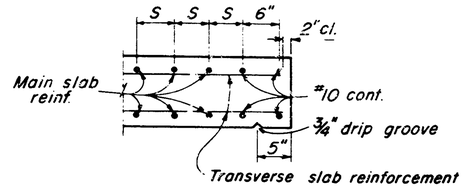

EDGE OF SLAB DETAIL

Curb and railing not shown

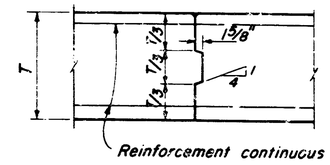

Note: Transverse joints, if used, to be located at ¼ point of span and longitudinal joint to be located at edge of traffic lanes unless otherwise permitted by the Engineer.

LONGITUDINAL OR TRANSVERSE SLAB CONSTRUCTION JOINT

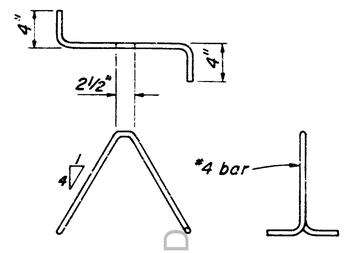

BAR CHAIR DETAIL

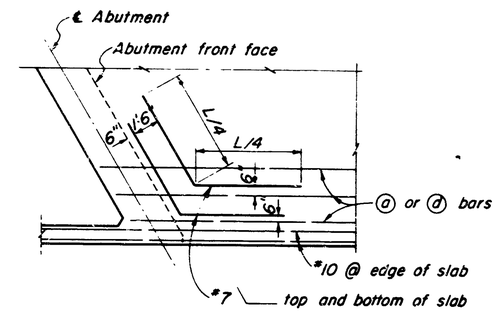

OBTUSE CORNER DETAIL

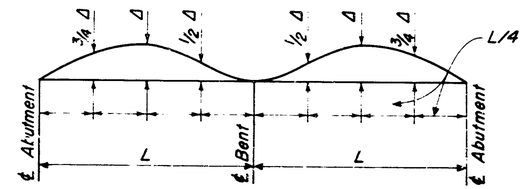

CAMBER DIAGRAM

TOTAL SLAB DEFLECTION DUE TO DEAD LOADS

The total deflection will be reached about 4 years after falsework removal. For values at time of falsework removal divide those shown by 4.

The amount of camber for construction will be determined by the Engineer.

L=Length of Span			
REINFORCEMENT	Top of Slab	ⓐ bars	Size #9
			Length 82'-0"
		ⓑ bars	Size #11
			Length 21'-6"
			Xb 10'-9"
		ⓒ bars	Size #11
			Length 11'-0"
			Xc 5'-6"
	Bottom of Slab	ⓓ bars	Size #9
			Length 81'-0"
		ⓔ bars	Size #9
			Length 31'-6"
			Xe 7'-6"
		ⓕ bars	Size #10
			Length 84'-6"
			Xf 10'-3"
Dist-Steel Spacing			9"
T=Thickness of slab			1'-6¾"
S=Bar Spacing			5½"
Clearance to main reinforcing			2"
Ultimate dead load deflection @ ℄ Span			.06'

NOTES :

Splices in top main bars to be 35 dia. and located near center of span.

Splices in bottom main bars to be 20 dia and located near bent.

Spacing of #4 @ 18 is measured normal to bars.

Spacing of #5 bars in bottom of slab is measured along ℄ roadway. For spacing in center half of span see Table.

Place all transverse bars parallel to bent.

LIVE LOADING: HS-20-44 and ALTERNATIVE

AS BUILT PLANS
Contract No. 04-119504
Date Completed
Document No. 1/0003891

No As Built Changes
AS BUILT
CORRECTIONS BY R. Ogata-M.G.
CONTRACT NO. 04-119504
DATE 11-9-70/4-8-71

STANDARD DRAWING
Submitted for Approval: DESIGN R. C. Blake; DETAILS R. C. Blake; Approval Recommended for: W. T. Hook; Approved: 6724

1/66 — STATE OF CALIFORNIA TRANSPORTATION AGENCY DEPARTMENT OF PUBLIC WORKS DIVISION OF HIGHWAYS — XS-12-38

BERRYESSA CREEK BRIDGE

SLAB DETAILS-2 SPANS

BRIDGE NO. 37C-57 | POST MILE | DRAWING NO. 37C57-4 | SHEET 4 OF 5

REVISION DATES (PRELIMINARY STAGE ONLY) 7/28/67

Disregard prints bearing earlier revision dates

I HEREBY CERTIFY THAT THIS ... OF ...

CONFORMED

ClibPDF - www.fastio.com

DIST.	COUNTY	ROUTE	POST MILES—TOTAL PROJECT	SHEET NO.	TOTAL SHEETS
04	SCl/Ala	680	M7.2/R6.8	207	363

BRIDGE ENGINEER — REGISTERED CIVIL ENGINEER NO. 15585

DATE APPROVED April 22, 1968

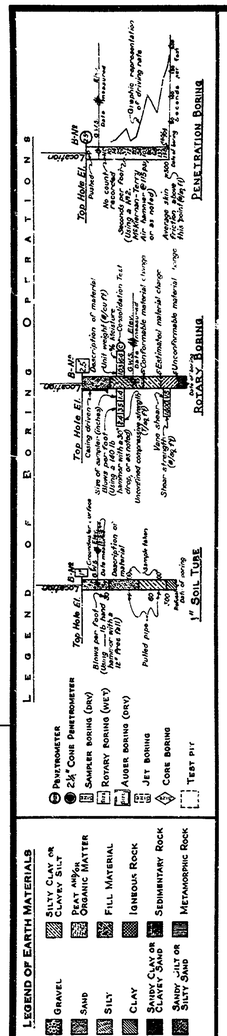

NOTE: Classification of earth material as shown on this sheet is based upon field inspection and is not to be construed to imply mechanical analysis.

FIELD STUDY	By R. Fox	
DRAWN	By K. Gallie	10-14-67
CHECKED	By M. Hershey	10-20-67

Approval Recommended by: Engineering Geologist

BRIDGE DEPARTMENT
ENGINEERING GEOLOGY SECTION

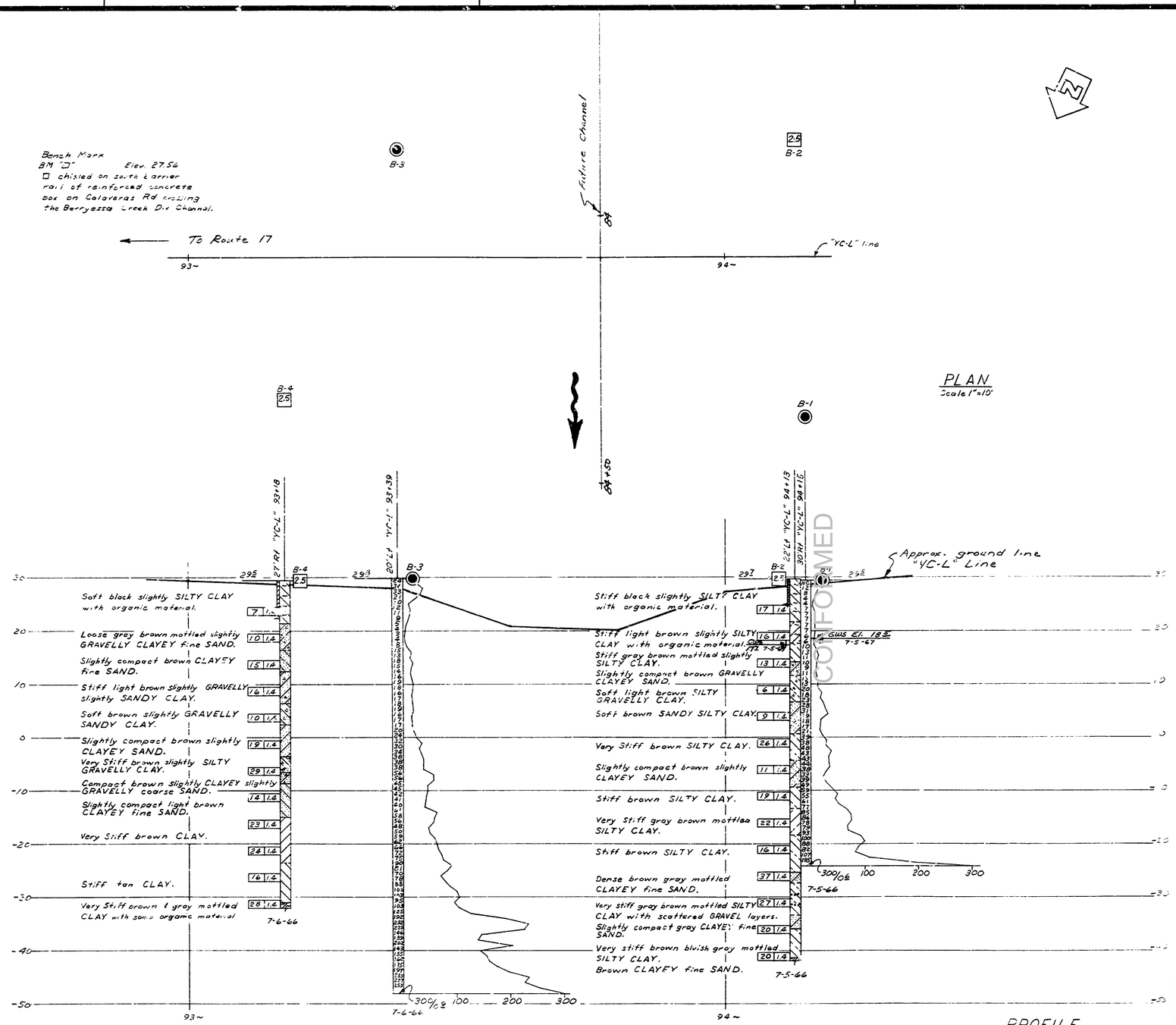

INFORMATION ON ACTUAL FOUNDATION CONDITIONS ENCOUNTERED IS ON FILE IN BRIDGE GEOLOGY SECTION

AS BUILT PLANS
Contract No. 04-119504
Date Completed
Document No. 4 0003891

STATE OF CALIFORNIA
TRANSPORTATION AGENCY
DEPARTMENT OF PUBLIC WORKS
DIVISION OF HIGHWAYS

BERRYESSA CREEK

LOG OF TEST BORINGS

BRIDGE NO.	POST MILE	DRAWING NO.	SHEET	OF
37C-57		37C57-5	5	14

WO 119503
CU 04204

PR-37C57-2
Disregard prints bearing earlier revision dates

REVISION DATES (PRELIMINARY STAGE ONLY)						
10/12/67						

I HEREBY CERTIFY THAT THIS IS A TRUE AND ACCURATE COPY OF THE ABOVE DOCUMENT TAKEN UNDER MY DIRECTION AND CONTROL ON THIS DATE IN SACRAMENTO, CALIFORNIA PURSUANT TO AUTHORIZATION BY THE DIRECTOR OF PUBLIC WORKS.

ClibPDF - www.fastio.com

PROFILE GRADE

NO SCALE

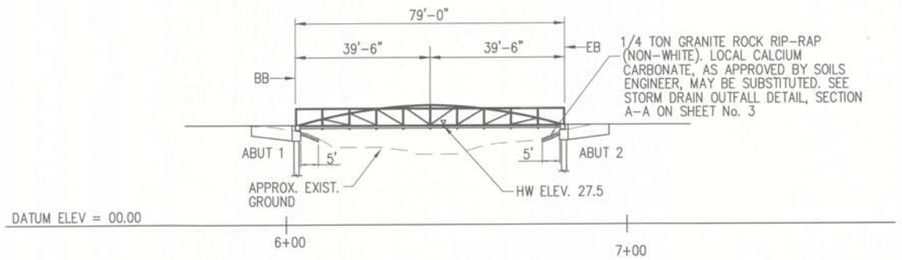

ELEVATION

SCALE: 1"=20'

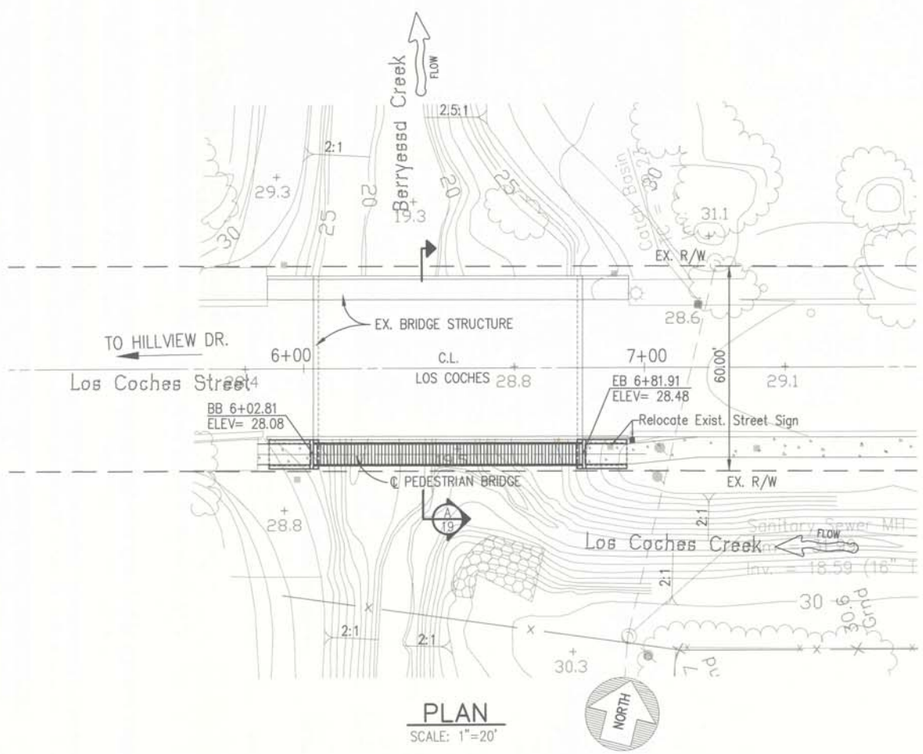

PLAN

SCALE: 1"=20'

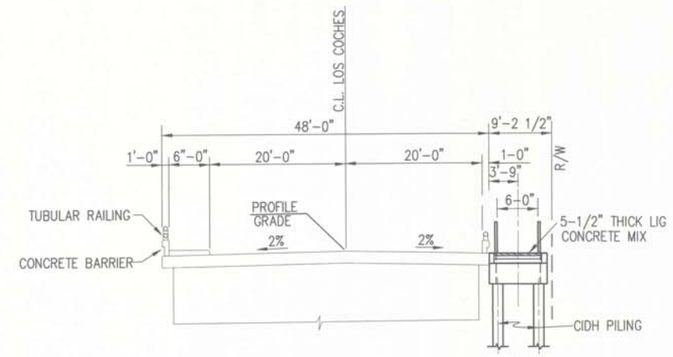

TYPICAL SECTION (A)

SCALE: 1"=10'

NOTES:

1. LIVE LOAD: 100 PSF AND 1000# POINT LOAD
2. SUPERSTRUCTURE DESIGN DEAD LOAD:
   - TRUSS 200 PLF
   - LIGHT WEIGHT PCC DECK (5-1/2" MIN. MAXIMUM) △ 330 PLF
3. SEISMIC: 0.[illegible]g; DEPTH TO ROCK > 85'
4. △ SOIL PARAMETERS:
   - ACTIVE = [illegible] PCF
   - PASSIVE = 250 PCF
   - u = 0.35
   - Fb = 200 PSF
   - FOR PILES,
     - ISOLATION FACTOR = 2
     - MIN. SPACING = 3d(PILE DIAMETER)
     - SKIN FRICTION = 500 PSF
     - a = 0.46g, and ALLUVIUM(DEPTH TO BEDROCK) > 85'
5. △ CONTRACTOR SHALL PROVIDE STEEL TRUSS SHOP DRAWINGS FOR REVIEW AND APPROVAL 3 WEEKS PRIOR TO ISSUANCE OF BUILDING PERMIT

CONCRETE PILE DATA

LOCATION	DIAMETER	CUT OFF ELEV.	SPECIFIED TOP ELEV.
ABUTMENT 1	18"	23.83	7.83
ABUTMENT 2	18"	24.23	8.23

REGISTERED PROFESSIONAL ENGINEER MICHAEL R. COOPER 28072 Exp. 3/31/03 CIVIL STATE OF CALIFORNIA

ABREVIATIONS:

BB	BEGIN BRIDGE
EB	END BRIDGE
PSF	POUNDS PER SQUARE FOOT
PLF	POUNDS PER LINEAL FOOT
g	GRAVITY
CONT.	CONTINUOUS
MAX.	MAXIMUM

Record Drawings
To be completed prior to acceptance of work by the City
Signature & Seal: Michael R. Cooper Date: 3/31/03
P.E. No. 28072 Exp.
Public Works Inspector: N/A
Public Improvements officially Accepted by the City Council on:

SOIL ENGINEER:
ENGEO INCORPORATED
2401 CROW CANYON ROAD, SUITE 200
SAN RAMON, CA 94523
CONTACT: JULIA MORIARTY
(510) 838-1600

REGISTERED PROFESSIONAL ENGINEER FRANK G. FONG No. 27852 Exp. 3/31/2002 CIVIL STATE OF CALIFORNIA

CONFORMED

Ruggeri - Jensen Azar & Associates
ENGINEERS • PLANNERS • SURVEYORS
100 N. MILPITAS BLVD., SUITE 160, • MILPITAS, CA 95035
PHONE: (408) 934-1388 • FAX: (408) 934-1288

GENERAL PLAN
PEDESTRIAN BRIDGE AT BERRYESSA CREEK
SINCLAIR HORIZONS – TRACT 9018
MILPITAS, CALIFORNIA
FOR THE MISSION PEAK COMPANY, INC.

REVISIONS

NUM	DATE	BY	DESCRIPTION	CITY ENGR. APPR.	DATE
△	6/30	TP	REVISIONS PER BUILDING DIVISION COMMENTS		

CITY OF MILPITAS
PUBLIC WORKS DEPARTMENT
ENGINEERING DIVISION

APPROVED:
City Engineer — Date
Any changes to public improvements shall be approved by the City Engineer.
Recommended for approval: Fire Dept. — Date; Engineering — Date

Project No. 3033
File No. 2-918
Sheet 19 of 20

2-918 20/21

UPDATED: 07/02/1998 10:16am
ACAD FILE: 62031119.dwg

RJA JOB NUMBER: 962031

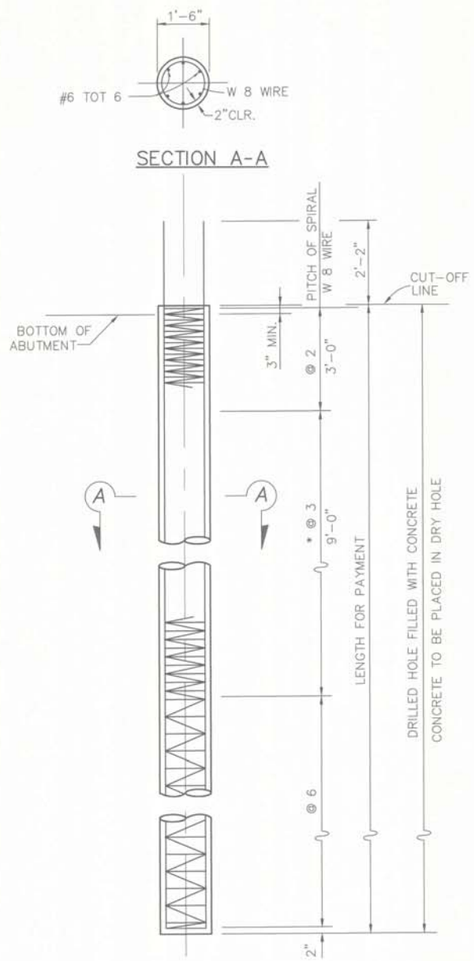

ELEVATION

* @ 2 AT OPTION OF CONTRACTOR

PILE NOTES:

1. LAPPED SPLICES IN SPIRAL PILE REINFORCEMENT SHALL BE LAPPED AT LEAST 80 WIRE DIAMETERS. SPIRAL PILE REINFORCEMENT AT SPLICES AND AT END SHALL BE TERMINATED WITH A 135° HOOK WITH 6" TAIL HOOKED AROUND A LONGITUDINAL BAR.

PILE DETAILS
SCALE: 1/2" = 1'-0"

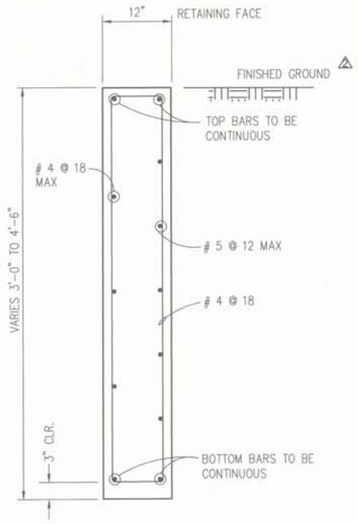

SECTION C-C
SCALE: 1" = 1'-0"

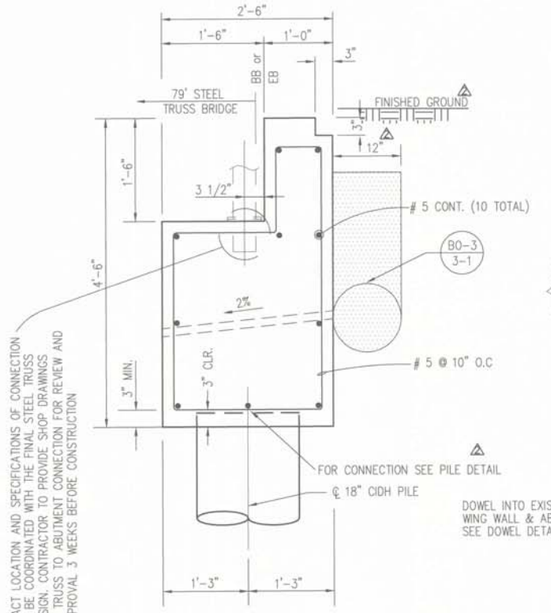

SECTION B-B
SCALE: 1" = 1'-0"

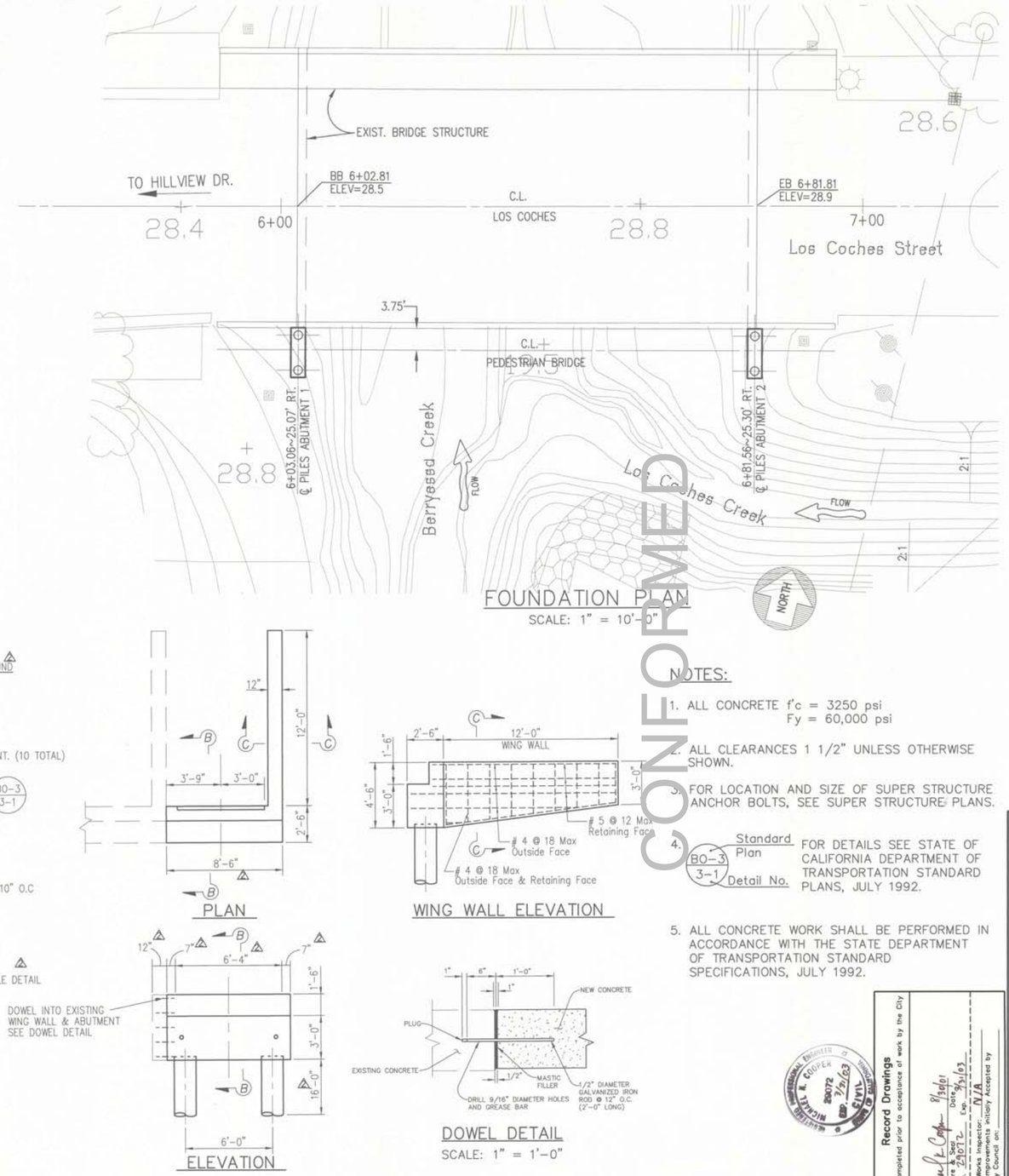

ABUTMENT No. 2
(Abutment No. 1 Mirror Image)
SCALE: 1/4" = 1'-0"

NOTES:

1. ALL CONCRETE f'c = 3250 psi
   Fy = 60,000 psi
2. ALL CLEARANCES 1 1/2" UNLESS OTHERWISE SHOWN.
3. FOR LOCATION AND SIZE OF SUPER STRUCTURE ANCHOR BOLTS, SEE SUPER STRUCTURE PLANS.
4. BO-3 / 3-1 (Standard Plan / Detail No.) FOR DETAILS SEE STATE OF CALIFORNIA DEPARTMENT OF TRANSPORTATION STANDARD PLANS, JULY 1992.
5. ALL CONCRETE WORK SHALL BE PERFORMED IN ACCORDANCE WITH THE STATE DEPARTMENT OF TRANSPORTATION STANDARD SPECIFICATIONS, JULY 1992.

CONFORMED

Record Drawings
To be completed prior to acceptance of work by the City
Signature & Seal: P.E. No. 27872 Exp. 3/31/03 Date 8/30/01
Public Works Inspector: N/A
Public improvements initially Accepted by the City Council on: ____

MICHAEL R. COOPER No. 28072 Exp. 3/31/03 CIVIL STATE OF CALIFORNIA

REGISTERED PROFESSIONAL ENGINEER FRANK G. FONG No. 27892 Exp. 3/31/03 CIVIL STATE OF CALIFORNIA

Ruggeri - Jensen - Azar & Associates
ENGINEERS • PLANNERS • SURVEYORS
100 N. MILPITAS BLVD., SUITE 160, • MILPITAS, CA 95035
PHONE (408) 934-1288 • FAX (408) 934-1288

ABUTMENT-WINGWALL-PILE DETAILS
PEDESTRIAN BRIDGE AT BERRYESSA CREEK
SINCLAIR HORIZONS - TRACT 9018
MILPITAS, CALIFORNIA
FOR THE MISSION PEAK COMPANY, INC.

NUM	DATE	BY	REVISIONS DESCRIPTION	CITY ENGR APPR.	DATE
1	6/30	TP	COMMENT		

CITY OF MILPITAS
PUBLIC WORKS DEPARTMENT
ENGINEERING DIVISION

APPROVED:
City Engineer Date
Any changes to public improvements shall be approved by the City Engineer.
Recommended for approval: Fire Dept. Date
Engineering Date

Project No. 3033
File No. 2-918
Sheet 20 of 20

2-918 4/21

UPDATED: 07/02/1998 10:16am
ACAD FILE: 62031/20.dwg

RJA JOB NUMBER: 962031

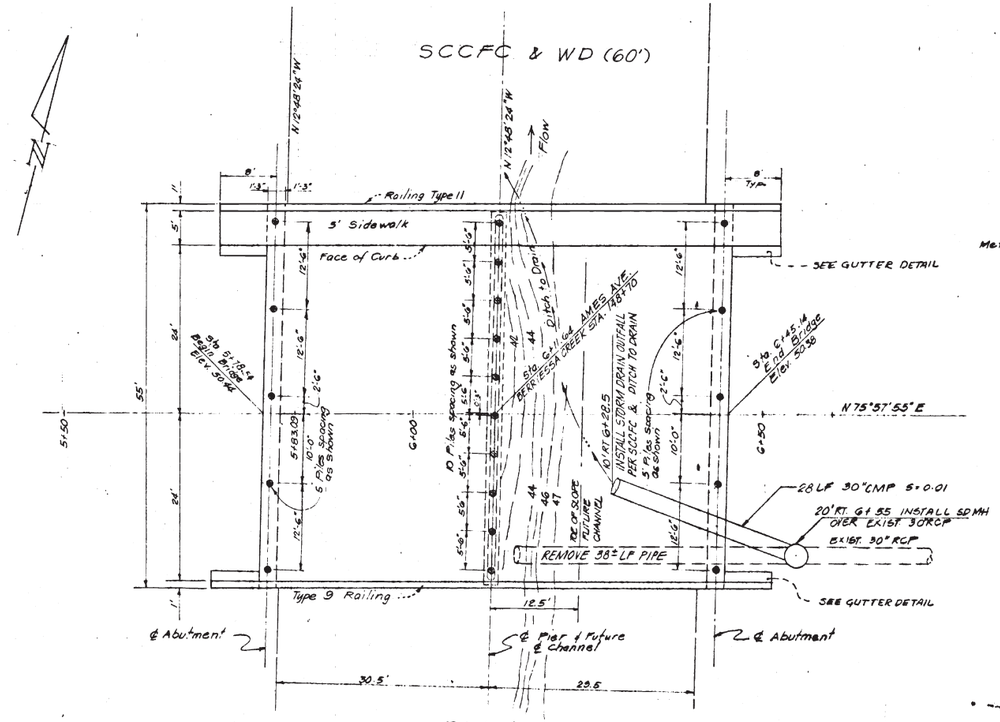

PLAN
SCALE: 1"=10'

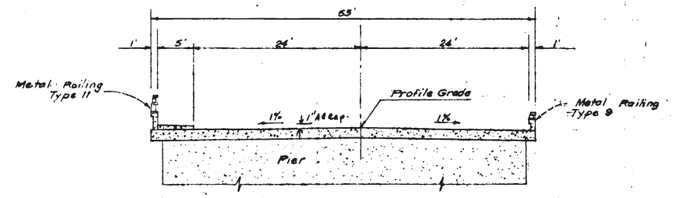

TYPICAL SECTION
SCALE 1"=10'

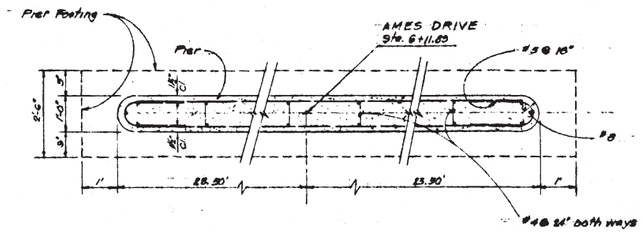

SECTION THRU PIER STEM
SCALE 1/2"=1'-0"

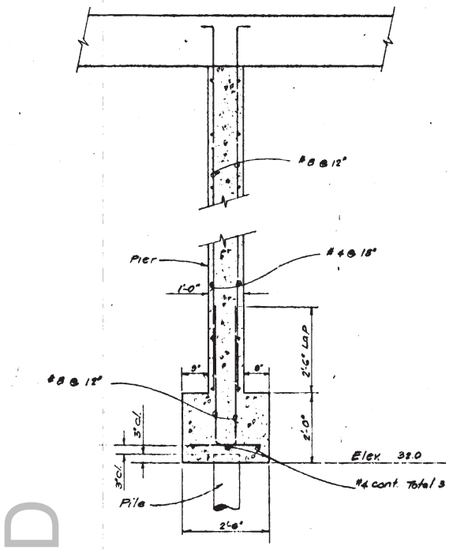

SECTION THRU PIER
SCALE: 1/2"=1'-0"

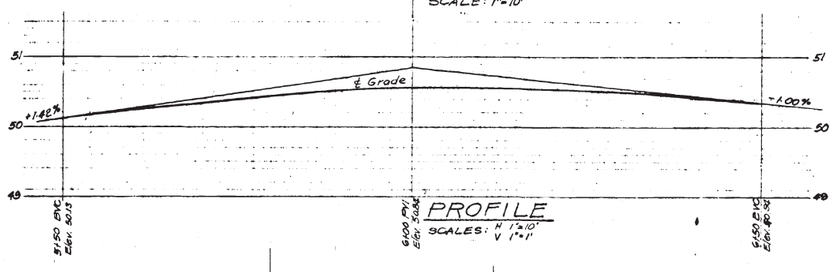

PROFILE
SCALES: H 1"=10' V 1"=1'

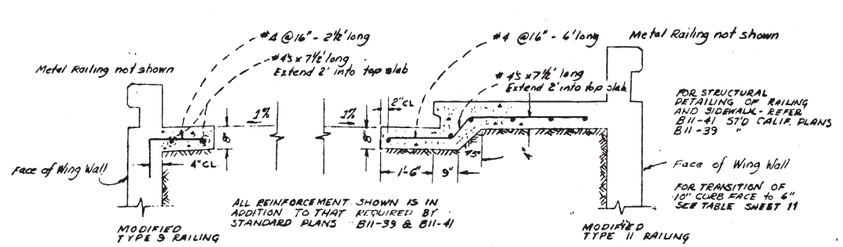

GUTTER DETAIL
SCALE: 1/2" = 1'

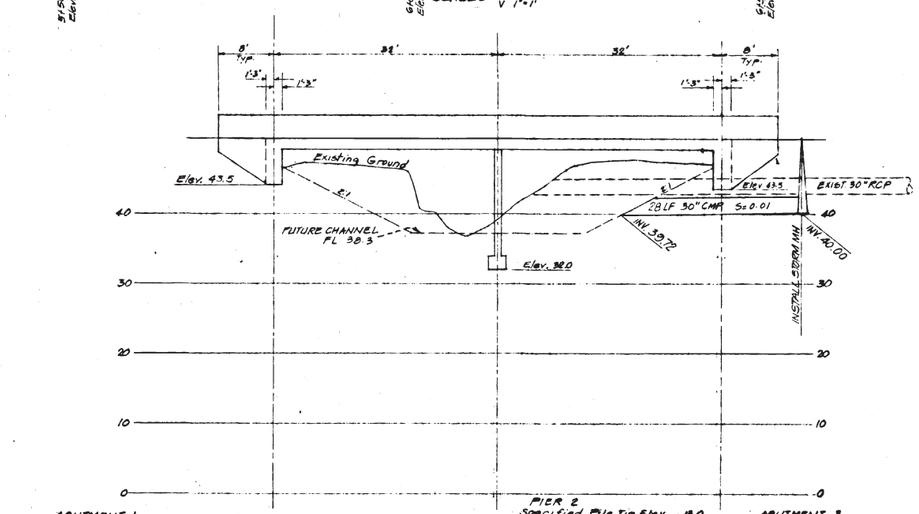

ABUTMENT 1
Specified Pile Tip Elev. = -7.0
Estimated Pile Tip Elev = -12.0

PIER 2
Specified Pile Tip Elev. = -13.0
Estimated Pile Tip Elev. = -18.0

ABUTMENT 3
Specified Pile Tip Elev = -7.0
Estimated Pile Tip Elev = -12.0

ELEVATION
SCALE: 1"=10'

STANDARD PLANS

The following sheets are included as shown in State of California Division of Highways Standard Plans dated January 1971.

B 2-1 Concrete Pile Details (See Note* Below)
B 11-39 Metal Railing Type 9
B 11-41 Metal Railing Type 11
B 11-43 Metal Railing Details - Type 9 & 11

GENERAL NOTES

Design HS 20-44 and alternative stresses
f_s = 24000 psi, f_c = 1300 psi, n = 10
Pile loading 45-ton concrete

APPROXIMATE QUANTITIES

Furnish Concrete Piling (Class II)	1055 LF
Driving Concrete Piles	20 Ea.
Metal Railing (Type 9)	80 LF
Metal Railing (Type 11)	80 LF

FINAL QUANTITIES

Concrete (Structure)	311 CY
Bar Reinforcing Steel	50,000 Lbs.

* NOTE:

Alternative "U" is deleted from Pile Options as shown on Sheet B 2-1 Concrete Pile Details.

Main Supports in falsework shall run north and south to accomodate vertical curve

APPROVED: Wesley D. Smith
FILE NUMBER: 2-325

CONFORMED

BISSELL & KARN, INC.
CIVIL ENGINEERS
2551 MERCED STREET · SAN LEANDRO, CALIFORNIA · 94577 · (415) 483-2170

AMES AVENUE BRIDGE
Constructed w/Ames Ave project

LOCAL IMPROVEMENT DISTRICT NO. 4
MILPITAS — CALIFORNIA
APPROVED: [illegible] RCE CIVIL ENGINEER NO. 9321
DATE: MAY 16, 1972 JOB NO. 5194

SCALE	DATE	DRAWN	CHECKED
AS SHOWN	3/14/72	E.I.T.	LL / R.C.

REVISIONS

SHEET NO. 27 OF 33 SHEETS

AS-BUILT

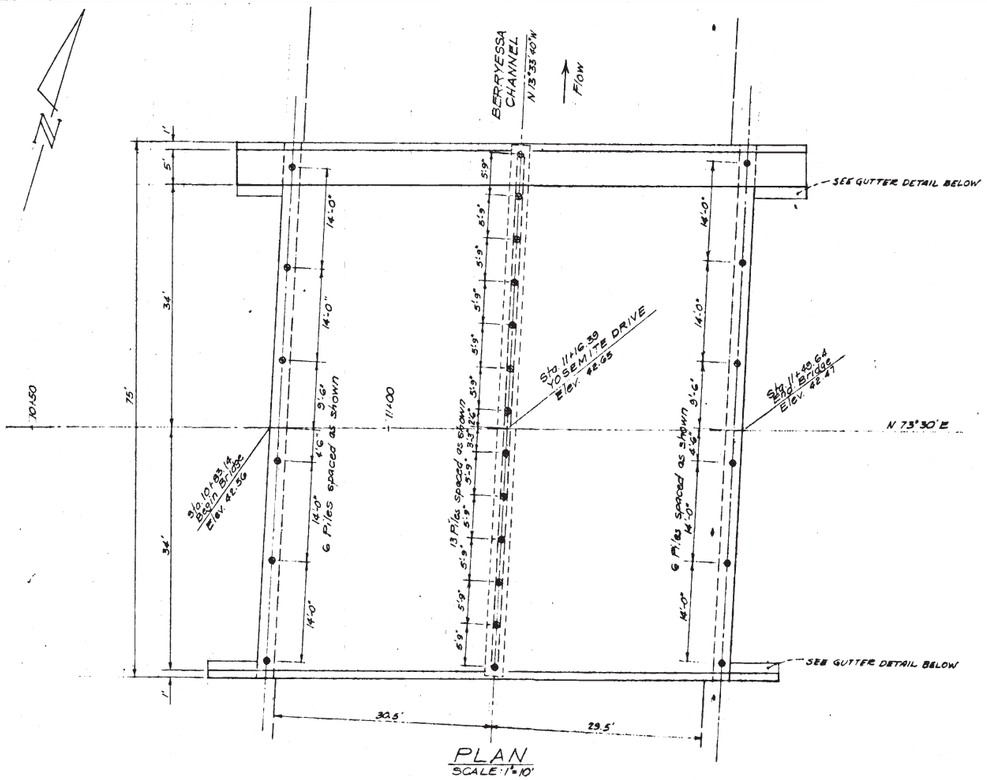

PLAN
SCALE: 1"=10'

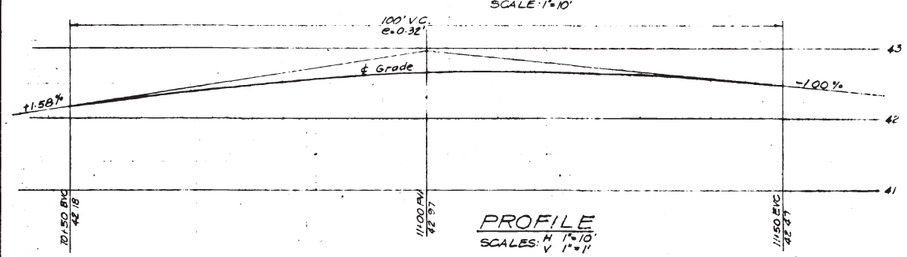

PROFILE
SCALES: H 1"=10'
V 1"=1'

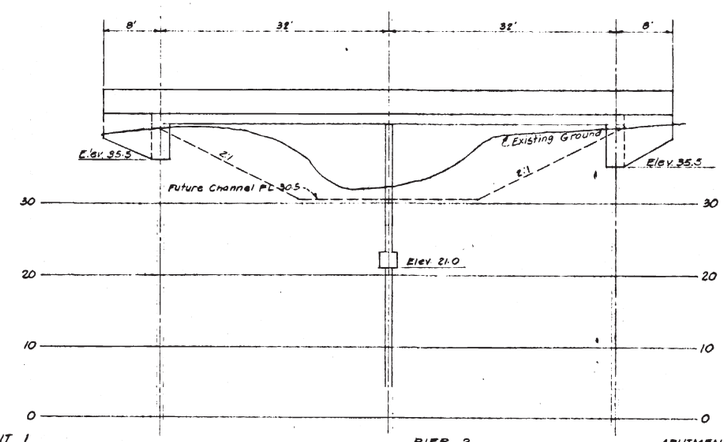

ABUTMENT 1
Specified Pile Tip Elev. = -15.0
Estimated Pile Tip Elev. = -20.0

PIER 2
Specified Pile Tip Elev. = -24.0
Estimated Pile Tip Elev. = -29.0

ABUTMENT 3
Specified Pile Tip Elev. = -15.0
Estimated Pile Tip Elev. = -20.0

ELEVATION
SCALE: 1"=10'

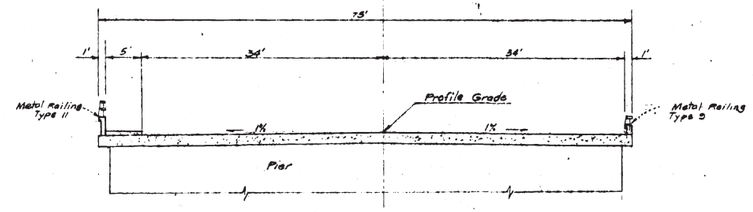

TYPICAL SECTION
SCALE: 1"=10'

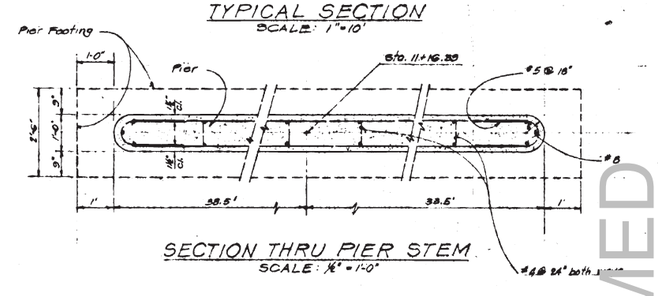

SECTION THRU PIER STEM
SCALE: 1/2" = 1'-0"

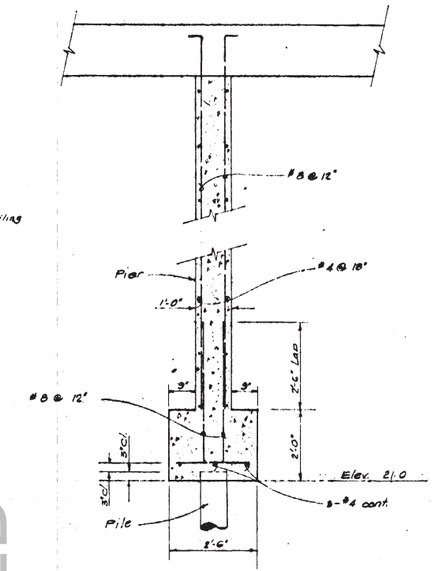

SECTION THRU PIER
SCALE: 1/2" = 1'-0"

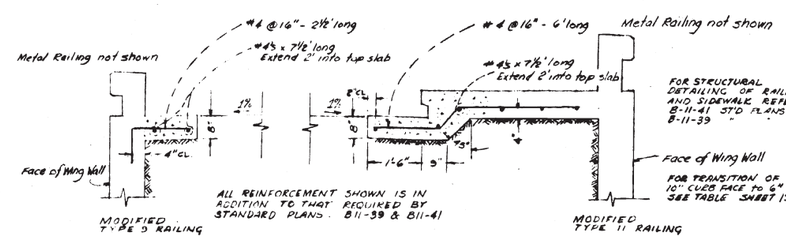

CUTTER DETAIL
SCALE: 1/2" = 1'

STANDARD PLANS

The following sheets are included as shown in State of California Division of Highways Standard Plans dated January 1971.

- B2-1 Concrete Pile Details (See Note* Below)
- B11-39 Metal Railing Type 9
- B11-41 Metal Railing Type 11
- B11-43 Metal Railing Details - Type 9 & 11

GENERAL NOTES

Design HS 20-44 and alternative stresses
f_c = 24000 psi, f_s = 1300 psi, n=10
Pile loading 45-ton concrete

APPROXIMATE QUANTITIES

Furnish Concrete Piling (Class II)	1322	LF
Driving Concrete Piles	25	EA
Metal Railing (Type 9)	80	LF
Metal Railing (Type 11)	80	LF

FINAL QUANTITIES

Concrete (Structure)	404	CY
Bar Reinforcing Steel	67,830	LBS.

*NOTE
Alternative "U" is deleted from Pile Options as shown on Sheet B2-1 Concrete Pile Details.

APPROVED: Wesley D. Smith
FILE NUMBER: 2-325

CONFORMED

BISSELL & KARN, INC.
CIVIL ENGINEERS
2551 MERCED STREET · SAN LEANDRO, CALIFORNIA · 94577 · (415) 483-2170

YOSEMITE DRIVE BRIDGE

LOCAL IMPROVEMENT DISTRICT NO 4
MILPITAS — CALIFORNIA

APPROVED: [illegible] RCE CIVIL ENGINEER NO. 9821
DATE: MAY 16, 1972 JOB NO. 5194

SCALE AS NOTED	DATE 3/16/72	DRAWN E.I.T.	CHECKED L.L./R.C.

REVISIONS

SHEET NO. 28 OF 33 SHEETS

AS-BUILT

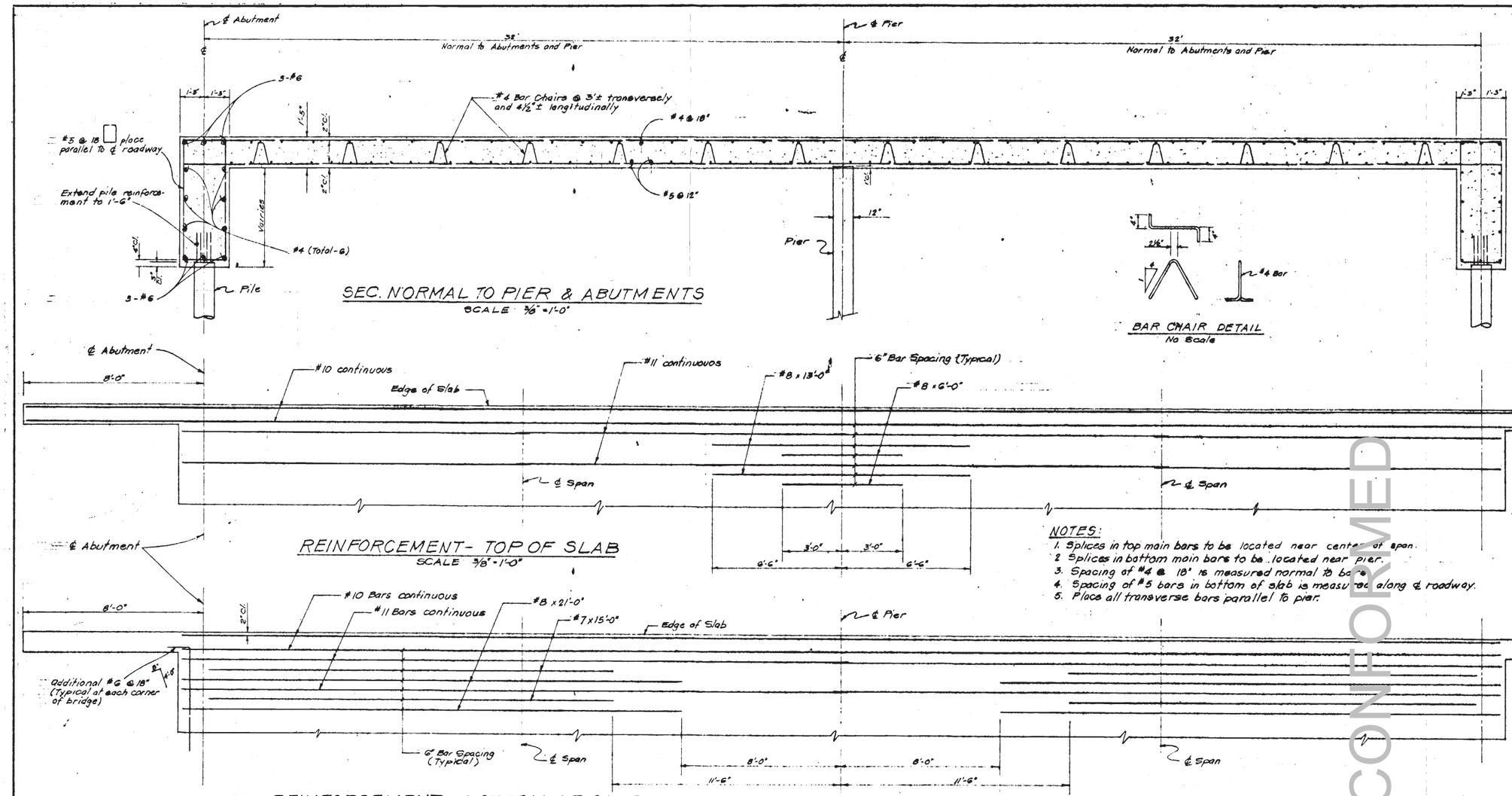

BAR CHAIR DETAIL
No Scale

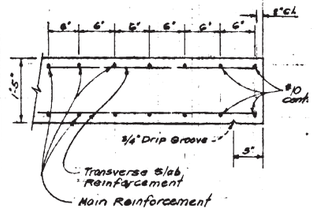

EDGE OF SLAB DETAIL
NO SCALE
(CURB & RAILING NOT SHOWN)

NOTES:
1. Splices in top main bars to be located near center of span.
2. Splices in bottom main bars to be located near pier.
3. Spacing of #4 @ 18" is measured normal to bars.
4. Spacing of #5 bars in bottom of slab is measured along ℄ roadway.
5. Place all transverse bars parallel to pier.

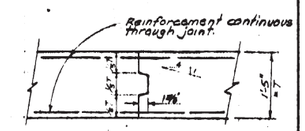

LONGITUDINAL SLAB CONST. JOINT
NO SCALE

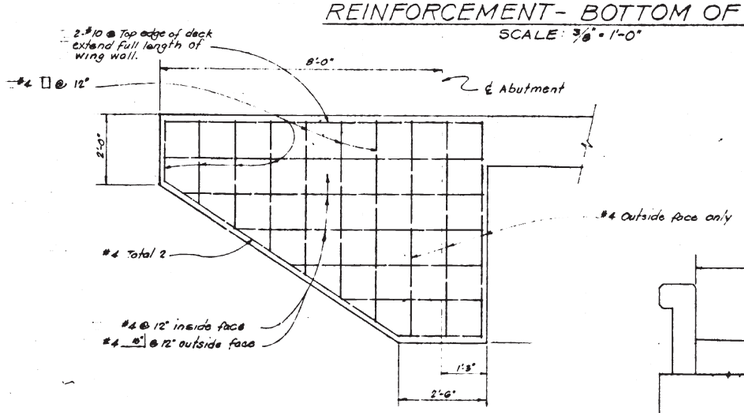

WINGWALL ELEVATION
SCALE ½"=1'-0"

BAR SPLICE LENGTH

Bar Size	#4	#5	#6	#7	#8	#9	#10	#11
Typical Bar	18"	23"	27"	32"	36"	41"	51"	57"
Top bars in main span	26"	32"	38"	45"	51"	58"	72"	80"

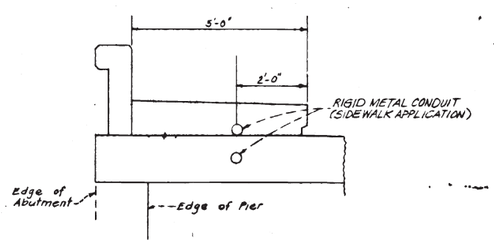

TYPICAL CONDUIT LOCATION
NOT TO SCALE

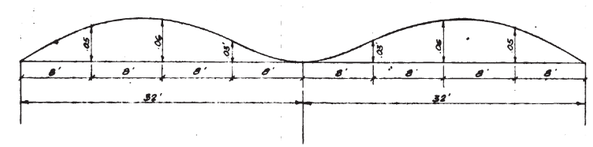

CAMBER DIAGRAM
TOTAL SLAB DEFLECTION DUE TO DEAD LOADS

Total deflection will be reached about 4 years after falsework removal. For values at time of falsework removal divide those shown by 4.
The amount of camber for construction will be determined by the Engineer.

CONFORMED

APPROVED: Wesley D. Smith
FILE NUMBER: C-325

BISSELL & KARN, INC.
CIVIL ENGINEERS
2551 MERCED STREET · SAN LEANDRO, CALIFORNIA · 94577 · (415) 483-2170

GENERAL BRIDGE DETAIL

LOCAL IMPROVEMENT DISTRICT NO. 4
MILPITAS — CALIFORNIA
APPROVED: [signature] REG. CIVIL ENGINEER NO. 9221
DATE: MAY 16, 1972 JOB NO. 5194

SCALE	DATE	DRAWN	CHECKED
AS NOTED	3/14/72	E.I.T.	LL/R.C.

REVISIONS

SHEET NO. 29 OF 93 SHEETS

AS-BUILT

AS-BUILT

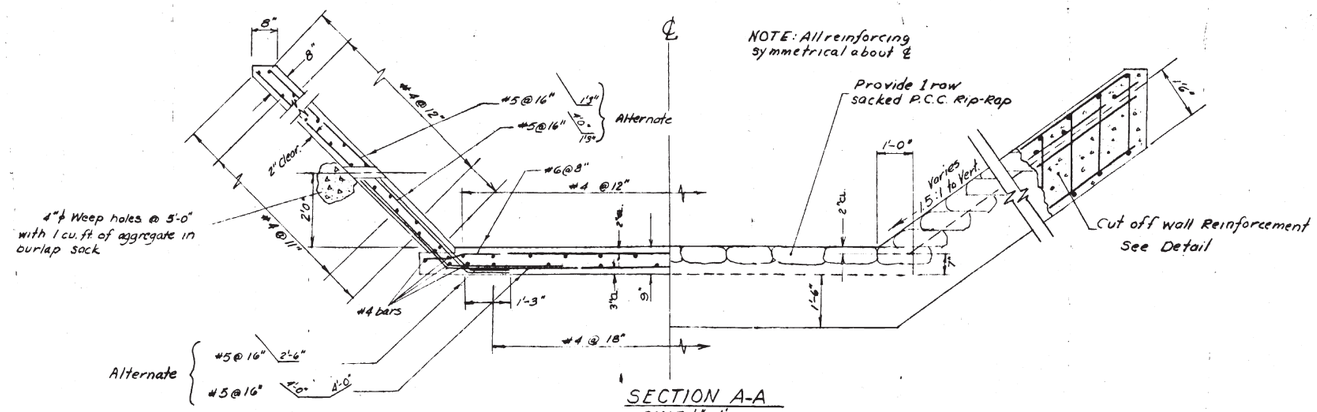

SECTION A-A
SCALE: 1/2" = 1'

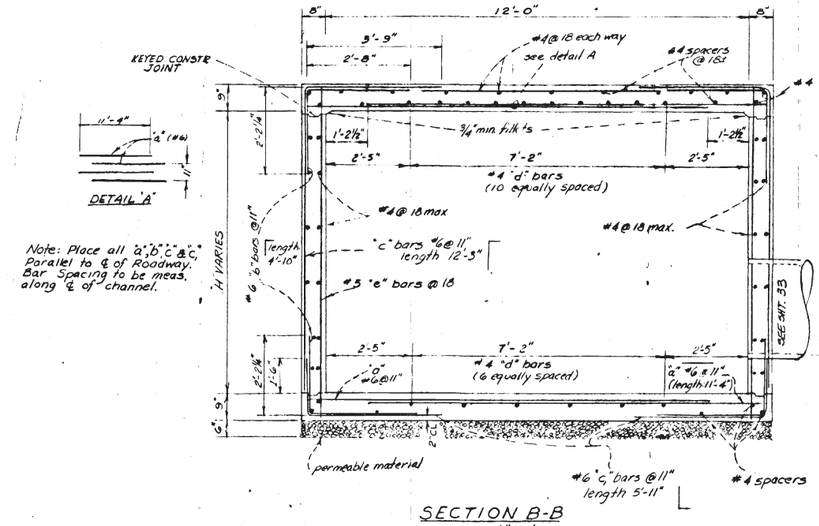

Note: Place all "a", "b", "c" & "e" Parallel to ℄ of Roadway. Bar Spacing to be meas. along ℄ of channel.

SECTION B-B
SCALE: 1/2" = 1'

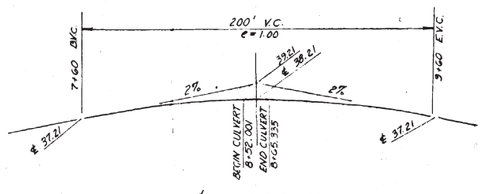

℄ PROFILE
"A" STREET
NO SCALE

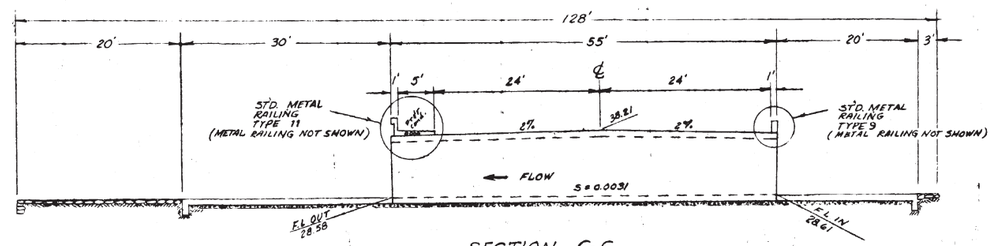

SECTION C-C
SCALE: 1" = 10'

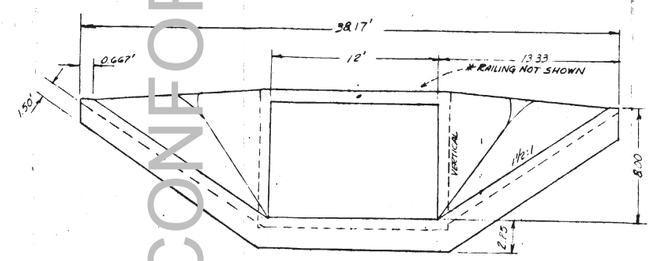

SECTION D-D
SCALE: 1" = 5'

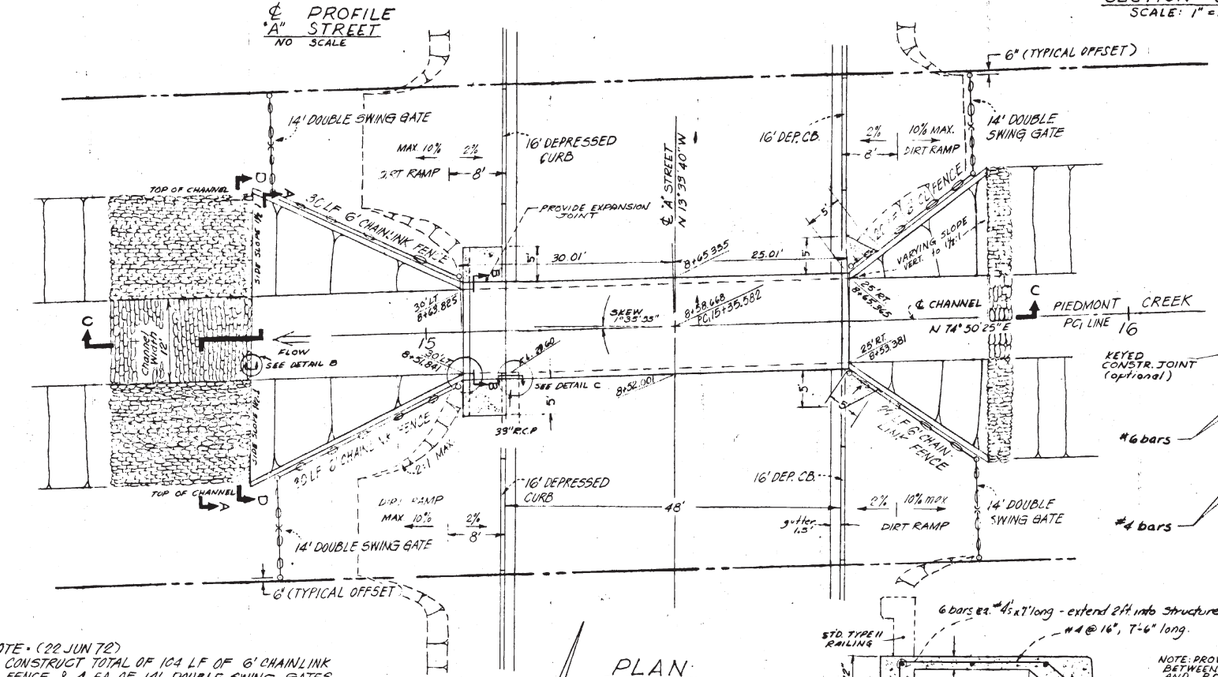

PLAN
SCALE 1" = 10'

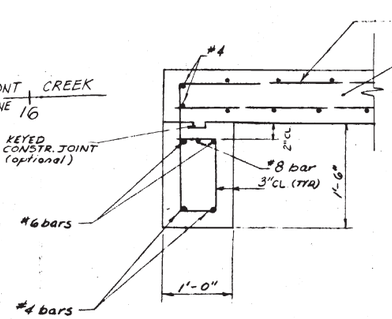

DETAIL B
SCALE 1" = 1'-0"
CUT OFF WALL

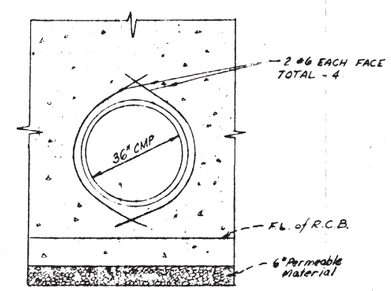

DETAIL C
SCALE 1/2" = 1'

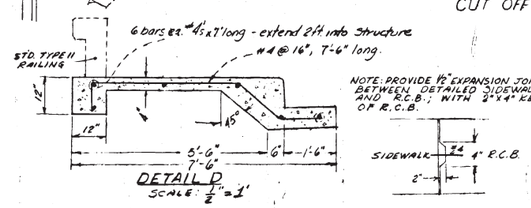

NOTE: PROVIDE 1/2" EXPANSION JOINT MATERIAL BETWEEN DETAILED SIDEWALK @ LEFT AND R.C.B.; WITH 2"x4" KEY @ FACE OF R.C.B.

DETAIL D
SCALE: 1/2" = 1'

NOTE: (22 JUN 72)
CONSTRUCT TOTAL OF 104 LF OF 6' CHAINLINK FENCE & 4 EA OF 14' DOUBLE SWING GATES.

CONSTRUCT 4 EA 16' DEPRESSED CURBS & 4 EA GRADED DIRT RAMPS AS SHOWN.

NOTE: REFER CALIFORNIA STANDARD PLANS P93 "116-117 Jan. '71 Edition
- Metal Railing (Type 9) ..... 14 LF
- Metal Railing (Type 11) ..... 14 LF

R.C.B.
APPROXIMATE QUANTITIES

FINAL QUANTITIES
- Concrete Structure ..... 68 C.Y.
- Bar Reinforcing Steel ..... 13,630 LB
- Permeable Material ..... 12 C.Y.

CHANNEL
APPROXIMATE QUANTITIES
- Sacked P.C.C. ..... 24 C.Y.

FINAL QUANTITIES
- * Concrete Structure ..... 55.8 C.Y.
- Bar Reinforcing Steel ..... 9,700 LB
- Permeable Material ..... 14 C.Y.

* Includes slope protection & additional sidewalk as shown

Note: The Final R.C.B. Quantities include railing and sidewalk over the structure

APPROVED: [signature]
FILE NUMBER: 2-325

CONFORMED

BISSELL & KARN, INC.
CIVIL ENGINEERS
2551 MERCED STREET · SAN LEANDRO, CALIFORNIA · 94577 · (415) · 483-2170

SINGLE REINF. CONCRETE BOX CULVERT

LOCAL IMPROVEMENT DISTRICT NO. 4
MILPITAS — CALIFORNIA

APPROVED: [signature] REG. CIVIL ENGINEER NO. 3821
DATE: MAY 16, 1972 JOB NO. 5194

SCALE	DATE	DRAWN	CHECKED
AS NOTED		M.T.S.	R.J.C.

REVISIONS: 22 JUN 72 - 4 W.L.

SHEET NO. 30 OF 33 SHEETS

AS-BUILT

AS-BUILT

UP Folder No.: 02967-19

CHANNEL IMPROVEMENT
CONSTRUCTION & MAINTENANCE AGREEMENT

Mile Post: 10.7 to 11.7, Opposite Railroad's Milpitas Industrial Lead
Location: Milpitas, Santa Clara County, California

THIS CHANNEL IMPROVEMENT CONSTRUCTION & MAINTENANCE AGREEMENT (this "**Agreement**") is made and entered into as of the 27th day of May, 2016 (the "**Effective Date**") by and among **UNION PACIFIC RAILROAD COMPANY**, a Delaware corporation, ("**Railroad**"), **STANDARD REALTY AND DEVELOPMENT COMPANY**, a California corporation ("**Standard**") and **SANTA CLARA VALLEY WATER DISTRICT**, a special district created by the California legislature (the "**District**").

RECITALS:

A. Standard is a wholly owned subsidiary of Railroad.

B. In connection with the District's Berryessa Creek Flood Risk Management Project, the District desires to construct and maintain certain channel improvements (the "**Project**") in the area generally located between East Calavares Boulevard and Montague Expressway in Milpitas, Santa Clara County, California, at or near Railroad's Mile Post 10.7 to Mile Post 11.7 opposite Railroad's Milpitas Industrial Lead, as such Project area is generally depicted on the print marked **Exhibit "A"** attached hereto (the "**Project Area**").

C. Pursuant to that certain (i) Grant of Easement dated November 2, 1978, between Standard and the District and (ii) Grant of Easement dated November 21, 1978, between Standard and the District (collectively, the "**Existing Standard Easement Deeds**"), the District has an easement (the "**Existing Standard Easement**") in, upon, over and across certain property located within the Project Area and owned by Standard for the purposes of flood control and/or storm water drainage, as such property is more particularly described in the Existing Standard Easement Deeds (the "**Existing Standard Easement Property**").

D. Pursuant to that certain (i) Deed dated April 7, 1955, among Francis L. Wrigley and Beatrice C. Wrigley, as predecessors in interest to Railroad, and the District and (ii) Deed dated March 15, 1955, between The Western Pacific Railroad Company, as predecessor in interest to Railroad, and the District (collectively, the "**Existing Railroad Easement Deeds**" and together with the Existing Standard Easement Deeds, collectively, the "**Existing Easement Deeds**"), the District has an easement (the "**Existing Railroad Easement**" and together with the Existing Standard Easement, collectively, the "**Existing Easements**") allowing certain uses along and across certain property located within the Project Area and owned by Railroad, as such property is more particularly described in the Existing Railroad Easement Deeds (the "**Existing**

CONFORMED

Railroad Easement Property" and together with the Existing Standard Easement Property, the "**Existing Easement Property**").

E. In addition to the Existing Easements and in connection with the Project, the District desires new easement rights on, over and across certain real property located within the Project Area and owned by either Standard or Railroad (collectively, the "**New Easement Property**" and together with the Existing Easement Property, the "**Easement Property**").

F. The District also desires that the United States Army Corps of Engineers ("**USACE**") be a permitted user of certain of the Districts rights to use the Easement Property.

G. Railroad is a "rail carrier" (as defined in 49 U.S.C. §10102(5) under the Interstate Commerce Commission Termination Act of 1995).

I. As part of the Project, certain improvements/replacements are being made to Railroad's (i) Piedmont Bridge (the "**Piedmont Structure**") at the location generally depicted on the print attached hereto as **Exhibit "A-1-X"** and (ii) trestle bridge (the "**Trestle Structure**") at the location generally depicted on the print attached hereto as **Exhibit "A-1-Y"**.

J. Pursuant to the terms and conditions of this Agreement, Standard and Railroad, as applicable, are agreeable to grant the District easement and temporary license rights on, over and across the New Easement Property and Temporary License Area (defined below), respectively, for the purposes set forth in Article 1 below and to amend and restate the Existing Easement Deeds in their entirety, such that the Existing Easement Deeds will be subject to this Agreement and the terms and conditions of the form of amended and restated deed described herein, to update and accurately reflect the purposes of said deeds in connection with the Project.

AGREEMENT:

NOW, THEREFORE, IT IS AGREED by and between the parties hereto as follows:

Article 1. **GRANT OF EASEMENTS AND TEMPORARY LICENSE.**

A. For and in consideration of Four Hundred Twenty-Five Thousand Seven Hundred-Seventy and 10/100 Dollars ($425,770.10) to be paid by the District to Railroad upon the execution of this Agreement, and in further consideration of the District's agreement to perform and comply with the terms of this Agreement, Railroad, as of the Effective Date, shall execute and deliver to District, and District shall accept, a channel improvement easement deed in the form marked **Exhibit "F"**, attached hereto, granting the District a non-exclusive, perpetual and assignable rights and easements on, over and across a portion of Railroad's real property shown and described on **Exhibit "A-2"**, attached hereto for the limited purposes of: (i) constructing, operating and maintaining channel improvement works, (ii) constructing, maintaining and using an access road in accordance with the Plans (defined below), (iii) clearing, cutting, felling, removing and disposing of timber, trees, underbrush, buildings and/or other improvements from such real property that impede or obstruct the flow of flood waters, and (iv) excavating, dredging, cutting away and removing land and placing dredge or spoil material on

CONFORMED

such real property in accordance with the Plans and for no other purpose; in each case reserving, however, to Railroad and its successors and assigns, all such rights and privileges in the real property as may be used without interfering with or abridging the rights and easements contemplated hereunder.

B. For and in consideration of Forty-Four Thousand Five Hundred Fifty-Six and 92/100 Dollars ($44,556.92) to be paid by the District to Standard upon the execution of this Agreement, and in further consideration of the District's agreement to perform and comply with the terms of this Agreement, Standard, as of the Effective Date, shall execute and deliver to District, and District shall accept, channel improvement easement deeds in the form marked **Exhibit "F"**, attached hereto, granting the District a non-exclusive, perpetual and assignable rights and easements on, over and across a portion of Standard's real property shown and described on **Exhibit "A-3"** (East Calaveras Boulevard), **Exhibit "A-4"** (Los Coches Street), **Exhibit "A-5"** (Yosemite Drive), **Exhibit "A-6"** (APN No. 086-30-028) and **Exhibit "A-7"** (Montague Expressway), respectively, attached hereto for the limited purposes of: (i) constructing, operating and maintaining channel improvement works, (ii) with respect to the real property described on **Exhibit "A-6"** only, constructing, maintaining and using an access road in accordance with the Plans (defined below), (iii) clearing, cutting, felling, removing and disposing of timber, trees, underbrush, buildings and/or other improvements from such real property that impede or obstruct the flow of flood waters, and (iv) excavating, dredging, cutting away and removing land and placing dredge or spoil material on such real property in accordance with the Plans and for no other purpose; in each case reserving, however, to Standard and its successors and assigns, all such rights and privileges in the real property as may be used without interfering with or abridging the rights and easements contemplated hereunder.

C. For good and valuable consideration, the receipt and sufficiency of which are hereby acknowledged, and in further consideration of the District's agreement to perform and comply with the terms of this Agreement, Standard agrees to grant to the District and the District thereby agrees to accept a non-exclusive, revocable license (the "**License**") to enter upon the property depicted on **Exhibit "A-8"** (the "**Temporary License Area**"**),** for the sole purpose of performing the grading work required to be performed in connection with the Project Work (defined below), and as shall be more particularly shown on the Plans. The District's use of the License shall be subject to this Agreement. The License shall commence on the Effective Date and shall automatically terminate on the earlier to occur of (i) completion of such grading work and (ii) eighteen (18) months after the Effective Date.

D. For good and valuable consideration, the receipt of which is hereby acknowledged, and in further consideration of the District's agreement to perform and comply with terms of this Agreement, Railroad, as of the Effective Date, shall execute and deliver to the District, and the District shall accept, an amended and restated easement deed in the form marked **Exhibit "G"**, attached hereto, amending and restating each of the Existing Railroad Easement Deeds in their entirety.

E. For good and valuable consideration, the receipt of which is hereby acknowledged, and in further consideration of the District's agreement to perform and comply with terms of this Agreement, Standard, as of the Effective Date, shall execute and deliver to the

CONFORMED

District, and the District shall accept, an amended and restated easement deed in the form marked **Exhibit "G"**, attached hereto, amending and restating each of the Existing Standard Easement Deeds in their entirety.

F. For the avoidance of doubt and without limiting any provisions contained in this Agreement, the District shall obtain (and shall be responsible for obtaining on behalf of USACE and/or any Contractor) prior approval from Railroad, which approval shall not be unreasonably withheld, before commencing any Project Work or, except as expressly provided herein, the performance of any activity or work in which any person or equipment will be within twenty-five (25) feet of any Railroad track or other Railroad facilities, as required in Exhibit B, Section 5 of this Agreement.

G. The District shall not permit any cut vegetation or cleared debris to be abandoned in place or dumped on the Easement Property or other property of Railroad or Standard.

H. The District shall not permit the Easement Property to be used for any type of recreational road, path, trail, or any access of any kind by members of the public.

Article 2. PROJECT WORK; DISTRICT TO BEAR ENTIRE EXPENSE AND WORK RESPONSIBILITY.

A. Except as limited in this Section, any Project work performed in connection with this Agreement is collectively referred to herein as the "**Project Work**". The parties acknowledge and agree that any Project Work to be performed in connection with the initial construction of the Project, without regard to whether such work is performed on the Easement Property, Temporary License Area or in the vicinity of Railroad's operations and facilities, shall be subject to the terms and conditions of this Agreement. After the District completes the Project Work related to the initial construction of the Project in accordance with the Plans (and UP has reviewed and approved the same), the term "Project Work" shall only apply to any Project improvements installed (at any time) on the Easement Property, and the District's rights and obligations under this Agreement shall be limited to those that arise from or are related to the rights granted to the District in the Easement Property. Notwithstanding the foregoing, the District shall remain responsible after completion of the Project Work in accordance with the Plans (and UP has reviewed and approved the same) for any obligations or liabilities related to (i) any Project Work improvements installed outside of the Easement Property that accrue prior to UP's review and approval of the same and (ii) the Deferred Construction obligations included in Article 4 below.

B. Railroad has no duty or obligation to construct, reconstruct, inspect, maintain, repair, renew, or operate the Project improvements or perform any Project Work. The District shall bear the sole and entire responsibility to perform all necessary and appropriate Project Work. Project Work does not include Railroad Work (as defined below).

C. Railroad has no duty or obligation to contribute money, labor or other resources towards the construction, reconstruction, inspection, maintenance, repair, renewal or operation of the Project improvements or any Project Work. Unless otherwise provided herein, the District

CONFORMED

shall bear the entire cost and expense incurred in connection with the Project and all Project Work, along with all Reimbursable Costs (as defined below).

D. At the District's sole expense, Railroad agrees to perform track replacement and certain road work (the "**Railroad Work**") in connection with District's performance of the Project Work (as more particularly described in the Estimate (defined below)).

E. The District agrees to pay Railroad all actual costs and expenses incurred by Railroad in connection with the Railroad Work (the "**Reimbursable Costs**"), including without limitation, any and all actual costs and expenses in connection with the labor, materials, supplies, transportation, insurance and direct and indirect overhead charges (including standard additive rates) properly allocable to the Project, supervision, engineering review, inspection, flagging and other protective services, surveys, permits, and rental of tools, equipment and machinery, together with any other items of expense incurred by Railroad in performing the Railroad Work. The standard additive rates shall be subject to upward or downward adjustment based on industry standards and practices, and the District acknowledges and agrees that any such adjustment to standard additive rates may be made retroactively. Notwithstanding any provision contained herein to the contrary, any and all costs associated with reinstalling tracks on the Piedmont Structure by Railroad shall be at the sole cost and expense of Railroad and shall not be deemed a Reimbursable Cost (it being understood, for the avoidance of doubt, that the District will be responsible for all other work (and expenses) relating to the replacement of the Piedmont Structure as will be set forth in the Plans).

F. The District shall pay all invoices submitted by Railroad for Reimbursable Costs within sixty (60) days after the District's receipt of billing from Railroad. If the District disputes any portion of the invoiced costs, District's time to make such payments shall be tolled (with respect only to the disputed portion) while any judicial proceeding or alternative dispute resolution procedure agreed to by the parties is pending. Railroad agrees to provide as much supporting documentation as is customarily provided by Railroad for projects of this type.

G. The Railroad Work to be performed by Railroad in connection with the Project is described on Railroad's Material Force Account Estimate dated May 20, 2016 and corresponding summary estimate on **Exhibit "H"** attached hereto (collectively, the "**Estimate**").

H. Railroad, if it so elects, may recalculate and update the Estimate in the event the Project and the work contemplated thereunder to be performed in connection with the Project does not commence within six (6) months after the date of the Estimate. The District acknowledges that the Estimate may not include any estimate of flagging or other protective service costs that are to be paid by the District or the Contractor (defined below) in connection with flagging or other protective services provided by Railroad in connection with the Project. All of such costs incurred by Railroad are to be paid by the District or the Contractor as determined by Railroad and the District. If it is determined that Railroad will be billing the Contractor directly for such costs, the District agrees that it will pay Railroad for any flagging costs that have not been paid by the Contractor within thirty (30) days after the Contractor's receipt of billing.

CONFORMED

Article 3. **TERMS, CONDITIONS, AND EXHIBITS.**

A. Exhibits "A", "A-1", "A-2", "A-3", "A-4", "A-5", "A-6", "A-7", "A-8", "B", C", "D", "E", "F", "G" and "H" attached hereto, are hereby made a part of this Agreement.

1) Exhibit "A" is a print showing the Project Area.
2) Exhibit "A-1-X" is a print showing the general location of the Piedmont Structure.
3) Exhibit "A-1-Y" is a print showing the general location of the Trestle Structure.
4) Exhibit "A-2" is a print showing the Railroad Easement Area (APN Nos. 086-32-021 and 086-32-028).
5) Exhibit "A-3" is a print showing the Standard Easement Area (East Calaveras Boulevard).
6) Exhibit "A-4" is a print showing the Standard Easement Area (Los Coches Street).
7) Exhibit "A-5" is a print showing the Standard Easement Area (Yosemite Drive).
8) Exhibit "A-6" is a print showing the Standard Easement Area (APN No. 086-30-028).
9) Exhibit "A-7" is a print showing the Standard Easement Area (Montague Expressway).
10) Exhibit "A-8" is a print showing the Temporary License Area
11) Exhibit "B" are additional terms and conditions.
12) Exhibit "C" is Railroad's current form of Contractor's Right of Entry Agreement.
13) Exhibit "D" are insurance requirements.
14) Exhibit "E" are special safety requirements.
15) Exhibit "F" is a form of Easement Deed.
16) Exhibit "G" is a form of Amended and Restated Easement Deed.
17) Exhibit "H" is the Estimate.

B. District's use of the Easement Property and Temporary License Area is subject to District's compliance with each and all of the terms and conditions set forth in this Agreement.

Article 4. **DEFERRED CONSTRUCTION.**

The District acknowledge that conditions associated with the Project or Project Work may cause the complete stabilization (seasoning) of Railroad's track and related facilities to be deferred beyond the time of the Project or work associated therewith, and that Railroad's operations over track and related facilities in the vicinity of the Project during seasoning periods will impose extraordinary maintenance costs, in the event of caving, sliding, slipping, sinking, failure, deterioration, consolidation or settling of track or related facilities, including without limitation damage to embankments, subgrade, roadbed, rip-rapping, and track alignment, as well as failure, deterioration, settlement and consolidation of tracks or ballast, until a seasoning period is complete. Therefore, the District will pay to Railroad, as a part of the consideration for this Agreement, all actual costs of extraordinary maintenance (hereinafter referred to as **"Deferred Construction**") associated with the Project and Project Work, and attributed to caving, sliding, slipping, sinking, failure, deterioration, consolidation or settling of track or related railroad facilities in the vicinity of the Project Work which occurs during the time period commencing

CONFORMED

immediately following completion of the Project Work and ending two (2) years thereafter, whether completed by Railroad or Railroad's contractor. Railroad's costs of Deferred Construction which the District shall reimburse are the extra actual costs, in excess of normal maintenance costs, of maintaining track and related facilities in accordance with Railroad's standards or American Railway Engineering and Maintenance of Way Association ("**AREMA**") standards, and will include, without limitation, the costs of aligning and surfacing rail and adding ballast and other stabilizing materials. As a condition of reimbursement, Railroad shall provide the District with thirty days' advance written notice prior to commencing such work and shall provide an estimate of the anticipated costs, unless in the event of any emergency in which case Railroad shall provide such notice as soon as is reasonably practicable under the circumstances.

Article 5. **TERM; TERMINATION.**

A. This Agreement shall commence on the Effective Date and, unless sooner terminated as set forth in Paragraphs (B) and (C) below, shall continue in full force and effect as long as the Project improvements remain on the Easement Property.

B. If the District defaults in the performance of any material term or condition herein stated for a period of sixty (60) days after written notice to cure is given by the Railroad and/or Standard to the District specifying such default, the Railroad and Standard may, at their option, terminate this Agreement upon a final judicial determination of District's breach of this Agreement and, with respect to any such judicial determination relating to the New Easement Property, terminate the Easement Deed related thereto (provided, for the avoidance of doubt, that such express termination right for the New Easement Property shall not construed to limit the Railroad's or Standard's rights and remedies available to it under applicable law to enforce any defaults with respect to the Existing Railroad Easement Deeds or Existing Standard Easement Deeds).

C. If the Project Work is not substantially completed on the Easement Property within three (3) years after the Effective Date, the Railroad may, at its option, forthwith and immediately terminate its obligations under this Agreement by providing ninety (90) days prior written notice to the District. Exercise of this termination provision shall not, by itself, terminate District's property rights to the New Easement Property. Upon written request of District, Railroad shall meet with District within sixty (60) days to discuss alternative solutions for Railroad to perform its obligations under this Agreement, but such performance shall be in the Railroad's sole and absolute discretion, and the Railroad shall be under no legal obligation to ultimately perform such obligations.

D. In the event this Agreement is terminated pursuant to section B above, then at the option of Railroad and Standard, the District may be required to promptly cause the Project improvements to be removed from the Easement Property and the Easement Property restored to AREMA and Railroad's standards, or to the condition they were in as of the Effective Date, in each case to the satisfaction of the Railroad. If the District fails to promptly cause performance of such removal and restoration, Railroad may elect to cause the removal and restoration, at the District's sole expense.

CONFORMED

E. Termination of this Agreement shall not affect any of the rights or obligations of the parties hereto which may have accrued, or liabilities, accrued or otherwise, which may have arisen prior thereto.

Article 6. DEFINITION OF THE DISTRICT AND CONTRACTOR.

A. For purposes of this Agreement, all references in this Agreement to the term "District" shall also include the District's contractors, and the subcontractors of such contractors, and its or their officers, agents and employees, and others acting under its or their authority.

B. For purposes of this Agreement, the term "Contractor" shall mean the independent contractor or independent contractors hired by the District or USACE to perform any Project Work on any portion of Project Area during initial construction of the Project (including the Easement Property and Temporary License Area), and shall also include the Contractor's subcontractors and the Contractor's and subcontractor's respective employees, officers and agents, and others acting under its or their authority. Following initial construction of the Project, this definition shall only apply to work performed on the Easement Property.

Article 7. CONTRACTOR.

A. Railroad and Standard hereby consent to permitting a Contractor (whether hired by the District or USACE) to perform the Project Work and allowing such Contractor onto the Easement Property and Temporary License Area, provided that prior to any Contractor entering onto either Standard's or Railroad's property, the District shall require each Contractor to:

1) execute with Railroad the Railroad's then current form of Contractor's Right of Entry Agreement;
2) obtain the insurance required in such Contractor's Right of Entry Agreement; and
3) provide such insurance policies, certificates, binders and/or endorsements to Railroad.

B. Railroad's current form of Contractor's Right of Entry Agreement is marked **Exhibit "C"** and attached to this Agreement. The District confirms that it will inform each Contractor (for avoidance of doubt, including without limitation, a Contractor hired by USACE, but excluding any employees of the District), and shall inform USACE, as applicable, that it shall require its respective Contractor, to execute such agreement and obtain the required insurance before entering on, or commencing any Project Work on either Standard's or Railroad's property. Under no circumstances will the Contractor be allowed on any property owned by Standard or Railroad without first executing the Contractor's Right of Entry Agreement and obtaining the insurance required therein and also providing to the Railroad the insurance policies, binders, certificates and/or endorsements described therein.

CONFORMED

C. All insurance correspondence, binders, policies, certificates and/or endorsements shall be sent to:

Union Pacific Railroad Company
Real Estate Department
1400 Douglas Street, Mail Stop 1690
Omaha, NE 68179-1690
Attn: UPRR Folder No. 02967-19

Article 8. USACE USE OF PREMISES.

A. Subject to conditions of this Agreement, Railroad and Standard, as applicable, hereby consent to the District permitting USACE to access the Easement Property as follows: (i) during the initial construction of the Project to monitor and supervise such construction performed pursuant to construction contracts awarded by USACE, (ii) after initial construction is completed, as required by USACE to comply with its generally applicable inspection obligations, to access the Easement Property to inspect the Project, and (iii) after initial construction is completed, in the event the District fails to timely perform its obligations to USACE (or as otherwise set forth herein) with respect to the Project, USACE (or its construction contractor) shall have the right to maintain, repair, renew, use, and operate the improvements installed on the Easement Property in connection with the Project and to otherwise satisfy the District's obligations herein.

B. Notwithstanding Railroad and Standard permitting USACE or any Contractor (including any USACE contractor) to perform any activities or work as set forth herein on the Easement Property or Temporary License Area, the District shall remain responsible for, and shall not be released from, its obligations under this Agreement, including but not limited to, any obligations related to USACE's and/or any Contractor's use of, or exercise of rights related to, the Easement Property or Temporary License Area.

C. It is understood by all parties to this Agreement that any and all communications with USACE Contractors shall be done through the USACE representatives identified in a written notice to be delivered to the District and Railroad by USACE.

Article 9. NO CONSENT OR PERMISSION TO CROSS TRACK.

This Agreement and any Railroad consent or permission stated herein does not permit the District, USACE and/or any Contractor to (A) cross any of Railroad's tracks (except at existing open public crossings) with vehicles, equipment, or machinery to access the Project Area; or (B) access or use any portion of Railroad's property or Standard's property other than the Easement Property or Temporary License Area. City, USACE and/or a Contractor shall be required to obtain a separate written crossing agreement directly with Railroad before crossing any such tracks with vehicles, equipment or machinery to perform the Project Work or to access the Project Area.

CONFORMED

Article 10. DOCUMENT PREPARATION FEE.

The District shall pay upon the execution and return of this Agreement, the nonrefundable sum of Twenty-Five Thousand and No/100 Dollars ($25,000.00) to cover Railroad's costs to prepare this Agreement.

Article 11. NO ADMISSION.

The parties are currently in a lease dispute involving property rights and/or facilities of the District commonly referred to as the Blue Hills pipeline (Railroad Folder No. 1608-75), together with any other disputes related thereto, collectively, the "Blue Hills Dispute." The parties agree that neither the settlement of the Blue Hills Dispute nor any provision of this Agreement shall be used or construed as precedent, a waiver of any argument, course of dealing between the parties, or admission of liability or wrongdoing against either party for any purpose (including without limitation, the valuation of any real estate interests involved in the Blue Hills Dispute or being granted herein). The parties also agree that this Agreement may not be submitted or used as evidence in any action or other proceeding for any purpose except in an action or proceeding to enforce or interpret the terms of this Agreement.

Article 12. MODIFICATION – ENTIRE AGREEMENT.

No waiver, modification or amendment of this Agreement shall be of any force or effect unless made in writing, signed by the District, Railroad and Standard and specifying with particularity the nature and extent of such waiver, modification or amendment. Any waiver by a party of any default by another party shall not affect or impair any right arising from any subsequent default. This Agreement (including the exhibits attached hereto and made a part hereof) constitutes the entire understanding between the District, Railroad and Standard with respect to the Project Work and cancels and supersedes any prior negotiations, understandings or agreements, whether written or oral with respect thereto.

Article 13. CHOICE OF LAW

This Agreement shall in all respects be interpreted, enforced, and governed by and under the laws of the State of California.

(Remainder of Page Intentionally Left Blank)

CONFORMED

IN WITNESS WHEREOF, the parties hereto have caused this Agreement to be executed effective as of the Effective Date.

UNION PACIFIC RAILROAD COMPANY, a Delaware corporation

By: _____
Renay J. Robison, Director – Real Estate

STANDARD REALTY AND DEVELOPMENT COMPANY, a California corporation

By: _____
Tony K. Love, Chairman and CEO

SANTA CLARA VALLEY WATER DISTRICT, a special district created by the California legislature

By: _____
Name: Norma J. Camacho
Title: Interim CEO

ATTEST: MICHELE L. KING, CMC

_____
Clerk/Board of Directors

CONFORMED

EXHIBIT A

TO CHANNEL IMPROVEMENT CONSTRUCTION & MAINTENANCE AGREEMENT

Project Area Print

(see attached)

CONFORMED

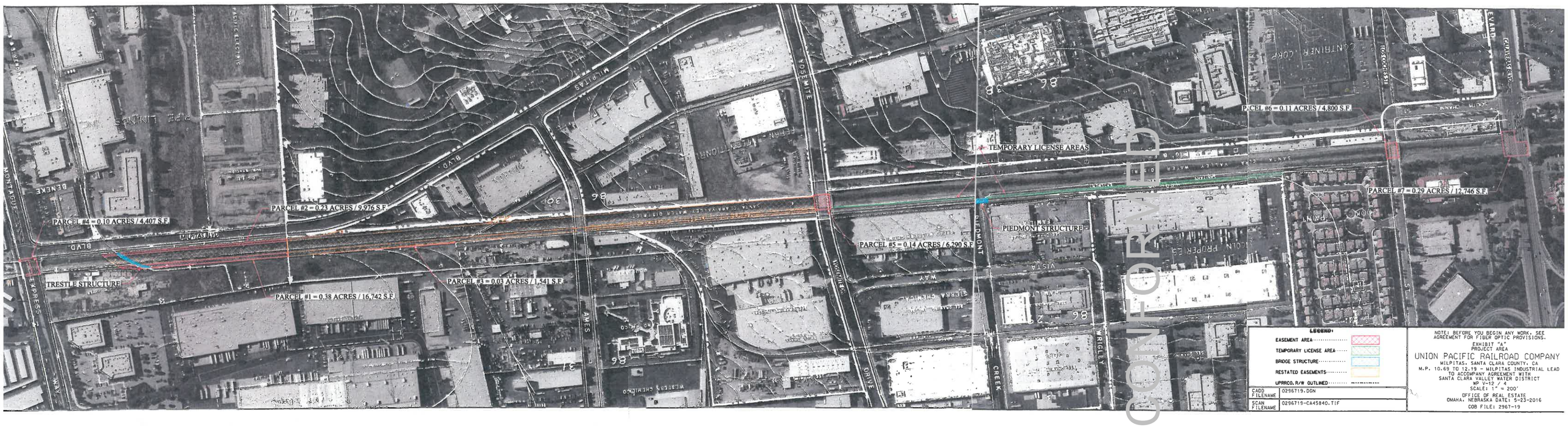
PARCEL #4 = 0.10 ACRES / 4,407 S.F.
PARCEL #2 = 0.23 ACRES / 9,976 S.F.
PARCEL #1 = 0.38 ACRES / 16,742 S.F.
PARCEL #3 = 0.03 ACRES / 1,541 S.F.
PARCEL #5 = 0.14 ACRES / 6,290 S.F.
PARCEL #6 = 0.11 ACRES / 4,800 S.F.
PARCEL #7 = 0.29 ACRES / 12,746 S.F.
TEMPORARY LICENSE AREAS
TRESTLE STRUCTURE
PIEDMONT STRUCTURE
MILPITAS BLVD
MONTAGUE
EXPRESS
WAY
AMES
ROSEMITE
PIEDMONT
CREEK
DRIVE
WRIGLEY
VISTA
SIERRA
WAY
CONTINENTAL CORP
LINCOLN PROPERTIES
SANTA CLARA VALLEY WATER DISTRICT
PACIFIC ELECTRIC
PIPE LINING
WESTERN CHEMICAL
LEGEND:
EASEMENT AREA
TEMPORARY LICENSE AREA
BRIDGE STRUCTURE
RESTATED EASEMENTS
UPRRCO. R/W OUTLINED
CADD FILENAME 0296719.DGN
SCAN FILENAME 0296719-CA45840.TIF
NOTE: BEFORE YOU BEGIN ANY WORK, SEE AGREEMENT FOR FIBER OPTIC PROVISIONS.
EXHIBIT "A"
PROJECT AREA
UNION PACIFIC RAILROAD COMPANY
MILPITAS, SANTA CLARA COUNTY, CA
M.P. 10.69 TO 12.19 - MILPITAS INDUSTRIAL LEAD
TO ACCOMPANY AGREEMENT WITH
SANTA CLARA VALLEY WATER DISTRICT
XP V-12 / 4
SCALE: 1" = 200'
OFFICE OF REAL ESTATE
OMAHA, NEBRASKA DATE: 5-23-2016
COB FILE: 2967-19

COMPLETE

EXHIBIT A-1-X

TO CHANNEL IMPROVEMENT CONSTRUCTION & MAINTENANCE AGREEMENT

General Location of Piedmont Structure

(see attached)

CONFORMED

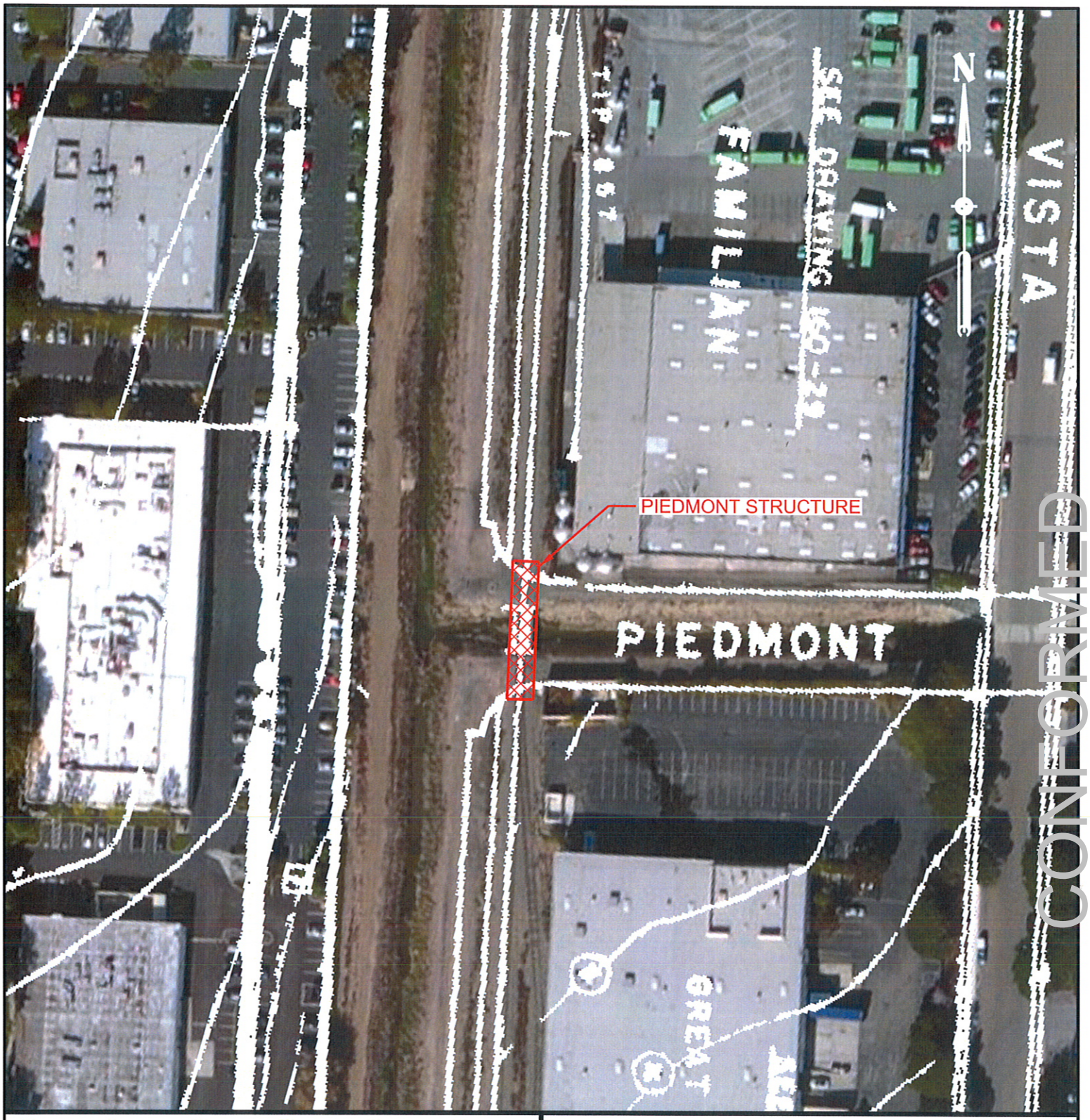

LEGEND:

BRIDGE STRUCTURE

UPRRCO. R/W OUTLINED

CADD FILENAME	0296719.DGN
SCAN FILENAME	0296719-CA45840.TIF

NOTE: BEFORE YOU BEGIN ANY WORK, SEE AGREEMENT FOR FIBER OPTIC PROVISIONS.

EXHIBIT "A-1-X"

UNION PACIFIC RAILROAD COMPANY

MILPITAS, SANTA CLARA COUNTY, CA

M.P. 11.23 - MILPITAS INDUSTRIAL LEAD

TO ACCOMPANY AGREEMENT WITH
SANTA CLARA VALLEY WATER DISTRICT
WP V-12 / 4
SCALE: 1" = 100'

OFFICE OF REAL ESTATE
OMAHA, NEBRASKA DATE: 5-18-2016

COB FILE: 2967-19

EXHIBIT A-1-Y

TO CHANNEL IMPROVEMENT CONSTRUCTION & MAINTENANCE AGREEMENT

General Location of Trestle Structure

(see attached)

CONFORMED

LEGEND:

BRIDGE STRUCTURE

UPRRCO. R/W OUTLINED

CADD FILENAME	0296719.DGN
SCAN FILENAME	0296719-CA45840.TIF

NOTE: BEFORE YOU BEGIN ANY WORK, SEE AGREEMENT FOR FIBER OPTIC PROVISIONS.

EXHIBIT "A-1-Y"

UNION PACIFIC RAILROAD COMPANY

MILPITAS, SANTA CLARA COUNTY, CA

M.P. 12.09 - MILPITAS INDUSTRIAL LEAD

TO ACCOMPANY AGREEMENT WITH
SANTA CLARA VALLEY WATER DISTRICT
WP V-12 / 4
SCALE: 1" = 100'

OFFICE OF REAL ESTATE
OMAHA, NEBRASKA DATE: 5-18-2016

COB FILE: 2967-19

EXHIBIT A-2

TO CHANNEL IMPROVEMENT CONSTRUCTION & MAINTENANCE AGREEMENT

Legal description and depiction of Railroad Easement Area
(APN Nos. 086-32-021 and 086-32-028)

(see attached)

CONFORMED

EXHIBIT A-2

SANTA CLARA VALLEY WATER DISTRICT
5750 Almaden Expressway
San Jose, CA 95118

Original By:	CLM	Revised By:	SJP
Date:	11/30/2015	Revision Date:	5/4/2016
PROJECT:	BERRYESSA CREEK	APN:	086-32-021 & 028
PROPERTY:	UNION PACIFIC RAILROAD CO.	RESC File No.:	401785

ALL THAT CERTAIN REAL PROPERTY SITUATE IN THE CITY OF MILPITAS, COUNTY OF SANTA CLARA, STATE OF CALIFORNIA, BEING A PORTION OF THE LANDS GRANTED TO WESTERN PACIFIC RAILROAD COMPANY (NOW KNOWN AS UNION PACIFIC RAIL ROAD COMPANY) PER THAT CERTAIN GRANT DEED RECORDED ON SEPTEMBER 13, 1951 IN BOOK 2282 OF OFFICIAL RECORDS AT PAGE 395, IN THE OFFICE OF THE RECORDER COUNTY OF SANTA CLARA, MORE PARTICULARLY DESCRIBED AS FOLLOWS:

PARCEL 1 – CHANNEL IMPROVEMENT EASEMENT:

COMMENCING AT THE NORTHEAST CORNER OF THE LANDS GRANTED TO THE WESTERN PACIFIC RAILROAD COMPANY (NOW KNOWN AS UNION PACIFIC RAILROAD COMPANY) PER THAT CERTAIN GRANT DEED RECORDED ON JUNE 18, 1951 AS DOCUMENT NUMBER 726399 OF OFFICIAL RECORDS, IN THE OFFICE OF THE RECORDER, COUNTY OF SANTA CLARA;

THENCE ALONG THE NORTHERLY LINE OF SAID LANDS, SOUTH 79°05'00" WEST, 154.59 FEET TO THE **POINT OF BEGINNING**;

THENCE LEAVING SAID NORTHERLY LINE OF SAID LANDS, SOUTH 11°50'30" EAST, 795.66 FEET TO THE A POINT ON THE NORTHWESTERLY LINE OF THAT CERTAIN EASEMENT GRANTED TO THE SANTA CLARA VALLEY WATER DISTRICT PER GRANT DEED RECORDED ON JANUARY 23, 1975 AS DOCUMENT NUMBER 4933884 OF OFFICIAL RECORDS, IN THE OFFICE OF THE RECORDER, COUNTY OF SANTA CLARA, SAID POINT ALSO BEING THE BEGINNING OF A NON-TANGENT CURVE TO THE RIGHT, HAVING A RADIUS OF 397.32 FEET, WHOSE CENTER BEARS NORTH 77°37'43" WEST.

THENCE SOUTHWESTERLY ALONG SAID CURVE AND THE NORTHERLY LINE OF SAID EASEMENT, THROUGH A CENTRAL ANGLE OF 3°18'23", FOR AN ARC LENGTH OF 22.93 FEET TO A POINT ON THE WESTERLY LINE OF SAID EASEMENT;

THENCE CONTINUING ALONG SAID WESTERLY LINE OF SAID EASEMENT, SOUTH 11°50'30" EAST,41.20 FEET TO A CURVE CONCENTRIC WITH AND DISTANT 25.00 FEET SOUTHEASTERLY FROM THE CENTERLINE OF THE U.P.R.R. TRACKS;

THENCE SOUTHWESTERLY ALONG SAID CURVE, BEING A NON-TANGENT CURVE TO THE RIGHT, HAVING A RADIUS OF 407.00 FEET, WHOSE CENTER BEARS NORTH 71°44'24" WEST, THROUGH A CENTRAL ANGLE OF 2°42'12" FOR AN ARC LENGTH OF 19.20 FEET TO A POINT ON THE EASTERLY LINE OF THAT CERTAIN EASEMENT GRANTED TO THE SANTA CLARA COUNTY FLOOD CONTROL AND WATER CONSERVATION DISTRICT (NOW KNOWN AS THE SANTA CLARA VALLEY WATER

CONFORMED

EXHIBIT A-2

DISTRICT) RECORDED ON APRIL 19, 1955 IN DOCUMENT NUMBER 1078042 OF OFFICIAL RECORDS, IN THE OFFICE OF THE RECORDER, COUNTY OF SANTA CLARA;

THENCE CONTINUING ALONG SAID EASTERLY LINE, NORTH 11°50'30" WEST, 874.19 FEET TO A POINT ON THE NORTHERLY LINE OF SAID LANDS;

THENCE CONTINUING ALONG SAID NORTHERLY LINE, NORTH 79°05'00" EAST, 20.02 FEET TO THE **POINT OF BEGINNING**.

CONTAINING 16,742 SQUARE FEET OF LAND, MORE OR LESS.

PARCEL 2 – CHANNEL IMPROVEMENT EASEMENT:

COMMENCING AT THE NORTHEAST CORNER OF THE LANDS GRANTED TO THE WESTERN PACIFIC RAILROAD COMPANY (NOW KNOWN AS UNION PACIFIC RAILROAD COMPANY) PER THAT CERTAIN GRANT DEED RECORDED ON JUNE 18, 1951 AS DOCUMENT NUMBER 726399 OF OFFICIAL RECORDS, IN THE OFFICE OF THE RECORDER, COUNTY OF SANTA CLARA;

THENCE ALONG THE NORTHERLY LINE OF SAID LANDS SOUTH 79°05'00" EAST, 234.63 FEET TO A POINT ON THE WESTERLY LINE OF THAT CERTAIN EASEMENT GRANTED TO THE SANTA CLARA FLOOD CONTROL AND WATER CONSERVATION DISTRICT (NOW KNOWN AS THE SANTA CLARA VALLEY WATER DISTRICT) RECORDED ON APRIL 19, 1955 IN DOCUMENT NUMBER 1078042 OF OFFICIAL RECORDS, IN THE OFFICE OF THE RECORDER, COUNTY OF SANTA CLARA AND BEING THE **POINT OF BEGINNING**.

THENCE ALONG SAID WESTERLY LINE, SOUTH 11°50'30" EAST, 948.05 FEET TO A CURVE CONCENTRIC WITH AND DISTANT 25.00 FEET SOUTHEASTERLY FROM THE CENTERLINE OF THE U.P.R.R. TRACKS;

THENCE SOUTHWESTERLY ALONG SAID CURVE, BEING A NON TANGENT CURVE TO THE RIGHT, HAVING A RADIUS OF 407.00 FEET, WHOSE CENTER BEARS NORTH 55°42'56" WEST, THROUGH A CENTRAL ANGLE OF 1°54'19" FOR AN ARC LENGTH OF 13.53 FEET TO A POINT ON THE EASTERLY LINE OF MILPITAS BOULEVARD;

THENCE CONTINUING ALONG SAID EASTERLY LINE OF MILPITAS BOULEVARD, NORTH 11°54'30" WEST, 957.44 FEET TO A POINT ON THE NORTHERLY LINE OF SAID LANDS;

THENCE CONTINUING ALONG SAID NORTHERLY LINE, NORTH 79°05'00" EAST, 11.03 FEET TO THE **POINT OF BEGINNING**.

CONTAINING 9,976 SQUARE FEET OF LAND, MORE OR LESS.

BASIS OF BEARING:

BEARINGS AND DISTANCES HEREIN ARE BASED ON THE CALIFORNIA COORDINATE SYSTEM OF 1983, ZONE 3. MULTIPLY HEREIN DESCRIBED DISTANCES BY 1.00006432 TO OBTAIN GROUND DISTANCES.

CONFORMED

EXHIBIT A-2

SURVEYOR'S STATEMENT:

THE DESCRIPTION WAS PREPARED BY ME OR UNDER MY DIRECTION IN CONFORMANCE WITH THE REQUIREMENTS OF THE LAND SURVEYOR'S ACT.

GISELA SILKE JOBST, L9169

5-25-2016
Date

LICENSED LAND SURVEYOR
GISELA SILKE JOBST
L9169
STATE OF CALIFORNIA

CONFORMED

EXHIBIT A-2

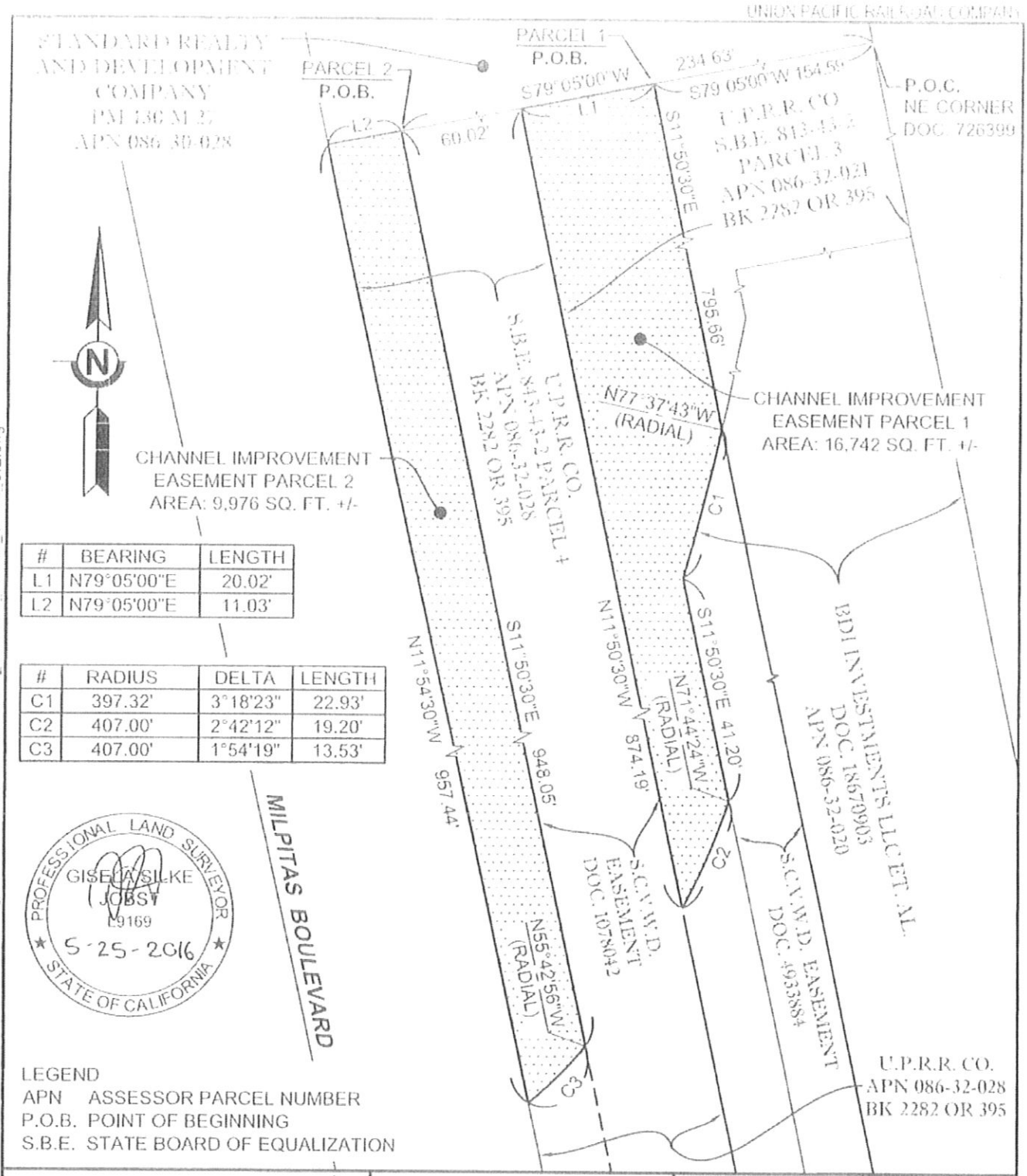

#	BEARING	LENGTH
L1	N79°05'00"E	20.02'
L2	N79°05'00"E	11.03'

#	RADIUS	DELTA	LENGTH
C1	397.32'	3°18'23"	22.93'
C2	407.00'	2°42'12"	19.20'
C3	407.00'	1°54'19"	13.53'

Santa Clara Valley Water District

SCALE: NOT TO SCALE

PROJ. NO.	4017
FILE NO.	85
APN	086-32-021 &028
TITLE REPORT NO.	0616013055-RR
DRAWN	CLM
DATE	11/30/15

REV.	APPR.	DATE	DESCRIPTION
1	SJP	5/4/16	MADE PARCEL 3 A STAND ALONE EASEMENT
2			

SCVWD W:\ROW\00PROJECTS\BERRYESSA CREEK\2016_054\AUTOCAD\CURRENT\2016_054PLAT_401785_UPRR_CIE.dwg

Sheet 1 of 1

CONFORMED

EXHIBIT A-3

TO CHANNEL IMPROVEMENT CONSTRUCTION & MAINTENANCE AGREEMENT

Legal description and depiction of Standard Easement Area
(East Calaveras Boulevard)

(see attached)

CONFORMED

EXHIBIT A-3

PARCEL 4 - CHANNEL IMPROVEMENT EASEMENT:
ALL THAT CERTAIN REAL PROPERTY SITUATE IN THE CITY OF MILPITAS, COUNTY OF SANTA CLARA, STATE OF CALIFORNIA, BEING A PORTION OF CALAVERAS BOULEVARD AS SHOWN ON THAT CERTAIN PARCEL MAP FILED ON JUNE 28, 1972 IN BOOK 303 OF MAPS AT PAGE 53, IN THE OFFICE OF THE RECORDER, COUNTY OF SANTA CLARA, MORE PARTICULARLY DESCRIBED AS FOLLOWS:

BEGINNING AT THE NORTHEAST CORNER OF THE LANDS OF THE SANTA CLARA COUNTY FLOOD CONTROL AND WATER CONSERVATION DISTRICT (NOW KNOWN AS THE SANTA CLARA VALLEY WATER DISTRICT) PER THAT CERTAIN GRANT DEED RECORDED ON MAY 10, 1972 AS DOCUMENT NUMBER 4253949 OF OFFICIAL RECORDS, IN THE OFFICE OF THE RECORDER, COUNTY OF SANTA CLARA, ALSO BEING A POINT ON THE SOUTH LINE OF CALAVERAS BOULEVARD;

THENCE ALONG SAID SOUTH LINE OF CALAVERAS BOULEVARD, SAID SOUTH LINE ALSO BEING THE NORTHERLY LINE OF SAID DOCUMENT NUMBER 4253949, SOUTH 74°36'19" WEST, 110.93 FEET TO THE BEGINNING OF A CURVE CONCAVE TO THE NORTH HAVING A RADIUS OF 10,062.00 FEET;

THENCE ALONG SAID CURVE AND SAID SOUTH LINE THROUGH A CENTRAL ANGLE OF 0°07'15", AN ARC LENGTH OF 21.22 FEET TO THE NORTHWEST CORNER OF SAID LANDS;

THENCE NORTH 12°34'52" WEST, 65.16 FEET TO A POINT ON THE SOUTH LINE OF THAT CERTAIN EASEMENT GRANTED TO THE SANTA CLARA COUNTY FLOOD CONTROL AND WATER CONSERVATION DISTRICT (NOW KNOWN AS THE SANTA CLARA VALLEY WATER DISTRICT) PER THAT CERTAIN GRANT DEED RECORDED ON APRIL 19, 1955 AS DOCUMENT NUMBER 1078041 OF OFFICIAL RECORDS, COUNTY OF SANTA CLARA;

THENCE ALONG SAID SOUTH LINE OF SAID EASEMENT, NORTH 75°28'48" EAST, 61.57 FEET TO THE SOUTHEAST CORNER OF SAID EASEMENT;

THENCE ALONG THE EAST LINE OF SAID EASEMENT NORTH 12°35'12" WEST, 60.13 FEET TO A POINT ON THE NORTH LINE OF CALAVERAS BOULEVARD, ALSO BEING THE SOUTH LINE OF THE LANDS GRANTED TO THE SANTA CLARA VALLEY WATER DISTRICT PER THAT CERTAIN GRANT DEED RECORDED ON JUNE 15, 1976 AS DOCUMENT NUMBER 5313086 OF OFFICIAL RECORDS, IN THE OFFICE OF THE RECORDER, COUNTY OF SANTA CLARA;
THENCE ALONG SAID NORTH LINE OF CALAVERAS BOULEVARD, NORTH 74°35'59" EAST, 70.55 FEET;

THENCE LEAVING SAID NORTH LINE, SOUTH 12°34'52" EAST, 124.39 FEET TO THE **POINT OF BEGINNING.**

CONTAINING 12,746 SQUARE FEET OF LAND, MORE OR LESS.

BASIS OF BEARING:
BEARINGS AND DISTANCES HEREIN ARE BASED ON THE CALIFORNIA COORDINATE SYSTEM OF 1983, ZONE 3.

CONFORMED

EXHIBIT A-3

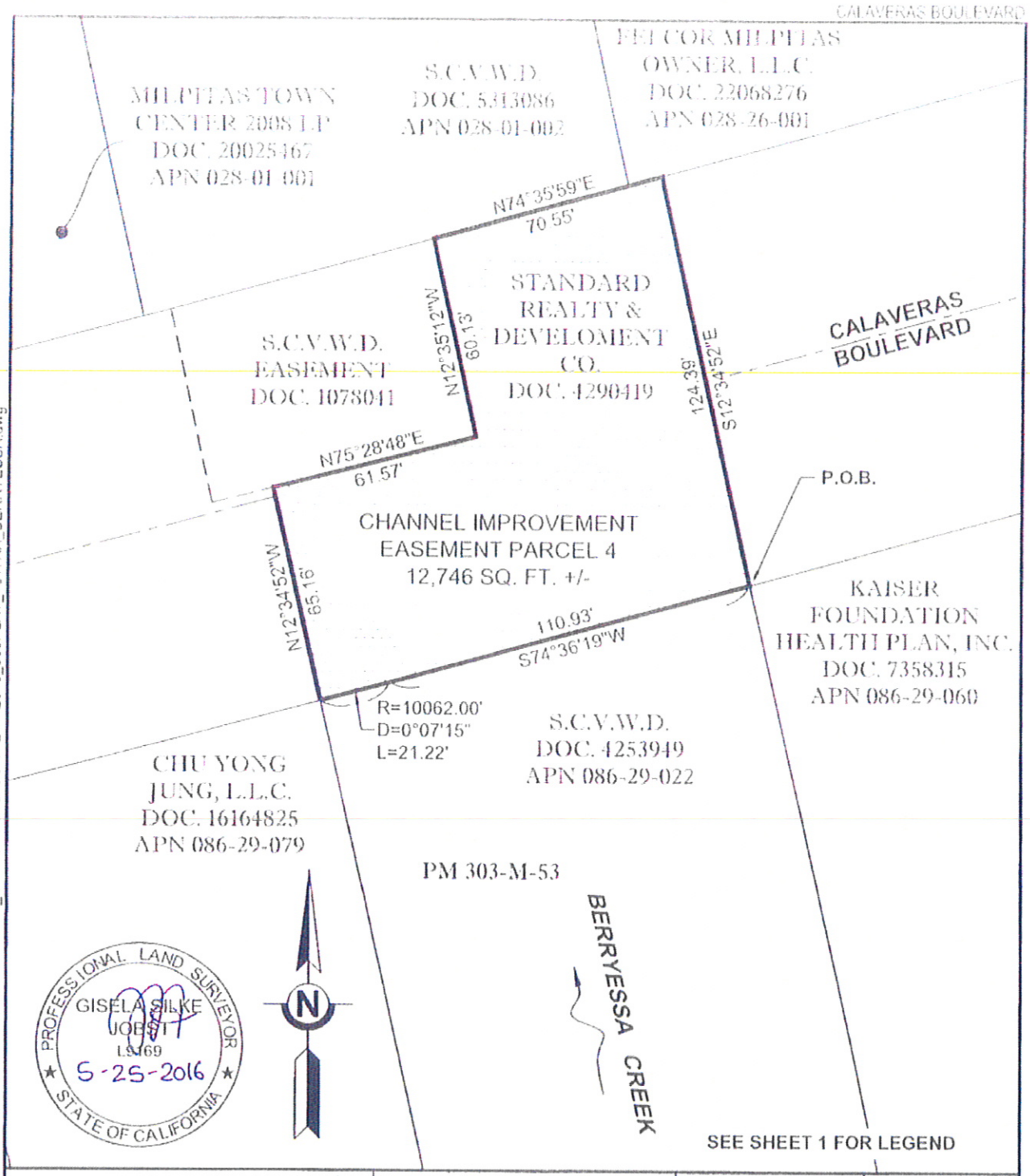

Santa Clara Valley Water District

SCALE: 1" = 40'

PROJ. NO.	4017
FILE NO.	89
APN	N/A
TITLE REPORT NO.	0616012500-RR
DRAWN	RPC
DATE	2/8/2016

REV.	APPR.	DATE	DESCRIPTION
1	SJP	5/04/16	MERGED 4017-80,82,88 AND 89 INTO SINGLE DOC.
2			

SCVWD W:\ROW\00PROJECTS\BERRYESSA CREEK\2016_009\AUTOCAD\CURRENT\2016_009PLAT_4017XX_BERRYESSA.dwg

CONFORMED

EXHIBIT A-4

TO CHANNEL IMPROVEMENT CONSTRUCTION & MAINTENANCE AGREEMENT

Legal description and depiction of Railroad Easement Area
(Los Coches Street)

(see attached)

CONFORMED

EXHIBIT A-4

SANTA CLARA VALLEY WATER DISTRICT
5750 Almaden Expressway
San Jose, CA 95118

Original By:	CLM	Revised By:	NIP
Date:	04/22/2015	Revision Date:	MAY 4, 2016
PROJECT:	BERRYESSA CREEK	APN:	N/A
PROPERTY:	STANDARD REALTY & DEV. CO.	RESU File No.:	1017.50182288.89

PARCEL 1 - CHANNEL IMPROVEMENT EASEMENT:

ALL THAT CERTAIN REAL PROPERTY SITUATE IN THE CITY OF MILPITAS, COUNTY OF SANTA CLARA, STATE OF CALIFORNIA, BEING A PORTION OF LOS COCHES STREET AS SHOWN ON THAT CERTAIN PARCEL MAP FILED ON JUNE 28, 1972 IN BOOK 303 OF MAPS AT PAGE 53, IN THE OFFICE OF THE RECORDER, COUNTY OF SANTA CLARA, MORE PARTICULARLY DESCRIBED AS FOLLOWS:

COMMENCING AT A POINT ON THE NORTH LINE OF LOS COCHES STREET (60 FEET WIDE), AS SHOWN ON SAID PARCEL MAP, SAID POINT ALSO BEING THE SOUTHWEST CORNER OF THAT CERTAIN LAND GRANTED TO THE SANTA CLARA VALLEY FLOOD CONTROL AND WATER CONSERVATION DISTRICT (NOW KNOWN AS THE SANTA CLARA VALLEY WATER DISTRICT) PER THAT CERTAIN GRANT DEED RECORDED ON MAY 10, 1972 AS DOCUMENT NUMBER 4253949 OF OFFICIAL RECORDS, IN THE OFFICE OF THE RECORDER, COUNTY OF SANTA CLARA;

THENCE ALONG SAID NORTH LINE OF LOS COCHES STREET (60 FEET WIDE), AS SHOWN ON SAID PARCEL MAP, ALSO BEING THE SOUTH LINE OF SAID LANDS OF SANTA CLARA VALLEY FLOOD CONTROL AND WATER CONSERVATION DISTRICT (NOW KNOWN AS THE SANTA CLARA VALLEY WATER DISTRICT), NORTH 75°56'48" EAST, 20.74 FEET TO THE **POINT OF BEGINNING**;

THENCE CONTINUING ALONG SAID NORTH LINE, NORTH 75°56'48" EAST, 80.00 FEET;

THENCE LEAVING SAID NORTH LINE, SOUTH 14°03'12" EAST, 60.00 FEET TO A POINT ON THE SOUTH LINE OF LOS COCHES STREET (60 FEET WIDE), AS SHOWN ON SAID PARCEL MAP, SAID LINE ALSO BEING THE NORTH LINE OF THE LANDS OF SANTA CLARA VALLEY FLOOD CONTROL AND WATER CONSERVATION DISTRICT (NOW KNOWN AS THE SANTA CLARA VALLEY WATER DISTRICT) PER THAT CERTAIN GRANT DEED RECORDED ON AUGUST 30, 1971 AS DOCUMENT NUMBER 4083033 OF OFFICIAL RECORDS, IN THE OFFICE OF THE RECORDER, COUNTY OF SANTA CLARA;

THENCE ALONG SAID SOUTH LINE, SOUTH 75°56'48" WEST, 80.00 FEET;

THENCE LEAVING SAID SOUTH LINE, NORTH 14°03'12" WEST, 60.00 FEET TO THE **POINT OF BEGINNING**.

CONTAINING 4,800 SQUARE FEET OF LAND, MORE OR LESS.

CONFORMED

EXHIBIT A-4

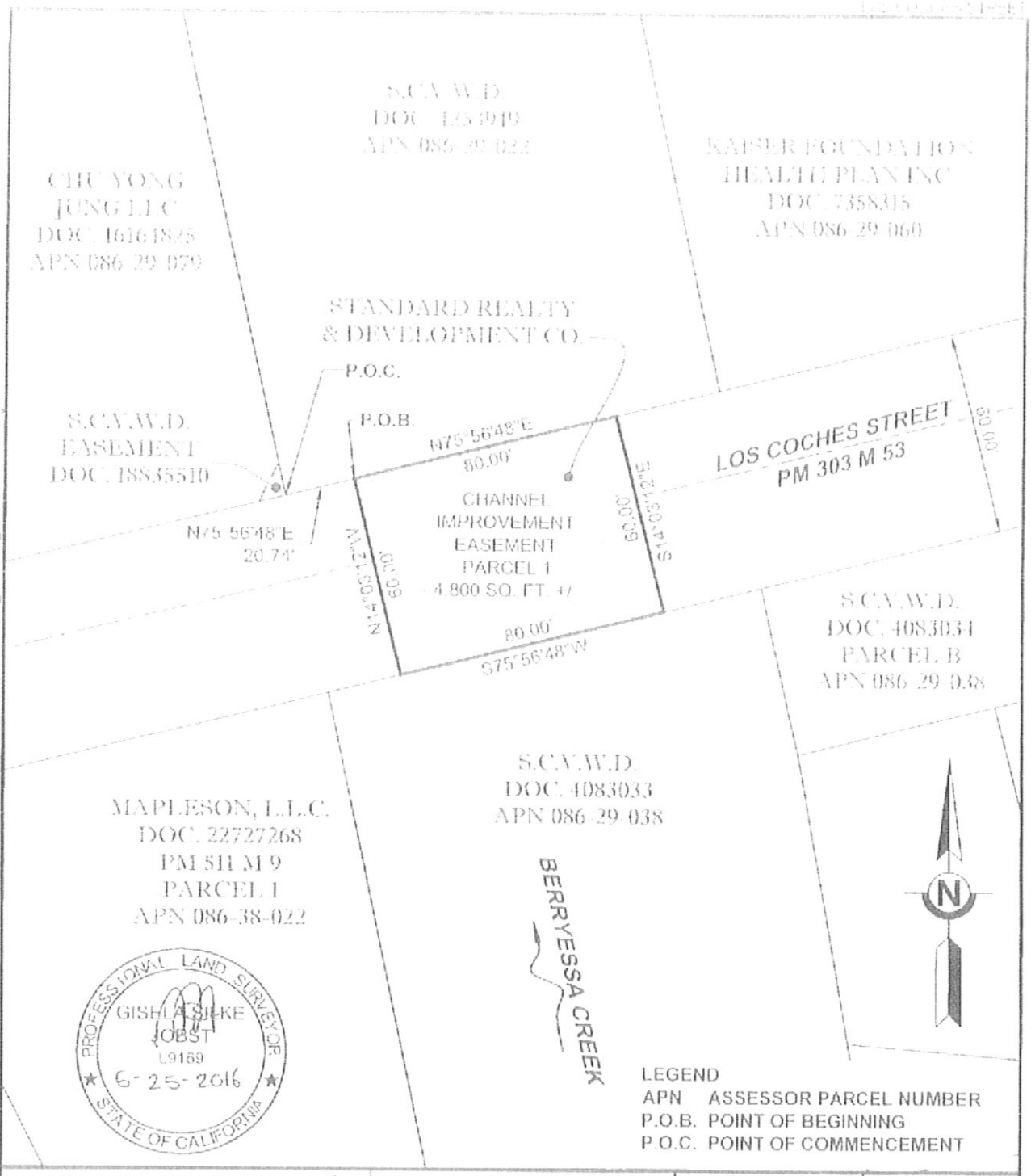

LEGEND
APN ASSESSOR PARCEL NUMBER
P.O.B. POINT OF BEGINNING
P.O.C. POINT OF COMMENCEMENT

Santa Clara Valley Water District

SCALE 1" =40'

REV.	APPR.	DATE	DESCRIPTION
1	SJP	5/4/16	MERGED 4017-80,82,88 AND 89 INTO SINGLE DOC
2			

PROJ. NO	4017
FILE NO.	80
APN	N/A
TITLE REPORT NO.	0616012498 RR
DRAWN	RPC
DATE	2/8/2016

SCVWD W:\ROW\00PROJECTS\BERRYESSA CREEK\2016_009\AUTOCAD\CURRENT\2016_009PLA_40'XX_BERRYESSA.dwg

Sheet 1 of 4

CONFORMED

EXHIBIT A-5

TO CHANNEL IMPROVEMENT CONSTRUCTION & MAINTENANCE AGREEMENT

Legal description and depiction of Railroad Easement Area
(Yosemite Drive)

(see attached)

CONFORMED

EXHIBIT A-5

PARCEL 2 - CHANNEL IMPROVEMENT EASEMENT:

ALL THAT CERTAIN REAL PROPERTY SITUATE IN THE CITY OF MILPITAS, COUNTY OF SANTA CLARA, STATE OF CALIFORNIA, BEING A PORTION OF YOSEMITE DRIVE AS SHOWN ON THAT CERTAIN PARCEL MAP FILED ON JANUARY 27, 1972 IN BOOK 296 OF MAPS AT PAGE 3, IN THE OFFICE OF THE RECORDER, COUNTY OF SANTA CLARA, MORE PARTICULARLY DESCRIBED AS FOLLOWS:

COMMENCING AT A POINT ON THE NORTH LINE OF YOSEMITE DRIVE (80 FEET WIDE), AS SHOWN ON SAID PARCEL MAP, SAID POINT ALSO BEING THE SOUTHWEST CORNER OF THAT CERTAIN LAND GRANTED TO THE SANTA CLARA COUNTY FLOOD CONTROL AND WATER CONSERVATION DISTRICT (NOW KNOWN AS THE SANTA CLARA VALLEY WATER DISTRICT), PER THAT CERTAIN GRANT DEED RECORDED ON AUGUST 30, 1971 AS DOCUMENT NUMBER 4083033 OF OFFICIAL RECORDS, IN THE OFFICE OF THE RECORDER, COUNTY OF SANTA CLARA;

THENCE ALONG SAID NORTH LINE OF YOSEMITE DRIVE (80 FEET WIDE), AS SHOWN ON SAID PARCEL MAP, ALSO BEING THE SOUTH LINE OF SAID LANDS, NORTH 75°28'48" EAST, 17.45 FEET TO THE **POINT OF BEGINNING**;

THENCE CONTINUING ALONG SAID NORTH LINE OF YOSEMITE DRIVE (80 FEET WIDE), AS SHOWN ON SAID PARCEL MAP, NORTH 75°28'48" EAST, 49.25 FEET TO THE BEGINNING OF A CURVE CONCAVE TO THE NORTH HAVING A RADIUS OF 1,572.65 FEET;

THENCE ALONG SAID CURVE THROUGH A CENTRAL ANGLE OF 1°05'49", AN ARC LENGTH OF 30.11 FEET;

THENCE LEAVING SAID NORTH LINE, SOUTH 12°30'12" EAST, 80.09 FEET TO A POINT ON THE SOUTH LINE OF YOSEMITE DRIVE (80 FEET WIDE), AS SHOWN ON SAID PARCEL MAP, SAID SOUTH LINE ALSO BEING THE NORTH LINE OF LANDS OF STANDARD REALTY AND DEVELOPMENT COMPANY PER THAT CERTAIN GRANT DEED RECORDED ON DECEMBER 28, 1970 AS DOCUMENT NUMBER 3829080 OF OFFICIAL RECORDS, IN THE OFFICE OF THE RECORDER, COUNTY OF SANTA CLARA, SAID POINT ALSO BEING THE BEGINNING OF A NON-TANGENT CURVE CONCAVE TO THE NORTH HAVING A RADIUS OF 1,652.62 FEET AND TO WHICH POINT A RADIAL LINE BEARS SOUTH 15°31'41" EAST;

THENCE WESTERLY ALONG SAID CURVE AND SAID SOUTH LINE THROUGH A CENTRAL ANGLE OF 1°00'58", AN ARC LENGTH OF 29.31 FEET;

THENCE CONTINUING ALONG SAID SOUTH LINE OF YOSEMITE DRIVE (80 FEET WIDE), AS SHOWN ON SAID PARCEL MAP, SOUTH 75°29'17" WEST, 48.57 FEET;

THENCE LEAVING SAID SOUTH LINE, NORTH 13°33'34" WEST, 80.02 FEET TO THE **POINT OF BEGINNING**.

CONTAINING 6,290 SQUARE FEET OF LAND, MORE OR LESS.

CONFORMED

EXHIBIT A-5

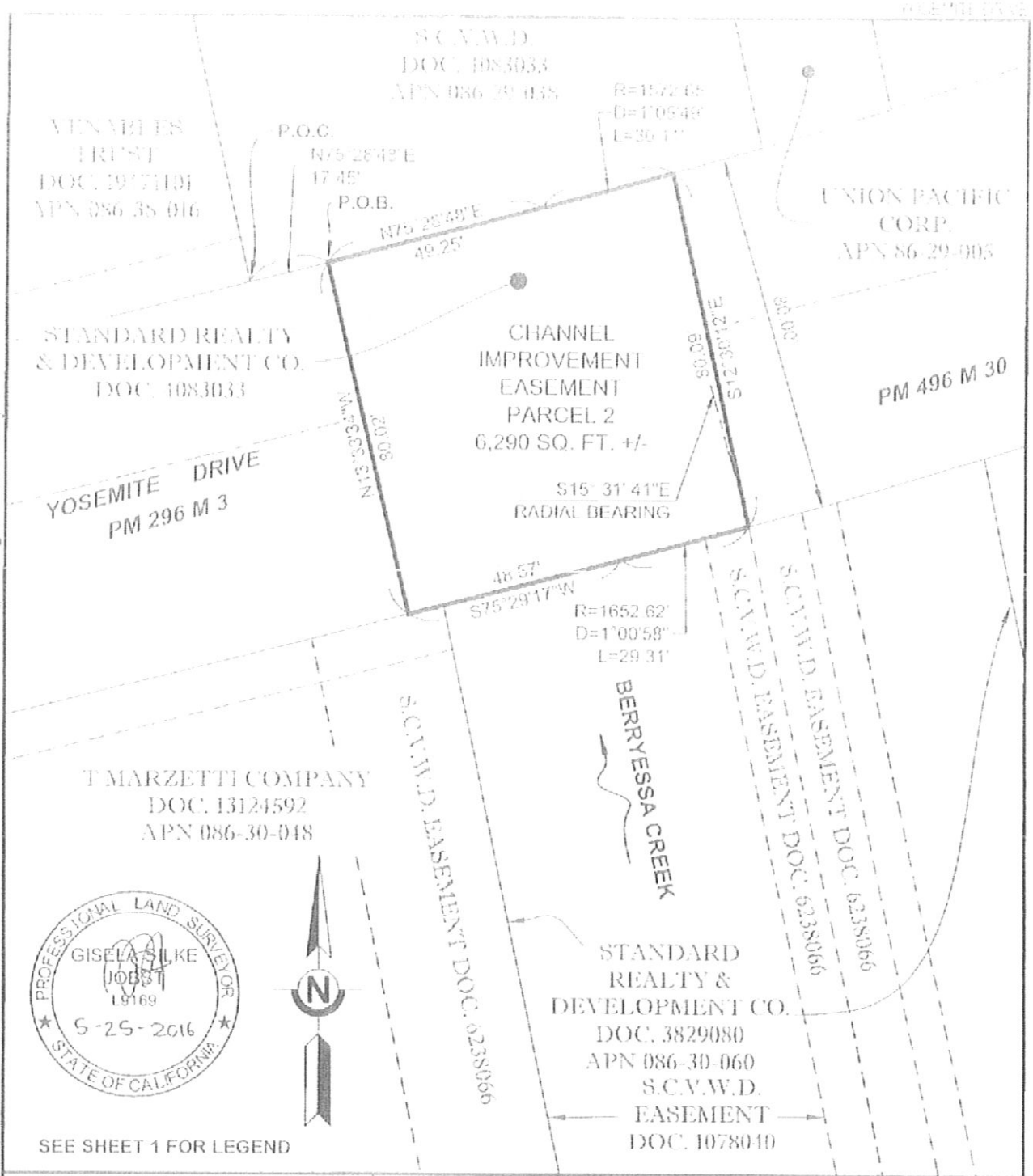

Santa Clara Valley Water District	SCALE: 1" =30'	PROJ. NO.	4017
		FILE NO.	82
		APN	N/A
		TITLE REPORT NO.	0616012496-RR
		DRAWN	RPC
		DATE	2/8/2016

REV	APPR	DATE	DESCRIPTION
1	SJP	5/4/16	MERGED 4017-80,82,88 AND 89 INTO SINGLE DOC
2			

S:\CVWD W:\ROWD\PROJECTS\BERRYESSA CREEK\2016_009\AUTOCAD\CURRENT\2016_009P_AT_4017XX_BERRYESSA.dwg

CONFORMED

EXHIBIT A-6

TO CHANNEL IMPROVEMENT CONSTRUCTION & MAINTENANCE AGREEMENT

Legal description and depiction of Railroad Easement Area
(APN No. 086-30-028)

(see attached)

CONFORMED

EXHIBIT A-6

SANTA CLARA VALLEY WATER DISTRICT
5750 Almaden Expressway
San Jose, CA 95118

Original By: CEM
Date: 11-30-2015

Revised By: NIP
Revised Date: 5-4-2016

PROJECT: BERRYESSA CREEK
PROPERTY: STANDARD REALTY AND DEV. CO.

APN: 086-30-078
RESC File No.: 401798

ALL THAT CERTAIN REAL PROPERTY SITUATE IN THE CITY OF MILPITAS, COUNTY OF SANTA CLARA, STATE OF CALIFORNIA, BEING A PORTION OF THE LANDS OF STANDARD REALTY AND DEVELOPMENT COMPANY PER THAT CERTAIN GRANT DEED RECORDED ON DECEMBER 28, 1970 AS DOCUMENT NUMBER 3829080 OF OFFICIAL RECORDS, IN THE OFFICE OF THE RECORDER, COUNTY OF SANTA CLARA, MORE PARTICULARLY DESCRIBED AS FOLLOWS:

CHANNEL IMPROVEMENT EASEMENT:

BEGINNING AT THE SOUTHWESTERLY TERMINUS OF THE LINE "SOUTH 77°11'28" WEST 4.00 FEET" OF PARCEL A AS DESCRIBED ON THAT CERTAIN GRANT EASEMENT FROM STANDARD REALTY AND DEVELOPMENT COMPANY TO THE SANTA CLARA VALLEY WATER DISTRICT, RECORDED ON NOVEMBER 13, 1978 AS DOCUMENT NUMBER 6198684 OF OFFICIAL RECORDS, IN THE OFFICE OF THE RECORDER, COUNTY OF SANTA CLARA;

THENCE ALONG SAID LINE OF SAID EASEMENT, NORTH 78°10'45" EAST, 4.00 FEET TO THE EASTERLY TERMINUS OF SAID LINE OF SAID EASEMENT;

THENCE SOUTH 12°23'53" EAST, 38.22 FEET;
THENCE SOUTH 11°20'38" EAST, 24.94 FEET;
THENCE SOUTH 11°06'40" EAST, 25.03 FEET;
THENCE SOUTH 11°10'08" EAST, 24.43 FEET;
THENCE SOUTH 14°44'08" EAST, 24.95 FEET;
THENCE SOUTH 11°42'49" EAST, 25.58 FEET;
THENCE SOUTH 11°02'27" EAST, 25.11 FEET;
THENCE SOUTH 11°02'38" EAST, 25.00 FEET;
THENCE SOUTH 11°02'52" EAST, 25.00 FEET;
THENCE SOUTH 11°02'36" EAST, 25.00 FEET;
THENCE SOUTH 11°02'29" EAST, 25.00 FEET;
THENCE SOUTH 11°02'32" EAST, 25.00 FEET;
THENCE SOUTH 11°02'24" EAST, 25.00 FEET;
THENCE SOUTH 11°03'16" EAST, 25.00 FEET;
THENCE SOUTH 11°02'56" EAST, 25.00 FEET;
THENCE SOUTH 11°00'12" EAST, 25.02 FEET;
THENCE SOUTH 11°02'44" EAST, 24.99 FEET;
THENCE SOUTH 11°03'42" EAST, 25.00 FEET;
THENCE SOUTH 11°04'21" EAST, 25.00 FEET;
THENCE SOUTH 11°06'52" EAST, 33.17 FEET TO A POINT ON THE EASTERLY LINE OF SAID PARCEL A OF SAID EASEMENT;

CONFORMED

EXHIBIT A-6

THENCE CONTINUING ALONG SAID EASTERLY LINE NORTH 11°49'15" WEST 6.136 FEET TO THE POINT OF BEGINNING.

CONTAINING 1,541 SQUARE FEET OF LAND MORE OR LESS.

BASIS OF BEARING:

BEARINGS AND DISTANCES HEREIN ARE BASED ON THE CALIFORNIA COORDINATE SYSTEM OF 1983, ZONE 3. MULTIPLY HEREIN DESCRIBED DISTANCES BY 1.00006432 TO OBTAIN GROUND DISTANCES.

SURVEYOR'S STATEMENT:

THE DESCRIPTION WAS PREPARED BY ME OR UNDER MY DIRECTION IN CONFORMANCE WITH THE REQUIREMENTS OF THE LAND SURVEYOR'S ACT.

GISELA SILKE JOBST, L9169

5-25-2016
Date

LICENSED LAND SURVEYOR
GISELA SILKE JOBST
L9169
STATE OF CALIFORNIA

CONFORMED

EXHIBIT A-6

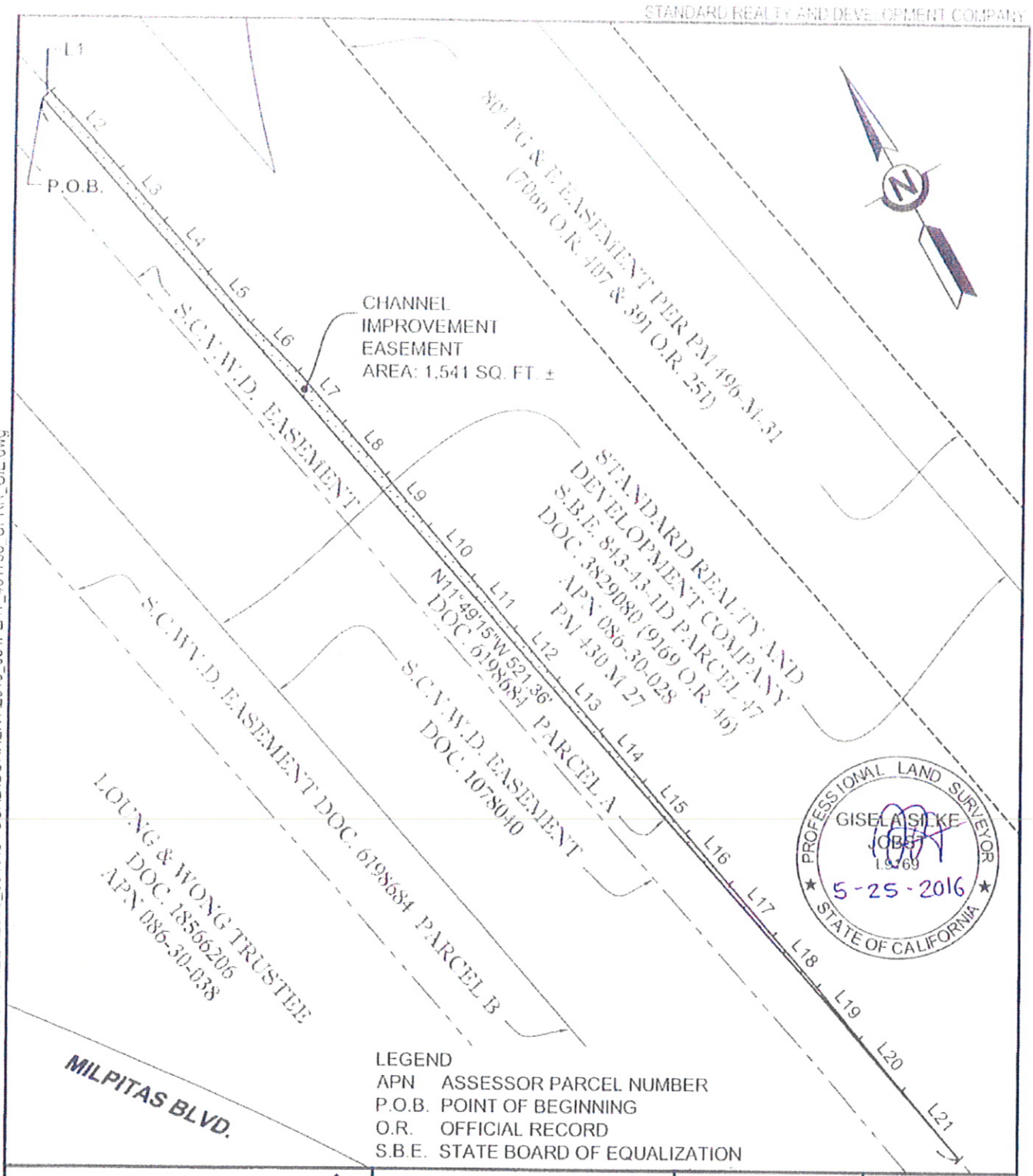

LEGEND
APN ASSESSOR PARCEL NUMBER
P.O.B. POINT OF BEGINNING
O.R. OFFICIAL RECORD
S.B.E. STATE BOARD OF EQUALIZATION

Santa Clara Valley Water District

SCALE: 1" = 50'

PROJ. NO.	4017
FILE NO.	98
APN	086-30-028
TITLE REPORT NO.	0616013055-RR
DRAWN	CLM
DATE	11/23/15

REV.	APPR.	DATE	DESCRIPTION
1	RPC	2/10/16	CHNL. IMP. EASE. WAS PERM. EASE.
2	SJP	5/4/16	MADE PARCEL 3 A STAND ALONE EASEMENT

Sheet 1 of 2

SCVWD W:\ROW\00PROJECTS\BERRYESSA CREEK\2016_054\AUTOCAD\CURRENT\2016_054PLAT_401798_UPRR_CIE.dwg

CONFORMED

EXHIBIT A-6

Line Table		
Line #	Direction	Length
L1	N78°10'45"E	4.00'
L2	S12°23'53"E	38.22'
L3	S11°20'38"E	24.94'
L4	S11°06'40"E	25.03'
L5	S11°10'08"E	24.43'
L6	S14°44'08"E	24.95'
L7	S11°42'49"E	25.58'
L8	S11°02'27"E	25.11'
L9	S11°02'38"E	25.00'
L10	S11°02'52"E	25.00'
L11	S11°02'36"E	25.00'

Line Table		
Line #	Direction	Length
L12	S11°02'29"E	25.00'
L13	S11°02'32"E	25.00'
L14	S11°02'24"E	25.00'
L15	S11°03'16"E	25.00'
L16	S11°02'56"E	25.00'
L17	S11°00'12"E	25.02'
L18	S11°02'44"E	24.99'
L19	S11°03'42"E	25.00'
L20	S11°04'21"E	25.00'
L21	S11°06'52"E	33.17'

PROFESSIONAL LAND SURVEYOR
GISELA SILKE JOBST
L9169
5-25-2016
STATE OF CALIFORNIA

Santa Clara Valley Water District

SCALE: NOT TO SCALE

PROJ. NO.	4017
FILE NO.	98
APN	086-30-028
TITLE REPORT NO.	0616013055-RR
DRAWN	CLM
DATE	11/24/15

REV.	APPR.	DATE	DESCRIPTION
1	SJP	5/4/16	MADE PARCEL 3 A STAND ALONE EASEMENT
2			

Sheet 2 of 2

SCVWD W:\ROW\00PROJECTS\BERRYESSA CREEK\2016_054\AUTOCAD\CURRENT\2016_054PLAT_401798_UPRR_CIE.dwg

CONFORMED

EXHIBIT A-7

TO CHANNEL IMPROVEMENT CONSTRUCTION & MAINTENANCE AGREEMENT

Legal description and depiction of Railroad Easement Area
(Montague Expressway)

(see attached)

CONFORMED

EXHIBIT A-7

PARCEL 3 - CHANNEL IMPROVEMENT EASEMENT:

ALL THAT CERTAIN REAL PROPERTY SITUATE IN THE CITY OF MILPITAS, COUNTY OF SANTA CLARA, STATE OF CALIFORNIA, BEING A PORTION OF MONTAGUE EXPRESSWAY (FORMERLY KNOWN AS LANDESS AVENUE) AS SHOWN ON THAT CERTAIN RECORD OF SURVEY FILED ON SEPTEMBER 7, 1972 IN BOOK 308 OF MAPS AT PAGE 18, IN THE OFFICE OF THE RECORDER, COUNTY OF SANTA CLARA, MORE PARTICULARLY DESCRIBED AS FOLLOWS:

BEGINNING AT A POINT ON THE WEST LINE OF THAT CERTAIN EASEMENT RETAINED BY THE SANTA CLARA VALLEY WATER DISTRICT PER THAT CERTAIN QUITCLAIM DEED RECORDED ON APRIL 5, 2000 AS DOCUMENT NUMBER 15204021 OF OFFICIAL RECORDS, IN THE OFFICE OF THE RECORDER, COUNTY OF SANTA CLARA, SAID POINT ALSO BEING ON THE SOUTH LINE OF MONTAGUE EXPRESSWAY;

THENCE ALONG SAID EASEMENT THE FOLLOWING FOUR COURSES:

NORTH 11°48'26" WEST, 47.50 FEET;
NORTH 69°46'00" EAST, 67.75 FEET;
SOUTH 20°14'00" EAST, 35.00 FEET;
NORTH 69°46'00" EAST, 7.76 FEET;

THENCE LEAVING SAID EASEMENT, NORTH 11°47'56" WEST, 74.97 FEET;

THENCE SOUTH 69°48'25" WEST, 20.20 FEET TO THE SOUTHEAST CORNER OF THAT CERTAIN 60.00 FOOT WIDE EASEMENT GRANTED TO THE SANTA CLARA COUNTY FLOOD CONTROL AND WATER CONSERVATION DISTRICT (NOW KNOWN AS THE SANTA CLARA VALLEY WATER DISTRICT) PER THAT CERTAIN GRANT DEED RECORDED ON APRIL 19, 1955 AS DOCUMENT NUMBER 1078042 OF OFFICIAL RECORDS, IN THE OFFICE OF THE RECORDER, COUNTY OF SANTA CLARA;

THENCE ALONG THE SOUTHERLY LINE OF SAID EASEMENT, SOUTH 69°48'25" WEST, 60.66 FEET;

THENCE ALONG THE PROLONGATION OF SAID SOUTHERLY LINE, SOUTH 69°48'25" WEST, 10.10 FEET TO A POINT ON THE EASTERLY RIGHT-OF-WAY LINE OF MILPITAS BOULEVARD;

THENCE ALONG SAID EASTERLY RIGHT-OF-WAY LINE OF MILPITAS BOULEVARD, SOUTH 11°50'30" EAST, 87.15 FEET TO A POINT ON THE SOUTH LINE OF MONTAGUE EXPRESSWAY;

THENCE ALONG SAID SOUTH LINE NORTH 69°46'00" EAST, 10.21 FEET TO THE **POINT OF BEGINNING**.

CONTAINING 4,407 SQUARE FEET OF LAND, MORE OR LESS.

CONFORMED

EXHIBIT A-7

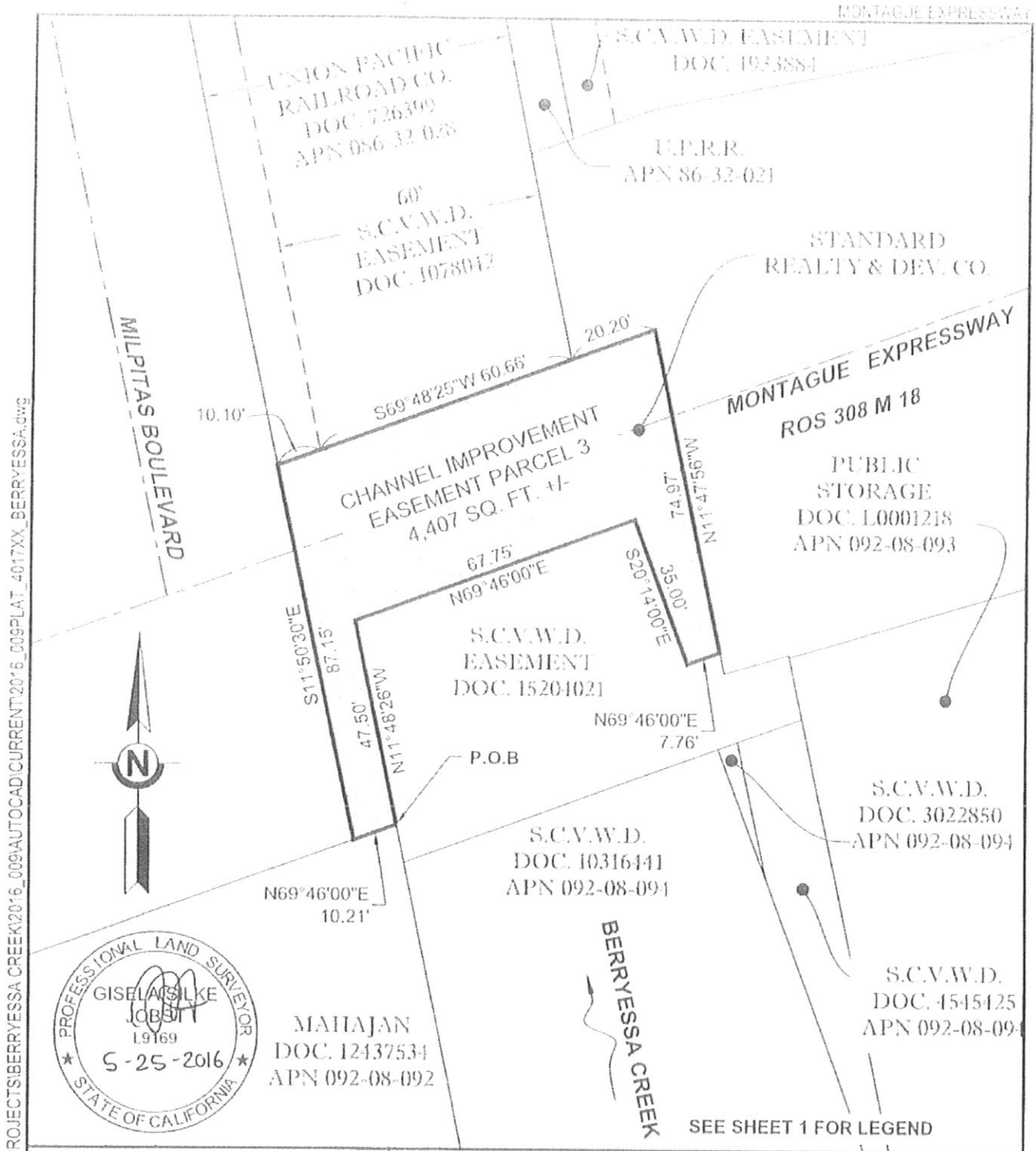

SCVWD W:\ROW\00PROJECTS\BERRYESSA CREEK\2016_009\AUTOCAD\CURRENT\2016_009PLAT_4017XX_BERRYESSA.dwg

Santa Clara Valley Water District	SCALE: 1" = 30'	PROJ. NO.	4017
		FILE NO.	88
		APN	N/A
REV. / APPR. / DATE	DESCRIPTION	TITLE REPORT NO.	616012501-RR
1 / SJP / 5/4/16	MERGED 4017-80,82,88 AND 89 INTO SINGLE DOC.	DRAWN	RPC
2		DATE	2/8/2016

CONFORMED

EXHIBIT A-8

TO CHANNEL IMPROVEMENT CONSTRUCTION & MAINTENANCE AGREEMENT

General Depiction of Temporary License Area

(see attached)

CONFORMED

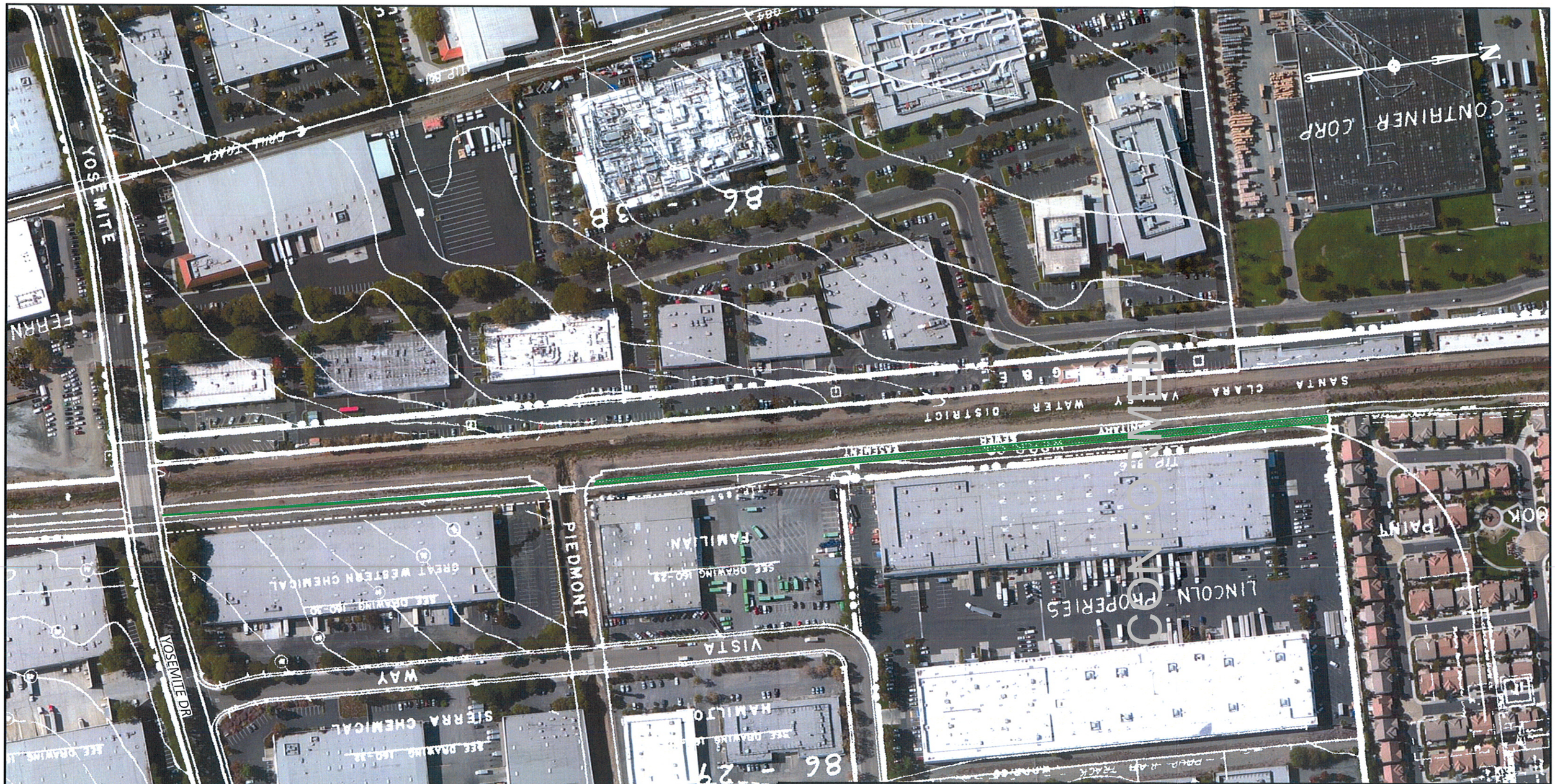

LEGEND:

TEMPORARY LICENSE AREA

UPRRCO. R/W OUTLINED

CADD FILENAME	0296719.DGN
SCAN FILENAME	0296719-CA45840.TIF

NOTE: BEFORE YOU BEGIN ANY WORK, SEE AGREEMENT FOR FIBER OPTIC PROVISIONS.

EXHIBIT "A-8"

UNION PACIFIC RAILROAD COMPANY

MILPITAS, SANTA CLARA COUNTY, CA

M.P. 11.40 TO 10.93 - MILPITAS INDUSTRIAL LEAD

TO ACCOMPANY AGREEMENT WITH
SANTA CLARA VALLEY WATER DISTRICT
WP V-12 / 4
SCALE: 1" = 200'

OFFICE OF REAL ESTATE
OMAHA, NEBRASKA DATE: 5-23-2016

COB FILE: 2967-19

EXHIBIT B

TO CHANNEL IMPROVEMENT CONSTRUCTION & MAINTENANCE AGREEMENT

Section 1. LIMITATION AND SUBORDINATION OF RIGHTS GRANTED.

a) The District's rights under this Agreement are subject and subordinate to the prior and continuing right and obligation of each of Standard and Railroad to use and maintain its entire property (including the Easement Property) to construct, add, maintain, repair, renew, use, operate, change, modify or relocate railroad tracks, signal, communication, fiber optics and other wirelines, pipelines and other facilities upon, under, over, along or across any or all parts of its property, all or any of which may be freely done by Standard and/or Railroad, as applicable; provided, however, that any use of the Easement Property by Standard and/or Railroad, as applicable, shall not interfere with or abridge the rights and easements acquired by the District hereunder.

b) This Agreement is also subject to all outstanding superior rights (including without limitation those in favor of easement holders, licensees and lessees of Standard's and/or Railroad's property, and others) and the right of Standard and/or Railroad, as applicable, to renew and extend the same, and is made without covenant of title or for quiet enjoyment. It shall be District's sole obligation to obtain such additional permission, licenses and grants necessary on account of any such existing rights. Notwithstanding the foregoing, each of Standard and Railroad understand and agree that it shall not grant a future right in the Easement Property, as applicable, that expressly interferes with or abridges the rights and easements acquired by the District hereunder.

c) The District and Railroad hereby acknowledge and agree that nothing contained in this Agreement shall be deemed to waive or diminish any legal preemption or preclusion that may apply to Railroad because of its status as a common carrier regulated by the federal government (including without limitation those provisions contained in 49 U.S.C. § 10501), and nothing contained in this Agreement shall be interpreted to suggest that Railroad has submitted, or will submit, to the jurisdiction or application of any local, state or federal levee or flood protection entity or laws.

Section 2. PLANS.

a) The District has submitted (or, as applicable, has caused USACE and/or Contractors to submit) plans showing design, specifications, and methods of procedure to Railroad for the portion of the Project located within the Easement Property and/or affecting Railroad's facilities or operations within the Project Area for Railroad's approval, in Railroad's sole discretion, at the design completion level of sixty percent (60%).

b) Prior to commencing the Project and any Project Work within the Project Area, the District shall submit (or, as applicable, shall cause USACE and/or Contractors to submit) to Railroad for Railroad's review and approval, in Railroad's sole discretion, the plans showing

CONFORMED

design, specifications, and methods of procedure for the portion of the Project located within the Easement Property and/or affecting Railroad's facilities or operations within the Project Area, at a minimum, at the ninety percent (90%) and the one hundred percent (100%) design completion levels. The District shall not commence the Project or any Project Work within the Project Area before the Plans have been approved in writing by Railroad's Vice President Engineering Services or his designated representative. Routine maintenance activities for sediment removal, graffiti removal and vegetation management are not subject to this Section 2, provided that such activities do not cause any deviations from the Plans and do not otherwise impact the operations, functionality or safety of Railroad.

b) "**Plans**" means the final one hundred percent (100%) completed plans, specifications, methods of procedures, and conditions of approval (including, without limitation, the plans, specifications, methods of procedure, and approval conditions for drainage, shoring, sheeting and excavations affecting the Easement Property, Temporary License Area, Railroad's right of way, other property, and railroad facilities) for the portion of the Project located within the Project Area that are approved in writing, by Railroad's Vice President Engineering-Design or his authorized representative. The Plans are hereby made a part of this Agreement by reference.

c) The Project, and all Project Work, shall be performed by the District (or another party on behalf of the District as permitted herein) to the satisfaction of Railroad, and in full conformance with the Plans. No changes in the Plans approved by Railroad may be made unless Railroad consents in writing to such changes.

d) Railroad shall have the right, if it so elects, as a condition of plan approval, to itself provide or require the District to provide, generally applied Railroad standards for protection and support that the Railroad deems appropriate for assuring the safety and continuity of its track and railroad operations and facilities during or after completion of Project and any Project Work. In the event Railroad itself provides such protection or support, the expenses incurred by Railroad in connection therewith shall be deemed Reimbursable Costs in accordance with Article 2 of this Agreement. Conditions of approval may also include without limitation, District's compliance with standards and specifications developed, endorsed or adopted by Railroad and/or AREMA as well as all applicable laws, rules and regulations. Railroad agrees to provide as much supporting documentation as is customarily provided by Railroad for projects of this type.

e) Intentionally Deleted.

f) Notwithstanding Railroad's review and approval of any plans (including the Plans), Railroad is not responsible for the design, functionality, or permitting of the Project improvements, the Project or any Project Work. Railroad's plan review and approval is limited to Railroad's perceived impact of the Project improvements, the Project and any Project Work on track and railroad operations and facilities. Railroad makes no representations or warranty whatsoever regarding the Plans, including without limitation any representations or warranty as to their validity, accuracy, legal compliance or completeness. Any reliance by District or others

CONFORMED

(including without limitation, USACE and any Contractor) on the Plans is at the risk of the District and such others.

Section 3. PERMITS.

Railroad shall have no obligation to obtain (or to be responsible for any costs or expenses associated with) any federal, state and local permits that may be required for the Project and any Project Work. Railroad will coordinate any permits required for the performance of the at-grade roadway crossing work, at the District's cost and expense.

Section 4. CONSTRUCTION, MAINTENANCE AND OPERATION.

a) The District, at its sole expense, shall keep and operate the Project improvements on the Easement Property in a good and safe condition. The District shall keep the Easement Property free and clear of vegetation, debris, sediment or obstructive matter which may or could interfere with or impede the proper functioning of drainage or Railroad's trains, property, facilities and operations.

b) The District shall not cross Railroad's track with any equipment except at existing, open public crossings, unless Railroad and the District have made a separate written crossing agreement in accordance with Article 9 above. When not in use, the District's equipment and materials shall be kept at least twenty five (25) feet from the centerline of the nearest railroad track. Equipment includes without limitation vehicles, tools, and machinery.

c) Except in those areas where no facilities were permitted on Plans because of clearance to the Railroad's trackage, the District shall provide, maintain, and keep in place at all times adequate barrier protection or gates on the portion of the Project improvements located on the Easement Property to prevent persons, vehicles and equipment entering on the Project Area or crossing Railroad's tracks via the Project Area.

d) During the performance of the Project or any Project Work, the District shall not excavate on any embankment or near the toe of any embankment which supports or stabilizes a track or other railroad facility without prior written plan approval of Railroad. In the event of any instability or settlement of such embankment, track or railroad facility related to any excavation for the Project or any Project Work, the District, at its sole expense, shall restore Railroad's embankment to its proper grade, slope, composition and dimensions. Railroad may elect to restore such embankment, tracks and railroad facilities using Railroad's work force and material at the District's sole expense.

e) The District shall protect at all times Railroad's personnel, trains, property, facilities and operations, including without limitation the track and all of its support components, from damage related to or arising from the Project improvements, the Project or Project Work. Railroad has the right to require and furnish during any Project Work, at the District's sole expense, all flagging and/or other protection which, in Railroad's sole judgment, are appropriate or desirable for promoting the continuity of railroad operations and/or the safety of Railroad's personnel, trains, property, facilities, and operations.

CONFORMED

Section 5. **NOTICE OF COMMENCEMENT OF WORK, FLAGGING.**

a) The District agrees to coordinate (and shall cause USACE and/or any Contractors to coordinate) all Project Work with the following Railroad representative or his or her duly authorized representative (the "**Railroad Representative**"):

Union Pacific Railroad Company
Manager of Track Maintenance
37950 Central Court, Suite B
Newark, California 94560

Subject to the advance notice requirements included in Section 14 below, the District agrees to notify the Railroad Representative at least fifteen (15) days in advance of the District commencing any Project Work, and at least thirty (30) days in advance of the proposed performance of any activity or work in which any person or equipment will be within twenty-five (25) feet of any track, or will be near enough to any track that any equipment extension (including without limitation a crane boom) can reach to within twenty-five (25) feet of any track, and in no event will the District access, and the District shall be responsible for ensuring that neither USACE nor any Contractor accesses, any Standard property and/or Railroad property within twenty-five (25) feet of any track until Railroad advises the District it is safe to do so. In an emergency situation requiring immediate attention, the District shall provide as much notice as practicable to the Railroad Representative before commencing any work or activity permitted by this Agreement. Equipment includes without limitation vehicles, tools, and machinery. **Subject to the foregoing, in an emergency situation requiring immediate attention, the District will also call Railroad via the Response Management Communications Center at 1-888-877-7267.** Notwithstanding the foregoing notice requirements in this Section 5, the District shall not be required to provide such notice for any day to day use by the District for ingress and egress of those roadways located on the Easement Property that are separated from Railroad's trackage by a fence or that portion of the roadway adjacent thereto where the parties have permitted no fence to be installed due to clearance issues; provided, however, that the District shall be required to provide notice if any equipment extension (including without limitation a crane boom) can reach beyond the edge of the Easement Property closest to the Railroad's trackage. For the avoidance of doubt, day to day use of the roadway for ingress or egress shall not include any work being performed on or about the roadway.

b) Upon receipt of the notice required by Section 5(a) above, the Railroad Representative will determine and inform the District whether a flagman need be present and whether the District need implement any special protective or safety measures. If any flagmen or other special protective or safety measures are performed by the Railroad, such services will be provided at the District's expense with the understanding that if Railroad provides any flagging or other services, the District shall not be relieved of any of its responsibilities or liabilities set forth herein.

CONFORMED

c) The District shall prohibit all work and activity within twenty-five (25) feet of a track's centerline during the times that the flagging or other special protective or safety measures required by the Railroad Representative are not present or active at the activity or work site.

d) The District acknowledges that:

i) a flagman is paid one and one-half times the current hourly rate for overtime, Saturdays and Sundays; and two and one-half times current hourly rate for holidays.

ii) a flagman's wage rates are subject to change, at any time, by law or by agreement between the Railroad and its employees, and may be retroactive as a result of negotiations or a ruling of an authorized government agency. Additional charges on labor are also subject to change. If the wage rate or additional charges are changed, the District shall pay on the basis of the new rates and charges.

iii) reimbursement to the Railroad will be required covering the full eight hour day during which a flagman is furnished, unless he or she can be assigned to other Railroad work during a portion of such day, in which event reimbursement will not be required for the portion of the day during which the flagman is engaged in other work. Reimbursement will also be required for any day not actually worked by said flagman following his assignment to work on the project for which the Railroad is required to pay the flagman and which could not reasonably be avoided by the Railroad by assignment of such flagman to other work, even though the District may not be working during such time.

e) All expenses connected with the furnishing of a flagman or other special protective or safety measures shall be at the sole cost and expense of the Contractor and the District. The District may elect to have Railroad initially send bills for such expenses to the Contractor. For projects having duration beyond 30 days, Railroad may bill such expenses on an installment basis as work progresses. Railroad and shall have one hundred eighty (180) days to calculate and send final billing for such expenses to the District or Contractor after Railroad has been notified in writing by the District that the project work has been completed. The District or Contractor shall pay the progressive and final billing within thirty (30) days after its receipt of billing. The District shall pay Railroad for all bills which are initially to be billed to the District or which Contractor has not paid, within thirty (30) days after District's receipt of billing.

Section 6. <u>INTENTIONALLY DELETED.</u>

Section 7. <u>NO INTERFERENCE WITH RAILROAD'S OPERATION AND SAFETY.</u>

The Project improvements on the Easement Property shall be kept in such condition, and all Project Work and subsequent use of and work performed within the Easement Property shall be performed in such manner, as to prevent any and all interference whatsoever with the constant, continuous and uninterrupted use of the tracks, property and facilities of the Railroad

CONFORMED

and/or Standard, and nothing shall be done or suffered to be done by the District or USACE at any time that would in any manner impair the safety thereof.

Section 8. PROTECTION OF FIBER OPTIC CABLE SYSTEMS.

a) Fiber optic cable systems may be buried on Standard's property and/or Railroad's property. Protection of the fiber optic cable systems is of extreme importance since any break could disrupt service to users resulting in business interruption and loss of revenue and profits. The District shall telephone the Railroad at 1-800-336-9193 (a 24-hour number) to determine if fiber optic cable is buried anywhere on the portion of Standard's property and/or Railroad's property to be used by the District. If it is, the District will telephone the telecommunications company(ies) involved, arrange for a cable locator, make arrangements for relocation or other protection of the fiber optic cable, and will commence no work on Standard's property and/or Railroad's property until all such protection or relocation has been accomplished.

b) In addition to other indemnity provisions in this Agreement, the District shall indemnify and hold Standard and Railroad harmless from and against all costs, liability and expense whatsoever (including, without limitation, attorneys' fees, court costs and expenses) arising out of any act or omission of the District, its Contractor, agents and/or employees, USACE or any of its Contractors, that causes or contributes to (1) any damage to or destruction of any telecommunications system on Standard's property and/or Railroad's property, and (2) any injury to or death of any person employed by or on behalf of any telecommunications company, and/or its contractor, agents and/or employees, on Standard's property and/or Railroad's property. The District shall not have or seek recourse against Standard or Railroad for any claim or cause of action for alleged loss of profits or revenue or loss of service or other consequential damage to a telecommunication company using Standard's property and/or Railroad's property or a customer or user of services of the fiber optic cable on Standard's property and/or Railroad's property.

Section 9. CLAIMS AND LIENS FOR LABOR AND MATERIAL; TAXES.

a) The District shall fully pay for all materials, work and labor placed or performed on Standard's property and/or Railroad's property in connection with the Project or Project Work, and shall not permit or suffer any mechanic's or material man's lien of any kind or nature to be enforced against Standard's property and/or Railroad's property for any labor performed, work done or materials furnished thereon at the instance or request or on behalf of the District. The District shall indemnify and hold harmless Standard and Railroad against and from any and all liens, claims, demands, costs and expenses of whatsoever nature in any way connected with or growing out of such work done, labor performed, or materials furnished.

b) The District shall promptly pay or discharge all taxes, charges and assessments levied upon, in respect to, or on account of the Project improvements, to prevent the same from becoming a charge or lien upon Standard property and/or Railroad property, and so that the taxes, charges and assessments levied upon or in respect to Standard's property and/or Railroad's property shall not be increased because of the location, construction or maintenance of any Project improvements placed upon Standard's property and/or Railroad's property, or on account

CONFORMED

of any District interest therein. Where such tax, charge or assessment may not be separately made or assessed to the District, but shall be included in the assessment of Standard's property and/or Railroad's property, then the District shall pay to Standard or Railroad, as applicable, an equitable proportion of such taxes, charges and assessments determined by the value of the District's property upon property of Standard and/or Railroad as compared with the entire value of such property.

Section 10. RESTORATION OF RAILROAD'S FENCES AND FACILITIES.

In the event Standard and/or Railroad authorizes the District to take down any fence of Standard and/or Railroad or in any manner move or disturb any other facility of Standard and/or Railroad in connection with the Project or the Project Work, then in that event the District shall, as soon as possible and at the District's sole expense, restore such fence and other facility to the same condition as the same were in before such fence was taken down or such other facility was moved or disturbed, and in addition to any other indemnification provision of this Agreement, the District shall indemnify and hold harmless Standard and/or Railroad (as applicable) and their officers, agents and employees, against and from any and all liability, loss, damages, claims, demands, costs and expenses of whatsoever nature, including court costs and attorneys' fees, which may result from injury to or death of persons whomsoever, or damage to or loss or destruction of property whatsoever, when such injury, death, damage, loss or destruction grows out of or arises from the taking down of any fence or the moving or disturbance of any other facility of Standard and/or Railroad, as applicable.

Section 11. INDEMNITY.

a) As used in this Section, "Railroad" includes Standard and other railroad companies using Standard's property and/or Railroad's property at or near the location of the Project improvements and their officers, agents, and employees; "**Loss**" includes loss, damage, claims, demands, actions, causes of action, penalties, costs, and expenses of whatsoever nature, including court costs and attorneys' fees, which may result from: (i) injury to or death of persons whomsoever (including without limitation the Railroad's, the District's, USACE's and any Contractor's officers, agents, and employees, as well as any other person); and (ii) damage to or loss or destruction of property whatsoever (including without limitation the District's property, any Contractor's property, adjacent property and crops, Railroad's roadbed, tracks, equipment, and other property, and property in Railroad's care or custody).

b) To the extent it may lawfully do so, the District agrees to assume the risk of loss or damage to the Project improvements and to defend, indemnify and hold harmless the Railroad from any Loss which is due to or arises from (i) the construction, operation, maintenance, repair, reconstruction, renewal, removal, modification, use or existence of the Project improvements and appurtenances thereto, or any part thereof, including without limitation any flow of water or flooding from, through or around the Project improvements, or (ii) failure of the District, USACE or any Contractor to comply with or perform any of the terms and conditions set forth in this Agreement; provided, however, that the foregoing indemnification provisions shall not apply to any claims, damages, costs and expenses that have been fully compensated for through the insurance coverage required of the District or Contractor by this Agreement. The foregoing

CONFORMED

indemnification provisions shall apply in all situations, including without limitation, situations where the Loss is caused in whole or part by Railroad's negligence, except to the extent that the Loss is caused by the sole and direct gross negligence or intentional misconduct of Railroad.

c) Any liability of any party hereunder to one of its employees under any Workers' Compensation Act or the Federal Employers' Liability Act shall not be questioned or in any way challenged by the other party, nor shall any jury or court findings, resulting from any employee's suit against either party pursuant to any such Act(s), be relied upon or used by either party in any attempt to assert common law liability against the other.

Section 12. COMPLIANCE WITH LAWS.

The District shall comply with, and shall cause USACE to comply with, all applicable federal, state and local laws, regulations and enactments affecting the Project and the Project Work. The District shall use only such methods as are consistent with the safety of the District, Contractor, Standard and Railroad, and their officers, agents, employees, Standard's property, Railroad's property, and the public in general. The District (without limiting the generality of the foregoing) shall comply, and shall cause USACE to comply, with all applicable state and federal occupational safety and health acts and regulations. All Federal Railroad Administration regulations shall be followed when activity or work is performed on Standard's property and/or Railroad's property. If any failure by the District to comply with, or cause compliance with, any such laws, regulations, and enactments, shall result in any fine, penalty, cost or charge being assessed, imposed or charged against Standard and/or Railroad, the District shall reimburse and indemnify Standard and/or Railroad for any such fine, penalty, cost or charge, including without limitation attorneys' fees, court costs and expenses. The District further agrees in the event of any such action, upon notice thereof being provided by Standard and/or Railroad, as applicable, to defend such action free of cost, charge, or expense to Standard and/or Railroad, respectively.

Section 13. SUPERVISION BY DISTRICT.

The District, at its sole expense, shall fully and closely supervise Project and all Project Work on Railroad's property. The District's responsibility for safe conduct and adequate policing and supervision is not lessened or otherwise affected by Railroad's approval of any plans (including the Plans), or by Railroad's performance of the Railroad Work or collaboration in performance of any Project Work, or by the presence of Railroad's personnel at or near the Project Area, or by the District's or a Contractor's compliance with any requests or recommendations made by Railroad's personnel.

Section 14. SCHEDULE OF PROJECT WORK AND WORK WINDOWS.

a) Following thirty (30) days prior written notice from the District to the Railroad thereof, the District, USACE (as applicable) and Railroad shall meet with Contractor after a contract is awarded for the Project and/or Project Work for the purpose of negotiating and establishing a schedule detailing the timing and duration of the Project Work phases and sequences, and detailing the number, timing, duration, and frequency of work windows, as applicable. A work window is a time period during which a track is taken out of service to

CONFORMED

accommodate the Project Work. No work shall be performed on Standard's property and/or Railroad's property in connection with the Project or the Project Work until a schedule has been approved by Railroad in writing. The District shall inform and shall cause USACE to inform (as applicable) Contractor that Contractor cannot perform any Project Work on Standard's property and/or Railroad's property until such schedule has been approved by Railroad in writing. If multiple tracks are present, the District agrees not to remove (and shall cause any Contractor performing any Project Work not to remove) from service all existing tracks at the work site at the same time unless agreed to by Railroad in the Approved Work Schedule (as defined below) or by the Railroad Representative. Without limiting the generality of the foregoing (and notwithstanding the reference in the Plans to a 72 hour outage), Railroad agrees to provide two limited work windows subject to the following additional limitations. Railroad will provide one (1) outage for the Trestle Structure for a period not to exceed sixty (60) hours, and one (1) outage for the Piedmont Structure for a period not to exceed ninety (90) days. With respect to the Trestle Structure work window, the District shall provide to Railroad prior written notice of its request to initiate the Trestle Structure work to allow the Railroad sufficient time to order the related track materials. Upon the earlier to occur of (i) Railroad's notice to the District that the related track materials are available for installation or (ii) one hundred twenty (120) days after Railroad receives the District's request to initiate the Trestle Structure work, the District may provide to Railroad written notice requesting the work window for the Trestle Structure. Following the Railroad's receipt of such request, the parties shall reasonably cooperate to identify the dates and times the work window will be made available to the District, which coordination shall include Railroad's removal of the existing trackage on the Trestle Structure. With respect to the Piedmont Structure work window, the District shall provide to Railroad prior written notice of its request to initiate the Piedmont Structure work to allow the Railroad sufficient time to order the related track materials. Upon the earlier to occur of (i) Railroad's notice to the District that the related track materials are available for installation or (ii) one hundred twenty (120) days after Railroad receives the District's request to initiate the Piedmont Structure work, the District may provide to Railroad written notice requesting the work window for the Piedmont Structure. Following the Railroad's receipt of such request, the parties shall reasonably cooperate to identify the dates and times the work window will be made available to the District, provided that such work window shall not be required to be provided less than forty-five (45) days after the Railroad receives the District's written request for the work window. The District acknowledges that the work windows include any time required for the Railroad to inspect the applicable structure to ensure that the same has been installed in compliance with the Plans and the other requirements contained in this Agreement. If the District fails to timely perform the Trestle Structure work as required herein, such that the applicable structure cannot be turned over to the Railroad on or before the expiration of the applicable work window with completed construction in accordance with the Plans, the District shall be required to pay damages equal to Ten Thousand and No/100 Dollars $10,000.00 per day until such issues are fully remedied to the reasonable satisfaction of the Railroad. The District further acknowledges that the determination of dates and times for the word windows are subject to a number of factors, including without limitation, availability of the Railroad's forces to perform its portion of the work, operating schedules, customer obligations and availability of materials, and may need to be rescheduled to due to the Railroad's forces being unavailable or for matters outside the reasonable control of the Railroad (including without limitation train derailments). All time

CONFORMED

periods set forth herein (excluding the work windows) shall be subject to reasonable extension for any events outside of the control of the Railroad.

b) Once a schedule setting forth the minimum number, duration and frequency of work windows is agreed to by the parties pursuant to Section 14(a) above, such schedule shall be deemed a component of the Plans. Any work windows requested by Contractor or the District beyond the minimums agreed upon by the parties shall be subject to Railroad's approval.

c) "**Approved Work Schedule**" means the agreed-to timing and duration of the various Project Work phases, sequences and work windows, approved in writing by both Contractor, the District, and/or USACE, as applicable, and Railroad and which is based on minimums agreed to by the parties pursuant to this Section 14, subject to modification, restriction, rescheduling, and canceling as permitted herein. Whenever the term Approved Work Schedule is used herein, it includes the work schedule as it has been modified, restricted, or rescheduled by Railroad after initial approval by both parties. Such Approved Work Schedule shall be deemed a component of the Plans.

d) The District agrees that it will strictly comply (and require USACE and any Contractors, as applicable, to strictly comply) with all Approved Work Schedules. The District agrees that the Project Work shall be performed only in the sequence and only within the window periods set forth in an Approved Work Schedule, unless otherwise directed or authorized by the Railroad Representative.

e) The District agrees that any Project Work may be restricted and rescheduled as Railroad deems appropriate or necessary to accommodate Railroad's operations or alleviate train or track congestion. The District agrees that Railroad shall have the right to restrict, modify or cancel an Approved Work Schedule on short written notice or oral notice in the field including, without limitation, on the day of a scheduled work window, due to railroad operations or congestion on Railroad's track at the work site or on other portions of Railroad's track system. However, Railroad will not unreasonably restrict or reschedule the Project Work, or unreasonably restrict, modify or cancel Approved Work Schedules, and Railroad will do so only as appropriate or necessary in connection with Railroad's common carrier obligations. The District hereby waives all claims against Railroad for all damages whatsoever related to Railroad restricting or rescheduling Project Work and/or canceling, restricting or modifying an Approved Work Schedule. In the event that an Approved Work Schedule is cancelled or otherwise modified so as to prevent the District from proceeding with the Project Work, Railroad shall propose an alternative Approved Work Schedule to the District for review and approval to accommodate the Project Work.

Section 15. <u>RAILROAD MAY SHUT DOWN WORK AND REMEDY DISRUPTION.</u>

a) Railroad, following short written notice or oral notice in the field to the District, USACE's contracting officer representative (if in connection with the initial construction of the Project improvements) and/or Contractor, as applicable, shall have the right to immediately shut down all Project Work on Standard's property and/or Railroad's property and require the removal

CONFORMED

of all persons, vehicles and equipment from such property without Railroad incurring any liability to the District, Contractor or any other person or entity, if a phase of Project Work:

i) has not been completed, or appears to Railroad that it cannot be completed, within a respective work window set forth in an Approved Work Schedule; or

ii) is being conducted in an unsafe manner, or in a manner that is inconsistent with or in breach of this Agreement; or

iii) is being conducted in a manner which violates government law, rules or regulations, including without limitation Federal Railroad Administration or Occupational Safety and Health Administration rules and regulations.

b) If any Project Work is shut down by Railroad pursuant to this Section 15, and Railroad's railway operating schedule is disrupted as a result, all subsequent work windows can be delayed or modified by Railroad until after Railroad fully recovers its railway operating schedule, at Railroad's sole discretion.

c) In the event that the Project Work is shut down by Railroad pursuant to this Section 15, Railroad shall propose an alternative Approved Work Schedule to the District and/or USACE, as applicable, for review and approval to accommodate the Project Work. Any such Approved Work Schedule proposed by Railroad and approved hereunder shall not take effect until the District has modified or corrected its work procedures in such a manner to ensure the District can complete its work in strict compliance with an Approved Work Schedule.

d) The District agrees that if the District, USACE or any of their Contractors are unable or appears not likely to quickly remedy any disruption to Railroad's operations beyond any authorized work window pursuant to an Approved Work Schedule, then Railroad, at the District's expense, has the right (but not the obligation) to immediately use Railroad's personnel and equipment (or contracted personnel and equipment) to remedy or reduce the disruption.

Section 16. <u>SITE TO BE LEFT NEAT AND CLEAN.</u>

Upon completion of Project and any Project Work, the District shall remove from Standard's property and Railroad's property, as applicable, all machinery, equipment, temporary structures, debris and rubbish related to the Project Work and leave such property in a neat and clean condition satisfactory to Railroad.

Section 17. <u>RAILROAD NOT TO BEAR ANY COST.</u>

It is expressly made a condition of this Agreement that neither Railroad nor Standard is obligated to bear any costs (whether direct or indirect) with respect to the Project and/or any Project Work.

CONFORMED

Section 18. WAIVER OF BREACH.

The waiver by Standard or Railroad of the breach of any term, condition, or covenant herein contained to be kept, observed and performed by the District shall in no way impair the right of Standard or Railroad, as applicable, to avail itself of any remedy for any subsequent breach thereof.

Section 19. AGREEMENT NOT TO BE ASSIGNED.

The District shall not assign this Agreement, in whole or in part, or any rights herein granted, without the written consent of Standard and Railroad, and it is agreed that any transfer or assignment or attempted transfer or assignment of this Agreement or any of the rights herein granted, whether voluntary, by operation of law, or otherwise, without such consent in writing, shall be absolutely void and, at the option of Standard and Railroad, shall terminate this Agreement.

Section 20. SUCCESSORS AND ASSIGNS.

Subject to the provisions of Section 19 hereof, this Agreement shall be binding upon and inure to the benefit of the parties hereto, their heirs, executors, administrators, successors and assigns.

Section 21. NOTICES.

Any notices required or desired to be given under this Agreement shall be in writing and personally served, given by overnight express delivery, or given by mail. Telecopy notices shall be deemed valid only to the extent they are (a) actually received by the individual to whom addressed and (b) followed by delivery of actual notice in the manner described above within three (3) business days thereafter. Any notice given by mail shall be sent, postage prepaid, by certified mail, return receipt requested, addressed to the party to receive at the following address or at such other address as such party may from time to time direct in writing:

Railroad:	UNION PACIFIC RAILROAD COMPANY ATTN: Assistant Vice President – Real Estate 1400 Douglas Street, Mail Stop 1690 Omaha, Nebraska 68179
Standard:	c/o UNION PACIFIC RAILROAD COMPANY ATTN: Assistant Vice President – Real Estate 1400 Douglas Street, Mail Stop 1690 Omaha, Nebraska 68179
District:	SANTA CLARA VALLEY WATER DISTRICT ATTN: CLERK OF THE BOARD 5750 Almaden Expressway San Jose, California 95118-3686

CONFORMED

Express delivery notices shall be deemed to be given upon receipt. Postal notices shall be deemed to be given upon deposit with the United States Postal Service.

CONFORMED

EXHIBIT C

TO CHANNEL IMPROVEMENT CONSTRUCTION & MAINTENANCE AGREEMENT

Form of Contractor's Right of Entry Agreement

(see attached)

CONFORMED

CONTRACTOR'S
RIGHT OF ENTRY AGREEMENT

THIS AGREEMENT (this "Agreement") is made and entered into as of the _____ day of _____, 20_____,
by and between **UNION PACIFIC RAILROAD COMPANY**, a Delaware corporation ("Railroad"); and _____, a _____ corporation ("Contractor").

RECITALS:

Contractor has been hired by _____ to perform work relating to the Santa Clara Valley Water District Channel Improvement Project (the "work"), with all or a portion of such work to be performed on property of Railroad in the vicinity of Railroad's Milepost 10.69 to 12.19 on Railroad's Milpitas Industrial Lead located at or near Milpitas in Santa Clara County, State of California as such location is in the general location shown on the print marked **Exhibit A**, attached hereto and hereby made a part hereof, which work is the subject of a contract dated May 27th, 2016 between Railroad and Santa Clara Valley Water District.

Railroad is willing to permit Contractor to perform the work described above at the location described above subject to the terms and conditions contained in this Agreement

AGREEMENT:

NOW, THEREFORE, it is mutually agreed by and between Railroad and Contractor, as follows:

ARTICLE 1 - DEFINITION OF CONTRACTOR.

For purposes of this Agreement, all references in this agreement to Contractor shall include Contractor's contractors, subcontractors, officers, agents and employees, and others acting under its or their authority.

ARTICLE 2 - RIGHT GRANTED; PURPOSE.

Railroad hereby grants to Contractor the right, during the term hereinafter stated and upon and subject to each and all of the terms, provisions and conditions herein contained, to enter upon and have ingress to and egress from the property described in the Recitals for the purpose of performing the work described in the Recitals above. The right herein granted to Contractor is limited to those portions of Railroad's property specifically described herein, or as designated by the Railroad Representative named in Article 4.

ARTICLE 3 - TERMS AND CONDITIONS CONTAINED IN EXHIBITS B, C AND D.

The terms and conditions contained in **Exhibit B, Exhibit C** and **Exhibit D**, attached hereto, are hereby made a part of this Agreement.

ARTICLE 4 - ALL EXPENSES TO BE BORNE BY CONTRACTOR; RAILROAD REPRESENTATIVE.

A. Contractor shall bear any and all costs and expenses associated with any work performed by Contractor, or any costs or expenses incurred by Railroad relating to this Agreement.

CONFORMED

B. Contractor shall coordinate all of its work with the following Railroad representative or his or her duly authorized representative (the "Railroad Representative"):

ROBERT J. BRENNAN
MGR TRACK MNTCE
37950 Central Court, Ste B
Newark, CA 94560
rjbrenna@up.com
Work Phone: 402 501-3774
Cell Phone: 402 594-5960

C. Contractor, at its own expense, shall adequately police and supervise all work to be performed by Contractor and shall ensure that such work is performed in a safe manner as set forth in Section 7 of **Exhibit B**. The responsibility of Contractor for safe conduct and adequate policing and supervision of Contractor's work shall not be lessened or otherwise affected by Railroad's approval of plans and specifications involving the work, or by Railroad's collaboration in performance of any work, or by the presence at the work site of a Railroad Representative, or by compliance by Contractor with any requests or recommendations made by Railroad Representative.

ARTICLE 5 - SCHEDULE OF WORK ON A MONTHLY BASIS.

The Contractor, at its expense, shall provide on a monthly basis a detailed schedule of work to the Railroad Representative named in Article 4B above. The reports shall start at the execution of this Agreement and continue until this Agreement is terminated as provided in this Agreement or until the Contractor has completed all work on Railroad's property.

ARTICLE 6 - TERM; TERMINATION.

A. The grant of right herein made to Contractor shall commence on the date of this Agreement, and continue until _____, unless sooner terminated as herein provided, or at such time as Contractor has completed its work on Railroad's property, whichever is earlier. Contractor agrees to notify the Railroad Representative in writing when it has completed its work on Railroad's property.

B. This Agreement may be terminated by either party on ten (10) days written notice to the other party.

ARTICLE 7 - CERTIFICATE OF INSURANCE.

A. Before commencing any work, Contractor will provide Railroad with the (i) insurance binders, policies, certificates and endorsements set forth in **Exhibit C** of this Agreement, and (ii) the insurance endorsements obtained by each subcontractor as required under Section 12 of **Exhibit B** of this Agreement.

B. All insurance correspondence, binders, policies, certificates and endorsements shall be sent to:

Union Pacific Railroad Company
Real Estate Department
1400 Douglas Street, Mail Stop 1690
Omaha, NE 68179-1690
Attn: UPRR Folder No. 02967-19

ARTICLE 8 - DISMISSAL OF CONTRACTOR'S EMPLOYEE.

At the request of Railroad, Contractor shall remove from Railroad's property any employee of

CONFORMED

Contractor who fails to conform to the instructions of the Railroad Representative in connection with the work on Railroad's property, and any right of Contractor shall be suspended until such removal has occurred. Contractor shall indemnify Railroad against any claims arising from the removal of any such employee from Railroad's property.

ARTICLE 9- <u>ADMINISTRATIVE FEE</u>.

Upon the execution and delivery of this Agreement, Contractor shall pay to Railroad Five Hundred Dollars ($500.00) as reimbursement for clerical, administrative and handling expenses in connection with the processing of this Agreement.

ARTICLE 10 - <u>CROSSINGS; COMPLIANCE WITH MUTCD AND FRA GUIDELINES.</u>

A. No additional vehicular crossings (including temporary haul roads) or pedestrian crossings over Railroad's trackage shall be installed or used by Contractor without the prior written permission of Railroad.

B. Any permanent or temporary changes, including temporary traffic control, to crossings must conform to the Manual of Uniform Traffic Control Devices (MUTCD) and any applicable Federal Railroad Administration rules, regulations and guidelines, and must be reviewed by the Railroad prior to any changes being implemented. In the event the Railroad is found to be out of compliance with federal safety regulations due to the Contractor's modifications, negligence, or any other reason arising from the Contractor's presence on the Railroad's property, the Contractor agrees to assume liability for any civil penalties imposed upon the Railroad for such noncompliance.

ARTICLE 11.- <u>EXPLOSIVES</u>.

Explosives or other highly flammable substances shall not be stored or used on Railroad's property without the prior written approval of Railroad.

IN WITNESS WHEREOF, the parties hereto have duly executed this agreement in duplicate as of the date first herein written.

UNION PACIFIC RAILROAD COMPANY

By:_____
Title:_____

_____
(Name of Contractor)

By:_____
Title:_____

CONFORMED

EXHIBIT A
TO
CONTRACTOR'S RIGHT OF ENTRY AGREEMENT

Exhibit A will be a print showing the general location of the work site.

CONFORMED

PARCEL #2 = 0.23 ACRES / 9,976 S.F.
PARCEL #1 = 0.38 ACRES / 16,742 S.F.
PARCEL #4 = 0.03 ACRES / 1,341 S.F.
PARCEL #5 = 0.14 ACRES / 6,230 S.F.
TEMPORARY LICENSE AREAS
PIEDMONT STRUCTURE
PARCEL #7 = 0.29 ACRES / 12,746 S.F.
PARCEL #6 = 0.11 ACRES / 4,800 S.F.
YOSEMITE
AMES
PIEDMONT
WRIGLEY
CREEK
DRIVE
MILPITAS
BLVD
TOWN CENTER
LINCOLN PROPERTIES
SIERRA CHEMICAL CO
MERITEX CHEMICAL CO
CONTINENTAL
EVARD
CAPITOL EXPY
LEGEND:
EASEMENT AREA
TEMPORARY LICENSE AREA
BRIDGE STRUCTURE
RESTATED EASEMENTS
UPRRCO. R/W OUTLINED
CADD FILENAME 0296719.DGN
SCAN FILENAME 0296719-CA45840.TIF
NOTE: BEFORE YOU BEGIN ANY WORK, SEE AGREEMENT FOR FIBER OPTIC PROVISIONS.
EXHIBIT "A"
PROJECT AREA
UNION PACIFIC RAILROAD COMPANY
MILPITAS, SANTA CLARA COUNTY, CA
M.P. 10.69 TO 12.19 – MILPITAS INDUSTRIAL LEAD
TO ACCOMPANY AGREEMENT WITH
SANTA CLARA VALLEY WATER DISTRICT
MP V-12 / 4
SCALE: 1" = 200'
OFFICE OF REAL ESTATE
OMAHA, NEBRASKA DATE: 5-23-2016
COB FILE: 2967-19

CONFORMED

EXHIBIT B
TO
CONTRACTOR'S RIGHT OF ENTRY AGREEMENT

Section 1. NOTICE OF COMMENCEMENT OF WORK - FLAGGING.

A. Contractor agrees to notify the Railroad Representative at least ten (10) working days in advance of Contractor commencing its work and at least thirty (30) working days in advance of proposed performance of any work by Contractor in which any person or equipment will be within twenty-five (25) feet of any track, or will be near enough to any track that any equipment extension (such as, but not limited to, a crane boom) will reach to within twenty-five (25) feet of any track. No work of any kind shall be performed, and no person, equipment, machinery, tool(s), material(s), vehicle(s), or thing(s) shall be located, operated, placed, or stored within twenty-five (25) feet of any of Railroad's track(s) at any time, for any reason, unless and until a Railroad flagman is provided to watch for trains. Upon receipt of such thirty (30)-day notice, the Railroad Representative will determine and inform Contractor whether a flagman need be present and whether Contractor needs to implement any special protective or safety measures. If flagging or other special protective or safety measures are performed by Railroad, Railroad will bill Contractor for such expenses incurred by Railroad, unless Railroad and a federal, state or local governmental entity have agreed that Railroad is to bill such expenses to the federal, state or local governmental entity. If Railroad will be sending the bills to Contractor, Contractor shall pay such bills within thirty (30) days of Contractor's receipt of billing. If Railroad performs any flagging, or other special protective or safety measures are performed by Railroad, Contractor agrees that Contractor is not relieved of any of its responsibilities or liabilities set forth in this Agreement.

B. The rate of pay per hour for each flagman will be the prevailing hourly rate in effect for an eight-hour day for the class of flagmen used during regularly assigned hours and overtime in accordance with Labor Agreements and Schedules in effect at the time the work is performed. In addition to the cost of such labor, a composite charge for vacation, holiday, health and welfare, supplemental sickness, Railroad Retirement and unemployment compensation, supplemental pension, Employees Liability and Property Damage and Administration will be included, computed on actual payroll. The composite charge will be the prevailing composite charge in effect at the time the work is performed. One and one-half times the current hourly rate is paid for overtime, Saturdays and Sundays, and two and one-half times current hourly rate for holidays. Wage rates are subject to change, at any time, by law or by agreement between Railroad and its employees, and may be retroactive as a result of negotiations or a ruling of an authorized governmental agency. Additional charges on labor are also subject to change. If the wage rate or additional charges are changed, Contractor (or the governmental entity, as applicable) shall pay on the basis of the new rates and charges.

C. Reimbursement to Railroad will be required covering the full eight-hour day during which any flagman is furnished, unless the flagman can be assigned to other Railroad work during a portion of such day, in which event reimbursement will not be required for the portion of the day during which the flagman is engaged in other Railroad work. Reimbursement will also be required for any day not actually worked by the flagman following the flagman's assignment to work on the project for which Railroad is required to pay the flagman and which could not reasonably be avoided by Railroad by assignment of such flagman to other work, even though Contractor may not be working during such time. When it becomes necessary for Railroad to bulletin and assign an employee to a flagging position in compliance with union collective bargaining agreements, Contractor must provide Railroad a minimum of five (5) days notice prior to the cessation of the need for a flagman. If five (5) days notice of cessation is not given, Contractor will still be required to pay flagging charges for the five (5) day notice period required by union agreement to be given to the employee, even though flagging is not required for that period. An additional thirty (30) days notice must then be given to Railroad if flagging services are needed again after such five day cessation notice has been given to Railroad.

CONFORMED

Section 2. LIMITATION AND SUBORDINATION OF RIGHTS GRANTED

A. The foregoing grant of right is subject and subordinate to the prior and continuing right and obligation of the Railroad to use and maintain its entire property including the right and power of Railroad to construct, maintain, repair, renew, use, operate, change, modify or relocate railroad tracks, roadways, signal, communication, fiber optics, or other wirelines, pipelines and other facilities upon, along or across any or all parts of its property, all or any of which may be freely done at any time or times by Railroad without liability to Contractor or to any other party for compensation or damages.

B. The foregoing grant is also subject to all outstanding superior rights (whether recorded or unrecorded and including those in favor of licensees and lessees of Railroad's property, and others) and the right of Railroad to renew and extend the same, and is made without covenant of title or for quiet enjoyment.

Section 3. NO INTERFERENCE WITH OPERATIONS OF RAILROAD AND ITS TENANTS.

A. Contractor shall conduct its operations so as not to interfere with the continuous and uninterrupted use and operation of the railroad tracks and property of Railroad, including without limitation, the operations of Railroad's lessees, licensees or others, unless specifically authorized in advance by the Railroad Representative. Nothing shall be done or permitted to be done by Contractor at any time that would in any manner impair the safety of such operations. Railroad shall be reimbursed by Contractor for train delay costs and lost revenue claims due to any delays or interruption of train operations resulting from Contractor's work or other activities. When not in use, Contractor's machinery and materials shall be kept at least fifty (50) feet from the centerline of Railroad's nearest track, and there shall be no vehicular crossings of Railroads tracks except at existing open public crossings.

B. Operations of Railroad and work performed by Railroad personnel and delays in the work to be performed by Contractor caused by such railroad operations and work are expected by Contractor, and Contractor agrees that Railroad shall have no liability to Contractor, or any other person or entity for any such delays. The Contractor shall coordinate its activities with those of Railroad and third parties so as to avoid interference with railroad operations. The safe operation of Railroad train movements and other activities by Railroad takes precedence over any work to be performed by Contractor.

Section 4. LIENS.

Contractor shall pay in full all persons who perform labor or provide materials for the work to be performed by Contractor. Contractor shall not create, permit or suffer any mechanic's or materialmen's liens of any kind or nature to be created or enforced against any property of Railroad for any such work performed. Contractor shall indemnify and hold harmless Railroad from and against any and all liens, claims, demands, costs or expenses of whatsoever nature in any way connected with or growing out of such work done, labor performed, or materials furnished. If Contractor fails to promptly cause any lien to be released of record, Railroad may, at its election, discharge the lien or claim of lien at Contractor's expense.

Section 5. PROTECTION OF FIBER OPTIC CABLE SYSTEMS.

A. Fiber optic cable systems may be buried on Railroad's property. Protection of the fiber optic cable systems is of extreme importance since any break could disrupt service to users resulting in business interruption and loss of revenue and profits. Contractor shall telephone Railroad during normal business hours (7:00 a.m. to 9:00 p.m. Central Time, Monday through Friday, except holidays) at 1-800-336-9193 (also a 24-hour, 7-day number for emergency calls) to determine if fiber optic cable is buried anywhere on Railroad's property to be used by Contractor. If it is, Contractor will telephone the telecommunications company(ies) involved, make arrangements for a cable locator and, if applicable, for relocation or other protection of the fiber optic cable. Contractor shall not commence any work until all such protection or relocation (if applicable) has been accomplished.

CONFORMED

b. In addition to other indemnity provisions in this Agreement, Contractor shall indemnify, defend and hold Railroad harmless from and against all costs, liability and expense whatsoever (including, without limitation, attorneys' fees, court costs and expenses) arising out of any act or omission of Contractor, its agents and/or employees, that causes or contributes to (1) any damage to or destruction of any telecommunications system on Railroad's property, and/or (2) any injury to or death of any person employed by or on behalf of any telecommunications company, and/or its contractor, agents and/or employees, on Railroad's property. Contractor shall not have or seek recourse against Railroad for any claim or cause of action for alleged loss of profits or revenue or loss of service or other consequential damage to a telecommunication company using Railroad's property or a customer or user of services of the fiber optic cable on Railroad's property.

Section 6. PERMITS - COMPLIANCE WITH LAWS.

In the prosecution of the work covered by this Agreement, Contractor shall secure any and all necessary permits and shall comply with all applicable federal, state and local laws, regulations and enactments affecting the work including, without limitation, all applicable Federal Railroad Administration regulations.

Section 7. SAFETY.

A. Safety of personnel, property, rail operations and the public is of paramount importance in the prosecution of the work performed by Contractor. Contractor shall be responsible for initiating, maintaining and supervising all safety, operations and programs in connection with the work. Contractor shall at a minimum comply with Railroad's safety standards listed in **Exhibit D**, hereto attached, to ensure uniformity with the safety standards followed by Railroad's own forces. As a part of Contractor's safety responsibilities, Contractor shall notify Railroad if Contractor determines that any of Railroad's safety standards are contrary to good safety practices. Contractor shall furnish copies of **Exhibit D** to each of its employees before they enter the job site.

B. Without limitation of the provisions of paragraph A above, Contractor shall keep the job site free from safety and health hazards and ensure that its employees are competent and adequately trained in all safety and health aspects of the job.

C. Contractor shall have proper first aid supplies available on the job site so that prompt first aid services may be provided to any person injured on the job site. Contractor shall promptly notify Railroad of any U.S. Occupational Safety and Health Administration reportable injuries. Contractor shall have a nondelegable duty to control its employees while they are on the job site or any other property of Railroad, and to be certain they do not use, be under the influence of, or have in their possession any alcoholic beverage, drug or other substance that may inhibit the safe performance of any work.

D. If and when requested by Railroad, Contractor shall deliver to Railroad a copy of Contractor's safety plan for conducting the work (the "Safety Plan"). Railroad shall have the right, but not the obligation, to require Contractor to correct any deficiencies in the Safety Plan. The terms of this Agreement shall control if there are any inconsistencies between this Agreement and the Safety Plan.

Section 8. INDEMNITY.

A. To the extent not prohibited by applicable statute, Contractor shall indemnify, defend and hold harmless Railroad, its affiliates, and its and their officers, agents and employees (individually an "Indemnified Party" or collectively "Indemnified Parties") from and against any and all loss, damage, injury, liability, claim, demand, cost or expense (including, without limitation, attorney's, consultant's and expert's fees, and court costs), fine or penalty (collectively, "Loss") incurred by any person (including, without limitation, any Indemnified Party, Contractor, or any employee of Contractor or of any Indemnified Party) arising out of or in any manner connected with (i) any work performed by Contractor, or (ii) any act or omission of Contractor, its officers, agents or employees, or (iii) any breach of this Agreement by Contractor.

CONFORMED

b. The right to indemnity under this Section 8 shall accrue upon occurrence of the event giving rise to the Loss, and shall apply regardless of any negligence or strict liability of any Indemnified Party, except where the Loss is caused by the sole active negligence of an Indemnified Party as established by the final judgment of a court of competent jurisdiction. The sole active negligence of any Indemnified Party shall not bar the recovery of any other Indemnified Party.

c. Contractor expressly and specifically assumes potential liability under this Section 8 for claims or actions brought by Contractor's own employees. Contractor waives any immunity it may have under worker's compensation or industrial insurance acts to indemnify the Indemnified Parties under this Section 8. Contractor acknowledges that this waiver was mutually negotiated by the parties hereto.

d. No court or jury findings in any employee's suit pursuant to any worker's compensation act or the Federal Employers' Liability Act against a party to this Agreement may be relied upon or used by Contractor in any attempt to assert liability against any Indemnified Party.

e. The provisions of this Section 8 shall survive the completion of any work performed by Contractor or the termination or expiration of this Agreement. In no event shall this Section 8 or any other provision of this Agreement be deemed to limit any liability Contractor may have to any Indemnified Party by statute or under common law.

Section 9. RESTORATION OF PROPERTY.

In the event Railroad authorizes Contractor to take down any fence of Railroad or in any manner move or disturb any of the other property of Railroad in connection with the work to be performed by Contractor, then in that event Contractor shall, as soon as possible and at Contractor's sole expense, restore such fence and other property to the same condition as the same were in before such fence was taken down or such other property was moved or disturbed. Contractor shall remove all of Contractor's tools, equipment, rubbish and other materials from Railroad's property promptly upon completion of the work, restoring Railroad's property to the same state and condition as when Contractor entered thereon.

Section 10. WAIVER OF DEFAULT.

Waiver by Railroad of any breach or default of any condition, covenant or agreement herein contained to be kept, observed and performed by Contractor shall in no way impair the right of Railroad to avail itself of any remedy for any subsequent breach or default.

Section 11. MODIFICATION - ENTIRE AGREEMENT.

No modification of this Agreement shall be effective unless made in writing and signed by Contractor and Railroad. This Agreement and the exhibits attached hereto and made a part hereof constitute the entire understanding between Contractor and Railroad and cancel and supersede any prior negotiations, understandings or agreements, whether written or oral, with respect to the work to be performed by Contractor.

Section 12. ASSIGNMENT - SUBCONTRACTING.

Contractor shall not assign or subcontract this Agreement, or any interest therein, without the written consent of the Railroad. Contractor shall be responsible for the acts and omissions of all subcontractors. Before Contractor commences any work, the Contractor shall, except to the extent prohibited by law; (1) require each of its subcontractors to include the Contractor as "Additional Insured" in the subcontractor's Commercial General Liability policy and Business Automobile policies with respect to all liabilities arising out of the subcontractor's performance of work on behalf of the Contractor by endorsing these policies with ISO Additional Insured Endorsements CG 20 26, and CA 20 48 (or substitute forms providing equivalent coverage; (2) require each of its subcontractors to endorse their Commercial General Liability Policy with "Contractual Liability Railroads" ISO Form CG 24 17 10 01 (or a

CONFORMED

substitute form providing equivalent coverage) for the job site; and (3) require each of its subcontractors to endorse their Business Automobile Policy with "Coverage For Certain Operations In Connection With Railroads" ISO Form CA 20 70 10 01 (or a substitute form providing equivalent coverage) for the job site.

CONFORMED

EXHIBIT C
TO
CONTRACTOR'S
RIGHT OF ENTRY AGREEMENT

Union Pacific Railroad Company
Insurance Provisions For
Contractor's Right of Entry Agreement

Section 1. REQUIRED INSURANCE.

Contractor shall, at its sole cost and expense, procure and maintain in effect during the entire term of this Agreement the following insurance coverage.

A. **Commercial General Liability** insurance. Commercial general liability (CGL) with a limit of not less than $5,000,000 each occurrence and an aggregate limit of not less than $10,000,000. CGL insurance must be written on ISO occurrence form CG 00 01 12 04 (or a substitute form providing equivalent coverage).

The policy must also contain the following endorsement, which must be stated on the certificate of insurance:

- Contractual Liability Railroads ISO form CG 24 17 10 01 (or a substitute form providing equivalent coverage) showing "Union Pacific Railroad Company Property" as the Designated Job Site.

B. **Business Automobile Coverage** insurance. Business auto coverage written on ISO form CA 00 01 (or a substitute form providing equivalent liability coverage) with a combined single limit of not less $2,000,000 for each accident.

The policy must contain the following endorsements, which must be stated on the certificate of insurance:

- Coverage For Certain Operations In Connection With Railroads ISO form CA 20 70 10 01 (or a substitute form providing equivalent coverage) showing "Union Pacific Property" as the Designated Job Site.
- Motor Carrier Act Endorsement - Hazardous materials clean up (MCS-90) if required by law.

C. **Workers' Compensation and Employers' Liability** insurance. Coverage must include but not be limited to:

- Contractor's statutory liability under the workers' compensation laws of the state where the Premises is located.
- Employers' Liability (Part B) with limits of at least $500,000 each accident, $500,000 disease policy limit $500,000 each employee.

If Contractor is self-insured, evidence of state approval and excess workers compensation coverage must be provided. Coverage must include liability arising out of the U.S. Longshoremen's and Harbor Workers' Act, the Jones Act, and the Outer Continental Shelf Land Act, if applicable.

D. **Railroad Protective Liability** insurance. Railroad Protective Liability insurance written on ISO occurrence form CG 00 35 12 04 (or a substitute form providing equivalent coverage) on behalf of Railroad as named insured, with a limit of not less than $2,000,000 per occurrence and an aggregate of $6,000,000. A binder stating the policy is in place must be submitted to Railroad before the work may be commenced and until the original policy is forwarded to Railroad.

CONFORMED

E. **Umbrella or Excess** insurance. If Contractor utilizes umbrella or excess policies, these policies must "follow form" and afford no less coverage than the primary policy.

Section 2. OTHER INSURANCE REQUIREMENTS.

A. All policy(ies) required above (except business automobile, workers' compensation and employers' liability) must include Railroad as "Additional Insured" using ISO Additional Insured Endorsement CG 20 26 (or substitute form(s) providing equivalent coverage). The coverage provided to Railroad as additional insured shall not be limited by Contractor's liability under the indemnity provisions of this Agreement. BOTH CONTRACTOR AND RAILROAD EXPECT THAT UNION PACIFIC RAILROAD COMPANY WILL BE PROVIDED WITH THE BROADEST POSSIBLE COVERAGE AVAILABLE BY OPERATION OF LAW UNDER ISO ADDITIONAL INSURED FORM CG 20 26.

B. [Intentionally omitted.]

C. Contractor waives all rights against Railroad and its agents, officers, directors and employees, where permitted by law, for recovery of damages to the extent these damages are covered by the workers compensation and employers liability or commercial umbrella/excess liability insurance obtained by Contractor required by this Agreement, which must be stated on the certificate of insurance.

D. Prior to commencing any work, Contractor shall furnish Railroad with a certificate(s) of insurance, executed by a duly authorized representative of each insurer, showing compliance with the insurance requirements in this Agreement.

E. All insurance policies must be written by a reputable insurance company acceptable to Railroad or with a current Best's Insurance Guide Rating of A- and Class VII or better, and authorized to do business in the state in which the Premises is located.

F. The fact that insurance is obtained by Contractor, or by Railroad on behalf of Contractor, will not be deemed to release or diminish the liability of Contractor, including, without limitation, liability under the indemnity provisions of this Agreement. Damages recoverable by Railroad from Contractor or any third party will not be limited by the amount of the required insurance coverage.

CONFORMED

EXHIBIT D
TO
CONTRACTOR'S RIGHT OF ENTRY AGREEMENT

MINIMUM SAFETY REQUIREMENTS

The term "employees" as used herein refer to all employees of Contractor as well as all employees of any subcontractor or agent of Contractor.

I. Clothing

A. All employees of Contractor will be suitably dressed to perform their duties safely and in a manner that will not interfere with their vision, hearing, or free use of their hands or feet.

Specifically, Contractor's employees must wear:

(i) Waist-length shirts with sleeves.
(ii) Trousers that cover the entire leg. If flare-legged trousers are worn, the trouser bottoms must be tied to prevent catching.
(iii) Footwear that covers their ankles and has a defined heel. Employees working on bridges are required to wear safety-toed footwear that conforms to the American National Standards Institute (ANSI) and FRA footwear requirements.

B. Employees shall not wear boots (other than work boots), sandals, canvas-type shoes, or other shoes that have thin soles or heels that are higher than normal.

C. Employees must not wear loose or ragged clothing, neckties, finger rings, or other loose jewelry while operating or working on machinery.

II. Personal Protective Equipment

Contractor shall require its employees to wear personal protective equipment as specified by Railroad rules, regulations, or recommended or requested by the Railroad Representative.

(i) Hard hat that meets the American National Standard (ANSI) Z89.1 – latest revision. Hard hats should be affixed with Contractor's company logo or name.
(ii) Eye protection that meets American National Standard (ANSI) for occupational and educational eye and face protection, Z87.1 – latest revision. Additional eye protection must be provided to meet specific job situations such as welding, grinding, etc.
(iii) Hearing protection, which affords enough attenuation to give protection from noise levels that will be occurring on the job site. Hearing protection, in the form of plugs or muffs, must be worn when employees are within:

- 100 feet of a locomotive or roadway/work equipment
- 15 feet of power operated tools
- 150 feet of jet blowers or pile drivers
- 150 feet of retarders in use (when within 10 feet, employees must wear dual ear protection – plugs and muffs)
-

(iv) Other types of personal protective equipment, such as respirators, fall protection equipment, and face shields, must be worn as recommended or requested by the Railroad Representative.

CONFORMED

III. On Track Safety

Contractor is responsible for compliance with the Federal Railroad Administration's Roadway Worker Protection regulations – 49CFR214, Subpart C and Railroad's On-Track Safety rules. Under 49CFR214, Subpart C, railroad contractors are responsible for the training of their employees on such regulations. In addition to the instructions contained in Roadway Worker Protection regulations, all employees must:

(i) Maintain a distance of twenty-five (25) feet to any track unless the Railroad Representative is present to authorize movements.
(ii) Wear an orange, reflectorized workwear approved by the Railroad Representative.
(iii) Participate in a job briefing that will specify the type of On-Track Safety for the type of work being performed. Contractor must take special note of limits of track authority, which tracks may or may not be fouled, and clearing the track. Contractor will also receive special instructions relating to the work zone around machines and minimum distances between machines while working or traveling.

IV. Equipment

A. It is the responsibility of Contractor to ensure that all equipment is in a safe condition to operate. If, in the opinion of the Railroad Representative, any of Contractor's equipment is unsafe for use, Contractor shall remove such equipment from Railroad's property. In addition, Contractor must ensure that the operators of all equipment are properly trained and competent in the safe operation of the equipment. In addition, operators must be:

- Familiar and comply with Railroad's rules on lockout/tagout of equipment.
- Trained in and comply with the applicable operating rules if operating any hy-rail equipment on-track.
- Trained in and comply with the applicable air brake rules if operating any equipment that moves rail cars or any other railbound equipment.

B. All self-propelled equipment must be equipped with a first-aid kit, fire extinguisher, and audible back-up warning device.

C. Unless otherwise authorized by the Railroad Representative, all equipment must be parked a minimum of twenty-five (25) feet from any track. Before leaving any equipment unattended, the operator must stop the engine and properly secure the equipment against movement.

D. Cranes must be equipped with three orange cones that will be used to mark the working area of the crane and the minimum clearances to overhead powerlines.

V. General Safety Requirements

A. Contractor shall ensure that all waste is properly disposed of in accordance with applicable federal and state regulations.

B. Contractor shall ensure that all employees participate in and comply with a job briefing conducted by the Railroad Representative, if applicable. During this briefing, the Railroad Representative will specify safe work procedures, (including On-Track Safety) and the potential hazards of the job. If any employee has any questions or concerns about the work, the employee must voice them during the job briefing. Additional job briefings will be conducted during the work as conditions, work procedures, or personnel change.

C. All track work performed by Contractor meets the minimum safety requirements established by the Federal Railroad Administration's Track Safety Standards 49CFR213.

CONFORMED

D. All employees comply with the following safety procedures when working around any railroad track:

(i) Always be on the alert for moving equipment. Employees must always expect movement on any track, at any time, in either direction.
(ii) Do not step or walk on the top of the rail, frog, switches, guard rails, or other track components.
(iii) In passing around the ends of standing cars, engines, roadway machines or work equipment, leave at least 20 feet between yourself and the end of the equipment. Do not go between pieces of equipment of the opening is less than one car length (50 feet).
(iv) Avoid walking or standing on a track unless so authorized by the employee in charge.
(v) Before stepping over or crossing tracks, look in both directions first.
(vi) Do not sit on, lie under, or cross between cars except as required in the performance of your duties and only when track and equipment have been protected against movement.

E. All employees must comply with all federal and state regulations concerning workplace safety.

CONFORMED

EXHIBIT D

TO CHANNEL IMPROVEMENT CONSTRUCTION & MAINTENANCE AGREEMENT

Section 1. SELF INSURANCE.

The District may self-insure all or a portion of the insurance coverage required by Section 2 of Exhibit D below, subject to Railroad's review and written approval of the District's Declaration of Self-Insurance (in the form of a letter from the District's Finance Department) certifying to Railroad that such risks are adequately covered by the financial resources of the District. The Railroad Protective Liability insurance required by Paragraph D of Section 2 below may not be self-insured.

Section 2. REQUIRED INSURANCE.

The District shall, at its sole cost and expense, (except for Railroad Protective Liability Insurance required in Paragraph D), procure and maintain in effect during the entire term of this Agreement the following insurance coverage. The District shall procure and maintain, or cause to be procured and maintained by its Contractor, at its sole cost and expense, Railroad Protective Liability Insurance coverage described in Paragraph D during any period of construction, maintenance, repair or reconstruction work.

A. Commercial General Liability insurance. Commercial general liability (CGL) with a limit of not less than $5,000,000 each occurrence and an aggregate limit of not less than $10,000,000. CGL insurance must be written on ISO occurrence form CG 00 01 12 04 (or a substitute form providing equivalent coverage).

The policy must also contain the following endorsement, which must be stated on the certificate of insurance:

- Contractual Liability Railroads ISO form CG 24 17 10 01 (or a substitute form providing equivalent coverage) showing "Union Pacific Railroad Company Property" as the Designated Job Site.

B. Business Automobile Coverage insurance. Business auto coverage written on ISO form CA 00 01 (or a substitute form providing equivalent liability coverage) with a combined single limit of not less $2,000,000 for each accident.

The policy must contain the following endorsements, which must be stated on the certificate of insurance:

- Coverage For Certain Operations In Connection With Railroads ISO form CA 20 70 10 01 (or a substitute form providing equivalent coverage) showing "Union Pacific Property" as the Designated Job Site.

CONFORMED

- Motor Carrier Act Endorsement - Hazardous materials clean up (MCS-90) if required by law.

C. **Workers Compensation and Employers Liability** insurance. Coverage must include but not be limited to:

- The District's and/or the District's contractor's statutory liability under the workers' compensation laws of the state where the job site is located.

- Employers' Liability (Part B) with limits of at least $500,000 each accident, $500,000 disease policy limit $500,000 each employee.

If the District, and/or the District's contractor, is self-insured, evidence of state approval and excess workers compensation coverage must be provided. Coverage must include liability arising out of the U.S. Longshoremen's and Harbor Workers' Act, the Jones Act, and the Outer Continental Shelf Land Act, if applicable.

D. **Railroad Protective Liability** insurance. Railroad Protective Liability insurance written on ISO occurrence form CG 00 35 12 04 (or a substitute form providing equivalent coverage) on behalf of Railroad as named insured, with a limit of not less than $2,000,000 per occurrence and an aggregate of $6,000,000. A binder stating the policy is in place must be submitted to Railroad before the work may be commenced and until the original policy is forwarded to Railroad.

E. **Umbrella or Excess** insurance. If the District, and/or the District's contractor, utilizes umbrella or excess policies, these policies must "follow form" and afford no less coverage than the primary policy.

Section 3. **OTHER INSURANCE REQUIREMENTS.**

A. All policy(ies) required above (except business automobile, worker's compensation and employers liability) must include Railroad as "Additional Insured" using ISO Additional Insured Endorsements CG 20 26 (or substitute form(s) providing equivalent coverage). The coverage provided to Railroad as additional insured shall not be limited by the District's liability under the indemnity provisions of this Agreement. BOTH THE DISTRICT AND RAILROAD EXPECT THAT UNION PACIFIC RAILROAD COMPANY WILL BE PROVIDED WITH THE BROADEST POSSIBLE COVERAGE AVAILABLE BY OPERATION OF LAW UNDER ISO ADDITIONAL INSURED FORM CG 20 26.

B. Punitive damages exclusion, if any, must be deleted (and the deletion indicated on the certificate of insurance), unless the law governing this Agreement prohibits all punitive damages that might arise under this Agreement.

C. The District waives all rights against Railroad and its agents, officers, directors and employees, where permitted by law, for recovery of damages to the extent that these damages are covered by the workers compensation and employers liability or commercial umbrella/excess liability insurance obtained by the District required by this Agreement, which must be stated on

CONFORMED

the certificate of insurance.

D. Prior to commencing any work, the District, and/or the District's Contractor, shall furnish Railroad with a certificate(s) of insurance, executed by a duly authorized representative of each insurer, showing compliance with the insurance requirements in this Agreement.

E. All insurance policies must be written by a reputable insurance company acceptable to Railroad or with a current Best's Insurance Guide Rating of A- and Class VII or better, and authorized to do business in the state where the job site is located.

F. The fact that insurance is obtained by the District, and/or Contractor, or by Railroad on behalf of the District, and/or Contractor, will not be deemed to release or diminish the liability of the District and Contractor, including, without limitation, liability under the indemnity provisions of this Agreement. Damages recoverable by Railroad from the District, Contractor or any third party will not be limited by the amount of the required insurance coverage.

CONFORMED

EXHIBIT E

TO CHANNEL IMPROVEMENT CONSTRUCTION & MAINTENANCE AGREEMENT

SPECIAL SAFETY REQUIREMENTS.

Safety of personnel, property, rail operations and the public is of paramount importance in the performance of the Project Work and subsequent work performed on and use of the Easement Property or Temporary License Area. As reinforcement and in furtherance of overall safety measures to be observed by the District (and not by way of limitation), the following special safety rules shall be followed:

a. The District's work force must be (and the District shall require any Contractor's work force to be) trained in accordance with all regulatory and Railroad safety requirements prior to performing any work at the job site or any other property of Standard or Railroad. Such training requirements may include eRailsafe Lite certification.

b. The District shall keep the job site free from safety and health hazards and ensure that its employees are competent and adequately trained in all safety and health aspects of the job. The District shall have proper first aid supplies available on the job site so that prompt first aid services can be provided to any person that may be injured on the job site. The District shall promptly notify Railroad of any U.S. Occupational Safety and Health Administration reportable injuries occurring to any person that may arise during activities or work performed on the job site. The District shall have a non-delegable duty to control its work force, while they are on the job site or any other property of Standard or Railroad to be certain they do not use, be under the influence of, or have in their possession any alcoholic beverage or illegally obtained drug, narcotic or other substance that may inhibit the safe performance of an activity or work.

c. The District's work force shall be suitably dressed to perform their duties safely and in a manner that will not interfere with their vision, hearing or free use of their hands or feet. Only waist length shirts with sleeves and trousers that cover the entire leg are to be worn. If flare-legged trousers are worn, the trouser bottoms must be tied to prevent catching. The work force should wear sturdy and protective footwear. The work force shall not wear boots (other than work boots), sandals, canvas-type shoes or other shoes that have thin soles or heels that are higher than normal. In addition, the District shall require its work force to wear personal protective equipment as specified by Railroad rules, regulations or Railroad officials overlooking the work at the job site. In particular, the protective equipment to be warn shall be:

(1) Protective head gear that meets American National Standard-Z89.1-latest revision. It is suggested that all hardhats be affixed with District's or Contractor's logo or name;

(2) Eye protection that meets American National Standard for occupational and educational eye and face protection, Z87.1-latest revision. Additional eye protection

CONFORMED

must be provided to meet specific job situations such as welding, grinding, burning, etc.; and

(3) Hearing protection which affords enough attenuation to give protection from noise levels that will be occurring on the job site.

d. All heavy equipment provided or leased by the District shall be equipped with audible back-up warning devices. If in the opinion of the Railroad Representative, any of District's or Contractor's equipment is unsafe for use on Standard's property and/or Railroad's property, the District, at the request of the Railroad Representative, shall immediately remove such equipment from Standard's property and/or Railroad's property, as applicable.

e. This Section shall not apply for any day to day use by the District for ingress and egress of those roadways located on the Easement Property that are separated from Railroad's trackage by a fence or that portion of the roadway adjacent thereto where the parties have permitted no fence to be installed due to clearance issues. For the avoidance of doubt, day to day use of the roadway for ingress or egress shall not include any work being performed on or about the roadway.

CONFORMED

EXHIBIT F

TO CHANNEL IMPROVEMENT CONSTRUCTION & MAINTENANCE AGREEMENT

Form of Easement Deed

(see attached)

CONFORMED

RECORD WITHOUT FEE UNDER SECTION 6103
GOVERNMENT CODE OF THE STATE OF CALIFORNIA

After Recording, Return To:

Real Estate Services Unit
Santa Clara Valley Water District
5750 Almaden Expressway
San Jose, California 95118

_____

(Space Above Reserved for County Recorder's Use)

Portion of APN: _____

Document No.: **[Insert Applicable District File Nos.]**

[Text applicable to the Easement Deed for property rights to be granted at Calaveras Blvd., Los Coches St., Yosemite Dr. and Montague Expwy. by Standard Realty and Development Company is preceded by "a:"]

[Text applicable to the Easement Deed for all other property rights to be granted by Standard Realty and Development Company is preceded by "b:"]

[Text applicable to the Easement Deed for property rights to be granted Union Pacific Railroad Company is preceded by "c:"]

CHANNEL IMPROVEMENT EASEMENT DEED

THIS CHANNEL IMPROVEMENT EASEMENT DEED (this "**Easement Deed**") is made this __ day of May, 2016 (the "**Effective Date**"), between **[a and b:** STANDARD REALTY AND DEVELOPMENT COMPANY, a California corporation **/c:** UNION PACIFIC RAILROAD COMPANY, a Delaware corporation**]** ("**Grantor**"), and SANTA CLARA VALLEY WATER DISTRICT, a special district created by the California legislature ("**Grantee**"), whose address is 5750 Almaden Expressway, San Jose, California 95118.

Grantor and Grantee have entered into that certain Channel Improvement Construction and Maintenance Agreement dated as of the Effective Date (the "**C&M Agreement**"), the terms and conditions of which are incorporated into this Easement Deed by reference, in connection with Grantee's Berryessa Creek Flood Risk Management Project and Grantee's use of the Premises (as such term is defined below). The provisions of this Easement Deed are in addition to, and not in limitation of, the C&M Agreement (including all subsequent supplements and modifications of the C&M Agreement).

CONFORMED

Grantor, for good and valuable consideration the receipt and sufficiency of which are hereby acknowledged, grants to Grantee, its successors and permitted assigns, non-exclusive, perpetual and assignable rights and easements (collectively, the "**Easements**") in Milpitas, Santa Clara County, California on, over and across the real property as described on the print marked **Exhibit A**, attached hereto and hereby made a part of this Easement Deed (the "**Premises**") for the limited purposes of: (i) constructing, inspecting, maintaining, repairing, renewing, using and operating channel improvement works, (ii) **[a:** Intentionally Omitted, **/b and c:** constructing, maintaining and using an access road in accordance with the Plans (as such term is defined in the C&M Agreement),**]** (iii) clearing, cutting, felling, removing and disposing of timber, trees, underbrush, buildings and/or other improvements from the Premises that impede or obstruct the flow of flood waters, and (iv) excavating, dredging, cutting away and removing land and placing dredge or spoil material on the Premises in accordance with the Plans; in each case reserving, however, to Grantor and its successors and assigns, all such rights and privileges in the Premises as may be used without interfering with or abridging the Easements acquired pursuant hereto. Notwithstanding the foregoing, Grantee agrees that it shall not remove any of Grantor's railroad facilities existing as of the Effective Date from the Premises (unless otherwise permitted by the Plans), and shall not remove any of Grantor's railroad facilities contemplated by the Plans or that may be constructed in the future by Grantor unless such future railroad facilities interfere with or abridge the Easements acquired hereunder. For the avoidance of doubt and without limiting any provisions contained in the C&M Agreement and this Easement Deed, Grantee shall obtain prior approval from Grantor, which approval shall not be unreasonably withheld, before commencing any work or the performance of any activity or work in which any person or equipment will be within twenty-five (25) feet of any track, as required in Exhibit B, Section 5 of the C&M Agreement.

The Easements are granted for the purposes described above only, and are subject to the terms and conditions of the C&M Agreement and this Easement Deed. Without limiting the foregoing, this grant does not include the right to install utilities of any nature, including without limitation, fiber optic, cable television, electrical, gas or liquid distribution, or telephone lines.

Grantor, its successors and assigns, reserves the right to use and maintain its entire property to construct, add, maintain, repair, renew, use, operate, change, modify or relocate railroad tracks, signal, communication, fiber optics and other railroad facilities upon, under, over, along or across any or all parts of its property, all or any of which may be freely done by Grantor; provided, however, that any use of the Premises shall not interfere with or abridge the rights and easements acquired by Grantee hereunder.

This Easement Deed is also subject to all outstanding superior rights (including without limitation those in favor of easement holders, licensees and lessees of Grantor's property, and others) and the right of the Grantor to renew and extend the same, and is made without covenant of title or for quiet enjoyment. It shall be Grantee's sole obligation to obtain such additional permission, licenses and grants necessary on account of any such existing rights. Notwithstanding the foregoing, Grantor understands and agrees that it shall not grant a future right in the Premises that expressly interferes with or abridges the Easements.

The Easements are also limited to such rights as Grantor may have in the Premises and is granted to and accepted by the Grantee in an **"AS IS," "WHERE IS"** and **"WITH ALL FAULTS"**

CONFORMED

basis and condition without warranty, express or implied. No damages shall be recoverable from Grantor because of any dispossession of Grantee or because of failure of, or defect in, Grantor's title.

The terms and conditions of this Easement Deed inure to and will bind Grantor's and Grantee's successors and assigns.

The Easements shall take effect upon the Effective Date and shall continue in full force and effect for as long as the channel improvements remain on the Premises, unless sooner terminated as provided in the C&M Agreement.

Within ninety (90) days after termination howsoever of the Easements or this Easement Deed, Grantee, at its sole expense, shall (i) peacefully and quietly vacate and surrender possession of the Premises, and (ii) deliver to Grantor a fully executed and acknowledged release and quitclaim of the Premises in recordable form satisfactory to Grantor.

CONFORMED

IN WITNESS WHEREOF, Grantor and Grantee have caused this Easement Deed to be executed as of the Effective Date.

Attest:

_____
Secretary

(Seal)

[a and b: STANDARD REALTY AND DEVELOPMENT COMPANY, a California corporation

By: _____
Tony K. Love, Chairman and CEO**]**

Attest:

_____
Secretary

(Seal)

[c: UNION PACIFIC RAILROAD COMPANY, a Delaware corporation

By: _____
Renay J. Robison, Director – Real Estate**]**

Attest: Michelle L. King, CMC

_____
Clerk/Board of Directors

SANTA CLARA VALLEY WATER DISTRICT, a special district created by the California legislature

By: _____
Printed Name: _____
Title: _____

CONFORMED

ACKNOWLEDGMENT

STATE OF NEBRASKA)
) ss.
COUNTY OF DOUGLAS)

On _____, 2016, before me, _____, Notary Public in and for said County and State, personally appeared _____ and _____, who are _____ and _____, respectively, of **[a and b:** Standard Realty and Development Company, a California corporation, **/c:** Union Pacific Railroad Company, a Delaware corporation,**]** and who are personally known to me (or proved to me on the basis of satisfactory evidence) to be the persons whose names are subscribed to in the within instrument, and acknowledged to me that they executed the same in their authorized capacities, and that by their signatures on the instrument the persons, or the entity upon behalf of which the persons acted, executed the instrument.

WITNESS my hand and official seal.

_____
Notary Public

(Seal)

CONFORMED

ACKNOWLEDGMENT

A NOTARY PUBLIC OR OTHER OFFICER COMPLETING THIS CERTIFICATE VERIFIES ONLY THE IDENTITY OF THE INDIVIDUAL WHO SIGNED THE DOCUMENT TO WHICH THIS CERTIFICATE IS ATTACHED, AND NOT THE TRUTHFULNESS, ACCURACY, OR VALIDITY OF THAT DOCUMENT.

STATE OF CALIFORNIA }
}
COUNTY OF _____ }

On _____, 201__, before me, _____, personally appeared _____, who proved to me on the basis of satisfactory evidence to be the person(s) whose name is subscribed to the within instrument and acknowledged to me that he executed the same in his authorized capacity, and that by his signature on the instrument the person, or the entity upon behalf of which the person acted, executed the instrument.

I certify under PENALTY OF PERJURY under the laws of the State of California that the foregoing paragraph is true and correct.

WITNESS my hand and official seal.

_____ (Notary Seal)
Signature of Notary Public

CONFORMED

EXHIBIT A
TO
EASEMENT DEED

Legal Description and Depiction of the Premises

(see attached)

CONFORMED

EXHIBIT G

TO CHANNEL IMPROVEMENT CONSTRUCTION & MAINTENANCE AGREEMENT

Form of Amended and Restated Easement Deed

(see attached)

CONFORMED

RECORD WITHOUT FEE UNDER SECTION 6103
GOVERNMENT CODE OF THE STATE OF CALIFORNIA

After Recording, Return To:

Real Estate Services Unit
Santa Clara Valley Water District
5750 Almaden Expressway
San Jose, California 95118

_____

(Space Above Reserved for County Recorder's Use)

Portion of APN: _____

Document No.: **[Insert Applicable District File Nos.]**

[Text applicable to the deed identified as 4017-09 to be amended and restated by Union Pacific Railroad Company is preceded by "a:"] Document No. 4017-99

[Text applicable to the deed identified as 4017-12 to be amended and restated by Union Pacific Railroad Company is preceded by "b:"] Document No. 4017-100

[Text applicable to the deed identified as 4017-49 to be amended and restated by Standard Realty and Development Company is preceded by "c:"] Document No. 4017-101

[Text applicable to the deed identified as 4017-51 to be amended and restated by Standard Realty and Development Company is preceded by "d:"] Document No. 4017-102

AMENDED AND RESTATED CHANNEL IMPROVEMENT EASEMENT DEED

THIS AMENDED AND RESTATED CHANNEL IMPROVEMENT EASEMENT DEED (this "**Easement Deed**") is made this ___ day of May, 2016 (the "**Effective Date**"), between **[a and b:** UNION PACIFIC RAILROAD COMPANY, a Delaware corporation **/c and d:** STANDARD REALTY AND DEVELOPMENT COMPANY, a California corporation**]** ("**Grantor**"), and SANTA CLARA VALLEY WATER DISTRICT, a special district created by the California legislature ("**Grantee**"), whose address is 5750 Almaden Expressway, San Jose, California 95118.

[a: Francis L. Wrigley and Beatrice C. Wrigley, as predecessors in interest to Grantor, and Grantee entered into that certain instrument dated as of April 7, 1955 and recorded in the Official Records of Santa Clara Valley on April 19, 1955 at Reception No. 1078040 (the "**Original Easement Deed**") whereby Grantor granted to Grantee an easement for a drainage ditch along and across the real property described in the Original Easement Deed. Grantor and Grantee now hereby desire to amend and restate the Original Easement Deed in its entirety.**]**

CONFORMED

[b: The Western Pacific Railroad Company, as predecessor in interest to Grantor, and Grantee entered into that certain instrument dated as of March 15, 1955 and recorded in the Official Records of Santa Clara Valley on April 19, 1955 at Reception No. 1078042 (the "**Original Easement Deed**") whereby Grantor granted to Grantee an easement for a drainage ditch along and across the real property described in the Original Easement Deed. Grantor and Grantee now hereby desire to amend and restate the Original Easement Deed in its entirety.**]**

[c: Grantor and Grantee entered into that certain Grant of Easement dated as of November 2, 1978 and recorded in the Official Records of Santa Clara Valley on November 13, 1978 at Reception No. 6198684 (the "**Original Easement Deed**") whereby Grantor granted to Grantee an easement for flood control and/or storm water purposes in, upon, over and across the real property described in the Original Easement Deed. Grantor and Grantee now hereby desire to amend and restate the Original Easement Deed in its entirety with respect to any real property described in the Original Easement Deed that is currently owned by Grantor, as such real property is described on the print marked **Exhibit A**, attached hereto and hereby made a part of this Easement Deed (the "**Premises**").**]**

[d: Grantor and Grantee entered into that certain Grant of Easement dated as of November 21, 1978 and recorded in the Official Records of Santa Clara Valley on December 21, 1978 at Reception No. 6238066 (the "**Original Easement Deed**") whereby Grantor granted to Grantee an easement for flood control and/or storm water purposes in, upon, over and across the real property described in the Original Easement Deed. Grantor and Grantee now hereby desire to amend and restate the Original Easement Deed in its entirety with respect to any real property described in the Original Easement Deed that is currently owned by Grantor, as such real property is described on the print marked **Exhibit A**, attached hereto and hereby made a part of this Easement Deed (the "**Premises**").**]**

Grantor and Grantee have entered into that certain Channel Improvement Construction and Maintenance Agreement dated as of the Effective Date (the "**C&M Agreement**"), the terms and conditions of which are incorporated into this Easement Deed by reference, in connection with Grantee's Berryessa Creek Flood Risk Management Project and Grantee's use of the Premises **[a and b:** (as such term is defined below)**]**. The provisions of this Easement Deed are in addition to, and not in limitation of, the C&M Agreement (including all subsequent supplements and modifications of the C&M Agreement).

Grantor, for good and valuable consideration the receipt and sufficiency of which are hereby acknowledged, grants to Grantee, its successors and permitted assigns, non-exclusive, perpetual and assignable rights and easements (collectively, the "**Easements**") in Milpitas, Santa Clara County, California on, over and across **[a and b:** the real property as described on the print marked **Exhibit A**, attached hereto and hereby made a part of this Easement Deed (the "**Premises**") **/c and d:** the Premises**]** for the limited purposes of: (i) constructing, inspecting, maintaining, repairing, renewing, using and operating channel improvement works, (ii) **[a and b:** Intentionally Omitted, **/c and d:** constructing, maintaining and using an access road in accordance with the Plans (as such term is defined in the C&M Agreement) (the "**Access Road**",**]** (iii) clearing, cutting, felling, removing and disposing of timber, trees, underbrush, buildings and/or other improvements from the Premises that impede or obstruct the flow of flood waters, and (iv) excavating, dredging, cutting away and removing land and placing dredge or

CONFORMED

spoil material on the Premises in accordance with the Plans; in each case reserving, however, to Grantor and its successors and assigns, all such rights and privileges in the Premises as may be used without interfering with or abridging the Easements acquired pursuant hereto. Notwithstanding the foregoing, Grantee agrees that it shall not remove any of Grantor's railroad facilities existing as of the Effective Date from the Premises (unless otherwise permitted by the Plans), and shall not remove any of Grantor's railroad facilities contemplated by the Plans or that may be constructed in the future by Grantor unless such future railroad facilities interfere with or abridge the Easements acquired hereunder. For the avoidance of doubt and without limiting any provisions contained in the C&M Agreement and this Easement Deed, Grantee shall obtain prior approval from Grantor, which approval shall not be unreasonably withheld, before commencing any work or the performance of any activity or work in which any person or equipment will be within twenty-five (25) feet of any track **[c and d:** (with the exception of the use of the portion of the Access Road separated from Grantor's property or operations by fencing in accordance with the Plans for the limited purposes of ingress and egress to and from the channel improvement works which Grantor acknowledges does not require prior approval)**]**, as required in Exhibit B, Section 5 of the C&M Agreement.

The Easements are granted for the purposes described above only, and are subject to the terms and conditions of the C&M Agreement and this Easement Deed. Without limiting the foregoing, this grant does not include the right to install utilities of any nature, including without limitation, fiber optic, cable television, electrical, gas or liquid distribution, or telephone lines.

Grantor, its successors and assigns, reserves the right to use and maintain its entire property to construct, add, maintain, repair, renew, use, operate, change, modify or relocate railroad tracks, signal, communication, fiber optics and other railroad facilities upon, under, over, along or across any or all parts of its property, all or any of which may be freely done by Grantor; provided, however, that any use of the Premises shall not interfere with or abridge the rights and easements acquired by Grantee hereunder.

This Easement Deed is also subject to all outstanding superior rights (including without limitation those in favor of easement holders, licensees and lessees of Grantor's property, and others) and the right of the Grantor to renew and extend the same, and is made without covenant of title or for quiet enjoyment. It shall be Grantee's sole obligation to obtain such additional permission, licenses and grants necessary on account of any such existing rights. Notwithstanding the foregoing, Grantor understands and agrees that it shall not grant a future right in the Premises that expressly interferes with or abridges the Easements.

The Easements are also limited to such rights as Grantor may have in the Premises and is granted to and accepted by the Grantee in an **"AS IS," "WHERE IS"** and **"WITH ALL FAULTS"** basis and condition without warranty, express or implied. No damages shall be recoverable from Grantor because of any dispossession of Grantee or because of failure of, or defect in, Grantor's title.

The terms and conditions of this Easement Deed inure to and will bind Grantor's and Grantee's successors and assigns.

CONFORMED

The Easements shall take effect upon the Effective Date and shall continue in full force and effect for as long as the channel improvements remain on the Premises, unless sooner terminated as provided in the C&M Agreement.

Within ninety (90) days after termination howsoever of the Easements or this Easement Deed, Grantee, at its sole expense, shall (i) peacefully and quietly vacate and surrender possession of the Premises, and (ii) deliver to Grantor a fully executed and acknowledged release and quitclaim of the Premises in recordable form satisfactory to Grantor.

IN WITNESS WHEREOF, Grantor and Grantee have caused this Easement Deed to be executed as of the Effective Date.

Attest:

_____
Secretary

(Seal)

[c and d: STANDARD REALTY AND DEVELOPMENT COMPANY, a California corporation

By: _____
Tony K. Love, Chairman and CEO**]**

Attest:

_____
_____ Secretary

(Seal)

[a and b: UNION PACIFIC RAILROAD COMPANY, a Delaware corporation

By: _____
Renay J. Robison, Director – Real Estate**]**

Attest: Michelle L. King, CMC

_____
Clerk/Board of Directors

SANTA CLARA VALLEY WATER DISTRICT, a special district created by the California legislature

By: _____
Printed Name: _____
Title: _____

CONFORMED

ACKNOWLEDGMENT

STATE OF NEBRASKA)
) ss.
COUNTY OF DOUGLAS)

On _____, 2016, before me, _____, Notary Public in and for said County and State, personally appeared _____ and _____, who are _____ and _____, respectively, of **[c and d:** Standard Realty and Development Company, a California corporation, **/a and b:** Union Pacific Railroad Company, a Delaware corporation,**]** and who are personally known to me (or proved to me on the basis of satisfactory evidence) to be the persons whose names are subscribed to in the within instrument, and acknowledged to me that they executed the same in their authorized capacities, and that by their signatures on the instrument the persons, or the entity upon behalf of which the persons acted, executed the instrument.

WITNESS my hand and official seal.

_____
Notary Public

(Seal)

CONFORMED

ACKNOWLEDGMENT

A NOTARY PUBLIC OR OTHER OFFICER COMPLETING THIS CERTIFICATE VERIFIES ONLY THE IDENTITY OF THE INDIVIDUAL WHO SIGNED THE DOCUMENT TO WHICH THIS CERTIFICATE IS ATTACHED, AND NOT THE TRUTHFULNESS, ACCURACY, OR VALIDITY OF THAT DOCUMENT.

STATE OF CALIFORNIA }
}
COUNTY OF _____ }

On _____, 201__, before me, _____, personally appeared _____, who proved to me on the basis of satisfactory evidence to be the person(s) whose name is subscribed to the within instrument and acknowledged to me that he executed the same in his authorized capacity, and that by his signature on the instrument the person, or the entity upon behalf of which the person acted, executed the instrument.

I certify under PENALTY OF PERJURY under the laws of the State of California that the foregoing paragraph is true and correct.

WITNESS my hand and official seal.

_____ (Notary Seal)
Signature of Notary Public

CONFORMED

EXHIBIT A
TO
EASEMENT DEED

Legal Description and Depiction of the Premises

(see attached)

CONFORMED

EXHIBIT H

TO CHANNEL IMPROVEMENT CONSTRUCTION & MAINTENANCE AGREEMENT

Estimate

(see attached)

CONFORMED

EXHIBIT H

UNION PACIFIC RAILROAD COMPANY

SUMMARY ESTIMATE SHEET

Location: Milpitas Industrial Lead, Milpitas, California

DOT No. 833901Y, MP 11.67

Project: Wooden Trestle replacement

Estimate:

Flagging($1500 / day) x 30 days	$45,000
Remove rail from existing bridge, Remove track structure from adjacent grade crossing,	
Install new track structure over new culvert and through grade crossing,	
Install ties in approaches to grade crossing and culvert (UP Forces)	$302,588
Engineering Review and Inspection	$25,000
Subtotal	$372,588
Contingency (10%)	$37,259
Total estimate cost:	**$409,547**

***Note:** This is an estimate only. Railroad shall bill on an actual cost basis.

CONFORMED

EXHIBIT H

DATE: 2016-05-20

ESTIMATE OF MATERIAL AND FORCE ACCOUNT WORK
BY THE
UNION PACIFIC RAILROAD

THIS ESTIMATE GOOD FOR 6 MONTHS EXPIRATION DATE IS :2016-11-18

DESCRIPTION OF WORK:
MILPITAS,CA/ MILTPITAS BLVD./ DOT 833901Y/ MILPITAS INDU LEAD, MP 11.67
INSTALL 104 TF CONCRETE XING-CURVED 15 DEGREE, 115# RAIL, 10W TIES.
REPLACE TRACK ACROSS FORMER BRIDGE BEING RETIRED BY OTHERS.
PROJECT IS 100% RECOLLECTABLE, 50% FROM THE FEDERAL SOURCES AND 50% FROM
LOCAL SOURCES, USING THE FEDERAL LABOR ADDITIVE RATE W. OVERHEAD AND

PID: 95436 AWO: MP,SUBDIV: 11.67, MILPITASIN
SERVICE UNIT: 19 CITY: MILPITAS STATE: CA

DESCRIPTION	QTY	UNIT	LABOR	MATERIAL	RECOLL	UPRR	TOTAL
ENGINEERING WORK							
ENGINEERING			2266		2266		2266
FLAGGING			2220		2220		2220
TRACK SUPERVISORS			2220		2220		2220
LABOR ADDITIVE 234.24			15693		15693		15693
TOTAL ENGINEERING			22399		22399		22399
TRACK & SURFACE WORK							
BALAST/SURFACE & LINE	4.00	CL	5111	3838	8949		8949
BILL PREP FEE				900	900		900
ENVIRONMENTAL PERMITS				10	10		10
EQUIPMENT RENTAL				2500	2500		2500
FIELD WELDING			6451	548	6999		6999
FOREIGN LINE FREIGHT				1210	1210		1210
HOMELINE FREIGHT				900	900		900
ROADWAY APPROACH				10000	10000		10000
OTM			6532	10454	16986		16986
RAIL	640.00	LF	16972	10598	27570		27570
RDXING-CURVED, 15D00M	104.00	TF	5773	41308	47081		47081
SAW CUT CONTRACT				2000	2000		2000
TRACK-INSTAL			3835	10000	13835		13835
XTIE	199.00	EA	21124	17218	38342		38342
SALES TAX				2723	2723		2723
MATL STORE EXPENSE				956	956		956
LABOR ADDITIVE 234.24%			99228		99228		99228
TOTAL TRACK & SURFACE			165026	115163	280189		280189
LABOR/MATERIAL EXPENSE			187425	115163			
RECOLLECTIBLE/UPRR EXPENSE					302588	0	
ESTIMATED PROJECT COST							302588
EXISTING REUSEABLE MATERIAL CREDIT					0		
SALVAGE NONUSEABLE MATERIAL CREDIT					0		
RECOLLECTIBLE LESS CREDITS					$302588		

THE ABOVE FIGURES ARE ESTIMATES ONLY AND SUBJECT TO FLUCTUATION. IN THE EVENT OF AN INCREASE OR DECREASE IN THE COST OR QUANTITY OF MATERIAL OR LABOR REQUIRED, UPRR WILL BILL FOR ACTUAL CONSTRUCTION COSTS AT THE CURRENT EFFECTIVE RATE.

FILE:EENG205.TSO.EPM.ESTIMATE(P095436A)

CONFORMED

SANTA CLARA COUNTY ROADS AND AIRPORTS DEPARTMENT

ENCROACHMENT PERMIT # 27 160191

INSPECTIONS REQUIRED!

TO SCHEDULE INSPECTIONS CALL 408-573-2429

24 HOURS BEFORE STARTING ANY WORK

27 160191

THE COUNTY OF SANTA CLARA 1850

KEEP THIS PERMIT ON JOBSITE

SEE ATTACHMENTS FOR PERMIT REQUIREMENTS

Permit Number	Date Issued	Expiration Date
27 160191	16-May-16	16-Aug-16

Issued By: Gerry Dutra

Date Completed

Date Cancelled

Construction Insp. By

Electrical Insp. By

Permit Office Final Date

PERMITTEE

Name **Judy Nam** Phone **(408) 630-2474**

Company **Santa Clara Valley Water District** E-Mail: **Jnam@valleywater.org**

Mailing Address: **5750 Almaden Expressway, A-2144** Fax:

City: **San Jose** State **Ca** Zip **95118**

LOCATION OF WORK

Address

Road Name: **Montague Expressway**

Cross Street: **Berryessa Creek / near S. Milpitas Blvd**

Work Order No:

Locaide: 25-40-79 Zone 2

DESCRIPTION OF WORK

See Attached MEMORANDUM - Exhibit A for "Bidding Purposes Only" dated May 10, 2016.

GENERAL PROVISIONS

All requirements and provisions contained within the attached General Provisions document must be abided by at all times unless noted otherwise.

SPECIAL PROVISIONS In addition to the attached General Provisions the following Special Provisions apply:

See attached MEMORANDUM - Exhibit A for "Bidding Purposes Only", General Provisions, Additional Special Provisions - Expressways, Project Plans (U.S. Army Corps of Engineers - San Francisco District In Cooperation with SCVWD, Upper Berryessa Creek Flood Risk Management Project), and Extension Fee Schedule.

FEES	Plan Check	Inspection	* Trench Cut	Permit Fee	**Deposit Amount	☑ No Fee
	$0.00	$0.00	$0.00	$0.00	$0.00	

** IF PERMIT HAS A WBS NO. THE TOTAL ENCROACHMENT PERMIT FEE IS AN ESTIMATED DEPOSIT; REFUND OR ADDITIONAL FEE WILL BE DETERMINED AFTER ENCROACHMENT PERMIT IS SIGNED OFF AND ACCOUNTING IS COMPLETE. *NOTE: Trench cut to be measured upon completion, and an additional fee assessed for it.

BONDS	AMOUNT	TYPE	RELEASE DATE
	$0.00		

Roads Dept Engineer D. Boyd

SP #:

****WBS:** 603-90-

CONFORMED

FOR BIDDING PURPOSES ONLY

27-160191

CONFORMED

FOR BIDDING PURPOSES ONLY

County of Santa Clara

Roads and Airports Department

101 Skyport Drive
San Jose, California 95110-1302
(408) 573-2400

MEMORANDUM – Exhibit 'A'

FOR BIDDING PURPOSES ONLY
27-160191

DATE: May 10, 2016

TO: **Judy Nam,** Project Manager
SCVWD

FROM: **David Boyd**
Land Development Services

SUBJECT: **Clearance for a County *Conditional* Encroachment Permit**
CONDITIONAL PERMIT - SCVWD and U.S. Army Corp of Engineers are implementing the Upper Berryessa Creek Flood Risk Management Project, which will enlarge 2.2 miles of Berryessa Creek to provide 1% flood protection. The project will require reconstruction of the channel within County R&A property located downstream of the Montague Expressway Bridge crossing Berryessa Creek.

FILE NO./JOB: **160191**

LOCATION: **Montague Expressway crossing Berryessa Creek**

SPECIAL PROJECT NOTES:

There is a 5-yr warranty when the project is completed (Reference to County Ordiance NS-7039, Section B17-36.4). County's Roads Operations Engineering will be the one to determine what constitue failure based on acceptable industry standards including cracks and separation in the microsurfacing, settlement where the trench repairs took place, damaged pavement edges along the trenches are considered failures.

Erosion and Sediment Control Notes:

1. "The Utility Company, their employees, subcontractors, and/or any person performing construction activities shall install and maintain construction Best Management Practices (BMPs) on the project site and within the Santa Clara County Road Right of Way throughout the duration of construction and until the establishment of permanent stabilization and sediment control to prevent the discharge of pollutants including sediment, construction materials, excavated materials, waste materials into the Santa Clara County Road Right of Way, storm sewer waterways, and roadway infrastructure. BMPs shall include, but not be limited to, the following:
    a. Prevention of pollutants in storm water discharges from the construction site and the contractor's material and equipment laydown/staging areas,
    b. Prevention of tracking of mud, dirt and construction materials onto public road right of way, and
    c. Prevention of discharge of water runoff during dry and wet weather conditions onto public road right of way."

"FOR BIDDING PURPOSES ONLY"

CONFORMED

CONFORMED

FOR BIDDING PURPOSES ONLY
27-160191

2. "The Utility Company, their employees, subcontractors, and/or any person performing construction activities shall ensure that all temporary construction facilities, including but not limited to construction materials, deliveries, hazardous and non-hazardous material storage, equipment, tools, portable toilets, concrete washout, garbage containers, laydown yards, secondary containment areas, etc. are located outside the Santa Clara County Road Right of Way."

Improvement Plan Construction Notes:

1. "All Work in the County Road Right of Way requires an encroachment permit from the Roads and Airports Department. Each individual activity requires a separate permit – i.e. retaining walls, driveway approaches, temporary construction entrances, fences, landscaping, tree removal, storm drainage improvements, all utility operations (relocations, replacements, abandonments, temporary facilities, and/or new facilities for cable, electric, gas, sewer, water), etc."

2. "Roadways designated as Not County maintained roads as shown upon this plan, will not be eligible for County maintenance until the roadways are improved (at no cost to the County) to public maintenance road standards approved by the Board of Supervisors and in effect at such time that the roadways are considered for acceptance into the County's Road System."

95% Plan Check Review Comments for Conditional Permit:

A. Referring to the retaining wall at the southeast corner of the bridge referring to sheet C-108, the Army Corps plans do show that the Water District will tie into the Montague channel at the transition at 164+42.96, which is already stated on the plans as transitioning from 12' to 16'.

B. Referring to the 18' access road on the east side of the creek, south of the bridge where there is no access to Montague Expressway. Per the Water District's review, the 20' wide access road will not be shown on the typical cross section because that section is for the entire length of channel on those particular sheets. The Water District will modify the following note on the plan view: "*prop access road PIP (VTA)" to "prop access road by VTA: PIP and transition from 16'* "

C. Grading will need to be coordinated by all parties within the Montague project depending upon who gets there first.

D. Any traffic control set-up MUST be coordinated with the County of Santa Clara, City of Milpitas, SCVWD, UPPRR, VTA, and County Contractor's OC JONES and Sons.

E. Any potholes that are found within the County ROW will need to be repaired by the SCVWD contractor related to this project.

It is recommended that a County ***Conditional*** Encroachment Permit "for bidding purposes only" be issued to ***Santa Clara Valley Water District*** per the preliminary terms and conditions, as well as the following Special Provisions which may be subject to change and/or revision.

1. Prior to construction, Applicant shall conduct a preconstruction meeting involving the County inspector, Applicant's representatives and any contractor working on this project.
2. Protect County underground traffic signal and fiber optics facilities. ***Call USA 48 hours prior to performing work. Refer to all of Standard Specification Section 86 relating to Signals, Lighting, Traffic Communications & Other Electrical Systems.***
3. Any damage to the existing county fiber optic cable will result in replacement of the fiber cable from existing end-to-end splices in accordance with the permit provision in section II subsection 6.A thru 6.E
4. Fiber Optic trunk line belonging to Santa Clara County Roads & Airports in area of work. Any vehicle detection loops damaged by work are to be replaced in 48hrs.

CONFORMED

CONFORMED

5. *Contractor needs to recess all steel plates and plates are traffic rated non-skid plates after each shift!!*
6. Contractor shall be responsible for restoring pavement to like or better condition.
7. Any excavation shall conform with County Standard drawing U/3A with the requirement that pavement section shall match existing. Please refer to ***Additional Special Provisions – Expressways Only.***
8. After project is completed Contractor **MUST** supply the county red-line as built for our records & use. The County will require to have all compaction reports when the project is completed.
9. Prior to start of any construction activity the contractor shall request a construction encroachment permit. Submit a traffic control plan to the County. **The County may take at least three (3) weeks to review the plan and may request revisions prior to issuing the encroachment permit for construction use.** When the Traffic Control Plan is completed please contact the permit issuance unit at 1.408.573.2475.
10. For any striping in County ROW to be thermoplastic and replaced per existing striping. County traffic section to approve striping layout prior to final installation.
11. Working hours 9:00am to 3:00pm Monday through Friday (only).
12. The Contractor **MUST** notify all business and residents of pending construction work.
13. Slurry from pavement/curb cutting shall be vacuum and disposed properly. Any stock pile excavated material to be covered by a tarp. No dirt/debris shall be tracked or washed into storm drain (**Montague Expressway**). Do not broadcast spoils on-site. Sweep daily or as directed by County. Excavated materials shall be disposed off-site properly at approved site.

Attachments: U.S Army Corps of Engineers – San Francisco District In Cooperation with Santa Clara Valley Water District. Upper Berryessa Creek Flood Risk Management Project, Santa Clara County, California
Additional Special Provisions – Expressways Only.

Please call me at 573-2450 if you have any questions.
Cc: File# 160191, DB, RC

"FOR BIDDING PURPOSES ONLY"
CONFORMED
FOR BIDDING PURPOSES ONLY
27-160191

CONFORMED

FOR BIDDING PURPOSES ONLY
27-160191

GENERAL PROVISIONS

I. WORK REQUIREMENTS

1. **Inspection** – The Permittee shall request initial inspection from the County at 408-573-2429 a minimum of twenty-four (24) hours prior to any work being performed. The Permittee shall request final inspection from the County within ten (10) days from the date of completion of the work at 408-573-2429.

2. **Legal Enforcement** – Work under the Encroachment Permit (Permit) must comply with provisions in the following references, whether or not they are set forth herein:
   - California Streets and Highways Code,
   - California State Water Resources Control Board NPDES General Permit for Storm Water Discharges Associated with Construction & Land Disturbance Activities (Order No. 2009-0009-DWQ or any amendment thereof),
   - California Regional Water Quality Control Board, San Francisco Bay Region, Municipal Regional Storm Water NPDES Permit (Order No. R2-2009-0074, NPDES Permit No. CAS612008, October 14, 2009, or any amendment thereof),
   - Central Coast Regional Water Quality Control Board, Revised Regional Storm Water Management Plan for City of Gilroy, City of Morgan Hill, and County of Santa Clara (South County) (February 22, 2010 or any amendments thereof),
   - County of Santa Clara Ordinance Code,
   - County of Santa Clara Standard Details and Standard Specifications,
   - Local ordinances and regulations of applicable municipality where the work is located, and
   - Other regulatory agencies.

3. **General Instructions** – All work is to be completed in accordance with these General Provisions attached to the Permit, any special provisions or conditions shown on the Permit itself. Work plans and specifications, required bonds and insurance, must be submitted, approved and on file in the Roads and Airports Department (hereinafter County) prior to issuance of the Permit. If additional engineering, soils investigations or geological investigations are required, they shall be provided by the Permittee. All survey work including construction staking shall be provided by the Permittee.

4. **Emergency Contacts** – Names and telephone numbers of two responsible persons shall be furnished to the Permit Office prior to start of work for emergency contacts, 24 hours a day, seven days a week. The Permittee or the Contractor shall have a supervisory representative available for contact on the project at all times during the construction.

5. **On Site** – This Permit shall be kept at the site of work and must be shown to any authorized representative of the County or any law enforcement officer upon demand.

CONFORMED

6. **Equipment and Material Storage** – No equipment (construction or other) or material shall be stored within the County ROW near the edge of the pavement, within the traveled way, or within the shoulder line which would create a hazardous condition or nuisance for the traveling public. Any material stored at the site of work must be shown to any authorized representative of the Department or any law enforcement officer upon demand. All proposed construction staging areas shall be presented to the Department for review and approval prior to use

7. **Traffic Protection** – The Permittee shall make adequate provisions for the protection of the traveling public. Two copies of a proposed traffic control plan shall be submitted to the Permit Office for processing prior to issuance of a permit. All work which requires a traffic detour requires the Permittee to notify Santa Clara County Communications at (408) 299-2501 and the appropriate local garbage collection company of the date(s), time(s) and details of all detours.

8. **Traffic Lanes** – All traffic lanes shall be open to the traveling public during all hours of darkness, and on all weekends and holidays unless prior written approval is obtained from the County. One-way traffic may be permitted under the control of not less than two competent flagmen or as required by the latest issue of the California Manual on Uniform Traffic Control Devices for Streets and Highways during normal working hours with prior approval in writing from the County. No variance of the requirements of this Section **I.7.** will be allowed without prior written approval from the County. No work within the ROW shall be undertaken until all materials, equipment, and labor forces are available to pursue the work to completion.

9. **Signs** – Any signs to be constructed in the execution of this Permit are to be approved by the County prior to placement of any signs.

10. **Temporary Traffic Control** – Temporary traffic control, including traffic control devices and signs, shall be installed in accordance with Part 2 – Signs, Part 6 – Temporary Traffic Control and any other applicable parts of the latest issue of the California Manual on Uniform Traffic Control Devices for Streets and Highways.

11. **Drainage** – If the work performed by the Permittee interferes with the established surface drainage pattern ample provision shall be made by the Permittee to provide for said drainage with prior approval in writing from the County before any work is performed. If there are any negative impacts to the established surface drainage patterns the Permittee shall take immediate steps to mitigate the negative impacts and restore the surface drainage patterns existing prior to any work being performed to the County's satisfaction and at no cost to the County.

12. **Permanent Monuments** – Any property corner stake, street monument or other permanent survey monument that will be disturbed during construction

CONFORMED

shall be shown on the plans for the work and referenced, removed and reset by competent persons legally qualified to perform this work.

13. **Facility Relocation** – Permittee shall be responsible for any required relocation, and cost thereof, of existing utilities or encroachments which may be affected by this Permit.

14. **Monument Corner Records** – Section 8771 of the Business and Professional Code, and Section 732, 149.5, and 810.5 of the Streets and Highways Code, Rev. 1995, mandates that prior to any reconstruction or relocation of streets or highways, all survey monuments are to be located and referenced to stable objects outside the construction area by or under the direction of a person authorized to practice land surveying. A corner record which shows the reference ties is to be filed in the office of the County Surveyor. After construction, permanent monuments are to be reset and a second corner record shall be filed. The Permittee is responsible for the cost of this work.

15. **Sight Distance** – As related to and affected by the improvements covered by this Permit, Permittee shall provide and maintain adequate sight distance per the latest Caltrans standards. Typical compliance may include, but not limited to, trimming and/or removal of trees; trimming and/or removal of vegetation; and, grading of embankments to provide for adequate sight distance. Before and after photos shall be taken by the Permittee and provided to the County for the files and reference as needed. Any costs associated with these photos shall be the sole responsibility of the Permittee.

16. **Storm Water Pollution Prevention** – The work performed under this Permit is subject to the National Pollutant Discharge Elimination System (NPDES) regulations governed by State, San Francisco Bay Regional Water Quality Control Board for work sites located in the north County San Francisco Bay watersheds in (Region 2), and Central Coast Regional Water Quality Control Board for work sites located in the South County Monterey Bay watersheds (Region 3). (The following link will help to find the Regional Water Board for a particular work site: http://www.waterboards.ca.gov/waterboards_map.shtml.)

    The County of Santa Clara Department of Roads & Airports, as the designated Owner of the public road and expressway facilities where the work occurs, is responsible for preventing and/or mitigating potential chemical release, erosion, and sedimentation impacts associated with storm water runoff that discharges to a municipal separate storm drain system or waterway.

    A. With respect to prevention and mitigation of construction-related storm water impacts to the public road and expressway facilities, the Permittee must develop and submit a Storm Water Pollution Prevention Plan (SWPPP) for review and approval by the County prior to the start of construction. The Permittee must implement the SWPPP during construction. The SWPPP may be developed as part of the entire project site's SWPPP and must identify appropriate storm water pollution prevention and treatment measures or Best Management Practices (BMPs)

CONFORMED

including, but not limited to, to the following practices applicable to the public road and expressway facilities:

a. Reduction of pollutants in storm water discharges from the construction site and the contractor's material and equipment laydown/staging site in connection with construction activities.
b. Prevention of tracking of mud, dirt and construction materials onto public streets and expressways from the construction and equipment/material lay-down/staging sites.
c. Prevention of discharge of water runoff during dry and wet weather onto public streets and expressways from the construction and equipment/material lay-down/staging site.
d. Prevention of soil erosion and sedimentation from construction and equipment/material lay-down/staging sites entering public street and expressway right-of-ways.

The Permittee must maintain at the construction site the County-approved SWPPP, and revise the SWPPP as necessary or required by the County or the regulatory agency if, during construction, conditions (such as change in construction operations, construction staging modification, change in site conditions, or offsite drainage impacts) occur that affect the ability to implement the SWPPP effectively or the ability of the SWPPP to meet the objectives for water pollution control.

For improvements for which construction disturbs one acre of land or more, the Permittee must, in addition to preparing a SWPPP, obtain coverage under the State Construction General Permit and file a Notice of Intent with the State Water Resources Control Board prior to commencement of construction. (For details, go to: www.swrcb.ca.gov/water_issues/programs/stormwater/construction.shtml).

B. The following manuals are available to assist the Permittee in developing the SWPPP for the on-site and off-site improvements:

a. Guidelines for Construction Projects prepared by California Regional Water Quality Control Board (available for purchase on DVD at http://store.abag.ca.gov/construction.asp#e); and
b. Erosion and Sediment Control Field Manual (4th Edition) prepared by the California Regional Water Quality Control Board (available for purchase on DVD at http://store.abag.ca.gov/construction.asp#e); and
c. Storm Water Best Management Practice Handbook for Construction Activity (November 2009 or latest edition) prepared by California Storm Water Quality Association (available by subscription at https://www.casqa.org/casqastore/entitiy/tabid/169/c-4-best-management-practice-bmp-handbooks.aspx).

C. Exemptions:

CONFORMED

a. SWPPP preparation and submittal by the Permittee is not required for the following types of projects:

i. Improvements related to individual detached single-family homes, such as construction, repair or replacement of sidewalk, curb and gutter, and/or driveway with impervious surface, that are not part of a larger plan of development <u>and</u> that disturb less than one acre of land.

ii. Activities related to maintenance and improvement of existing utilities including, but not limited to, routine maintenance, scheduled and emergency repairs, and abandoning and/or upgrading utility lines and associated facilities.

iii. Construction activities related to installation of new underground and/or overhead utilities (such as conduits, substructures, pipelines, towers, poles, cables, wires, connectors and other associated equipment) including, but not limited to, potholing, concrete and asphalt removal and replacement, trenching, excavation, boring and drilling, and pipeline and substructure installations, that disturb less than one acre of land.

b. For projects that receive exemptions under Section I.16.C.a., the Permittee and its contractor must implement best management practices (BMPs) to prevent construction materials, excavated materials, waste materials, and sediment caused by erosion during construction activities, on-site or off-site, from entering the storm drain system and waterways.

c. For projects that are exempt under Section **I.16.C.a**, the Permittee must also comply with the BMP Checklist furnished by the County.

II. PERMIT PROVISIONS

1. **Revocation** – This Permit is revocable in accordance with the procedures and requirements of California Streets and Highways Code.

2. **Indemnification** – The Permittee shall fully indemnify, defend, and hold harmless the County of Santa Clara (hereinafter "County"), it's officers, agents and employees from any claim, liability, loss, injury or damage arising out of, or in connection with, performance of this Agreement by the Permittee, it's Contractor and/or it's agents, employees or Subcontractors, excepting only loss, injury or damage caused by the sole negligence or willful misconduct of personnel employed by the County. It is the intent of the parties to this Agreement to provide the broadest possible coverage for the County. The Permittee shall reimburse the County for all costs including, but not limited to, attorneys' fees, expenses and liabilities incurred with respect to any litigation in which the Permittee is obligated to indemnify, defend and hold harmless the County under this Agreement.

A. Issuance of a permit authorizing construction does not release the Developer, Permittee or its Engineer from the responsibility for the correction of errors or omissions contained in the plans. If, during the

CONFORMED

course of the construction, the public interest requires a modification of (or departure from) the specifications and/or plans, the County shall have the authority to require:

a. The suspension of work;
b. The necessary modification to the specifications and/or plans; and,
c. To specify the manner in which the same is to be made.

Any cost associated with this Section **II.2.A** shall be the sole responsibility of the Permittee.

3. **Insurance** – The Permittee shall obtain insurance as required by the County in the attached exhibit and shall provide a certificate of insurance verifying such insurance to the County prior to any work being performed. The County, its officers, employees and agents shall be named as additional insured.

4. **Bonds** – The Permittee shall obtain a performance bond in the amount indicated when required by the County as a condition of the permit and shall provide a certified copy of the bond verifying such bond in the amount required by the County.

5. **Bond Release** – If a Performance bond is posted, it will be released by the County after a written request for a final inspection and verification by the County the work has been satisfactorily completed. Release of the Performance bond is subject to the Permittee providing any Maintenance bond or Deferred Maintenance Agreement required by the County.

6. **Damages Caused by Permittee/Repairs** – All necessary repairs resulting from the encroachment permit work shall be made in accordance with County standards and specifications at the sole expense of the Permittee. The Permittee is required to repair any damage caused by the Permittee or the Contractors as a consequence of labor performed under the Permit within the time indicated by the County. If the Permittee fails to make the repairs within the time indicated, the County is authorized to repair the damage and recover all cost incurred, including overhead and administrative costs, from the Permittee, the surety or the insurance carrier.

   A. Prior to any construction activity in the vicinity of the fiber-optic facilities (i.e., conduit, fiber-optic cable, pull-box, splice enclosure, termination panel, and any related fiber-optic improvements), the Permittee or the Contractor shall pothole to locate, identify, and provide necessary precautionary measures to protect the existing fiber-optic facilities within the project limits from being damaged by construction activities. Potholing in dirt areas shall be performed by hand - no power tools or equipment shall be used.

   B. If the fiber-optic facilities are damaged by the Permittee or the Contractor, the Permittee or the Contractor shall make the necessary repair to the damaged fiber-optic facilities in accordance with Section 86.01.06 "Maintaining Existing and/or Temporary Electrical Systems and Traffic

CONFORMED

Communication Systems" of the County Standard Specifications and the following.

C. Repair and replacement of damaged fiber-optic cable and related facilities shall be performed as follows:

a. Within 48 hours of the damage occurring, the Permitee or the Contractor shall temporarily splice the fiber-optic cable using mechanical or fusion splicing, at the sole discretion of the County. After completion of temporary repairs, the County will determine whether the end equipment operates satisfactorily. If not, the County may direct the Permittee to replace the temporary splice within 48 hours. This shall be considered an interim repair only to restore service. The Permittee or the Contractor shall permanently repair other damaged facilities such as conduit and pull-box, unless prior written approved is obtained otherwise from the County.

The repair shall be undertaken in the nearest junction box, by pulling available slack in the cable. If, in the determination of the County, insufficient slack is available, a new junction box shall be installed as directed.

b. Within 30 days after the acceptance of the interim repair by the County, the Permittee or its Contractor shall obtain a modified encroachment permit and replace the damaged cable between the system's end-to-end splice points installed during the initial installation (as shown on the Fiber Splicing Details Map available for review in the Engineering Office of Traffic and Electrical Operations). During this permanent repair process, the fiber-optic cable shall not be disconnected or the equipment communicating on the cable shall not become non-operational for more than 48 hours. A seven (7) day notice shall be given to the Permit Inspection Unit of the Roads and Airports Department by calling (408) 573-2429 or faxing to (408) 441-0143 prior to any work associated with the repair of the fiber-optic cable. The replacement cable shall be of length and type equivalent to the replaced cable. Cable material, installation and testing shall meet the requirements of the County Standard Specifications as follows:

i. Section 86.02.08E "Fiber-optic Cable",
ii. Section 86.02.09C "Installation of Fiber-optic Cable",
iii. Section 86.02.09O(1) "Fiber-optic Connectors",
iv. Section 86.02.09E(2) "Fiber-optic Cable Splicing",
v. Section 86.02.09G "Fiber-optic Splice Enclosure", and
vi. Section 86.02.13D "Fiber-optic Cable Testing". OTDR and power meter tests shall be done after the repair to assure that a light loss is within the maximum allowable loss. This loss shall be determined by comparison of the test results with OTDR test results on file at the County, derived from the most recent test on each fiber. The OTDR test shall be performed on each fiber strand. The power

CONFORMED

meter test shall be performed only on fibers terminated on both ends. Both tests shall be done at 1,550 nm and 1,310 nm. The Permittee or the Contractor shall record all test results and provide the results to the County for review and acceptance. All testing shall be observed by a representative of the County.

D. In the event that the Permittee or the Contractor fail to make the necessary repairs and/or replacement of the fiber-optic facilities within the timeframe as specified herein, the County may perform the necessary repairs and/or replacement, interim and permanent, of the damaged facilities and recover all costs and expenses in accordance with these General Conditions of the Permit.

E. The Permittee or the Contractor shall guarantee the repair work for a period of one (1) year from the date of acceptance of the work by the County in accordance with Section 5.17 "Correction of Work and Guarantee" of the County Standard Specifications.

7. **Private Property** – This Permit shall not be construed as authorization for excavation and/or grading on private property adjacent to the encroachment or any other work for which a separate permit may be required.

   A. This Permit shall not be construed as authorization for any work for which a separate permit may be required – i.e. a driveway permit does NOT include utility work of any kind; a permit to connect water is separate from a permit to connect gas, electric, or communication.

8. **Relocation Responsibility** – In the event future improvement of the road necessitates relocation of the encroachment authorized by this Permit, the Permittee shall relocate same at their sole expense.

9. **Contracts and Agreements** – This Permit does not release the Permittee from any liabilities contained in other agreements or contracts with the County and other municipal agencies.

10. **Acceptance** – Commencement of any work under this Permit shall constitute acceptance of the conditions and requirements of the permit for the installation or future maintenance of the encroachment whether or not the Permit is signed by said person or an authorized representative of said person, firm or corporation.

CONFORMED

County of Santa Clara – Roads and Airports Department
101 Skyport Drive, San Jose, CA 95110
(408) 573-2475 www.countyroads.org

STORMWATER POLLUTION PREVENTION BEST MANAGEMENT PRACTICES CHECKLIST FOR ALL ACTIVITIES WITHIN THE RIGHT OF WAY (ROW) ACKNOWLEDGEMENT SHEET

Introduction

The County of Santa Clara Roads and Airports Department requires applicants for encroachment permits to comply with certain General Provisions related to stormwater pollution prevention. Construction activities related to maintenance and improvement of existing utilities and installation of new utilities that disturb less than one acre of land are exempt from Encroachment Permit General Provision 16.A. but must implement best management practices (BMPs) to prevent stormwater pollution.

Permittee shall determine the appropriate BMPs to be checked below for the activities being performed within or adjacent to the County right-of-way as part of the permitted project. Additional BMPs may be required if field conditions change or additional stormwater pollution prevention measures are required by the County. For more information, please contact the Roads and Airports Department at (408) 573-2429.

Sediment Control BMPs

X *SE-5 Fiber Rolls*

A fiber roll consists of straw, coir, or other biodegradable materials bound into a tight tubular roll wrapped by netting, which can be photodegradable or natural. When fiber rolls are placed at the bottom of slopes along contours, they intercept runoff, reduce its velocity, release the runoff as sheet flow, allow sedimentation, and also reduce sheet and rill erosion until vegetation is established

X *SE-7 Street Sweeping and Vacuuming*

Sweeping and vacuuming are needed to remove sediment wherever it is tracked from the project site onto public or private paved streets and roads, typically at points of egress. After sweeping is finished, sweeper waste should be properly disposed of at an approved dumpsite.

X *SE-10 Storm Drain Inlet Protection*

Storm drain inlet protection consists of a sediment filter or an impounding area in, around or upstream of a storm drain, drop inlet, or curb inlet to prevent sediment from discharging to the storm drain. Storm drain inlet protection measures temporarily pond runoff before it enters the storm drain, allowing sediment to settle. Temporary geotextile storm drain inserts that attach underneath storm drain grates to capture and filter storm water can also be used. Inlet protection options can be used in combination with the following BMPs:

- ☐ *SE-6 Gravel Bag Berm* - A gravel bag berm is a series of gravel-filled bags placed on a level contour to intercept sheet flows, pond runoff, and allow sediment to settle out.
- ☐ *SE-8 Sandbag Barrier* - A sandbag barrier consists of a row of sand-filled bags placed on a level contour to intercept sheet flows, pond runoff, and allow sediment to settle out. Sandbag barriers should generally be used in conjunction with temporary soil stabilization.
- X *TC-1 Stabilized Construction Entrance/Exit*

  The purpose of a stabilized construction entrance/exit is to reduce or eliminate the tracking of sediment onto public rights of way. A stabilized construction entrance /exit is a pad of aggregate underlain with filter cloth located at a point where traffic will be entering or leaving a construction site.

CONFORMED

FOR BIDDING PURPOSES ONLY
27-160191

Good Site Management BMPs

X *WM-1Materials Delivery and Storage*
The discharge of stormwater pollutants from construction material delivery and storage areas can be prevented or reduced by minimizing the storage of hazardous materials onsite, storing materials in watertight containers and/or containing the storage area with a berm or on an enclosed pad, and conducting regular inspections.

☐ *WM-3 Stockpile Management*
All stockpiles of construction materials (such as soil, soil amendments, sand, pressure treated wood, and paving materials such as Portland cement concrete rubble, asphalt concrete, asphalt concrete rubble, aggregate base, aggregate sub-base or pre-mixed aggregate, and asphalt binder) should be covered with a tarp and protected with a temporary linear sediment barrier prior to the onset of precipitation.

X *Waste Management*
Waste management includes storing materials properly to reduce the possibility of spills, stopping the source of spills, and the immediate containment, clean-up and proper disposal of spilled materials. Solid, liquid and sanitary waste should be properly disposed. Designated waste collection areas and containers should be provided and regular disposal services arranged. All waste containers should be covered. Temporary sanitary facilities should be located away from storm drains and traffic areas.

X *WM-8 Concrete Waste Management*
Stockpile management BMPs should be used to ensure that construction materials, including mortar, concrete, stucco, cement and block, and their associated wastes do not come into contact with stormwater flows. Concrete trucks should be washed only in contained concrete washout areas so that there is no discharge of concrete waste onto site soils or into storm drains.

Non Stormwater Management

☐ *NS-3 Paving and Grinding Operations*
Stockpile management, sediment control and inlet protection BMPs should be implemented to prevent paving and grinding materials or wastes from entering storm drains. When feasible, paving during the rainy season should be avoided. Waste materials should not be washed or swept into storm drains. During saw-cutting and grinding operations, use as little water as possible. Block storm drain inlets using inlet protection BMPs and/or use absorbent materials to contain slurry. Remove saw-cut slurry, using a shovel, vacuum, or dry sweeping, as soon as possible.

X *NS-6 Illicit Discharge*
The site should be inspected before beginning the job for evidence of illicit connections to the storm drain, illegal dumping or discharges. Any pre-existing conditions should be documented and the owner notified. Employees and sub-contractors should be trained to use BMPs to prevent any material from entering storm drains.

X *NS-12 Concrete Curing, NS-13 Concrete Finishing*
Storm drain inlet protection BMPs should be implemented before conducting concrete curing and/or sandblasting. Water from curing and sandblasting operations should be directed to contained collection areas (so that there is no discharge to underlying soils or surrounding areas) and then properly disposed.

CONFORMED

Good Site Management BMPs

X *WM-1Materials Delivery and Storage*

The discharge of stormwater pollutants from construction material delivery and storage areas can be prevented or reduced by minimizing the storage of hazardous materials onsite, storing materials in watertight containers and/or containing the storage area with a berm or on an enclosed pad, and conducting regular inspections.

☐ *WM-3 Stockpile Management*

All stockpiles of construction materials (such as soil, soil amendments, sand, pressure treated wood, and paving materials such as Portland cement concrete rubble, asphalt concrete, asphalt concrete rubble, aggregate base, aggregate sub-base or pre-mixed aggregate, and asphalt binder) should be covered with a tarp and protected with a temporary linear sediment barrier prior to the onset of precipitation.

X *Waste Management*

Waste management includes storing materials properly to reduce the possibility of spills, stopping the source of spills, and the immediate containment, clean-up and proper disposal of spilled materials. Solid, liquid and sanitary waste should be properly disposed. Designated waste collection areas and containers should be provided and regular disposal services arranged. All waste containers should be covered. Temporary sanitary facilities should be located away from storm drains and traffic areas.

X *WM-8 Concrete Waste Management*

Stockpile management BMPs should be used to ensure that construction materials, including mortar, concrete, stucco, cement and block, and their associated wastes do not come into contact with stormwater flows. Concrete trucks should be washed only in contained concrete washout areas so that there is no discharge of concrete waste onto site soils or into storm drains.

Non Stormwater Management

☐ *NS-3 Paving and Grinding Operations*

Stockpile management, sediment control and inlet protection BMPs should be implemented to prevent paving and grinding materials or wastes from entering storm drains. When feasible, paving during the rainy season should be avoided. Waste materials should not be washed or swept into storm drains. During saw-cutting and grinding operations, use as little water as possible. Block storm drain inlets using inlet protection BMPs and/or use absorbent materials to contain slurry. Remove saw-cut slurry, using a shovel, vacuum, or dry sweeping, as soon as possible.

X *NS-6 Illicit Discharge*

The site should be inspected before beginning the job for evidence of illicit connections to the storm drain, illegal dumping or discharges. Any pre-existing conditions should be documented and the owner notified. Employees and sub-contractors should be trained to use BMPs to prevent any material from entering storm drains.

X *NS-12 Concrete Curing, NS-13 Concrete Finishing*

Storm drain inlet protection BMPs should be implemented before conducting concrete curing and/or sandblasting. Water from curing and sandblasting operations should be directed to contained collection areas (so that there is no discharge to underlying soils or surrounding areas) and then properly disposed.

CONFORMED

FOR BIDDING PURPOSES ONLY
27-160191

County of Santa Clara – Roads and Airports Department
101 Skyport Drive, San Jose, CA 95110
(408) 573-2475 www.countyroads.org

STORMWATER POLLUTION PREVENTION BEST MANAGEMENT PRACTICES CHECKLIST FOR ALL ACTIVITIES WITHIN THE RIGHT OF WAY (ROW) ACKNOWLEDGEMENT SHEET

Introduction

The County of Santa Clara Roads and Airports Department requires applicants for encroachment permits to comply with certain General Provisions related to stormwater pollution prevention. Construction activities related to maintenance and improvement of existing utilities and installation of new utilities that disturb less than one acre of land are exempt from Encroachment Permit General Provision 16.A. but must implement best management practices (BMPs) to prevent stormwater pollution.

Permittee shall determine the appropriate BMPs to be checked below for the activities being performed within or adjacent to the County right-of-way as part of the permitted project. Additional BMPs may be required if field conditions change or additional stormwater pollution prevention measures are required by the County. For more information, please contact the Roads and Airports Department at (408) 573-2429.

Sediment Control BMPs

X *SE-5 Fiber Rolls*

A fiber roll consists of straw, coir, or other biodegradable materials bound into a tight tubular roll wrapped by netting, which can be photodegradable or natural. When fiber rolls are placed at the bottom of slopes along contours, they intercept runoff, reduce its velocity, release the runoff as sheet flow, allow sedimentation, and also reduce sheet and rill erosion until vegetation is established

X *SE-7 Street Sweeping and Vacuuming*

Sweeping and vacuuming are needed to remove sediment wherever it is tracked from the project site onto public or private paved streets and roads, typically at points of egress. After sweeping is finished, sweeper waste should be properly disposed of at an approved dumpsite.

X *SE-10 Storm Drain Inlet Protection*

Storm drain inlet protection consists of a sediment filter or an impounding area in, around or upstream of a storm drain, drop inlet, or curb inlet to prevent sediment from discharging to the storm drain. Storm drain inlet protection measures temporarily pond runoff before it enters the storm drain, allowing sediment to settle. Temporary geotextile storm drain inserts that attach underneath storm drain grates to capture and filter storm water can also be used. Inlet protection options can be used in combination with the following BMPs:

- ☐ *SE-6 Gravel Bag Berm* - A gravel bag berm is a series of gravel-filled bags placed on a level contour to intercept sheet flows, pond runoff, and allow sediment to settle out.
- ☐ *SE-8 Sandbag Barrier* - A sandbag barrier consists of a row of sand-filled bags placed on a level contour to intercept sheet flows, pond runoff, and allow sediment to settle out. Sandbag barriers should generally be used in conjunction with temporary soil stabilization.

X *TC-1 Stabilized Construction Entrance/Exit*

The purpose of a stabilized construction entrance/exit is to reduce or eliminate the tracking of sediment onto public rights of way. A stabilized construction entrance /exit is a pad of aggregate underlain with filter cloth located at a point where traffic will be entering or leaving a construction site.

CONFORMED

County of Santa Clara – Roads and Airports Department
101 Skyport Drive, San Jose, CA 95110
(408) 573-2475 www.countyroads.org

References

California Stormwater Quality Association (CASQA) Construction BMP Handbook, November 2009. (Available by subscription only at www.casqa.org)

State Water Resources Control Board, NPDES General Permit for Storm Water Discharges Associated with Construction Activity, Water Quality Order 2009-0009-DWQ, September 2009 (effective July 1, 2010).

Santa Clara Valley Urban Runoff Pollution Prevention Program, 2004 Urban Runoff Management Plan, Performance Standard and Supporting Documents for Public Streets, Roads, and Highways Operation and Maintenance, September 1, 2004.

Acknowledgement/ Agreement:

I (We), the Owner(s) of the subject property, the Utility Company, or the applicant performing work in the County Road Right of Way (ROW) have read and understood the Roads and Airports Best Management Practices Checklist for Stormwater Pollution Prevention and shall ensure that all work occurring within the County of Santa Clara ROW requires the implementation of construction Best Management Practices (BMPs) for storm water pollution prevention in conformance with either the Municipal Regional Permit (north county) or National Pollutant Discharge Elimination System Phase II Small Municipal Separate Storm Sewer System General Permit (south county).

Santa Clara Valley Water District	Judy Nam, Project Manager
Print Owner, Utility Company's Representative or Applicant Name	Owner, Utility's Representative, or Applicant Signature
Berryessa Creek at Montague Expressway Cossing, Milpitas, CA	April 14, 2016
Print Project Location Legibly	Date

CONFORMED

For Office Staff only:			
ENCROACHMENT PERMIT NO(S):			
LAND DEVELOPMENT FILE NO:			
BUILDING PLAN CHECK NO:			
RWQCB SF:	X	RWQCB Central Coast:	

FOR BIDDING PURPOSES ONLY
27-160191

CONFORMED

County of Santa Clara

Roads and Airports Department

101 Skyport Drive
San Jose, California 95110

FOR BIDDING PU... ES ONLY

27-160191

Encroachment Permit No.: 27-160191 Location: Montague Expwy crossing Berryessa Creek / S. Mipitas Blvd

Additional Special Provisions – Expressways Only

Work is subject to County Ordinance Code B-17, County Standard Specifications, County Standard Plans and Details, State of California, Department of Transportations (Caltrans) Standard Specifications and Standard Plans, latest issue.

Only boxes with are ☑ apply to this permit.

Warning signs and public safety and safe work practices:

☑ 1. Construction in road right-of-way shall be signed in accordance with the "Manual of Uniform Traffic Control Devices", 2012 Edition from State of California, Department of Transportation (Caltrans).
☑ 2. Hours of work and lane closure shall be in accordance with approved traffic control plans.
☑ 3. All construction work shall be performed in accordance with CAL O.S.H.A. Safety Orders, latest issue.

Expressway work by Permit:

☐ 1. The expressway pavement shall not be cut.
☑ 2. Allowed pavement cuts shall be sawcut, backfilled in accordance with Section 19.03 of the County Standard Specifications and paved with Type A Asphalt, ¾" coarse asphalt concrete, placed in lifts of 6", 6" and a 3" final lift (surface course) of ½" medium asphalt concrete.
☑ 3. Installation of pipes and conduits shall be by boring and jacking or direction bore methods.
☑ 4. If removal of existing fence or wall is required, it shall be replaced in kind.
☑ 5. No equipment or materials shall be stored in right-of-way overnight, unless prior written permission is obtained from the Roads and Airports Department.
☑ 6. Flagmen shall be required at any time equipment or men are crossing or working within the expressway area.
☑ 7. All landscaping removed or damaged shall be replaced in kind and approved by the County Project Inspector in the field.

Pavement damage caused by construction shall be repaired. Temporary or permanent lane realignment requiring removal of pavement stripes, markings/markers, or other construction activities causing pavement surface damage shall be repaired by use of Caltrans standard slurry seal Type 2. The placement of slurry seal, as part of the corrective repairs to a damaged roadway/lane realignment shall involve sealing the entire area. Pavement cracked/depressed by construction equipment or methods shall be removed and replaced in kind.

Notice

Indian Burial Sites: Upon discovering or unearthing any burial site as evidence by human skeletal remains or artifacts, the person making such discovery shall immediately notify the County Coroner at (408) 793-1900 and the Office of Human Relations at (408) 299-2206. No further disturbance of the site may be made except as authorized by the County Coordinator of Indian Affairs in accordance with the provisions of the state law and Chapter 2, Division B6 of the County Ordinance Code.

Underground Utilities: Notify U.S.A. Location Service at (800) 227-2600, 48 hours prior to any trenching or excavation in the road right-of-way.

Detours: For information regarding detours, contact Encroachment Permits at (408) 573 - 2475.

Material Submittals: Material Submittals are required, in accordance with the County's Standard Specifications Section 86.01.04 "Submittals", for work involving County maintained signals, lighting and electrical systems. Submittals shall be furnished to the County Roads and Airports Department's right-of-way Project Inspector. Materials furnished/installed without the Roads and Airports Department's prior approval may be subject to rejection/removal at the permittee's expense.

CONFORMED

Board of Supervisors: Mike Wasserman, Cindy Chavez, Dave Cortese, Ken Yeager, S. Joseph Simitian
County Executive: Jeffrey V. Smith

CONFORMED

EXHIBIT C

Road's Department Encroachment Permit Time Extension Fee Schedule - August 2006

Task	Current Fee	3 Months	6 Months	9 Months	12 Months
Minor Permits	N/A	25% of Original Permit Fee	50% of Original Permit Fee	75% of Original Permit Fee	100% of Original Permit Fee
Major Permits*	N/A	All previous cost must be paid before an extension can be issued	All previous cost must be paid before an extension can be issued	All previous cost must be paid before an extension can be issued	All previous cost must be paid before an extension can be issued

* The applicants would be charged actual issuance, plan check, and inspection cost incurred for these permits.

FOR BIDDING PURPOSES ONLY
27-16019

CONFORMED

CONFORMED

APPENDIX L

Public Entities indemnification and

INSURANCE- CONTRACTOR-Construction Risk

Indemnity

To the extent not prohibited by applicable statute, the Contractor shall indemnify, defend and hold harmless the officers, agents, affiliates and employees of:

- Santa Clara Valley Water District (SCVWD), County of Santa Clara ,and
- Santa Clara County, including members of the Board of Supervisors of the County of Santa Clara,
- The City of Milpitas

individually and collectively, as additional insureds , (individually an "Indemnified Party" or collectively ("Indemnified Parties")) from and against any and all loss, damage, injury, liability, claim, demand, cost or expense (including, without limitation, attorney's, consultant's and expert's fees, and court costs), fine or penalty (collectively, "Loss") incurred by any person (including, without limitation, any Indemnified Party, Contractor, or any employee of Contractor or of any Indemnified Party) arising out of or in any manner connected with (i) any work performed by Contractor, or (ii) any act or omission of Contractor, its officers, agents or employees, or (iii) any breach of this Agreement by Contractor.

b. The right to indemnity under this contract shall accrue upon occurrence of the event giving rise to the Loss, and shall apply regardless of any negligence or strict liability of any Indemnified Party, except where the Loss is caused by the sole active negligence of an Indemnified Party as established by the final judgment of a court of competent jurisdiction. The sole active negligence of any Indemnified Party shall not bar the recovery of any other Indemnified Party.

c. Contractor expressly and specifically assumes potential liability for claims or actions brought by Contractor's own employees. Contractor waives any immunity it may have under worker's compensation or industrial insurance acts to indemnify the Indemnified Parties under this construction contract. Contractor acknowledges that this waiver was mutually negotiated by the parties hereto.

d. No court or jury findings in any employee's suit pursuant to any worker's compensation act or the Federal Employers' Liability Act against a party to this Agreement may be relied upon or used by Contractor in any attempt to assert liability against any Indemnified Party.

e. The provisions of the indemnity as described shall survive the completion of any work performed by Contractor or the termination or expiration of this Agreement. In no event shall these or any other provisions of this Agreement be deemed to limit any liability Contractor may have to any Indemnified Party by statute or under common law.

Insurance requirements

Please refer to the insurance requirements listed below.

Without limiting the Contractor's indemnification of, or liability to, the Indemnified Parties, the Contractor must provide and maintain at its own expense, during the term of this Agreement, or as may be further required herein, the following insurance coverages and provisions:

CONFORMED

APPENDIX L

Public Entities indemnification and

INSURANCE- CONTRACTOR-Construction Risk

Contractor must provide its insurance broker(s)/agent(s) with a copy of these requirements and warrants that these requirements have been reviewed by Contractor's insurance agent(s) and/or broker(s), who have been instructed by Contractor to procure the insurance coverage required herein.

In addition to certificates, Contractor must furnish the Contracting Officer with copies of original endorsements affecting coverage required by this Appendix. The certificates and endorsements are to be signed by a person authorized by that insurer to bind coverage on its behalf. **All endorsements and certificates are to be received and approved by the Contracting Officer before the contract commences**. In the event of a claim or dispute, the Indemnified Parties and the Contracting Officer have the right to require Contractor's insurer to provide complete, certified copies of all required pertinent insurance policies, including endorsements affecting the coverage required by this Appendix.

Contractor must, at its sole cost and expense, procure and maintain during the entire period of this Agreement the following insurance coverage(s).

Required Coverages

1. Commercial General/Business Liability Insurance with coverage as indicated:

$5,000,000 per occurrence / **$5,000,000** aggregate limits for bodily injury and property damage

$5,000,000 Products/Completed Operations aggregate (to be maintained for at least three (3) years following acceptance of the work by the Contracting Officer.

General Liability insurance must include:

a. Coverage at least as broad as found in standard ISO form CG 00 01.
b. Premises and Operations
c. Contractual Liability expressly including liability assumed under this contract.
d. Owners and Contractors' Protective liability
e. Severability of Interest
f. Explosion, Collapse and Underground Hazards, (X,C, and U)
g. Broad Form Property Damage liability
h. If the standard ISO Form wording for "OTHER INSURANCE," or other comparable wording, is not contained in Contractor's liability insurance policy, an endorsement must be provided that said insurance will be primary insurance and any insurance or self-insurance maintained by the Indemnified Parties will be in excess of Consultant's insurance and will not contribute to it.

2. Business Auto Liability Insurance with coverage as indicated:

$2,000,000 combined single limit for bodily injury and property damage per occurrence, covering all owned, non-owned and hired vehicles.

3. Builders' Risk (Course of Construction) Insurance

CONFORMED

APPENDIX L

Public Entities indemnification and

INSURANCE- CONTRACTOR-Construction Risk

Covering all risks of loss less policy exclusions for an amount equal to the completed value of the project with no coinsurance penalty provisions. Builder's Risk policy shall name the Indemnified Parties as loss payee's.

4. Workers' Compensation and Employer's Liability Insurance

Statutory California Workers' Compensation coverage covering all work to be performed for the contract.

Employer Liability coverage for not less than $1,000,000 per occurrence.

General Requirements

With respect to all coverages noted above, the following additional requirements apply:

1. **Additional Insured Endorsement(s)** Contractor must provide an additional insured endorsement for Commercial General/Business Liability and Business Automobile liability coverage naming, the Indemnified Parties, its Directors, officers, employees, and agents, individually and collectively, as additional insureds, and must provide coverage for acts, omissions, etc. arising out of the named insureds' activities and work. Other public entities may also be added to the additional insured endorsement as applicable and the Contractor will be notified of such requirement(s) by the Contracting Officer.

   (**NOTE:** Additional insured language on the Certificate of Insurance is **NOT** acceptable without a separate endorsement such as Form CG 20 10, CG 2033, CG 2037. Note: Editions dated 07/04 are not acceptable)

2. **Primacy Clause:** Contractor's insurance must be primary with respect to any other insurance which may be carried by the Indemnified Parties, and the Indemnified Parties' coverage must not be called upon to contribute or share in the loss.

3. **Cancellation Clause Revision:** The Certificate of Insurance **MUST** provide **30 days notice of cancellation, (10 days notice for non-payment of premium). NOTE: The standard wording in the ISO Certificate of Insurance is not acceptable.** The following words must be crossed out or deleted from the standard cancellation clause: "...endeavor to..." AND "...but failure to mail such notice must impose no obligation or liability of any kind upon the company, its agents or representatives."

4. **Acceptability of Insurers:** All coverages must be issued by companies admitted to conduct business in the State of California, which hold a current policy holder's alphabetic and financial size category rating of not less than A- V, according to the current Best's Key Rating Guide or a company of equal financial stability that is approved by the Contracting Officer.

5. **Self-Insured Retentions or Deductibles:** Any deductibles or self-insured retentions must be declared to and approved by the Contracting Officer. At the option of the Contracting Officer, either: the insurer shall reduce or eliminate such deductibles or self-insured retentions as respects to all insured public entities as named above, its officers, officials,

CONFORMED

employees and volunteers; or the Contractor shall provide a financial guarantee satisfactory to the Entity guaranteeing payment of losses and related investigations, claim administration, and defense expenses.

6. **Subcontractors:** Should any of the work under this Agreement be sublet, the Contractor must require each of its subcontractors of any tier to carry the aforementioned coverages, or Contractors may insure subcontractors under its own policies.

7. **Amount of Liability not Limited to Amount of Insurance:** The insurance procured by Contractor for the benefit of the Indemnified Parties must not be deemed to release or limit any liability of Contractor. Damages recoverable by the Indemnified Parties for any liability of Contractor must, in any event, not be limited by the amount of the required insurance coverage.

8. **Coverage to be Occurrence Based:** All coverage must be occurrence-based coverage. Claims-made coverage is not allowed.

9. **Waiver of Subrogation:** : Contractor agrees on to waive subrogation against any of the Indemnified Parties to the extent any loss suffered by Contractor is covered by any Commercial General Liability policy, Automobile policy, Workers' Compensation policy, or Builders' Risk policy described in Required Coverages above. Contractor agrees to advise its broker/agent/insurer about this provision and obtain any endorsements, if needed, necessary to ensure the insurer agrees.

10**.** **Non-compliance:** The Contracting Officer reserves the right to withhold payments to the Contractor in the event of material noncompliance with the insurance requirements outlined above.

11**.** **Please mail the certificates and endorsements to:**

US Army Corps Of Engineer
Contracting Division
ATTN: CECT-SPN
1455 MARKET ST., 17TH FL
San Francisco, California 94103-1398

IMPORTANT: **On the certificate of insurance, please note either the name of the project or the name of the District contact person or unit for the contract.**

If your insurance broker has any questions please advise him/her to call Mr. James Garror , Contract Specialist (415) 503-6988.

CONFORMED