MAP AND CONSTRUCTION PLAN

FOR

SAN FRANCISQUITO CREEK FLOOD REDUCTION, ECOSYSTEM RESTORATION, AND RECREATION PROJECT

SAN FRANCISCO BAY TO HIGHWAY 101
CONTRACT NO. C0613

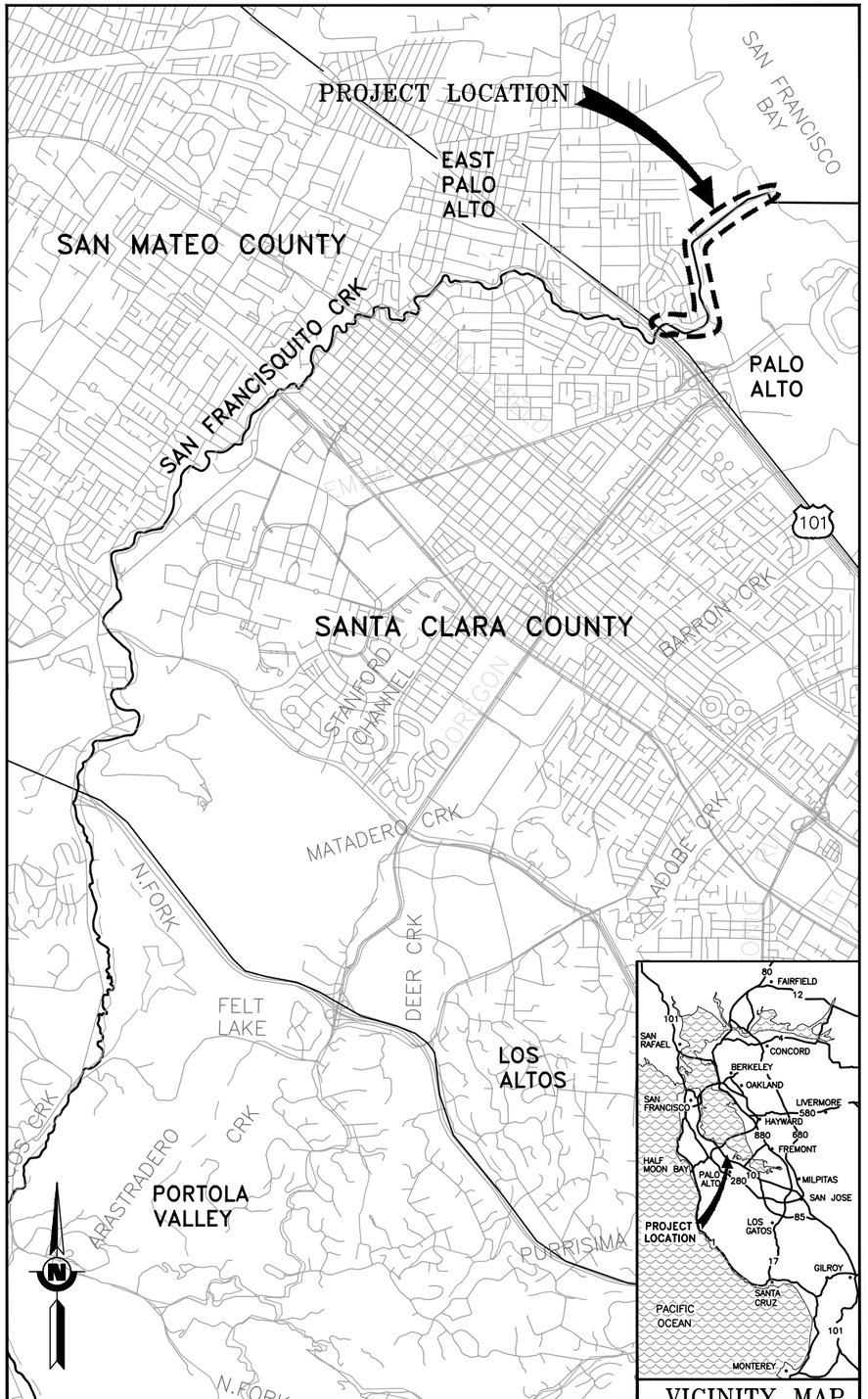

LOCATION MAP
SCALE: 1"=2,500'

SAN FRANCISQUITO CREEK
JOINT POWERS AUTHORITY

Santa Clara Valley Water District

APPROVED BY:

SAEID HOSSEINI, P.E. — DATE
ENGINEERING UNIT MANAGER
DESIGN AND CONSTRUCTION UNIT 1
SANTA CLARA VALLEY WATER DISTRICT

ACCEPTED BY:

MELANIE RICHARDSON, P.E. — DATE
DEPUTY OPERATING OFFICER
WATERSHEDS DESIGN AND CONSTRUCTION DIVISION
SANTA CLARA VALLEY WATER DISTRICT

LEN MATERMAN — DATE
EXECUTIVE DIRECTOR
SAN FRANCISQUITO CREEK JOINT POWERS AUTHORITY

PREPARED BY:

HDR

SERGIO JIMENEZ, P.E. — DATE
WATER RESOURCES MANAGEMENT SECTOR MANAGER

REGISTERED PROFESSIONAL ENGINEER
SERGIO E. JIMENEZ
C 055698
Exp. 12/31/16
CIVIL
STATE OF CALIFORNIA

PROJECT NUMBER
26284002
SHEET CODE:
G-1
SHEET NUMBER: 1 OF 126

USERNAME: HSUAREZ Thu 18 Feb 2016 07:32pm
FILENAME: C:\pwworking\sac\d0171341\G-01
DOCUMENT NUMBER: SFC_LP-G-1028-XXXXXXX

SHEET CODE	DESCRIPTION	PAGE NO.
	GENERAL	
G-1	LOCATION MAP AND TITLE SHEET	1 OF 126
G-2	DRAWING INDEX	2 OF 126
G-3	GENERAL SITE PLAN	3 OF 126
G-4	ABBREVIATIONS, LEGEND AND GENERAL NOTES	4 OF 126
G-5	UTILITY AND LOCAL AGENCY CONTACTS, GENERAL NOTES, AND BASIS OF DESIGN	5 OF 126
G-6	CITY OF PALO ALTO SWPPP REQUIREMENTS	6 OF 126
G-7	SURVEY CONTROL AND SETTLEMENT PLATE LOCATIONS	7 OF 126
G-8	SURVEY CONTROL AND SETTLEMENT PLATE LOCATIONS	8 OF 126
G-9	STAGING AREA AND ACCESS POINTS, TCE LINE AND CURVE PLAN, RUBBLE MOUND LIMITS	9 OF 126
G-10	STAGING AREA AND ACCESS POINTS, TCE LINE AND CURVE PLAN, RUBBLE MOUND LIMITS	10 OF 126
G-11	LEVEE ALIGNMENT RIGHT BANK & LEFT BANK LINE & CURVE PLAN	11 OF 126
G-12	LEVEE ALIGNMENT RIGHT BANK & LEFT BANK LINE & CURVE PLAN	12 OF 126
G-13	LEVEE ALIGNMENT RIGHT BANK & LEFT BANK LINE & CURVE TABLE	13 OF 126
G-14	C-LINE LINE AND CURVE TABLE, TCE ALIGNMENT LINE & CURVE TABLE	14 OF 126
G-15	LEVEE STATIONING AND SHEET LAYOUT PLAN	15 OF 126
	CIVIL	
C-1	PLAN AND PROFILE – (R-LINE) STA 0+00 TO 8+00	16 OF 126
C-2	PLAN AND PROFILE – (R-LINE) STA 8+00 TO 16+00	17 OF 126
C-3	PLAN AND PROFILE – (R-LINE) STA 16+00 TO 24+00	18 OF 126
C-4	PLAN AND PROFILE – (R-LINE) STA 24+00 TO 32+00	19 OF 126
C-5	PLAN AND PROFILE – (R-LINE) STA 32+00 TO 39+00	20 OF 126
C-6	PLAN AND PROFILE – (R-LINE) STA 39+00 TO 48+00	21 OF 126
C-7	PLAN AND PROFILE – (R-LINE) STA 48+00 TO 57+00	22 OF 126
C-8	PLAN AND PROFILE – (R-LINE) STA 57+00 TO 66+00	23 OF 126
C-9	PLAN AND PROFILE – (R-LINE) STA 66+00 TO 75+54	24 OF 126
C-10	PLAN AND PROFILE – (L-LINE) STA 6+00 TO 14+00	25 OF 126
C-11	PLAN AND PROFILE – (L-LINE) STA 14+00 TO 22+00	26 OF 126
C-12	PLAN AND PROFILE – (L-LINE) STA 22+00 TO 31+00	27 OF 126
C-13	PLAN AND PROFILE – (L-LINE) STA 31+00 TO 40+00	28 OF 126
C-14	PLAN AND PROFILE – (L-LINE) STA 40+00 TO 47+50	29 OF 126
C-15	PLAN AND PROFILE – (L-LINE) STA 47+50 TO 57+00	30 OF 126
C-16	PLAN AND PROFILE – (L-LINE) STA 57+00 TO 66+00	31 OF 126
C-17	PLAN AND PROFILE – (L-LINE) STA 66+00 TO 76+50	32 OF 126
C-18	PLAN AND PROFILE – RAMP 'A' (R-LINE) PLAN AND PROFILE – RAMP 'B' (L-LINE)	33 OF 126
C-19	PLAN AND PROFILE – RAMP 'C' (C-LINE)	34 OF 126
C-20	PLAN AND PROFILE – FRIENDSHIP ISLAND GRADING PLAN – PEDESTRIAN RAMP	35 OF 126
C-21	PLAN AND PROFILE – LEFT BANK LEVEE – ACCESS RAMP	36 OF 126
C-22	PLAN AND PROFILE – INTERNATIONAL SCHOOL PEDESTRIAN RAMP	37 OF 126
C-23	PLAN – HAMMERHEAD TURNAROUND	38 OF 126
C-24	TYPICAL LEVEE SECTIONS – R-LINE	39 OF 126
C-25	TYPICAL LEVEE SECTIONS – R-LINE	40 OF 126
C-26	TYPICAL LEVEE SECTIONS – R-LINE	41 OF 126
C-27	TYPICAL LEVEE SECTIONS – R-LINE	42 OF 126
C-28	TYPICAL LEVEE SECTIONS – L-LINE	43 OF 126
C-29	TYPICAL LEVEE SECTIONS – L-LINE	44 OF 126
C-30	TYPICAL LEVEE SECTIONS – L-LINE	45 OF 126
C-31	TYPICAL LEVEE SECTIONS – L-LINE	46 OF 126
C-32	TYPICAL LEVEE SECTIONS – L-LINE	47 OF 126
C-33	TYPICAL SECTIONS	48 OF 126
C-34	TYPICAL SECTION –ROCK SLOPE PROTECTION DETAIL – FOLDABLE BOLLARD	49 OF 126
C-35	DETAILS – FENCE	50 OF 126
C-36	DETAILS – PIPES	51 OF 126
C-37	DETAILS – SECURITY FENCE	52 OF 126
C-38	DETAILS – STOPLOG CLOSURE	53 OF 126
C-39	DETAILS – SETTLEMENT PLATE, DETAILS – TRM INSTALLATION	54 OF 126
C-40	UTILITY SHEET LAYOUT PLAN – OVERALL LAYOUT	55 OF 126
C-41	UTILITY PLAN – STA 6+00 TO STA 18+00 (C-LINE)	56 OF 126
C-42	UTILITY PLAN – STA 18+00 TO STA 31+00 (C-LINE)	57 OF 126
C-43	UTILITY PLAN – STA 30+00 TO STA 39+00 (C-LINE)	58 OF 126
C-44	UTILITY PLAN – STA 39+00 TO STA 51+00 (C-LINE)	59 OF 126
C-45	UTILITY PLAN – STA 51+00 TO STA 63+00 (C-LINE)	60 OF 126
C-46	UTILITY PLAN – STA 63+00 TO STA 73+00 (C-LINE)	61 OF 126
C-47	UTILITY PLAN – STA 70+00 TO STA 77+50 (C-LINE)	62 OF 126
C-48	PLAN AND PROFILE – NEW UTILITIES	63 OF 126
C-49	PLAN AND PROFILE/DETAIL – STORM DRAIN – MITIGATION AREA	64 OF 126
C-50	ROOT WAD REVETMENT DETAILS	65 OF 126
	CROSS SECTIONS	
X-1	CROSS SECTIONS – (C-LINE) STA 3+00 TO 6+00	66 OF 126
X-2	CROSS SECTIONS – (C-LINE) STA 7+00 TO 10+00	67 OF 126
X-3	CROSS SECTIONS – (C-LINE) STA 11+00 TO 14+00	68 OF 126
X-4	CROSS SECTIONS – (C-LINE) STA 15+00 TO 18+00	69 OF 126
X-5	CROSS SECTIONS – (C-LINE) STA 19+00 TO 22+00	70 OF 126
X-6	CROSS SECTIONS – (C-LINE) STA 23+00 TO 26+00	71 OF 126
X-7	CROSS SECTIONS – (C-LINE) STA 27+00 TO 30+00	72 OF 126
X-8	CROSS SECTIONS – (C-LINE) STA 31+00 TO 34+00	73 OF 126
X-9	CROSS SECTIONS – (C-LINE) STA 35+00 TO 38+00	74 OF 126
X-10	CROSS SECTIONS – (C-LINE) STA 39+00 TO 42+00	75 OF 126
X-11	CROSS SECTIONS – (C-LINE) STA 43+00 TO 46+00	76 OF 126
X-12	CROSS SECTIONS – (C-LINE) STA 47+00 TO 50+00	77 OF 126
X-13	CROSS SECTIONS – (C-LINE) STA 51+00 TO 54+00	78 OF 126
X-14	CROSS SECTIONS – (C-LINE) STA 55+00 TO 58+00	79 OF 126
X-15	CROSS SECTIONS – (C-LINE) STA 59+00 TO 62+00	80 OF 126
X-16	CROSS SECTIONS – (C-LINE) STA 63+00 TO 66+00	81 OF 126
X-17	CROSS SECTIONS – (C-LINE) STA 67+00 TO 70+00	82 OF 126
X-18	CROSS SECTIONS – (C-LINE) STA 71+00 TO 74+00	83 OF 126
X-19	CROSS SECTIONS – (C-LINE) STA 75+00 TO 77+62	84 OF 126
	STRUCTURAL	
S-1	SHEET PILE DETAILS NO. 1	85 OF 126
S-2	SHEET PILE DETAILS NO. 2	86 OF 126
S-3	SHEET PILE DETAILS NO. 3	87 OF 126
S-4	SHEET PILE DETAILS NO. 4	88 OF 126
S-5	SHEET PILE DETAILS NO. 5	89 OF 126
S-6	GENERAL PLAN	90 OF 126
S-7	FOUNDATION PLAN	91 OF 126
S-8	ABUTMENT DETAILS NO. 1	92 OF 126
S-9	ABUTMENT DETAILS NO. 2	93 OF 126
S-10	TYPICAL SECTIONS	94 OF 126
S-11	MISCELLANEOUS DETAILS NO. 1	95 OF 126
S-12	MISCELLANEOUS DETAILS NO. 2	96 OF 126
	LANDSCAPING	
L-1	PLANTING PLAN (C-LINE) – STA 1+50 TO 19+50	97 OF 126
L-2	PLANTING PLAN (C-LINE) – STA 19+50 TO 29+50	98 OF 126
L-3	PLANTING PLAN (C-LINE) – STA 29+50 TO 40+00	99 OF 126
L-4	PLANTING PLAN (C-LINE) – STA 40+00 TO 52+00	100 OF 126
L-5	PLANTING PLAN (C-LINE) – STA 52+00 TO 61+50	101 OF 126
L-6	PLANTING PLAN (C-LINE) – STA 61+50 TO 69+00	102 OF 126
L-7	PLANTING PLAN (C-LINE) – STA 69+00 TO 77+66	103 OF 126
L-8	PLANTING NOTES AND PROGRAM	104 OF 126
L-9	PLANTING DETAILS	105 OF 126
L-10	TREE DEMOLITION PLAN (C-LINE) – STA 1+50 TO 19+50	106 OF 126
L-11	TREE DEMOLITION PLAN (C-LINE) – STA 19+50 TO 29+50	107 OF 126
L-12	TREE DEMOLITION PLAN (C-LINE) – STA 29+50 TO 40+00	108 OF 126
L-13	TREE DEMOLITION PLAN (C-LINE) – STA 40+00 TO 52+00	109 OF 126
L-14	TREE DEMOLITION PLAN (C-LINE) – STA 52+00 TO 61+50	110 OF 126
L-15	TREE DEMOLITION PLAN (C-LINE) – STA 61+50 TO 69+00	111 OF 126
L-16	TREE DEMOLITION PLAN (C-LINE) – STA 69+00 TO 77+66	112 OF 126
L-17	TREE DEMOLITION PLAN INSET AND TABLE	113 OF 126
L-18	TREE DEMOLITION TABLE	114 OF 126
L-19	TREE DEMOLITION TABLE	115 OF 126
L-20	IRRIGATION NOTES AND LEGEND	116 OF 126
L-21	CITY STANDARD IRRIGATION DETAILS/IRRIGATION CROSSING DETAILS	117 OF 126
L-22	IRRIGATION DETAILS	118 OF 126
L-23	IRRIGATION PLAN (C-LINE) – STA 1+50 TO 19+50	119 OF 126
L-24	IRRIGATION PLAN (C-LINE) – STA 19+50 TO 28+90	120 OF 126
L-25	IRRIGATION PLAN (C-LINE) – STA 28+90 TO 40+00	121 OF 126
L-26	IRRIGATION PLAN (C-LINE) – STA 40+00 TO 52+00	122 OF 126
L-27	IRRIGATION PLAN (C-LINE) – STA 52+00 TO 61+50	123 OF 126
L-28	IRRIGATION PLAN (C-LINE) – STA 61+50 TO 69+00	124 OF 126
L-29	IRRIGATION PLAN (C-LINE) – STA 69+00 TO 77+66	125 OF 126
	DOCUMENTS	
D-1	CITY OF PALO ALTO LAND USE ACTION	126 OF 126

REV	DESCRIPTION	DATE	APPR.

HDR

DATE JULY 2015
DESIGN L. JONES
DRAWN H. SUAREZ
CHECKED P. HRADILEK

ENGINEERING CERTIFICATION
REGISTERED PROFESSIONAL ENGINEER LANCE M. JONES 68574 EXP. 12/31/17 CIVIL STATE OF CALIFORNIA
PROJECT ENGINEER DATE

SAN FRANCISQUITO CREEK JOINT POWERS AUTHORITY
ACCEPTED BY DISTRICT
PROJECT ENGINEER DATE

PROJECT NAME AND SHEET DESCRIPTION:
SAN FRANCISQUITO CREEK FLOOD REDUCTION, ECOSYSTEM RESTORATION, & RECREATION PROJECT
DRAWING INDEX

SCALE NA
VERIFY SCALES 0 1"
BAR IS ONE INCH ON ORIGINAL DRAWING IF NOT ONE INCH ON THIS SHEET, ADJUST SCALES ACCORDINGLY

PROJECT NUMBER 26284002
SHEET CODE: G-2
SHEET NUMBER: 2 OF 126

DOCUMENT NUMBER: SFC_LP-G-1028-XXXXXXX

USERNAME: BillShad Tue 08 Jul 2008 09:32am
FILENAME: C:\pwworking\sec\d0171341\G-02

GENERAL SITE PLAN

SCALE: 1"=200'

KEY NOTE:

1. CONTRACTOR TO INSTALL PROJECT SIGNS PROVIDED BY SCVWD.

USERNAME: BillShad Tue 08 Jul 2008 09:32am
FILENAME: C:\pwworking\sac\d0171341\G-03

DOCUMENT NUMBER: SFC_LP-G-1028-XXXXXXX

REV	DESCRIPTION	DATE	APPR.

HDR

DATE: JULY 2015
DESIGN: L. JONES
DRAWN: H. SUAREZ
CHECKED: P. HRADILEK

ENGINEERING CERTIFICATION

REGISTERED PROFESSIONAL ENGINEER — LANCE M. JONES — 06574 — EXP. 6/30/09 — CIVIL — STATE OF CALIFORNIA

PROJECT ENGINEER DATE

SAN FRANCISQUITO CREEK JOINT POWERS AUTHORITY

ACCEPTED BY DISTRICT

PROJECT ENGINEER DATE

PROJECT NAME AND SHEET DESCRIPTION:

SAN FRANCISQUITO CREEK FLOOD REDUCTION, ECOSYSTEM RESTORATION, & RECREATION PROJECT

GENERAL SITE PLAN

SCALE: 1" = 200'

VERIFY SCALES: 0 — 1"
BAR IS ONE INCH ON ORIGINAL DRAWING IF NOT ONE INCH ON THIS SHEET, ADJUST SCALES ACCORDINGLY

PROJECT NUMBER: 26284002

SHEET CODE: G-3

SHEET NUMBER: 3 OF 126

ABBREVIATIONS

AB – AGGREGATE BASE
ABUT – ABUTMENT
AC – ASPHALT CONCRETE
ACP – ASPHALT CONCRETE PIPE
AISI – AMERICAN IRON & STEEL INSTITUTE
ALIGN – ALIGNMENT
ANSI – AMERICAN NATIONAL STANDARDS INSTITUTE
APPROX – APPROXIMATE
ARV – AIR RELEASE VALVE
ASTM – AMERICAN SOCIETY FOR TESTING MATERIALS
AWWA – AMERICAN WATER WORKS ASSOCIATION

BB – BEGINNING OF BRIDGE
BRG – BEARING
BC – BEGIN CURVE
BM – BENCH MARK
BVCE – BEGIN VERTICAL CURVE ELEVATION
BVCS – BEGIN VERTICAL CURVE STATION

C – CENTER
℄ – CENTERLINE
CB – CATCH BASIN (INLET)
CFS – CUBIC FEET PER SECOND
CI – CAST IRON
CIDH – CAST–IN–DRILLED–HOLE
CIP – CAST–IN–PLACE,
– CAST IRON PIPE
CIPP – CAST–IN–PLACE PIPE
CL – CLEARANCE
CLR – CLEAR
CMP – CORRUGATED METAL PIPE
CO – CLEAN OUT
CONC – CONCRETE
CONT – CONTINUOUS
CP – CEMENT PIPE
CSP – CORRUGATED STEEL PIPE
CTP – CABLE TELEVISION POLE
CTV – CABLE TV
CU FT – CUBIC FEET

DESC – DESCRIPTION
DG – DECOMPOSED GRANITE
DH – DRILL HOLES
DI – DRAIN INLET
DIA – DIAMETER
DIAPH – DIAPHRAGM
DICL – DUCTILE IRON CEMENT LINED
DIP – DUCTILE IRON PIPE
DL – DAYLIGHT
D/S – DOWNSTREAM
DWR – DEPARTMENT OF WATER RESOURCES

(E) – EXISTING
E – EAST
EB – END OF BRIDGE
EC – END CURVE
ELEC – ELECTRICAL
ELEV/EL – ELEVATION
EP – EDGE OF PAVEMENT
EPA – EAST PALO ALTO
EPASD – EAST PALO ALTO SANITARY DISTRICT
EPDM – ETHYLENE PROPYLENE DIENE MONOMER
ETC – ETCETERA
EVCE – END VERTICAL CURVE ELEVATION
EVCS – END VERTICAL CURVE STATION

FCA – FLOOD CONTROL AMERICA
FG – FINISHED GRADE
FH – FIRE HYDRANT
FT – FEET
FTG – FOOTING

GALV – GALVANIZED
GB – GRADE BREAK
GLULAM – GLUE LAMINATED TIMBER

HORIZ – HORIZONTAL
HT – HEIGHT

ID – INSIDE DIAMETER
IF – INSIDE FACE
IN – INCH
INV – INVERT
IP – IRON PIPE

JT – JOINT TRENCH

K – RATE OF VERTICAL CURVE
KV – KILO VOLT

L – LEFT
LF – LINEAR FEET
LG – LONG
LT – LEFT
LVC – LENGTH OF VERTICAL CURVE
LOL – LAYOUT LINE

MAINT – MAINTENANCE
MAX – MAXIMUM
MH – MANHOLE
MHHW – MEAN HIGHER HIGH WATER
MIN – MINIMUM
MON – MONUMENT
MW – MONITORING WELL

N – NORTH
N/A – NOT APPLICABLE
NAVD – NORTH AMERICAN VERTICAL DATUM
NE – NORTHEAST
NO – NUMBER
NTS – NOT TO SCALE
NUM – NUMBER
NW – NORTHWEST

O&M – OPERATION & MAINTENANCE
OC – ON CENTER
OD – OUTSIDE DIAMETER
OG – ORIGINAL GROUND
OHE – OVERHEAD ELECTRIC

PA – PALO ALTO
PCC – PORTLAND CEMENT CONCRETE/
POINT OF COMPOUND CURVATURE
P.E. – PROFESSIONAL ENGINEER
PED – PEDESTRIAN
PG&E – PACIFIC GAS AND ELECTRIC
PI – POINT OF INTERSECTION
PK – PARKER–KALON SURVEY NAIL
POT – POINT ON TANGENT
PP – POWER POLE
PRC – POINT OF REVERSE CURVE
PSI – POUND PER SQUARE INCH
PT – PRESSURE TREATED
PUE – PUBLIC UTILITY EASEMENT
PVC – POLYVINYL CHLORIDE
PVMT – PAVEMENT
PW – PUMPING WELL

Q_{100} – 100 YEAR FREQUENCY FLOW

R – RADIUS, RIGHT
RD – ROAD
RCB – REINFORCED CONCRETE BOX
RCP – REINFORCED CONCRETE PIPE
REBAR – REINFORCING BAR
REINF – REINFORCED
REQ'D – REQUIRED
RR – RAILROAD
RSP – ROCK SLOPE PROTECTION
RT – RIGHT
R/W – RIGHT OF WAY

S – SLOPE,
– SOUTH
SCHED – SCHEDULE
SCVWD – SANTA CLARA VALLEY WATER DISTRICT
SD – STORM DRAIN
SE – SOUTHEAST
SFC – SAN FRANCISQUITO CREEK
SHT – SHEET
SJMW – SAN JOSE MUNICIPAL WATER
SJWC – SAN JOSE WATER COMPANY
SPECS – SPECIFICATIONS
SPRR – SOUTHERN PACIFIC RAILROAD
SQ – SQUARE
SS – SANITARY SEWER
SSTL – STAINLESS STEEL
ST – STREET
STA – STATION
STD – STANDARD
STL – STEEL
STRD – STRANDED
SW – SOUTHWEST
SWPPP – STORM WATER POLLUTION PREVENTION PLAN
SYM – SYMMETRICAL
SST – STAINLESS STEEL

T – TELEPHONE
t – THICKNESS OF PLATE OR DIMENSION OF WELD
TBM – TEMPORARY BENCH MARK
TCA – TEMPORARY CONSTRUCTION AREA
TCE – TEMPORARY CONSTRUCTION EASEMENT
TEL – TELEPHONE
TIP EL – ELEVATION AT THE BOTTOM OF THE SHEET PILE FLOODWALL
TOB – TOP OF BANK
TOL – TOP OF LEVEE
TOT – TOTAL
TP – TEST PIT LOCATION
TRANS – TRANSFORM
TRM – TURF REINFORCEMENT MAT
TS – TRAFFIC SIGNAL
TYP – TYPICAL

UG – UNDERGROUND
UPRR – UNION PACIFIC RAILROAD
U/S – UPSTREAM
USGS – UNITED STATES GEOLOGICAL SURVEY

V – VOLTAGE
VCP – VITRIFIED CLAY PIPE
VERT – VERTICAL

W – WATER,
– WEST
WM – WIRE MESH
WP – WORK POINT
WSE – WATER SURFACE ELEVATION
WSP – WELDED STEEL PIPE
WSCL – WRAPPED STEEL CEMENT LINED
WV – WATER VALVE
WW – WINGWALL
WWF – WELDED WIRE FABRIC
W/ – WITH

& – AND
@ – AT
℄ – CENTERLINE
Ø – DIAMETER
℘ – PROPERTY LINE

DETAIL AND SECTION DESIGNATION

* IF SECTION OR DETAIL APPEARS ON THE SAME DRAWING AS THE CALLOUT, THE DRAWING REFERENCE IS REPLACED WITH A DASH (–)

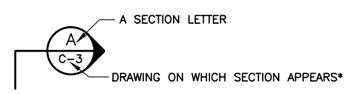

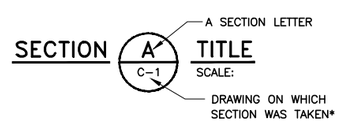

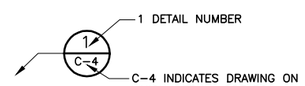

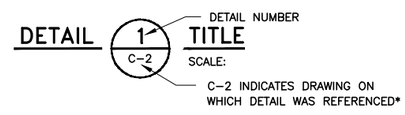

EXISTING LINE TYPE LEGEND

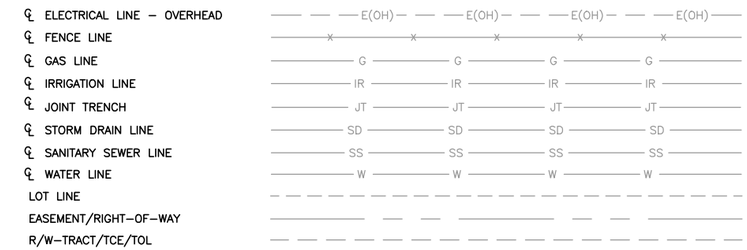

PROPOSED LINE TYPE LEGEND

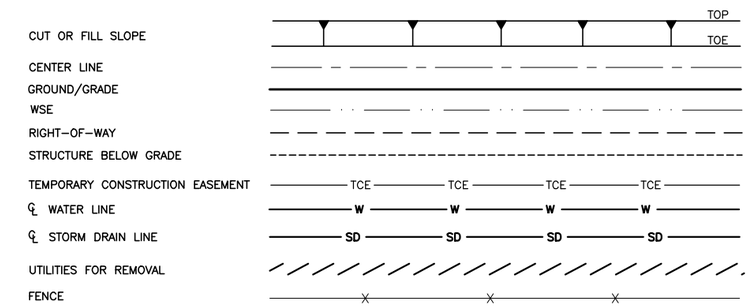

SURVEY

237 SURVEY CONTROL POINT
SETTLEMENT PLATE

TRAFFIC CONTROL

STAGING AREA ACCESS ROAD
PROJECT SIGN

MISCELLANEOUS

WATER SURFACE
ELECTROLIER
GUY WIRE
STORM DRAIN OUTFALL

SYMBOLS LEGEND

KEY NOTE
UTILITY POLE
STORM DRAIN MANHOLE
CATCH BASIN / SD INLET
SANITARY MANHOLE
TREE
ELECTRICAL TOWER
FLOW DIRECTION
FIRE HYDRANT
FOLDABLE BOLLARD
VALVE
ROOT WAD

SECTION MATERIALS

ROCK SLOPE PROTECTION
STEEL
LIMITS OF NEW LEVEE FILL
AGGREGATE BASE
LIMITS OF NEW ACCESS ROAD FILL
NEW UTILITY TRENCH FINAL BACKFILL
LIMITS OF EXCAVATION OF EXISTING LEVEE
NEW UTILITY TRENCH INITIAL BACKFILL
LIMITS OF EXCAVATION OF RUBBLE MOUND
STAGING/STOCKPILING AREA
PCC PAVEMENT
AC PAVEMENT
(E) MITIGATION AREA
TURF REINFORCEMENT MAT

GENERAL NOTES

1. ALL EXISTING FACILITIES, STRUCTURES, TREES, FENCES, LANDSCAPING, ETC., DESIGNATED "EXIST". OR SHOWN EXISTING (DASHED LINES) ARE TO REMAIN. ONLY THOSE SPECIFICALLY DESIGNATED FOR REMOVAL AS SHOWN ON THE DRAWINGS, OR AS DIRECTED BY THE ENGINEER SHALL BE REMOVED.
2. ALL REFERENCES MADE TO RIGHT OR LEFT AND ALL CROSS–SECTIONS SHOWN ON THE PLANS ARE VIEWED LOOKING UPSTREAM.
3. DATE OF PHOTOGRAPHY: MARCH 4, 2010
   HORIZONTAL DATUM:
   CALIFORNIA COORDINATE SYSTEM, ZONE 3
   NORTH AMERICAN DATUM OF 1983
   (NAD83, NSR 2007)
   VERTICAL DATUM:
   NORTH AMERICAN VERTICAL
   DATUM OF 1988 (NAVD88)
   PROJECT CONVERSION: EL. 0.0 NAVD 88=EL. –2.75 NAVD 29
   GROUND CONTROL SURVEY BY: TOWILL, INC.

REV	DESCRIPTION	DATE	APPR.

HDR

DATE: JULY 2015
DESIGN: L. JONES
DRAWN: H. SUAREZ
CHECKED: P. HRADILEK

ENGINEERING CERTIFICATION
REGISTERED PROFESSIONAL ENGINEER LANCE M. JONES C 68574 Exp. 6/30/17 CIVIL STATE OF CALIFORNIA
PROJECT ENGINEER DATE

SAN FRANCISQUITO CREEK JOINT POWERS AUTHORITY
ACCEPTED BY DISTRICT
PROJECT ENGINEER DATE

PROJECT NAME AND SHEET DESCRIPTION:
SAN FRANCISQUITO CREEK FLOOD REDUCTION, ECOSYSTEM RESTORATION, & RECREATION PROJECT
ABBREVIATIONS, LEGEND AND GENERAL NOTES

SCALE: NOT TO SCALE
VERIFY SCALES 0 1"
BAR IS ONE INCH ON ORIGINAL DRAWING IF NOT ONE INCH ON THIS SHEET, ADJUST SCALES ACCORDINGLY

PROJECT NUMBER: 26284002
SHEET CODE: G–4
SHEET NUMBER: 4 OF 126

DOCUMENT NUMBER: SFC_LP–G–1028–XXXXXXX

USERNAME: BillShad Tue 08 Jul 2008 09:32am
FILENAME: C:\pwworking\sec\d0171341\G–04

WATER

City of Palo Alto Water
Bryan Hagins - (650) 496-6907 - bryan.hagins@cityofpaloalto.org

American Water Company
Gopi Nathan - (650) 924-3374 - GNathan@amwater.com

LOCAL AGENCY CONTACTS

City of Palo Alto
Baylands Athletic Center - Daren Anderson - (650) 496-6950 - darren.anderson@cityofpaloalto.org
Palo Alto Airport Terminal - Jim Wadleigh - (650) 329-2687 - james.wadleigh@cityofpaloalto.org
Public Works Department - Joe Teresi - (650) 329-2129 - joe.teresi@cityofpaloalto.org
Palo Alto Electric - Scott Williams - (650) 496-6936 - scott.williams@cityofpaloalto.org
Palo Alto Municipal Golf Course Maintenance - Brian Daum - (310) 346-0417
Palo Alto Open Space - Richard Bicknell - (650) 617-3156 - richard.bicknell@cityofpaloalto.org

City of East Palo Alto
Public Works Department
Kamal Fallaha - (650) 853-3189 - kfallaha@cityofepa.org
1960 Tate Street, East Palo Alto, CA 94303

San Mateo County
Public Works Department
Ann Stillman - (650) 599-1497 - astillman@smcgov.org
555 County Center, Redwood City, CA 94063

TELECOMMUNICATION

Comcast
Derek - (650) 551-7366
901 Weeks Street, East Palo Alto, CA 94303

SEWER

West Bay Sanitary District
Bob Scheidt - (650) 321-0384 - bscheidt@westbaysanitary.org
500 Laurel Street, Menlo Park, CA 94025

East Palo Alto Sanitary District
Rich Laureta - (650) 208-2951 - laureta@freyerlaureta.com
901 Weeks Street, East Palo Alto, CA 94303

City of Palo Alto Sewer
Frank Alvarado - (650) 496-6917 - frank.alvarado@cityofpaloalto.org

GAS

Pacific Gas and Electric (PG&E)
Christian Roa - (925) 357-7529 - C2RF@pge.com
Barry Sheppard - (415) 320-2246 - B2SZ@pge.com

City of Palo Alto Gas
Todd Carlsen - (650) 496-6960 - todd.carlsen@cityofpaloalto.org

ELECTRIC

Pacific Gas and Electric (PG&E)
Deborah Vaccaro - (408) 365-2045
6403 Santa Teresa Blvd, San Jose, CA 95119-1203

Pacific Gas and Electric (PG&E)
Nick Mandoza - (650) 592-9268
275 Industrial Way, San Carlos, CA 94070

City of Palo Alto
Scott Williams - (650) 496-6936 - scott.williams@cityofpaloalto.org

UNDERGROUND SERVICE ALERT
USA - 811

GENERAL NOTES

1. THE CONTRACTOR SHALL COORDINATE WORK WITH PACIFIC GAS AND ELECTRIC, EAST PALO ALTO SANITARY DISTRICT (EPASD), SAN MATEO COUNTY PUBLIC WORKS, THE CITY OF PALO ALTO, THE AMERICAN WATER COMPANY, AND THE CITY OF EAST PALO ALTO PUBLIC WORKS DEPARTMENT WHEN WORKING NEAR POWER POLES/LINES, OR ANY OTHER UTILITY STRUCTURES, BOXES, ETC. WORK WILL COMPLY WITH THE BAY AREA QUALITY MANAGEMENT DISTRICT REQUIREMENTS FOR AIRBORNE PARTICULATES AND DUST.
2. THE CONTRACTOR SHALL BE SOLELY AND COMPLETELY RESPONSIBLE FOR FURNISHING AND MAINTAINING ALL WARNING SIGNS, DEVICES, AND FEATURES NECESSARY TO PROTECT THE HEALTH AND SAFETY OF THE GENERAL PUBLIC AND WORKERS AND TO PROVIDE FOR THE PROPER AND SAFE ROUTING OF VEHICULAR AND PEDESTRIAN TRAFFIC DURING THE PERFORMANCE OF THE WORK.
3. THE CONTRACTOR SHALL BE RESPONSIBLE FOR COMPLIANCE WITH ALL APPLICABLE FEDERAL, STATE AND LOCAL LAWS, RULES AND REGULATIONS APPLICABLE TO ALL WORK PERFORMED UNDER THE CONTRACT.
4. CONTRACTOR SHALL PROVIDE AND IMPLEMENT A STORM WATER POLLUTION PREVENTION PLAN (SWPPP) IN ACCORDANCE WITH THE SPECIFICATIONS AND PERMITS.
5. THE CONTRACTOR SHALL VERIFY ALL DIMENSIONS, SIZES, AND LOCATIONS OF ALL EXISTING FACILITIES AND FEATURES BEFORE STARTING WORK AND SHALL IMMEDIATELY NOTIFY THE ENGINEER OF ANY DISCREPANCIES.
6. UTILITY INFORMATION WAS COMPILED FROM DATA PROVIDED BY THE UTILITY OWNERS AND LOCATIONS ARE APPROXIMATE. THE ACTUAL LOCATIONS AND ELEVATIONS OF THE EXISTING UTILITIES SHALL BE VERIFIED BY THE CONTRACTOR. ALL EXISTING UNDERGROUND AND OVERHEAD UTILITIES SHALL BE PROTECTED FROM CONSTRUCTION EQUIPMENT AND OPERATIONS, UNLESS OTHERWISE NOTED.
7. THE CONTRACTOR IS HEREBY NOTIFIED THAT, PRIOR TO COMMENCING CONSTRUCTION, THE CONTRACTOR IS RESPONSIBLE FOR CONTACTING ALL UTILITY COMPANIES WHO ARE INVOLVED WITH THIS PROJECT. IN ADDITION, THE CONTRACTOR IS TO REQUEST TO HAVE ALL UNDERGROUND UTILITIES, THAT MAY POSSIBLY CONFLICT WITH THE ABOVE OR BELOW GROUND IMPROVEMENTS, LOCATED IN THE FIELD. THE CONTRACTOR AND ANY SUBCONTRACTOR, IS REQUIRED TO NOTIFY THE UNDERGROUND SERVICE ALERT 48 HOURS IN ADVANCE OF PERFORMING ANY EXCAVATION BY CALLING 1-800-227-2600.
8. THE CONTRACTOR IS RESPONSIBLE FOR THE PROTECTION OF ALL EXISTING MONUMENTS AND OTHER SURVEY MARKERS. MONUMENTS AND SURVEY MARKERS REMOVED OR DESTROYED DURING CONSTRUCTION SHALL BE REPLACED BY A LICENSED LAND SURVEYOR AT THE CONTRACTOR'S EXPENSE. CONTRACTOR SHALL PROVIDE AGENCY SURVEYORS WITH AT LEAST 48 HOURS ADVANCE NOTICE PRIOR TO REPLACEMENT OF MONUMENT AND/OR SURVEY MARKER.
9. THE CONTRACTOR SHALL BE RESPONSIBLE FOR MAINTAINING RECORD DRAWINGS FOR ALL WORK THROUGHOUT THE COURSE OF CONSTRUCTION. SUCH DRAWINGS SHALL RECORD THE LOCATION AND AS-BUILT CONDITION OF ALL PROJECT ELEMENTS. COPIES SHALL BE DELIVERED TO THE DISTRICT ENGINEER PRIOR TO THE ACCEPTANCE OF THE WORK AS INDICATED IN THE SPECIFICATIONS.
10. DRAWINGS SHOWN WITH AERIAL PHOTOS ARE PROVIDED FOR REFERENCE ONLY. ALL FACILITIES MAY NOT BE SHOWN ON PHOTOS. CONTRACTORS SHALL SATISFY THEMSELVES AS TO THE LOCATION OF EXISTING FACILITIES THAT MAY BE AFFECTED BY CONSTRUCTION.
11. EXISTING FENCING AND GATES WITHIN THE RIGHT-OF-WAY SHALL BE REMOVED AS REQUIRED FOR CONSTRUCTION AND AS SPECIFIED ON THE DRAWINGS. SALVAGE OF FENCING ITEMS SHALL BE IN ACCORDANCE WITH THE SPECIFICATIONS. WHERE EXISTING FENCING OR BARRIERS ARE REMOVED, TEMPORARY BARRIERS SHALL BE PROVIDED. FENCING, GATES, AND SIGNS SHALL BE REPLACED FOLLOWING CONSTRUCTION.
12. ALL FENCING OR GATES TO BE LOCATED ON A PROPERTY LINE SHALL BE LOCATED BY CONTRACTOR'S QUALIFIED LICENSED LAND SURVEYOR OR REGISTERED CIVIL ENGINEER QUALIFIED TO PERFORM LAND SURVEYING WORK.
13. CONTRACTOR SHALL PROVIDE DUST CONTROL AND STREET CLEANING MEASURES AT ALL TIMES.
14. ADMINISTRATION OF ALL WORK PERFORMED BY THE CONTRACTOR SHALL COMPLY WITH THE GENERAL SPECIFICATIONS.
15. THE CONTRACTOR SHALL COORDINATE CONSTRUCTION ACTIVITIES TO MINIMIZE DISRUPTION TO THE PALO ALTO STORM WATER PUMPING STATION AND THE O'CONNOR STORM WATER PUMPING STATION. THE CONTRACTOR SHALL COORDINATE OPERATIONS PER THE PROJECT'S STORM WATER POLLUTION PREVENTION PLAN.
16. THE PROJECT SHALL COMPLY WITH ALL DEFINED MITIGATION MEASURES OUTLINED IN THE PROJECT'S EIR.

BASIS OF DESIGN

1. DESIGN CRITERIA INFORMATION USED FOR THIS DRAWING SET IS DOCUMENTED BY HDR, INC. IN THE FOLLOWING DOCUMENT:

   DESIGN CRITERIA AND CONSIDERATIONS TECHNICAL MEMORANDUM, SAN FRANCISQUITO CREEK FLOOD PROTECTION CAPITAL PROJECT, HDR ENGINEERING, INC., JANUARY 2014.
2. THE GEOTECHNICAL INFORMATION USED FOR THIS DRAWING SET WAS PROVIDED BY GEI CONSULTANTS IN THE FOLLOWING DOCUMENT:

   SAN FRANCISQUITO CREEK FLOOD PROTECTION PROJECT, GEOTECHNICAL EVALUATION REPORT, MAY 2012, PROJECT NO. 092850.
3. THE PERFORMANCE OF LEVEE SYSTEMS IS DEPENDENT UPON BOTH THE DESIGN CRITERIA AND THE LONG TERM OPERATION AND MAINTENANCE OF THE LEVEES. HDR HAS PREPARED THESE PLANS AND ASSOCIATED SPECIFICATIONS IN ACCORDANCE WITH FEDERAL, STATE, AND USACE GUIDELINES USING INFORMATION FROM MULTIPLE SOURCES, INCLUDING OTHER DESIGN CONSULTANTS. IF EXTREME FLOODS (EXCEEDING THE DESIGN PROFILE), EXTREME EARTHQUAKES (EXCEEDING THE DESIGN PROFILE), OR OTHER LOADING CONDITIONS NOT EVALUATED IN THE DESIGN OCCUR, THE INTEGRITY OF THE LEVEE SYSTEM MAY BE COMPROMISED.
4. DISCHARGE CRITERIA:
   A. Q_{100} = 9,400 CFS AT O'CONNOR PUMPING STATION.
   B. Q_{100} = 9,300 CFS AT HIGHWAY 101.

REV	DESCRIPTION	DATE	APPR.

HDR

DATE	JULY 2015
DESIGN	L. JONES
DRAWN	H. SUAREZ
CHECKED	P. HRADILEK

ENGINEERING CERTIFICATION
REGISTERED PROFESSIONAL ENGINEER LANCE M. JONES 08574 EXP. 6/30/17 CIVIL STATE OF CALIFORNIA
PROJECT ENGINEER DATE

SAN FRANCISQUITO CREEK JOINT POWERS AUTHORITY
ACCEPTED BY DISTRICT
PROJECT ENGINEER DATE

PROJECT NAME AND SHEET DESCRIPTION:
SAN FRANCISQUITO CREEK FLOOD REDUCTION, ECOSYSTEM RESTORATION, & RECREATION PROJECT
UTILITY AND LOCAL AGENCY CONTACTS, GENERAL NOTES AND BASIS OF DESIGN

SCALE: N/A
VERIFY SCALES: 0 1" BAR IS ONE INCH ON ORIGINAL DRAWING IF NOT ONE INCH ON THIS SHEET, ADJUST SCALES ACCORDINGLY
PROJECT NUMBER: 26284002
SHEET CODE: G-5
SHEET NUMBER: 5 OF 126

DOCUMENT NUMBER: SFC_LP-G-1028-XXXXXXX

USERNAME: BillShad Tue 08 Jul 2008 09:32am
FILENAME: C:\pwworking\sac\d0171341\G-05

POLLUTION PREVENTION — IT'S PART OF THE PLAN

Construction projects are required to implement year-round stormwater BMPs, as they apply to your project.

Runoff from streets and other paved areas is a major source of pollution to San Francisco Bay. Construction activities can directly affect the health of the Bay unless contractors and crews plan ahead to keep construction dirt, debris, and other pollutants out of storm drains and local creeks. Following these guidelines will ensure your compliance with City of Palo Alto Ordinance requirements.

MATERIALS & WASTE MANAGEMENT

Non-Hazardous Materials

- ☐ Berm and cover stockpiles of sand, dirt or other construction material with tarps when rain is forecast or when they are not in use.
- ☐ Use (but don't overuse) reclaimed water for dust control.
- ☐ Ensure dust control water doesn't leave site or discharge to storm drains.

Hazardous Materials

- ☐ Label all hazardous materials and hazardous wastes (such as pesticides, paints, thinners, solvents, fuel, oil, and antifreeze) in accordance with city, county, state and federal regulations.
- ☐ Store hazardous materials and wastes in water tight containers, store in appropriate secondary containment, and cover them at the end of every work day or during wet weather or when rain is forecast.
- ☐ Follow manufacturer's application instructions for hazardous materials and do not use more than necessary. Do not apply chemicals outdoors when rain is forecast within 24 hours.
- ☐ Arrange for appropriate disposal of all hazardous wastes.

Waste Management

- ☐ Cover and maintain dumpsters. Check frequently for leaks. Place dumpsters under roofs or cover with tarps or plastic sheeting secured around the outside of the dumpster. A plastic liner is recommended to prevent leaks. Never clean out a dumpster by hosing it down on the construction site.
- ☐ Place portable toilets away from storm drains. Make sure they are in good working order. Check frequently for leaks.
- ☐ Dispose of all wastes and demolition debris properly. Recycle materials and wastes that can be recycled, including solvents, water-based paints, vehicle fluids, broken asphalt and concrete, wood, and cleared vegetation.
- ☐ Dispose of liquid residues from paints, thinners, solvents, glues, and cleaning fluids as hazardous waste.
- ☐ Keep site clear of litter (e.g. lunch items, cigarette butts).
- ☐ Prevent litter from uncovered loads by covering loads that are being transported to and from site.

Construction Entrances and Perimeter

- ☐ Establish and maintain effective perimeter controls and stabilize all construction entrances and exits to sufficiently control erosion and sediment discharges from site and tracking off site.
- ☐ Sweep or vacuum any street tracking immediately and secure sediment source to prevent further tracking. Never hose down streets to clean up tracking.

EQUIPMENT MANAGEMENT & SPILL CONTROL

Maintenance and Parking

- ☐ Designate an area of the construction site, well away from streams or storm drain inlets and fitted with appropriate BMPs, for auto and equipment parking, and storage.
- ☐ Perform major maintenance, repair jobs, and vehicle and equipment washing off site.
- ☐ If refueling or vehicle maintenance must be done onsite, work in a bermed area away from storm drains and over a drip pan or drop cloths big enough to collect fluids. Recycle or dispose of fluids as hazardous waste.
- ☐ If vehicle or equipment cleaning must be done onsite, clean with water only in a bermed area that will not allow rinse water to run into gutters, streets, storm drains, or surface waters.
- ☐ Do not clean vehicle or equipment onsite using soaps, solvents, degreasers, or steam cleaning equipment, and do not use diesel oil to lubricate equipment or parts onsite.

Spill Prevention and Control

- ☐ Keep spill cleanup materials (e.g., rags, absorbents and cat litter) available at the construction site at all times.
- ☐ Maintain all vehicles and heavy equipment. Inspect frequently for and repair leaks. Use drip pans to catch leaks until repairs are made.
- ☐ Clean up leaks, drips and other spills immediately and dispose of cleanup materials properly.
- ☐ Use dry cleanup methods whenever possible (absorbent materials, cat litter and/or rags).
- ☐ Sweep up spilled dry materials immediately. Never attempt to "wash them away" with water, or bury them.
- ☐ Clean up spills on dirt areas by digging up and properly disposing of contaminated soil.
- ☐ Report any hazardous materials spills immediately! Call City of Palo Alto Communications, **(650) 329-2413**. If the spill poses a significant hazard to human health and safety, property or the environment, you must report it to the State Office of Emergency Services. **(800) 852-7550 (24 hours).**

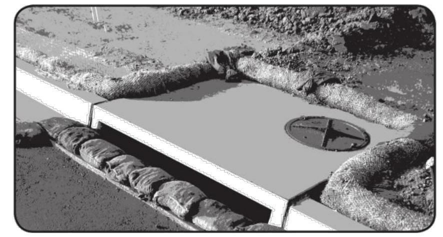

EARTHMOVING

Grading and Earthwork

- ☐ Schedule grading and excavation work during dry weather.
- ☐ Stabilize all denuded areas, install and maintain temporary erosion controls (such as erosion control fabric or bonded fiber matrix) until vegetation is established.
- ☐ Remove existing vegetation only when absolutely necessary, plant temporary vegetation for erosion control on slopes or where construction is not immediately planned.
- ☐ Prevent sediment from migrating offsite and protect storm drain inlets, drainage courses and streams by installing and maintaining appropriate BMPs (e.g., silt fences, gravel bags, fiber rolls, temporary swales, etc.).
- ☐ Keep excavated soil on site and transfer it to dump trucks on site, not in the streets.

Contaminated Soils

- ☐ If any of the following conditions are observed, test for contamination and contact the Regional Water Quality Control Board:
  - Unusual soil conditions, discoloration, or odor.
  - Abandoned underground tanks.
  - Abandoned wells.
  - Buried barrels, debris, or trash.
- ☐ If the above conditions are observed, document any signs of potential contamination and clearly mark them so they are not distrurbed by construction activities.

Landscaping

- ☐ Protect stockpiled landscaping materials from wind and rain by storing them under tarps all year-round.
- ☐ Stack bagged material on pallets and under cover.
- ☐ Discontinue application of any erodible landscape material within 2 days before a forecast rain event or during wet weather.

CONCRETE MANAGEMENT & DEWATERING

Concrete Management

- ☐ Store both dry and wet materials under cover, protected from rainfall and runoff and away from storm drains or waterways. Store materials off the ground, on pallets. Protect dry materials from wind.
- ☐ Wash down exposed aggregate concrete only when the wash water can (1) flow onto a dirt area; (2) drain onto a bermed surface from which it can be pumped and disposed of properly; or (3) block any storm drain inlets and vacuum washwater from the gutter. If possible, sweep first.
- ☐ Wash out concrete equipment/trucks offsite or in a designated washout area, where the water will fl ow into a temporary waste pit, and make sure wash water does not leach into the underlying soil. (See CASQA Construction BMP Handbook for properly designed concrete washouts.)

Dewatering

- ☐ Reuse water for dust control, irrigation or another on-site purpose to the greatest extent possible.
- ☐ Be sure to obtain a Permit for Construction in the Public Street from Public Works Engineering before discharging water to a street, gutter, or storm drain. Call the Regional Water Quality Control Plant (RWQCP) at **(650) 329-2598** for an inspection prior to commencing discharge. Use filtration or diversion through a basin, tank, or sediment trap as required by the approved dewatering plan. Dewatering is not permitted from October to April.
- ☐ In areas of known contamination, testing is required prior to reuse or discharge of groundwater. Consult with the City inspector to determine what testing to do and to interpret results. Contaminated groundwater must be treated or hauled off-site for proper disposal.

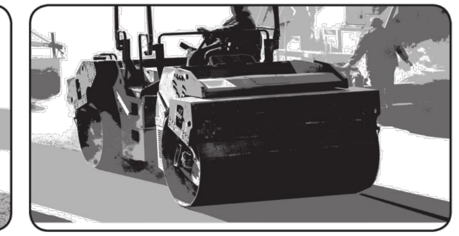

PAVING/ASPHALT WORK

Paving

- ☐ Avoid paving and seal coating in wet weather or when rain is forecast, to prevent materials that have not cured from contacting stormwater runoff.
- ☐ Cover storm drain inlets and manholes when applying seal coat, slurry seal, fog seal, or similar materials.
- ☐ Collect and recycle or appropriately dispose of excess abrasive gravel or sand. Do NOT sweep or wash it into gutters.

Sawcutting & Asphalt/Concrete Removal

- ☐ Protect storm drain inlets during saw cutting.
- ☐ If saw cut slurry enters a catch basin, clean it up immediately.
- ☐ Shovel or vacuum saw cut slurry deposits and remove from the site. When making saw cuts, use as little water as possible. Sweep up, and properly dispose of all residues.

PAINTING & PAINT REMOVAL

Painting Cleanup and Removal

- ☐ Never clean brushes or rinse paint containers into a street, gutter, storm drain, or stream.
- ☐ For water-based paints, paint out brushes to the extent possible, and rinse into a drain that goes to the sanitary sewer. Never pour paint down a storm drain.
- ☐ For oil-based paints, paint out brushes to the extent possible and clean with thinner or solvent in a proper container. Filter and reuse thinners and solvents. Dispose of excess liquids as hazardous waste.
- ☐ Sweep up or collect paint chips and dust from non-hazardous dry stripping and sand blasting into plastic drop cloths and dispose of as trash.
- ☐ Chemical paint stripping residue and chips and dust from marine paints or paints containing lead, mercury, or tributyltin must be disposed of as hazardous waste. Lead based paint removal requires a state certified contractor.

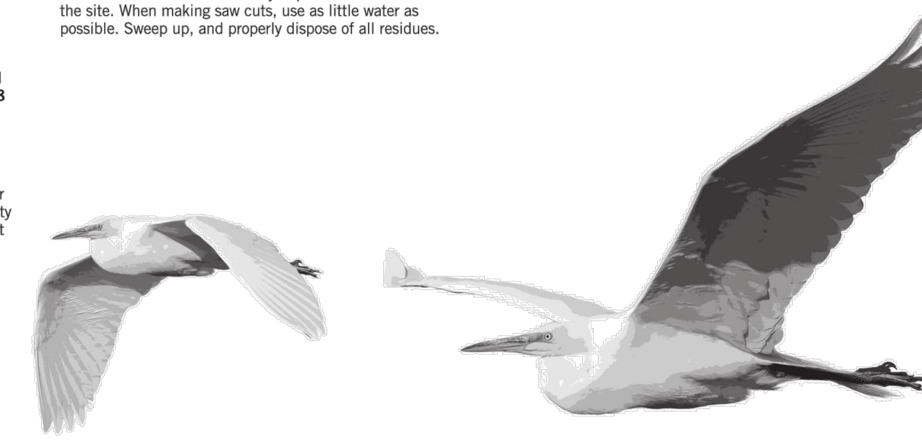

STORM DRAIN POLLUTERS MAY BE LIABLE FOR FINES OF UP TO $10,000 PER DAY!

250 Hamilton Avenue
Palo Alto, CA 94301
650.329.2211
cityofpaloalto.org

CITY OF PALO ALTO

USERNAME: BillShad Tue 08 Jul 2008 09:32am
FILENAME: C:\pwworking\sac\d0171341\G-06

DOCUMENT NUMBER: SFC_LP-G-1028-XXXXXXX

REV	DESCRIPTION	DATE	APPR.

HDR

DATE: JULY 2015
DESIGN: L. JONES
DRAWN: H. SUAREZ
CHECKED: P. HRADILEK

ENGINEERING CERTIFICATION
REGISTERED PROFESSIONAL ENGINEER LANCE M. JONES 68374 Exp. 9/30/17 CIVIL STATE OF CALIFORNIA
PROJECT ENGINEER DATE

SAN FRANCISQUITO CREEK JOINT POWERS AUTHORITY
ACCEPTED BY DISTRICT
PROJECT ENGINEER DATE

PROJECT NAME AND SHEET DESCRIPTION:
SAN FRANCISQUITO CREEK FLOOD REDUCTION, ECOSYSTEM RESTORATION, & RECREATION PROJECT
CITY OF PALO ALTO
SWPPP REQUIREMENTS

SCALE: N/A
VERIFY SCALES: 0 1"
BAR IS ONE INCH ON ORIGINAL DRAWING IF NOT ONE INCH ON THIS SHEET, ADJUST SCALES ACCORDINGLY

PROJECT NUMBER: 26284002
SHEET CODE: G-6
SHEET NUMBER: 6 OF 126

SURVEY CONTROL POINTS, SETTLEMENT PLATES PLAN

SCALE: 1"=100'

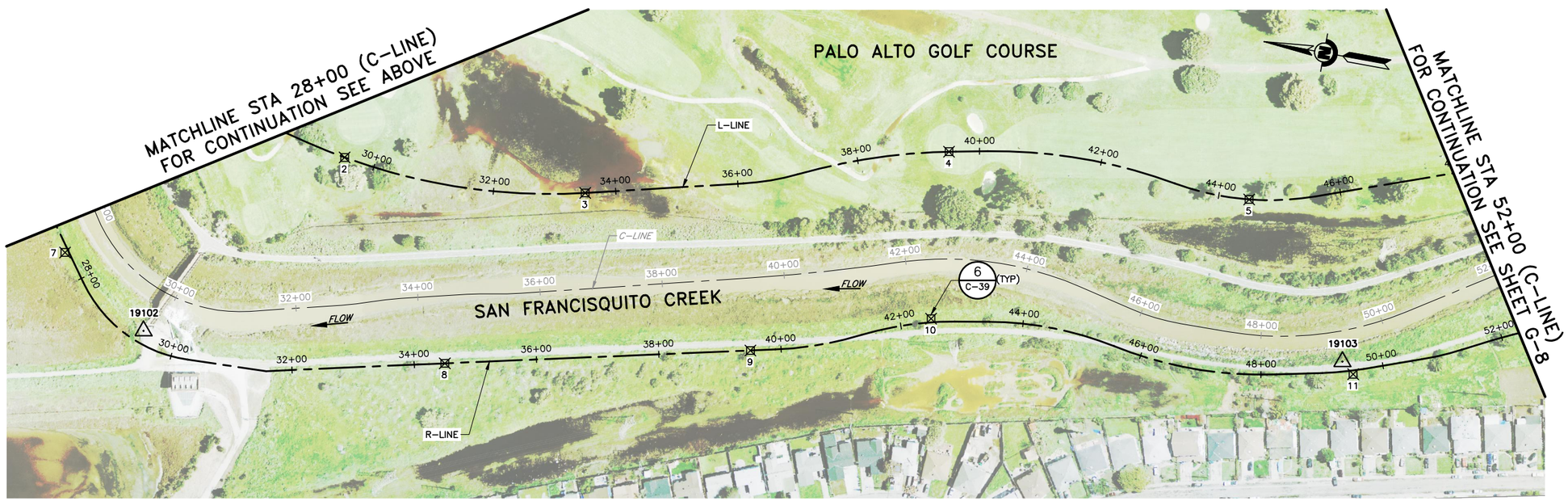

SURVEY CONTROL POINTS, SETTLEMENT PLATES PLAN

SCALE: 1"=100'

LEGEND:

237 △ SURVEY CONTROL POINT

⊠ SETTLEMENT PLATE LOCATION

NOTES:

1. REFER TO SHEET G-8 FOR POINT TABLES.
2. DATE OF PHOTOGRAPHY: MARCH 4, 2010
   HORIZONTAL DATUM:
   CALIFORNIA COORDINATE SYSTEM, ZONE 3
   NORTH AMERICAN DATUM OF 1983
   (NAD83, NSR 2007)
   VERTICAL DATUM:
   NORTH AMERICAN VERTICAL
   DATUM OF 1988 (NAVD88)
   PROJECT CONVERSION: EL. 0.0 NAVD 88=EL. -2.75 NAVD 29
   GROUND CONTROL SURVEY BY: TOWILL, INC.

REV	DESCRIPTION	DATE	APPR.

HDR

DATE JULY 2015
DESIGN L. JONES
DRAWN H. SUAREZ
CHECKED P. HRADILEK

ENGINEERING CERTIFICATION
REGISTERED PROFESSIONAL ENGINEER LANCE M. JONES 68574 EXP. 6/30/17 CIVIL STATE OF CALIFORNIA
PROJECT ENGINEER DATE

SAN FRANCISQUITO CREEK JOINT POWERS AUTHORITY
ACCEPTED BY DISTRICT
PROJECT ENGINEER DATE

PROJECT NAME AND SHEET DESCRIPTION:
SAN FRANCISQUITO CREEK FLOOD REDUCTION, ECOSYSTEM RESTORATION, & RECREATION PROJECT
SURVEY CONTROL AND SETTLEMENT PLATE LOCATIONS

SCALE 1" = 100'
VERIFY SCALES 0 1"
BAR IS ONE INCH ON ORIGINAL DRAWING IF NOT ONE INCH ON THIS SHEET, ADJUST SCALES ACCORDINGLY

PROJECT NUMBER 26284002
SHEET CODE: G-7
SHEET NUMBER: 7 OF 126

DOCUMENT NUMBER: SFC_LP-G-1028-XXXXXXX

USERNAME: BillShad Tue 08 Jul 2008 09:32am
FILENAME: C:\pwworking\sac\d0171341\G-07

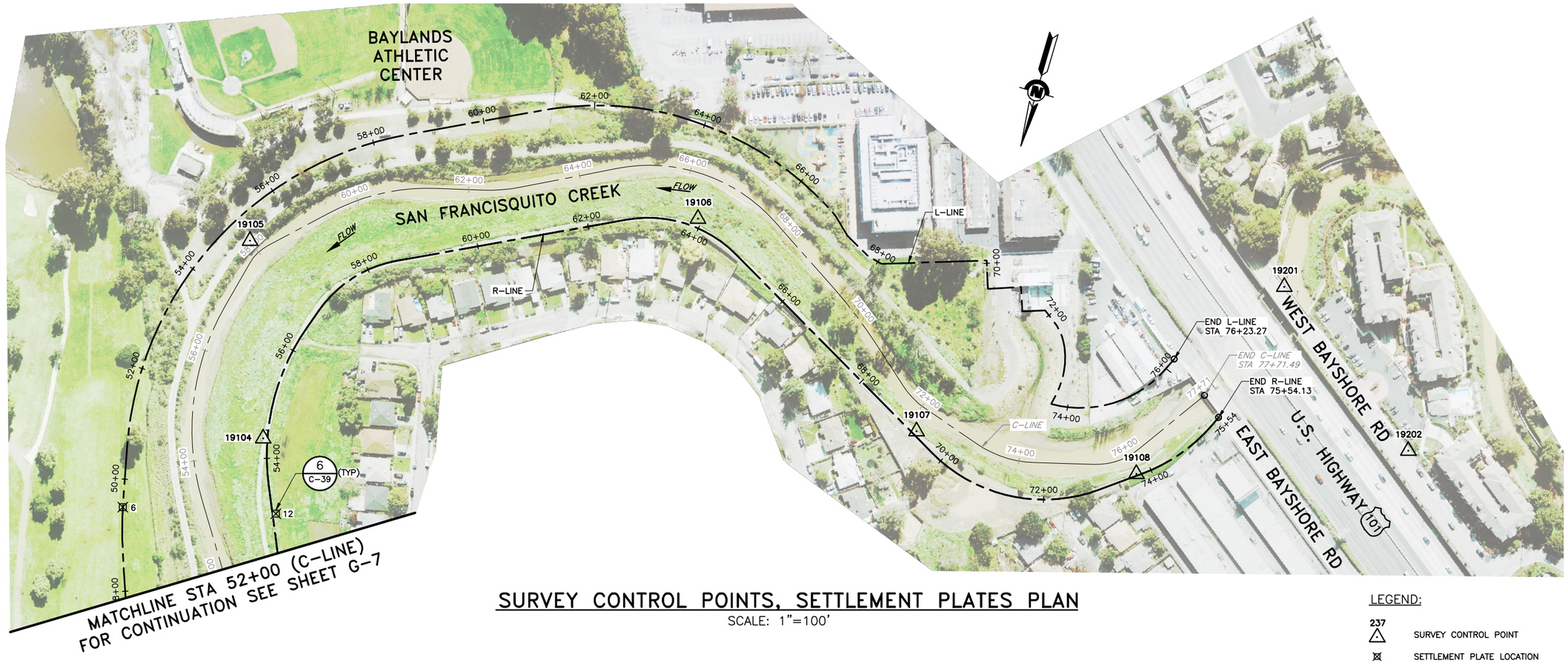

SURVEY CONTROL POINTS, SETTLEMENT PLATES PLAN

SCALE: 1"=100'

CONTROL POINT TABLE

POINT #	DESCRIPTION	ELEVATION	NORTHING	EASTING
19101	1/2"RBR/BE	13.81	1995836.71	6092295.69
19102	PK	16.24	1994502.92	6090321.55
19103	1/2"RBR/BE	15.09	1992566.53	6090625.87
19104	1/2"RBR/BE	15.55	1992101.46	6090806.29
19105	1/2"RBR/BE	15.97	1991770.12	6090927.60
19106	1/2"RBR/BE	15.95	1991508.27	6090172.94
19107	1/2"RBR/BE	17.08	1991762.31	6089693.00
19108	1/2"RBR/BE	17.28	1991725.09	6089295.87
19201	BEMT	18.96	1991331.37	6089136.66
19202	BEMT	18.17	1991549.37	6088842.67

SETTLEMENT PLATE POINT TABLE

POINT #	ALIGNMENT	STATION	OFFSET	PLATE EL	NORTHING	EASTING
1	L-LINE	24+50	6' LT	8.7	1994684.77	6090849.69
2	L-LINE	29+50	0	6.1	1994230.62	6090659.37
3	L-LINE	34+50	0	3.4	1993833.64	6090673.38
4	L-LINE	39+50	0	9.3	1993260.91	6090847.11
5	L-LINE	44+50	0	5.8	1992764.28	6090858.81
6	L-LINE	49+50	0	6.8	1992289.20	6091011.74
7	R-LINE	27+50	6' RT	10.5	1994652.33	6090424.31
8	R-LINE	34+50	0	10.0	1994008.97	6090358.25
9	R-LINE	39+50	0	10.4	1993521.40	6090469.07
10	R-LINE	42+50	6' LT	12.6	1993240.51	6090573.48
11	R-LINE	49+50	6' RT	10.5	1992545.54	6090608.72
12	R-LINE	53+00	6' RT	10.8	1992223.78	6090746.86

LEGEND:

237 △ SURVEY CONTROL POINT

⊠ SETTLEMENT PLATE LOCATION

NOTES:

1. DATE OF PHOTOGRAPHY: MARCH 4, 2010
   HORIZONTAL DATUM:
   CALIFORNIA COORDINATE SYSTEM, ZONE 3
   NORTH AMERICAN DATUM OF 1983
   (NAD83, NSR 2007)
   VERTICAL DATUM:
   NORTH AMERICAN VERTICAL
   DATUM OF 1988 (NAVD88)
   PROJECT CONVERSION: EL. 0.0 NAVD 88=EL. -2.75 NAVD 29
   GROUND CONTROL SURVEY BY: TOWILL, INC.
2. CONTROL POINTS SHOWN WERE SET IN CONJUNCTION WITH THE US ARMY CORPS OF ENGINEERS, SF DISTRICT, SAN FRANCISQUITO CREEK RESTORATION PROJECT SURVEY REPORT, DATED SEPTEMBER 12, 2008.
3. SETTLEMENT PLATE ELEVATIONS ARE APPROXIMATE. CONTRACTOR SHALL INSURE THAT THE GEOGRID LAYER IS NOT DAMAGED BY PLACEMENT OF SETTLEMENT PLATE. A 1 FOOT VERTICAL SEPARATION IS NECESSARY.

ABBREVIATIONS:

1/2" RBR/BE CAP – 1/2" REBAR WITH PLASTIC CAP STAMPED "BESTOR CONTROL"

BEMT – MAGNETIC NAIL WITH BRASS TAG STAMPED "BESTOR ENGINEERS"

PK – "PK" BRAND NAIL

REV	DESCRIPTION	DATE	APPR.

HDR

DATE JULY 2015
DESIGN L. JONES
DRAWN H. SUAREZ
CHECKED P. HRADILEK

ENGINEERING CERTIFICATION
REGISTERED PROFESSIONAL ENGINEER LANCE M. JONES C 68574 Exp. 6/30/17 CIVIL STATE OF CALIFORNIA
PROJECT ENGINEER DATE

SAN FRANCISQUITO CREEK JOINT POWERS AUTHORITY
ACCEPTED BY DISTRICT
PROJECT ENGINEER DATE

PROJECT NAME AND SHEET DESCRIPTION:
SAN FRANCISQUITO CREEK FLOOD REDUCTION, ECOSYSTEM RESTORATION, & RECREATION PROJECT
SURVEY CONTROL AND SETTLEMENT PLATE LOCATIONS

SCALE 1" = 100'
VERIFY SCALES 0 1"
BAR IS ONE INCH ON ORIGINAL DRAWING IF NOT ONE INCH ON THIS SHEET, ADJUST SCALES ACCORDINGLY

PROJECT NUMBER 26284002
SHEET CODE: G-8
SHEET NUMBER: 8 OF 126

DOCUMENT NUMBER: SFC_LP-G-1028-XXXXXXX

USERNAME: BillShad Tue 08 Jul 2008 09:32am
FILENAME: C:\pwworking\sac\d0171341\G-08

FOR CONTINUATION SEE SHEET G-10

LIMITS OF RUBBLE MOUND (SEE SHEETS G-8 & G-9)

POINT #	NORTHING	EASTING
1	1993314.64	6090490.37
2	1993328.86	6090492.51
3	1993359.40	6090486.08
4	1993376.85	6090491.06
5	1993409.95	6090481.44
6	1993434.94	6090476.91
7	1993479.97	6090462.50
8	1993499.85	6090454.55
9	1993547.78	6090445.15
10	1993584.74	6090443.36
11	1993618.72	6090438.38
12	1993638.50	6090433.69
13	1993663.08	6090430.75
14	1993706.24	6090422.06
15	1993721.20	6090420.14
16	1993735.37	6090418.69
17	1993741.06	6090418.27
18	1993793.77	6090409.00
19	1993845.44	6090398.41
20	1993896.39	6090384.07

LIMITS OF RUBBLE MOUND (SEE SHEETS G-8 & G-9)

POINT #	NORTHING	EASTING
21	1993946.75	6090373.24
22	1993996.18	6090363.37
23	1994009.04	6090355.38
24	1994014.91	6090348.39
25	1994011.72	6090338.50
26	1994020.81	6090340.07
27	1994031.30	6090344.21
28	1994076.33	6090336.14
29	1994119.55	6090318.15
30	1994159.80	6090312.12
31	1994197.19	6090302.25
32	1994232.00	6090296.93
33	1994266.09	6090282.08
34	1994272.91	6090267.58
35	1994287.00	6090238.76
36	1994292.20	6090207.84
37	1994296.57	6090195.45
38	1994302.12	6090193.40
39	1994305.46	6090189.49
40	1994321.18	6090137.95

LIMITS OF RUBBLE MOUND (SEE SHEETS G-8 & G-9)

POINT #	NORTHING	EASTING
41	1994342.04	6090088.80
42	1994349.19	6090064.92
43	1994348.85	6090056.55
44	1994339.28	6090047.87
45	1994329.19	6090046.14
46	1994315.28	6090052.05
47	1994264.72	6090071.73
48	1994215.59	6090090.71
49	1994183.81	6090115.07
50	1994136.93	6090137.55
51	1994101.72	6090152.20
52	1994083.61	6090167.80
53	1994055.16	6090176.48
54	1994027.67	6090185.32
55	1993997.51	6090196.43
56	1993951.28	6090225.54
57	1993904.71	6090250.69
58	1993854.43	6090279.33
59	1993801.60	6090302.78
60	1993752.18	6090322.51

LIMITS OF RUBBLE MOUND (SEE SHEETS G-8 & G-9)

POINT #	NORTHING	EASTING
61	1993700.60	6090345.33
62	1993651.61	6090364.12
63	1993614.52	6090382.27
64	1993567.24	6090391.85
65	1993561.08	6090382.40
66	1993551.12	6090378.94
67	1993536.03	6090381.04
68	1993516.79	6090369.71
69	1993474.33	6090383.52
70	1993447.36	6090387.30
71	1993437.67	6090393.39
72	1993406.34	6090412.70
73	1993375.82	6090427.73
74	1993355.34	6090432.11
75	1993339.22	6090441.89
76	1993329.98	6090454.50
77	1993323.80	6090474.99

NOTES:

1. ALL ACCESS GATES TO REMAIN LOCKED WHEN NOT IN USE.
2. SEE POINT TABLE, THIS SHEET FOR LIMITS OF RUBBLE MOUND. CONTRACTOR SHALL VERIFY THESE LIMITS IN FIELD.
3. SEE SHEET G-14 FOR TCE LINE AND CURVE TABLE.
4. CONTRACTOR SHALL CONSTRUCT A 6' TALL TEMPORARY CONSTRUCTION FENCE ALONG THE TCE ALIGNMENT.

STAGING AREA AND ACCESS POINTS

SCALE: 1"=100'

REV	DESCRIPTION	DATE	APPR.

HDR

DATE JULY 2015
DESIGN L. JONES
DRAWN H. SUAREZ
CHECKED P. HRADILEK

ENGINEERING CERTIFICATION
REGISTERED PROFESSIONAL ENGINEER LANCE M. JONES 08574 EXP. 6/30/17 CIVIL STATE OF CALIFORNIA
PROJECT ENGINEER DATE

SAN FRANCISQUITO CREEK JOINT POWERS AUTHORITY
ACCEPTED BY DISTRICT
PROJECT ENGINEER DATE

PROJECT NAME AND SHEET DESCRIPTION:
SAN FRANCISQUITO CREEK FLOOD REDUCTION, ECOSYSTEM RESTORATION, & RECREATION PROJECT
STAGING AREA AND ACCESS POINTS
TCE LINE & CURVE PLAN, RUBBLE MOUND LIMITS

SCALE 1" = 100'
VERIFY SCALES 0 1"
BAR IS ONE INCH ON ORIGINAL DRAWING IF NOT ONE INCH ON THIS SHEET, ADJUST SCALES ACCORDINGLY

PROJECT NUMBER 26284002
SHEET CODE: G-9
SHEET NUMBER: 9 OF 126

DOCUMENT NUMBER: SFC_LP-G-1028-XXXXXX

USERNAME: BillShad Tue 08 Jul 2008 09:32am
FILENAME: C:\pwworking\sec\d0171341\G-09

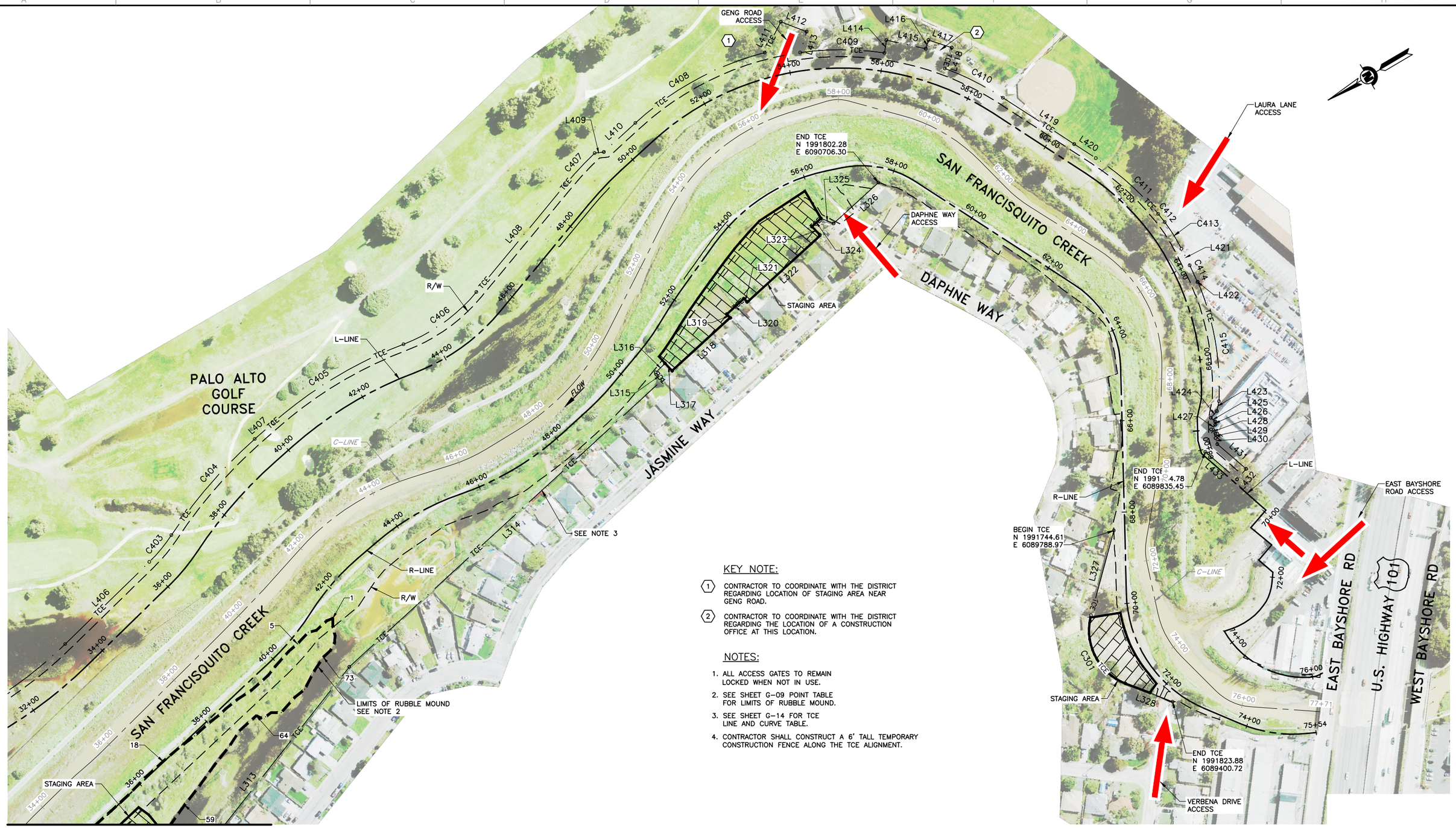

FOR CONTINUATION SEE SHEET G-9

KEY NOTE:

1. CONTRACTOR TO COORDINATE WITH THE DISTRICT REGARDING LOCATION OF STAGING AREA NEAR GENG ROAD.
2. CONTRACTOR TO COORDINATE WITH THE DISTRICT REGARDING THE LOCATION OF A CONSTRUCTION OFFICE AT THIS LOCATION.

NOTES:

1. ALL ACCESS GATES TO REMAIN LOCKED WHEN NOT IN USE.
2. SEE SHEET G-09 POINT TABLE FOR LIMITS OF RUBBLE MOUND.
3. SEE SHEET G-14 FOR TCE LINE AND CURVE TABLE.
4. CONTRACTOR SHALL CONSTRUCT A 6' TALL TEMPORARY CONSTRUCTION FENCE ALONG THE TCE ALIGNMENT.

STAGING AREA AND ACCESS POINTS

SCALE: 1"=100'

REV	DESCRIPTION	DATE	APPR.

HDR

DATE	JULY 2015
DESIGN	L. JONES
DRAWN	H. SUAREZ
CHECKED	P. HRADILEK

ENGINEERING CERTIFICATION

REGISTERED PROFESSIONAL ENGINEER LANCE M. JONES No. 66714 Exp. 6/30/17 CIVIL STATE OF CALIFORNIA

PROJECT ENGINEER DATE

SAN FRANCISQUITO CREEK JOINT POWERS AUTHORITY

ACCEPTED BY DISTRICT

PROJECT ENGINEER DATE

PROJECT NAME AND SHEET DESCRIPTION:

SAN FRANCISQUITO CREEK FLOOD REDUCTION, ECOSYSTEM RESTORATION, & RECREATION PROJECT

STAGING AREA AND ACCESS POINTS
TCE LINE & CURVE PLAN, RUBBLE MOUND LIMITS

SCALE	PROJECT NUMBER
1" = 100'	26284002
VERIFY SCALES 0 1" BAR IS ONE INCH ON ORIGINAL DRAWING IF NOT ONE INCH ON THIS SHEET, ADJUST SCALES ACCORDINGLY	SHEET CODE: G-10
	SHEET NUMBER: 9 OF 126

DOCUMENT NUMBER: SFC_LP-G-1028-XXXXXXX

USERNAME: BillShad Tue 08 Jul 2008 09:32am
FILENAME: C:\pwworking\sec\d0171341\G-10

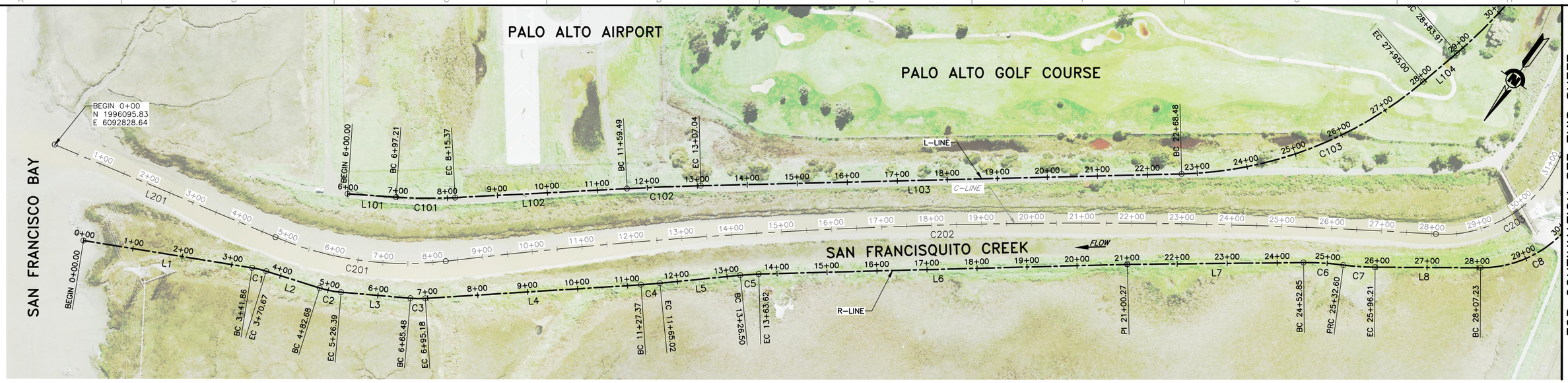

LEVEE ALIGNMENT RIGHT BANK AND LEFT BANK LINE AND CURVE PLAN

SCALE: 1"=100'

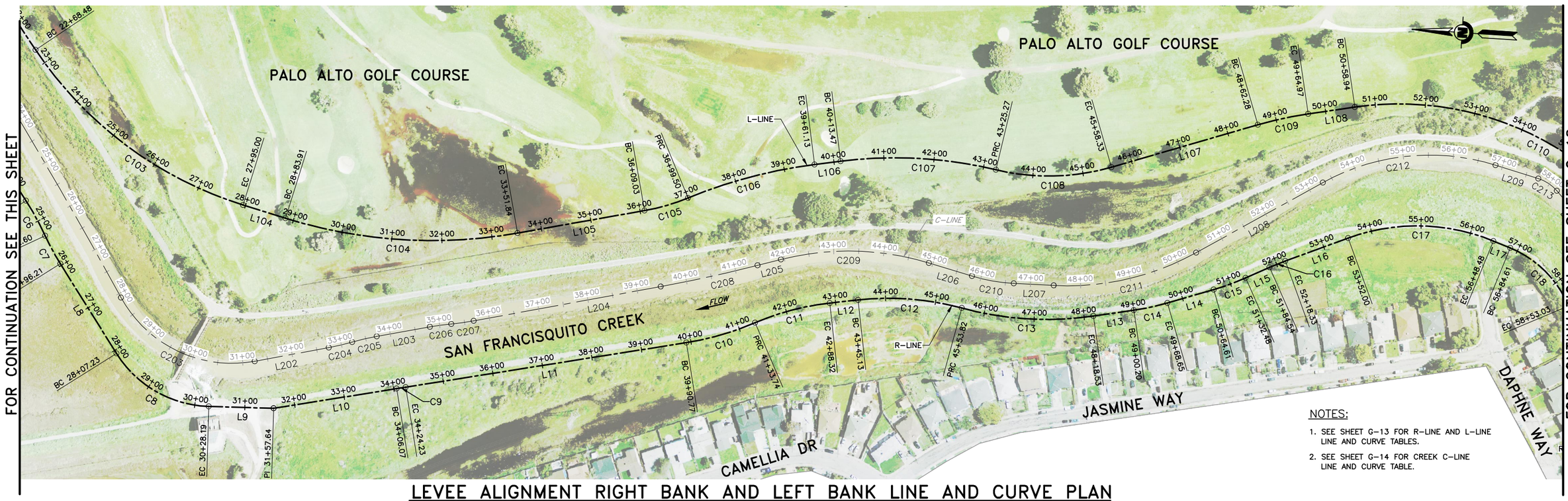

NOTES:

1. SEE SHEET G-13 FOR R-LINE AND L-LINE LINE AND CURVE TABLES.
2. SEE SHEET G-14 FOR CREEK C-LINE LINE AND CURVE TABLE.

LEVEE ALIGNMENT RIGHT BANK AND LEFT BANK LINE AND CURVE PLAN

SCALE: 1"=100'

USERNAME: BillShad Tue 08 Jul 2008 09:32am
FILENAME: C:\pwworking\sec\d0171341\G-11

DOCUMENT NUMBER: SFC_LP-G-1028-XXXXXXX

REV	DESCRIPTION	DATE	APPR.

HDR

DATE	JULY 2015
DESIGN	L. JONES
DRAWN	H. SUAREZ
CHECKED	P. HRADILEK

ENGINEERING CERTIFICATION

REGISTERED PROFESSIONAL ENGINEER LANCE M. JONES 68574 EXP. 12/31/11 CIVIL STATE OF CALIFORNIA

PROJECT ENGINEER DATE

SAN FRANCISQUITO CREEK JOINT POWERS AUTHORITY

ACCEPTED BY DISTRICT

PROJECT ENGINEER DATE

PROJECT NAME AND SHEET DESCRIPTION:

SAN FRANCISQUITO CREEK FLOOD REDUCTION, ECOSYSTEM RESTORATION, & RECREATION PROJECT

LEVEE ALIGNMENT RIGHT BANK AND LEFT BANK LINE AND CURVE PLAN

SCALE: 1" = 100'

VERIFY SCALES: 0 — 1"

BAR IS ONE INCH ON ORIGINAL DRAWING IF NOT ONE INCH ON THIS SHEET, ADJUST SCALES ACCORDINGLY

PROJECT NUMBER: 26284002

SHEET CODE: G-11

SHEET NUMBER: 11 OF 126

FOR CONTINUATION SEE SHEET G-11

NOTE:

1. SEE SHEET G-13 FOR R-LINE AND L-LINE LINE AND CURVE TABLES.
2. SEE SHEET G-14 FOR CREEK C-LINE LINE AND CURVE TABLES.

LEVEE ALIGNMENT RIGHT BANK AND LEFT BANK LINE AND CURVE PLAN

SCALE: 1"=100'

REV	DESCRIPTION	DATE	APPR.

HDR

DATE: JULY 2015
DESIGN: L. JONES
DRAWN: H. SUAREZ
CHECKED: P. HRADILEK

ENGINEERING CERTIFICATION
REGISTERED PROFESSIONAL ENGINEER LANCE M. JONES 08574 EXP. 12/31/17 CIVIL STATE OF CALIFORNIA
PROJECT ENGINEER DATE

SAN FRANCISQUITO CREEK JOINT POWERS AUTHORITY
ACCEPTED BY DISTRICT
PROJECT ENGINEER DATE

PROJECT NAME AND SHEET DESCRIPTION:
SAN FRANCISQUITO CREEK FLOOD REDUCTION, ECOSYSTEM RESTORATION, & RECREATION PROJECT
LEVEE ALIGNMENT RIGHT BANK AND LEFT BANK LINE AND CURVE PLAN

SCALE: 1" = 100'
VERIFY SCALES: 0 1"
BAR IS ONE INCH ON ORIGINAL DRAWING IF NOT ONE INCH ON THIS SHEET, ADJUST SCALES ACCORDINGLY

PROJECT NUMBER: 26284002
SHEET CODE: G-12
SHEET NUMBER: 12 OF 126

DOCUMENT NUMBER: SFC_LP-G-1028-XXXXXXX

USERNAME: BillShad Tue 08 Jul 2008 09:32am
FILENAME: C:\pwworking\sec\d0171341\G-12

R-LINE ALIGNMENT LINE AND CURVE TABLE

NUMBER	START STA	END STA	CURVE PI	LENGTH	DELTA	RADIUS	LINE/CHORD BRNG	START POINT COORDINATE	END POINT COORDINATE
L1	0+00.00	3+41.86	N/A	341.86'	N/A	N/A	S63°03'29"W	N 1996216.74, E 6092669.28	N 1996061.84, E 6092364.52
C1	3+41.86	3+70.67	3+56.29	28.81'	8°15'10"	200.00'	S67°11'04"W	N 1996061.84, E 6092364.52	N 1996050.68, E 6092337.99
L2	3+70.67	4+82.68	N/A	112.01'	N/A	N/A	S71°18'39"W	N 1996050.68, E 6092337.99	N 1996014.79, E 6092231.89
C2	4+82.68	5+26.39	5+04.62	43.71'	12°31'22"	200.00'	S65°02'58"W	N 1996014.79, E 6092231.89	N 1995996.39, E 6092192.34
L3	5+26.39	6+65.48	N/A	139.08'	N/A	N/A	S58°47'17"W	N 1995996.39, E 6092192.34	N 1995924.31, E 6092073.38
C3	6+65.48	6+95.18	6+80.35	29.70'	8°30'32"	200.00'	S54°32'01"W	N 1995924.31, E 6092073.38	N 1995907.09, E 6092049.21
L4	6+95.18	11+27.37	N/A	432.19'	N/A	N/A	S50°16'45"W	N 1995907.09, E 6092049.21	N 1995630.90, E 6091716.79
C4	11+27.37	11+65.02	11+46.19	37.65'	2°09'26"	1000.00'	S49°12'02"W	N 1995630.90, E 6091716.79	N 1995606.30, E 6091688.29
L5	11+65.02	13+26.50	N/A	161.48'	N/A	N/A	S48°07'19"W	N 1995606.30, E 6091688.29	N 1995498.50, E 6091568.05
C5	13+26.50	13+63.62	13+45.07	37.12'	4°15'12"	500.00'	S50°14'55"W	N 1995498.50, E 6091568.05	N 1995474.78, E 6091539.52
L6	13+63.62	21+00.27	N/A	736.65'	N/A	N/A	S52°22'30"W	N 1995474.78, E 6091539.52	N 1995025.06, E 6090956.08
L7	21+00.27	24+52.85	N/A	352.58'	N/A	N/A	S53°17'20"W	N 1995025.06, E 6090956.08	N 1994814.29, E 6090673.43
C6	24+52.85	25+32.60	24+92.79	79.75'	8°10'28"	559.00'	S57°22'34"W	N 1994814.29, E 6090673.43	N 1994771.33, E 6090606.32
C7	25+32.60	25+96.21	25+64.45	63.61'	7°17'22"	500.00'	S57°49'07"W	N 1994771.33, E 6090606.32	N 1994737.48, E 6090552.51
L8	25+96.21	28+07.23	N/A	211.01'	N/A	N/A	S54°10'26"W	N 1994737.48, E 6090552.51	N 1994613.97, E 6090381.42
C8	28+07.23	30+28.19	29+27.54	220.96'	56°16'05"	225.00'	S26°02'24"W	N 1994613.97, E 6090381.42	N 1994423.31, E 6090288.27
L9	30+28.19	31+57.64	N/A	129.45'	N/A	N/A	S2°05'39"E	N 1994423.31, E 6090288.27	N 1994293.95, E 6090293.00
L10	31+57.64	34+06.07	N/A	248.43'	N/A	N/A	S12°54'31"E	N 1994293.95, E 6090293.00	N 1994051.79, E 6090348.50
C9	34+06.07	34+24.23	34+15.15	18.15'	0°06'14"	10000.00'	S12°51'24"E	N 1994051.79, E 6090348.50	N 1994034.10, E 6090352.54
L11	34+24.23	39+90.77	N/A	566.55'	N/A	N/A	S12°48'17"E	N 1994034.10, E 6090352.54	N 1993481.64, E 6090478.10
C10	39+90.77	41+33.74	40+62.63	142.97'	14°14'46"	575.00'	S19°55'40"E	N 1993481.64, E 6090478.10	N 1993347.58, E 6090526.71
C11	41+33.74	42+88.32	42+11.60	154.58'	16°58'01"	522.00'	S18°34'02"E	N 1993347.58, E 6090526.71	N 1993201.58, E 6090575.75
L12	42+88.32	43+45.13	N/A	56.81'	N/A	N/A	S10°05'02"E	N 1993201.58, E 6090575.75	N 1993145.64, E 6090585.70
C12	43+45.13	45+53.82	44+50.72	208.68'	21°32'37"	555.00'	S0°41'17"W	N 1993145.64, E 6090585.70	N 1992938.20, E 6090583.21
C13	45+53.82	48+18.53	46+88.06	264.71'	23°30'52"	645.00'	S0°17'51"E	N 1992938.20, E 6090583.21	N 1992675.35, E 6090584.57
L13	48+18.53	49+00.20	N/A	81.67'	N/A	N/A	S12°03'17"E	N 1992675.35, E 6090584.57	N 1992595.48, E 6090601.63
C14	49+00.20	49+68.65	49+34.48	68.45'	7°50'36"	500.00'	S15°58'35"E	N 1992595.48, E 6090601.63	N 1992529.73, E 6090620.45
L14	49+68.65	50+64.61	N/A	95.96'	N/A	N/A	S19°53'53"E	N 1992529.73, E 6090620.45	N 1992439.50, E 6090653.11
C15	50+64.61	51+32.48	50+98.60	67.88'	7°46'42"	500.00'	S23°47'14"E	N 1992439.50, E 6090653.11	N 1992377.43, E 6090680.47
L15	51+32.48	51+84.54	N/A	52.06'	N/A	N/A	S27°40'34"E	N 1992377.43, E 6090680.47	N 1992331.33, E 6090704.65
C16	51+84.54	52+18.33	52+01.44	33.78'	3°49'58"	505.00'	S25°45'35"E	N 1992331.33, E 6090704.65	N 1992300.91, E 6090719.33
L16	52+18.33	53+52.00	N/A	133.67'	N/A	N/A	S23°50'36"E	N 1992300.91, E 6090719.33	N 1992178.65, E 6090773.36
C17	53+52.00	56+48.48	55+07.42	296.48'	42°28'04"	400.00'	S2°36'35"E	N 1992178.65, E 6090773.36	N 1991889.21, E 6090786.56
L17	56+48.48	56+84.61	N/A	36.14'	N/A	N/A	S18°37'27"W	N 1991889.21, E 6090786.56	N 1991854.96, E 6090775.01
C18	56+84.61	58+53.03	57+73.41	168.42'	44°52'57"	215.00'	S41°03'56"W	N 1991854.96, E 6090775.01	N 1991731.20, E 6090667.18
L18	58+53.03	62+68.91	N/A	415.87'	N/A	N/A	S63°30'24"W	N 1991731.20, E 6090667.18	N 1991545.69, E 6090294.98
C19	62+68.91	64+82.07	63+84.69	213.16'	55°30'52"	220.00'	N88°44'10"W	N 1991545.69, E 6090294.98	N 1991550.21, E 6090090.11
L19	64+82.07	69+79.19	N/A	497.12'	N/A	N/A	N60°58'44"W	N 1991550.21, E 6090090.11	N 1991791.38, E 6089655.41
C20	69+79.19	73+00.40	71+60.09	321.22'	65°43'47"	280.00'	S86°09'23"W	N 1991791.38, E 6089655.41	N 1991771.00, E 6089352.20
L20	73+00.40	73+84.19	N/A	83.79'	N/A	N/A	S53°17'29"W	N 1991771.00, E 6089352.20	N 1991720.92, E 6089285.03
C21	73+84.19	75+34.05	74+60.72	149.86'	28°37'13"	300.00'	S38°58'53"W	N 1991720.92, E 6089285.03	N 1991605.64, E 6089191.74
L21	75+34.05	75+54.13	N/A	20.08'	N/A	N/A	S24°40'16"W	N 1991605.64, E 6089191.74	N 1991587.39, E 6089183.36

L-LINE ALIGNMENT LINE AND CURVE TABLE

NUMBER	START STA	END STA	CURVE PI	LENGTH	DELTA	RADIUS	LINE/CHORD BRNG	START POINT COORDINATE	END POINT COORDINATE
L101	6+00.00	6+97.21	N/A	97.21'	N/A	N/A	S57°48'42"W	N 1995830.02, E 6092298.02	N 1995778.23, E 6092215.76
C101	6+97.21	8+15.37	7+56.36	118.16'	6°56'37"	975.00'	S54°20'24"W	N 1995778.23, E 6092215.76	N 1995709.39, E 6092119.81
L102	8+15.37	11+59.49	N/A	344.13'	N/A	N/A	S50°52'05"W	N 1995709.39, E 6092119.81	N 1995492.21, E 6091852.88
C102	11+59.49	13+07.04	12+33.27	147.54'	1°35'42"	5300.00'	S51°39'56"W	N 1995492.21, E 6091852.88	N 1995400.70, E 6091737.15
L103	13+07.04	22+68.48	N/A	961.44'	N/A	N/A	S52°27'47"W	N 1995400.70, E 6091737.15	N 1994814.92, E 6090974.76
C103	22+68.48	27+95.00	25+42.36	526.53'	38°55'34"	775.00'	S33°00'00"W	N 1994814.92, E 6090974.76	N 1994381.78, E 6090693.48
L104	27+95.00	28+83.91	N/A	88.90'	N/A	N/A	S13°32'13"W	N 1994381.78, E 6090693.48	N 1994295.35, E 6090672.67
C104	28+83.91	33+51.84	31+22.42	467.94'	27°21'29"	980.00'	S0°08'31"E	N 1994295.35, E 6090672.67	N 1993831.85, E 6090673.81
L105	33+51.84	36+09.03	N/A	257.19'	N/A	N/A	S13°49'15"E	N 1993831.85, E 6090673.81	N 1993582.10, E 6090735.25
C105	36+09.03	36+99.50	36+54.44	90.47'	12°20'30"	420.00'	S19°59'30"E	N 1993582.10, E 6090735.25	N 1993497.25, E 6090766.12
C106	36+99.50	39+61.13	38+31.09	261.63'	15°08'31"	990.00'	S18°35'30"E	N 1993497.25, E 6090766.12	N 1993249.99, E 6090849.30
L106	39+61.13	40+13.47	N/A	52.34'	N/A	N/A	S11°01'15"E	N 1993249.99, E 6090849.30	N 1993198.62, E 6090859.30
C107	40+13.47	43+25.27	41+71.10	311.80'	20°46'22"	860.00'	S0°38'04"E	N 1993198.62, E 6090859.30	N 1992888.55, E 6090862.74
C108	43+25.27	45+58.33	44+44.47	233.06'	29°40'26"	450.00'	S5°05'06"E	N 1992888.55, E 6090862.74	N 1992658.99, E 6090883.16
L107	45+58.33	48+62.28	N/A	303.95'	N/A	N/A	S19°55'20"E	N 1992658.99, E 6090883.16	N 1992373.23, E 6090986.73
C109	48+62.28	49+64.97	49+13.70	102.69'	7°50'41"	750.00'	S15°59'59"E	N 1992373.23, E 6090986.73	N 1992274.60, E 6091015.01
L108	49+64.97	50+58.94	N/A	93.98'	N/A	N/A	S12°04'39"E	N 1992274.60, E 6091015.01	N 1992182.70, E 6091034.68
C110	50+58.94	58+63.84	55+32.13	804.90'	75°36'08"	610.00'	S25°43'26"W	N 1992182.70, E 6091034.68	N 1991509.04, E 6090710.12
L109	58+63.84	61+06.33	N/A	242.48'	N/A	N/A	S63°30'28"W	N 1991509.04, E 6090710.12	N 1991400.87, E 6090493.10
C111	61+06.33	63+00.00	62+04.14	193.67'	19°48'56"	560.00'	S73°24'56"W	N 1991400.87, E 6090493.10	N 1991345.87, E 6090308.41
C112	63+00.00	63+78.20	63+39.21	78.20'	10°17'07"	435.65'	S88°27'57"W	N 1991345.87, E 6090308.41	N 1991343.78, E 6090230.34
L110	63+78.20	63+99.88	N/A	21.68'	N/A	N/A	N86°23'29"W	N 1991343.78, E 6090230.34	N 1991345.14, E 6090208.70
C113	63+99.88	66+85.80	65+46.03	285.92'	29°15'12"	560.00'	N71°45'53"W	N 1991345.14, E 6090208.70	N 1991433.64, E 6089940.08
L111	66+85.80	67+28.01	N/A	42.21'	N/A	N/A	N47°16'54"W	N 1991433.64, E 6089940.08	N 1991462.28, E 6089909.07
L112	67+28.01	67+78.70	N/A	50.68'	N/A	N/A	N61°25'11"W	N 1991462.28, E 6089909.07	N 1991486.53, E 6089864.56
L113	67+78.70	68+07.25	N/A	28.55'	N/A	N/A	N75°27'51"W	N 1991486.53, E 6089864.56	N 1991493.69, E 6089836.92
L114	68+07.25	69+94.99	N/A	187.73'	N/A	N/A	S71°48'23"W	N 1991493.69, E 6089836.92	N 1991435.08, E 6089658.57
L115	69+94.99	70+45.67	N/A	50.69'	N/A	N/A	N18°52'16"W	N 1991435.08, E 6089658.57	N 1991483.04, E 6089642.18
L116	70+45.67	71+04.64	N/A	58.96'	N/A	N/A	S70°10'17"W	N 1991483.04, E 6089642.18	N 1991463.04, E 6089586.71
L117	71+04.64	71+48.24	N/A	43.61'	N/A	N/A	N19°18'01"W	N 1991463.04, E 6089586.71	N 1991504.20, E 6089572.30
L118	71+48.24	71+88.97	N/A	40.73'	N/A	N/A	S71°20'36"W	N 1991504.20, E 6089572.30	N 1991491.17, E 6089533.71
L119	71+88.97	72+14.13	N/A	25.16'	N/A	N/A	N54°10'38"W	N 1991491.17, E 6089533.71	N 1991505.89, E 6089513.31
C114	72+14.13	72+65.05	72+40.22	50.92'	30°43'02"	94.97'	N38°49'07"W	N 1991505.89, E 6089513.31	N 1991545.09, E 6089481.77
C115	72+65.05	73+51.59	73+09.70	86.55'	34°48'28"	142.46'	N6°03'21"W	N 1991545.09, E 6089481.77	N 1991629.83, E 6089472.78
L120	73+51.59	73+70.19	N/A	18.60'	N/A	N/A	N11°20'53"E	N 1991629.83, E 6089472.78	N 1991648.07, E 6089476.44
C116	73+70.19	75+92.13	74+93.72	221.94'	62°38'28"	203.00'	S59°03'25"W	N 1991648.07, E 6089476.44	N 1991539.55, E 6089295.43
C117	75+92.13	76+23.27	76+08.03	31.13'	28°46'20"	62.00'	S13°21'01"W	N 1991539.55, E 6089295.43	N 1991509.58, E 6089288.32

USERNAME: BillShad Tue 08 Jul 2008 09:32am
FILENAME: C:\pwworking\sac\d0171341\G-13

DOCUMENT NUMBER: SFC_LP-G-1028-XXXXXXX

REV	DESCRIPTION	DATE	APPR.

HDR

DATE	ENGINEERING CERTIFICATION
JULY 2015	REGISTERED PROFESSIONAL ENGINEER LANCE M. JONES C 68574 Exp. 6/30/11 CIVIL STATE OF CALIFORNIA
DESIGN L. JONES	
DRAWN H. SUAREZ	
CHECKED P. HRADILEK	PROJECT ENGINEER DATE

SAN FRANCISQUITO CREEK JOINT POWERS AUTHORITY

ACCEPTED BY DISTRICT

PROJECT ENGINEER DATE

PROJECT NAME AND SHEET DESCRIPTION:

SAN FRANCISQUITO CREEK FLOOD REDUCTION, ECOSYSTEM RESTORATION, & RECREATION PROJECT

LEVEE ALIGNMENT RIGHT BANK AND LEFT BANK LINE AND CURVE TABLE

SCALE: NONE

VERIFY SCALES: 0 1"
BAR IS ONE INCH ON ORIGINAL DRAWING IF NOT ONE INCH ON THIS SHEET, ADJUST SCALES ACCORDINGLY

PROJECT NUMBER: 26284002

SHEET CODE: G-13

SHEET NUMBER: 13 OF 126

C-LINE ALIGNMENT LINE AND CURVE TABLE

NUMBER	START STA	END STA	CURVE PI	LENGTH	DELTA	RADIUS	LINE/CHORD BRNG
L201	0+00.00	4+78.56	N/A	478.56'	N/A	N/A	S76°36'38"W
C201	4+78.56	8+26.26	6+56.36	347.71'	29°30'51"	675.00'	S61°51'12"W
C202	8+26.26	28+08.86	18+20.31	1982.60'	10°25'23"	10898.51'	S52°18'26"W
C203	28+08.86	31+24.36	29+91.05	315.49'	71°43'54"	252.00'	S21°39'08"W
L202	31+24.36	32+74.51	N/A	150.15'	N/A	N/A	S14°12'49"E
C204	32+74.51	33+22.40	32+98.47	47.89'	5°29'16"	500.00'	S16°57'28"E
C205	33+22.40	33+72.59	33+47.52	50.19'	5°45'05"	500.00'	S16°49'33"E
L203	33+72.59	34+80.44	N/A	107.85'	N/A	N/A	S13°57'00"E
C206	34+80.44	35+23.36	35+01.91	42.92'	4°55'07"	500.00'	S11°29'27"E
C207	35+23.36	35+68.58	35+45.99	45.22'	5°10'56"	500.00'	S11°37'21"E
L204	35+68.58	39+47.76	N/A	379.18'	N/A	N/A	S14°12'49"E
C208	39+47.76	41+45.19	40+46.51	197.43'	3°46'14"	3000.00'	S16°05'56"E
L205	41+45.19	41+93.51	N/A	48.32'	N/A	N/A	S17°59'04"E
C209	41+93.51	44+92.11	43+46.59	298.59'	31°06'20"	550.00'	S2°25'53"E
L206	44+92.11	45+81.82	N/A	89.72'	N/A	N/A	S13°07'17"W
C210	45+81.82	46+66.95	46+24.60	85.13'	13°56'08"	350.00'	S6°09'13"W
L207	46+66.95	47+46.57	N/A	79.62'	N/A	N/A	S0°48'52"E
C211	47+46.57	50+41.72	48+98.08	295.15'	31°54'25"	530.00'	S16°46'04"E
L208	50+41.72	53+30.28	N/A	288.57'	N/A	N/A	S32°43'16"E
C212	53+30.28	56+85.98	55+18.50	355.70'	46°19'07"	440.00'	S9°33'43"E
L209	56+85.98	57+75.57	N/A	89.59'	N/A	N/A	S13°35'51"W
C213	57+75.57	58+20.31	57+98.54	44.74'	32°02'23"	80.00'	S29°37'02"W
L210	58+20.31	59+44.51	N/A	124.21'	N/A	N/A	S45°38'14"W
C214	59+44.51	61+43.06	60+46.17	198.54'	30°20'06"	375.00'	S60°48'17"W
L211	61+43.06	62+23.42	N/A	80.36'	N/A	N/A	S75°58'20"W
C215	62+23.42	62+93.28	62+58.51	69.86'	13°20'35"	300.00'	S69°18'02"W
L212	62+93.28	64+67.62	N/A	174.34'	N/A	N/A	S62°37'44"W
C216	64+67.62	67+79.50	66+39.31	311.88'	59°33'54"	300.00'	N87°35'19"W
L213	67+79.50	69+35.65	N/A	156.15'	N/A	N/A	N57°48'22"W
C217	69+35.65	70+63.22	69+99.55	127.57'	8°35'56"	850.00'	N53°30'24"W
L214	70+63.22	71+51.73	N/A	88.51'	N/A	N/A	N49°12'26"W
C218	71+51.73	72+05.11	71+78.77	53.38'	22°39'16"	135.00'	N60°32'04"W
L215	72+05.11	73+18.41	N/A	113.30'	N/A	N/A	N71°51'42"W
C219	73+18.41	74+26.72	73+74.08	108.30'	32°39'35"	190.00'	N88°11'29"W
L216	74+26.72	75+33.64	N/A	106.93'	N/A	N/A	S75°28'43"W
C220	75+33.64	76+19.61	75+78.57	85.97'	41°02'53"	120.00'	S54°57'17"W
L217	76+19.61	77+71.49	N/A	151.87'	N/A	N/A	S34°25'50"W

RIGHT BANK TCE LINE AND CURVE TABLE

NUMBER	CURVE PI	LENGTH	DELTA	RADIUS	LINE/CHORD BRNG	CHORD LENGTH
L301	N/A	25.00'	N/A	N/A	S56°04'57"W	N/A
L302	N/A	35.67'	N/A	N/A	S84°05'10"W	N/A
L303	N/A	17.27'	N/A	N/A	S54°28'24"W	N/A
L304	N/A	171.52'	N/A	N/A	S45°37'29"W	N/A
L305	N/A	10.44'	N/A	N/A	S15°29'49"E	N/A

RIGHT BANK TCE LINE AND CURVE TABLE

NUMBER	CURVE PI	LENGTH	DELTA	RADIUS	LINE/CHORD BRNG	CHORD LENGTH
L306	N/A	133.58'	N/A	N/A	S61°35'14"W	N/A
L307	N/A	171.69'	N/A	N/A	S53°05'44"W	N/A
L308	N/A	209.87'	N/A	N/A	S53°21'54"W	N/A
L309	N/A	171.49'	N/A	N/A	S67°07'53"W	N/A
L310	N/A	289.48'	N/A	N/A	S45°47'01"W	N/A
L311	N/A	101.94'	N/A	N/A	S2°54'06"W	N/A
L312	N/A	283.90'	N/A	N/A	S66°58'47"W	N/A
L313	N/A	1106.39'	N/A	N/A	S21°12'00"E	N/A
L314	N/A	929.47'	N/A	N/A	S12°01'14"E	N/A
L315	N/A	21.77'	N/A	N/A	N78°47'23"E	N/A
L316	N/A	27.94'	N/A	N/A	S14°13'23"E	N/A
L317	N/A	22.68'	N/A	N/A	S75°32'32"W	N/A
L318	N/A	171.70'	N/A	N/A	S11°53'04"E	N/A
L319	N/A	11.02'	N/A	N/A	N79°50'47"E	N/A
L320	N/A	50.00'	N/A	N/A	S11°46'42"E	N/A
L321	N/A	9.85'	N/A	N/A	S75°44'45"W	N/A
L322	N/A	216.52'	N/A	N/A	S12°07'55"E	N/A
L323	N/A	25.12'	N/A	N/A	N76°35'48"E	N/A
L324	N/A	26.70'	N/A	N/A	S11°53'45"E	N/A
L325	N/A	29.70'	N/A	N/A	S52°13'20"W	N/A
L326	N/A	132.76'	N/A	N/A	S11°48'01"E	N/A

RIGHT BANK TCE LINE AND CURVE TABLE

NUMBER	CURVE PI	LENGTH	DELTA	RADIUS	LINE/CHORD BRNG	CHORD LENGTH
L327	N/A	192.40'	N/A	N/A	N44°26'32"W	N/A
C301	3+04.75	183.04'	83°53'55"	125.00'	N86°23'29"W	167.12
L328	N/A	110.60'	N/A	N/A	S51°39'34"W	N/A

LEFT BANK TCE LINE AND CURVE TABLE

NUMBER	CURVE PI	LENGTH	DELTA	RADIUS	LINE/CHORD BRNG	CHORD LENGTH
L401	N/A	81.41'	N/A	N/A	N52°44'29"E	N/A
L402	N/A	40.40'	N/A	N/A	S37°15'31"E	N/A
L403	N/A	58.48'	N/A	N/A	S52°27'47"W	N/A
L404	N/A	21.49'	N/A	N/A	S51°35'37"W	N/A
C401	4+39.95	459.52'	37°11'14"	708.00'	S32°07'50"W	451.50
L405	N/A	88.90'	N/A	N/A	S13°32'13"W	N/A
C402	9+72.40	435.94'	27°21'29"	913.00'	S0°08'31"E	431.82
L406	N/A	257.19'	N/A	N/A	S13°49'15"E	N/A
C403	14+81.50	76.04'	12°20'30"	353.00'	S19°59'30"E	75.89
C404	16+59.86	279.34'	15°08'31"	1057.00'	S18°35'30"E	278.53
L407	N/A	52.34'	N/A	N/A	S11°01'15"E	N/A
C405	20+20.95	336.09'	20°46'22"	927.00'	S0°38'04"E	334.25
C406	22+88.59	198.36'	29°40'26"	383.00'	S5°05'06"E	196.15
L408	N/A	303.95'	N/A	N/A	S19°55'20"E	N/A
C407	27+37.27	95.56'	6°42'05"	817.00'	S16°34'17"E	95.50
L409	N/A	20.15'	N/A	N/A	S23°54'23"W	N/A
L410	N/A	93.98'	N/A	N/A	S12°04'39"E	N/A
C408	30+65.11	325.33'	28°01'48"	665.01'	S1°56'16"W	322.10
L411	N/A	75.93'	N/A	N/A	S31°53'29"E	N/A
L412	N/A	60.43'	N/A	N/A	S51°15'57"W	N/A
L413	N/A	47.92'	N/A	N/A	N42°10'04"W	N/A
C409	35+02	185.25'	16°19'46"	650.00'	S30°44'26"W	184.63
L414	N/A	28.04'	N/A	N/A	S51°05'41"E	N/A
L415	N/A	87.89'	N/A	N/A	S42°41'24"W	N/A
L416	N/A	20.08'	N/A	N/A	S41°23'37"E	N/A
L417	N/A	53.67'	N/A	N/A	S48°36'23"W	N/A
L418	N/A	48.04'	N/A	N/A	N41°23'37"W	N/A
C410	39+03.20	142.40'	12°33'07"	650.00'	S57°14'54"W	142.11
L419	N/A	186.15'	N/A	N/A	S63°30'28"W	N/A
L420	N/A	56.33'	N/A	N/A	S63°30'28"W	N/A
C411	43+09.08	183.56'	17°31'42"	600.00'	S72°16'19"W	182.84
C412	44+11.58	22.88'	2°11'05"	600.00'	S82°07'43"W	22.88
C413	44+57.81	69.39'	10°34'24"	376.00'	S88°30'27"W	69.29
L421	N/A	40.28'	N/A	N/A	N86°12'21"W	N/A
C414	45+52.99	40.60'	3°51'27"	603.00'	N84°16'37"W	40.59
L422	N/A	0.91'	N/A	N/A	S18°47'46"E	N/A
C415	47+10.26	267.44'	26°00'21"	589.22'	N69°35'53"W	265.15
L423	N/A	22.11'	N/A	N/A	N47°16'54"W	N/A
L424	N/A	19.87'	N/A	N/A	N18°16'06"W	N/A
L425	N/A	12.31'	N/A	N/A	S71°11'36"W	N/A
L426	N/A	7.05'	N/A	N/A	N61°25'11"W	N/A
L427	N/A	13.78'	N/A	N/A	N18°48'25"W	N/A
L428	N/A	12.67'	N/A	N/A	S71°11'36"W	N/A
L429	N/A	10.46'	N/A	N/A	N61°25'11"W	N/A
L430	N/A	13.96'	N/A	N/A	N75°27'51"W	N/A
L431	N/A	82.74'	N/A	N/A	S71°12'14"W	N/A
L432	N/A	30.00'	N/A	N/A	N18°47'46"W	N/A
L433	N/A	91.72'	N/A	N/A	N71°12'14"E	N/A

USERNAME: BillShad Tue 08 Jul 2008 09:32am
FILENAME: C:\pwworking\sac\d0171341\G-14

DOCUMENT NUMBER: SFC_LP-G-1028-XXXXXXX

REV	DESCRIPTION	DATE	APPR.

HDR

DATE JULY 2015
DESIGN L. JONES
DRAWN H. SUAREZ
CHECKED P. HRADILEK

ENGINEERING CERTIFICATION
REGISTERED PROFESSIONAL ENGINEER LANCE M. JONES 065714 EXP. 6/30/17 CIVIL STATE OF CALIFORNIA
PROJECT ENGINEER DATE

SAN FRANCISQUITO CREEK JOINT POWERS AUTHORITY
ACCEPTED BY DISTRICT
PROJECT ENGINEER DATE

PROJECT NAME AND SHEET DESCRIPTION:
SAN FRANCISQUITO CREEK FLOOD REDUCTION, ECOSYSTEM RESTORATION, & RECREATION PROJECT
C-LINE LINE AND CURVE TABLE
TCE ALIGNMENT LINE AND CURVE TABLE

SCALE NONE
VERIFY SCALES 0 1"
BAR IS ONE INCH ON ORIGINAL DRAWING IF NOT ONE INCH ON THIS SHEET, ADJUST SCALES ACCORDINGLY

PROJECT NUMBER 26284002
SHEET CODE: G-14
SHEET NUMBER: 14 OF 126

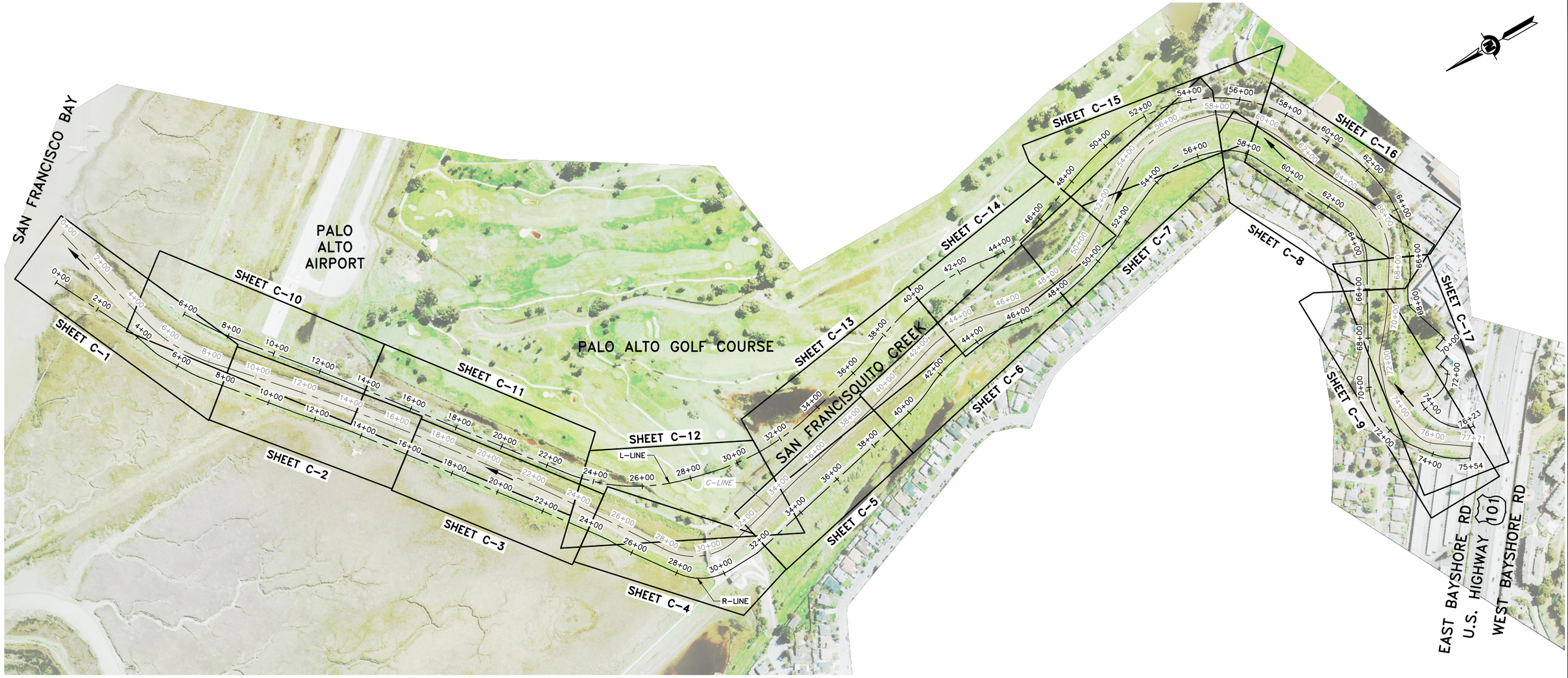

LEVEE STATIONING AND SHEET LAYOUT PLAN

SCALE: 1"=200'

USERNAME: BillShad Tue 08 Jul 2008 09:32am
FILENAME: C:\pwworking\sec\d0171341\G-15

DOCUMENT NUMBER: SFC_LP-G-1028-XXXXXXX

REV	DESCRIPTION	DATE	APPR.

HDR

DATE	JULY 2015
DESIGN	L. JONES
DRAWN	H. SUAREZ
CHECKED	P. HRADILEK

ENGINEERING CERTIFICATION

REGISTERED PROFESSIONAL ENGINEER LANCE M. JONES 68574 Exp. 12/31/11 CIVIL STATE OF CALIFORNIA

PROJECT ENGINEER DATE

SAN FRANCISQUITO CREEK JOINT POWERS AUTHORITY

ACCEPTED BY DISTRICT

PROJECT ENGINEER DATE

PROJECT NAME AND SHEET DESCRIPTION:

SAN FRANCISQUITO CREEK FLOOD REDUCTION, ECOSYSTEM RESTORATION, & RECREATION PROJECT

LEVEE STATIONING AND SHEET LAYOUT PLAN

SCALE: 1" = 200'

VERIFY SCALES: 0 — 1"
BAR IS ONE INCH ON ORIGINAL DRAWING IF NOT ONE INCH ON THIS SHEET, ADJUST SCALES ACCORDINGLY

PROJECT NUMBER: 26284002

SHEET CODE: G-15

SHEET NUMBER: 15 OF 126

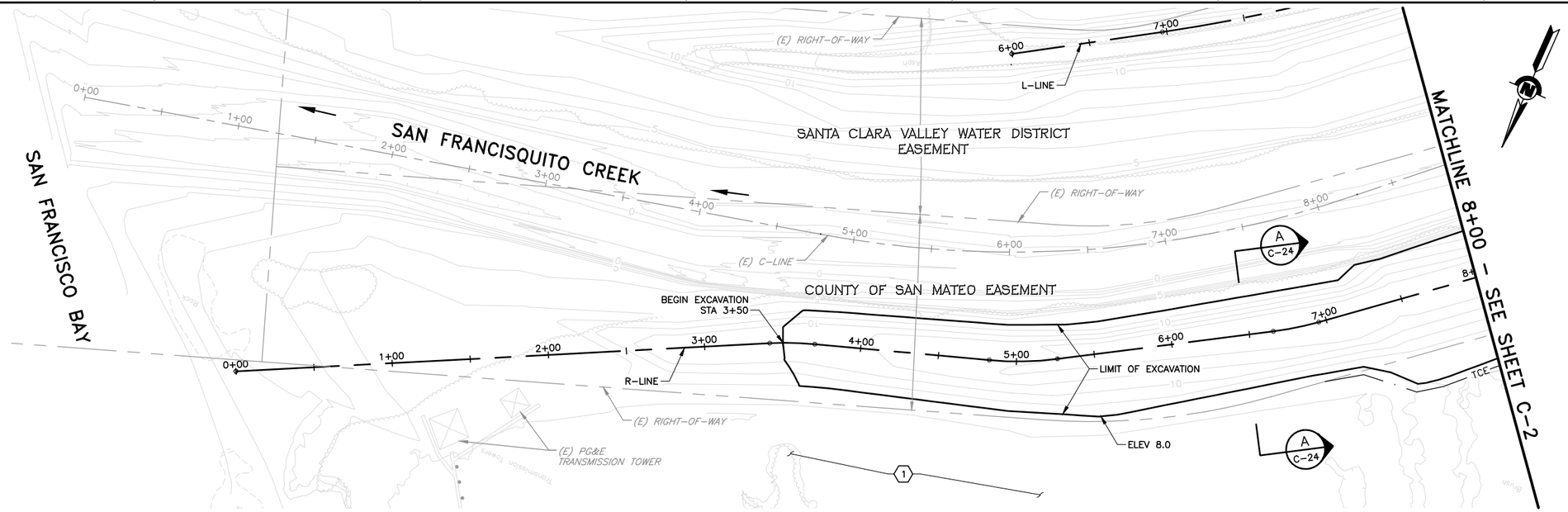

PLAN

SCALE: 1"=40'

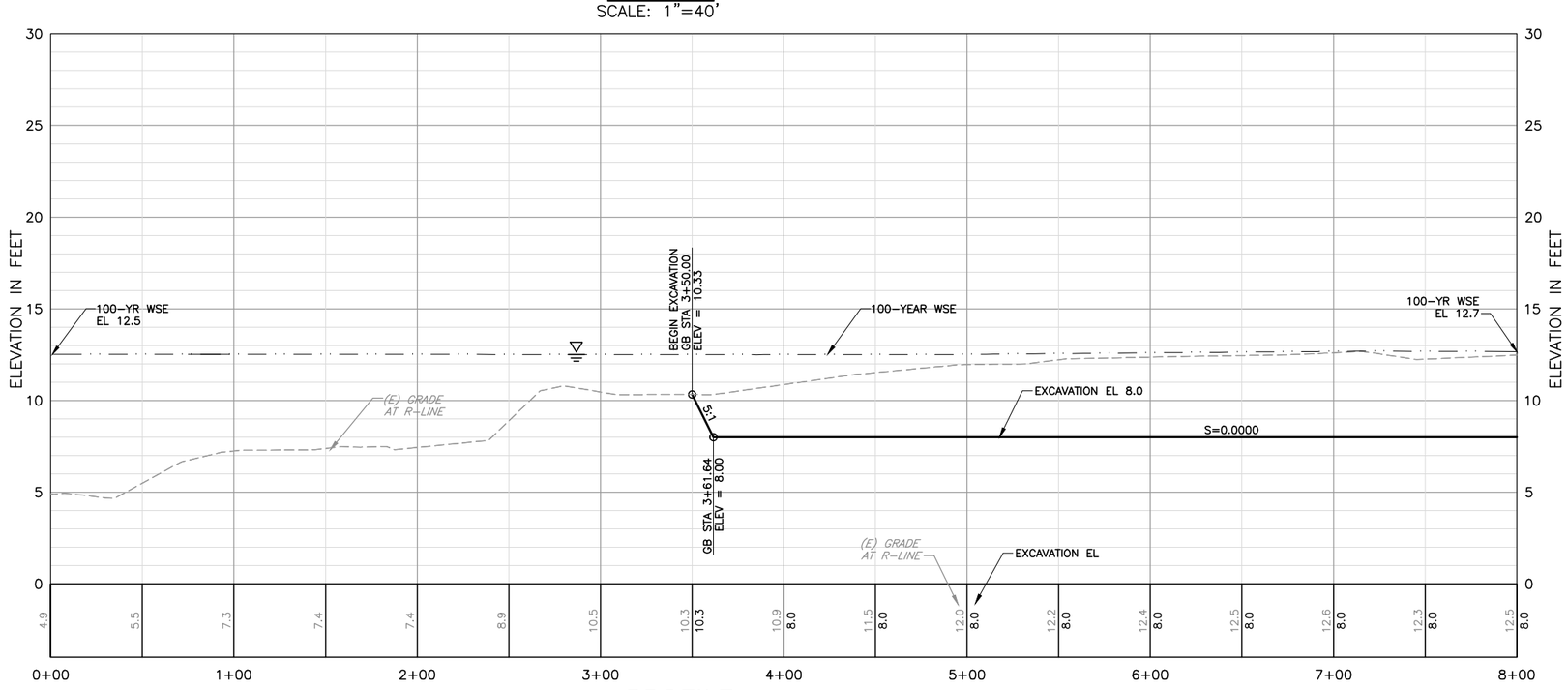

PROFILE

HORIZ: 1"=40'
VERT: 1"=4'

KEY NOTE:

(1) EXISTING TIDAL MARSH AREA, DO NOT DISTURB.

USERNAME: BillShad Tue 08 Jul 2008 09:32am
FILENAME: C:\pwworking\sec\d0171341\C-01

DOCUMENT NUMBER:SFC_LP-C-1028-XXXXXXX

REV	DESCRIPTION	DATE	APPR.

HDR

DATE	ENGINEERING CERTIFICATION
JULY 2015	REGISTERED PROFESSIONAL ENGINEER LANCE M. JONES 085714 Exp. 6/30/11 CIVIL STATE OF CALIFORNIA
DESIGN L. JONES	
DRAWN H. SUAREZ	
CHECKED B. JOHNSON	PROJECT ENGINEER DATE

SAN FRANCISQUITO CREEK JOINT POWERS AUTHORITY

ACCEPTED BY DISTRICT

PROJECT ENGINEER DATE

PROJECT NAME AND SHEET DESCRIPTION:

SAN FRANCISQUITO CREEK FLOOD REDUCTION, ECOSYSTEM RESTORATION, & RECREATION PROJECT

PLAN AND PROFILE - (R-LINE)
STATION 0+00 TO 8+00

SCALE	PROJECT NUMBER
AS SHOWN	26284002
VERIFY SCALES 0 1" BAR IS ONE INCH ON ORIGINAL DRAWING IF NOT ONE INCH ON THIS SHEET, ADJUST SCALES ACCORDINGLY	SHEET CODE: C-1
	SHEET NUMBER: 16 OF 126

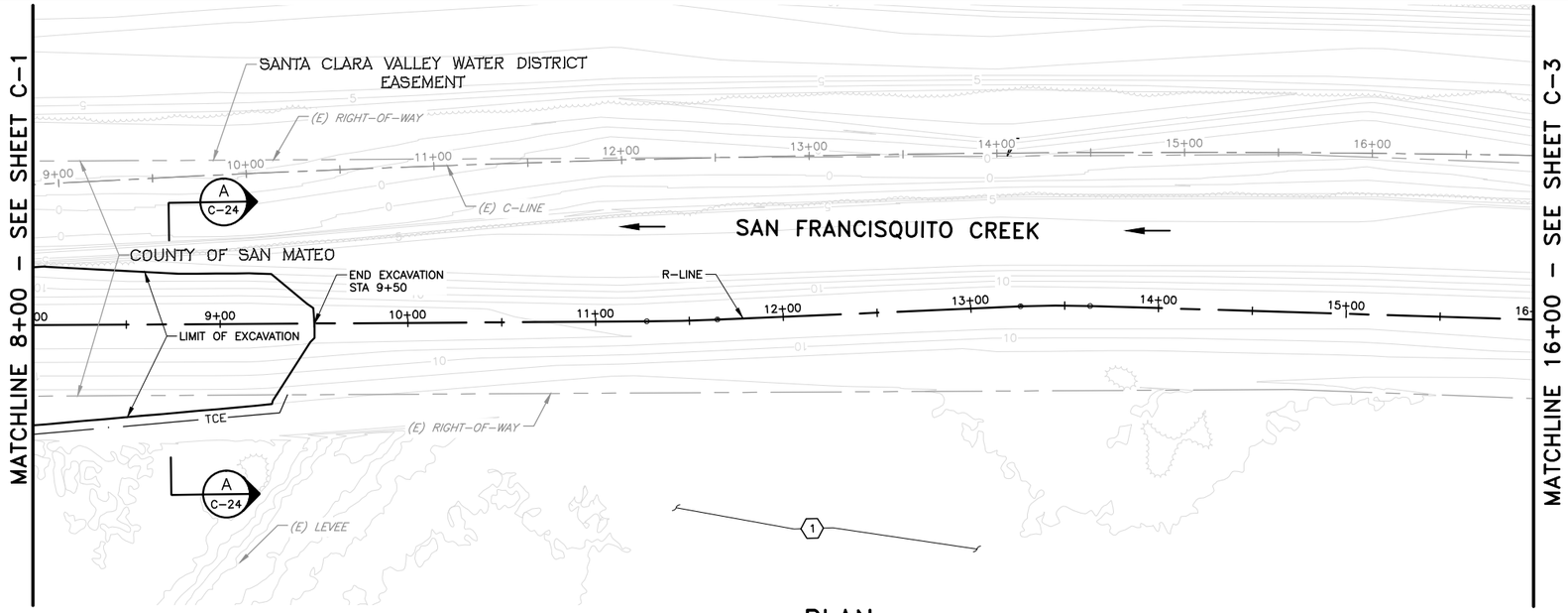

PLAN

SCALE: 1"=40'

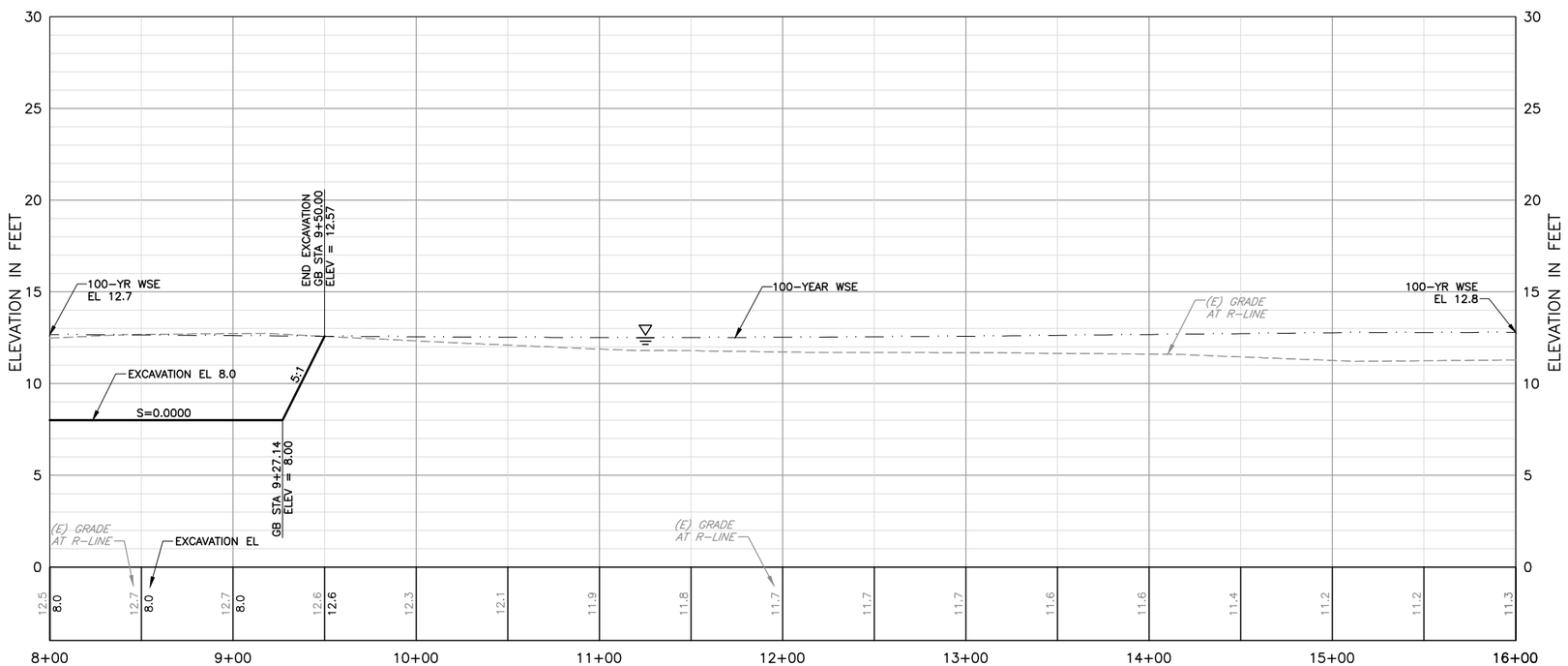

PROFILE

HORIZ: 1"=40'
VERT: 1"=4'

KEY NOTE:

(1) EXISTING TIDAL MARSH AREA, DO NOT DISTURB.

REV	DESCRIPTION	DATE	APPR.

HDR

DATE JULY 2015
DESIGN L. JONES
DRAWN H. SUAREZ
CHECKED P. HRADILEK

ENGINEERING CERTIFICATION
REGISTERED PROFESSIONAL ENGINEER LANCE M. JONES 08574 EXP. 12/31/10 CIVIL STATE OF CALIFORNIA
PROJECT ENGINEER 07-20-10

SAN FRANCISQUITO CREEK JOINT POWERS AUTHORITY

ACCEPTED BY DISTRICT

PROJECT ENGINEER DATE

PROJECT NAME AND SHEET DESCRIPTION:

SAN FRANCISQUITO CREEK FLOOD REDUCTION, ECOSYSTEM RESTORATION, & RECREATION PROJECT

PLAN AND PROFILE – (R-LINE)
STATION 8+00 TO 16+00

SCALE: AS SHOWN

VERIFY SCALES: 0 – 1"
BAR IS ONE INCH ON ORIGINAL DRAWING IF NOT ONE INCH ON THIS SHEET, ADJUST SCALES ACCORDINGLY

PROJECT NUMBER: 26284002

SHEET CODE: C-2

SHEET NUMBER: 17 OF 126

DOCUMENT NUMBER: SFC_LP-C-1028-XXXXXXX

USERNAME: BillShad Tue 08 Jul 2008 09:32am
FILENAME: C:\pwworking\sec\d0171341\C-02

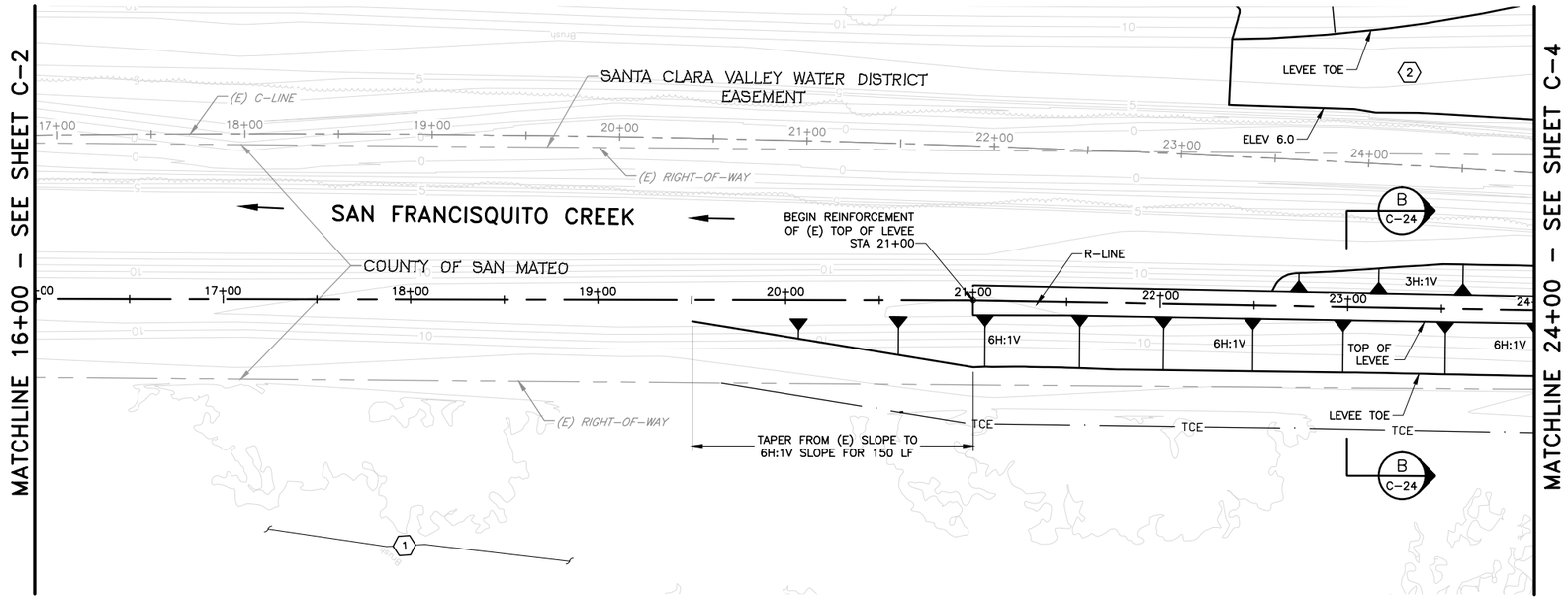

PLAN

SCALE: 1"=40'

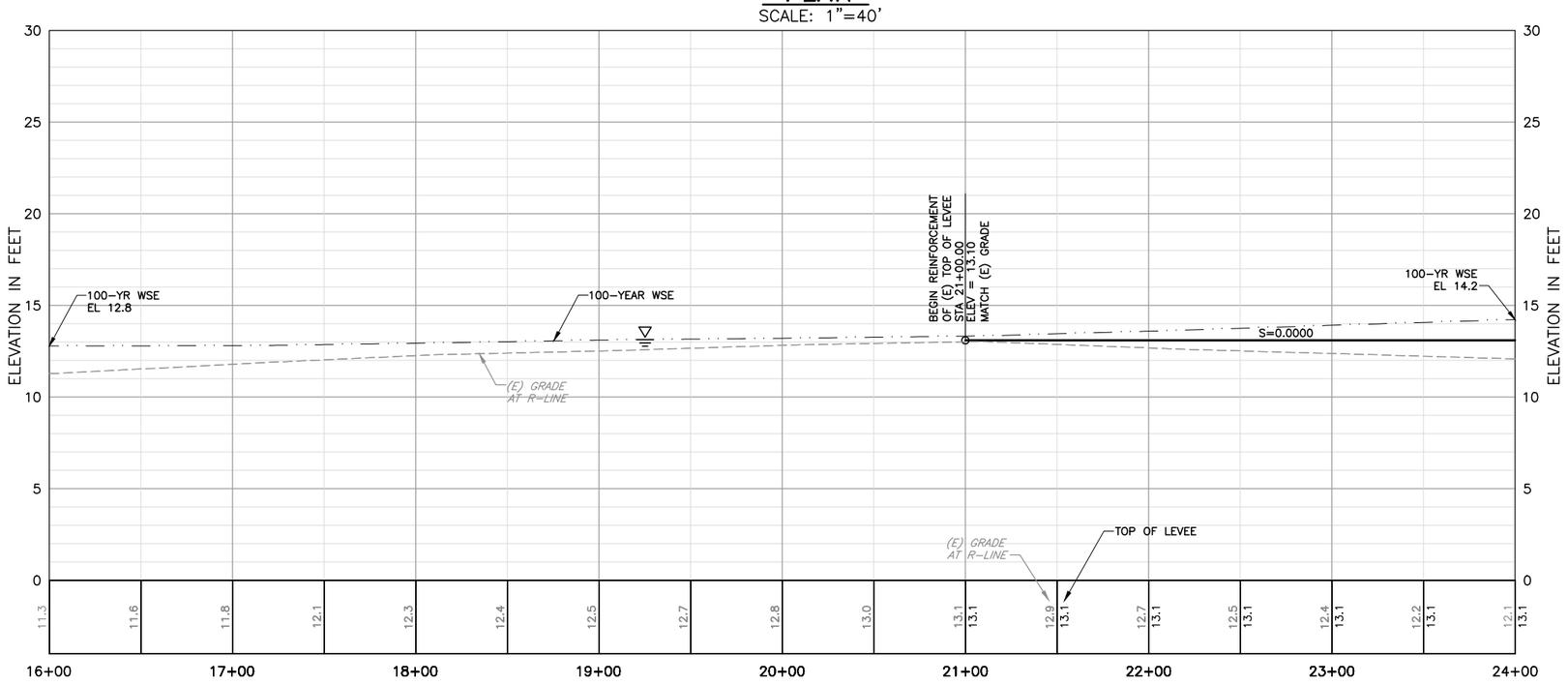

PROFILE

HORIZ: 1"=40'
VERT: 1"=4'

KEY NOTE:

1. EXISTING TIDAL MARSH AREA, DO NOT DISTURB.
2. CONSTRUCT BENCH WITHIN CREEK. SEE SHEET X-6.

REV	DESCRIPTION	DATE	APPR.

HDR

DATE: JULY 2015
DESIGN: L. JONES
DRAWN: H. SUAREZ
CHECKED: P. HRADILEK

ENGINEERING CERTIFICATION
REGISTERED PROFESSIONAL ENGINEER LANCE M. JONES 08574 EXP. 06/17 CIVIL STATE OF CALIFORNIA
PROJECT ENGINEER DATE

SAN FRANCISQUITO CREEK JOINT POWERS AUTHORITY
ACCEPTED BY DISTRICT
PROJECT ENGINEER DATE

PROJECT NAME AND SHEET DESCRIPTION:
SAN FRANCISQUITO CREEK FLOOD REDUCTION, ECOSYSTEM RESTORATION, & RECREATION PROJECT
PLAN AND PROFILE – (R-LINE)
STATION 16+00 TO 24+00

SCALE: AS SHOWN
VERIFY SCALES: 0 1"
BAR IS ONE INCH ON ORIGINAL DRAWING IF NOT ONE INCH ON THIS SHEET, ADJUST SCALES ACCORDINGLY

PROJECT NUMBER: 26284002
SHEET CODE: C-3
SHEET NUMBER: 18 OF 126

DOCUMENT NUMBER: SFC_LP-C-1028-XXXXXXX

USERNAME: BillShad Tue 08 Jul 2008 09:32am
FILENAME: C:\pwworking\sac\d0171341\C-03

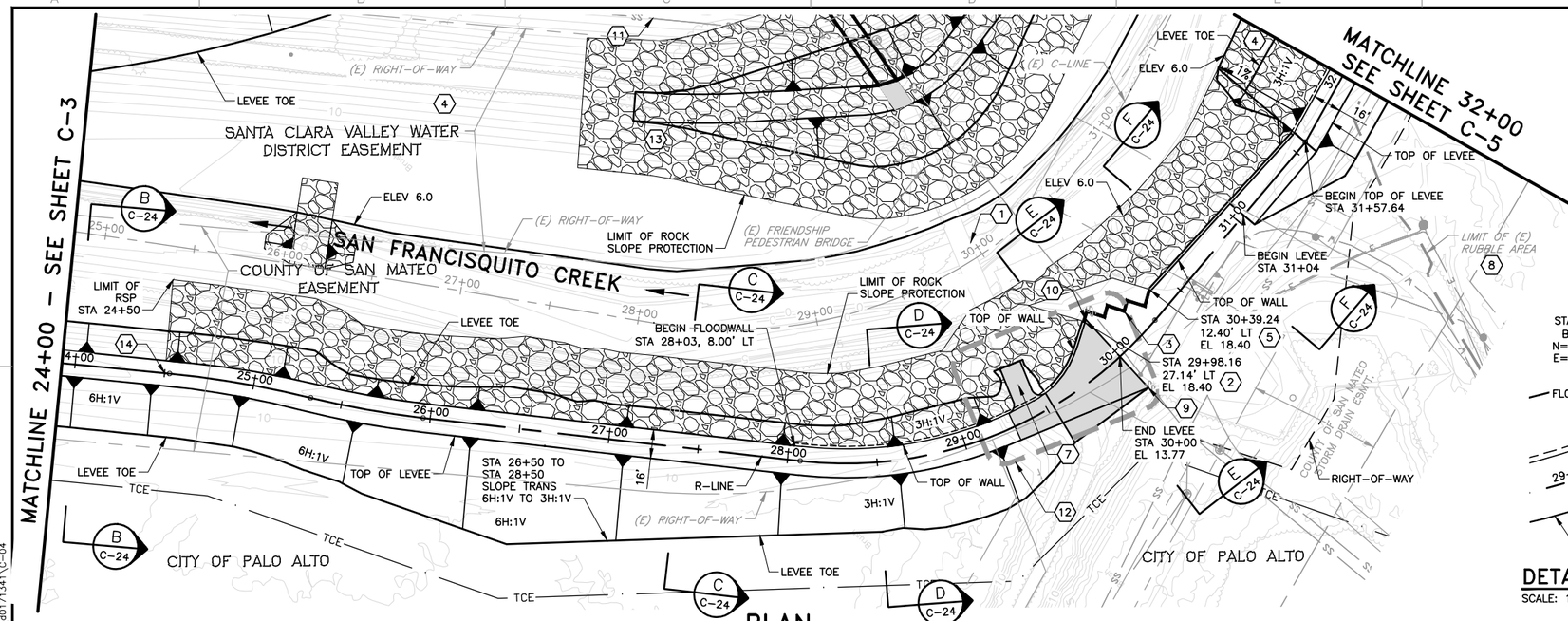

PLAN
SCALE: 1"=40'

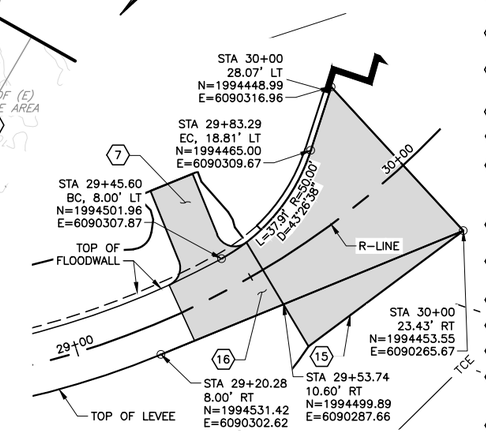

DETAIL B – LEVEE LAYOUT (R-LINE) STA 29+20 TO 30+00
SCALE: 1"=20'

KEY NOTE:

1. CONTRACTOR TO PROTECT IN PLACE EXISTING BRIDGE STRUCTURE. CONTACT THE CITY OF PALO ALTO REGARDING THE OPTION OF REMOVING OR RELOCATING.
2. CONNECT NEW FLOODWALL TO EXISTING HEADWALL PER DETAIL 3 ON SHEET S-3.
3. CONSTRUCT HEADWALL EXTENSION PER SECTION A ON SHEET S-5.
4. CONSTRUCT BENCH WITHIN CREEK. SEE SHEETS X-6 TO X-8.
5. CONNECT NEW FLOODWALL TO EXISTING HEADWALL PER DETAIL 4 ON SHEET S-3.
6. NOT USED.
7. SEE DETAIL 'A' THIS SHEET.
8. EXISTING RUBBLE SHALL BE REMOVED OFF-SITE TO AN APPROPRIATE LANDFILL PER CONTRACT SPECIFICATIONS. CONTRACTOR SHALL VERIFY EXTENTS OF RUBBLE IN THE FIELD.
9. END LEVEE STA 30+00, 23.43' RT, EL 13.3 – MATCH (E) GRADE
10. END LEVEE STA 30+00, 28.07' LT, EL 13.6 – MATCH (E) GRADE
11. REMOVE (E) SS LINE. SEE SHEET C-42.
12. SEE DETAIL 'B' THIS SHEEET.
13. SEE SHEET C-20 FOR DESIGN OF ISLAND.
14. STA 24+50 END LEVEE REINFORCEMENT OF (E) TOP OF LEVEE BEGIN NEW TOP OF LEVEE.
15. MATCH (EX) GRADE.
16. 6" AC PAVING OVER COMPACTED LEVEE FILL.

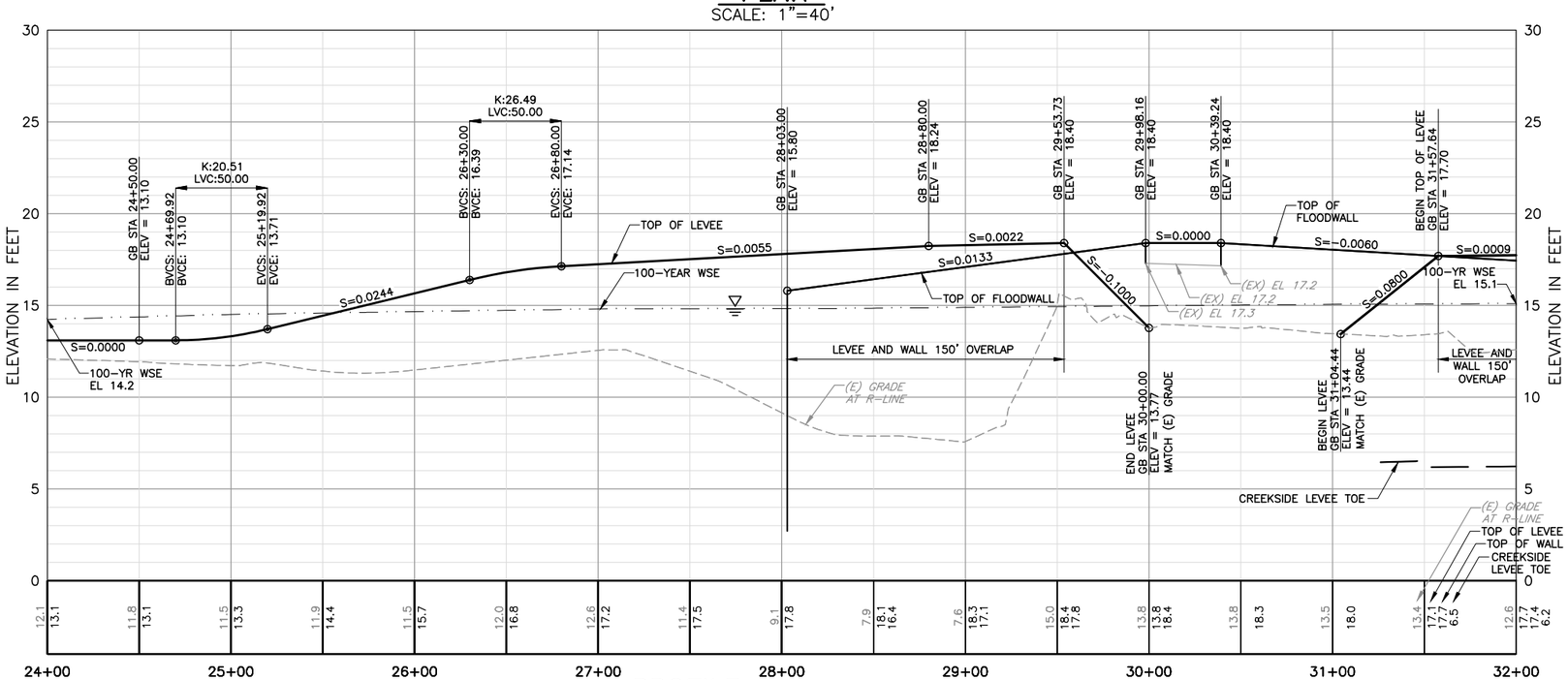

PROFILE
HORIZ: 1"=40'
VERT: 1"=4'

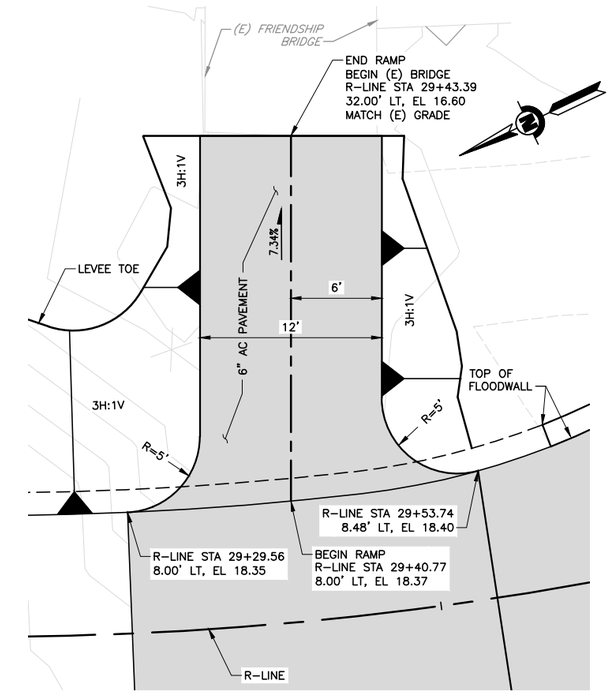

DETAIL A – RAMP TO FRIENDSHIP BRIDGE
SCALE: 1"=5'

REV	DESCRIPTION	DATE	APPR.

HDR

DATE JULY 2015
DESIGN L. JONES
DRAWN H. SUAREZ
CHECKED P. HRADILEK

ENGINEERING CERTIFICATION
REGISTERED PROFESSIONAL ENGINEER LANCE M. JONES 68574 EXP. 6/30/17 CIVIL STATE OF CALIFORNIA
PROJECT ENGINEER DATE

SAN FRANCISQUITO CREEK JOINT POWERS AUTHORITY
ACCEPTED BY DISTRICT
PROJECT ENGINEER DATE

PROJECT NAME AND SHEET DESCRIPTION:
SAN FRANCISQUITO CREEK FLOOD REDUCTION, ECOSYSTEM RESTORATION, & RECREATION PROJECT
PLAN AND PROFILE – (R-LINE)
STATION 24+00 TO 32+00

SCALE: AS SHOWN
VERIFY SCALES: 0 1" BAR IS ONE INCH ON ORIGINAL DRAWING IF NOT ONE INCH ON THIS SHEET, ADJUST SCALES ACCORDINGLY
PROJECT NUMBER: 26284002
SHEET CODE: C-4
SHEET NUMBER: 19 OF 126

DOCUMENT NUMBER: SFC_LP-C-1028-XXXXXXX
USERNAME: BillShad Tue 08 Jul 2008 09:32am
FILENAME: C:\pwworking\sec\d0171341\C-04

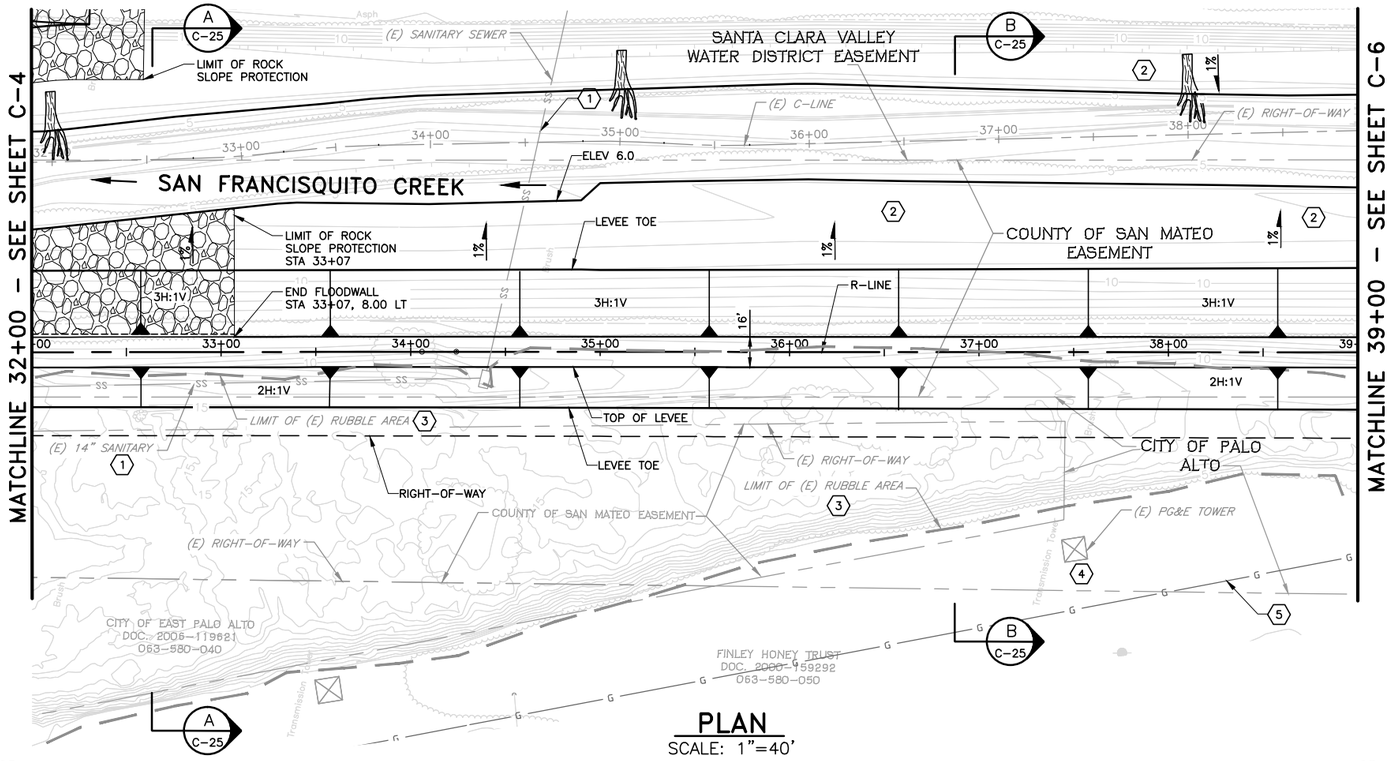

PLAN
SCALE: 1"=40'

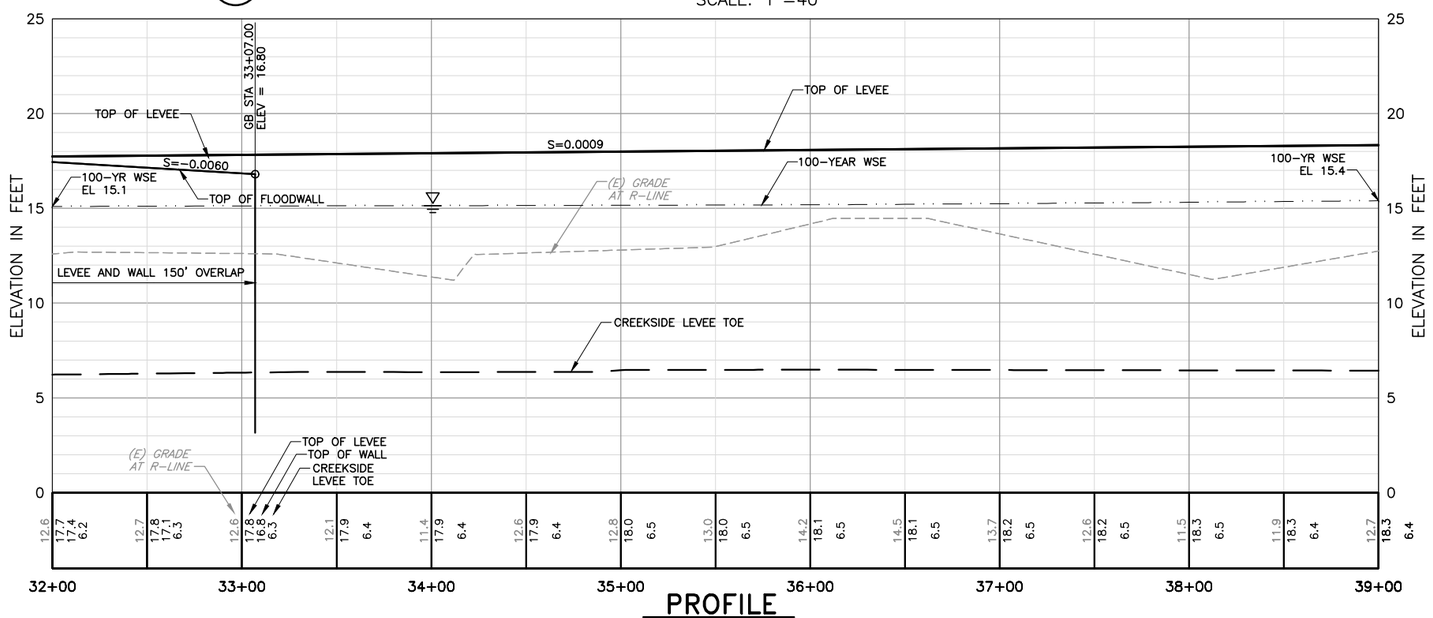

PROFILE
HORIZ: 1"=40'
VERT: 1"=4'

KEY NOTE:

1. REMOVE AND DISPOSE OF EXISTING ABANDONED 14" SS LINE. SEE SHEET C-43.
2. CONSTRUCT BENCH WITHIN CREEK. SEE SHEETS X-8 TO X-9.
3. EXISTING RUBBLE SHALL BE REMOVED OFF-SITE TO AN APPROPRIATE LANDFILL PER CONTRACT SPECIFICATIONS. CONTRACTOR SHALL VERIFY EXTENTS OF RUBBLE IN THE FIELD.
4. PROTECT EXISTING TOWER.
5. CONTRACTOR TO REMOVE EXISTING ABANDONED GAS MAIN. SEE SHEET C-44.

REV	DESCRIPTION	DATE	APPR.

HDR

DATE JULY 2015
DESIGN L. JONES
DRAWN H. SUAREZ
CHECKED P. HRADILEK

ENGINEERING CERTIFICATION
REGISTERED PROFESSIONAL ENGINEER LANCE M. JONES 08574 EXP. 12/31/17 CIVIL STATE OF CALIFORNIA
PROJECT ENGINEER DATE

SAN FRANCISQUITO CREEK JOINT POWERS AUTHORITY
ACCEPTED BY DISTRICT
PROJECT ENGINEER DATE

PROJECT NAME AND SHEET DESCRIPTION:
SAN FRANCISQUITO CREEK FLOOD REDUCTION, ECOSYSTEM RESTORATION, & RECREATION PROJECT
PLAN AND PROFILE – (R-LINE)
STATION 32+00 TO 39+00

SCALE: AS SHOWN
VERIFY SCALES: 0 1" BAR IS ONE INCH ON ORIGINAL DRAWING IF NOT ONE INCH ON THIS SHEET, ADJUST SCALES ACCORDINGLY
PROJECT NUMBER: 26284002
SHEET CODE: C-5
SHEET NUMBER: 20 OF 126

DOCUMENT NUMBER: SFC_LP-C-1028-XXXXXX
USERNAME: BillShad Tue 08 Jul 2008 09:32am
FILENAME: C:\pwworking\sec\d0171341\C-05

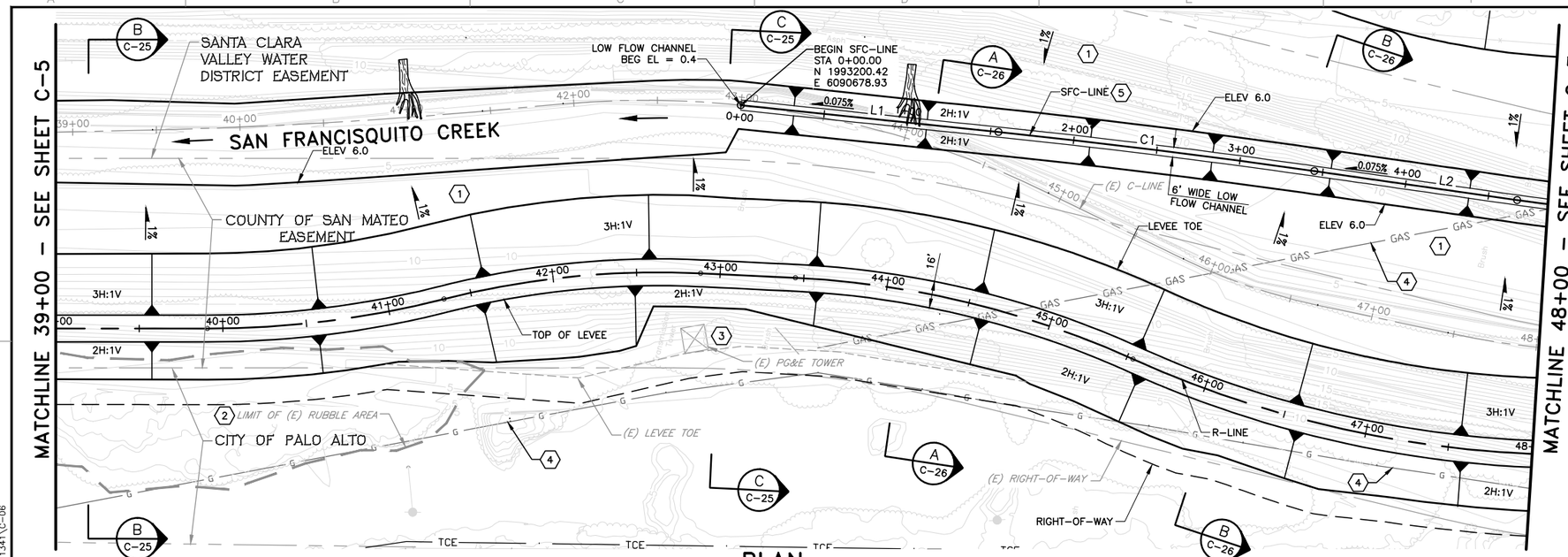

PLAN
SCALE: 1"=40'

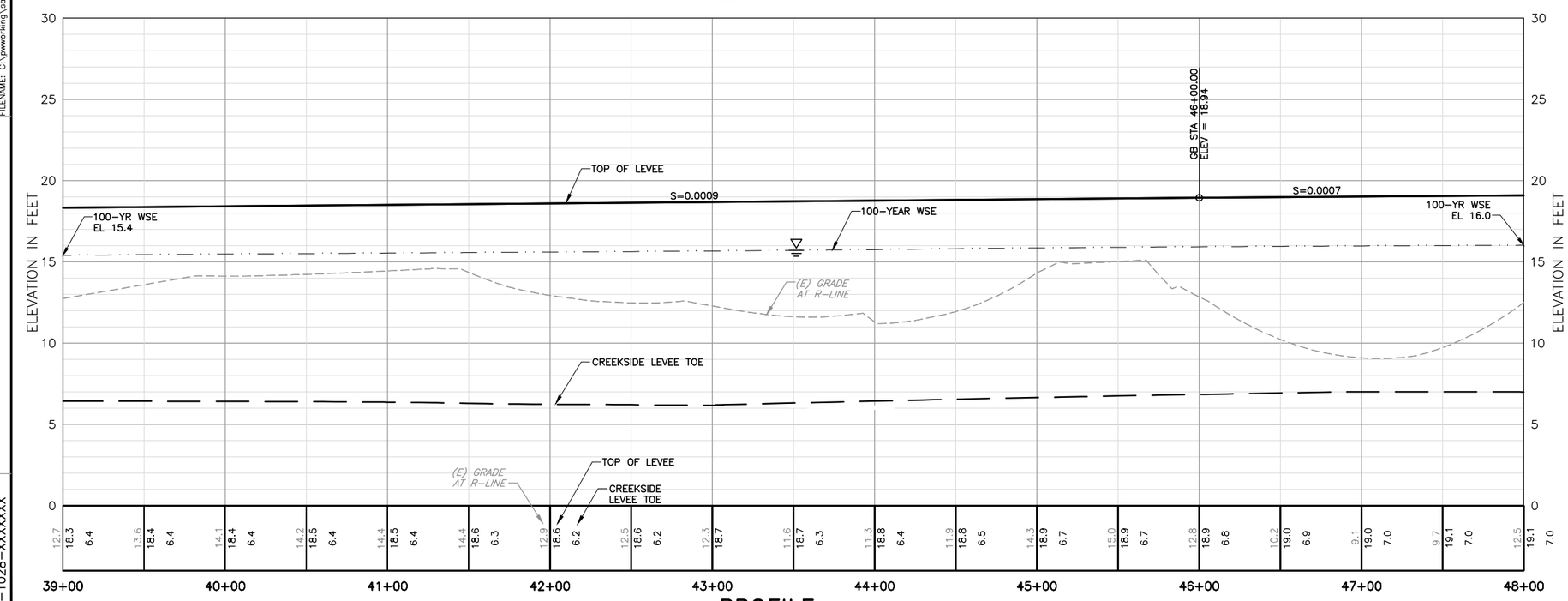

PROFILE
HORIZ: 1"=40'
VERT: 1"=4'

KEY NOTE:

1. CONSTRUCT BENCH WITHIN CREEK. SEE SHEETS X-10 TO X-12.
2. EXISTING RUBBLE SHALL BE HAULED OFF-SITE FOR APPROPRIATE DISPOSAL PER CONTRACT SPECIFICATIONS. CONTRACTOR SHALL VERIFY EXTENTS OF RUBBLE IN THE FIELD.
3. PROTECT EXISTING TOWER.
4. CONTRACTOR TO REMOVE EXISTING ABANDONED GAS MAIN. SEE SHEET C-44.
5. SEE SHEETS X-11 THRU X-13 FOR RE-ALIGNMENT OF LOW FLOW CHANNEL.

SFC-LINE ALIGNMENT LINE AND CURVE TABLE

NUMBER	START STA	END STA	CURVE PI	LENGTH	DELTA	RADIUS	LINE/CHORD BRNG
L1	0+00.00	1+54.81	N/A	154.81'	N/A	N/A	S6°53'28"E
C1	1+54.81	3+44.93	2+49.88	190.12'	2°10'43"	5000.00'	S5°48'07"E
L2	3+44.93	4+67.36	N/A	122.43'	N/A	N/A	S4°42'45"E
C2	4+67.36	7+97.75	6+34.07	330.39'	18°55'49"	1000.00'	S14°10'40"E
L3	7+97.75	10+61.56	N/A	263.81'	N/A	N/A	S23°38'34"E

REV	DESCRIPTION	DATE	APPR.

DATE: JULY 2015
DESIGN: L. JONES
DRAWN: H. SUAREZ
CHECKED: P. HRADILEK

ENGINEERING CERTIFICATION
REGISTERED PROFESSIONAL ENGINEER LANCE M. JONES 06574 Exp. 6/30/17 CIVIL STATE OF CALIFORNIA
PROJECT ENGINEER DATE

SAN FRANCISQUITO CREEK JOINT POWERS AUTHORITY
ACCEPTED BY DISTRICT
PROJECT ENGINEER DATE

PROJECT NAME AND SHEET DESCRIPTION:
SAN FRANCISQUITO CREEK FLOOD REDUCTION, ECOSYSTEM RESTORATION, & RECREATION PROJECT
PLAN AND PROFILE – (R-LINE)
STATION 39+00 TO 48+00

SCALE: AS SHOWN
VERIFY SCALES: 0 1" BAR IS ONE INCH ON ORIGINAL DRAWING IF NOT ONE INCH ON THIS SHEET, ADJUST SCALES ACCORDINGLY
PROJECT NUMBER: 26284002
SHEET CODE: C-6
SHEET NUMBER: 21 OF 126

DOCUMENT NUMBER: SFC_LP-C-1028-XXXXXX

USERNAME: BillShad Tue 08 Jul 2008 09:32am
FILENAME: C:\pwworking\sac\d0171341\C-06

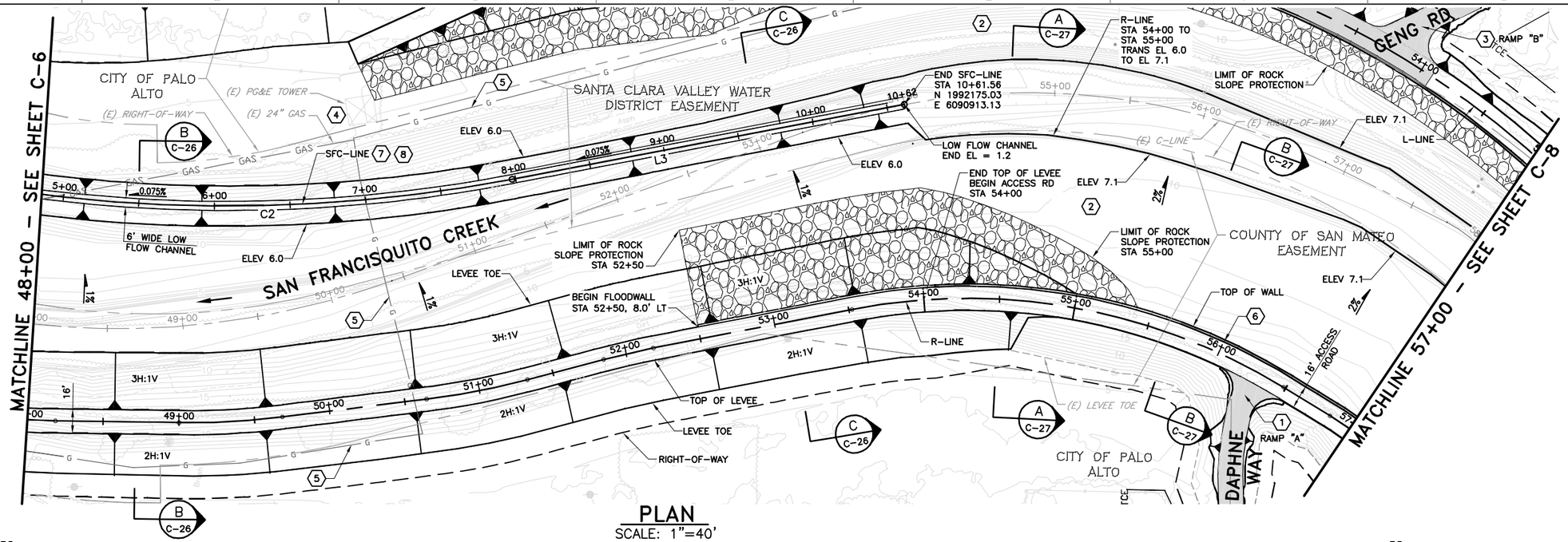

PLAN

SCALE: 1"=40'

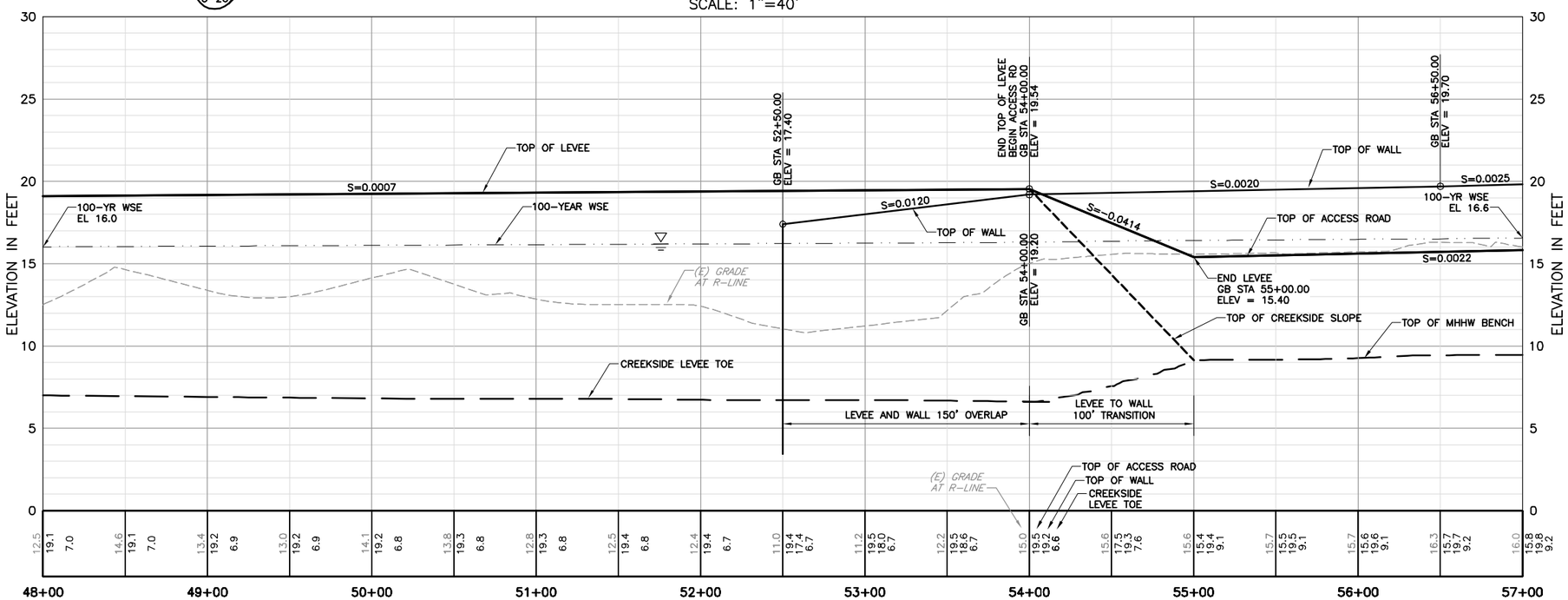

PROFILE

HORIZ: 1"=40'
VERT: 1"=4'

KEY NOTE:

1. SEE SHEET C-18 FOR DAPHNE WAY ACCESS RAMP DETAILS.
2. CONSTRUCT BENCH WITHIN CREEK. SEE SHEETS X-12 TO X-14.
3. SEE SHEET C-18 FOR GENG ROAD ACCESS RAMP DETAILS.
4. EXISTING PG&E TOWER IS TO BE RELOCATED BY PG&E. CONTRACTOR SHALL LOCATE AND PROTECT THE NEW TOWER.
5. CONTRACTOR TO REMOVE EXISTING ABANDONED GAS MAIN. SEE SHEET C-44.
6. DUE TO LOW OHE AT THIS LOCATION, CONTRACTOR MAY CHOOSE TO CUT SHEET PILES DURING CONSTRUCTION. SHEET PILE WELDING SPLICE DETAIL IS SHOWN ON SHEET S-1.
7. SEE SHEETS X-11 TO X-13 FOR RE-ALIGNMENT OF LOW FLOW CHANNEL.
8. SEE SHEET C-6 FOR SFC-LINE ALIGNMENT LINE AND CURVE TABLE.

REV	DESCRIPTION	DATE	APPR.

DATE: JULY 2015
DESIGN: L. JONES
DRAWN: H. SUAREZ
CHECKED: P. HRADILEK

ENGINEERING CERTIFICATION
REGISTERED PROFESSIONAL ENGINEER LANCE M. JONES 065724 Exp. 6/30/16 CIVIL STATE OF CALIFORNIA
PROJECT ENGINEER DATE

AUTHORITY
SAN FRANCISQUITO CREEK
ACCEPTED BY DISTRICT
PROJECT ENGINEER DATE

PROJECT NAME AND SHEET DESCRIPTION:
SAN FRANCISQUITO CREEK FLOOD REDUCTION, ECOSYSTEM RESTORATION, & RECREATION PROJECT
PLAN AND PROFILE – (R-LINE) STATION 48+00 TO 57+00

SCALE: AS SHOWN
VERIFY SCALES: 0 1"
BAR IS ONE INCH ON ORIGINAL DRAWING IF NOT ONE INCH ON THIS SHEET, ADJUST SCALES ACCORDINGLY

PROJECT NUMBER: 26284002
SHEET CODE: C-7
SHEET NUMBER: 22 OF 126

DOCUMENT NUMBER: SFC_LP-C-1028-XXXXXXX

USERNAME: BillShad Tue 08 Jul 2008 09:32am
FILENAME: C:\pwworking\sac\d0171341\C-07

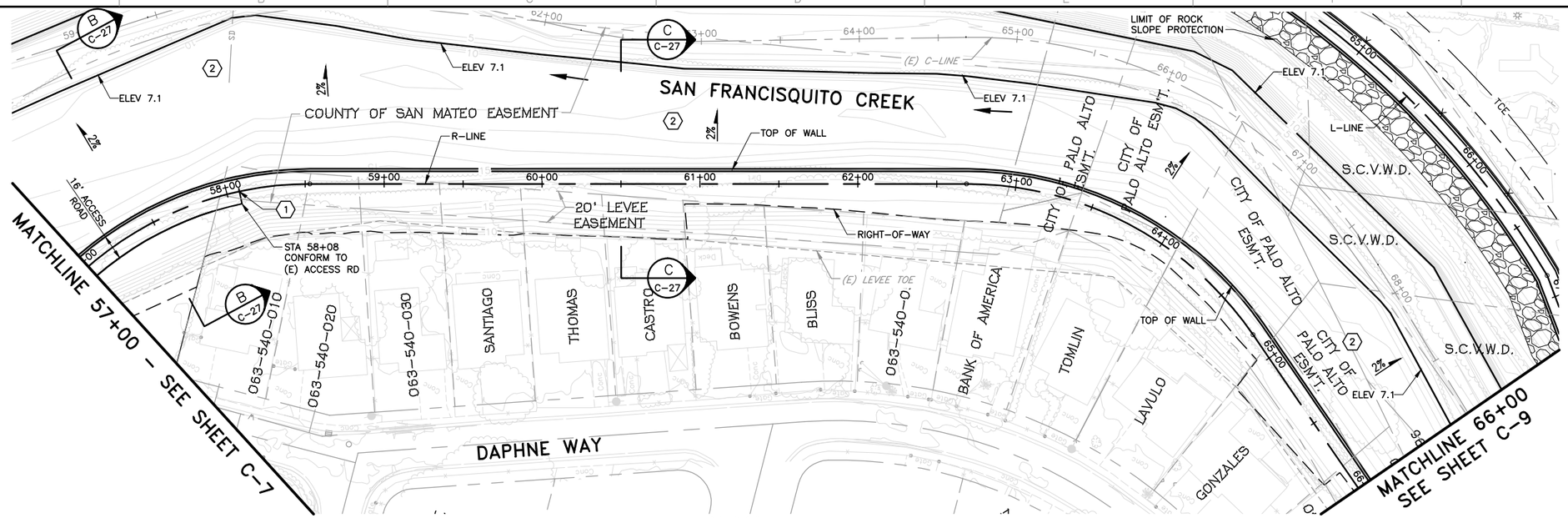

PLAN

SCALE: 1"=40'

KEY NOTE:

1. TIE NEW ACCESS ROAD INTO EXISTING 12' ACCESS ROAD AT LANDSIDE CROWN HINGE POINT.
2. CONSTRUCT BENCH WITHIN CREEK. SEE SHEETS X-15 TO X-17.

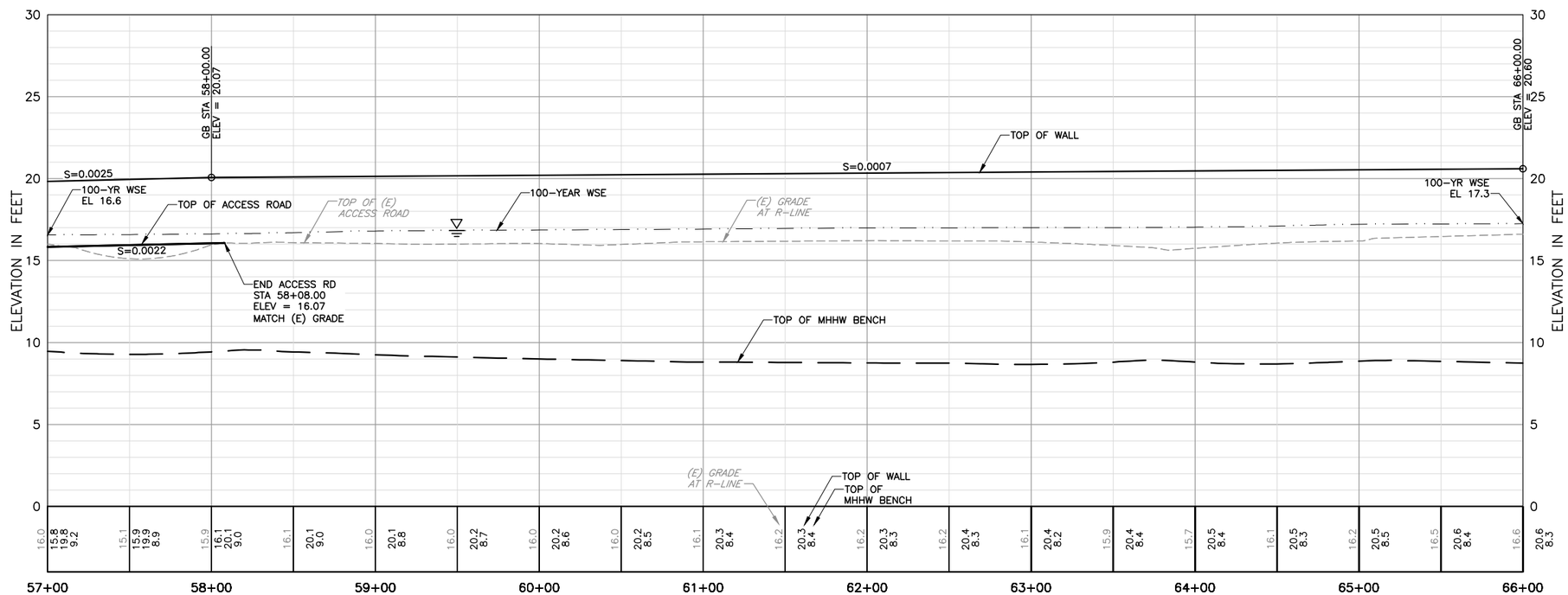

PROFILE

HORIZ: 1"=40'
VERT: 1"=4'

REV	DESCRIPTION	DATE	APPR.

DATE: JULY 2015
DESIGN: L. JONES
DRAWN: H. SUAREZ
CHECKED: P. HRADILEK

ENGINEERING CERTIFICATION
REGISTERED PROFESSIONAL ENGINEER LANCE M. JONES C 68574 EXP. 12/31/17 CIVIL STATE OF CALIFORNIA
PROJECT ENGINEER DATE

SAN FRANCISQUITO CREEK JOINT POWERS AUTHORITY
ACCEPTED BY DISTRICT
PROJECT ENGINEER DATE

PROJECT NAME AND SHEET DESCRIPTION:
SAN FRANCISQUITO CREEK FLOOD REDUCTION, ECOSYSTEM RESTORATION, & RECREATION PROJECT
PLAN AND PROFILE – (R-LINE)
STATION 57+00 TO 66+00

SCALE: AS SHOWN
VERIFY SCALES: 0 1"
BAR IS ONE INCH ON ORIGINAL DRAWING IF NOT ONE INCH ON THIS SHEET, ADJUST SCALES ACCORDINGLY

PROJECT NUMBER: 26284002
SHEET CODE: C-8
SHEET NUMBER: 23 OF 126

DOCUMENT NUMBER: SFC_LP-C-1028-XXXXXX

USERNAME: BillShad Tue 08 Jul 2008 09:32am
FILENAME: C:\pwworking\sec\d0171341\C-08

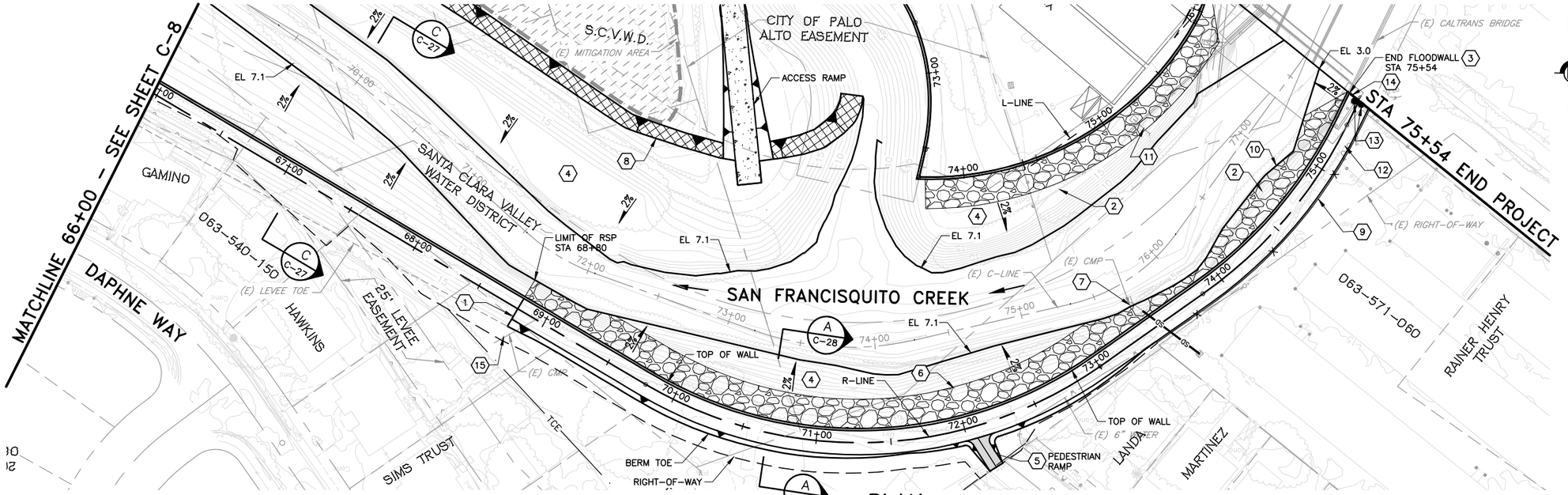

PLAN

SCALE: 1"=40'

KEY NOTE:

1. TIE NEW ACCESS ROAD INTO EXISTING 16' ACCESS ROAD AT LANDSIDE CROWN HINGE POINT, STA 68+80.
2. REMOVE AND DISPOSE OF EXISTING RETAINING WALL STRUCTURE.
3. END FLOODWALL AT EXISTING BRIDGE STRUCTURE PER DETAIL 2 ON SHEET S-1.
4. CONSTRUCT BENCH WITHIN CREEK. SEE SHEETS X-17 TO X-19.
5. CONSTRUCT PEDESTRIAN RAMP FOR VERBENA DRIVE PER DETAIL ON SHEET C-20.
6. LIMIT OF ROCK SLOPE PROTECTION.
7. CONSTRUCT STORM DRAIN CROSSING PER DETAIL 'C' SHOWN ON SHEET C-48.
8. LIMIT OF TRM PROTECTION.
9. CONSTRUCT 9' SECURITY FENCE PER DETAIL 1 ON SHEET C-48 FROM R-LINE STA 73+40 TO IRON FENCE. OFFSET 1' FROM ACCESS ROAD.
10. TRANSITION DAYLIGHT FROM EL 7.1 TO EL 3.0 FROM R-LINE STA 74+00 TO STA 75+54.
11. REMOVE AND DISPOSE OF (E) SD AND INLET.
12. REMOVE AND REPLACE (E) IRON FENCE, FLAGS, SIGNS, AND TRASH ENCLOSURE.
13. STA 75+53 INSTALL FOLDABLE BOLLARDS PER DETAIL 2 ON SHEET C-34. CENTER OF BOLLARD IS OFFSET 2.5' FROM R-LINE.
14. CONSTRUCT CURB RAMP PER COUNTY OF SAN MATEO STANDARD DRAWING D-1.
15. REMOVE AND DISPOSE OF (E) SD LINE, CAP AT R/W.

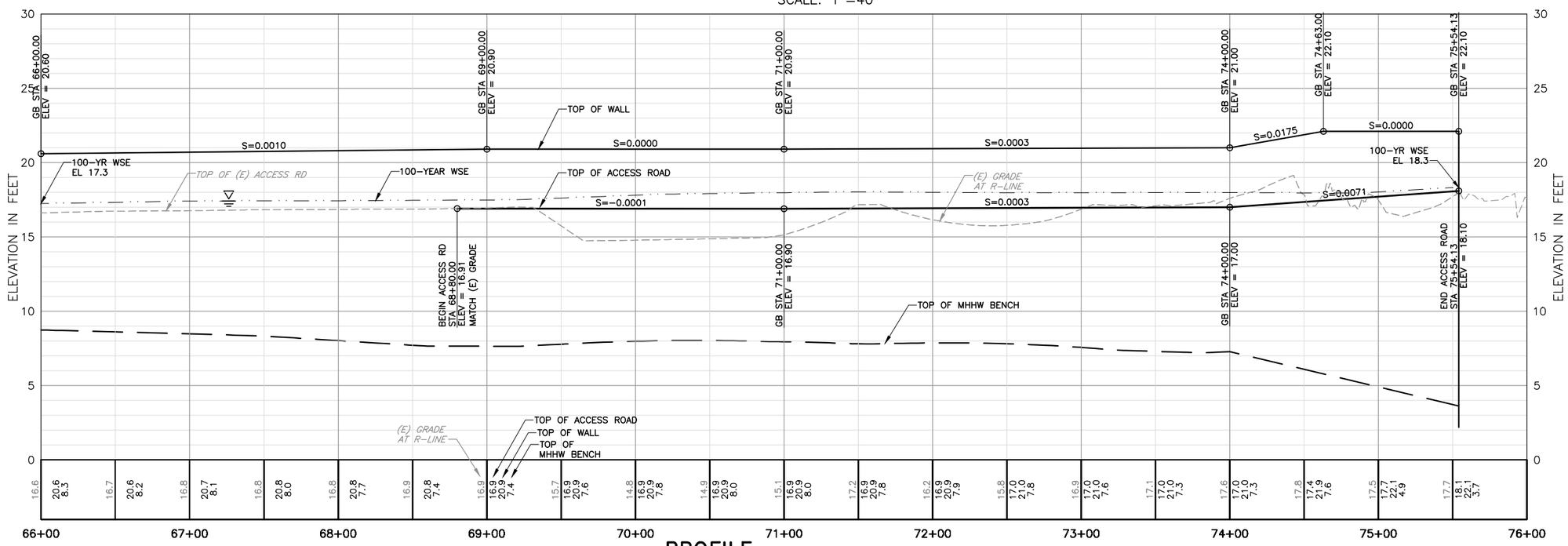

PROFILE

HORIZ: 1"=40'
VERT: 1"=4'

REV	DESCRIPTION	DATE	APPR.

HDR

DATE	ENGINEERING CERTIFICATION
JULY 2015	REGISTERED PROFESSIONAL ENGINEER LANCE M. JONES C-85744 Exp. 6/30/17 CIVIL STATE OF CALIFORNIA
DESIGN: L. JONES	
DRAWN: H. SUAREZ	
CHECKED: P. HRADILEK	PROJECT ENGINEER DATE

SAN FRANCISQUITO CREEK JOINT POWERS AUTHORITY

ACCEPTED BY DISTRICT

PROJECT ENGINEER DATE

PROJECT NAME AND SHEET DESCRIPTION:

SAN FRANCISQUITO CREEK FLOOD REDUCTION, ECOSYSTEM RESTORATION, & RECREATION PROJECT

PLAN AND PROFILE – (R-LINE)
STATION 66+00 TO 75+54

SCALE	PROJECT NUMBER
AS SHOWN	26284002
VERIFY SCALES 0 1" BAR IS ONE INCH ON ORIGINAL DRAWING IF NOT ONE INCH ON THIS SHEET, ADJUST SCALES ACCORDINGLY	SHEET CODE: C-9
	SHEET NUMBER: 24 OF 126

DOCUMENT NUMBER: SFC_LP-C-1028-XXXXXXX

USERNAME: BillShad Tue 08 Jul 2008 09:32am
FILENAME: C:\pwworking\sac\d0171341\C-09

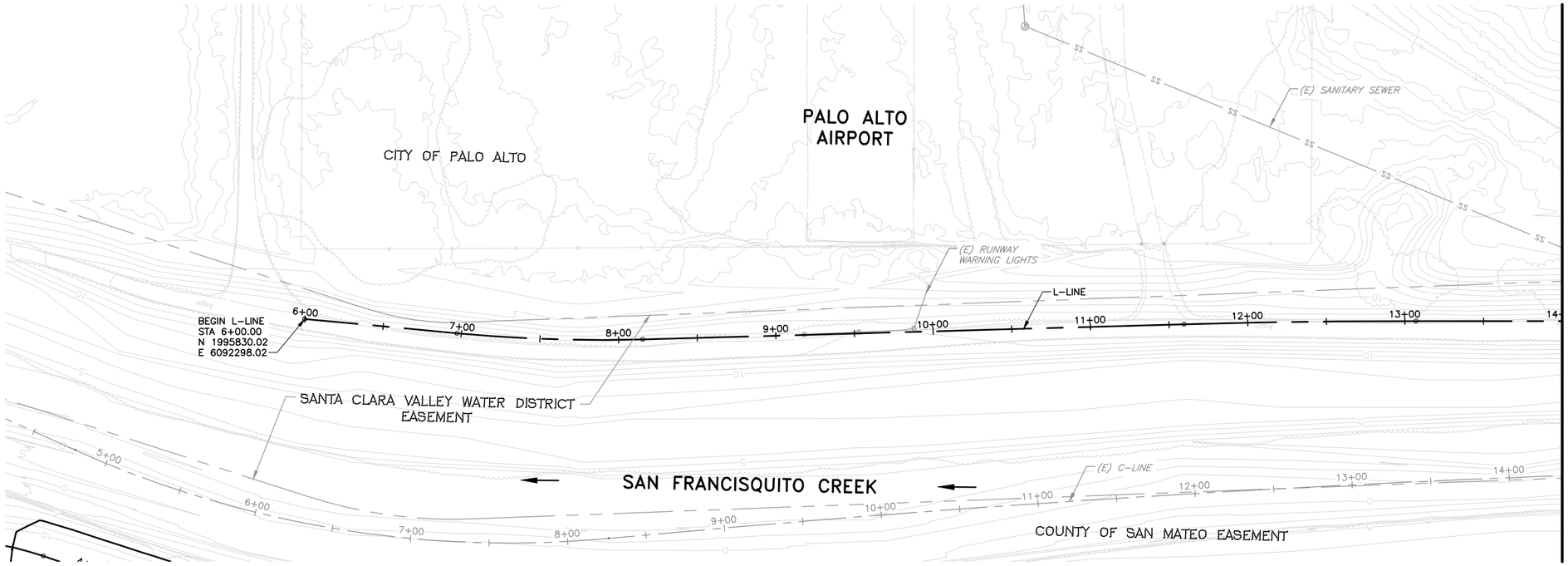

PLAN
SCALE: 1"=40'

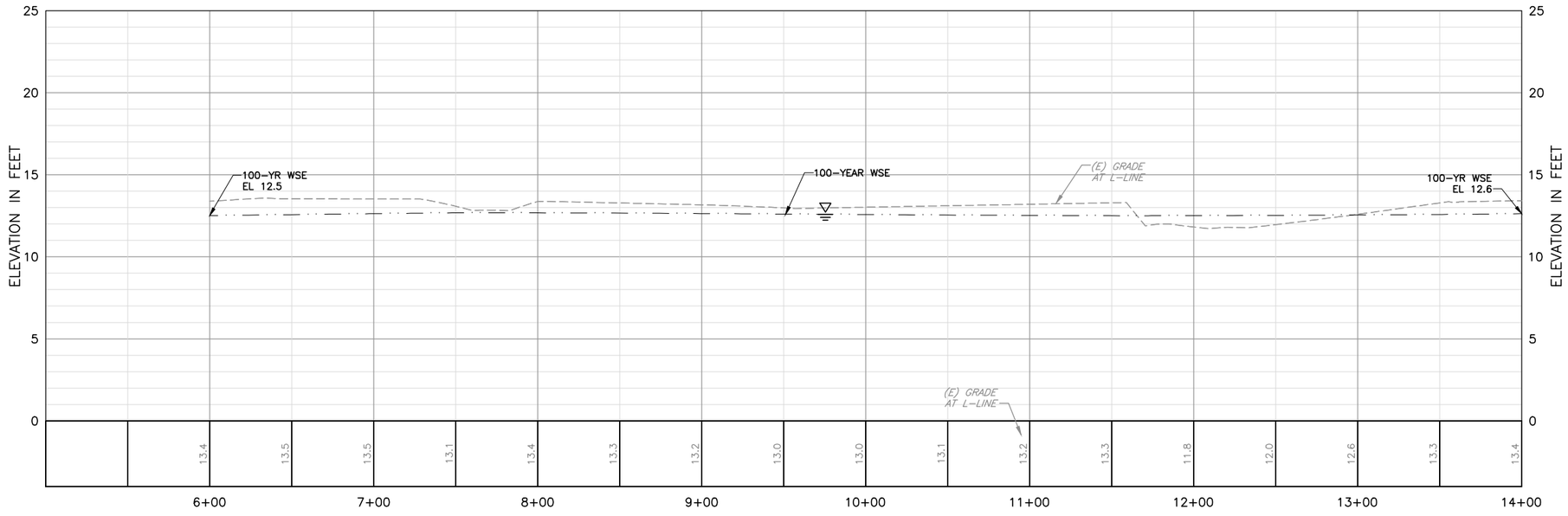

PROFILE
HORIZ: 1"=40'
VERT: 1"=4'

REV	DESCRIPTION	DATE	APPR.

HDR

DATE	JULY 2015
DESIGN	L. JONES
DRAWN	H. SUAREZ
CHECKED	P. HRADILEK

ENGINEERING CERTIFICATION
REGISTERED PROFESSIONAL ENGINEER LANCE M. JONES 085744 Exp. 6/30/17 CIVIL STATE OF CALIFORNIA
PROJECT ENGINEER DATE

SAN FRANCISQUITO CREEK
JOINT POWERS AUTHORITY
ACCEPTED BY DISTRICT
PROJECT ENGINEER DATE

PROJECT NAME AND SHEET DESCRIPTION:
SAN FRANCISQUITO CREEK FLOOD REDUCTION, ECOSYSTEM RESTORATION, & RECREATION PROJECT
PLAN AND PROFILE – (L-LINE)
STATION 6+00 TO 14+00

SCALE	PROJECT NUMBER
AS SHOWN	26284002
VERIFY SCALES 0 1" BAR IS ONE INCH ON ORIGINAL DRAWING IF NOT ONE INCH ON THIS SHEET, ADJUST SCALES ACCORDINGLY	SHEET CODE: C-10
	SHEET NUMBER: 25 OF 126

DOCUMENT NUMBER: SFC_LP-C-1028-XXXXXXX

USERNAME: BillShad Tue 08 Jul 2008 09:32am
FILENAME: C:\pwworking\sec\d0171341\C-10

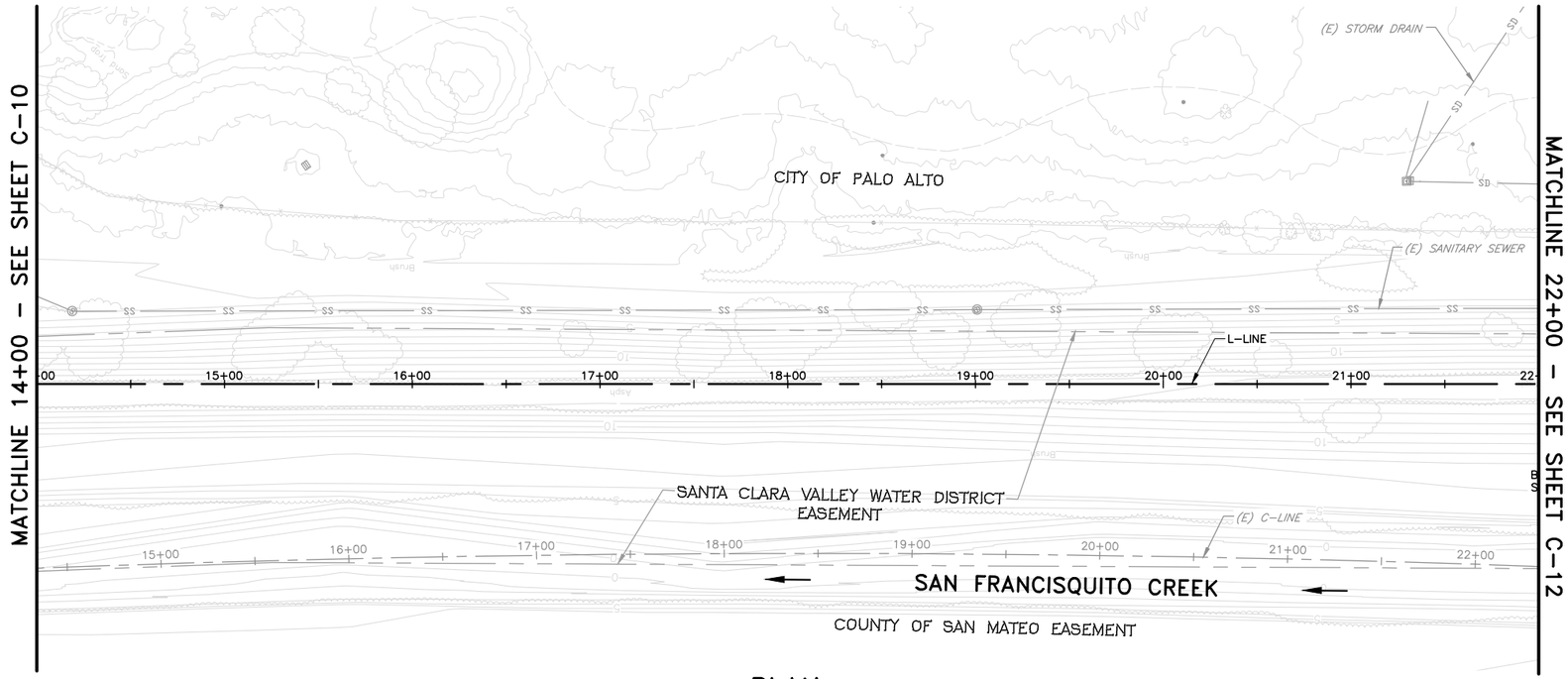

PLAN

SCALE: 1"=40'

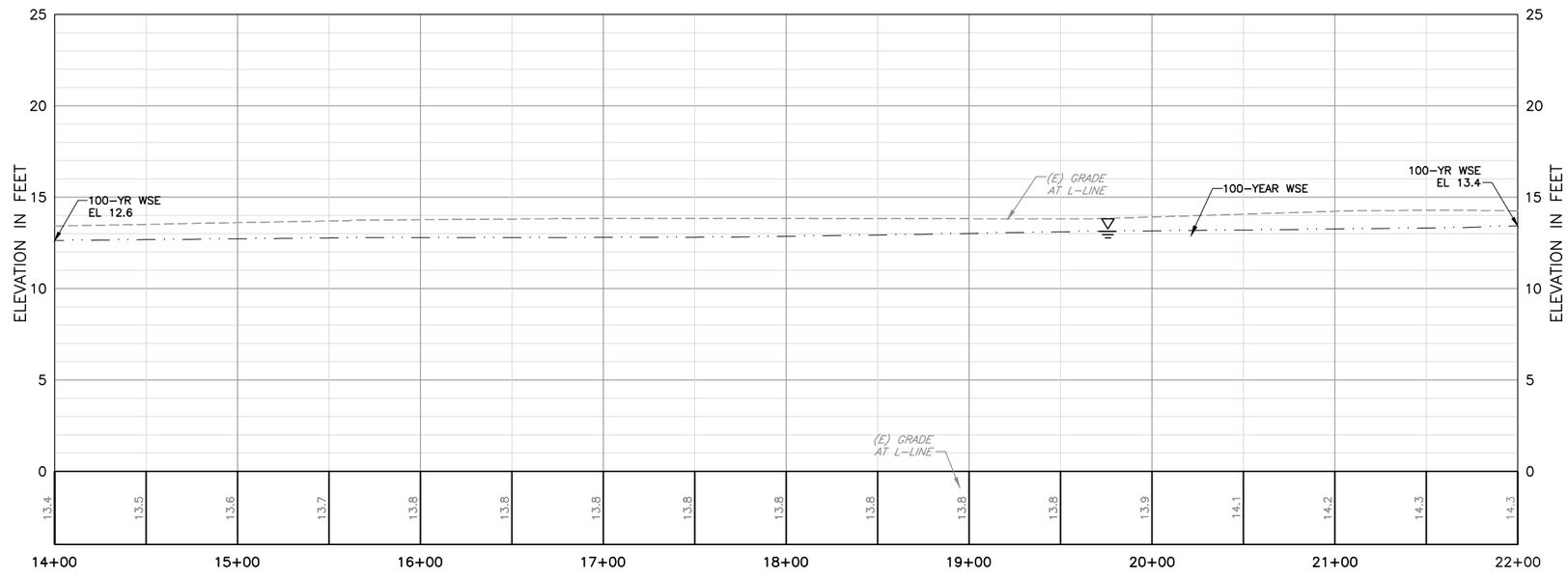

PROFILE

HORIZ: 1"=40'
VERT: 1"=4'

REV	DESCRIPTION	DATE	APPR.

DOCUMENT NUMBER: SFC_LP-C-1028-XXXXXXX

USERNAME: BillShad Tue 08 Jul 2008 09:32am
FILENAME: C:\pwworking\sac\d0171341\C-11

HDR

DATE	JULY 2015
DESIGN	L. JONES
DRAWN	H. SUAREZ
CHECKED	P. HRADILEK

ENGINEERING CERTIFICATION

REGISTERED PROFESSIONAL ENGINEER LANCE M. JONES C 68574 Exp. 6/30/17 CIVIL STATE OF CALIFORNIA

PROJECT ENGINEER DATE

SAN FRANCISQUITO CREEK JOINT POWERS AUTHORITY

ACCEPTED BY DISTRICT

PROJECT ENGINEER DATE

PROJECT NAME AND SHEET DESCRIPTION:

SAN FRANCISQUITO CREEK FLOOD REDUCTION, ECOSYSTEM RESTORATION, & RECREATION PROJECT

PLAN AND PROFILE – (L-LINE)
STATION 14+00 TO 22+00

SCALE	PROJECT NUMBER
AS SHOWN	26284002

VERIFY SCALES
0 1"
BAR IS ONE INCH ON ORIGINAL DRAWING IF NOT ONE INCH ON THIS SHEET, ADJUST SCALES ACCORDINGLY

SHEET CODE: C-11

SHEET NUMBER: 26 OF 126

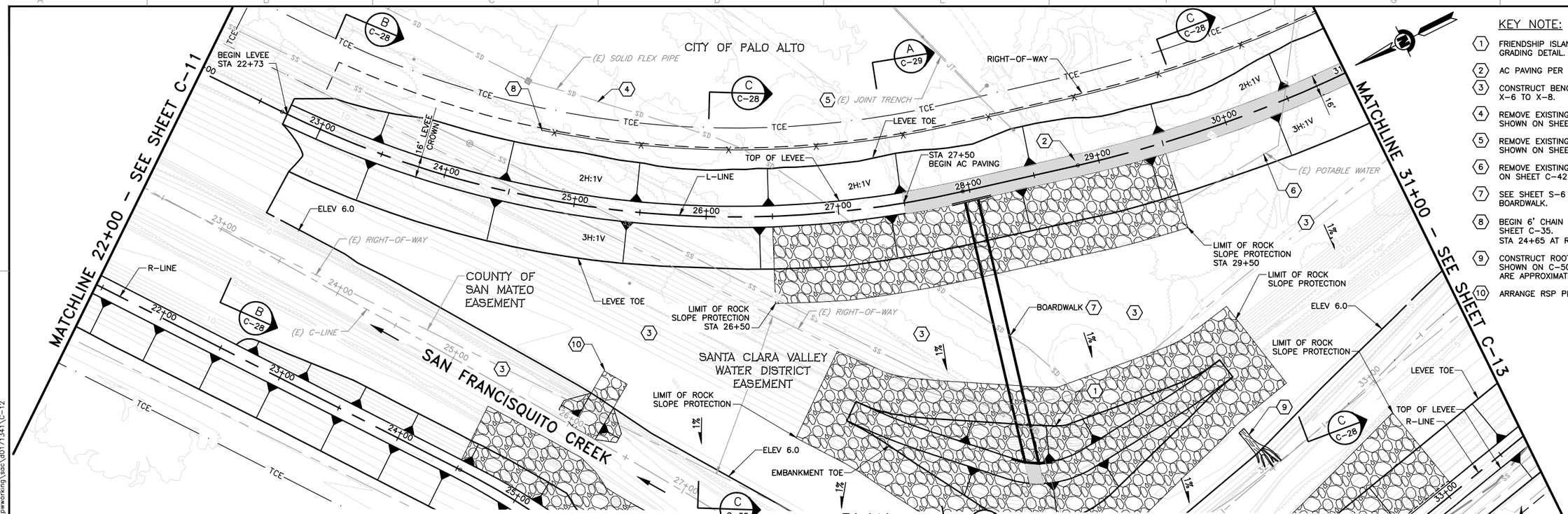

PLAN
SCALE: 1"=40'

KEY NOTE:

1. FRIENDSHIP ISLAND. SEE SHEET C-20 FOR GRADING DETAIL.
2. AC PAVING PER DETAIL 6 ON SHEET C-33.
3. CONSTRUCT BENCH WITHIN CREEK. SEE SHEETS X-6 TO X-8.
4. REMOVE EXISTING STORM DRAIN PER LIMITS SHOWN ON SHEET C-42.
5. REMOVE EXISTING JOINT TRENCH LINE PER LIMITS SHOWN ON SHEET C-42.
6. REMOVE EXISTING WATER LINE PER LIMITS SHOWN ON SHEET C-42.
7. SEE SHEET S-6 FOR CONSTRUCTION OF BOARDWALK.
8. BEGIN 6' CHAIN LINK FENCE PER DETAIL 1 ON SHEET C-35. STA 24+65 AT R/W CONNECT TO (E) FENCE.
9. CONSTRUCT ROOT WAD REVETMENT PER DETAILS SHOWN ON C-50. LOCATION AND CONFIGURATION ARE APPROXIMATE, SEE SPECIFICATIONS.
10. ARRANGE RSP PER DETAIL 1 ON THIS SHEET.

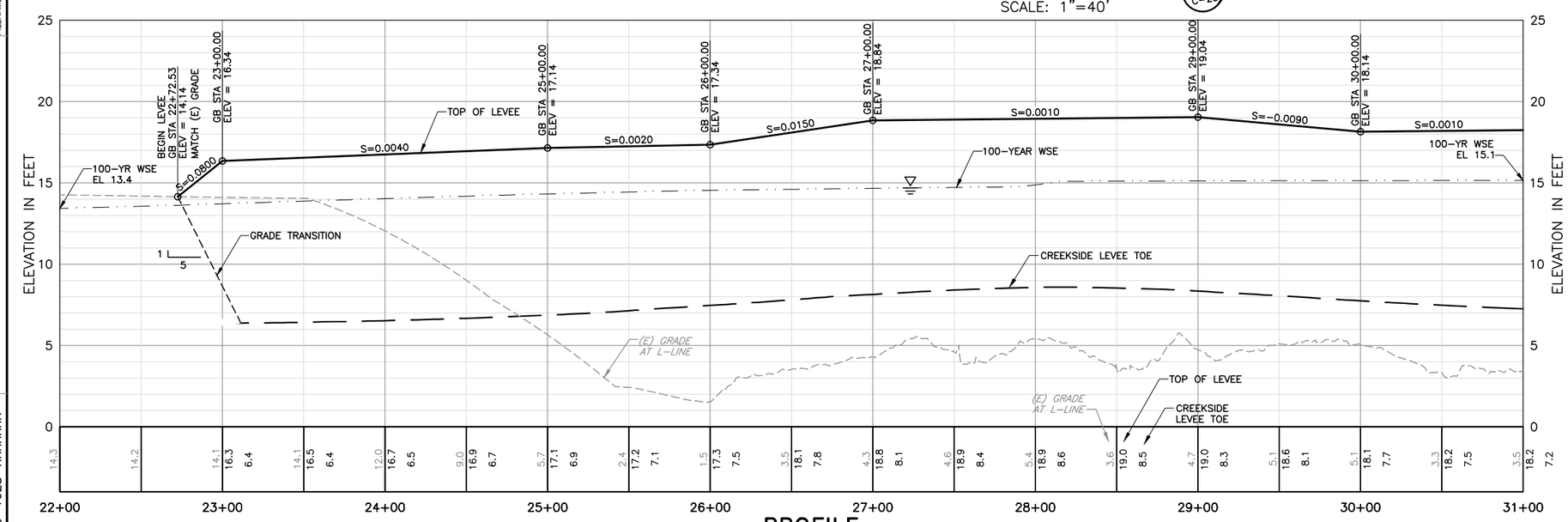

PROFILE
HORIZ: 1"=40'
VERT: 1"=4'

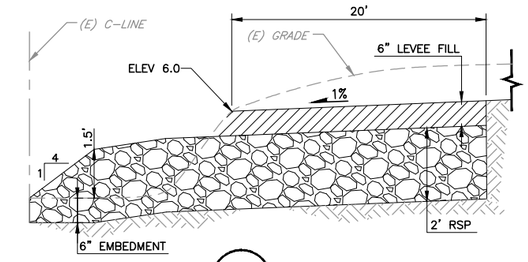

SECTION A RSP REFUGIUM
NTS

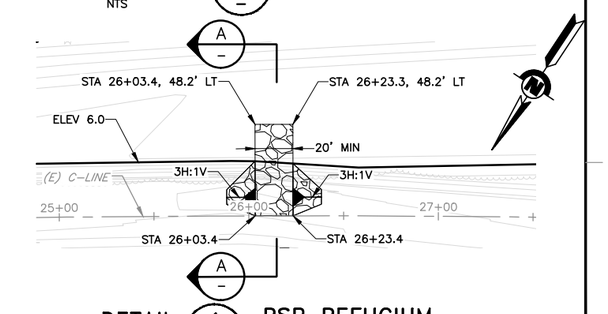

DETAIL 1 RSP REFUGIUM
SCALE: 1" = 40'

REV	DESCRIPTION	DATE	APPR.

DATE: JULY 2015
DESIGN: L. JONES
DRAWN: H. SUAREZ
CHECKED: P. HRADILEK

ENGINEERING CERTIFICATION
REGISTERED PROFESSIONAL ENGINEER LANCE M. JONES C 68574 Exp. 6/30/17 CIVIL STATE OF CALIFORNIA
PROJECT ENGINEER DATE

SAN FRANCISQUITO CREEK JOINT POWERS AUTHORITY
ACCEPTED BY DISTRICT
PROJECT ENGINEER DATE

PROJECT NAME AND SHEET DESCRIPTION:
SAN FRANCISQUITO CREEK FLOOD REDUCTION, ECOSYSTEM RESTORATION, & RECREATION PROJECT
PLAN AND PROFILE – (L-LINE)
STATION 22+00 TO 31+00

SCALE: AS SHOWN
VERIFY SCALES: 0 1" BAR IS ONE INCH ON ORIGINAL DRAWING IF NOT ONE INCH ON THIS SHEET, ADJUST SCALES ACCORDINGLY
PROJECT NUMBER: 26284002
SHEET CODE: C-12
SHEET NUMBER: 27 OF 126

DOCUMENT NUMBER: SFC_LP-C-1028-XXXXXXX

USERNAME: BillShad Tue 08 Jul 2008 09:32am
FILENAME: C:\pwworking\sec\d0171341\C-12

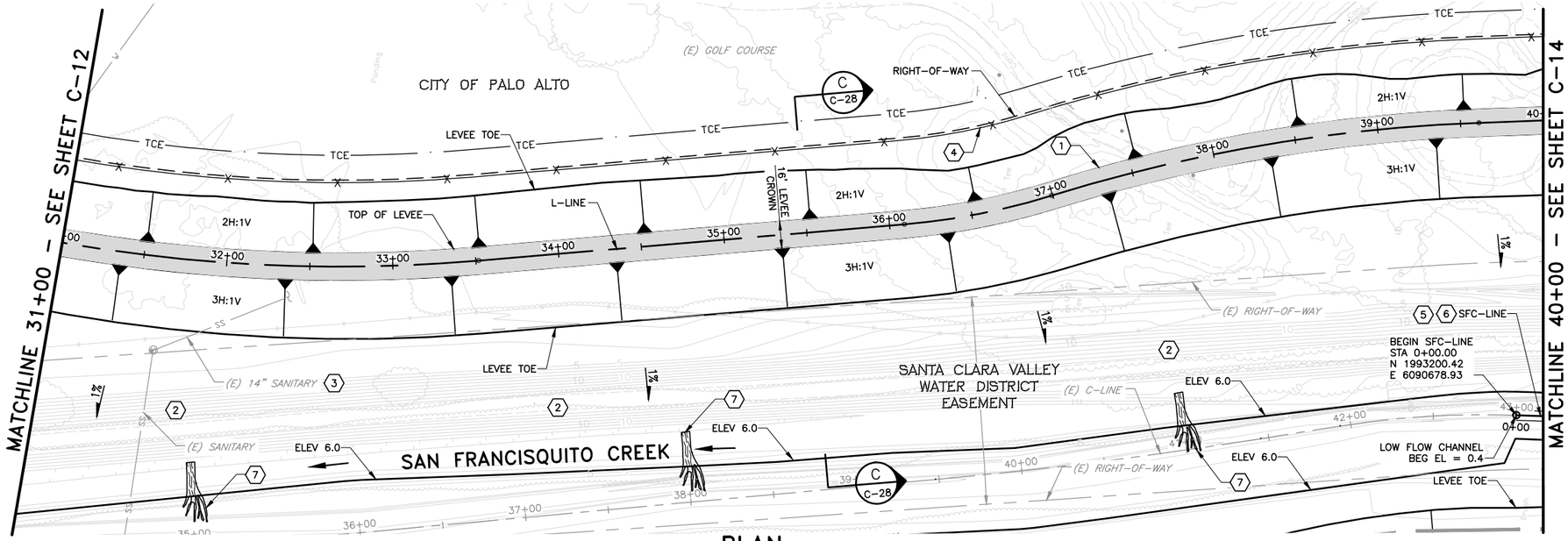

PLAN

SCALE: 1"=40'

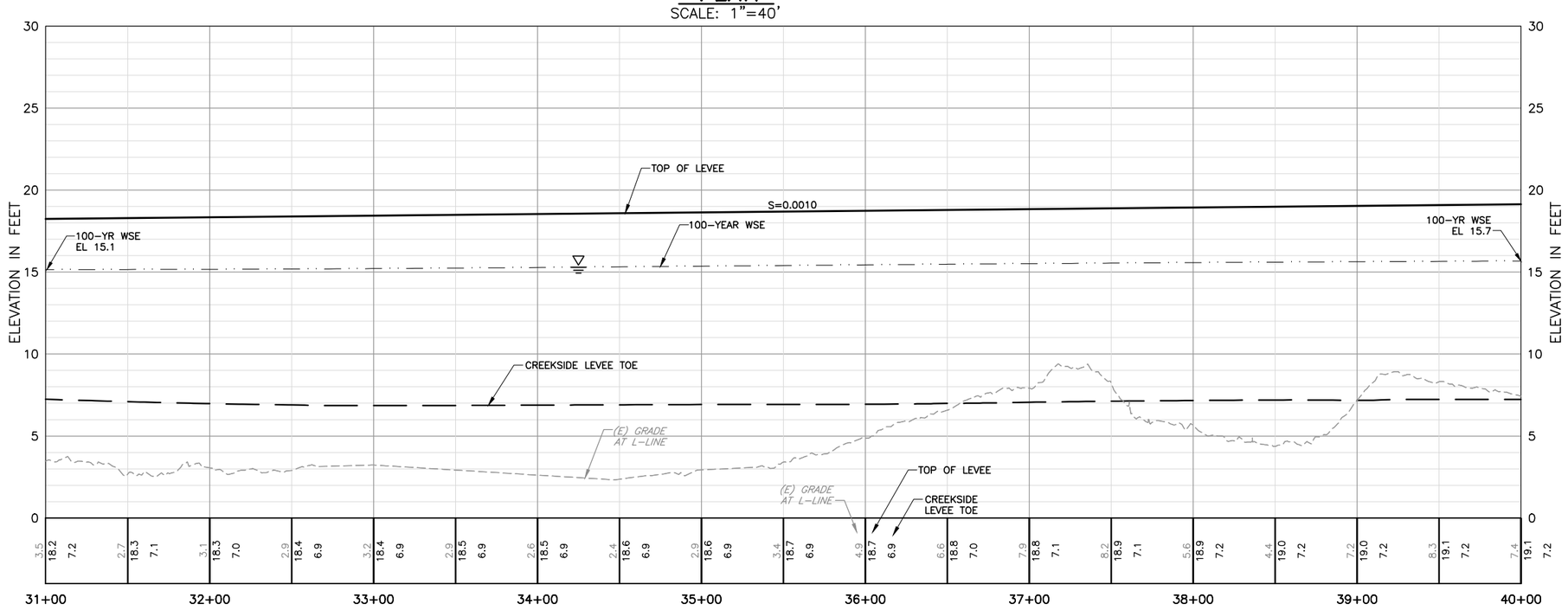

PROFILE

HORIZ: 1"=40'
VERT: 1"=4'

KEY NOTE:

1. AC PAVING PER DETAIL 6 ON SHEET C-33.
2. CONSTRUCT BENCH WITHIN CREEK. SEE SHEETS X-9 TO X-11.
3. REMOVE ABANDONED SANITARY SEWER LINE PER LIMITS SHOWN ON SHEET C-43.
4. 6' CHAIN LINK FENCE PER DETAIL 1 ON SHEET C-35
5. SEE SHEETS X-11 THRU X-13 FOR RE-ALIGNMENT OF LOW FLOW CHANNEL.
6. SEE SHEET C-6 FOR SFC-LINE ALIGNMENT LINE AND CURVE TABLE.
7. CONSTRUCT ROOT WAD REVETMENT PER DETAILS SHOWN ON C-50. LOCATION AND CONFIGURATION ARE APPROXIMATE, SEE SPECIFICATIONS.

REV	DESCRIPTION	DATE	APPR.

HDR

DATE: JULY 2015
DESIGN: L. JONES
DRAWN: H. SUAREZ
CHECKED: P. HRADILEK

ENGINEERING CERTIFICATION
REGISTERED PROFESSIONAL ENGINEER LANCE M. JONES C 68574 Exp. 6/30/17 CIVIL STATE OF CALIFORNIA
PROJECT ENGINEER DATE

SAN FRANCISQUITO CREEK JOINT POWERS AUTHORITY
ACCEPTED BY DISTRICT
PROJECT ENGINEER DATE

PROJECT NAME AND SHEET DESCRIPTION:
SAN FRANCISQUITO CREEK FLOOD REDUCTION, ECOSYSTEM RESTORATION, & RECREATION PROJECT
PLAN AND PROFILE – (L-LINE)
STATION 31+00 TO 40+00

SCALE: AS SHOWN
VERIFY SCALES: 0 1" BAR IS ONE INCH ON ORIGINAL DRAWING IF NOT ONE INCH ON THIS SHEET, ADJUST SCALES ACCORDINGLY

PROJECT NUMBER: 26284002
SHEET CODE: C-13
SHEET NUMBER: 28 OF 126

DOCUMENT NUMBER: SFC-LP-C-1028-XXXXXXX

USERNAME: BillShad Tue 08 Jul 2008 09:32am
FILENAME: C:\pwworking\sec\d0171341\C-13

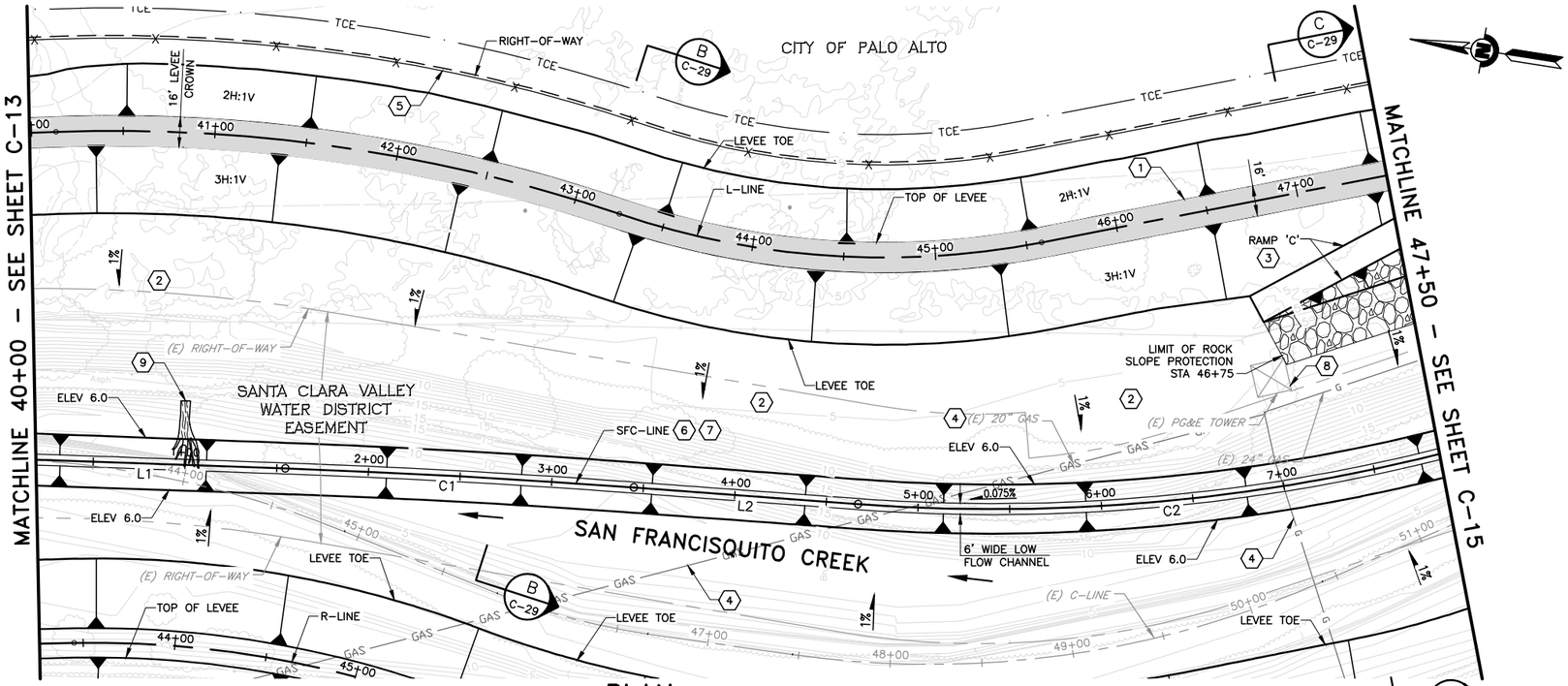

PLAN

SCALE: 1"=40'

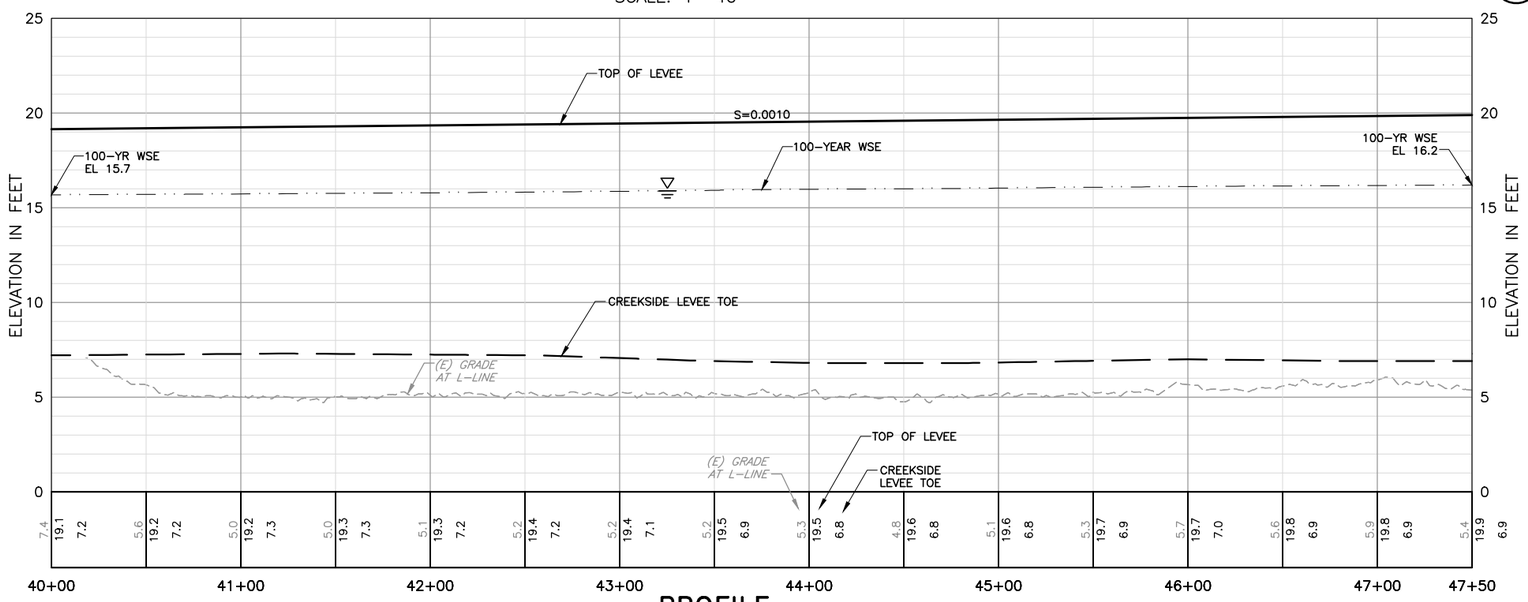

PROFILE

HORIZ: 1"=40'
VERT: 1"=4'

KEY NOTE:

1. AC PAVING PER DETAIL 6 ON SHEET C–33.
2. CONSTRUCT BENCH WITHIN CREEK. SEE SHEETS X–11 TO X–13.
3. SEE SHEET C–19 FOR RAMP DETAIL.
4. CONTRACTOR TO REMOVE EXISTING ABANDONED GAS MAIN. SEE SHEET C–44.
5. 6' CHAIN LINK FENCE PER DETAIL 1 ON SHEET C–35
6. SEE SHEETS X–11 THRU X–13 FOR RE–ALIGNMENT OF LOW FLOW CHANNEL.
7. SEE SHEET C–6 FOR SFC–LINE ALIGNMENT LINE AND CURVE TABLE.
8. EXISTING PG&E TOWER SHOWN WILL BE RELOCATED BY PG&E. CONTRACTOR SHALL LOCATE AND PROTECT IN PLACE.
9. CONSTRUCT ROOT WAD REVETMENT PER DETAILS SHOWN ON C–50. LOCATION AND CONFIGURATION ARE APPROXIMATE, SEE SPECIFICATIONS.

REV	DESCRIPTION	DATE	APPR.

HDR

DATE: JULY 2015
DESIGN: L. JONES
DRAWN: H. SUAREZ
CHECKED: P. HRADILEK

ENGINEERING CERTIFICATION
REGISTERED PROFESSIONAL ENGINEER LANCE M. JONES C 68574 Exp. 6/30/16 CIVIL STATE OF CALIFORNIA
PROJECT ENGINEER DATE

SAN FRANCISQUITO CREEK JOINT POWERS AUTHORITY
ACCEPTED BY DISTRICT
PROJECT ENGINEER DATE

PROJECT NAME AND SHEET DESCRIPTION:
SAN FRANCISQUITO CREEK FLOOD REDUCTION, ECOSYSTEM RESTORATION, & RECREATION PROJECT
PLAN AND PROFILE – (L–LINE)
STATION 40+00 TO 47+50

SCALE: AS SHOWN
VERIFY SCALES: 0 1" BAR IS ONE INCH ON ORIGINAL DRAWING IF NOT ONE INCH ON THIS SHEET, ADJUST SCALES ACCORDINGLY
PROJECT NUMBER: 26284002
SHEET CODE: C–14
SHEET NUMBER: 29 OF 126

DOCUMENT NUMBER: SFC_LP–C–1028–XXXXXXX
USERNAME: BillShad Tue 08 Jul 2008 09:32am
FILENAME: C:\pwworking\sec\d0171341\C–14

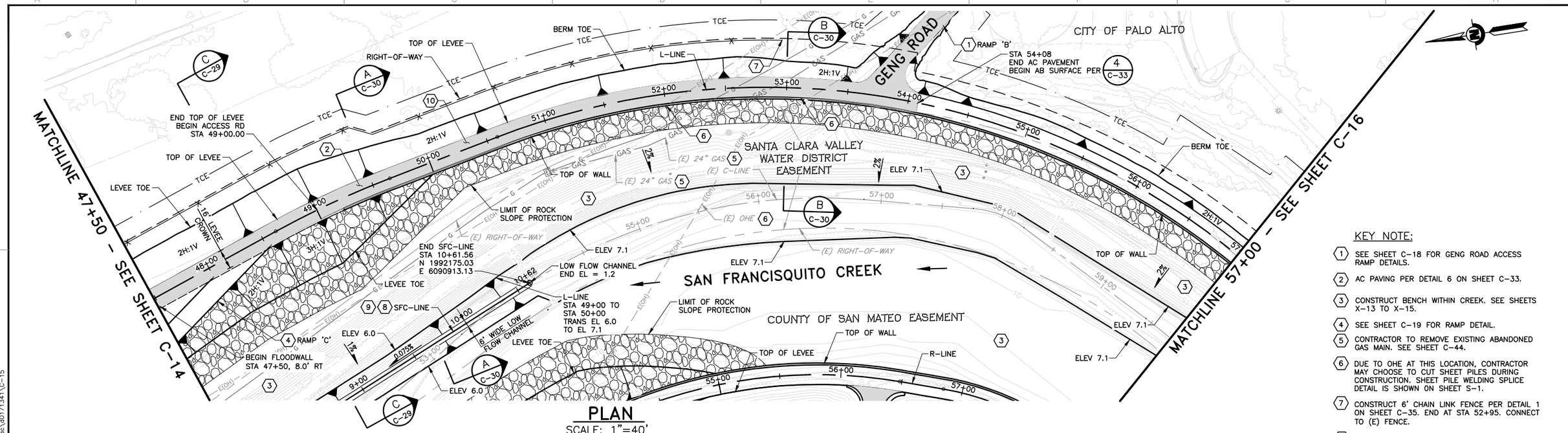

PLAN

SCALE: 1"=40'

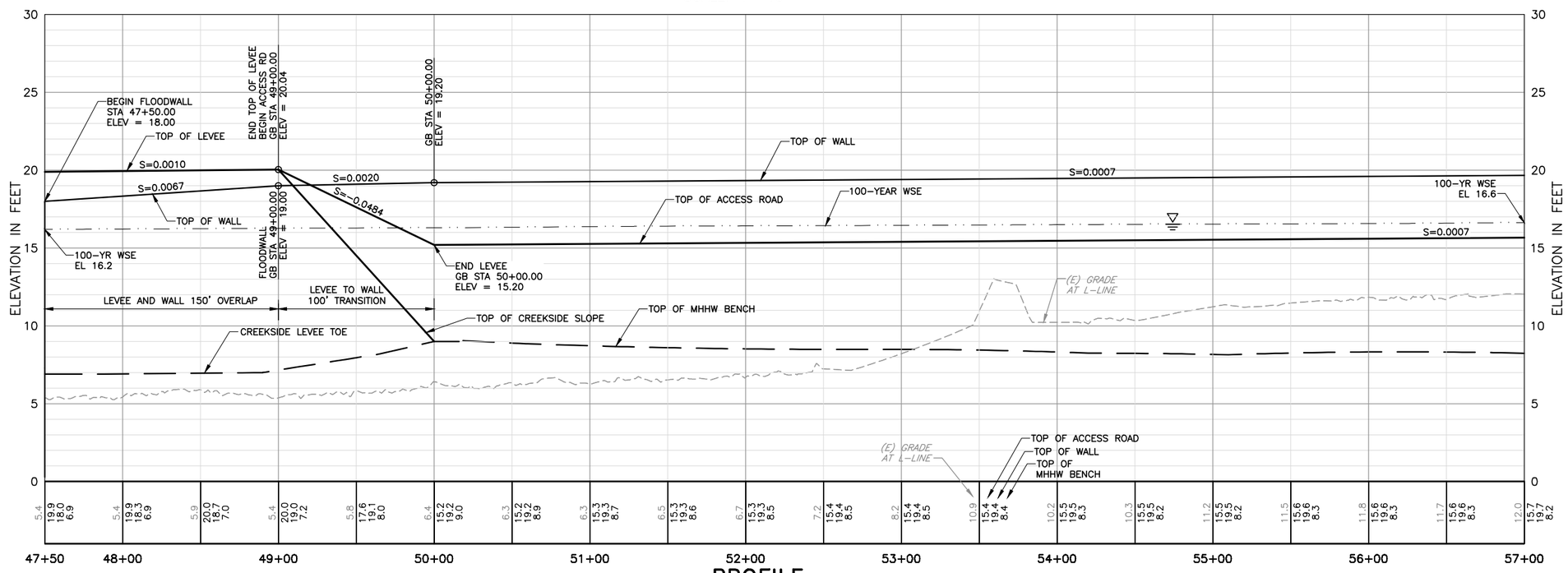

PROFILE

HORIZ: 1"=40'
VERT: 1"=4'

KEY NOTE:

1. SEE SHEET C-18 FOR GENG ROAD ACCESS RAMP DETAILS.
2. AC PAVING PER DETAIL 6 ON SHEET C-33.
3. CONSTRUCT BENCH WITHIN CREEK. SEE SHEETS X-13 TO X-15.
4. SEE SHEET C-19 FOR RAMP DETAIL.
5. CONTRACTOR TO REMOVE EXISTING ABANDONED GAS MAIN. SEE SHEET C-44.
6. DUE TO OHE AT THIS LOCATION, CONTRACTOR MAY CHOOSE TO CUT SHEET PILES DURING CONSTRUCTION. SHEET PILE WELDING SPLICE DETAIL IS SHOWN ON SHEET S-1.
7. CONSTRUCT 6' CHAIN LINK FENCE PER DETAIL 1 ON SHEET C-35. END AT STA 52+95. CONNECT TO (E) FENCE.
8. SEE SHEETS X-11 THRU X-13 FOR RE-ALIGNMENT OF LOW FLOW CHANNEL.
9. SEE SHEET C-6 FOR SFC-LINE ALIGNMENT LINE AND CURVE TABLE.
10. AC PAVING PER DETAIL 7 ON SHEET C-33.

REV	DESCRIPTION	DATE	APPR.

HDR

DATE: JULY 2015
DESIGN: L. JONES
DRAWN: H. SUAREZ
CHECKED: P. HRADILEK

ENGINEERING CERTIFICATION
REGISTERED PROFESSIONAL ENGINEER LANCE M. JONES C 68574 EXP. 6/30/11 CIVIL STATE OF CALIFORNIA
PROJECT ENGINEER DATE

SAN FRANCISQUITO CREEK JOINT POWERS AUTHORITY
ACCEPTED BY DISTRICT
PROJECT ENGINEER DATE

PROJECT NAME AND SHEET DESCRIPTION:
SAN FRANCISQUITO CREEK FLOOD REDUCTION, ECOSYSTEM RESTORATION, & RECREATION PROJECT
PLAN AND PROFILE – (L-LINE)
STATION 47+50 TO 57+00

SCALE: AS SHOWN
VERIFY SCALES: 0 1" BAR IS ONE INCH ON ORIGINAL DRAWING IF NOT ONE INCH ON THIS SHEET, ADJUST SCALES ACCORDINGLY
PROJECT NUMBER: 26284002
SHEET CODE: C-15
SHEET NUMBER: 30 OF 126

DOCUMENT NUMBER: SFC_LP-C-1028-XXXXXXX

USERNAME: BillShad Tue 08 Jul 2008 09:32am
FILENAME: C:\pwworking\sac\d0171341\C-15

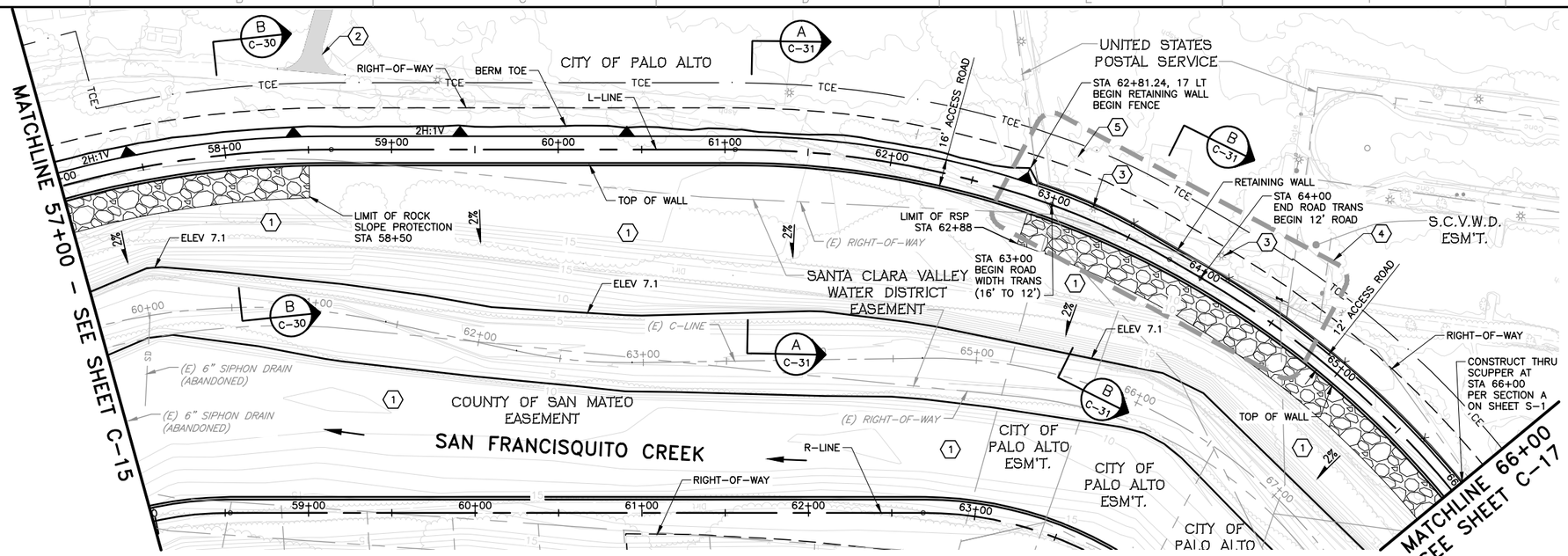

PLAN

SCALE: 1"=40'

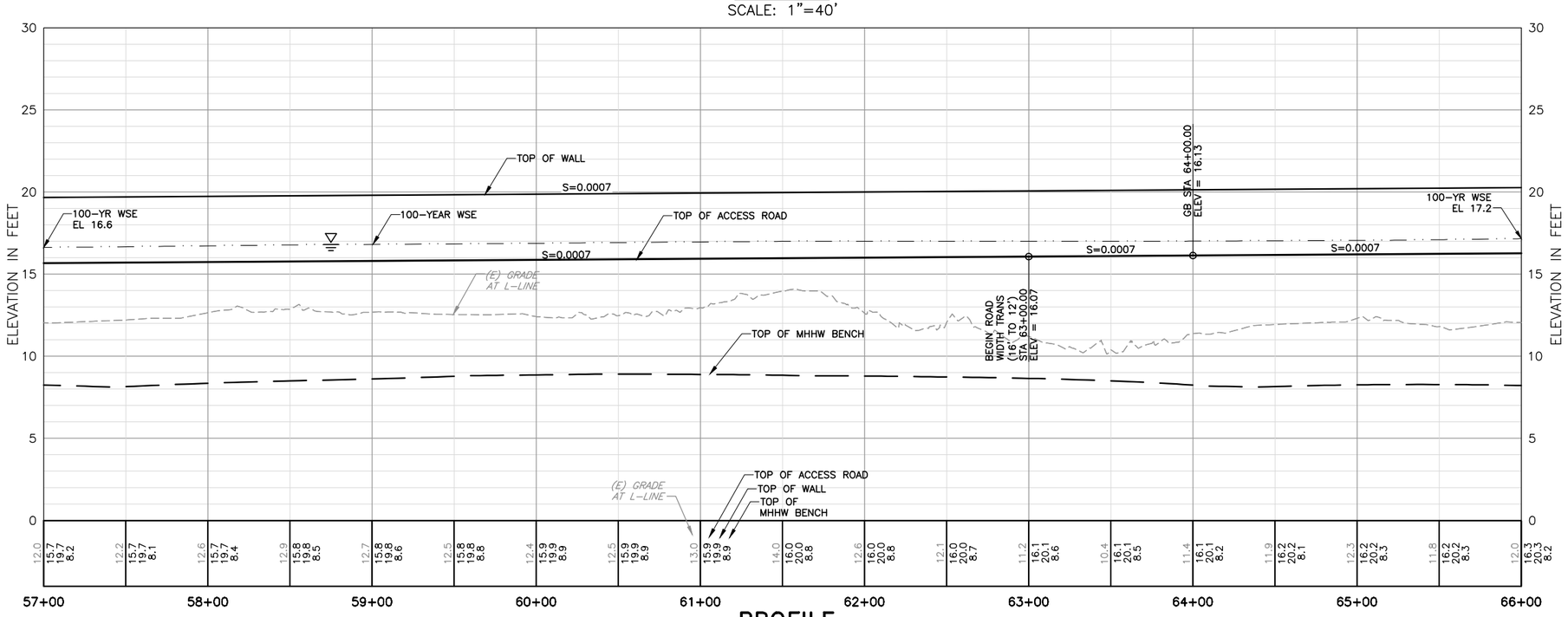

PROFILE

HORIZ: 1"=40'
VERT: 1"=4'

KEY NOTE:

1. CONSTRUCT BENCH WITHIN CREEK. SEE SHEETS X-15 TO X-17.
2. SEE SHEET C-23 FOR HAMMERHEAD TURNAROUND DETAILS.
3. RELOCATE EXISTING ELECTROLIER. CONTRACTOR TO COORDINATE WITH THE CITY OF PALO ALTO AND USPS.
4. SEE SHEET C-37 FOR FENCE DETAILS AT USPS.
5. CONTRACTOR SHALL SALVAGE ALL EXISTING ELECTROLIERS IN THIS AREA AND COORDINATE WITH THE DISTRICT REGARDING THEIR SALVAGE LOCATION.

REV	DESCRIPTION	DATE	APPR.

HDR

DATE: JULY 2015
DESIGN: L. JONES
DRAWN: H. SUAREZ
CHECKED: P. HRADILEK

ENGINEERING CERTIFICATION
REGISTERED PROFESSIONAL ENGINEER LANCE M. JONES 68574 Exp. 30/17 CIVIL STATE OF CALIFORNIA
PROJECT ENGINEER DATE

SAN FRANCISQUITO CREEK JOINT POWERS AUTHORITY
ACCEPTED BY DISTRICT
PROJECT ENGINEER DATE

PROJECT NAME AND SHEET DESCRIPTION:
SAN FRANCISQUITO CREEK FLOOD REDUCTION, ECOSYSTEM RESTORATION, & RECREATION PROJECT
PLAN AND PROFILE – (L-LINE)
STATION 57+00 TO 66+00

SCALE: AS SHOWN
VERIFY SCALES: 0 1"
BAR IS ONE INCH ON ORIGINAL DRAWING IF NOT ONE INCH ON THIS SHEET, ADJUST SCALES ACCORDINGLY

PROJECT NUMBER: 26284002
SHEET CODE: C-16
SHEET NUMBER: 31 OF 126

DOCUMENT NUMBER: SFC_LP-C-1028-XXXXXXX

USERNAME: BillShad Tue 08 Jul 2008 09:32am
FILENAME: C:\pwworking\sec\d0171341\C-16

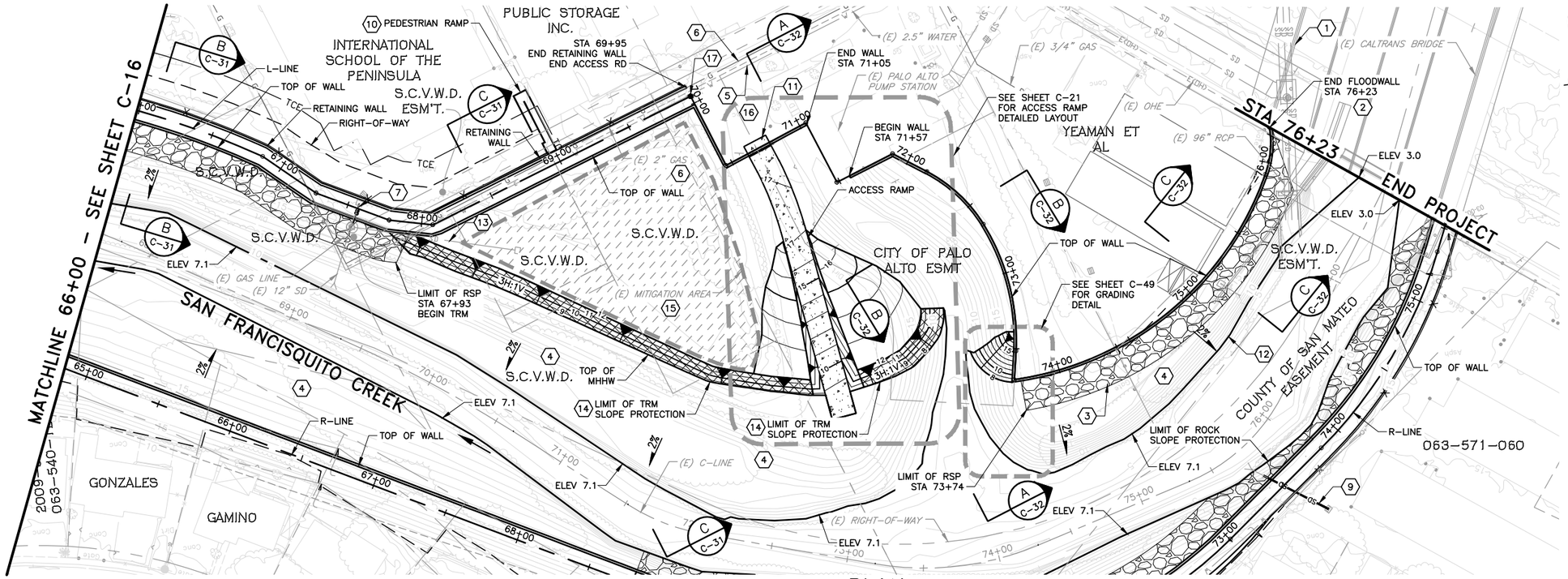

PLAN

SCALE: 1"=40'

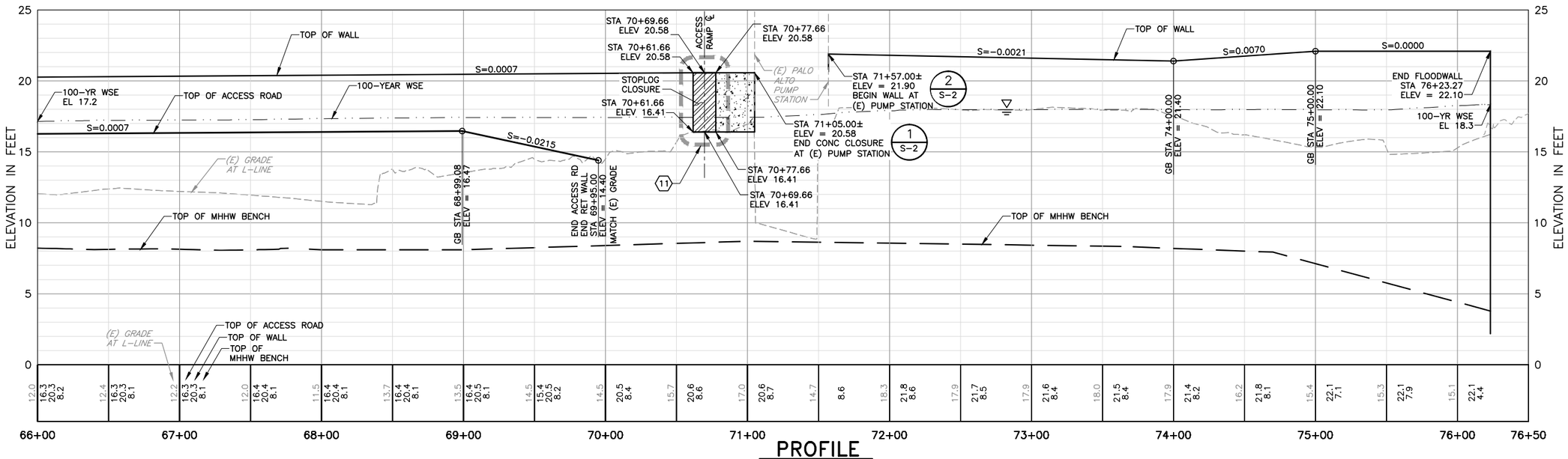

PROFILE

HORIZ: 1"=40'
VERT: 1"=4'

KEY NOTE:

1. 96" STORM DRAIN OUTFALL TO BE RELOCATED BY CALTRANS PRIOR TO CONSTRUCTION.
2. END FLOODWALL AT EXISTING BRIDGE STRUCTURE PER DETAIL 2 ON SHEET S-1.
3. CONSTRUCT ROCK SLOPE PROTECTION AT FLOODWALL TOE PER DETAIL 1 ON SHEET C-34.
4. CONSTRUCT BENCH WITHIN CREEK. SEE SHEETS X-17 TO X-19.
5. CONTRACTOR TO REMOVE EXISTING 2.5" WATER LINE. SEE SHEET C-46.
6. CONTRACTOR TO REMOVE EXISTING 2" GAS LINE. SEE SHEET C-46.
7. CONSTRUCT STORM DRAIN CROSSING PER DETAIL 'A' SHOWN ON SHEET C-48.
8. NOT USED
9. CONSTRUCT STORM DRAIN CROSSING PER DETAIL 'C' SHOWN ON SHEET C-48.
10. SEE SHEET C-22 FOR INTERNATIONAL SCHOOL PEDESTRIAN RAMP DETAILS.
11. SEE SHEETS C-38, S-2, AND S-4 FOR STOPLOG CLOSURE DETAILS.
12. L-LINE STA 74+70 TO STA 76+19 TRANSITION DAYLIGHT FROM EL 7.1 TO EL 3.0
13. CONSTRUCT STORM DRAIN OUTFALL PER DETAIL SHOWN ON SHEET C-49.
14. INSTALL TRM PER DETAIL 1 TO 5 AS SHOWN ON SHEET C-39.
15. CONTRACTOR SHALL NOT DISTURB (E) MITIGATION AREA. SEE TABLE ON SHEET C-49 FOR LIMITS.
16. EXISTING PARKING LOT CONSISTS OF PERMEABLE PAVEMENT. CONTRACTOR SHALL COVER PERVIOUS PAVEMENT DURING CONSTRUCTION OPERATIONS TO PREVENT DAMAGE DUE TO SILTATION.
17. INSTALL FOLDABLE BOLLARD. SEE SHEET C-21. MATCH EXISTING.

REV	DESCRIPTION	DATE	APPR.

HDR

DATE: JULY 2015
DESIGN: L. JONES
DRAWN: H. SUAREZ
CHECKED: P. HRADILEK

ENGINEERING CERTIFICATION
REGISTERED PROFESSIONAL ENGINEER LANCE M. JONES 085741 EXP. 06/17 CIVIL STATE OF CALIFORNIA
PROJECT ENGINEER DATE

SAN FRANCISQUITO CREEK JOINT POWERS AUTHORITY
ACCEPTED BY DISTRICT
PROJECT ENGINEER DATE

PROJECT NAME AND SHEET DESCRIPTION:
SAN FRANCISQUITO CREEK FLOOD REDUCTION, ECOSYSTEM RESTORATION, & RECREATION PROJECT
PLAN AND PROFILE – (L-LINE)
STATION 66+00 TO 76+50

SCALE: AS SHOWN
VERIFY SCALES: 0 1" BAR IS ONE INCH ON ORIGINAL DRAWING IF NOT ONE INCH ON THIS SHEET, ADJUST SCALES ACCORDINGLY
PROJECT NUMBER: 26284002
SHEET CODE: C-17
SHEET NUMBER: 32 OF 126

DOCUMENT NUMBER: SFC_LP-C-1028-XXXXXX
USERNAME: BillShad Tue 08 Jul 2008 09:32am
FILENAME: C:\pwworking\sec\d0171341\C-17

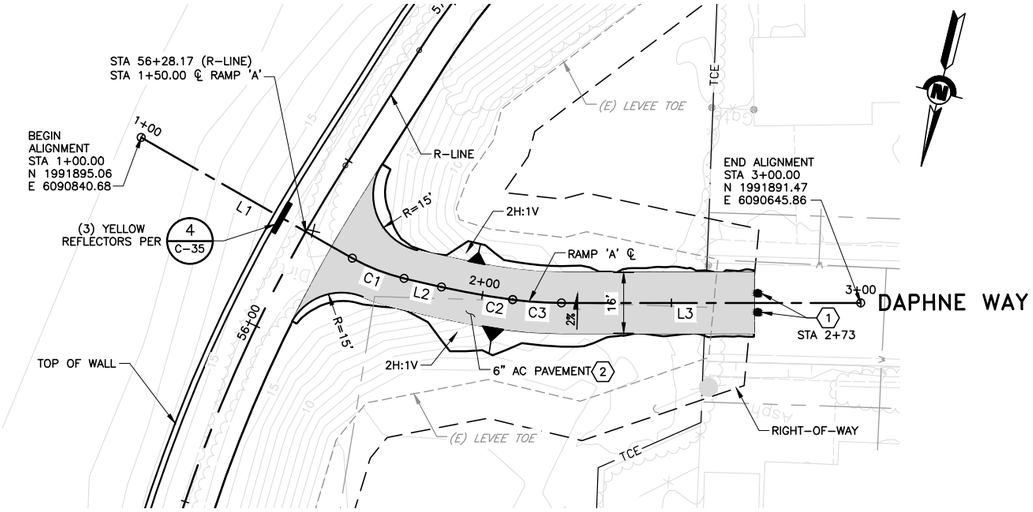

PLAN – RAMP 'A'

SCALE: 1"=20'

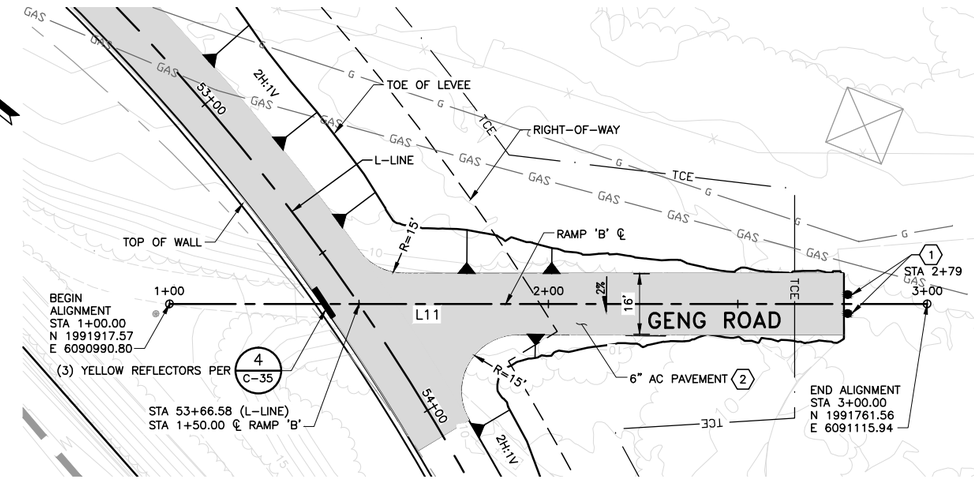

PLAN – RAMP 'B'

SCALE: 1"=20'

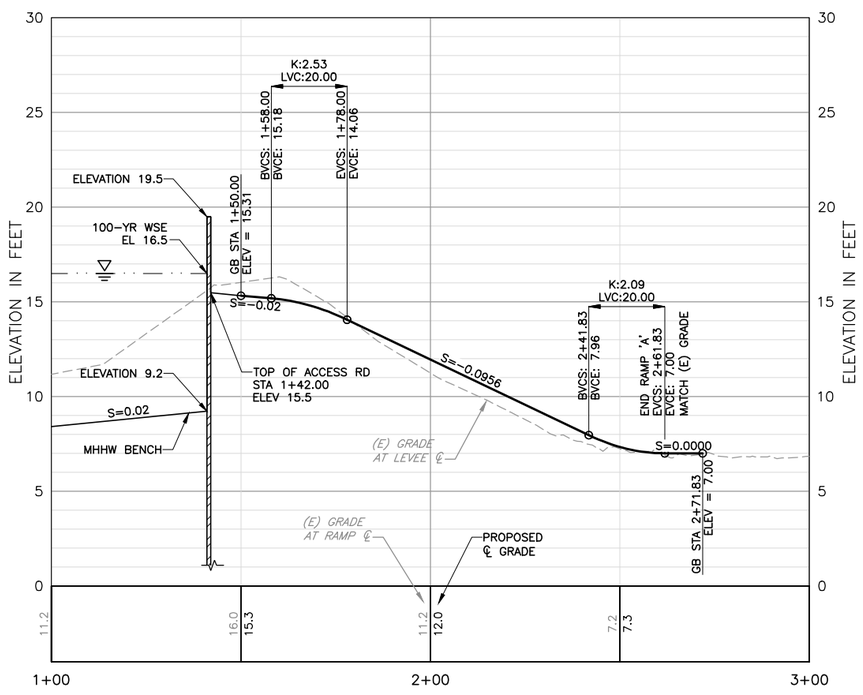

PROFILE – RAMP 'A'

HORIZ: 1"=20'
VERT: 1"=4'

RAMP 'A' ALIGNMENT LINE AND CURVE TABLE

NUMBER	START STA	END STA	CURVE PI	LENGTH	DELTA	RADIUS	LINE/CHORD BRNG
L1	1+00.00	1+64.22	N/A	64.22'	N/A	N/A	N74°17'01"W
C1	1+64.22	1+78.89	1+71.61	14.67'	16°48'41"	50.00'	N82°41'21"W
L2	1+78.89	1+89.03	N/A	10.14'	N/A	N/A	S88°54'18"W
C2	1+89.03	2+08.11	1+98.58	19.08'	5°27'58"	200.00'	S86°10'19"W
C3	2+08.11	2+21.05	2+14.59	12.94'	7°24'58"	100.00'	S79°43'51"W
L3	2+21.05	3+00.00	N/A	78.95'	N/A	N/A	S76°01'22"W

RAMP 'B' ALIGNMENT LINE TABLE

NUMBER	START STA	END STA	CURVE PI	LENGTH	DELTA	RADIUS	LINE/CHORD BRNG
L11	1+00.00	3+00.00	N/A	200.00'	N/A	N/A	S38°44'04"E

KEY NOTE:

1. INSTALL FOLDABLE BOLLARDS PER DETAIL 2 ON SHEET C-34 CENTER OF BOLLARD IS OFFSET 2.5' FROM RAMP CENTERLINE.
2. AC PAVING PER DETAIL 6 ON SHEET C-33.

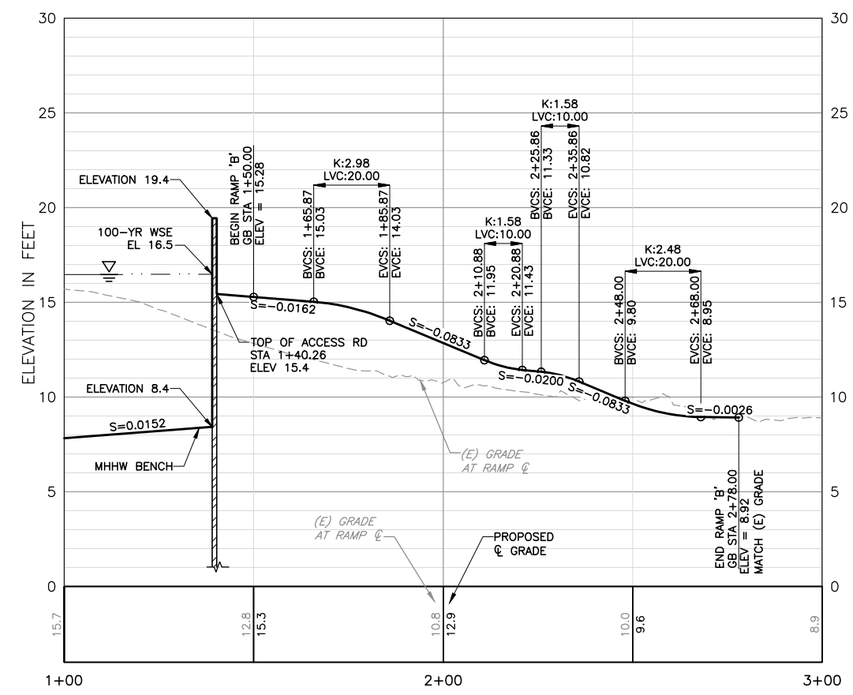

PROFILE – RAMP 'B'

HORIZ: 1"=20'
VERT: 1"=4'

REV	DESCRIPTION	DATE	APPR.

HDR

DATE JULY 2015
DESIGN L. JONES
DRAWN H. SUAREZ
CHECKED P. HRADILEK

ENGINEERING CERTIFICATION
REGISTERED PROFESSIONAL ENGINEER LANCE M. JONES 08574 EXP. 12/31/17 CIVIL STATE OF CALIFORNIA
PROJECT ENGINEER DATE

SAN FRANCISQUITO CREEK JOINT POWERS AUTHORITY
ACCEPTED BY DISTRICT
PROJECT ENGINEER DATE

PROJECT NAME AND SHEET DESCRIPTION:
SAN FRANCISQUITO CREEK FLOOD REDUCTION, ECOSYSTEM RESTORATION, & RECREATION PROJECT
PLAN AND PROFILE – RAMP 'A' (R-LINE)
PLAN AND PROFILE – RAMP 'B' (L-LINE)

SCALE: AS SHOWN
VERIFY SCALES: 0 1"
BAR IS ONE INCH ON ORIGINAL DRAWING IF NOT ONE INCH ON THIS SHEET, ADJUST SCALES ACCORDINGLY

PROJECT NUMBER: 26284002
SHEET CODE: C-18
SHEET NUMBER: 33 OF 126

DOCUMENT NUMBER: SFC_LP-C-1028-XXXXXX

USERNAME: BillShad Tue 08 Jul 2008 09:32am
FILENAME: C:\pwworking\sac\d0171341\C-18

RAMP 'C' ALIGNMENT LINE TABLE

NUMBER	START STA	END STA	CURVE PI	LENGTH	DELTA	RADIUS	LINE/CHORD BRNG
L1	0+00.00	4+50.00	N/A	450.00'	N/A	N/A	S37°12'34"E

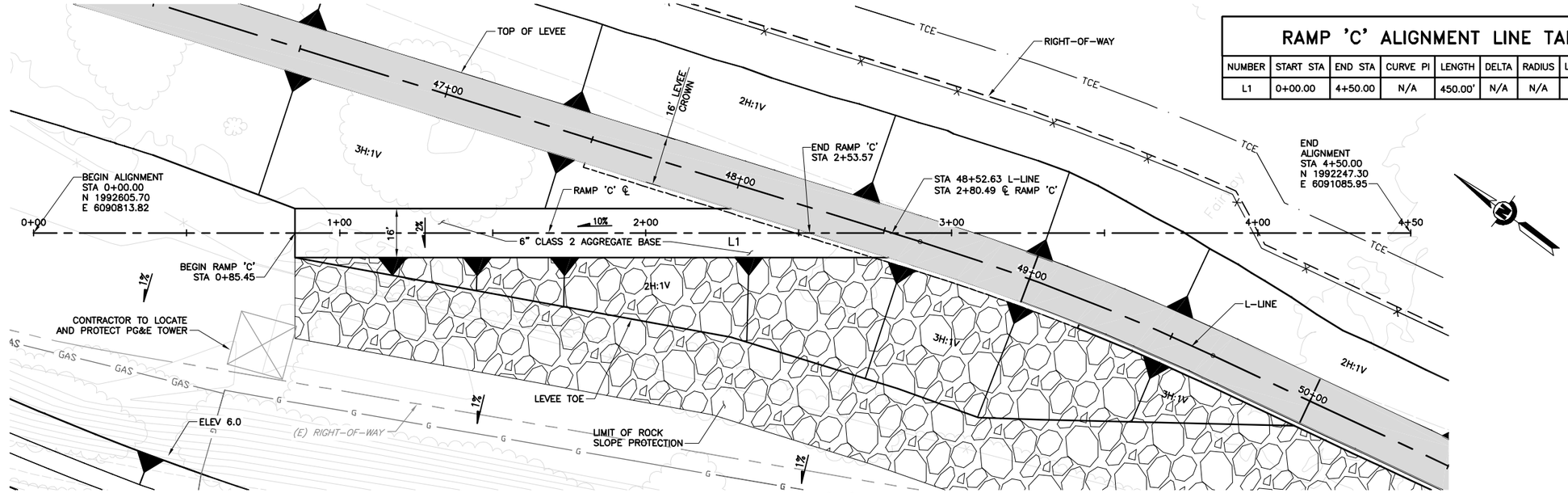

PLAN – RAMP 'C'

SCALE: 1"=20'

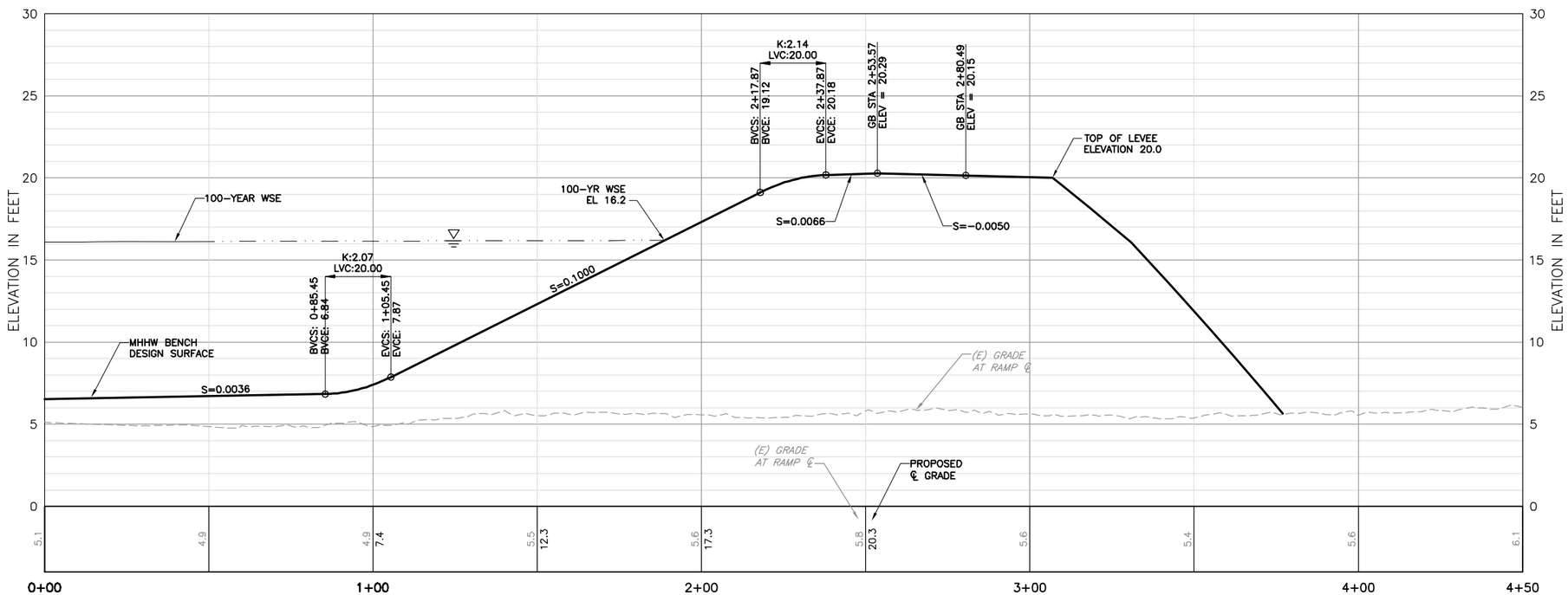

PROFILE – RAMP 'C'

HORIZ: 1"=20'
VERT: 1"=4'

REV	DESCRIPTION	DATE	APPR.

HDR

DATE: JULY 2015
DESIGN: L. JONES
DRAWN: H. SUAREZ
CHECKED: P. HRADILEK

ENGINEERING CERTIFICATION
REGISTERED PROFESSIONAL ENGINEER LANCE M. JONES C 085741 Exp. 12/31/15 CIVIL STATE OF CALIFORNIA
PROJECT ENGINEER DATE

SAN FRANCISQUITO CREEK JOINT POWERS AUTHORITY
ACCEPTED BY DISTRICT
PROJECT ENGINEER DATE

PROJECT NAME AND SHEET DESCRIPTION:
SAN FRANCISQUITO CREEK FLOOD REDUCTION, ECOSYSTEM RESTORATION, & RECREATION PROJECT
PLAN AND PROFILE – RAMP 'C' (L-LINE)

SCALE: AS SHOWN
VERIFY SCALES: 0 1"
BAR IS ONE INCH ON ORIGINAL DRAWING IF NOT ONE INCH ON THIS SHEET, ADJUST SCALES ACCORDINGLY

PROJECT NUMBER: 26284002
SHEET CODE: C-19
SHEET NUMBER: 34 OF 126

DOCUMENT NUMBER: SFC_LP-C-1028-XXXXXXX

USERNAME: BillShad Tue 08 Jul 2008 09:32am
FILENAME: C:\pwworking\sac\d0171341\C-19

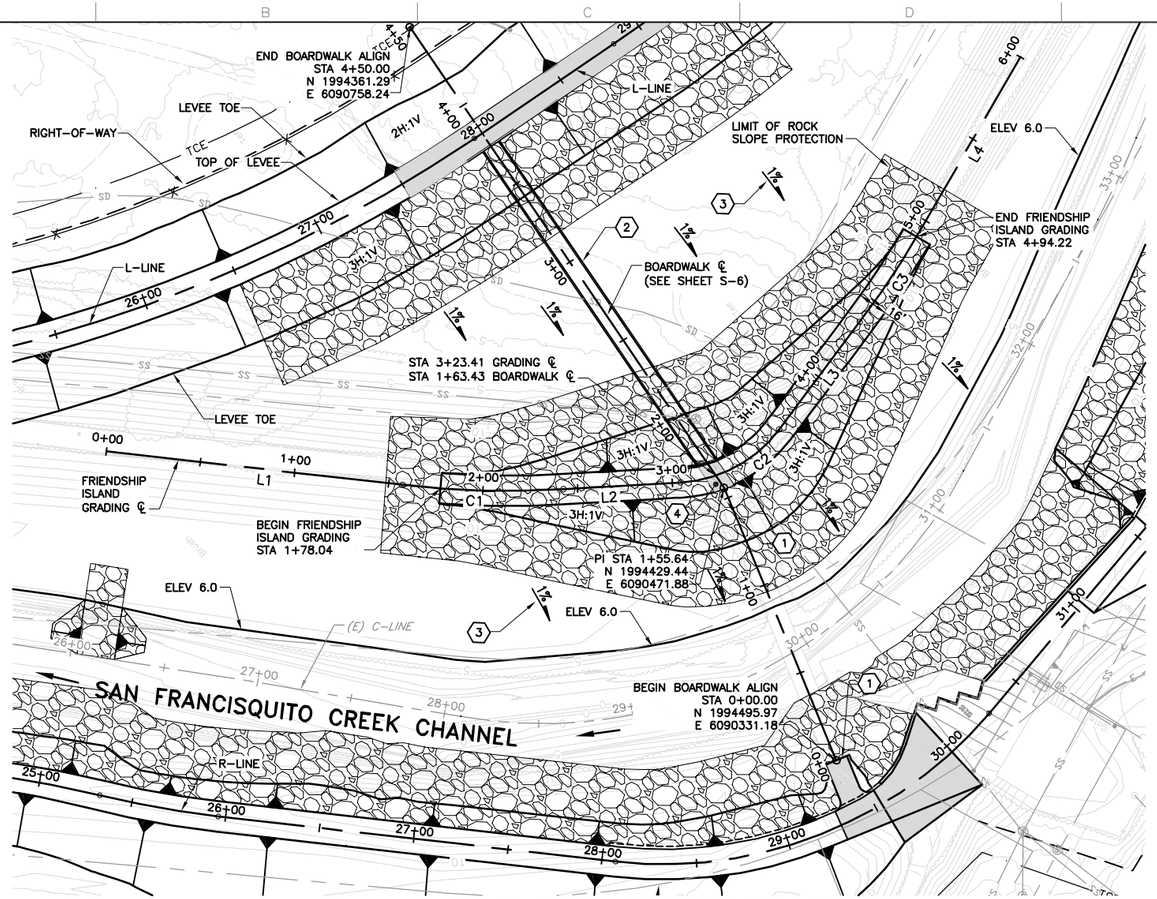

PLAN – FRIENDSHIP ISLAND

HORIZ: 1"=40'

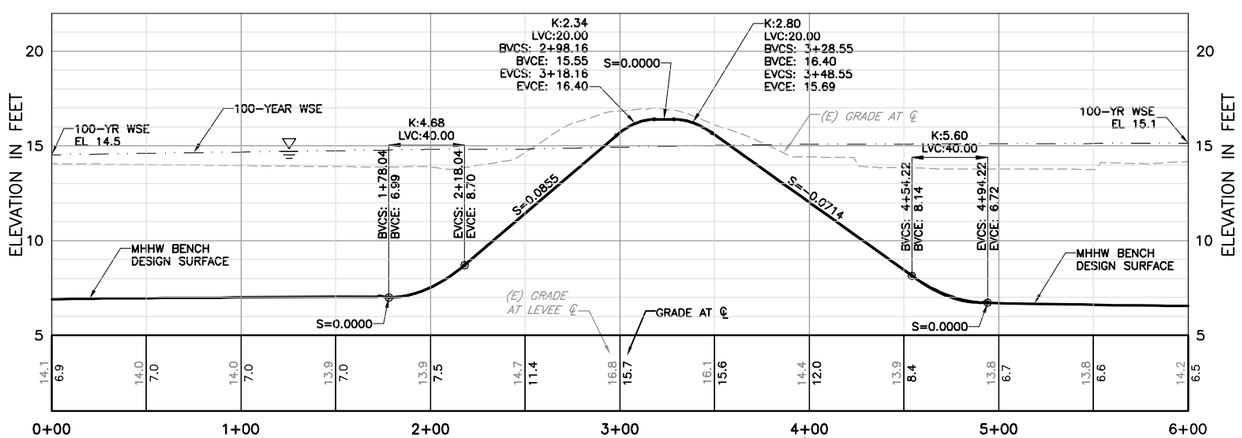

PROFILE – FRIENDSHIP ISLAND

HORIZ: 1"=40'
VERT: 1"=4'

KEY NOTE:

1. CONTRACTOR TO PROTECT EXISTING BRIDGE AND ABUTMENT.
2. NEW BOARDWALK. SEE SHEETS S-6 THROUGH S-10.
3. THE DIRECTION OF THE 1% GRADING IS PERPENDICULAR TO "L-LINE".
4. AC PAVEMENT BETWEEN (E) BRIDGE AND NEW BOARDWALK PER DETAIL 6 ON SHEET C-33.
5. INSTALL FOLDABLE BOLLARDS PER DETAIL '2' ON SHEET C-34. CENTER OF BOLLARD IS OFFSET 2.5' FROM RAMP CENTERLINE.
6. AC PAVING PER DETAIL 6 ON SHEET C-33.

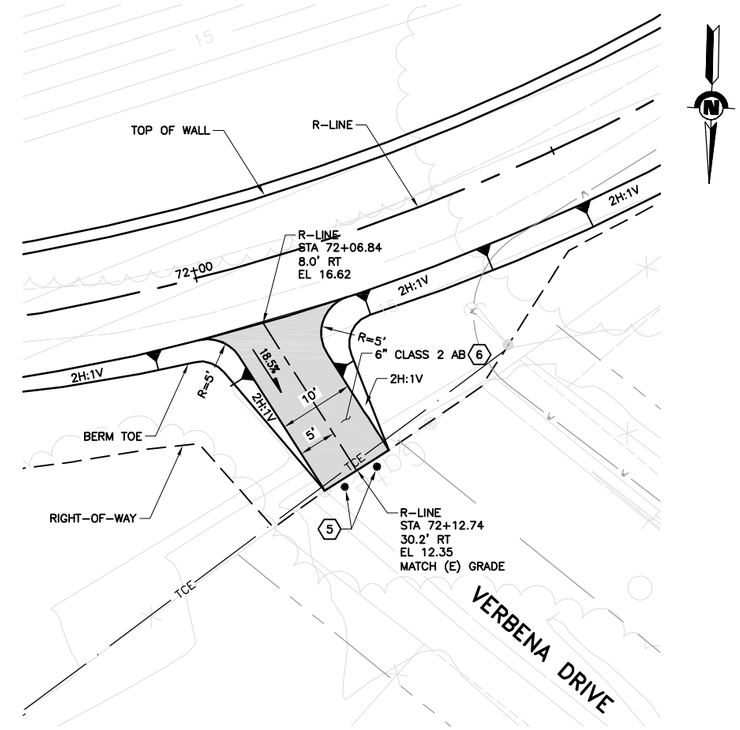

PLAN – PEDESTRIAN RAMP AT VERBENA DRIVE

HORIZ: 1"=10'

FRIENDSHIP ISLAND ALIGNMENT LINE AND CURVE TABLE

NUMBER	START STA	END STA	CURVE PI	LENGTH	DELTA	RADIUS	LINE/CHORD BRNG	START POINT COORDINATE	END POINT COORDINATE
L1	0+00.00	1+57.33	N/A	157.33'	N/A	N/A	S54°07'22"W	N 1994634.82, E 6090725.98	N 1994542.62, E 6090598.50
C1	1+57.33	2+42.46	2+00	85.12'	9°45'16"	500.00'	S49°14'44"W	N 1994542.62, E 6090598.50	N 1994487.11, E 6090534.09
L2	2+42.46	3+04.49	N/A	62.03'	N/A	N/A	S44°22'06"W	N 1994487.11, E 6090534.09	N 1994442.77, E 6090490.72
C2	3+04.49	3+65.41	3+37.03	60.92'	49°52'03"	70.00'	S19°26'04"W	N 1994442.77, E 6090490.72	N 1994387.11, E 6090471.08
L3	3+65.41	4+36.34	N/A	70.92'	N/A	N/A	S5°29'57"E	N 1994387.11, E 6090471.08	N 1994316.52, E 6090477.88
C3	4+36.34	4+95.67	4+66.04	59.34'	6°47'58"	500.00'	S8°53'56"E	N 1994316.52, E 6090477.88	N 1994257.93, E 6090487.05
L4	4+95.67	6+00.00	N/A	104.33'	N/A	N/A	S12°17'55"E	N 1994257.93, E 6090487.05	N 1994156.00, E 6090509.27

REV	DESCRIPTION	DATE	APPR.

HDR

DATE: JULY 2015
DESIGN: L. JONES
DRAWN: H. SUAREZ
CHECKED: P. HRADILEK

ENGINEERING CERTIFICATION
REGISTERED PROFESSIONAL ENGINEER — JANICE M. JONES — 085744 — Exp. 6/30/16 — CIVIL — STATE OF CALIFORNIA
PROJECT ENGINEER DATE

SAN FRANCISQUITO CREEK JOINT POWERS AUTHORITY

ACCEPTED BY DISTRICT
PROJECT ENGINEER DATE

PROJECT NAME AND SHEET DESCRIPTION:
SAN FRANCISQUITO CREEK FLOOD REDUCTION, ECOSYSTEM RESTORATION, & RECREATION PROJECT
PLAN & PROFILE – FRIENDSHIP ISLAND GRADING PLAN – PEDESTRIAN RAMP

SCALE: AS SHOWN
VERIFY SCALES: 0 1"
BAR IS ONE INCH ON ORIGINAL DRAWING IF NOT ONE INCH ON THIS SHEET, ADJUST SCALES ACCORDINGLY

PROJECT NUMBER: 26284002
SHEET CODE: C-20
SHEET NUMBER: 35 OF 126

DOCUMENT NUMBER: SFC_LP-C-1028-XXXXXX

USERNAME: BillShad Tue 08 Jul 2008 09:32am
FILENAME: C:\pwworking\sac\d0171341\C-20

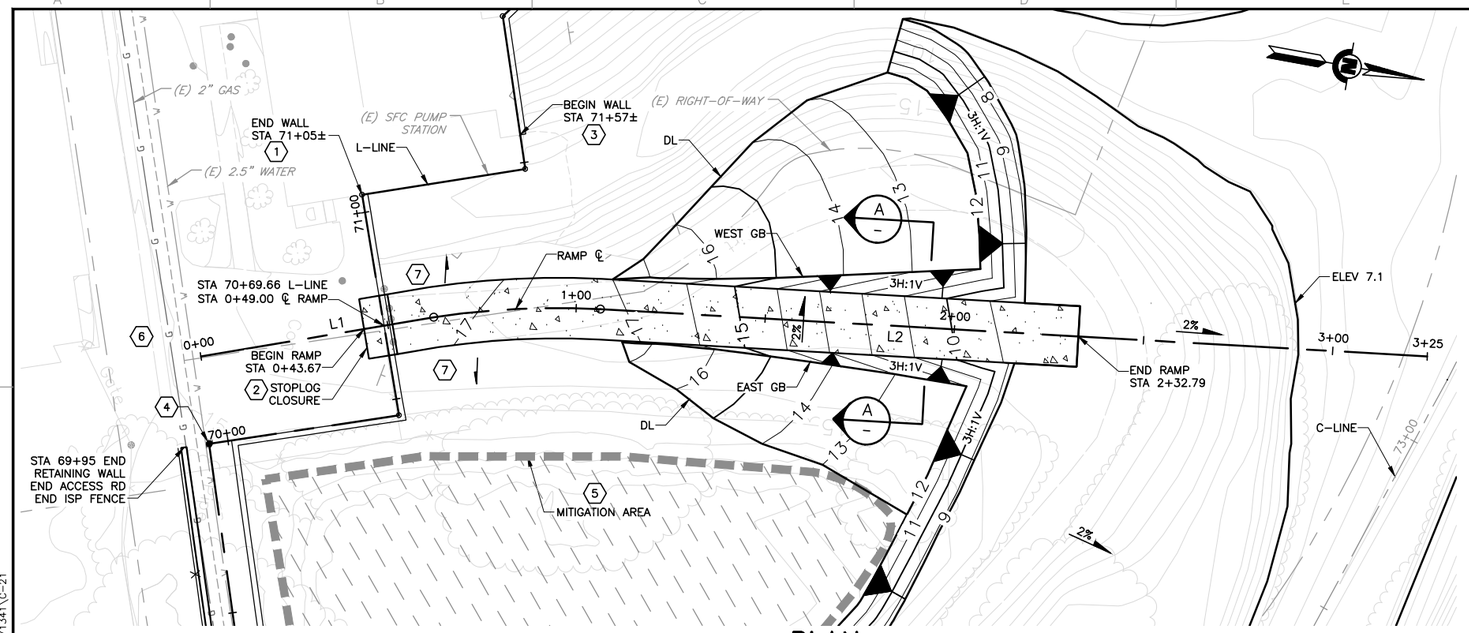

PLAN

SCALE: 1"=20'

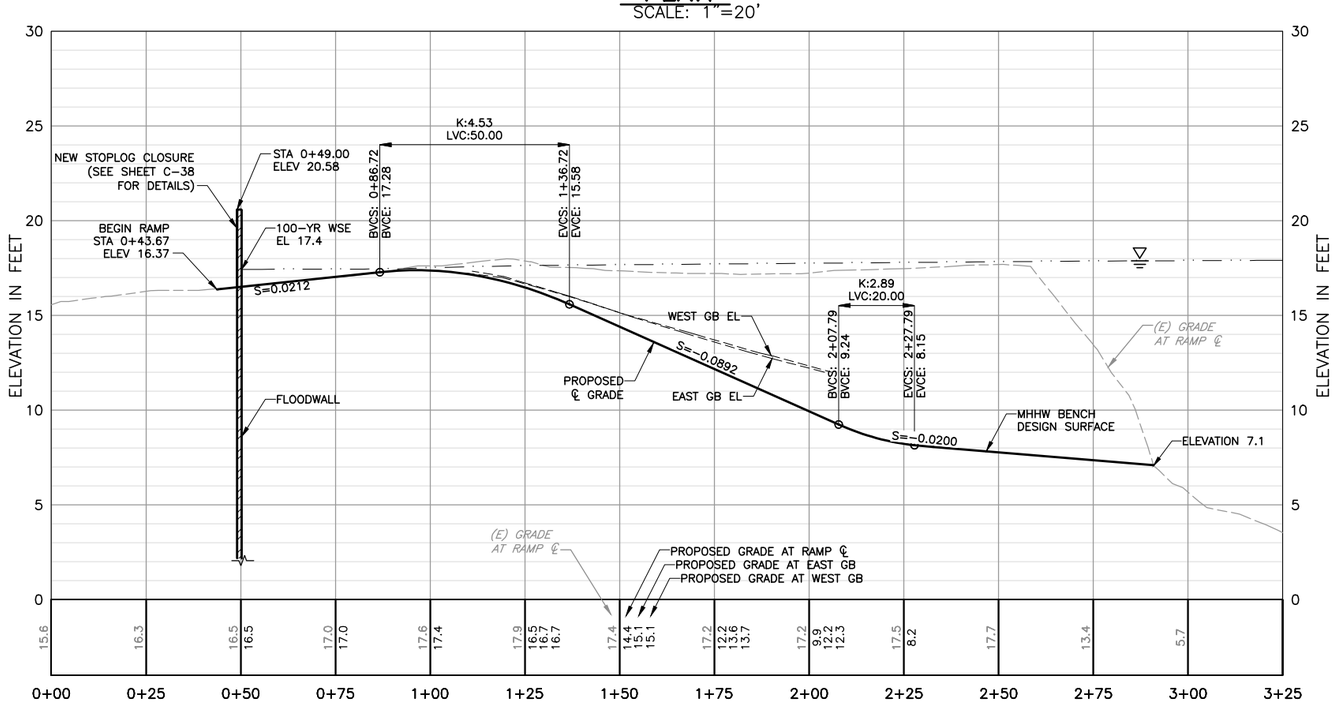

PROFILE

HORIZ: 1"=20'
VERT: 1"=4'

ACCESS RAMP ALIGNMENT LINE AND CURVE TABLE

NUMBER	START STA	END STA	CURVE PI	LENGTH	DELTA	RADIUS	LINE/CHORD BRNG	START POINT COORDINATE	END POINT COORDINATE
L1	0+00.00	0+62.35	N/A	62.35'	N/A	N/A	N19°49'43"W	N 1991428.81, E 6089636.24	N 1991487.46, E 6089615.09
L2	1+06.42	3+25.00	N/A	218.58'	N/A	N/A	N7°01'39"W	N 1991530.32, E 6089605.13	N 1991747.25, E 6089578.38

KEY NOTES:

1. SEE DETAIL 1 ON S-2 FOR END OF FLOODWALL CONNECTION.
2. CONSTRUCT STOP LOG CLOSURE PER DETAIIL ON SHEET C-38.
3. SEE DETAIL 2 ON S-2 FOR BEGINNING OF FLOODWALL CONNECTION.
4. INSTALL FOLDABLE BOLLARD PER DETAIL '2' ON SHEET C-34 AT STA 69+95, DIRECTLY OVER ALIGNMENT.
5. DO NOT DISTURB (E) MITIGATION AREA. SEE TABLE ON SHEET C-49 FOR LIMITS.
6. CONTRACTOR SHALL COORDINATE WITH THE DISTRICT TO RELOCATE EXISTING SIGNS IN THIS AREA.
7. GRADE TO DRAIN.

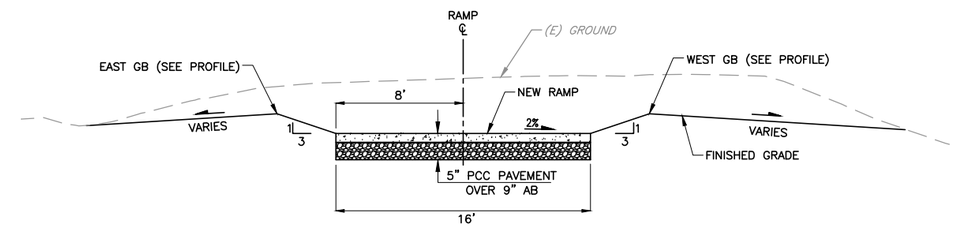

SECTION A – RAMP DETAIL
NTS

REV	DESCRIPTION	DATE	APPR.

HDR

DATE: JULY 2015
DESIGN: L. JONES
DRAWN: H. SUAREZ
CHECKED: P. HRADILEK

ENGINEERING CERTIFICATION
REGISTERED PROFESSIONAL ENGINEER LANCE M. JONES 08574 EXP. 12/31/12 CIVIL STATE OF CALIFORNIA
PROJECT ENGINEER DATE

SAN FRANCISQUITO CREEK JOINT POWERS AUTHORITY
ACCEPTED BY DISTRICT
PROJECT ENGINEER DATE

PROJECT NAME AND SHEET DESCRIPTION:
SAN FRANCISQUITO CREEK FLOOD REDUCTION, ECOSYSTEM RESTORATION, & RECREATION PROJECT
PLAN AND PROFILE
LEFT BANK LEVEE – ACCESS RAMP

SCALE: AS SHOWN
VERIFY SCALES: 0 1"
BAR IS ONE INCH ON ORIGINAL DRAWING IF NOT ONE INCH ON THIS SHEET, ADJUST SCALES ACCORDINGLY

PROJECT NUMBER: 130806
SHEET CODE: C-21
SHEET NUMBER: 36 OF 126

DOCUMENT NUMBER: SFC_LP-C-1028-XXXXXX

USERNAME: BillShad Tue 08 Jul 2008 09:32am
FILENAME: C:\pwworking\sec\d0171341\C-21

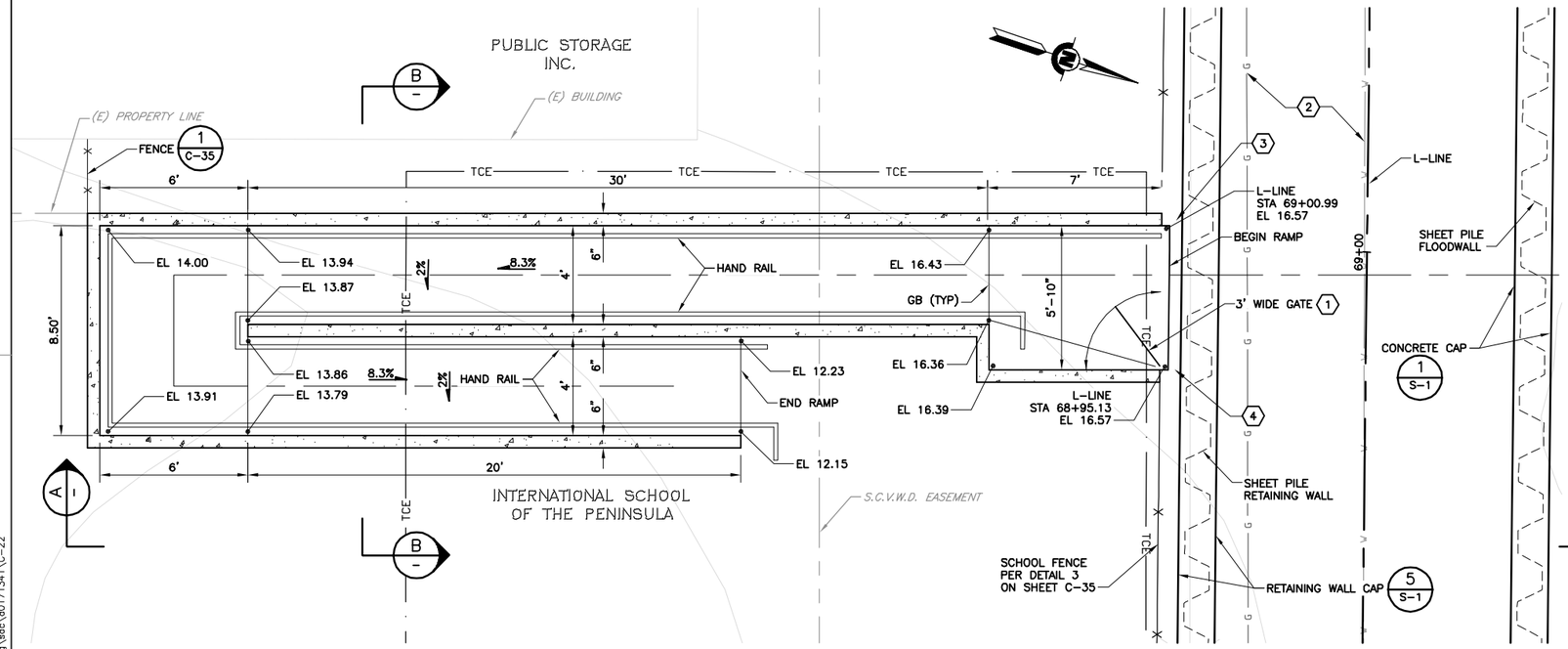

PLAN – PEDESTRIAN RAMP

SCALE: 1"=3'

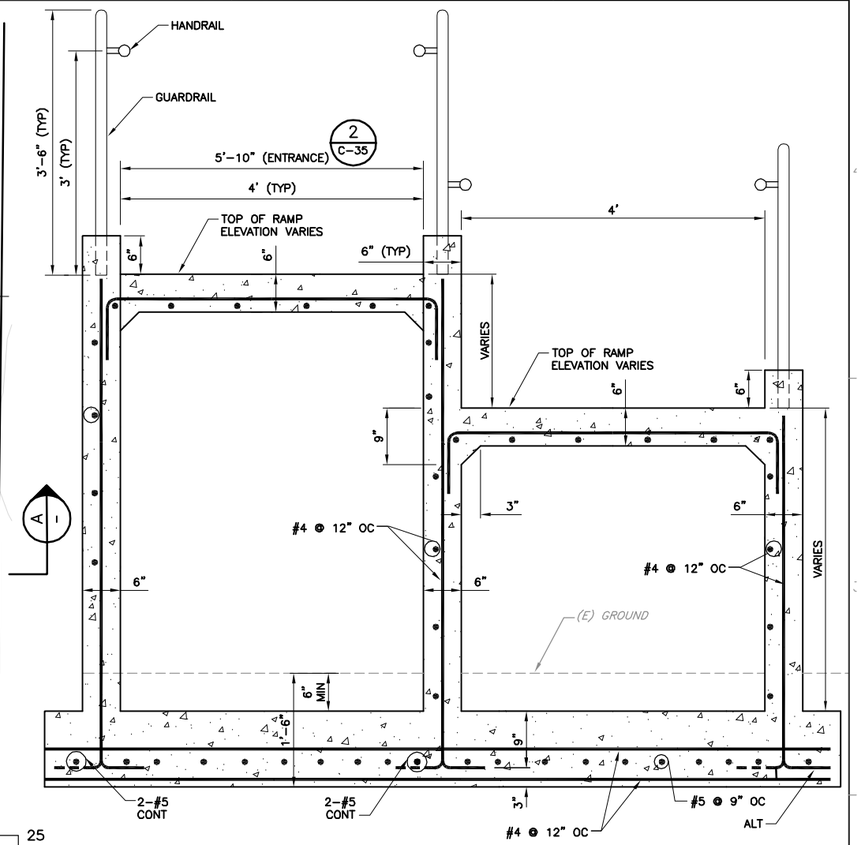

SECTION B – RAMP

SCALE: 1"=1'

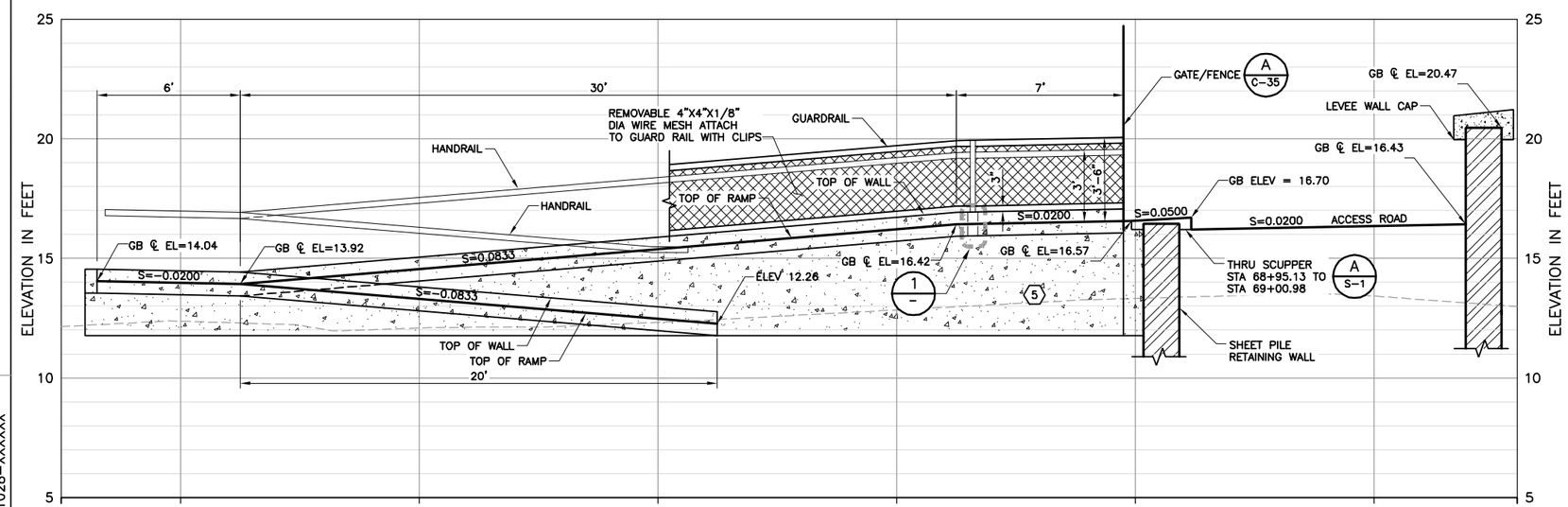

SECTION A – RAMP PROFILE

SCALE: 1"=3'

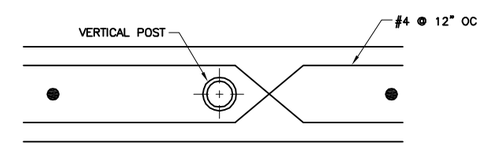

DETAIL 1 – PLAN VIEW HANDRAIL POST ANCHORAGE

NTS

KEY NOTES:

1. CONSTRUCT 3 FT WIDE GATE PER DETAIL 2 ON SHEET C-35.
2. REMOVE (E) UTILITIES PER SHEET C-46.
3. BEGIN THRU SCUPPER AT STA 69+01 PER SECTION A ON SHHET S-1.
4. END THRU SCUPPER AT STA 68+95.
5. CONCRETE: CEMENT SHALL BE TYPE B PER ASTM C150-96. READY MIXED PER ASTM C-94. MINIMUM 28 DAY COMPRESSIVE STRENGTH = 4,000 PSI.

REV	DESCRIPTION	DATE	APPR.

HDR

DATE: JULY 2015
DESIGN: L. JONES
DRAWN: H. SUAREZ
CHECKED: P. HRADILEK

ENGINEERING CERTIFICATION
REGISTERED PROFESSIONAL ENGINEER LANCE M. JONES 08574 EXP. 30/11 CIVIL STATE OF CALIFORNIA
PROJECT ENGINEER DATE

SAN FRANCISQUITO CREEK JOINT POWERS AUTHORITY

ACCEPTED BY DISTRICT
PROJECT ENGINEER DATE

PROJECT NAME AND SHEET DESCRIPTION:

SAN FRANCISQUITO CREEK FLOOD REDUCTION, ECOSYSTEM RESTORATION, & RECREATION PROJECT

PLAN AND PROFILE INTERNATIONAL SCHOOL PEDESTRIAN RAMP

SCALE: AS SHOWN
VERIFY SCALES: 0 1"
BAR IS ONE INCH ON ORIGINAL DRAWING IF NOT ONE INCH ON THIS SHEET, ADJUST SCALES ACCORDINGLY

PROJECT NUMBER: 130806
SHEET CODE: C-22
SHEET NUMBER: 37 OF 126

DOCUMENT NUMBER: SFC_LP-C-1028-XXXXXX

USERNAME: BillShad Tue 08 Jul 2008 09:32am
FILENAME: C:\pwworking\sac\d0171341\C-22

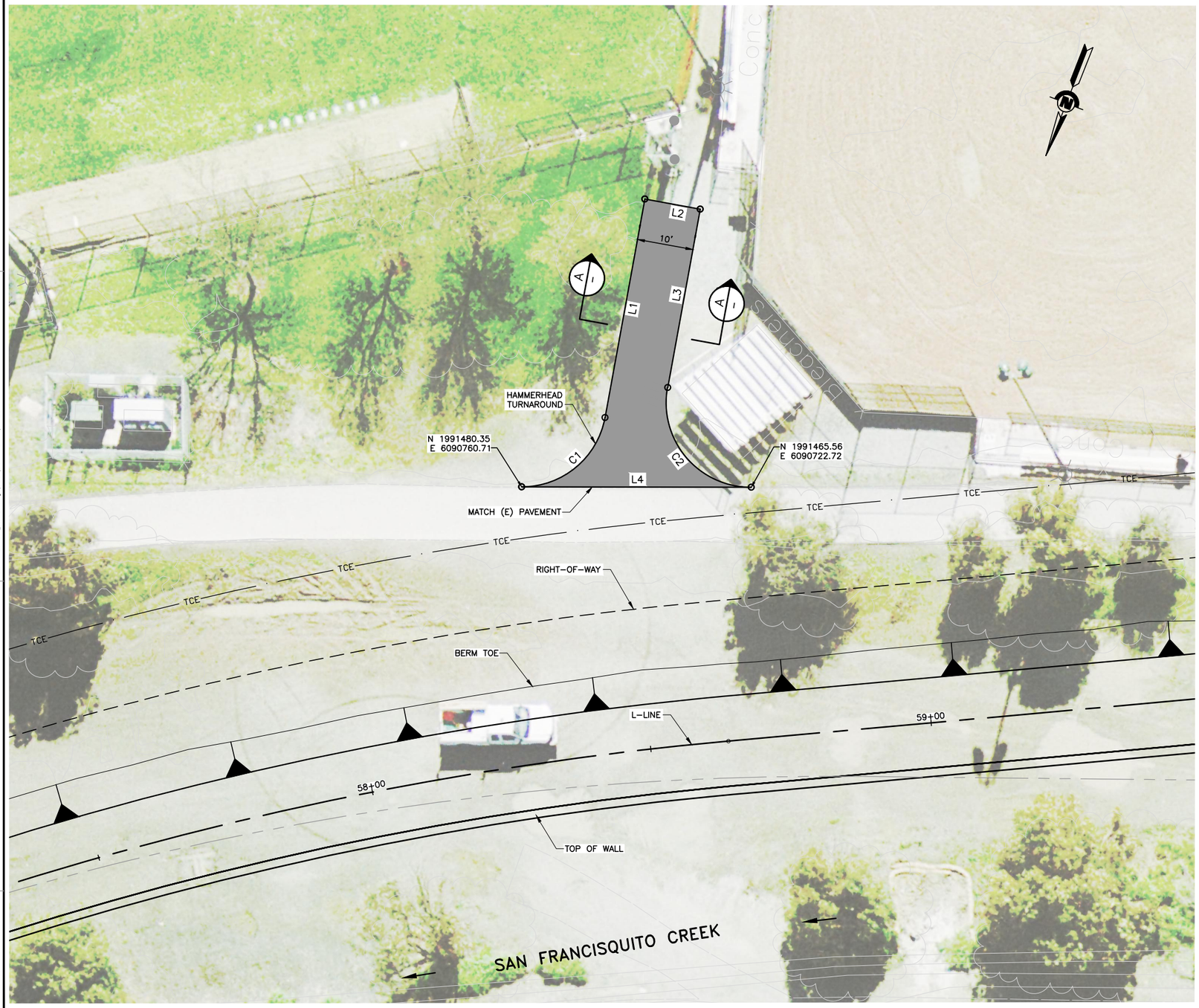

PLAN – HAMMERHEAD TURNAROUND

SCALE: 1"=10'

HAMMERHEAD LINE AND CURVE TABLE

NUMBER	START STA	END STA	CURVE PI	LENGTH	DELTA	RADIUS	LINE/CHORD BRNG
C1	–0+00.00	0+20.88	0+12.53	20.88'	79°44'21"	15.00'	S28°52'06"W
L1	0+20.88	0+60.29	N/A	39.42'	N/A	N/A	S11°00'04"E
L2	0+60.29	0+70.29	N/A	10.00'	N/A	N/A	S78°59'56"W
L3	0+70.29	1+02.47	N/A	32.18'	N/A	N/A	N11°00'04"W
C2	1+02.47	1+28.83	1+20.57	26.36'	100°41'10"	15.00'	N61°20'39"W
L4	1+28.83	1+69.59	N/A	40.76'	N/A	N/A	N68°44'17"E

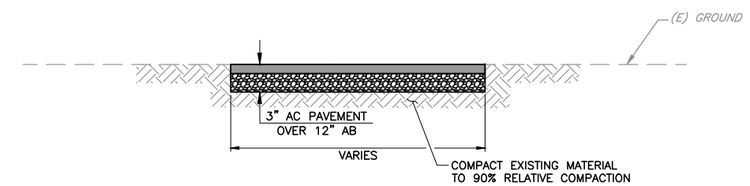

SECTION A – TYPICAL SECTION

NTS

REV	DESCRIPTION	DATE	APPR.

HDR

DATE: JULY 2015
DESIGN: L. JONES
DRAWN: H. SUAREZ
CHECKED: P. HRADILEK

ENGINEERING CERTIFICATION

REGISTERED PROFESSIONAL ENGINEER LANCE M. JONES 68574 EXP. 6/30/17 CIVIL STATE OF CALIFORNIA

PROJECT ENGINEER DATE

SAN FRANCISQUITO CREEK JOINT POWERS AUTHORITY

ACCEPTED BY DISTRICT

PROJECT ENGINEER DATE

PROJECT NAME AND SHEET DESCRIPTION:

SAN FRANCISQUITO CREEK FLOOD REDUCTION, ECOSYSTEM RESTORATION, & RECREATION PROJECT

PLAN – HAMMERHEAD TURNAROUND

SCALE: 1" = 10'

VERIFY SCALES: 0 1"

BAR IS ONE INCH ON ORIGINAL DRAWING IF NOT ONE INCH ON THIS SHEET, ADJUST SCALES ACCORDINGLY

PROJECT NUMBER: 26284002

SHEET CODE: C-23

SHEET NUMBER: 38 OF 126

DOCUMENT NUMBER: SFC_LP-C-1028-XXXXXX

USERNAME: BillShad Tue 08 Jul 2008 09:32am
FILENAME: C:\pwworking\sec\d0171341\C-23

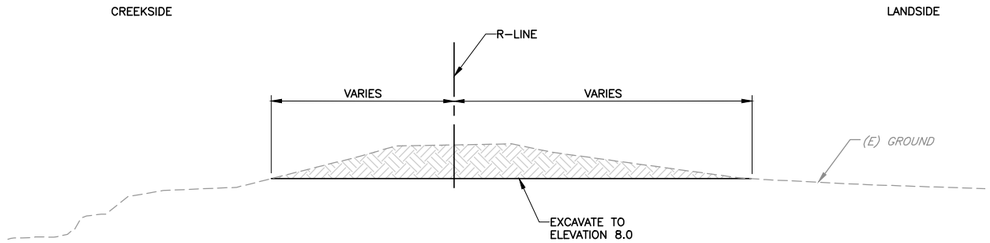

SECTION A/C-1 TYPICAL LEVEE DEGRADE SECTION – RIGHT LEVEE
NTS (R-LINE) STA 3+50 TO STA 9+50

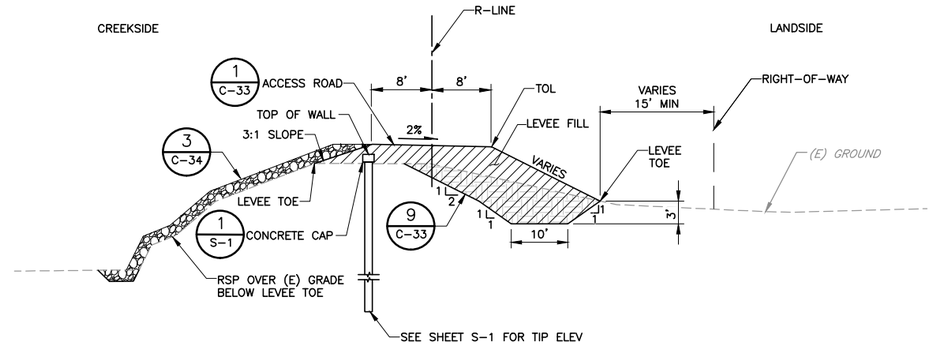

SECTION D/C-4 TYPICAL LEVEE RAISE SECTION – RIGHT LEVEE
NTS (R-LINE) STA 28+03 TO 29+54

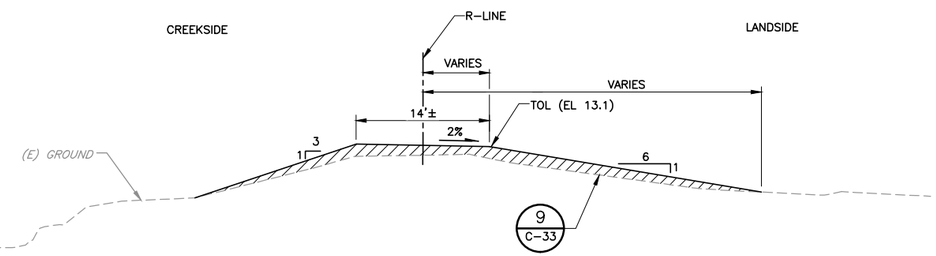

SECTION B/C-3 TYPICAL LEVEE REINFORCEMENT SECTION – RIGHT LEVEE
NTS (R-LINE) STA 21+00 TO STA 24+50

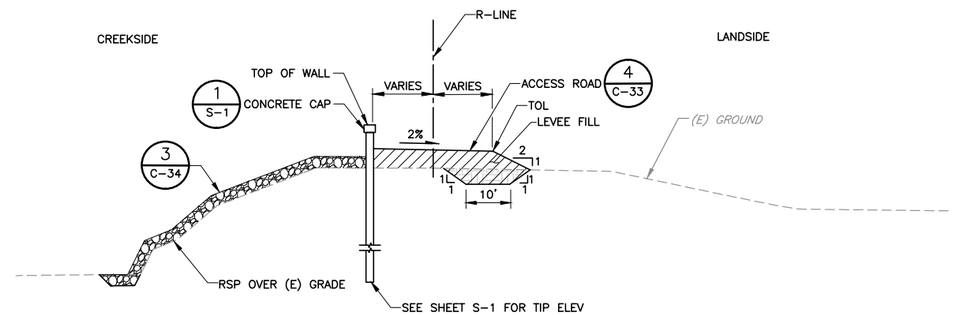

SECTION E/C-4 TYPICAL SHEET PILE FLOODWALL SECTION – RIGHT LEVEE
NTS (R-LINE) STA 29+54 TO 30+00
(R-LINE) STA 31+04 TO 31+58

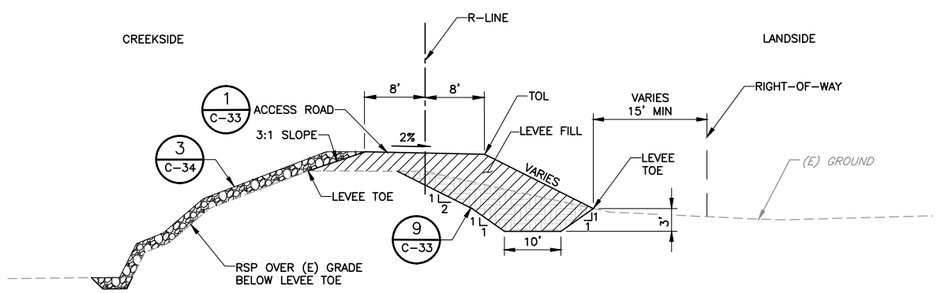

SECTION C/C-4 TYPICAL LEVEE RAISE SECTION – RIGHT LEVEE
NTS (R-LINE) STA 24+50 TO 28+03

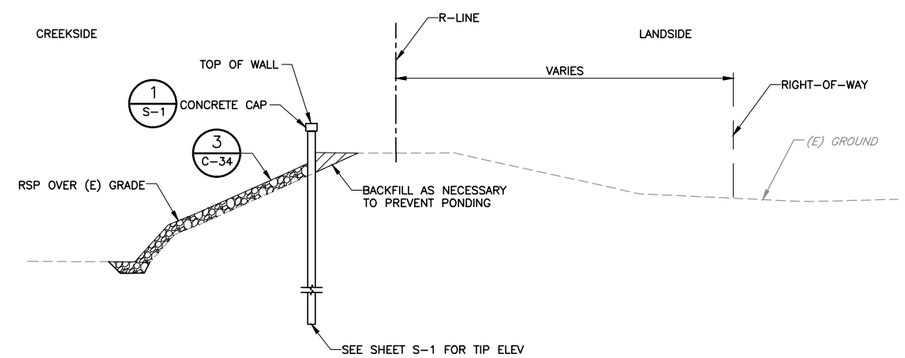

SECTION F/C-4 TYPICAL SHEET PILE FLOODWALL SECTION – RIGHT LEVEE
NTS (R-LINE) STA 30+39 TO STA 31+04

LEGEND:

- ROCK SLOPE PROTECTION
- LIMITS OF NEW LEVEE FIILL
- LIMITS OF EXCAVATION OF EXISTING LEVEE

NOTES:

1. IF SUITABLE, EXCAVATED MATERIAL SHALL BE REUSED, OR BLENDED WITH BORROW MATERIAL AND REUSED, PER SPECIFICATIONS FOR LEVEE FILL.
2. SEE PLAN AND PROFILE SHEETS FOR TOP OF LEVEE (TOL) AND LEVEE TOE ELEVATIONS.
3. ALL CROSS-SECTIONS ARE VIEWED LOOKING UPSTREAM.
4. FOR STA 30+00 TO STA 30+39 SEE SHEETS S-5 SECTION A.

REV	DESCRIPTION	DATE	APPR.

HDR

DATE JULY 2015
DESIGN L. JONES
DRAWN H. SUAREZ
CHECKED P. HRADILEK

ENGINEERING CERTIFICATION
REGISTERED PROFESSIONAL ENGINEER LANCE M. JONES 06574 EXP. 6/30/17 CIVIL STATE OF CALIFORNIA
PROJECT ENGINEER

SAN FRANCISQUITO CREEK JOINT POWERS AUTHORITY
ACCEPTED BY DISTRICT
PROJECT ENGINEER DATE

PROJECT NAME AND SHEET DESCRIPTION:
SAN FRANCISQUITO CREEK FLOOD REDUCTION, ECOSYSTEM RESTORATION, & RECREATION PROJECT
TYPICAL LEVEE SECTIONS
R-LINE

SCALE: NOT TO SCALE
VERIFY SCALES: 0 1"
BAR IS ONE INCH ON ORIGINAL DRAWING IF NOT ONE INCH ON THIS SHEET, ADJUST SCALES ACCORDINGLY

PROJECT NUMBER: 26284002
SHEET CODE: C-24
SHEET NUMBER: 39 OF 126

DOCUMENT NUMBER: SFC_LP-C-1028-XXXXXX

USERNAME: BillShad Tue 08 Jul 2008 09:32am
FILENAME: C:\pwworking\sec\d0171341\C-24

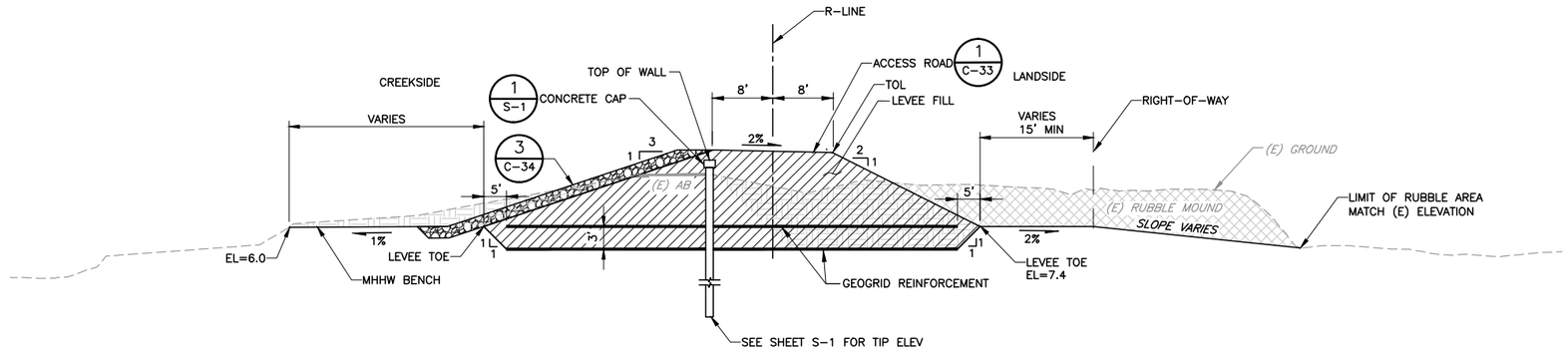

SECTION A C-5 TYPICAL DEGRADE AND REBUILD LEVEE SECTION AT RUBBLE MOUND – RIGHT LEVEE (R-LINE) STA 31+58 TO STA 33+07

NTS

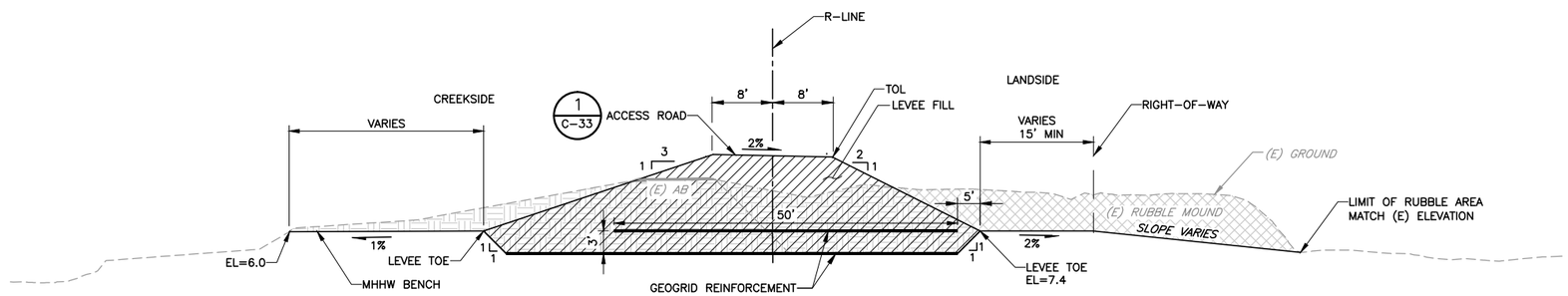

SECTION B C-5 TYPICAL DEGRADE AND REBUILD LEVEE SECTION AT RUBBLE MOUND – RIGHT LEVEE (R-LINE) STA 33+07 TO STA 42+60

NTS

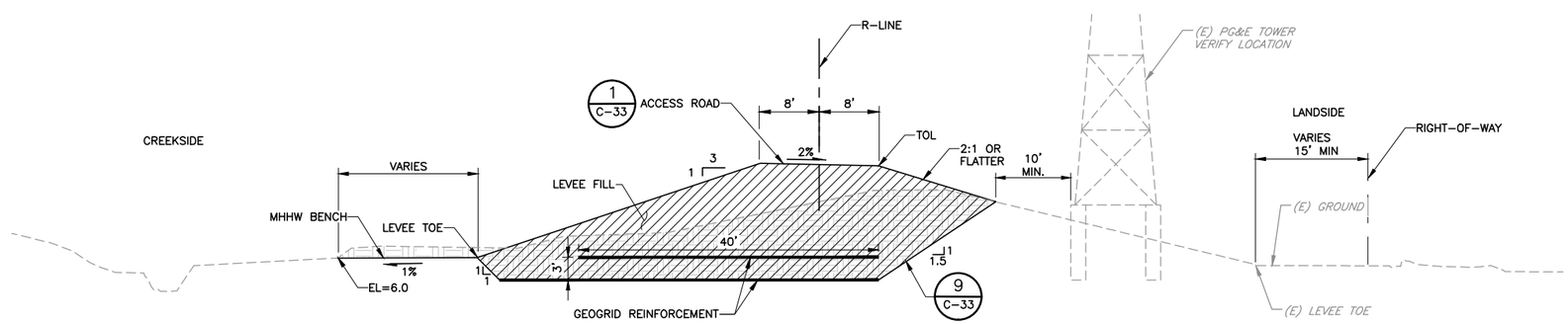

SECTION C C-6 TYPICAL DEGRADE AND REBUILD LEVEE RAISE SECTION – RIGHT LEVEE (R-LINE) STA 42+60 TO STA 43+16

NTS

LEGEND:

- ROCK SLOPE PROTECTION
- LIMITS OF NEW LEVEE FILL
- LIMITS OF EXCAVATION OF EXISTING LEVEE
- LIMITS OF EXCAVATION OF RUBBLE MOUND

NOTES:

1. IF SUITABLE, EXCAVATED MATERIAL SHALL BE REUSED, OR BLENDED WITH BORROW MATERIAL AND REUSED, PER SPECIFICATIONS FOR LEVEE FILL.
2. SEE PLAN AND PROFILE SHEETS FOR TOP OF LEVEE (TOL) AND LEVEE TOE ELEVATIONS.
3. EXISTING RUBBLE AT LANDSIDE OF LEVEE SHALL BE REMOVED OFF SITE TO AN APPROPRIATE LANDFILL PER CONTRACT SPECIFICATIONS. CONTRACTOR TO VERIFY EXTENTS OF RUBBLE IN FIELD.
4. ALL CROSS-SECTIONS ARE VIEWED LOOKING UPSTREAM.

REV	DESCRIPTION	DATE	APPR.

HDR

DATE: JULY 2015
DESIGN: L. JONES
DRAWN: H. SUAREZ
CHECKED: P. HRADILEK

ENGINEERING CERTIFICATION
REGISTERED PROFESSIONAL ENGINEER LANCE M. JONES 68574 EXP. 30/17 CIVIL STATE OF CALIFORNIA
PROJECT ENGINEER

SAN FRANCISQUITO CREEK JOINT POWERS AUTHORITY
ACCEPTED BY DISTRICT
PROJECT ENGINEER DATE

PROJECT NAME AND SHEET DESCRIPTION:
SAN FRANCISQUITO CREEK FLOOD REDUCTION, ECOSYSTEM RESTORATION, & RECREATION PROJECT
TYPICAL LEVEE SECTIONS
R-LINE

SCALE: NOT TO SCALE
VERIFY SCALES: 0 1"
BAR IS ONE INCH ON ORIGINAL DRAWING IF NOT ONE INCH ON THIS SHEET, ADJUST SCALES ACCORDINGLY

PROJECT NUMBER: 26284002
SHEET CODE: C-25
SHEET NUMBER: 40 OF 126

DOCUMENT NUMBER: SFC_LP-C-1028-XXXXXXX

USERNAME: BillShad Tue 08 Jul 2008 09:32am
FILENAME: C:\pwworking\sac\d0171341\C-25

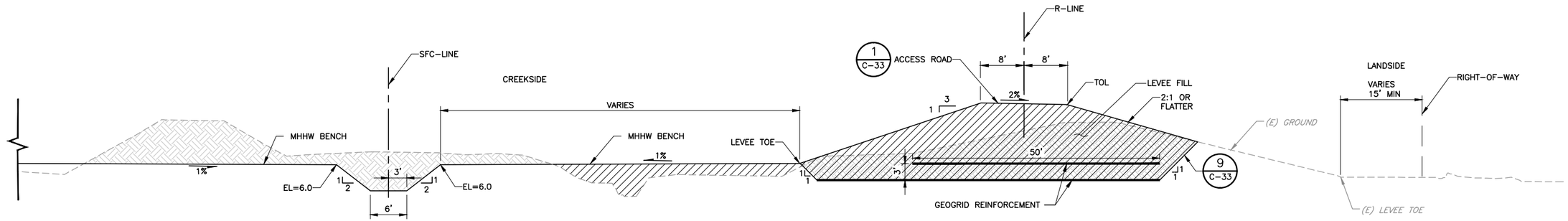

SECTION A C–6 TYPICAL DEGRADE AND REBUILD LEVEE RAISE SECTION – RIGHT LEVEE
NTS
(R–LINE) STA 43+16 TO STA 44+80

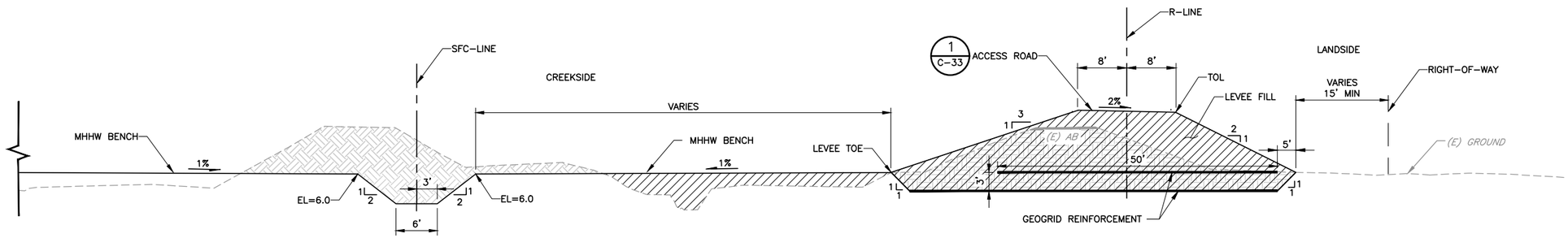

SECTION B C–6 TYPICAL DEGRADE AND REBUILD LEVEE RAISE SECTION – RIGHT LEVEE
NTS
(R–LINE) STA 44+80 TO STA 52+50

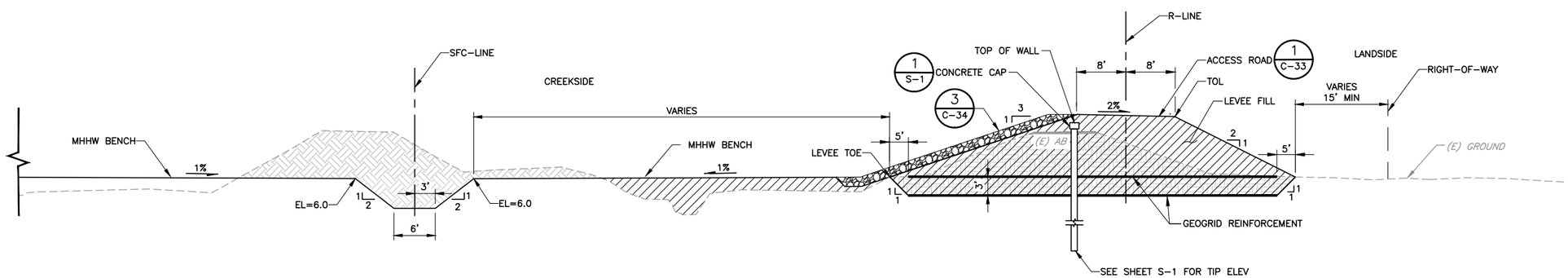

SECTION C C–7 TYPICAL DEGRADE AND REBUILD LEVEE RAISE SECTION – RIGHT LEVEE
NTS
(R–LINE) STA 52+50 TO STA 54+00

LEGEND:

- ROCK SLOPE PROTECTION
- LIMITS OF NEW LEVEE FILL
- LIMITS OF EXCAVATION OF EXISTING LEVEE

NOTES:

1. IF SUITABLE, EXCAVATED MATERIAL SHALL BE REUSED, OR BLENDED WITH BORROW MATERIAL AND REUSED, PER SPECIFICATIONS FOR LEVEE FILL.
2. SEE PLAN AND PROFILE SHEETS FOR TOP OF LEVEE (TOL) AND LEVEE TOE ELEVATIONS.
3. ALL CROSS–SECTIONS ARE VIEWED LOOKING UPSTREAM.

REV	DESCRIPTION	DATE	APPR.

HDR

DATE: JULY 2015
DESIGN: L. JONES
DRAWN: H. SUAREZ
CHECKED: P. HRADILEK

ENGINEERING CERTIFICATION
REGISTERED PROFESSIONAL ENGINEER LANCE M. JONES 065714 Exp. 06/30/17 CIVIL STATE OF CALIFORNIA
PROJECT ENGINEER

SAN FRANCISQUITO CREEK JOINT POWERS AUTHORITY
ACCEPTED BY DISTRICT
PROJECT ENGINEER DATE

PROJECT NAME AND SHEET DESCRIPTION:
SAN FRANCISQUITO CREEK FLOOD REDUCTION, ECOSYSTEM RESTORATION, & RECREATION PROJECT
TYPICAL LEVEE SECTIONS
R–LINE

SCALE: NOT TO SCALE
VERIFY SCALES: 0 1"
BAR IS ONE INCH ON ORIGINAL DRAWING IF NOT ONE INCH ON THIS SHEET, ADJUST SCALES ACCORDINGLY

PROJECT NUMBER: 26284002
SHEET CODE: C–26
SHEET NUMBER: 41 OF 126

DOCUMENT NUMBER: SFC_LP–C–1028–XXXXXXX

USERNAME: BillShad Tue 08 Jul 2008 09:32am
FILENAME: C:\pwworking\sac\d0171341\C–26

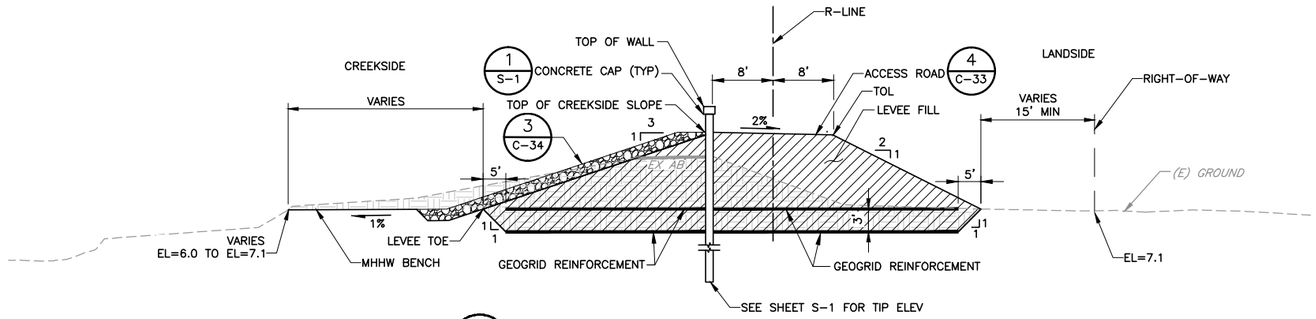

SECTION A C-7 TYPICAL LEVEE TRANSITION SECTION – RIGHT LEVEE
NTS (R-LINE) STA 54+00 TO STA 55+00

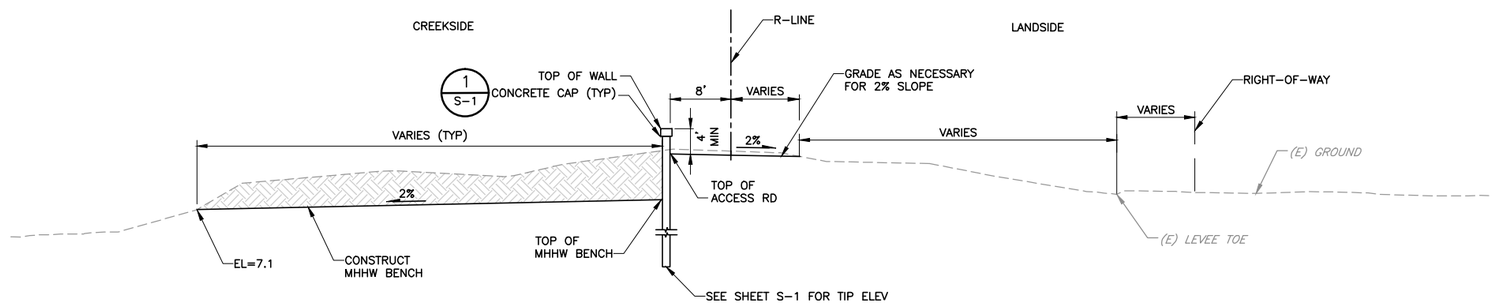

SECTION B C-7 TYPICAL SHEET PILE FLOODWALL SECTION – RIGHT LEVEE
NTS (R-LINE) STA 55+00 TO STA 58+08

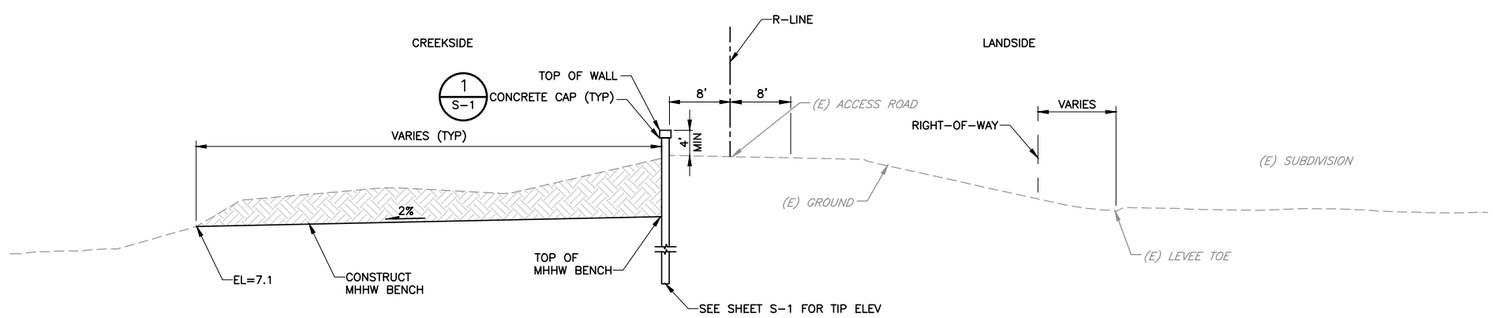

SECTION C C-8 TYPICAL SHEET PILE FLOODWALL SECTION – RIGHT LEVEE
NTS (R-LINE) STA 58+08 TO STA 68+80

LEGEND:

- ROCK SLOPE PROTECTION
- LIMITS OF NEW LEVEE FILL
- LIMITS OF EXCAVATION OF EXISTING LEVEE
- LIMITS OF NEW ACCESS ROAD FILL

NOTES:

1. IF SUITABLE, EXCAVATED MATERIAL SHALL BE REUSED, OR BLENDED WITH BORROW MATERIAL AND REUSED, PER SPECIFICATIONS FOR LEVEE FILL.
2. SEE PLAN AND PROFILE SHEETS FOR TOP OF WALL, TOP OF ACCESS ROAD, AND TOP OF MHHW BENCH ELEVATIONS.
3. EXCAVATE BENCH AFTER SHEET PILE FLOODWALL INSTALLATION IS COMPLETE.
4. ALL CROSS-SECTIONS ARE VIEWED LOOKING UPSTREAM.
5. SEE THE DETAILED CROSS SECTIONS ON SHEETS X-13 AND X-14 FOR THE TRANSITION BETWEEN SECTIONS "A" AND "B"

REV	DESCRIPTION	DATE	APPR.

HDR

DATE: JULY 2015
DESIGN: L. JONES
DRAWN: H. SUAREZ
CHECKED: P. HRADILEK

ENGINEERING CERTIFICATION
REGISTERED PROFESSIONAL ENGINEER LANCE M. JONES C065714 Exp. 6/30/17 STATE OF CALIFORNIA CIVIL
PROJECT ENGINEER

SAN FRANCISQUITO CREEK JOINT POWERS AUTHORITY
ACCEPTED BY DISTRICT
PROJECT ENGINEER DATE

PROJECT NAME AND SHEET DESCRIPTION:
SAN FRANCISQUITO CREEK FLOOD REDUCTION, ECOSYSTEM RESTORATION, & RECREATION PROJECT
TYPICAL LEVEE SECTIONS
R-LINE

SCALE: NOT TO SCALE
VERIFY SCALES: 0 1"
BAR IS ONE INCH ON ORIGINAL DRAWING IF NOT ONE INCH ON THIS SHEET, ADJUST SCALES ACCORDINGLY

PROJECT NUMBER: 26284002
SHEET CODE: C-27
SHEET NUMBER: 42 OF 126

DOCUMENT NUMBER: SFC_LP-C-1028-XXXXXXX

USERNAME: BillShad Tue 08 Jul 2008 09:32am
FILENAME: C:\pwworking\sac\d0171341\C-27

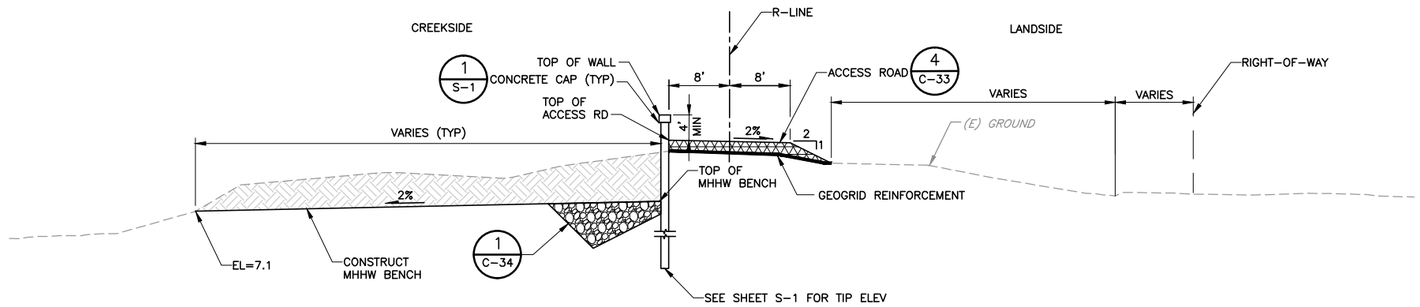

SECTION A C-9 TYPICAL SHEET PILE FLOODWALL SECTION – RIGHT LEVEE (R-LINE) STA 68+80 TO STA 75+54

NTS

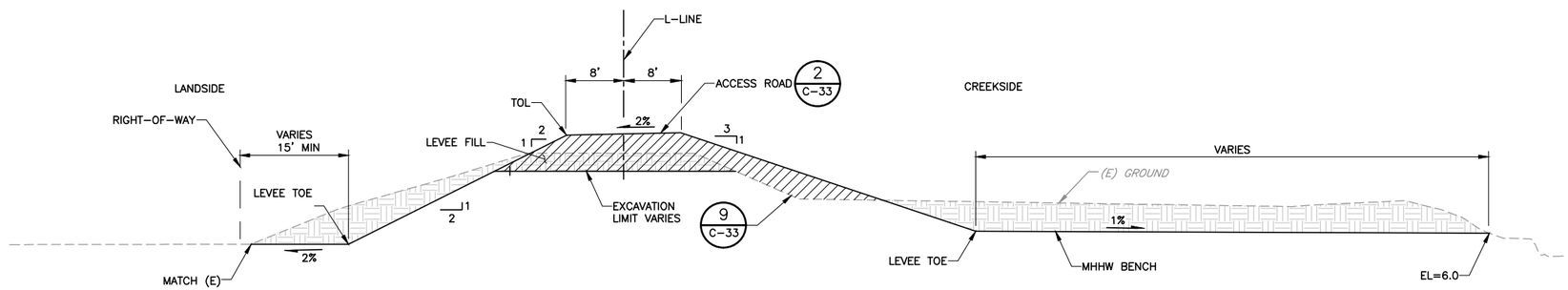

SECTION B C-12 TYPICAL NEW LEVEE SECTION – LEFT LEVEE (L-LINE) STA 22+73 TO STA 23+13

NTS

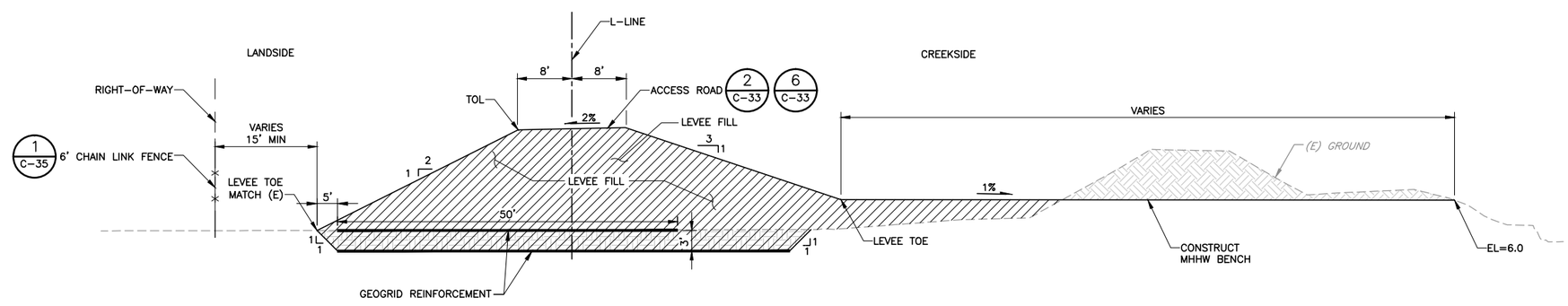

SECTION C C-12 TYPICAL NEW LEVEE SECTION – LEFT LEVEE (L-LINE) STA 23+13 TO STA 26+50 (L-LINE) STA 29+50 TO STA 39+77

NTS

LEGEND:

- ROCK SLOPE PROTECTION
- LIMITS OF NEW LEVEE FILL
- LIMITS OF EXCAVATION OF EXISTING LEVEE
- LIMITS OF NEW ACCESS ROAD FILL

NOTES:

1. IF SUITABLE, EXCAVATED MATERIAL SHALL BE REUSED, OR BLENDED WITH BORROW MATERIAL AND REUSED, PER SPECIFICATIONS FOR LEVEE FILL.
2. SEE PLAN AND PROFILE SHEETS FOR TOP OF LEVEE (TOL), LEVEE TOE, TOP OF WALL, TOP OF ACCESS ROAD, AND TOP OF MHHW BENCH ELEVATIONS.
3. ALL CROSS-SECTIONS ARE VIEWED LOOKING UPSTREAM.

REV	DESCRIPTION	DATE	APPR.

HDR

DATE	JULY 2015
DESIGN	L. JONES
DRAWN	H. SUAREZ
CHECKED	P. HRADILEK

ENGINEERING CERTIFICATION

REGISTERED PROFESSIONAL ENGINEER LANCE M. JONES C-65744 Exp. 6/30/11 CIVIL STATE OF CALIFORNIA

PROJECT ENGINEER

SAN FRANCISQUITO CREEK JOINT POWERS AUTHORITY

ACCEPTED BY DISTRICT

PROJECT ENGINEER DATE

PROJECT NAME AND SHEET DESCRIPTION:

SAN FRANCISQUITO CREEK FLOOD REDUCTION, ECOSYSTEM RESTORATION, & RECREATION PROJECT

TYPICAL LEVEE SECTIONS
L-LINE

SCALE	PROJECT NUMBER
NOT TO SCALE	26284002
VERIFY SCALES 0 1" BAR IS ONE INCH ON ORIGINAL DRAWING IF NOT ONE INCH ON THIS SHEET, ADJUST SCALES ACCORDINGLY	SHEET CODE: C-28
	SHEET NUMBER: 43 OF 126

DOCUMENT NUMBER: SFC_LP-C-1028-XXXXXXX

USERNAME: BillShad Tue 08 Jul 2008 09:32am
FILENAME: C:\pwworking\sac\d0171341\C-28

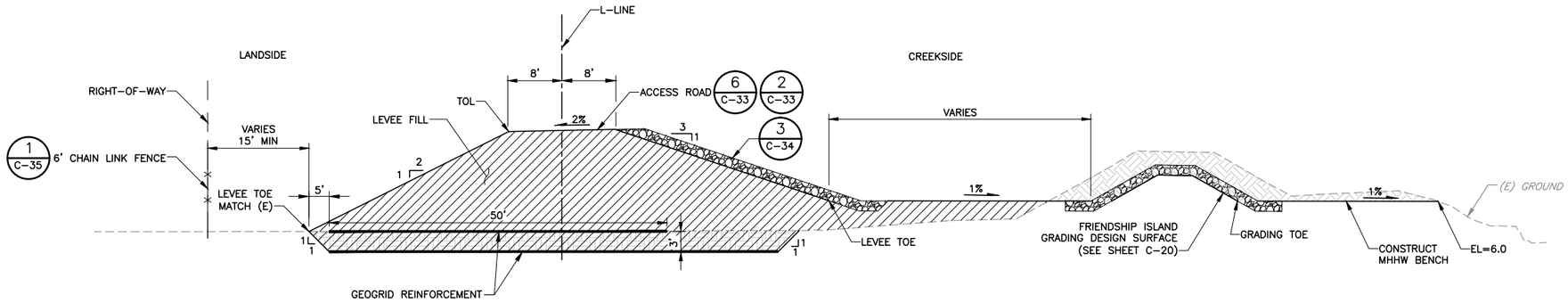

SECTION A C-12 TYPICAL NEW LEVEE SECTION – LEFT LEVEE
NTS (L-LINE) STA 26+50 TO STA 29+50

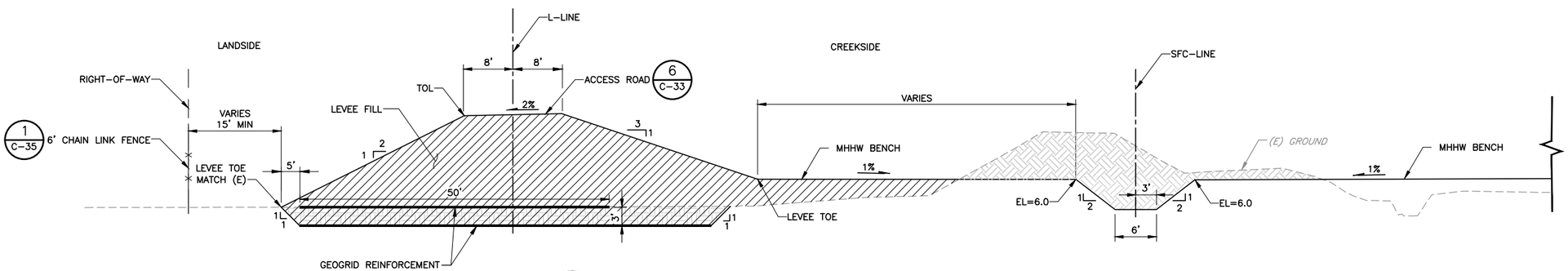

SECTION B C-14 TYPICAL NEW LEVEE SECTION – LEFT LEVEE
NTS (L-LINE) STA 39+77 TO STA 46+75

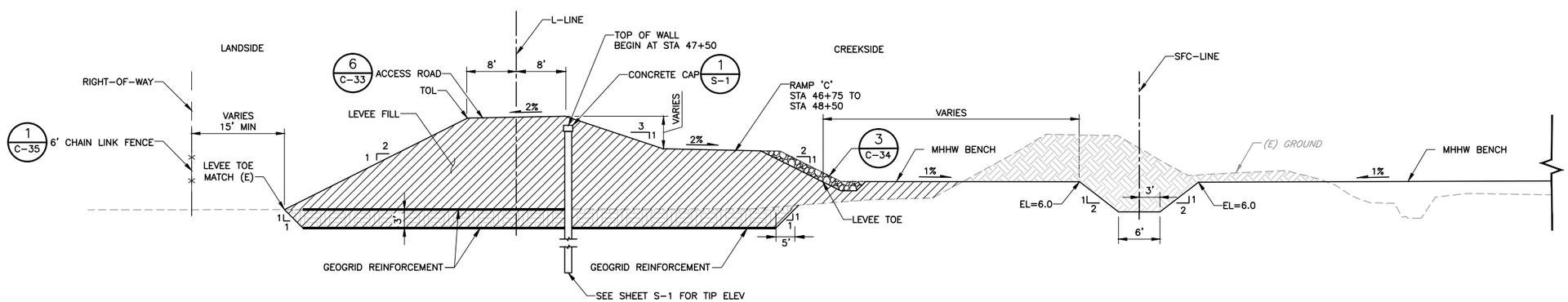

SECTION C C-14 TYPICAL NEW LEVEE SECTION – LEFT LEVEE
NTS (L-LINE) STA 46+75 TO STA 49+00

LEGEND:

- ROCK SLOPE PROTECTION
- LIMITS OF NEW LEVEE FILL
- LIMITS OF EXCAVATION OF EXISTING LEVEE
- LIMITS OF NEW ACCESS ROAD FILL

NOTES:

1. IF SUITABLE, EXCAVATED MATERIAL SHALL BE REUSED, OR BLENDED WITH BORROW MATERIAL AND REUSED, PER SPECIFICATIONS FOR LEVEE FILL.
2. SEE PLAN AND PROFILE SHEETS FOR TOP OF LEVEE (TOL), LEVEE TOE, TOP OF WALL, TOP OF ACCESS ROAD, AND TOP OF MHHW BENCH ELEVATIONS.
3. ALL CROSS-SECTIONS ARE VIEWED LOOKING UPSTREAM.

REV	DESCRIPTION	DATE	APPR.

HDR

DATE: JULY 2015
DESIGN: L. JONES
DRAWN: H. SUAREZ
CHECKED: P. HRADILEK

ENGINEERING CERTIFICATION
REGISTERED PROFESSIONAL ENGINEER LANCE M. JONES 68574 Exp. 6/30/17 CIVIL STATE OF CALIFORNIA
PROJECT ENGINEER

SAN FRANCISQUITO CREEK JOINT POWERS AUTHORITY
ACCEPTED BY DISTRICT
PROJECT ENGINEER DATE

PROJECT NAME AND SHEET DESCRIPTION:
SAN FRANCISQUITO CREEK FLOOD REDUCTION, ECOSYSTEM RESTORATION, & RECREATION PROJECT
TYPICAL LEVEE SECTIONS
L-LINE

SCALE: NOT TO SCALE
VERIFY SCALES: 0 1"
BAR IS ONE INCH ON ORIGINAL DRAWING IF NOT ONE INCH ON THIS SHEET, ADJUST SCALES ACCORDINGLY

PROJECT NUMBER: 26284002
SHEET CODE: C-29
SHEET NUMBER: 44 OF 126

DOCUMENT NUMBER: SFC_LP-C-1028-XXXXXXX

USERNAME: BillShad Tue 08 Jul 2008 09:32am
FILENAME: C:\pwworking\sec\d0171341\C-29

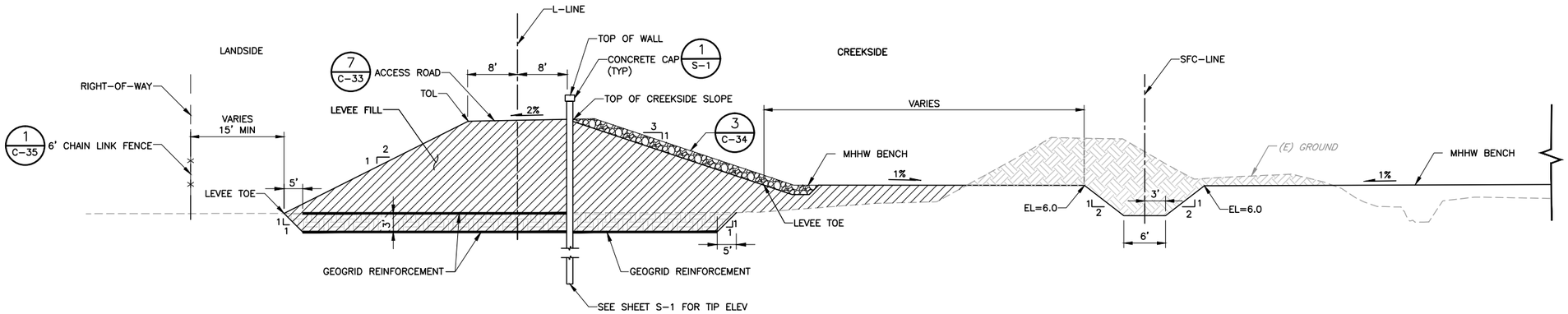

SECTION A C-15 TYPICAL LEVEE TO ACCESS ROAD TRANSITION SECTION – LEFT LEVEE

NTS (L-LINE) STA 49+00 TO STA 50+00

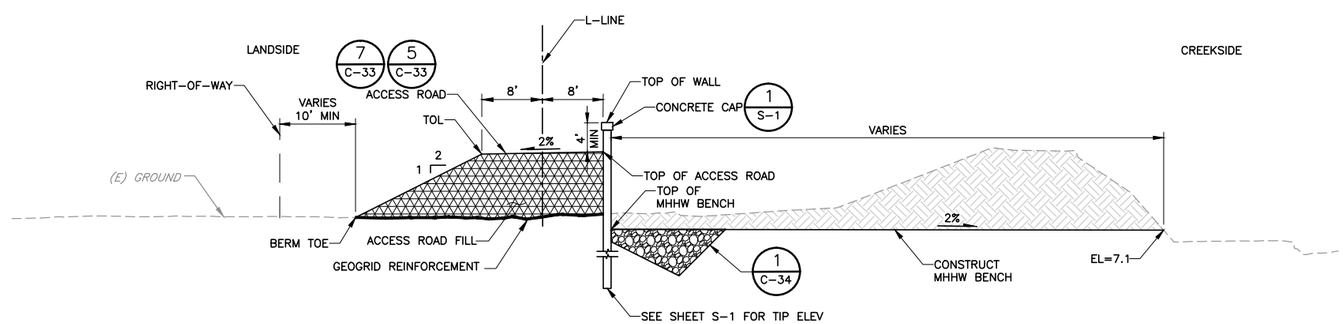

SECTION B C-15 TYPICAL SHEET PILE FLOODWALL SECTION – LEFT LEVEE

NTS (L-LINE) STA 50+00 TO STA 58+50

LEGEND:

- ROCK SLOPE PROTECTION
- LIMITS OF NEW LEVEE FILLL
- LIMITS OF EXCAVATION OF EXISTING LEVEE
- LIMITS OF NEW ACCESS ROAD FILL

NOTES:

1. IF SUITABLE, EXCAVATED MATERIAL SHALL BE REUSED, OR BLENDED WITH BORROW MATERIAL AND REUSED, PER SPECIFICATIONS FOR LEVEE OR ACCESS ROAD FILL.
2. SEE PLAN AND PROFILE SHEETS FOR TOP OF LEVEE (TOL), LEVEE TOE, TOP OF WALL, TOP OF ACCESS ROAD, AND TOP OF MHHW BENCH ELEVATIONS.
3. ALL CROSS-SECTIONS ARE VIEWED LOOKING UPSTREAM.

REV	DESCRIPTION	DATE	APPR.

HDR

DATE JULY 2015
DESIGN L. JONES
DRAWN H. SUAREZ
CHECKED P. HRADILEK

ENGINEERING CERTIFICATION
REGISTERED PROFESSIONAL ENGINEER LANCE M. JONES C 68574 Exp. 6/30/17 CIVIL STATE OF CALIFORNIA
PROJECT ENGINEER

SAN FRANCISQUITO CREEK JOINT POWERS AUTHORITY
ACCEPTED BY DISTRICT
PROJECT ENGINEER DATE

PROJECT NAME AND SHEET DESCRIPTION:
SAN FRANCISQUITO CREEK FLOOD REDUCTION, ECOSYSTEM RESTORATION, & RECREATION PROJECT
TYPICAL LEVEE SECTIONS
L-LINE

SCALE: NOT TO SCALE
VERIFY SCALES: 0 1"
BAR IS ONE INCH ON ORIGINAL DRAWING IF NOT ONE INCH ON THIS SHEET, ADJUST SCALES ACCORDINGLY

PROJECT NUMBER: 26284002
SHEET CODE: C-30
SHEET NUMBER: 45 OF 126

DOCUMENT NUMBER: SFC_LP-C-1028-XXXXXXX

USERNAME: BillShad Tue 08 Jul 2008 09:32am
FILENAME: C:\pwworking\sac\d0171341\C-30

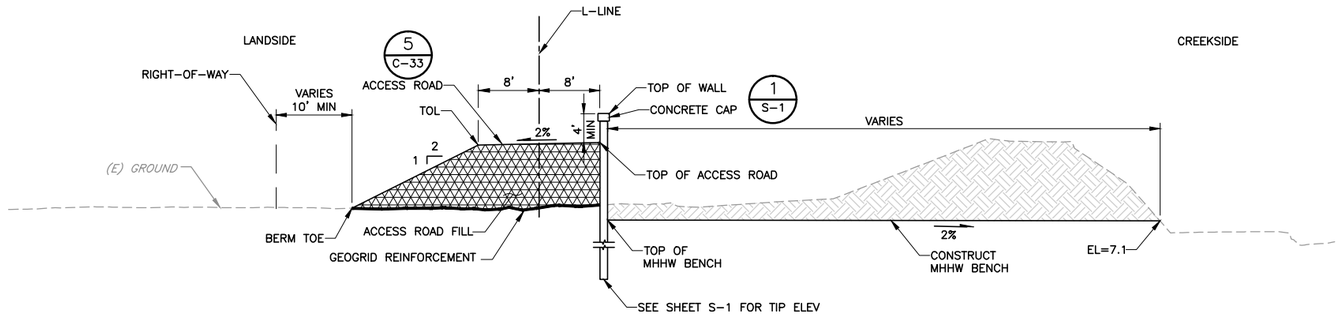

SECTION A C-16 TYPICAL SHEET PILE FLOODWALL SECTION – LEFT LEVEE
NTS (L-LINE) STA 58+50 TO STA 62+88

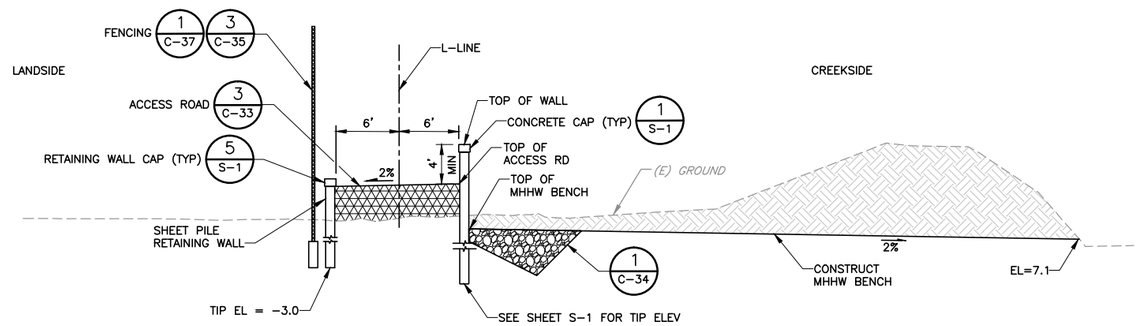

SECTION B C-16 TYPICAL FLOODWALL SECTION – LEFT LEVEE
NTS (L-LINE) STA 62+88 TO STA 67+93

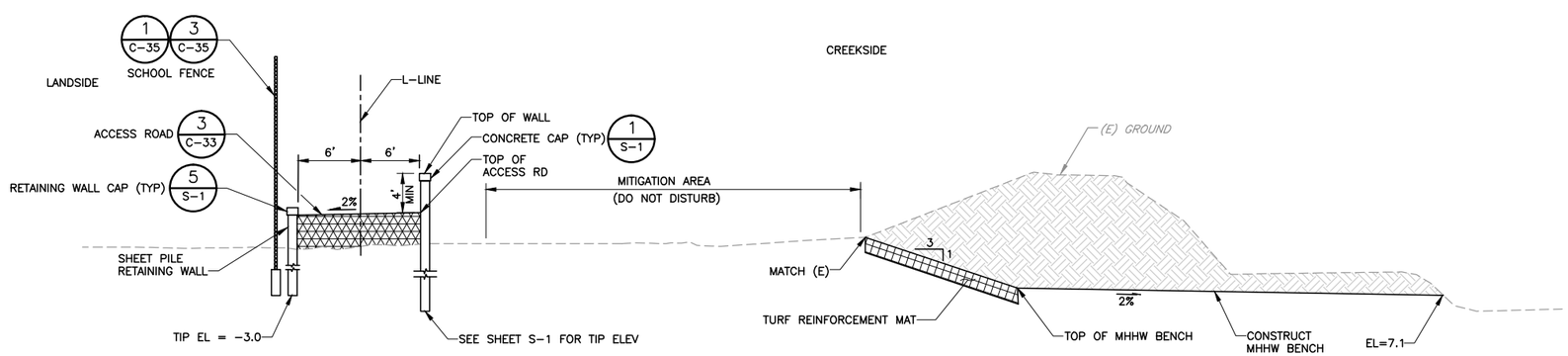

SECTION C C-17 TYPICAL FLOODWALL SECTION – LEFT LEVEE
NTS (L-LINE) STA 67+93 TO STA 69+95

LEGEND:

- ROCK SLOPE PROTECTION
- LIMITS OF NEW ACCESS ROAD FILL
- LIMITS OF EXCAVATION OF EXISTING LEVEE
- TURF REINFORCEMENT MAT

NOTES:

1. IF SUITABLE, EXCAVATED MATERIAL SHALL BE REUSED, OR BLENDED WITH BORROW MATERIAL AND REUSED, PER SPECIFICATIONS FOR LEVEE OR ACESS ROAD FILL.
2. SEE PLAN AND PROFILE SHEETS TOP OF WALL, TOP OF ACCESS ROAD, AND TOP OF MHHW BENCH ELEVATIONS.
3. ALL CROSS-SECTIONS ARE VIEWED LOOKING UPSTREAM.

REV	DESCRIPTION	DATE	APPR.

HDR

DATE: JULY 2015
DESIGN: L. JONES
DRAWN: H. SUAREZ
CHECKED: P. HRADILEK

ENGINEERING CERTIFICATION
REGISTERED PROFESSIONAL ENGINEER LANCE M. JONES C-68574 EXP. 12/31/17 CIVIL STATE OF CALIFORNIA
PROJECT ENGINEER

SAN FRANCISQUITO CREEK JOINT POWERS AUTHORITY
ACCEPTED BY DISTRICT
PROJECT ENGINEER DATE

PROJECT NAME AND SHEET DESCRIPTION:
SAN FRANCISQUITO CREEK FLOOD REDUCTION, ECOSYSTEM RESTORATION, & RECREATION PROJECT
TYPICAL LEVEE SECTIONS
L-LINE

SCALE: NOT TO SCALE
VERIFY SCALES: 0 1"
BAR IS ONE INCH ON ORIGINAL DRAWING IF NOT ONE INCH ON THIS SHEET, ADJUST SCALES ACCORDINGLY

PROJECT NUMBER: 26284002
SHEET CODE: C-31
SHEET NUMBER: 46 OF 126

DOCUMENT NUMBER: SFC_LP-C-1028-XXXXXXX

USERNAME: BillShad Tue 08 Jul 2008 09:32am
FILENAME: C:\pwworking\sac\d0171341\C-31

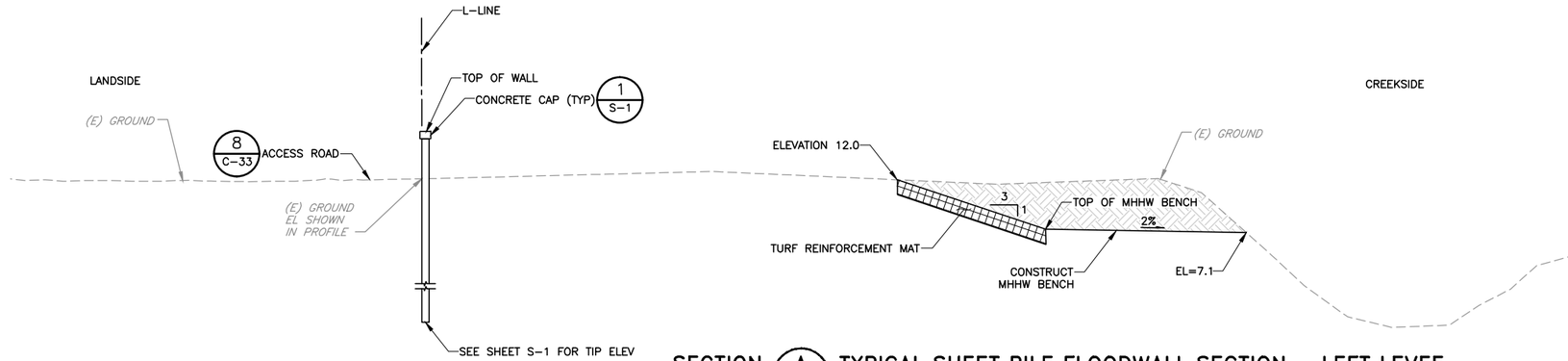

SECTION A / C-17 TYPICAL SHEET PILE FLOODWALL SECTION – LEFT LEVEE

NTS

(L-LINE) STA 69+95 TO STA 70+62
(L-LINE) STA 70+78 TO STA 71+05
(L-LINE) STA 71+57 TO STA 71+90

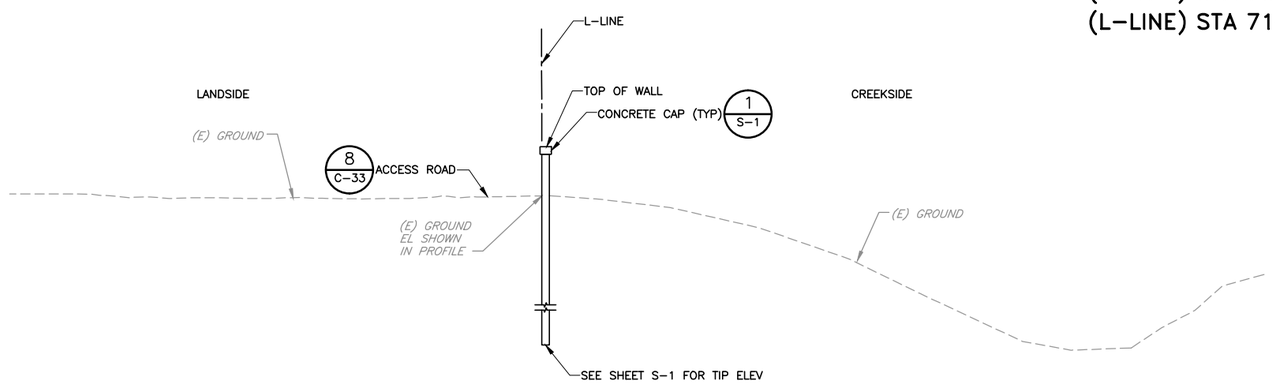

SECTION B / C-17 TYPICAL SHEET PILE FLOODWALL SECTION – LEFT LEVEE

NTS

(L-LINE) STA 71+90 TO STA 73+86

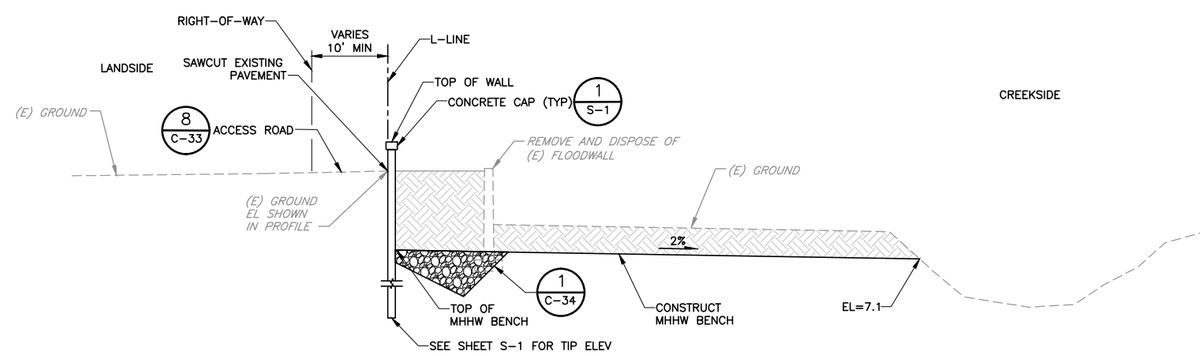

SECTION C / C-17 TYPICAL SHEET PILE FLOODWALL SECTION – LEFT LEVEE

NTS

(L-LINE) STA 73+86 TO STA 76+19

LEGEND:

- ROCK SLOPE PROTECTION
- LIMITS OF EXCAVATION OF EXISTING LEVEE
- TURF REINFORCEMENT MAT

NOTES:

1. IF SUITABLE, EXCAVATED MATERIAL SHALL BE REUSED, OR BLENDED WITH BORROW MATERIAL AND REUSED, PER SPECIFICATIONS FOR LEVEE OR ACCESS ROAD FILL.
2. SEE PLAN AND PROFILE SHEETS FOR TOP OF WALL AND TOP OF MHHW BENCH ELEVATIONS.
3. ALL CROSS-SECTIONS ARE VIEWED LOOKING UPSTREAM.
4. FOR STA 70+62 TO STA 70+78 SEE SHEET C-38.

REV	DESCRIPTION	DATE	APPR.

HDR

DATE	JULY 2015
DESIGN	L. JONES
DRAWN	H. SUAREZ
CHECKED	P. HRADILEK

ENGINEERING CERTIFICATION

REGISTERED PROFESSIONAL ENGINEER LANCE M. JONES 65374 Exp. 6/30/17 CIVIL STATE OF CALIFORNIA

PROJECT ENGINEER

SAN FRANCISQUITO CREEK JOINT POWERS AUTHORITY

ACCEPTED BY DISTRICT

PROJECT ENGINEER DATE

PROJECT NAME AND SHEET DESCRIPTION:

SAN FRANCISQUITO CREEK FLOOD REDUCTION, ECOSYSTEM RESTORATION, & RECREATION PROJECT

TYPICAL LEVEE SECTIONS
L-LINE

SCALE	PROJECT NUMBER
NOT TO SCALE	26284002

VERIFY SCALES 0 1"
BAR IS ONE INCH ON ORIGINAL DRAWING IF NOT ONE INCH ON THIS SHEET, ADJUST SCALES ACCORDINGLY

SHEET CODE: C-32

SHEET NUMBER: 47 OF 126

DOCUMENT NUMBER: SFC_LP-C-1028-XXXXXX

USERNAME: BillShad Tue 08 Jul 2008 09:32am
FILENAME: C:\pwworking\sec\d0171341\C-32

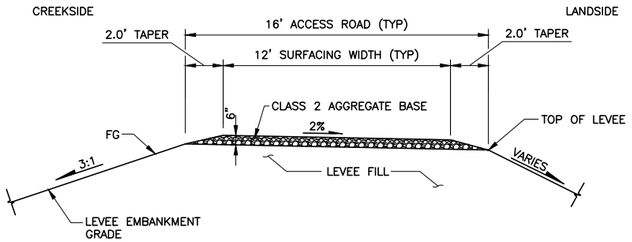

DETAIL 1 (C-24) TYPICAL ACCESS ROAD SURFACE
STA 24+50 TO 29+54 – (R-LINE)
STA 31+58 TO 54+00 – (R-LINE)
NTS

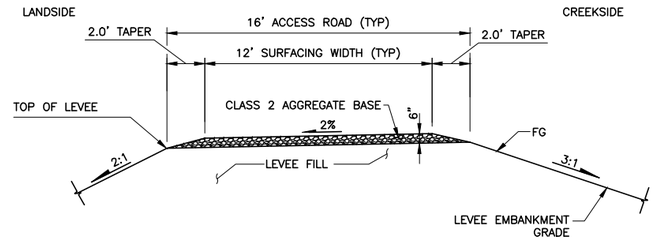

DETAIL 2 (C-28) TYPICAL ACCESS ROAD SURFACE
STA 22+73 TO 27+50 – (L-LINE)
NTS

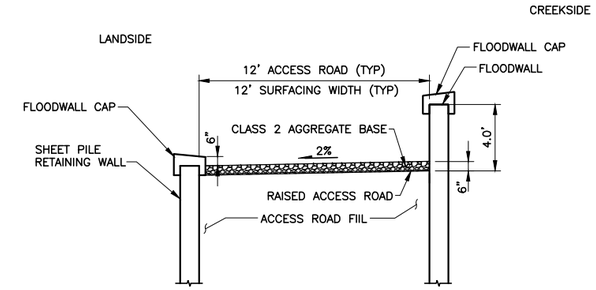

DETAIL 3 (C-31) TYPICAL ACCESS ROAD SURFACE
STA 62+88 TO 69+95 – (L-LINE)
NTS

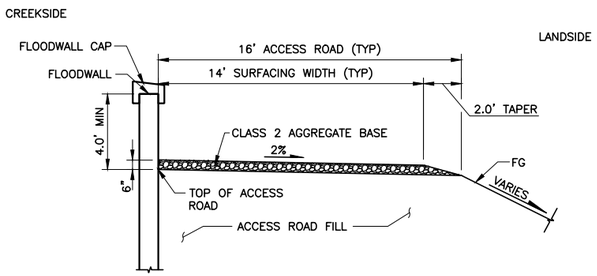

DETAIL 4 (C-27) TYPICAL ACCESS ROAD SURFACE
STA 29+54 TO 29+98 – (R-LINE)
STA 31+04 TO 31+58 – (R-LINE)
STA 54+08 TO 57+88 – (R-LINE)
STA 68+80 TO 75+54 – (R-LINE)
NTS

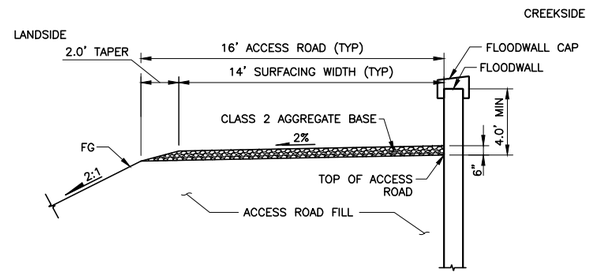

DETAIL 5 (C-30) TYPICAL ACCESS ROAD SURFACE
STA 54+08 TO 62+88 – (L-LINE)
NTS

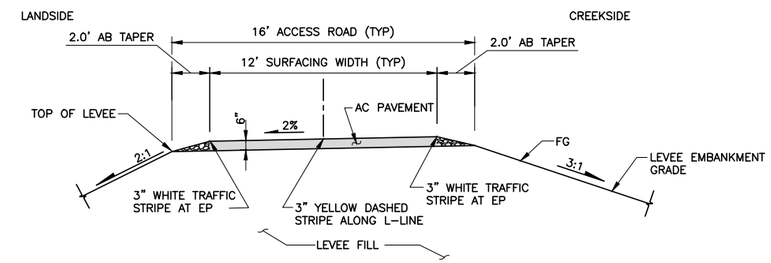

DETAIL 6 (C-28) TYPICAL ACCESS ROAD SURFACE
(BICYCLE PATH) – (L-LINE)
STA 27+50 TO 50+00
NTS

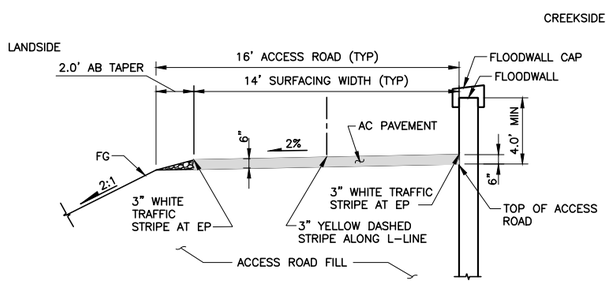

DETAIL 7 (C-30) TYPICAL ACCESS ROAD SURFACE
STA 50+00 TO 54+08 – (L-LINE)
NTS

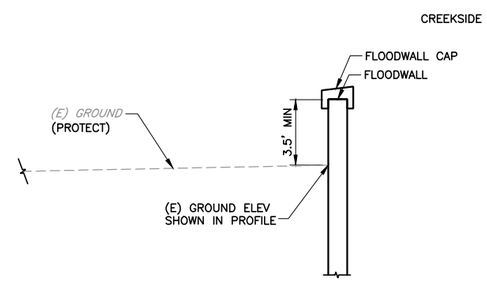

DETAIL 8 (C-32) TYPICAL ACCESS ROAD SURFACE
STA 69+95 TO 76+29 – (L-LINE)
NTS

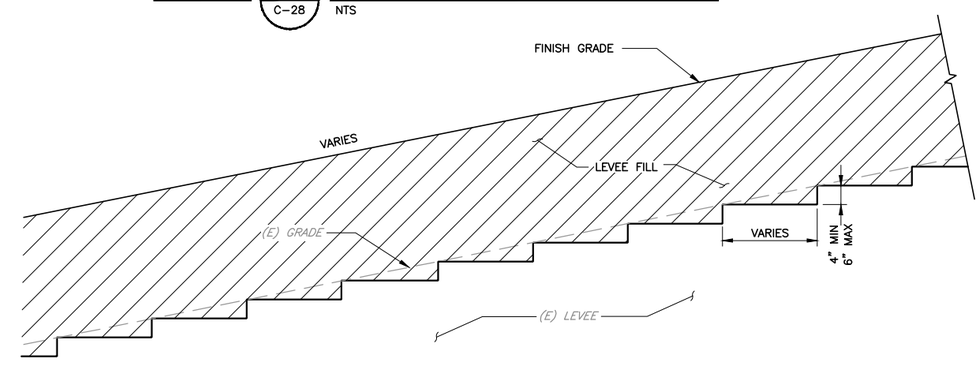

DETAIL 9 (C-24) SETBACK AND IN-PLACE LEVEE RAISED BENCHING DETAIL
NTS

REV	DESCRIPTION	DATE	APPR.

HDR

DATE JULY 2015
DESIGN S. JIMENEZ
DRAWN H. SUAREZ
CHECKED P. HRADILEK

ENGINEERING CERTIFICATION
REGISTERED PROFESSIONAL ENGINEER LANCE M. JONES 68574 Exp. 12/31/17 CIVIL STATE OF CALIFORNIA
PROJECT ENGINEER DATE

SAN FRANCISQUITO CREEK JOINT POWERS AUTHORITY
ACCEPTED BY DISTRICT
PROJECT ENGINEER DATE

PROJECT NAME AND SHEET DESCRIPTION:
SAN FRANCISQUITO CREEK FLOOD REDUCTION, ECOSYSTEM RESTORATION, & RECREATION PROJECT
TYPICAL SECTIONS

SCALE NOT TO SCALE
VERIFY SCALES 0 1"
BAR IS ONE INCH ON ORIGINAL DRAWING IF NOT ONE INCH ON THIS SHEET, ADJUST SCALES ACCORDINGLY

PROJECT NUMBER 130806
SHEET CODE: C-33
SHEET NUMBER: 48 OF 126

DOCUMENT NUMBER: SFC_LP-C-1028-XXXXXXX

USERNAME: BillShad Tue 08 Jul 2008 09:32am
FILENAME: C:\pwworking\sac\d0171341\C-33

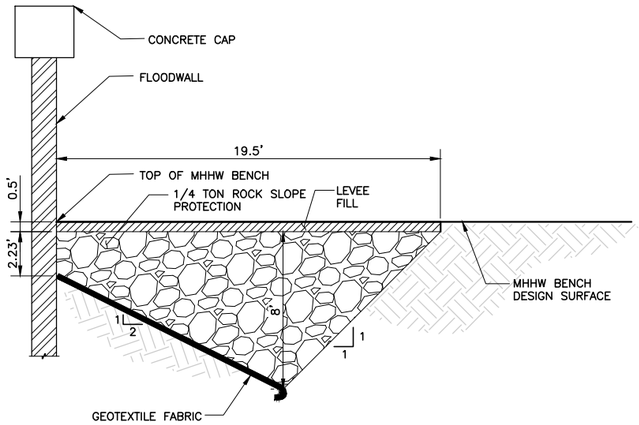

DETAIL 1 / C-28 ROCK SLOPE PROTECTION AT FLOOD WALL

NTS

TABLE 1	
STATION RANGE	ALIGNMENT
68+80 – 75+54	R-LINE
50+00 – 58+50	L-LINE
62+88 – 67+93	L-LINE
73+74 – 76+19	L-LINE

NOTE:

IF WIDTH OF MHHW BENCH IS LESS THAN 19.5', CONSTRUCT 2:1 AND 1:1 SLOPES AS SHOWN AND MODIFY RSP DEPTH ACCORDINGLY.

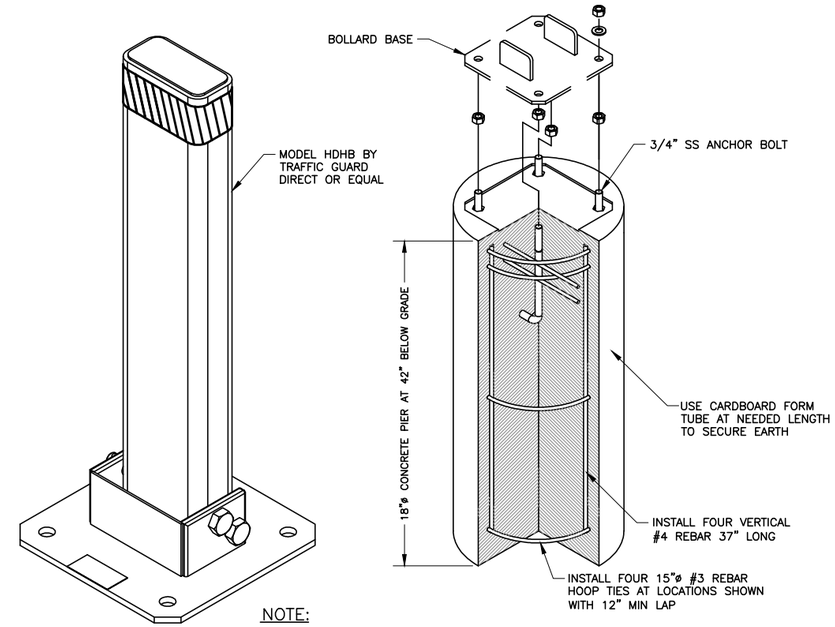

NOTE:

PAINT BOLLARD YELLOW FOR HIGH VISIBILITY

DETAIL 2 / C-18 FOLDABLE BOLLARD

NTS

TABLE 2					
STATION RANGE	ALIGNMENT	X (FT)	Y (FT)	Z (FT)	W (FT)
27+50 – 32+50	C-LINE	8	7	3	14
24+50 – 33+07	R-LINE	8	7	3	14
52+50 – 55+00	R-LINE	8	6	2	12
26+50 – 29+50	L-LINE	8	6	2	12
46+75 – 50+00	L-LINE	8	6	2	12

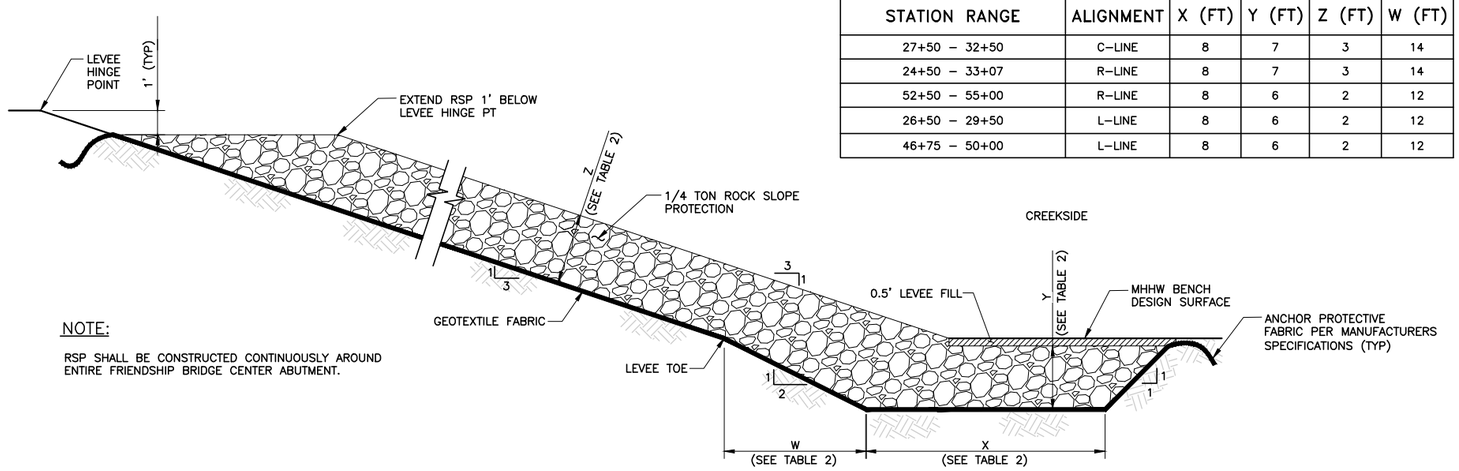

NOTE:

RSP SHALL BE CONSTRUCTED CONTINUOUSLY AROUND ENTIRE FRIENDSHIP BRIDGE CENTER ABUTMENT.

DETAIL 3 / C-24 TYPICAL SECTION – ROCK SLOPE PROTECTION

NTS

REV	DESCRIPTION	DATE	APPR.

HDR

DATE: JULY 2015
DESIGN: L. JONES
DRAWN: H. SUAREZ
CHECKED: P. HRADILEK

ENGINEERING CERTIFICATION

REGISTERED PROFESSIONAL ENGINEER LANCE M. JONES 065744 Exp. 6/30/17 CIVIL STATE OF CALIFORNIA

PROJECT ENGINEER DATE

SAN FRANCISQUITO CREEK JOINT POWERS AUTHORITY

ACCEPTED BY DISTRICT

PROJECT ENGINEER DATE

PROJECT NAME AND SHEET DESCRIPTION:

SAN FRANCISQUITO CREEK FLOOD REDUCTION, ECOSYSTEM RESTORATION, & RECREATION PROJECT

TYPICAL SECTION – ROCK SLOPE PROTECTION
DETAIL – FOLDABLE BOLLARD

SCALE: AS SHOWN

VERIFY SCALES: 0 1"
BAR IS ONE INCH ON ORIGINAL DRAWING IF NOT ONE INCH ON THIS SHEET, ADJUST SCALES ACCORDINGLY

PROJECT NUMBER: 26284002

SHEET CODE: C-34

SHEET NUMBER: 49 OF 126

DOCUMENT NUMBER: SFC_LP-C-1028-XXXXXXX

USERNAME: BillShad Tue 08 Jul 2008 09:32am
FILENAME: C:\pwworking\sac\d0171341\C-34

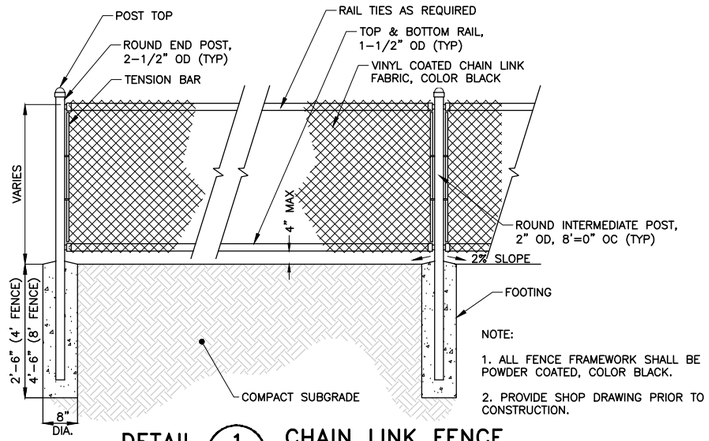

NOTE:

1. ALL FENCE FRAMEWORK SHALL BE POWDER COATED, COLOR BLACK.

2. PROVIDE SHOP DRAWING PRIOR TO CONSTRUCTION.

DETAIL 1 / C-28 CHAIN LINK FENCE

NTS

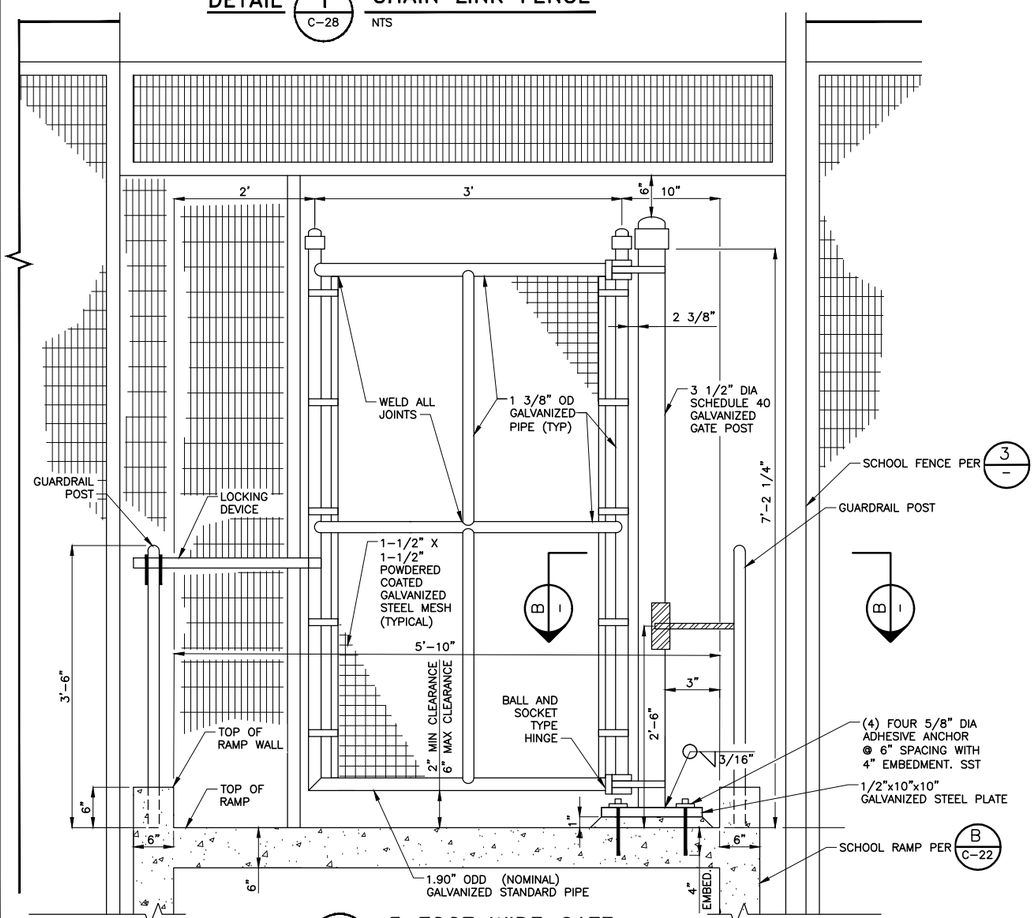

DETAIL 2 / C-22 3 FOOT WIDE GATE

NTS

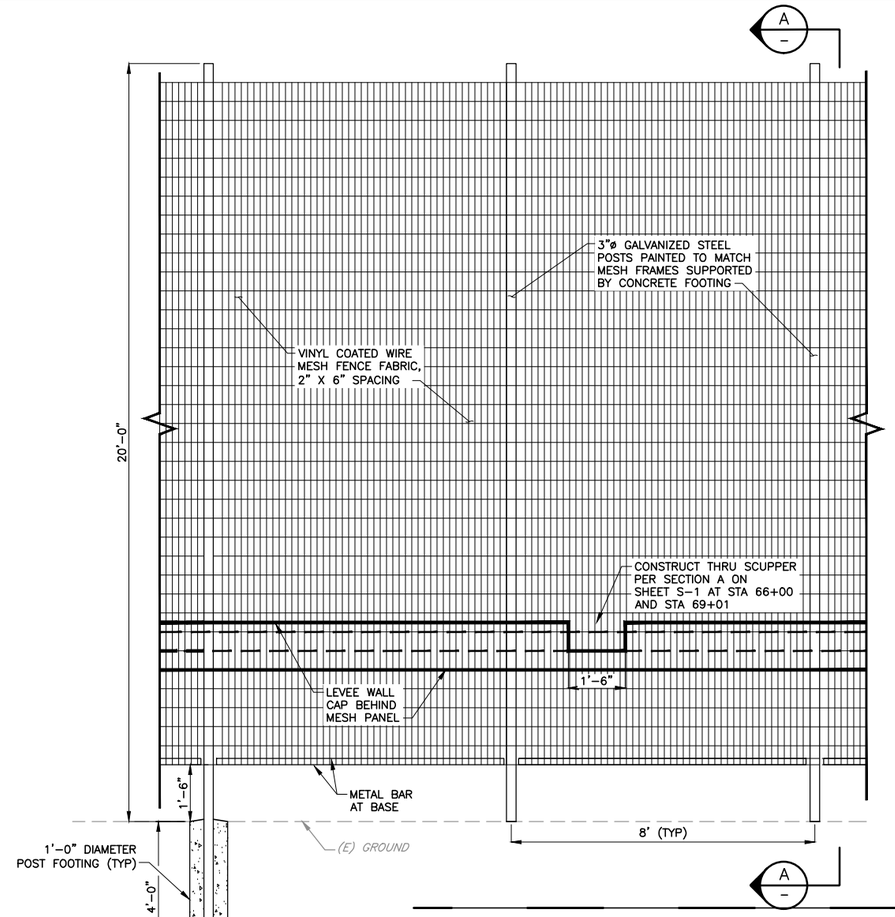

DETAIL 3 / C-31 SCHOOL FENCE DETAIL (SCHOOL YARD SIDE)

SCALE: 1" = 2'

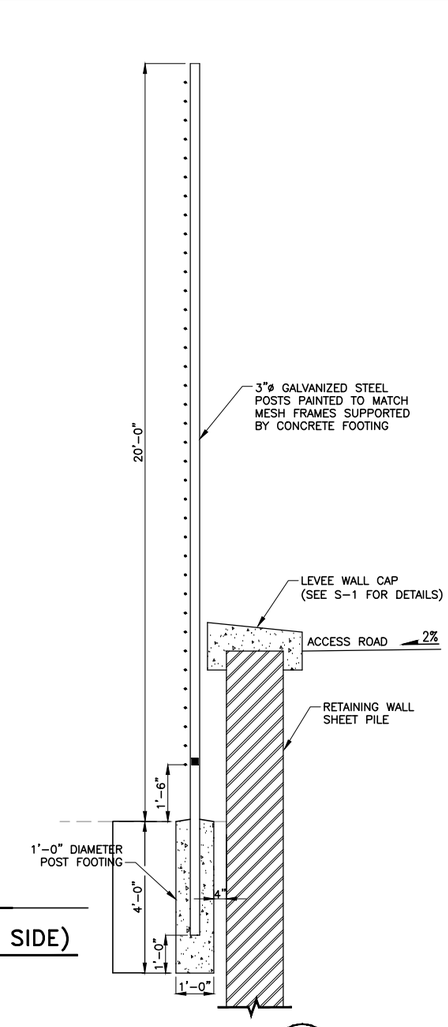

SECTION A/-

SCALE: 1" = 2'

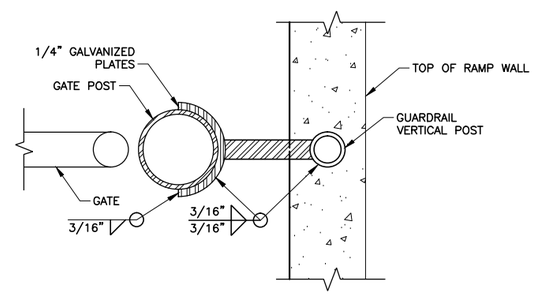

SECTION B/-

NTS

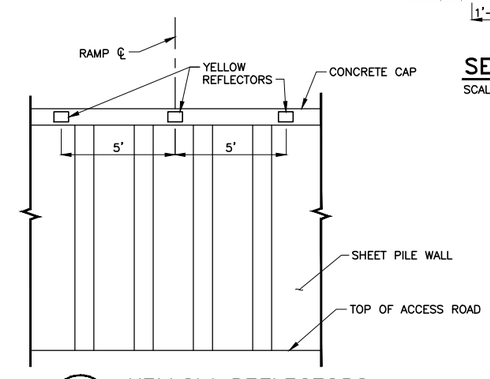

DETAIL 4 / C-18 YELLOW REFLECTORS

NTS

REV	DESCRIPTION	DATE	APPR.

HDR

DATE	JULY 2015
DESIGN	L. JONES
DRAWN	H. SUAREZ
CHECKED	P. HRADILEK

ENGINEERING CERTIFICATION

REGISTERED PROFESSIONAL ENGINEER LANCE M. JONES C 68574 Exp. 30/17 CIVIL STATE OF CALIFORNIA

PROJECT ENGINEER DATE

SAN FRANCISQUITO CREEK JOINT POWERS AUTHORITY

ACCEPTED BY DISTRICT

PROJECT ENGINEER DATE

PROJECT NAME AND SHEET DESCRIPTION:

SAN FRANCISQUITO CREEK FLOOD REDUCTION, ECOSYSTEM RESTORATION, & RECREATION PROJECT

DETAILS – FENCE

SCALE	PROJECT NUMBER
AS SHOWN	26284002
VERIFY SCALES 0 1" BAR IS ONE INCH ON ORIGINAL DRAWING IF NOT ONE INCH ON THIS SHEET, ADJUST SCALES ACCORDINGLY	SHEET CODE: C-35
	SHEET NUMBER: 50 OF 126

DOCUMENT NUMBER: SFC_LP-C-1028-XXXXXXX

USERNAME: BillShad Tue 08 Jul 2008 09:32am
FILENAME: C:\pwworking\sec\d0171341\C-35

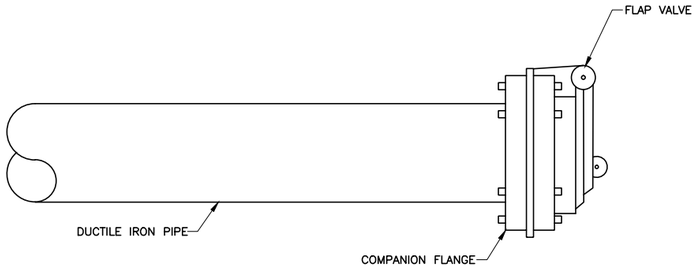

DETAIL 1 – FLAP GATE DETAIL
NTS

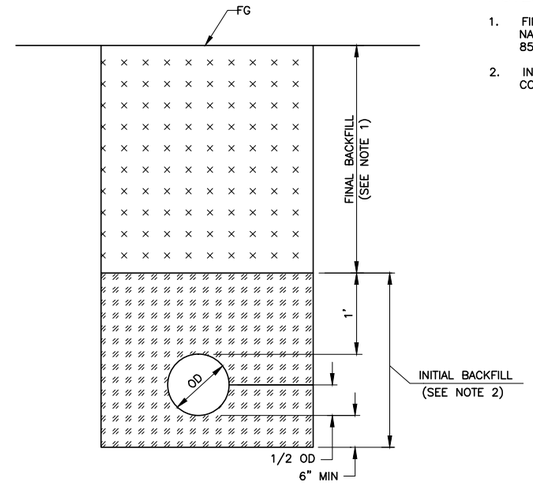

SECTION C – TYPICAL TRENCH – NEW UTILITIES
NTS

NOTES:

1. FINAL BACKFILL SHALL CONSIST OF NATIVE TRENCH SPOILS COMPACTED TO 85% RELATIVE COMPACTION.
2. INITIAL BACKFILL SHALL CONSIST OF CONTROLLED LOW STRENGTH MATERIAL.

LEGEND:

NEW UTILITY TRENCH FINAL BACKFILL

NEW UTILITY TRENCH INITIAL BACKFILL

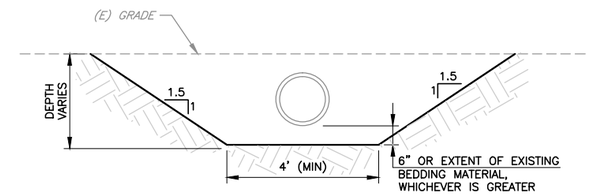

SECTION A – PIPE REMOVAL BENEATH LEVEE FOOTPRINT
C-42
NTS

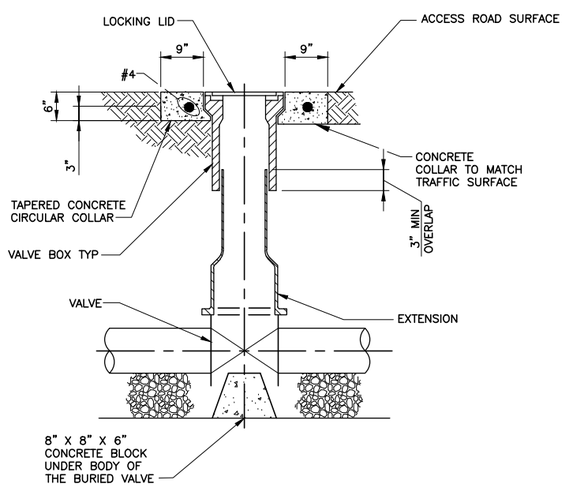

DETAIL 2 – BURIED VALVE BOX
NTS

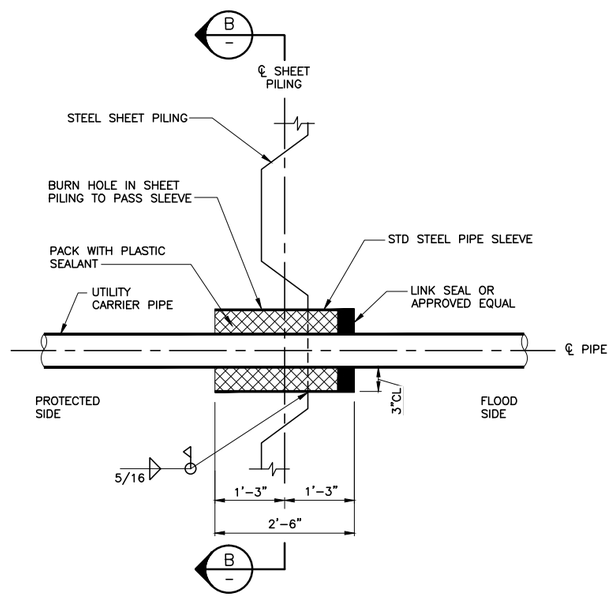

DETAIL 3 – PIPE PENETRATION OPENING
C-48
NTS

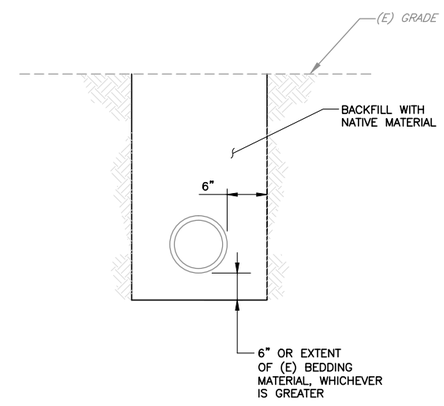

SECTION D – PIPE REMOVAL OUTSIDE LEVEE FOOTPRINT
C-42
NTS

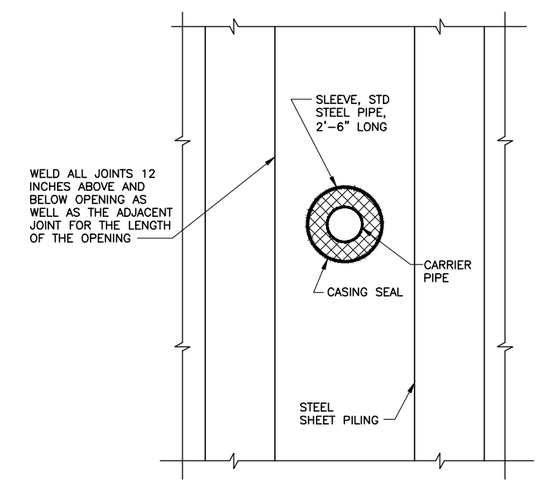

SECTION B – PIPE PENETRATION OPENING
NTS

REV	DESCRIPTION	DATE	APPR.

HDR

DATE: JULY 2015
DESIGN: S. JIMENEZ
DRAWN: H. SUAREZ
CHECKED: P. HRADILEK

ENGINEERING CERTIFICATION
REGISTERED PROFESSIONAL ENGINEER LANCE M. JONES 68574 EXP. 12/31/11 CIVIL STATE OF CALIFORNIA
PROJECT ENGINEER DATE

SAN FRANCISQUITO CREEK JOINT POWERS AUTHORITY
ACCEPTED BY DISTRICT
PROJECT ENGINEER DATE

PROJECT NAME AND SHEET DESCRIPTION:
SAN FRANCISQUITO CREEK FLOOD REDUCTION, ECOSYSTEM RESTORATION, & RECREATION PROJECT
DETAILS – PIPES

SCALE: NOT TO SCALE
VERIFY SCALES: 0 1"
BAR IS ONE INCH ON ORIGINAL DRAWING IF NOT ONE INCH ON THIS SHEET, ADJUST SCALES ACCORDINGLY

PROJECT NUMBER: 130806
SHEET CODE: C-36
SHEET NUMBER: 51 OF 126

DOCUMENT NUMBER: SFC_LP-C-1028-XXXXXXX

USERNAME: BillShad Tue 08 Jul 2008 09:32am
FILENAME: C:\pwworking\sac\d0171341\C-36

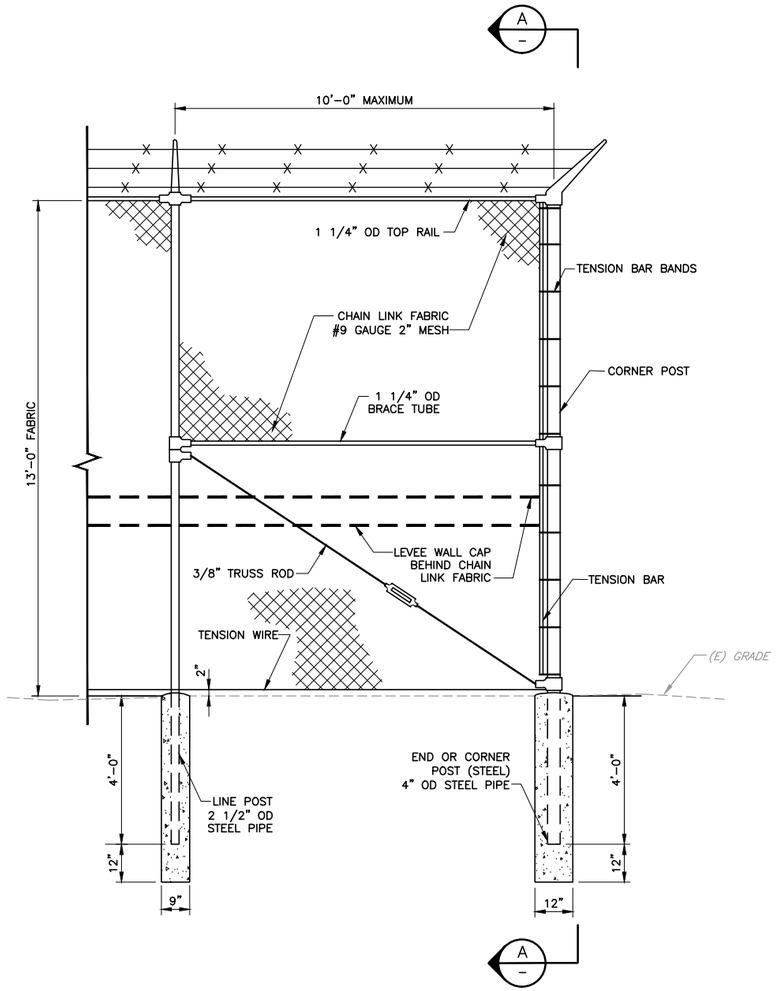

DETAIL 1 / C-31 SECURITY FENCE

SCALE: 1" = 2'

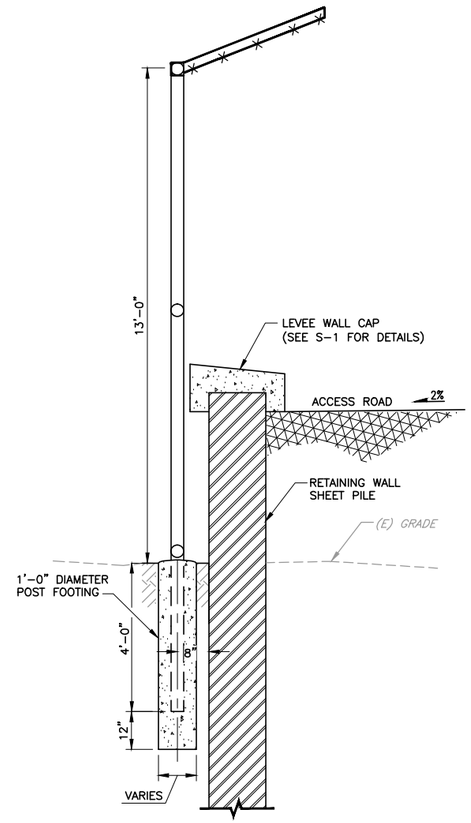

SECTION A

SCALE: 1" = 2'

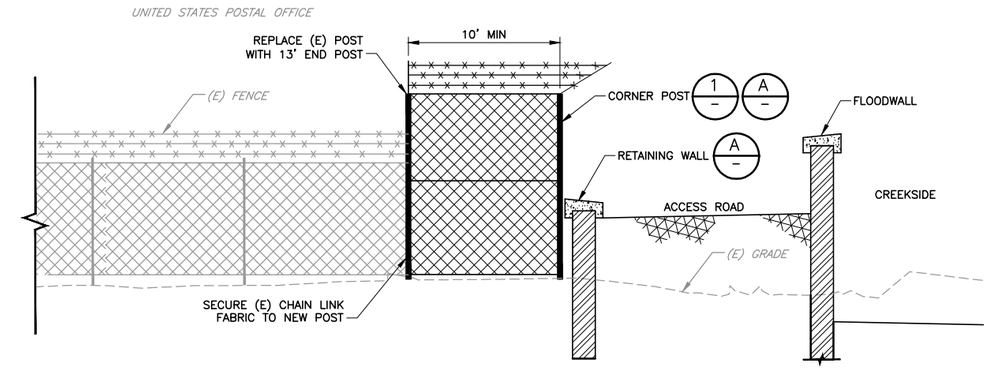

SECTION B CONNECTION TO EXISTING FENCE AT POST OFFICE

NTS

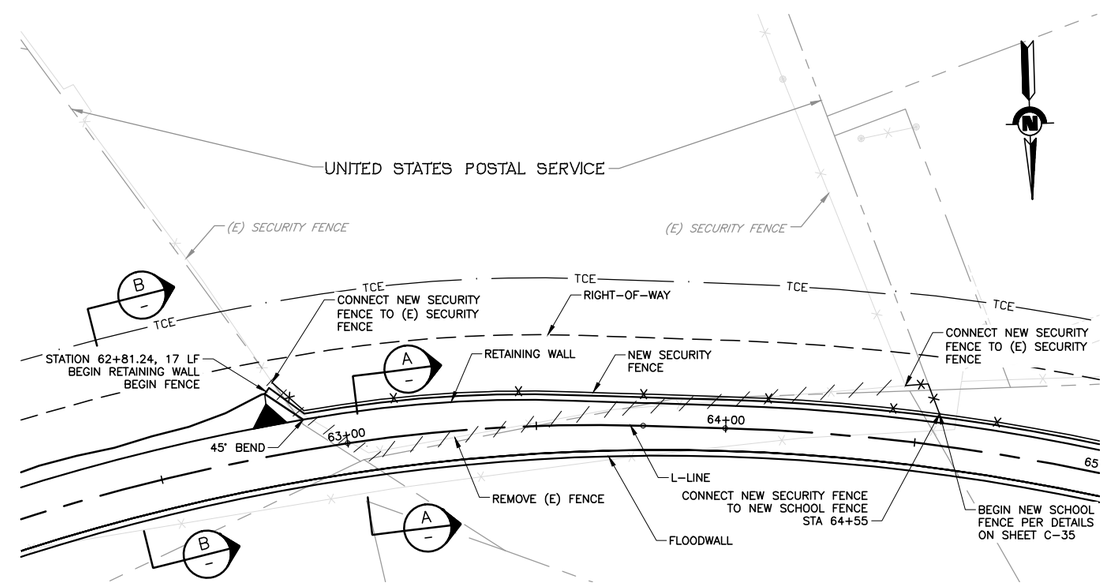

PLAN – USPS

SCALE: 1"=20'

USERNAME: BillShad Tue 08 Jul 2008 09:32am
FILENAME: C:\pwworking\sac\d0171341\C-37

DOCUMENT NUMBER: SFC_LP-C-1028-XXXXXXX

REV	DESCRIPTION	DATE	APPR.

HDR

DATE	ENGINEERING CERTIFICATION
JULY 2015	REGISTERED PROFESSIONAL ENGINEER LANCE M. JONES 08574 Exp. 6/30/11 CIVIL STATE OF CALIFORNIA
DESIGN L. JONES	
DRAWN H. SUAREZ	
CHECKED P. HRADILEK	PROJECT ENGINEER DATE

SAN FRANCISQUITO CREEK
JOINT POWERS AUTHORITY

ACCEPTED BY DISTRICT

PROJECT ENGINEER DATE

PROJECT NAME AND SHEET DESCRIPTION:

SAN FRANCISQUITO CREEK FLOOD REDUCTION, ECOSYSTEM RESTORATION, & RECREATION PROJECT

DETAILS – SECURITY FENCE

SCALE	PROJECT NUMBER
NOT TO SCALE	130806
VERIFY SCALES 0 1" BAR IS ONE INCH ON ORIGINAL DRAWING IF NOT ONE INCH ON THIS SHEET, ADJUST SCALES ACCORDINGLY	SHEET CODE: C-37
	SHEET NUMBER: 52 OF 126

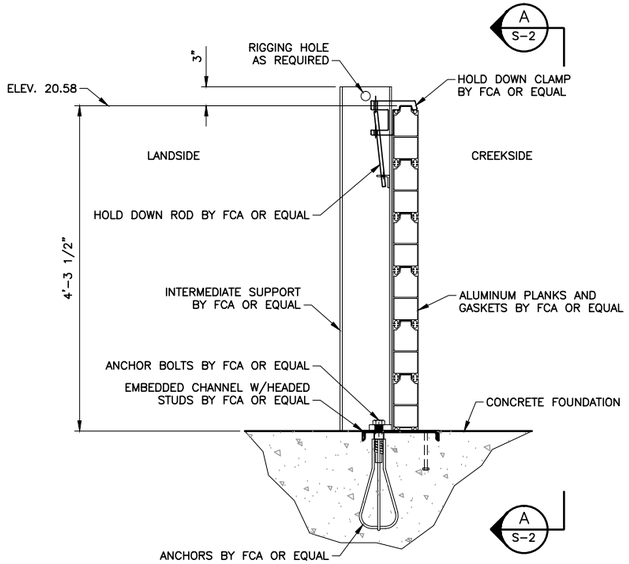

SECTION A — STOPLOG INTERMEDIATE SUPPORT
SCALE: 1" = 1'-0"

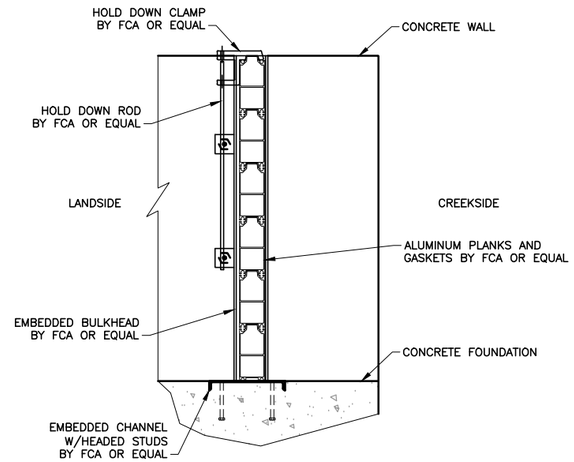

SECTION B — STOPLOG
SCALE: 1" = 1'-0"

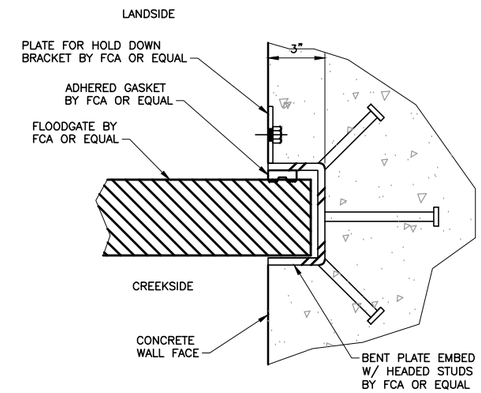

SECTION C — STOPLOG @ SIDE-WALL
SCALE: 3" = 1'-0"

NOTES:

1. STOPLOG CLOSURE SYSTEM TO BE DESIGNED AND MANUFACTURED BY FLOOD CONTROL AMERICA, LLC OR APPROVED EQUAL.
2. ALUMINUM EXTRUSTIONS SHALL BE ASTM B221, ALLOY 6039-T6.
3. STEEL SHAPES, PLATES AND BARS SHALL BE ASTM A36.
4. STEEL WIDE FLANGE MEMBERS SHALL BE ASTM A572.
5. ALL EXPOSED STEEL SHALL BE GALVANIZED PER ASTM A123.
6. ALL GASKET MATERIAL TO BE EPDM RUBBER.

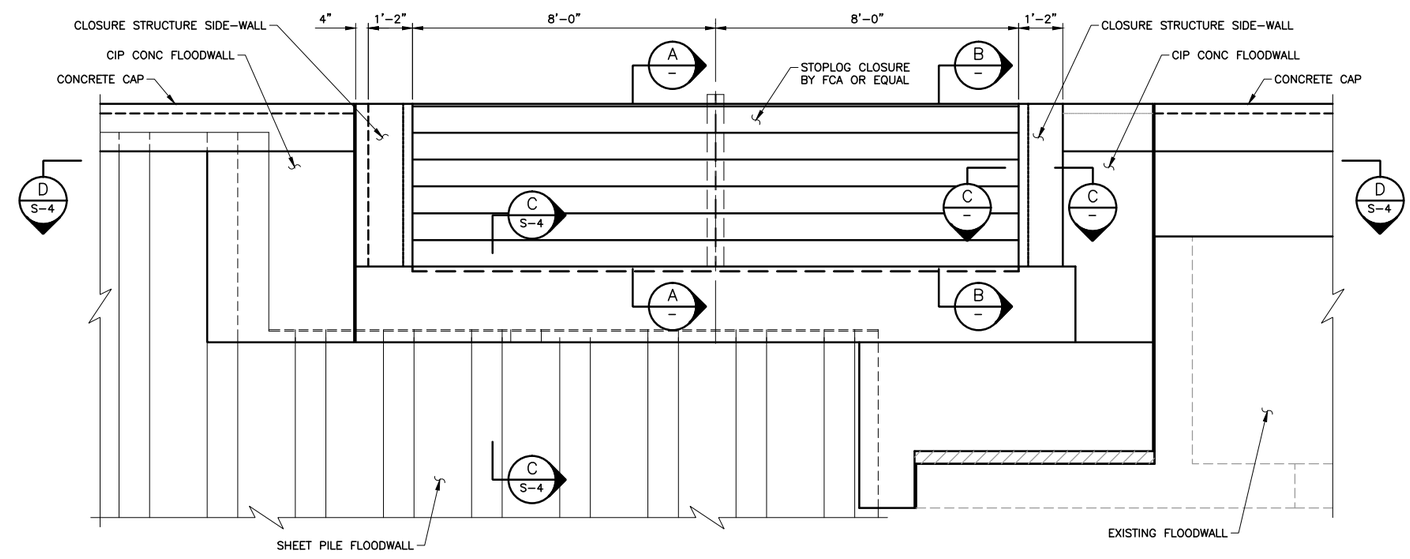

DETAIL 1 — STOPLOG CLOSURE FRONT VIEW
1/2" = 1'-0"

REV	DESCRIPTION	DATE	APPR.
	DRAFT 100% MAY 2015		

HDR Engineering, Inc.

DATE: JULY 2014
DESIGN: L. JONES
DRAWN: H. SUAREZ
CHECKED: P. HRADILEK

ENGINEERING CERTIFICATION
REGISTERED PROFESSIONAL ENGINEER — LANCE M. JONES — 68324 — Exp. 9-30-15 — CIVIL — STATE OF CALIFORNIA
PRELIMINARY
PROJECT ENGINEER DATE

SAN FRANCISQUITO CREEK
JOINT POWERS AUTHORITY
ACCEPTED BY DISTRICT
PROJECT ENGINEER DATE

PROJECT NAME AND SHEET DESCRIPTION:
SAN FRANCISQUITO CREEK
FLOOD REDUCTION, ECOSYSTEM
RESTORATION, & RECREATION PROJECT
DETAILS - STOPLOG CLOSURE

SCALE: AS SHOWN
VERIFY SCALES: 0 — 1"
BAR IS ONE INCH ON ORIGINAL DRAWING IF NOT ONE INCH ON THIS SHEET, ADJUST SCALES ACCORDINGLY

PROJECT NUMBER: 26284002
SHEET CODE: C-38
SHEET NUMBER: 53 OF 119

DOCUMENT NUMBER: SFC_LP-C-1028-XXXXXXX

USERNAME: BillShad Tue 08 Jul 2008 09:32am
FILENAME: C:\pwworking\sac\d0171341\C-38

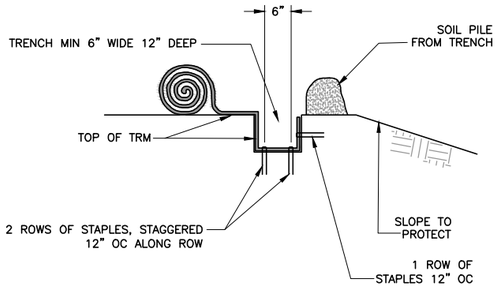

DETAIL 1 / C-17 TOP OF SLOPE HEADER TRENCH – STEP 1
NTS

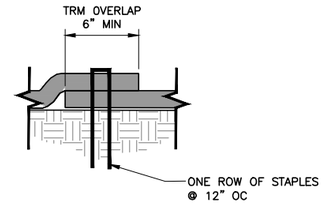

DETAIL 4 / C-17 SIDE SEAM OVERLAP STAPLE
NTS

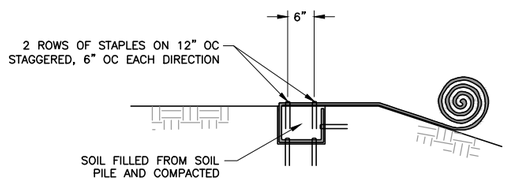

DETAIL 2 / C-17 TOP OF SLOPE HEADER TRENCH – STEP 2
NTS

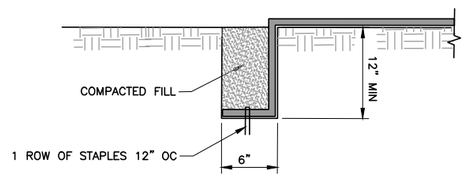

DETAIL 5 / C-17 PERIMETER ANCHOR TRENCH
NTS

END SEAM OR TRMS OVERLAP MINIMUM 6". PLACE 2 ROWS, 4" APART, OF STAPLES 12" OC STAGGERED, THROUGH BOTH TRMS. UPSLOPE TRM LAPS OVER DOWNSLOPE TRM IN A SHINGLE EFFECT.

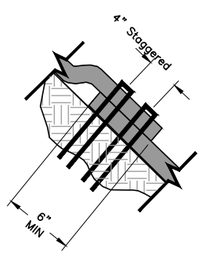

DETAIL 3 / C-17 END ROLL OVERLAP
NTS

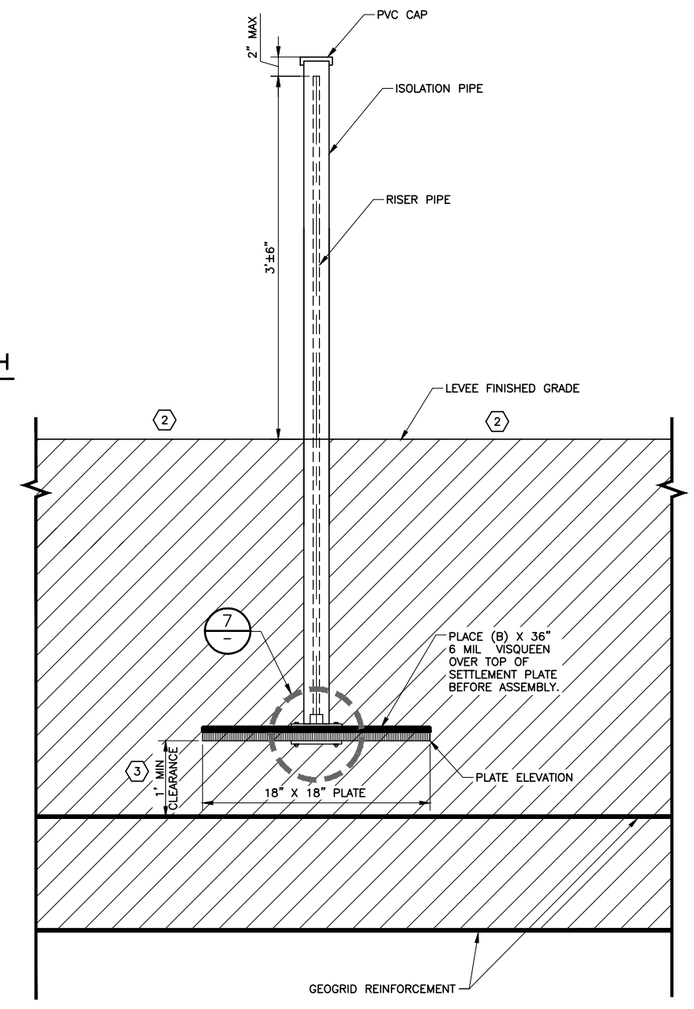

DETAIL 6 / G-7 SETTLEMENT PLATE
NTS

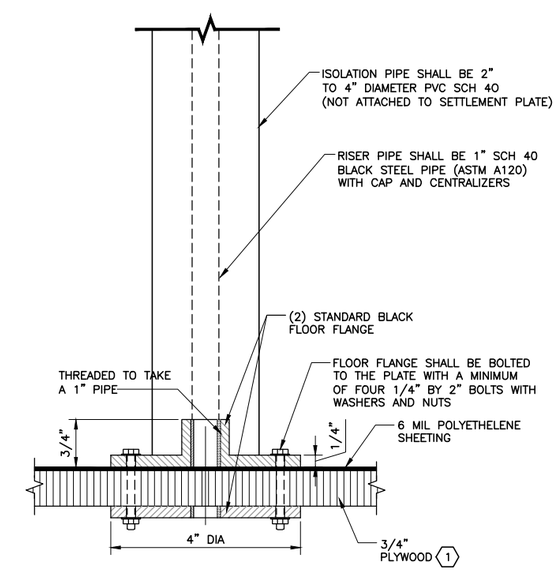

DETAIL 7 / – SETTLEMENT PLATE
NTS

KEY NOTE:

1. SETTLEMENT PLATE SHALL BE CONSTRUCTED OF 3/4" PLYWOOD (EXTERIOR) – COATED WITH WATERPROOF SEALANT.
2. SEE SHEETS G-7 AND G-8 FOR LOCATION OF SETTLEMENT PLATES.
3. CONTRACTOR SHALL INSURE THAT THE GEOGRID LAYER IS NOT DAMAGED BY THE PLACEMENT OF THE SETTLEMENT PLATE. A 1 FOOT SEPARATION IS NECESSARY.

LEGEND:

LIMITS OF NEW LEVEE FILL

REV	DESCRIPTION	DATE	APPR.

HDR

DATE: JULY 2015
DESIGN: L. JONES
DRAWN: H. SUAREZ
CHECKED: P. HRADILEK

ENGINEERING CERTIFICATION
REGISTERED PROFESSIONAL ENGINEER LANCE M. JONES C 68714 Exp. 6/30/16 CIVIL STATE OF CALIFORNIA
PROJECT ENGINEER DATE

SAN FRANCISQUITO CREEK JOINT POWERS AUTHORITY
ACCEPTED BY DISTRICT
PROJECT ENGINEER DATE

PROJECT NAME AND SHEET DESCRIPTION:
SAN FRANCISQUITO CREEK FLOOD REDUCTION, ECOSYSTEM RESTORATION, & RECREATION PROJECT
DETAILS – SETTLEMENT PLATE
DETAILS – TRM INSTALLATION

SCALE: AS SHOWN
VERIFY SCALES: 0 1" BAR IS ONE INCH ON ORIGINAL DRAWING IF NOT ONE INCH ON THIS SHEET, ADJUST SCALES ACCORDINGLY
PROJECT NUMBER: 26284002
SHEET CODE: C-39
SHEET NUMBER: 54 OF 126

DOCUMENT NUMBER: SFC_LP-C-1028-XXXXXXX

USERNAME: BillShad Tue 08 Jul 2008 09:32am
FILENAME: C:\pwworking\sac\d0171341\C-39

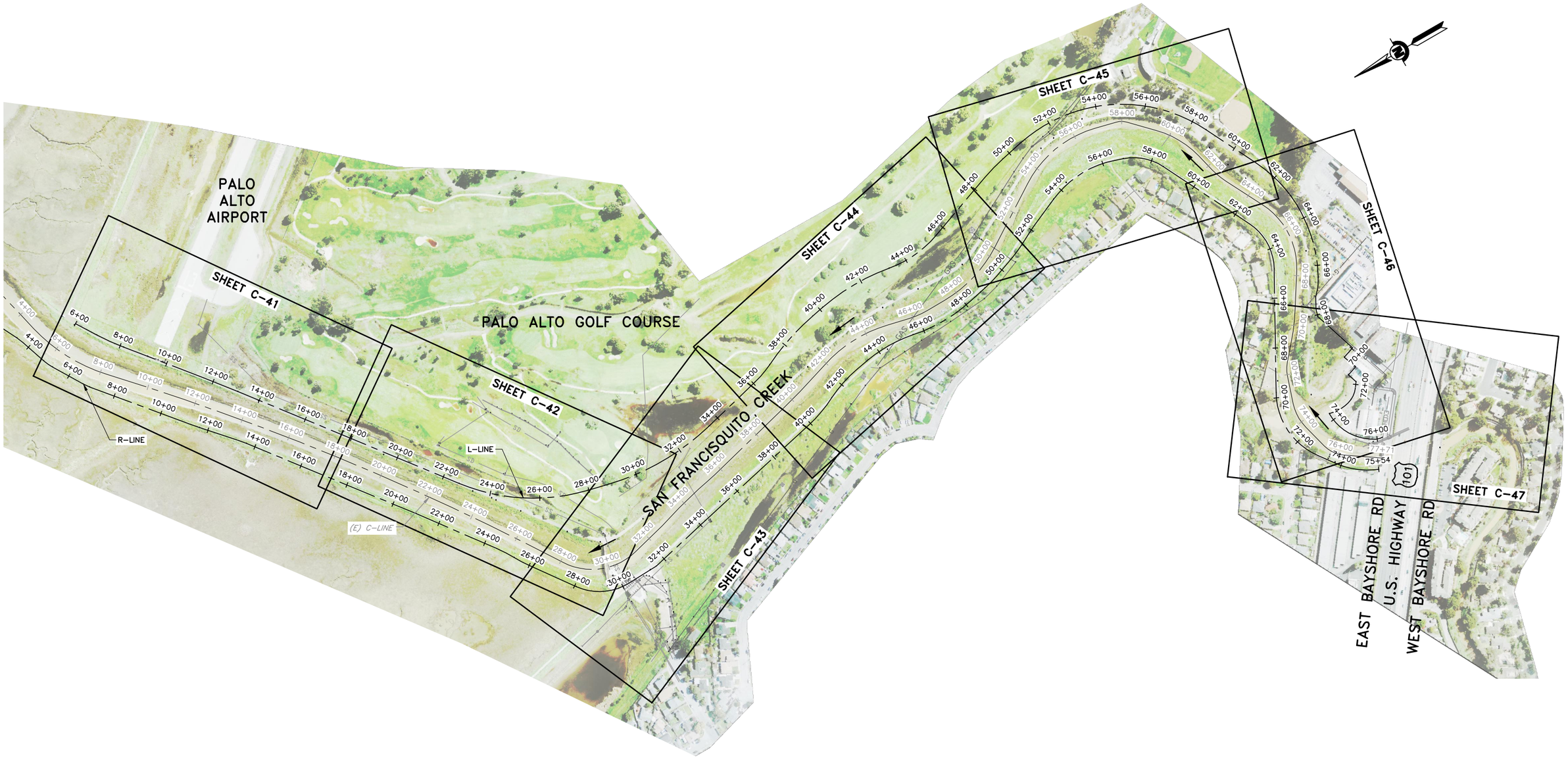

EXISTING UTILITIES SHEET LAYOUT PLAN

SCALE: 1"=200'

USERNAME: BillShad Tue 08 Jul 2008 09:32am
FILENAME: C:\pwworking\sec\d0171341\C-40

DOCUMENT NUMBER: SFC_LP-G-1028-XXXXXXX

REV	DESCRIPTION	DATE	APPR.

HDR

DATE	ENGINEERING CERTIFICATION
JULY 2015	REGISTERED PROFESSIONAL ENGINEER LANCE M. JONES 065744 Exp. 6/30/11 CIVIL STATE OF CALIFORNIA
DESIGN L. JONES	
DRAWN H. SUAREZ	
CHECKED P. HRADILEK	PROJECT ENGINEER DATE

SAN FRANCISQUITO CREEK JOINT POWERS AUTHORITY

ACCEPTED BY DISTRICT

PROJECT ENGINEER DATE

PROJECT NAME AND SHEET DESCRIPTION:

SAN FRANCISQUITO CREEK FLOOD REDUCTION, ECOSYSTEM RESTORATION, & RECREATION PROJECT

UTILITY SHEET LAYOUT PLAN
OVERALL LAYOUT

SCALE	PROJECT NUMBER
1" = 200'	26284002
VERIFY SCALES 0 1" BAR IS ONE INCH ON ORIGINAL DRAWING IF NOT ONE INCH ON THIS SHEET, ADJUST SCALES ACCORDINGLY	SHEET CODE: C-40
	SHEET NUMBER: 55 OF 126

PLAN

SCALE: 1"=40'

FOR CONTINUATION SEE SHEET C-42

USERNAME: BillShad Tue 08 Jul 2008 09:32am
FILENAME: C:\pwworking\sac\d0171341\C-41

DOCUMENT NUMBER: SFC_LP-C-1028-XXXXXX

REV	DESCRIPTION	DATE	APPR.

HDR

DATE	JULY 2015
DESIGN	L. JONES
DRAWN	H. SUAREZ
CHECKED	P. HRADILEK

ENGINEERING CERTIFICATION

REGISTERED PROFESSIONAL ENGINEER LANCE M. JONES 68574 EXP. 12/30/11 CIVIL STATE OF CALIFORNIA

PROJECT ENGINEER DATE

SAN FRANCISQUITO CREEK JOINT POWERS AUTHORITY

ACCEPTED BY DISTRICT

PROJECT ENGINEER DATE

PROJECT NAME AND SHEET DESCRIPTION:

SAN FRANCISQUITO CREEK FLOOD REDUCTION, ECOSYSTEM RESTORATION, & RECREATION PROJECT

UTILITY PLAN
STA 6+00 TO STA 18+00 (C-LINE)

SCALE	PROJECT NUMBER
1" = 40'	26284002
VERIFY SCALES 0 1" BAR IS ONE INCH ON ORIGINAL DRAWING IF NOT ONE INCH ON THIS SHEET, ADJUST SCALES ACCORDINGLY	SHEET CODE: C-41
	SHEET NUMBER: 56 OF 126

NOTE:

1. SS LINE TO BE RELOCATED BY OTHERS. CONTRACTOR TO COORDINATE RELOCATION WITH EAST PALO ALTO SANITARY DISTRICT.
2. REMOVE (E) UTILITIES PER SECTIONS A AND D ON SHEET C-36.
3. CONTRACTOR SHALL COORDINATE UTILITY REMOVAL WITH PALO ALTO GOLF COURSE TO INSURE THAT THE REMOVALS DO NOT DISRUPT UTILITY OPERATION WITHIN THE GOLF COURSE.

KEY NOTE:

1. REMOVE EX STORM DRAIN LINE TO (E) DI. CAP AT DI.
2. REMOVE EX WATER LINE WITHIN R/W. CAP AT R/W.
3. REMOVE EX JOINT TRENCH WITHIN R/W. CAP AT R/W.
4. REMOVE ABANDONED SANITARY SEWER LINE TO LIMITS SHOWN. CAP AT R/W.

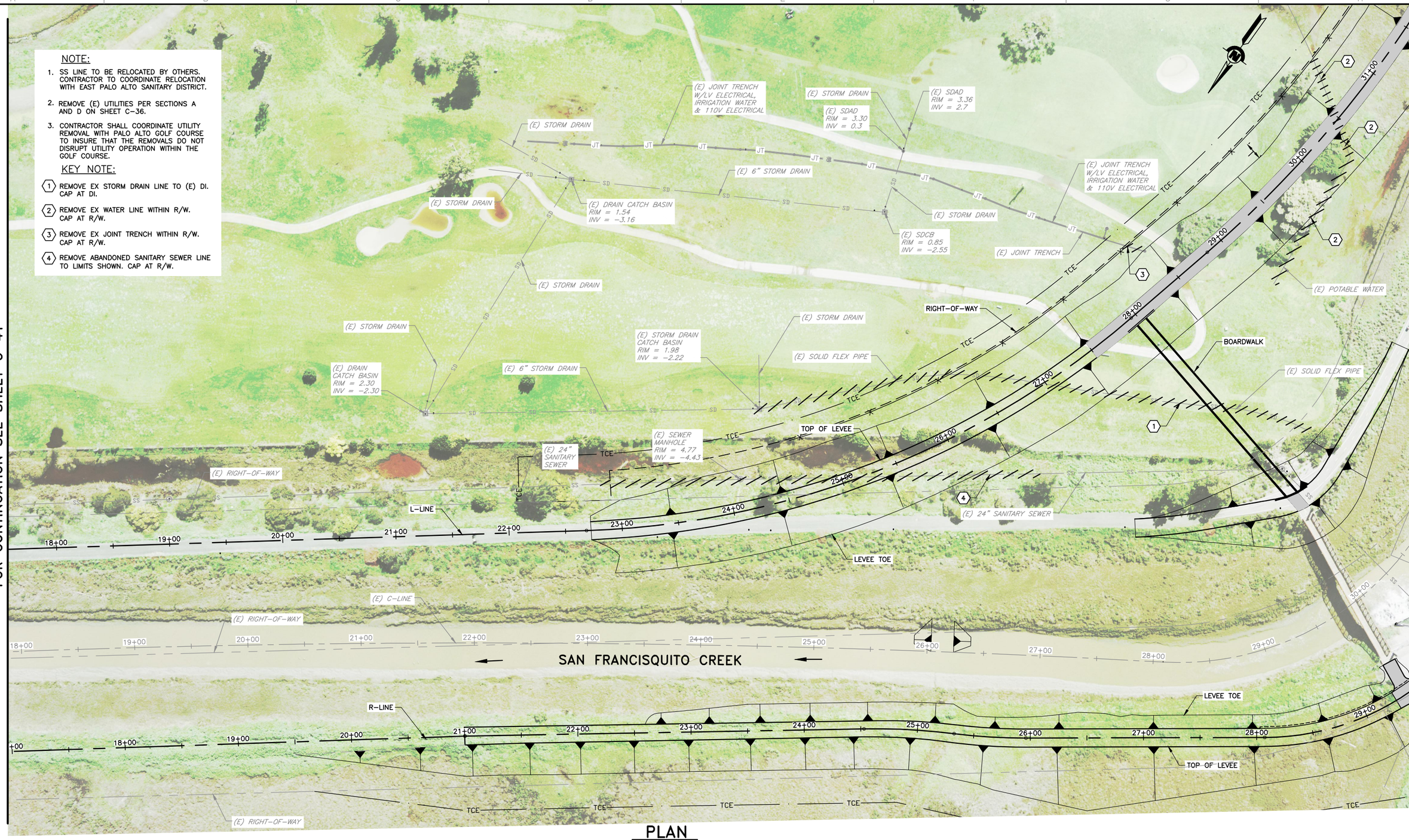

PLAN
SCALE: 1"=40'

FOR CONTINUATION SEE SHEET C-41

FOR CONTINUATION SEE SHEET C-43

USERNAME: BillShad Tue 08 Jul 2008 09:32am
FILENAME: C:\pwworking\sac\d0171341\C-42

DOCUMENT NUMBER: SFC_LP-C-1028-XXXXXX

REV	DESCRIPTION	DATE	APPR.

HDR

DATE	JULY 2015
DESIGN	L. JONES
DRAWN	H. SUAREZ
CHECKED	P. HRADILEK

ENGINEERING CERTIFICATION
REGISTERED PROFESSIONAL ENGINEER LANCE M. JONES 085744 Exp. 12/31/11 CIVIL STATE OF CALIFORNIA
PROJECT ENGINEER DATE

SAN FRANCISQUITO CREEK JOINT POWERS AUTHORITY

ACCEPTED BY DISTRICT
PROJECT ENGINEER DATE

PROJECT NAME AND SHEET DESCRIPTION:

SAN FRANCISQUITO CREEK FLOOD REDUCTION, ECOSYSTEM RESTORATION, & RECREATION PROJECT

UTILITY PLAN
STA 18+00 TO STA 31+00 (C-LINE)

SCALE: 1" = 40'
VERIFY SCALES: 0 — 1"
BAR IS ONE INCH ON ORIGINAL DRAWING IF NOT ONE INCH ON THIS SHEET, ADJUST SCALES ACCORDINGLY

PROJECT NUMBER: 26284002
SHEET CODE: C-42
SHEET NUMBER: 57 OF 126

FOR CONTINUATION SEE SHEET C-42

NOTE:

1. SS LINE TO BE RELOCATED BY OTHERS. CONTRACTOR TO COORDINATE RELOCATION WITH EAST PALO ALTO SANITARY DISTRICT.
2. REMOVE (E) UTILITIES PER SECTIONS A AND D ON SHEET C-36.
3. CONTRACTOR SHALL COORDINATE UTILITY REMOVAL WITH PALO ALTO GOLF COURSE TO INSURE THAT THE REMOVALS DO NOT DISRUPT UTILITY OPERATION WITHIN THE GOLF COURSE.

KEY NOTE:

1. REMOVE EX SOLID FLEX PIPE WITHIN R/W.
2. REMOVE ABANDONED SEWER LINE TO LIMITS SHOWN. CAP AT R/W.
3. REMOVE EXISTING VAULT.
4. PROTECT IN PLACE EXISTING PUMP STATION AND ADJACENT UTILITIES.

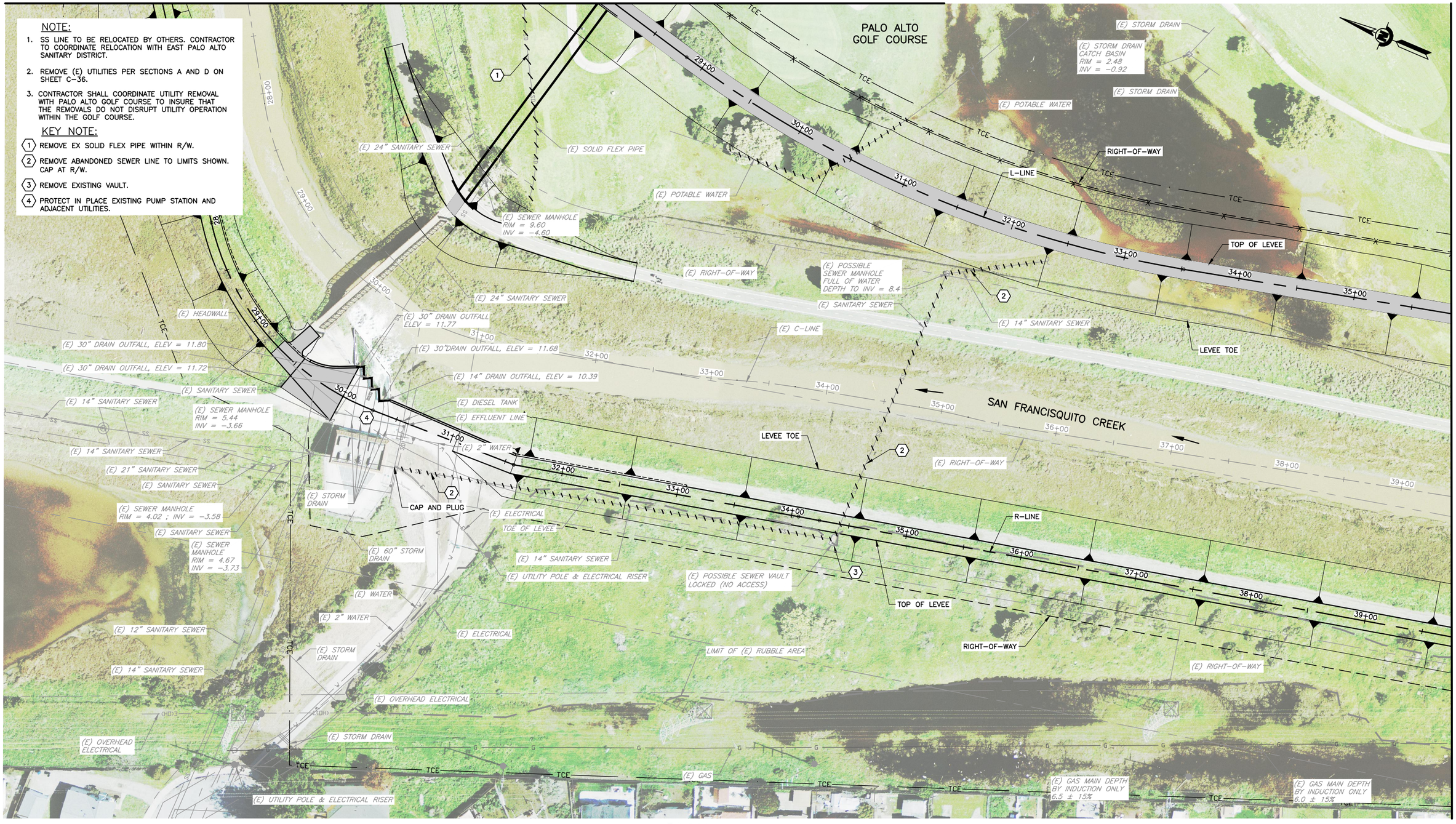

PLAN

SCALE: 1"=40'

FOR CONTINUATION SEE SHEET C-44

REV	DESCRIPTION	DATE	APPR.

HDR

DATE	ENGINEERING CERTIFICATION
JULY 2015	REGISTERED PROFESSIONAL ENGINEER LANCE M. JONES 065714 Exp. 6/30/17 CIVIL STATE OF CALIFORNIA
DESIGN L. JONES	
DRAWN H. SUAREZ	
CHECKED P. HRADILEK	PROJECT ENGINEER DATE

SAN FRANCISQUITO CREEK JOINT POWERS AUTHORITY

ACCEPTED BY DISTRICT

PROJECT ENGINEER DATE

PROJECT NAME AND SHEET DESCRIPTION:

SAN FRANCISQUITO CREEK FLOOD REDUCTION, ECOSYSTEM RESTORATION, & RECREATION PROJECT

UTILITY PLAN

STA 30+00 TO STA 39+00 (C-LINE)

SCALE	PROJECT NUMBER
1" = 40'	26284002
VERIFY SCALES 0 1" BAR IS ONE INCH ON ORIGINAL DRAWING IF NOT ONE INCH ON THIS SHEET, ADJUST SCALES ACCORDINGLY	SHEET CODE: C-43
	SHEET NUMBER: 58 OF 126

DOCUMENT NUMBER: SFC_LP-C-1028-XXXXXX

USERNAME: BillShad Tue 08 Jul 2008 09:32am
FILENAME: C:\pwworking\sec\d0171341\C-43

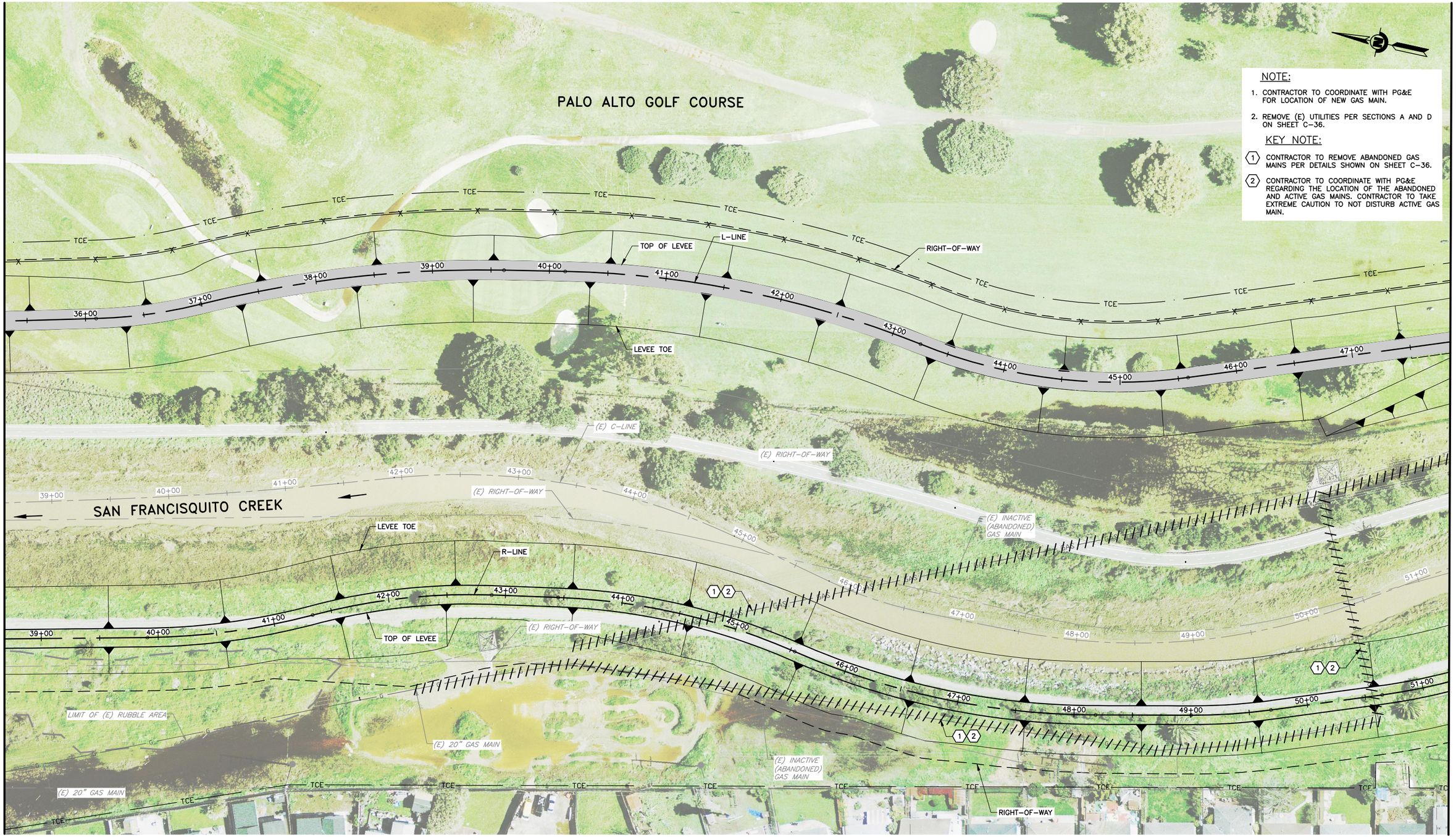

NOTE:

1. CONTRACTOR TO COORDINATE WITH PG&E FOR LOCATION OF NEW GAS MAIN.
2. REMOVE (E) UTILITIES PER SECTIONS A AND D ON SHEET C-36.

KEY NOTE:

1. CONTRACTOR TO REMOVE ABANDONED GAS MAINS PER DETAILS SHOWN ON SHEET C-36.
2. CONTRACTOR TO COORDINATE WITH PG&E REGARDING THE LOCATION OF THE ABANDONED AND ACTIVE GAS MAINS. CONTRACTOR TO TAKE EXTREME CAUTION TO NOT DISTURB ACTIVE GAS MAIN.

FOR CONTINUATION SEE SHEET C-43

FOR CONTINUATION SEE SHEET C-45

PLAN

SCALE: 1"=40'

USERNAME: BillShad Tue 08 Jul 2008 09:32am
FILENAME: C:\pwworking\sec\d0171341\C-44

DOCUMENT NUMBER: SFC_LP-C-1028-XXXXXX

REV	DESCRIPTION	DATE	APPR.

HDR

DATE	ENGINEERING CERTIFICATION
JULY 2015	REGISTERED PROFESSIONAL ENGINEER LANCE M. JONES 68374 EXP. 6/30/17 CIVIL STATE OF CALIFORNIA
DESIGN	
L. JONES	
DRAWN	
H. SUAREZ	
CHECKED	
P. HRADILEK	PROJECT ENGINEER DATE

SAN FRANCISQUITO CREEK
JOINT POWERS AUTHORITY

ACCEPTED BY DISTRICT

PROJECT ENGINEER DATE

PROJECT NAME AND SHEET DESCRIPTION:

SAN FRANCISQUITO CREEK FLOOD REDUCTION, ECOSYSTEM RESTORATION, & RECREATION PROJECT

UTILITY PLAN
STA 39+00 TO STA 51+00 (C-LINE)

SCALE	PROJECT NUMBER
1" = 40'	26284002
VERIFY SCALES 0 1" BAR IS ONE INCH ON ORIGINAL DRAWING IF NOT ONE INCH ON THIS SHEET, ADJUST SCALES ACCORDINGLY	SHEET CODE: C-44
	SHEET NUMBER: 59 OF 126

NOTE:

1. REMOVE (E) UTILITIES PER SECTIONS A AND D ON SHEET C-36.

KEY NOTE:

1. CONTRACTOR TO REMOVE ABANDONED GAS MAINS PER DETAILS SHOWN ON SHEET C-36.
2. REMOVE ABANDONED GAS MAIN TO R/W. COORDINATE WITH PG&E TO LOCATE ACTIVE GAS MAIN. CONTRACTOR TO TAKE EXTREME CAUTION TO NOT DISTURB ACTIVE GAS MAIN.

PLAN

SCALE: 1"=40'

FOR CONTINUATION SEE SHEET C-46

FOR CONTINUATION SEE SHEET C-44

USERNAME: BillShad Tue 08 Jul 2008 09:32am
FILENAME: C:\pwworking\sec\d0171341\C-45

DOCUMENT NUMBER: SFC_LP-C-1028-XXXXXX

REV	DESCRIPTION	DATE	APPR.

HDR

DATE	JULY 2015
DESIGN	L. JONES
DRAWN	H. SUAREZ
CHECKED	P. HRADILEK

ENGINEERING CERTIFICATION

REGISTERED PROFESSIONAL ENGINEER LANCE M. JONES 08574 EXP. 6/30/17 CIVIL STATE OF CALIFORNIA

PROJECT ENGINEER DATE

SAN FRANCISQUITO CREEK JOINT POWERS AUTHORITY

ACCEPTED BY DISTRICT

PROJECT ENGINEER DATE

PROJECT NAME AND SHEET DESCRIPTION:

SAN FRANCISQUITO CREEK FLOOD REDUCTION, ECOSYSTEM RESTORATION, & RECREATION PROJECT

UTILITY PLAN

STA 51+00 TO STA 63+00 (C-LINE)

SCALE	PROJECT NUMBER
1" = 40'	26284002

VERIFY SCALES: 0 — 1"
BAR IS ONE INCH ON ORIGINAL DRAWING IF NOT ONE INCH ON THIS SHEET, ADJUST SCALES ACCORDINGLY

SHEET CODE: C-45

SHEET NUMBER: 60 OF 126

NOTE:

1. REMOVE (E) UTILITIES PER SECTIONS A AND D ON SHEET C-36.

KEY NOTE:

1. REMOVE AND DISPOSE OF EXISTING SD LINE. CAP AT R/W.
2. REMOVE AND DISPOSE OF EXISTING SD AND INLET.
3. REMOVE AND DISPOSE OF CITY OF PALO ALTO 2.5" WATER LINE WITHIN R/W. CAP AT R/W. COORDINATE WITH CITY OF PALO ALTO UTILITIES DEPARTMENT BEFORE REMOVING THE LINE.
4. REMOVE AND DISPOSE OF CITY OF PALO ALTO GAS LINE WITHIN R/W. CAP AT R/W. COORDINATE WITH CITY OF PALO ALTO UTILITIES DEPARTMENT BEFORE REMOVING THE LINE.
5. REMOVE AND DISPOSE OF EXISTING IRRIGATION LINE. CAP AT EXISTING PARKING LOT.

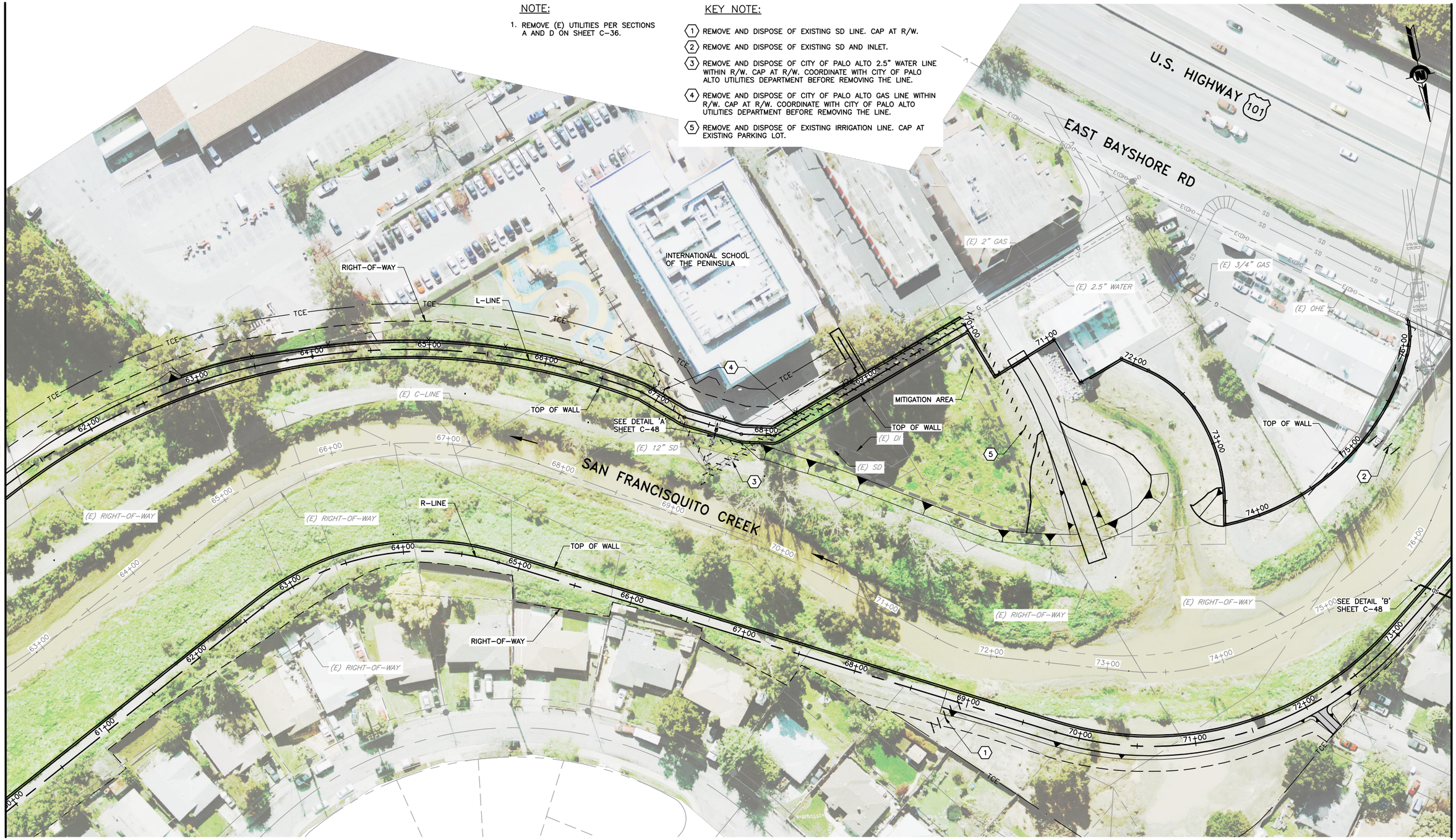

PLAN

SCALE: 1"=40'

REV	DESCRIPTION	DATE	APPR.

HDR

DATE: JULY 2015
DESIGN: L. JONES
DRAWN: H. SUAREZ
CHECKED: P. HRADILEK

ENGINEERING CERTIFICATION
REGISTERED PROFESSIONAL ENGINEER LANCE M. JONES 08574 EXP. 6/30/17 CIVIL STATE OF CALIFORNIA
PROJECT ENGINEER DATE

SAN FRANCISQUITO CREEK JOINT POWERS AUTHORITY
ACCEPTED BY DISTRICT
PROJECT ENGINEER DATE

PROJECT NAME AND SHEET DESCRIPTION:
SAN FRANCISQUITO CREEK FLOOD REDUCTION, ECOSYSTEM RESTORATION, & RECREATION PROJECT
UTILITY PLAN
STA 63+00 TO STA 73+00 (C-LINE)

SCALE: 1" = 40'
VERIFY SCALES: 0 — 1"
BAR IS ONE INCH ON ORIGINAL DRAWING IF NOT ONE INCH ON THIS SHEET, ADJUST SCALES ACCORDINGLY

PROJECT NUMBER: 26284002
SHEET CODE: C-46
SHEET NUMBER: 61 OF 126

DOCUMENT NUMBER: SFC_LP-C-1028-XXXXXX

USERNAME: BillShad Tue 08 Jul 2008 09:32am
FILENAME: C:\pwworking\sec\d0171341\C-46

FOR CONTINUATION SEE SHEET C-46

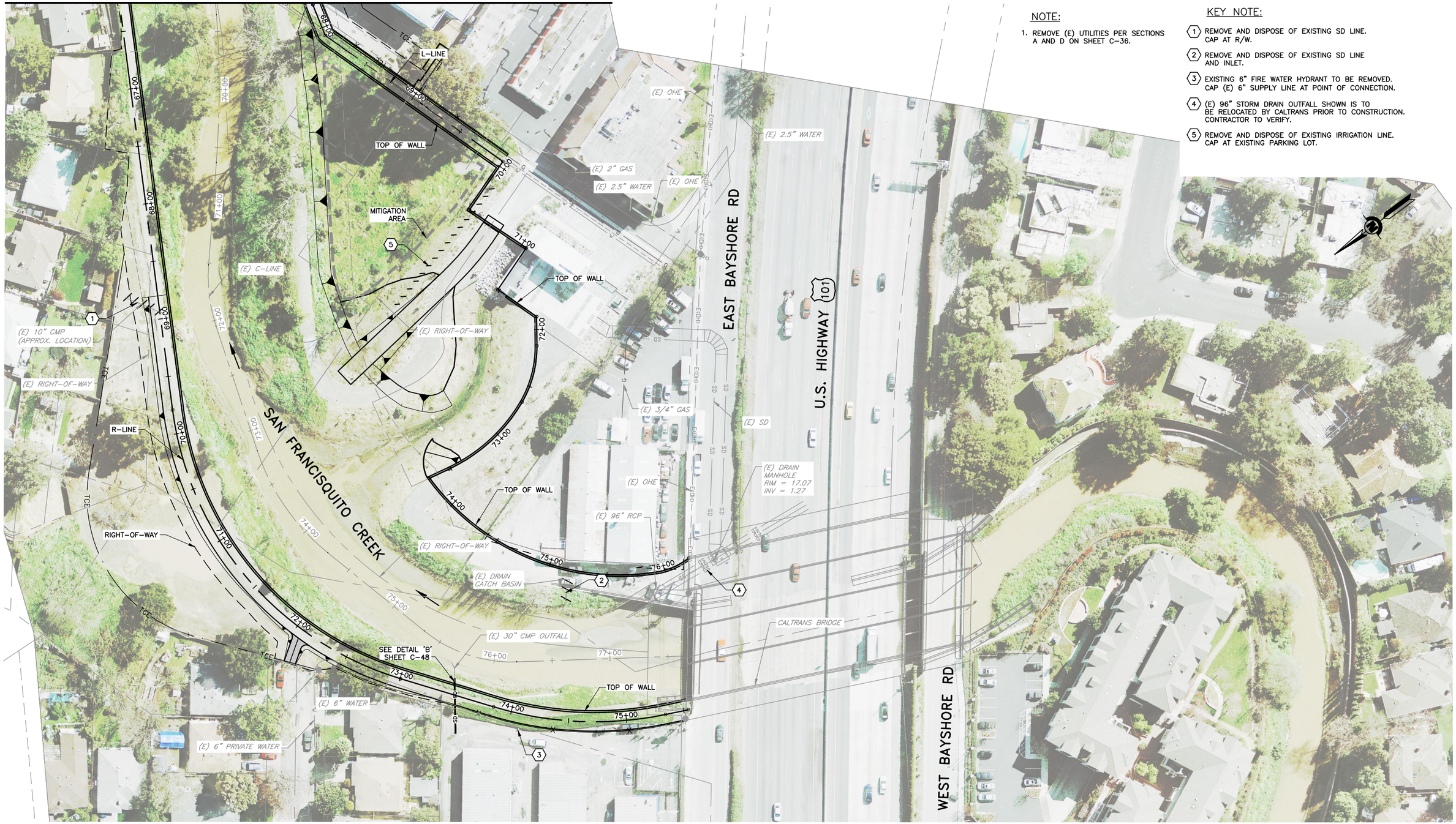

PLAN

SCALE: 1"=40'

NOTE:

1. REMOVE (E) UTILITIES PER SECTIONS A AND D ON SHEET C-36.

KEY NOTE:

1. REMOVE AND DISPOSE OF EXISTING SD LINE. CAP AT R/W.
2. REMOVE AND DISPOSE OF EXISTING SD LINE AND INLET.
3. EXISTING 6" FIRE WATER HYDRANT TO BE REMOVED. CAP (E) 6" SUPPLY LINE AT POINT OF CONNECTION.
4. (E) 96" STORM DRAIN OUTFALL SHOWN IS TO BE RELOCATED BY CALTRANS PRIOR TO CONSTRUCTION. CONTRACTOR TO VERIFY.
5. REMOVE AND DISPOSE OF EXISTING IRRIGATION LINE. CAP AT EXISTING PARKING LOT.

REV	DESCRIPTION	DATE	APPR.

HDR

DATE: JULY 2015
DESIGN: L. JONES
DRAWN: H. SUAREZ
CHECKED: P. HRADILEK

ENGINEERING CERTIFICATION
REGISTERED PROFESSIONAL ENGINEER LANCE M. JONES 65574 Exp. 6/30/17 CIVIL STATE OF CALIFORNIA
PROJECT ENGINEER DATE

SAN FRANCISQUITO CREEK JOINT POWERS AUTHORITY
ACCEPTED BY DISTRICT
PROJECT ENGINEER DATE

PROJECT NAME AND SHEET DESCRIPTION:
SAN FRANCISQUITO CREEK FLOOD REDUCTION, ECOSYSTEM RESTORATION, & RECREATION PROJECT
UTILITY PLAN
STA 70+00 TO STA 77+50 (C-LINE)

SCALE: 1" = 40'
VERIFY SCALES: 0 — 1"
BAR IS ONE INCH ON ORIGINAL DRAWING IF NOT ONE INCH ON THIS SHEET, ADJUST SCALES ACCORDINGLY

PROJECT NUMBER: 26284002
SHEET CODE: C-47
SHEET NUMBER: 62 OF 126

DOCUMENT NUMBER: SFC_LP-C-1028-XXXXXX

USERNAME: BillShad Tue 08 Jul 2008 09:32am
FILENAME: C:\pwworking\sac\d0171341\C-47

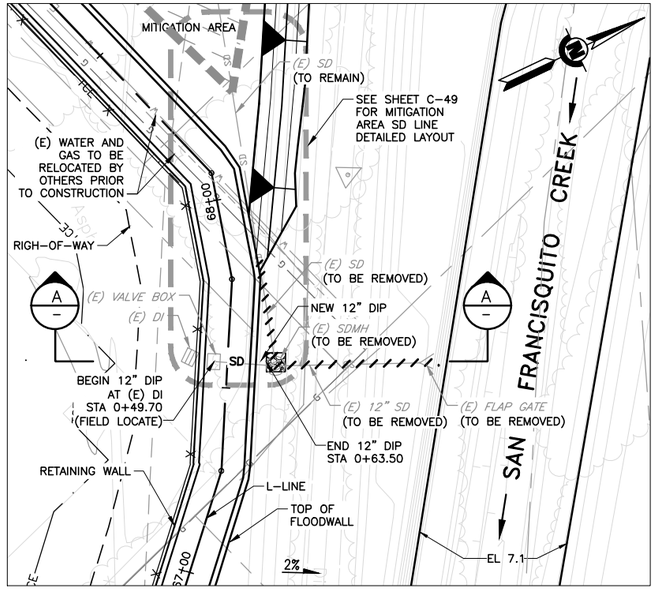

PLAN – SD OUTFALL LINE

SCALE: 1"=20'

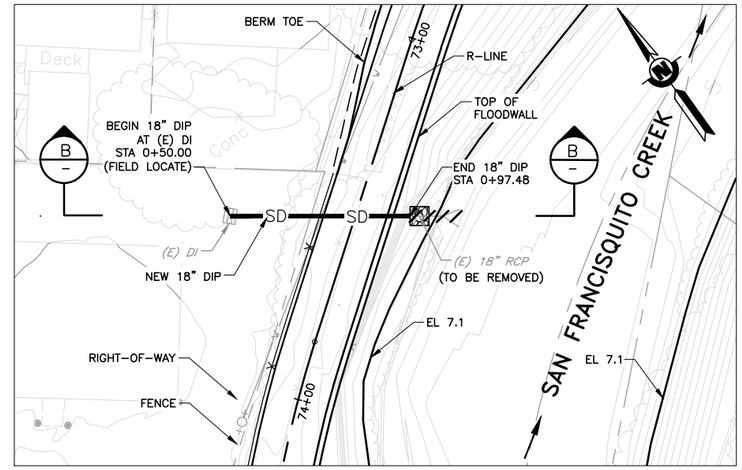

PLAN – SD OUTFALL LINE

SCALE: 1"=20'

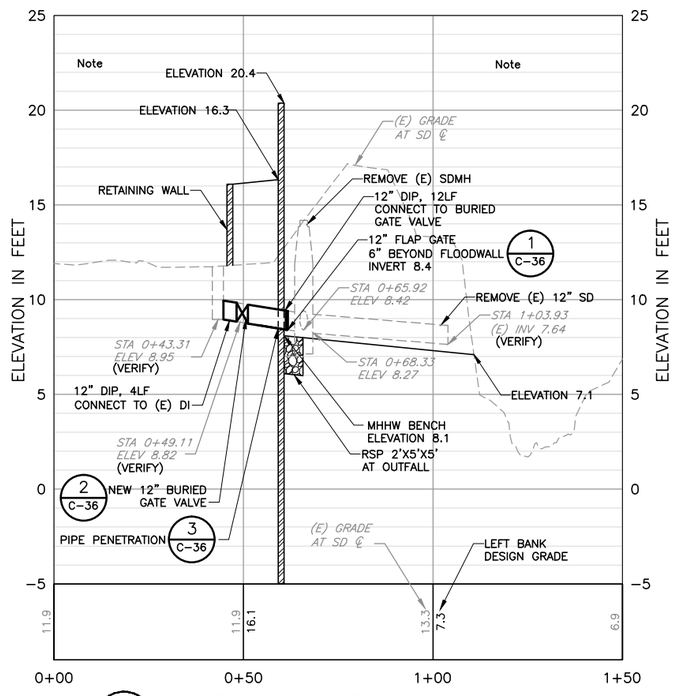

A PROFILE – SD OUTFALL LINE

HORIZ: 1"=20'
VERT: 1"=4'

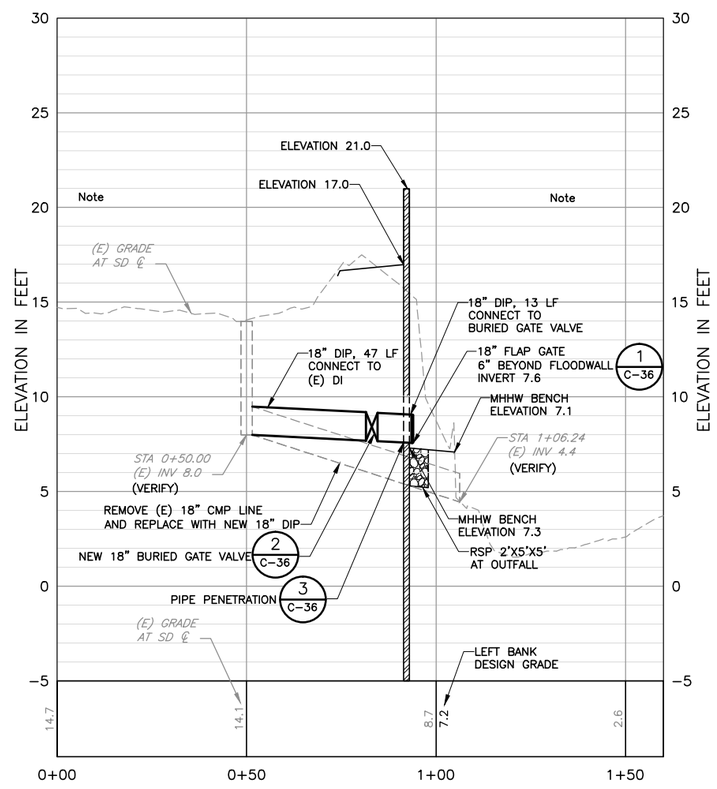

B PROFILE – SD OUTFALL LINE

B

HORIZ: 1"=20'
VERT: 1"=4'

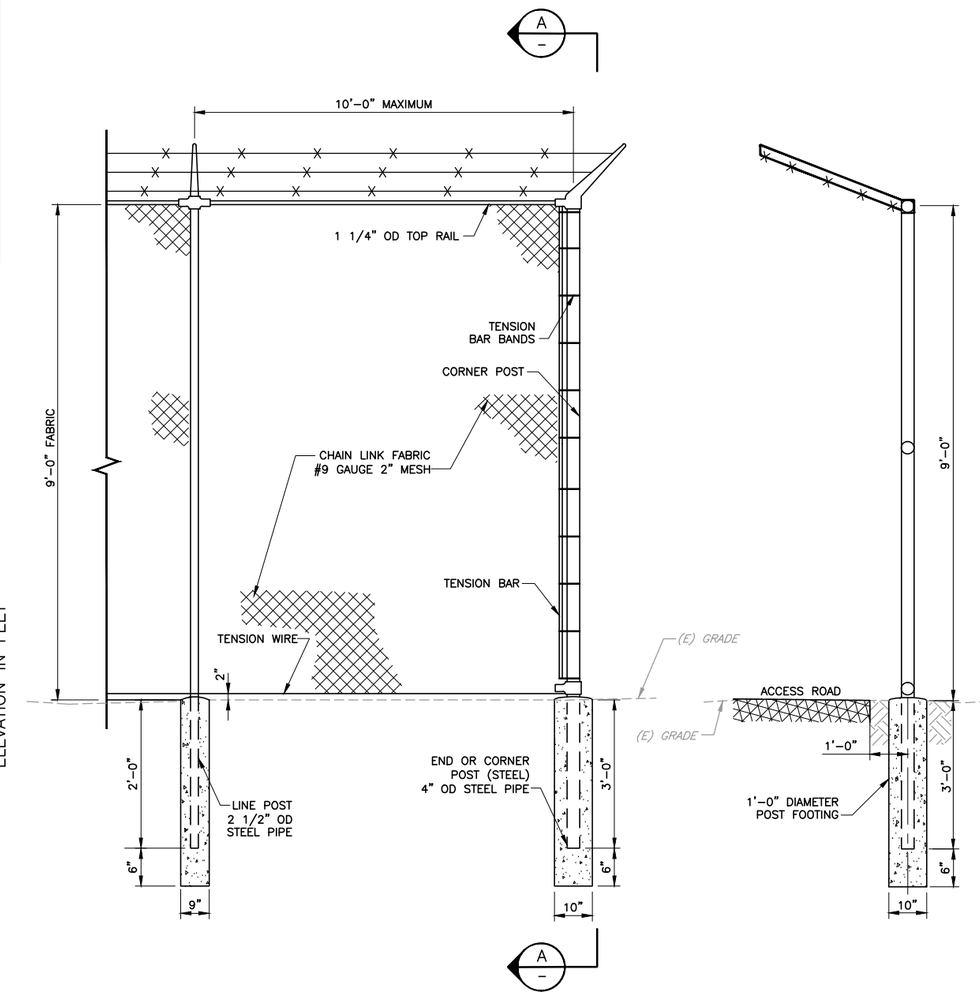

DETAIL 1 C-9 SECURITY FENCE

SCALE: 1" = 2'

SECTION A

SCALE: 1" = 2'

REV	DESCRIPTION	DATE	APPR.

DATE: JULY 2015
DESIGN: L. JONES
DRAWN: H. SUAREZ
CHECKED: P. HRADILEK

ENGINEERING CERTIFICATION
REGISTERED PROFESSIONAL ENGINEER LANCE M. JONES C 68574 Exp. 6/30/17 CIVIL STATE OF CALIFORNIA
PROJECT ENGINEER DATE

SAN FRANCISQUITO CREEK JOINT POWERS AUTHORITY
ACCEPTED BY DISTRICT
PROJECT ENGINEER DATE

PROJECT NAME AND SHEET DESCRIPTION:
SAN FRANCISQUITO CREEK FLOOD REDUCTION, ECOSYSTEM RESTORATION, & RECREATION PROJECT
PLAN AND PROFILE
NEW UTILITIES

SCALE: AS SHOWN
VERIFY SCALES: 0 1"
BAR IS ONE INCH ON ORIGINAL DRAWING IF NOT ONE INCH ON THIS SHEET, ADJUST SCALES ACCORDINGLY

PROJECT NUMBER: 26284002
SHEET CODE: C-48
SHEET NUMBER: 63 OF 126

DOCUMENT NUMBER: SFC_LP-C-1028-XXXXXX

USERNAME: BillShad Tue 08 Jul 2008 09:32am
FILENAME: C:\pwworking\sec\d0171341\C-48

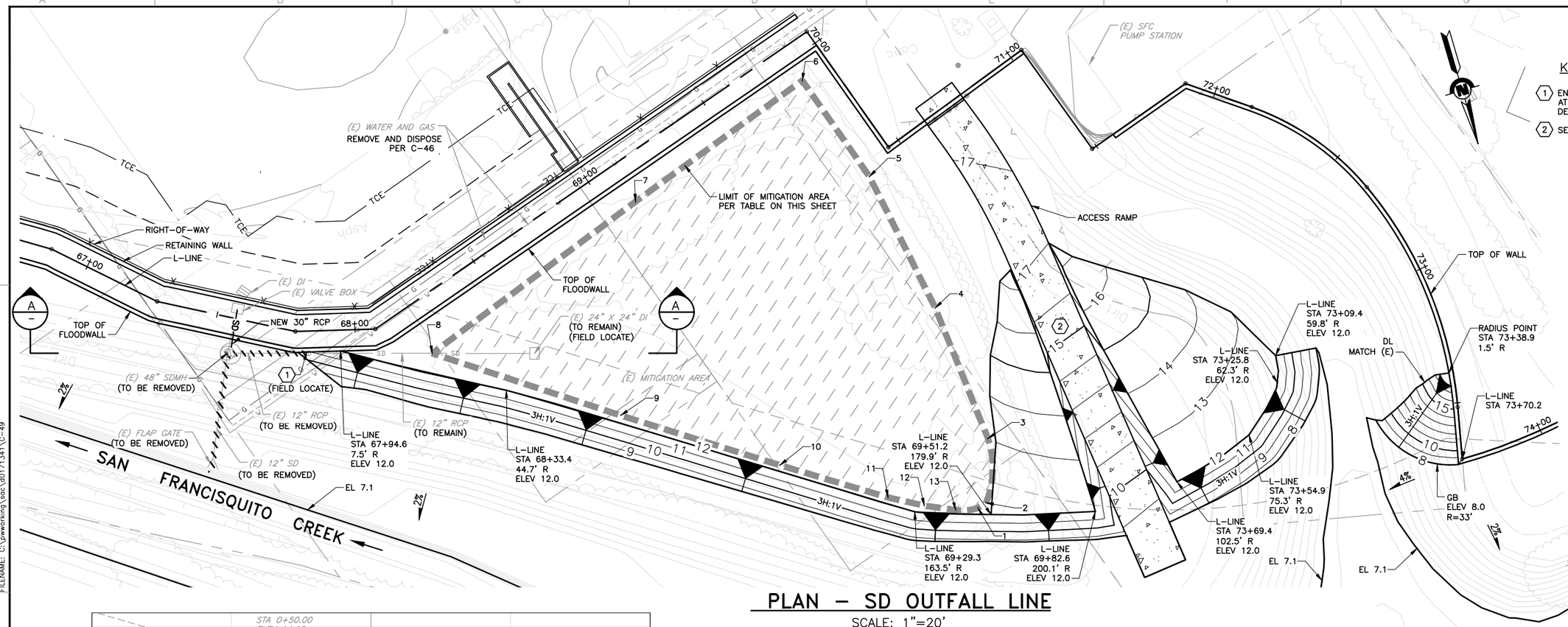

KEY NOTE:

1. END REMOVAL OF EXISTING STORM DRAIN AT EMBANKMENT. INSTALL FLAP GATE PER DETAIL 1 THIS SHEET.
2. SEE SHEET C-21 FOR ACCESS RAMP DETAIL.

PLAN – SD OUTFALL LINE

SCALE: 1"=20'

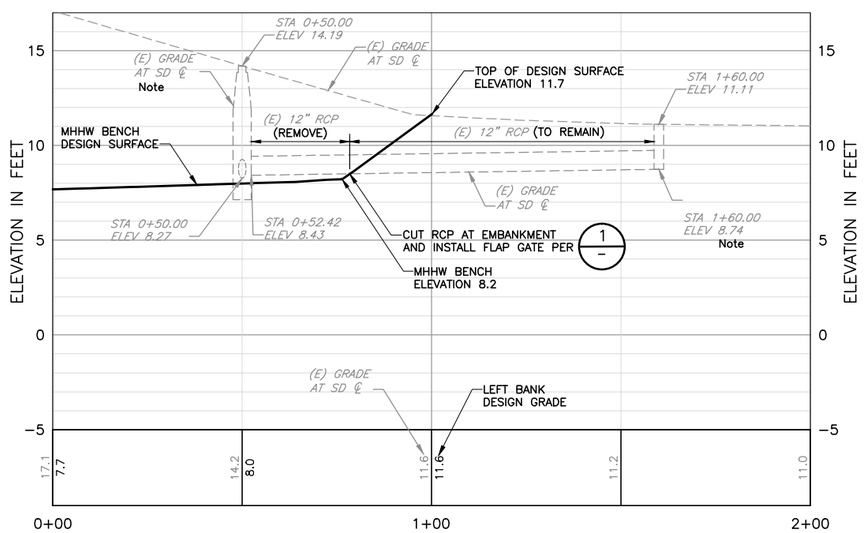

A PROFILE – SD OUTFALL LINE

HORIZ: 1"=20'
VERT: 1"=4'

LIMITS OF MITIGATION AREA

POINT #	NORTHING	EASTING
1	1991616.03	6089647.82
2	1991615.07	6089644.53
3	1991593.17	6089637.38
4	1991542.99	6089642.33
5	1991491.19	6089651.71
6	1991451.42	6089665.08
7	1991476.21	6089734.67
8	1991507.82	6089819.78
9	1991548.18	6089761.27
10	1991581.33	6089711.61
11	1991603.32	6089677.69
12	1991609.80	6089666.09
13	1991614.47	6089655.68

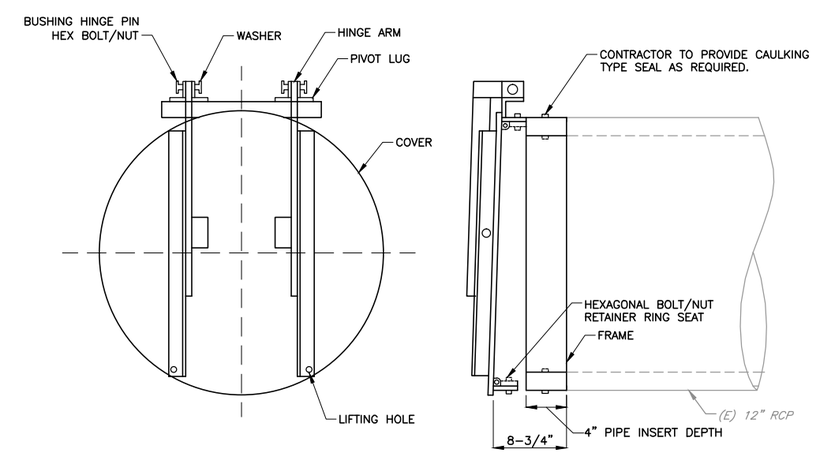

DETAIL 1 FLAP GATE DETAIL

NTS

REV	DESCRIPTION	DATE	APPR.

HDR

DATE: JULY 2015
DESIGN: L. JONES
DRAWN: H. SUAREZ
CHECKED: P. HRADILEK

ENGINEERING CERTIFICATION
REGISTERED PROFESSIONAL ENGINEER LANCE M. JONES C 68714 Exp. 6/30/11 CIVIL STATE OF CALIFORNIA
PROJECT ENGINEER DATE

SAN FRANCISQUITO CREEK JOINT POWERS AUTHORITY
ACCEPTED BY DISTRICT
PROJECT ENGINEER DATE

PROJECT NAME AND SHEET DESCRIPTION:
SAN FRANCISQUITO CREEK FLOOD REDUCTION, ECOSYSTEM RESTORATION, & RECREATION PROJECT
PLAN AND PROFILE/DETAIL
STORM DRAIN – MITIGATION AREA

SCALE: AS SHOWN
VERIFY SCALES: 0 1" BAR IS ONE INCH ON ORIGINAL DRAWING IF NOT ONE INCH ON THIS SHEET, ADJUST SCALES ACCORDINGLY
PROJECT NUMBER: 26284002
SHEET CODE: C-49
SHEET NUMBER: 64 OF 126

DOCUMENT NUMBER: SFC_LP-C-1028-XXXXXXX

USERNAME: BillShad Tue 08 Jul 2008 09:32am
FILENAME: C:\pwworking\sec\d0171341\C-49

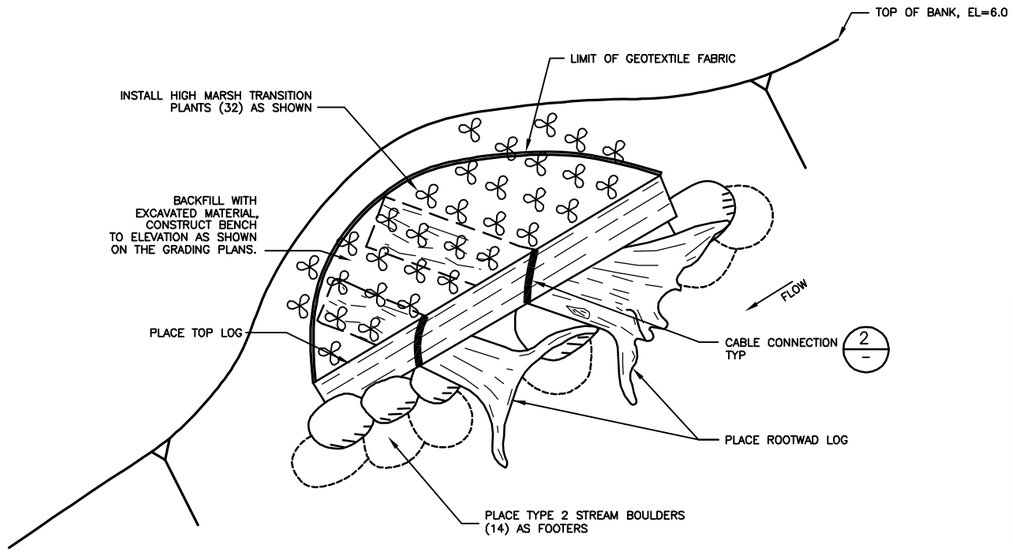

PLAN (BENCH CONSTRUCTION)

TABLE 1	
ROOT WAD BOLE CENTER ELEVATIONS	
STATION (C–LINE)	ELEVATION (ft)
32+00	3.5
35+00	4.1
38+00	4.5
41+00	5.2
44+00	5.4

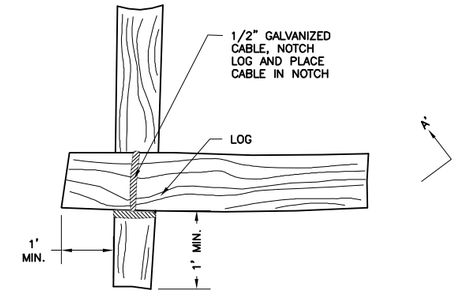

PLAN – LOGS PERPENDICULAR OR AT AN ANGLE

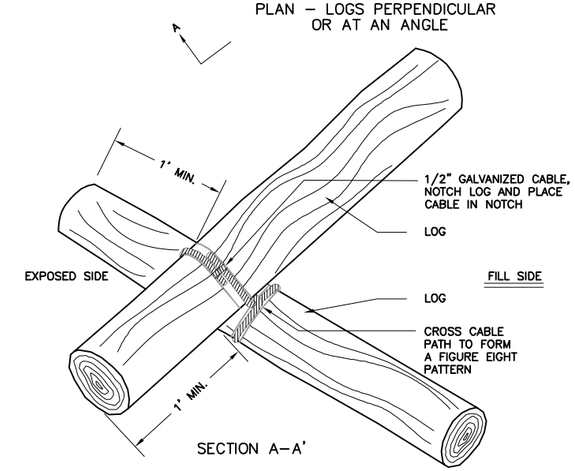

SECTION A–A'

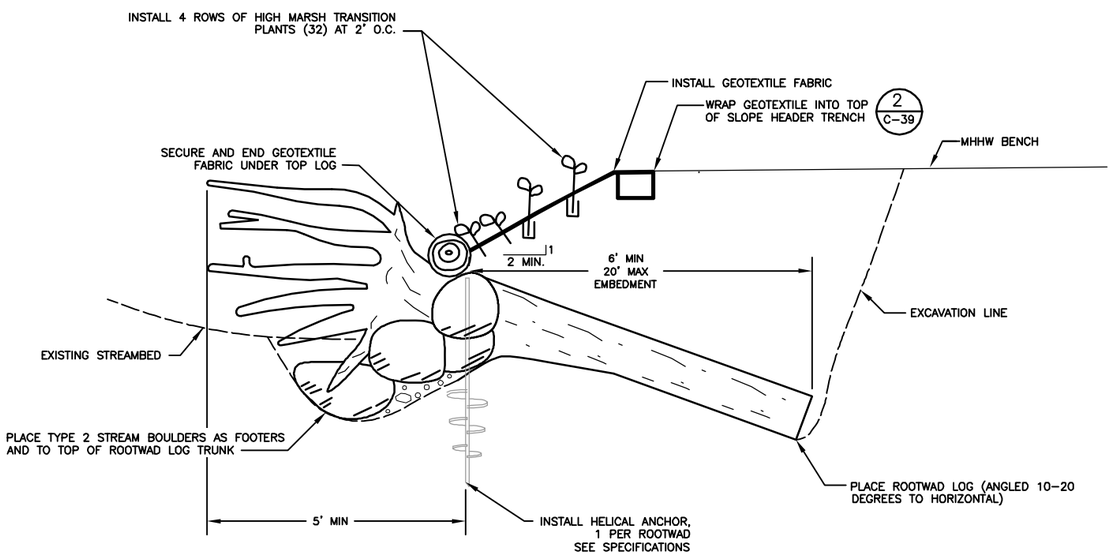

SECTION

DETAIL 1/C–12 ROOT WAD STRUCTURE

NTS

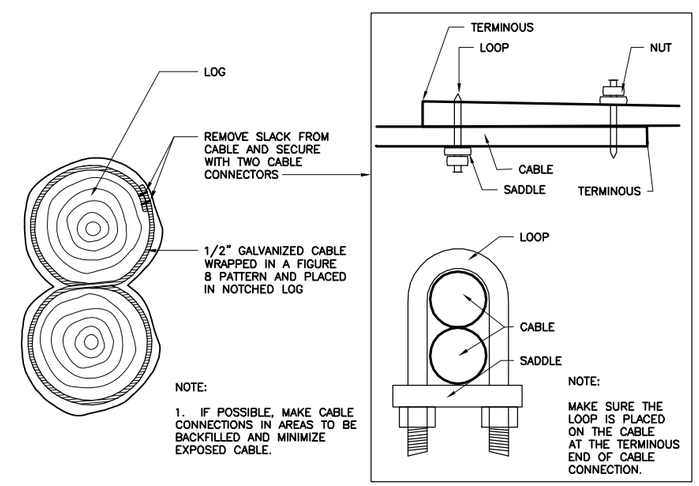

NOTE:

1. IF POSSIBLE, MAKE CABLE CONNECTIONS IN AREAS TO BE BACKFILLED AND MINIMIZE EXPOSED CABLE.

NOTE:

MAKE SURE THE LOOP IS PLACED ON THE CABLE AT THE TERMINOUS END OF CABLE CONNECTION.

DETAIL 2/– CABLE CONNECTION

NTS

USERNAME: BillShad Tue 08 Jul 2008 09:32am
FILENAME: C:\pwworking\sac\d0171341\C-50

DOCUMENT NUMBER: SFC_LP–C–1028–XXXXXXX

REV	DESCRIPTION	DATE	APPR.

HDR

DATE	JULY 2015
DESIGN	L. JONES
DRAWN	H. SUAREZ
CHECKED	P. HRADILEK

ENGINEERING CERTIFICATION

REGISTERED PROFESSIONAL ENGINEER LANCE M. JONES C 68374 Exp. 6/30/15 CIVIL STATE OF CALIFORNIA

PROJECT ENGINEER DATE

SAN FRANCISQUITO CREEK JOINT POWERS AUTHORITY

ACCEPTED BY DISTRICT

PROJECT ENGINEER DATE

PROJECT NAME AND SHEET DESCRIPTION:

SAN FRANCISQUITO CREEK FLOOD REDUCTION, ECOSYSTEM RESTORATION, & RECREATION PROJECT

ROOT WAD REVETMENT DETAILS

SCALE: AS SHOWN

VERIFY SCALES: 0 1"

BAR IS ONE INCH ON ORIGINAL DRAWING IF NOT ONE INCH ON THIS SHEET, ADJUST SCALES ACCORDINGLY

PROJECT NUMBER: 26284002

SHEET CODE: C–50

SHEET NUMBER: 65 OF 126

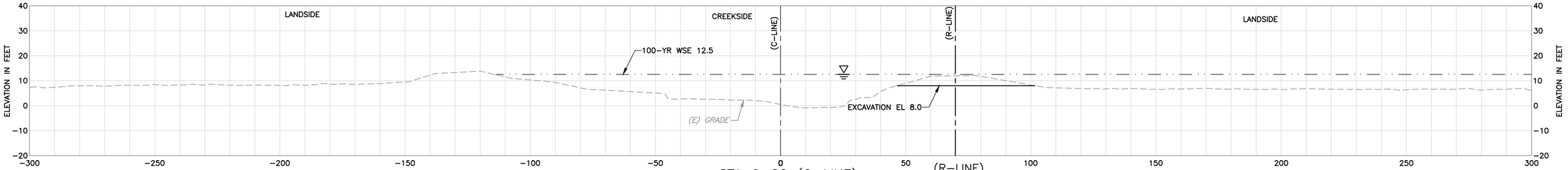

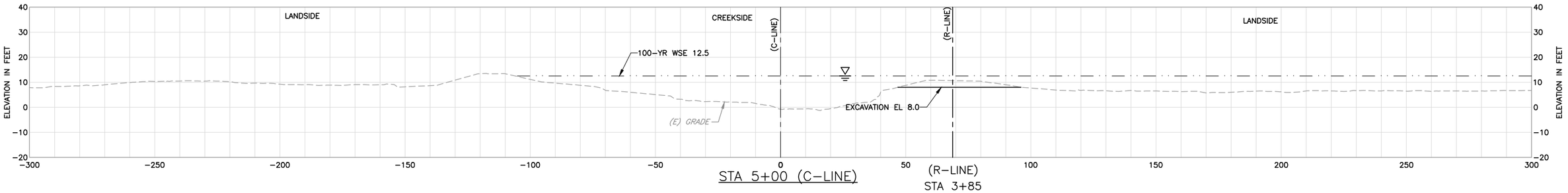

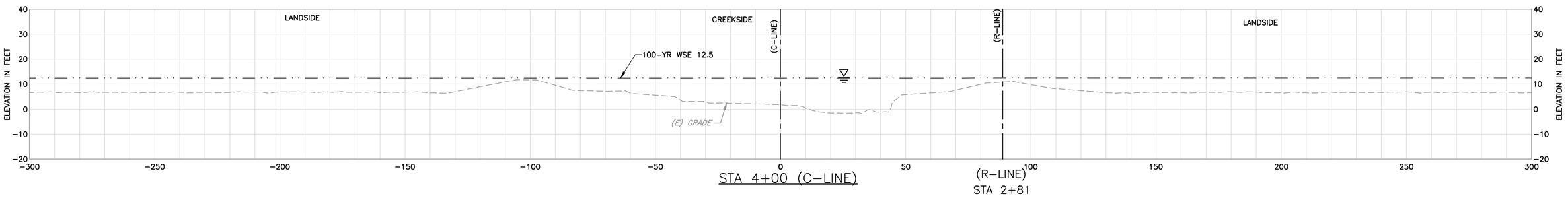

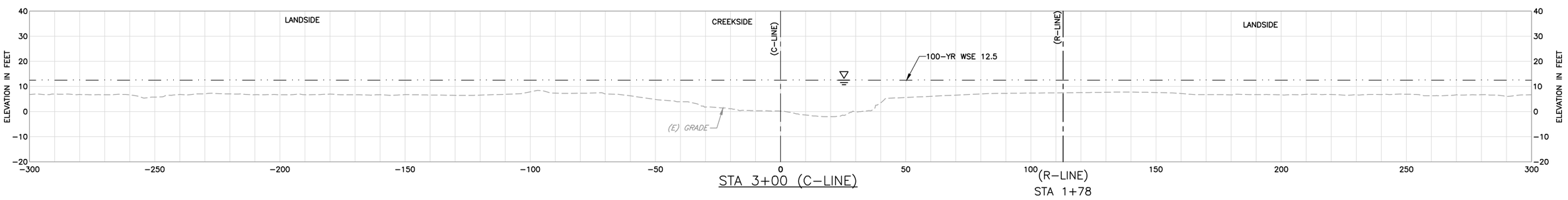

SHEET NOTES:

1 ALL SECTIONS LOOK UP STATION/UPSTREAM.

LEGEND:

EXISTING GRADE

FINISHED GRADE

100-YR WSE

REV	DESCRIPTION	DATE	APPR.

HDR

DATE	JULY 2015
DESIGN	L. JONES
DRAWN	H. SUAREZ
CHECKED	P. HRADILEK

ENGINEERING CERTIFICATION

REGISTERED PROFESSIONAL ENGINEER LANCE M. JONES 085744 Exp. 6/30/17 CIVIL STATE OF CALIFORNIA

PROJECT ENGINEER DATE

SAN FRANCISQUITO CREEK JOINT POWERS AUTHORITY

ACCEPTED BY DISTRICT

PROJECT ENGINEER DATE

PROJECT NAME AND SHEET DESCRIPTION:

SAN FRANCISQUITO CREEK FLOOD REDUCTION, ECOSYSTEM RESTORATION, & RECREATION PROJECT

CROSS SECTIONS – (C-LINE) STA 3+00 TO 6+00

SCALE H:1" = 20' V:1" = 20'

VERIFY SCALES 0 1"

BAR IS ONE INCH ON ORIGINAL DRAWING IF NOT ONE INCH ON THIS SHEET, ADJUST SCALES ACCORDINGLY

PROJECT NUMBER 26284002

SHEET CODE: X-1

SHEET NUMBER: 66 OF 126

DOCUMENT NUMBER: SFC_LP-C-1028-XXXXXXX

USERNAME: BillShad Tue 08 Jul 2008 09:32am
FILENAME: C:\pwworking\sec\d0171341\X-01

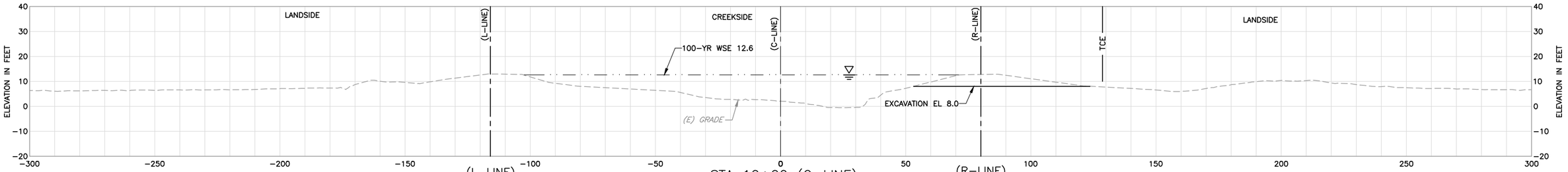

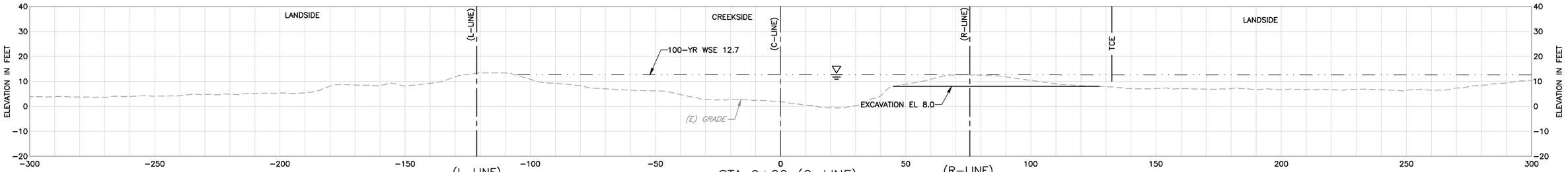

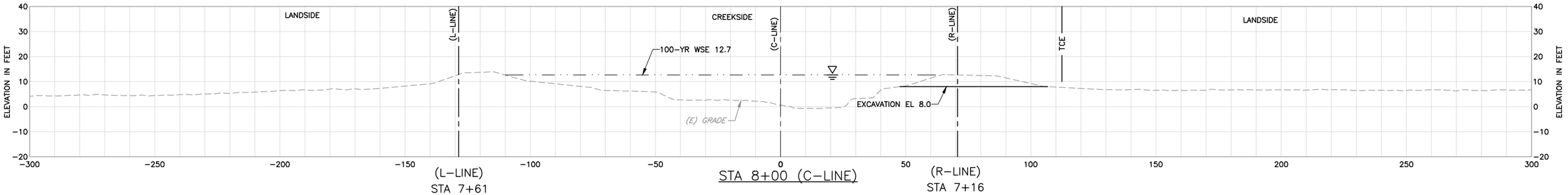

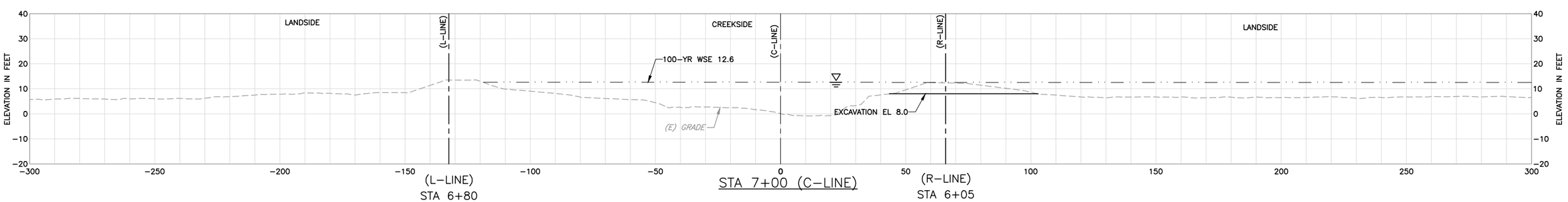

SHEET NOTES:

1 ALL SECTIONS LOOK UP STATION/UPSTREAM.

LEGEND:

EXISTING GRADE

FINISHED GRADE

100-YR WSE

REV	DESCRIPTION	DATE	APPR.

HDR

DATE	JULY 2015
DESIGN	L. JONES
DRAWN	H. SUAREZ
CHECKED	P. HRADILEK

ENGINEERING CERTIFICATION

REGISTERED PROFESSIONAL ENGINEER LANCE M. JONES C 68574 Exp. 6/30/17 CIVIL STATE OF CALIFORNIA

PROJECT ENGINEER DATE

SAN FRANCISQUITO CREEK JOINT POWERS AUTHORITY

ACCEPTED BY DISTRICT

PROJECT ENGINEER DATE

PROJECT NAME AND SHEET DESCRIPTION:

SAN FRANCISQUITO CREEK FLOOD REDUCTION, ECOSYSTEM RESTORATION, & RECREATION PROJECT

CROSS SECTIONS – (C-LINE) STA 7+00 TO 10+00

SCALE H:1" = 20' V:1" = 20'

VERIFY SCALES 0 1"

BAR IS ONE INCH ON ORIGINAL DRAWING IF NOT ONE INCH ON THIS SHEET, ADJUST SCALES ACCORDINGLY

PROJECT NUMBER 26284002

SHEET CODE: X-2

SHEET NUMBER: 67 OF 126

DOCUMENT NUMBER: SFC_LP-C-1028-XXXXXXX

USERNAME: BillShad Tue 08 Jul 2008 09:32am
FILENAME: C:\pwworking\sec\d0171341\X-02

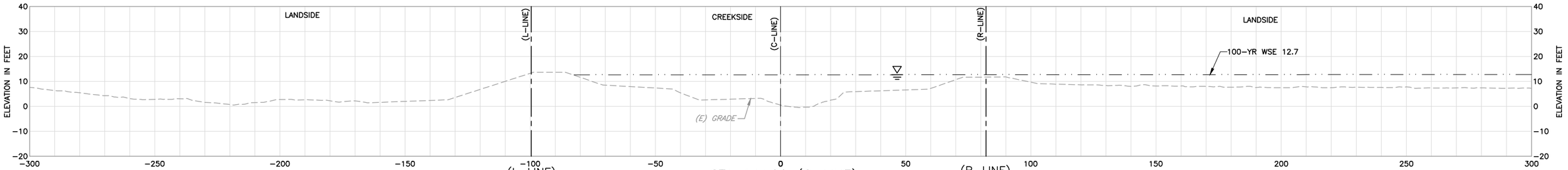

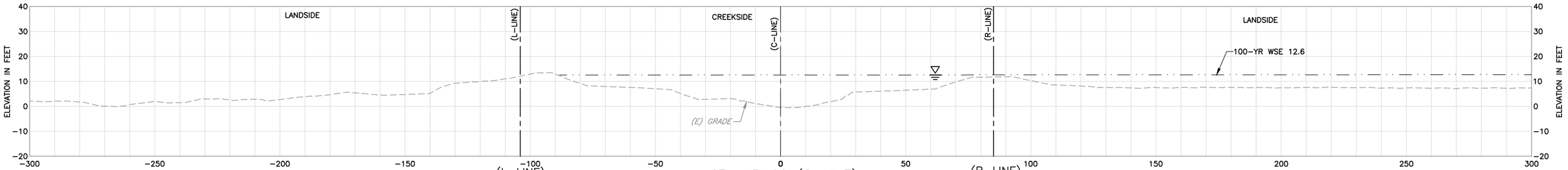

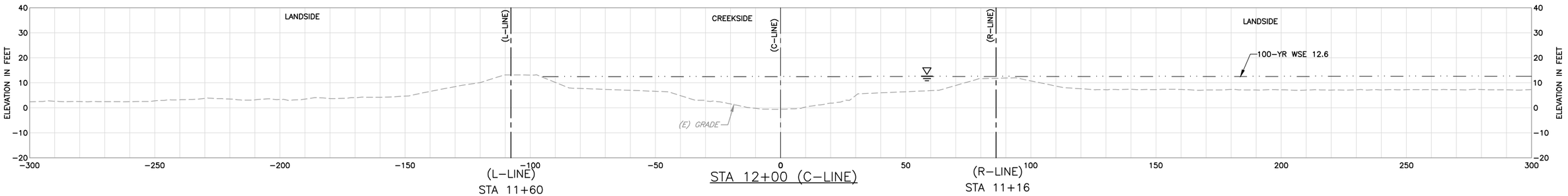

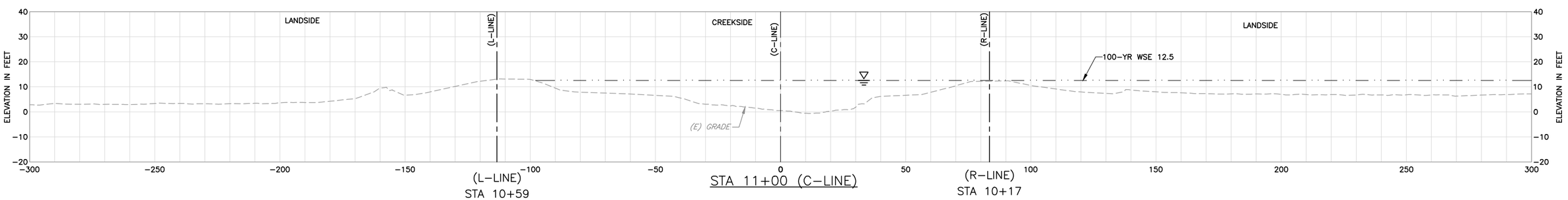

SHEET NOTES:

ALL SECTIONS LOOK UP STATION/UPSTREAM.

LEGEND:

EXISTING GRADE

FINISHED GRADE

100-YR WSE

REV	DESCRIPTION	DATE	APPR.

HDR

DATE	JULY 2015
DESIGN	L. JONES
DRAWN	H. SUAREZ
CHECKED	P. HRADILEK

ENGINEERING CERTIFICATION

REGISTERED PROFESSIONAL ENGINEER LANCE M. JONES 68574 Exp. 6/30/17 CIVIL STATE OF CALIFORNIA

PROJECT ENGINEER DATE

SAN FRANCISQUITO CREEK JOINT POWERS AUTHORITY

ACCEPTED BY DISTRICT

PROJECT ENGINEER DATE

PROJECT NAME AND SHEET DESCRIPTION:

SAN FRANCISQUITO CREEK FLOOD REDUCTION, ECOSYSTEM RESTORATION, & RECREATION PROJECT

CROSS SECTIONS – (C-LINE) STA 11+00 TO 14+00

SCALE H:1" = 20' V:1" = 20'

VERIFY SCALES 0 1"

BAR IS ONE INCH ON ORIGINAL DRAWING IF NOT ONE INCH ON THIS SHEET, ADJUST SCALES ACCORDINGLY

PROJECT NUMBER 26284002

SHEET CODE: X-3

SHEET NUMBER: 68 OF 126

DOCUMENT NUMBER: SFC_LP-C-1028-XXXXXXX

USERNAME: BillShad Tue 08 Jul 2008 09:32am
FILENAME: C:\pwworking\sec\d0171341\X-03

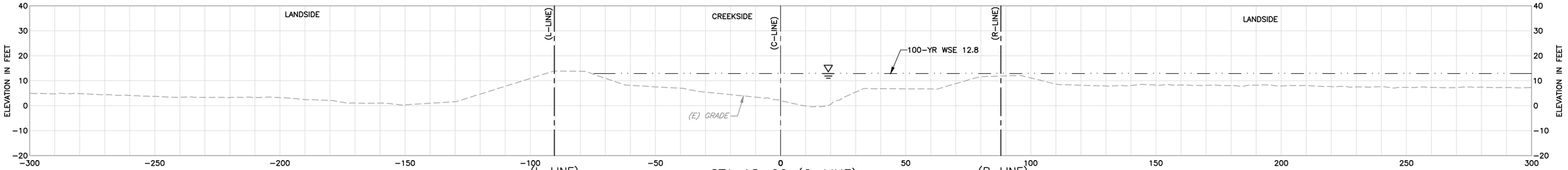

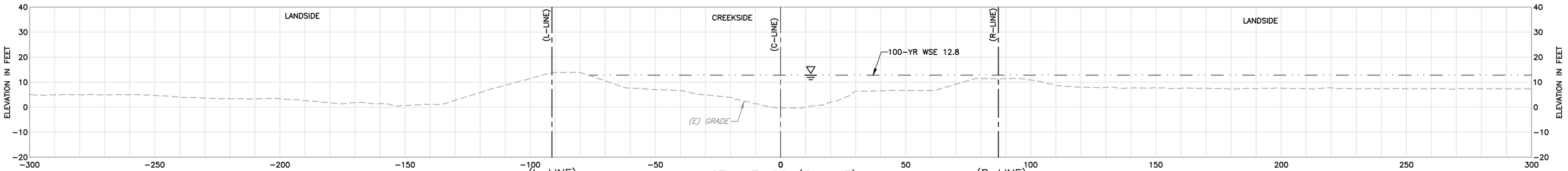

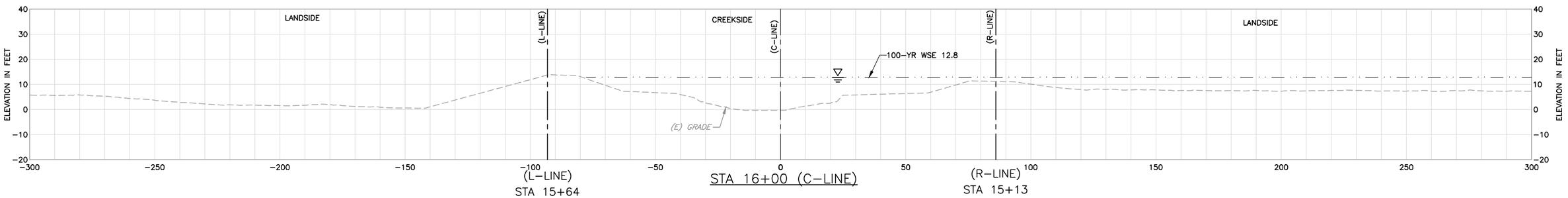

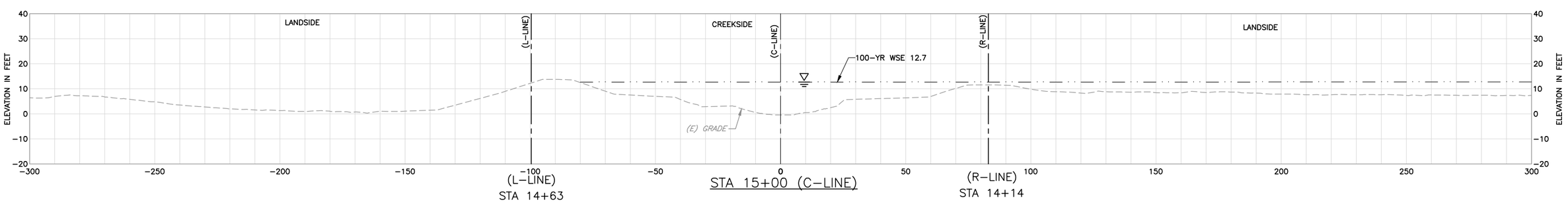

SHEET NOTES:

ALL SECTIONS LOOK UP STATION/UPSTREAM.

LEGEND:

EXISTING GRADE

FINISHED GRADE

100–YR WSE

REV	DESCRIPTION	DATE	APPR.

HDR

DATE	JULY 2015
DESIGN	L. JONES
DRAWN	H. SUAREZ
CHECKED	P. HRADILEK

ENGINEERING CERTIFICATION

REGISTERED PROFESSIONAL ENGINEER LANCE M. JONES C 68574 Exp. 6/30/17 CIVIL STATE OF CALIFORNIA

PROJECT ENGINEER DATE

SAN FRANCISQUITO CREEK JOINT POWERS AUTHORITY

ACCEPTED BY DISTRICT

PROJECT ENGINEER DATE

PROJECT NAME AND SHEET DESCRIPTION:

SAN FRANCISQUITO CREEK FLOOD REDUCTION, ECOSYSTEM RESTORATION, & RECREATION PROJECT

CROSS SECTIONS – (C–LINE) STA 15+00 TO 18+00

SCALE H:1" = 20' V:1" = 20'

VERIFY SCALES 0 1"

BAR IS ONE INCH ON ORIGINAL DRAWING IF NOT ONE INCH ON THIS SHEET, ADJUST SCALES ACCORDINGLY

PROJECT NUMBER 26284002

SHEET CODE: X–4

SHEET NUMBER: 69 OF 126

DOCUMENT NUMBER: SFC_LP–C–1028–XXXXXXX

USERNAME: BillShad Tue 08 Jul 2008 09:32am
FILENAME: C:\pwworking\sec\d0171341\X-04

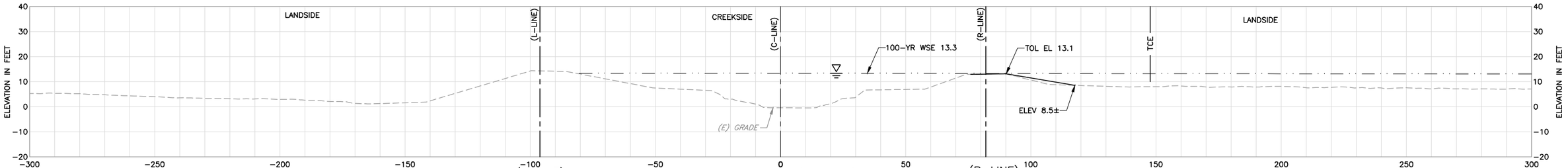

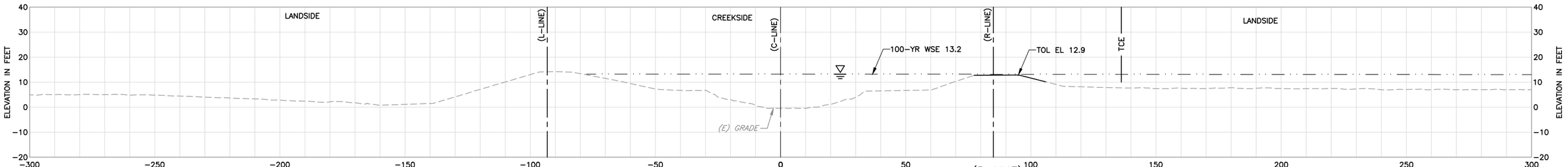

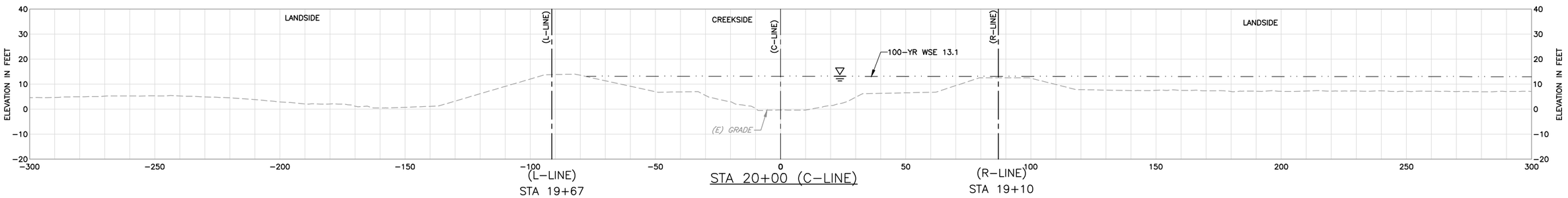

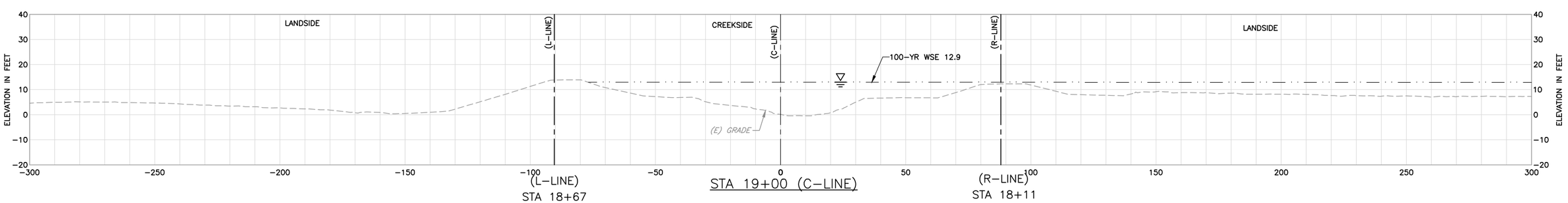

SHEET NOTES:

ALL SECTIONS LOOK UP STATION/UPSTREAM.

LEGEND:

EXISTING GRADE

FINISHED GRADE

100-YR WSE

REV	DESCRIPTION	DATE	APPR.

HDR

DATE: JULY 2015
DESIGN: L. JONES
DRAWN: H. SUAREZ
CHECKED: P. HRADILEK

ENGINEERING CERTIFICATION

REGISTERED PROFESSIONAL ENGINEER LANCE M. JONES 085744 EXP. 6/30/17 CIVIL STATE OF CALIFORNIA

PROJECT ENGINEER DATE

SAN FRANCISQUITO CREEK JOINT POWERS AUTHORITY

ACCEPTED BY DISTRICT

PROJECT ENGINEER DATE

PROJECT NAME AND SHEET DESCRIPTION:

SAN FRANCISQUITO CREEK FLOOD REDUCTION, ECOSYSTEM RESTORATION, & RECREATION PROJECT

CROSS SECTIONS – (C-LINE) STA 19+00 TO 22+00

SCALE H:1" = 20' V:1" = 20'

VERIFY SCALES 0 1"

BAR IS ONE INCH ON ORIGINAL DRAWING IF NOT ONE INCH ON THIS SHEET, ADJUST SCALES ACCORDINGLY

PROJECT NUMBER 26284002

SHEET CODE: X-5

SHEET NUMBER: 70 OF 126

DOCUMENT NUMBER: SFC_LP-C-1028-XXXXXXX

USERNAME: BillShad Tue 08 Jul 2008 09:32am
FILENAME: C:\pwworking\sec\d0171341\X-05

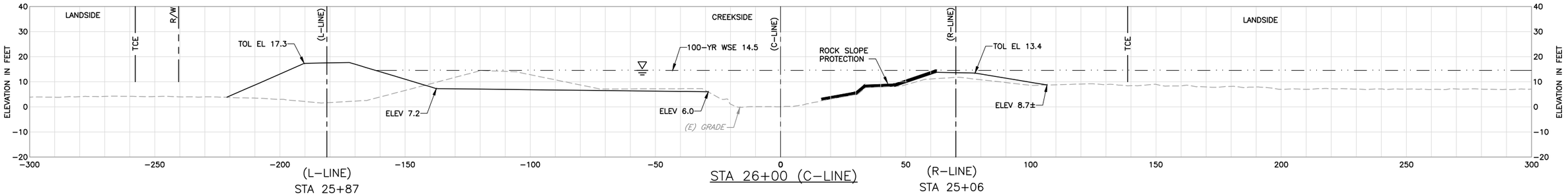

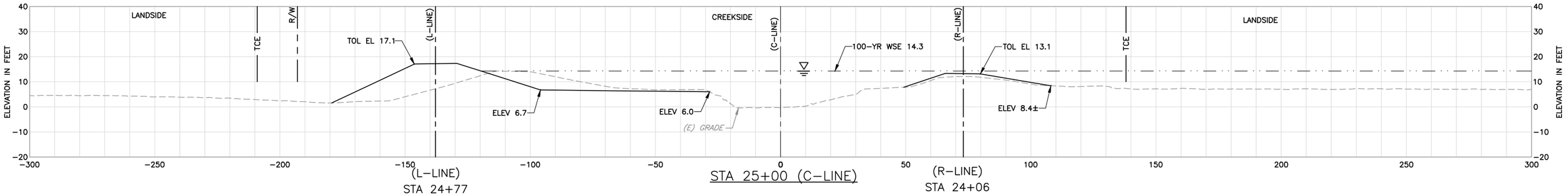

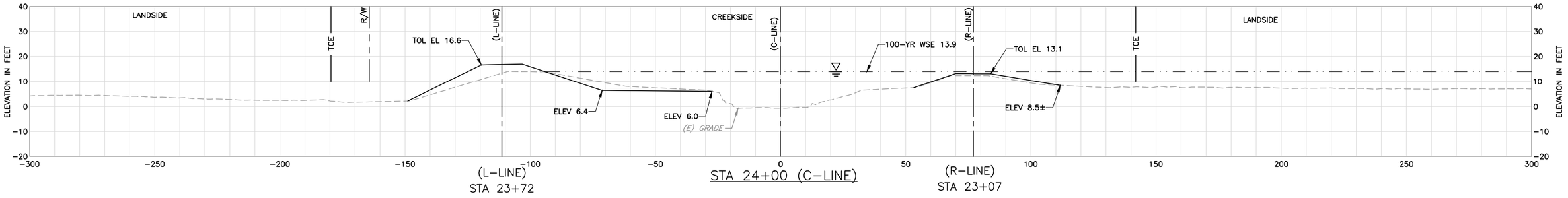

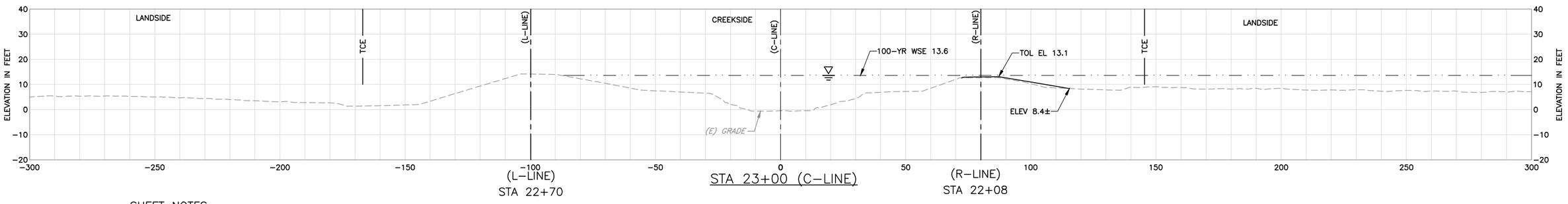

SHEET NOTES:

1 ALL SECTIONS LOOK UP STATION/UPSTREAM.

LEGEND:

EXISTING GRADE

FINISHED GRADE

100-YR WSE

REV	DESCRIPTION	DATE	APPR.

HDR

DATE JULY 2015

DESIGN L. JONES

DRAWN H. SUAREZ

CHECKED P. HRADILEK

ENGINEERING CERTIFICATION

REGISTERED PROFESSIONAL ENGINEER LANCE M. JONES 68574 Exp. 6/30/17 CIVIL STATE OF CALIFORNIA

PROJECT ENGINEER DATE

SAN FRANCISQUITO CREEK JOINT POWERS AUTHORITY

ACCEPTED BY DISTRICT

PROJECT ENGINEER DATE

PROJECT NAME AND SHEET DESCRIPTION:

SAN FRANCISQUITO CREEK FLOOD REDUCTION, ECOSYSTEM RESTORATION, & RECREATION PROJECT

CROSS SECTIONS – (C-LINE) STA 23+00 TO 26+00

SCALE H:1" = 20' V:1" = 20'

VERIFY SCALES 0 1"

BAR IS ONE INCH ON ORIGINAL DRAWING IF NOT ONE INCH ON THIS SHEET, ADJUST SCALES ACCORDINGLY

PROJECT NUMBER 26284002

SHEET CODE: X-6

SHEET NUMBER: 71 OF 126

DOCUMENT NUMBER: SFC_LP-C-1028-XXXXXXX

USERNAME: BRISHad Tue 08 Jul 2008 09:32am
FILENAME: C:\pwworking\sec\d0171341\X-06

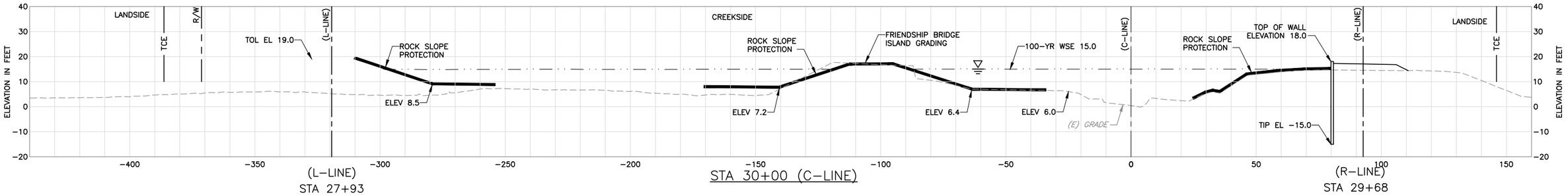

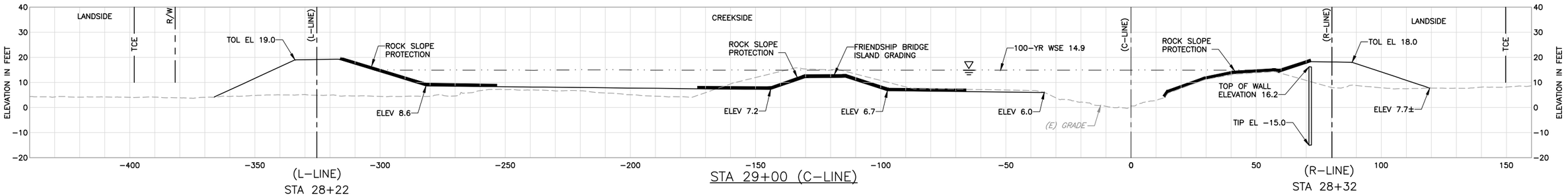

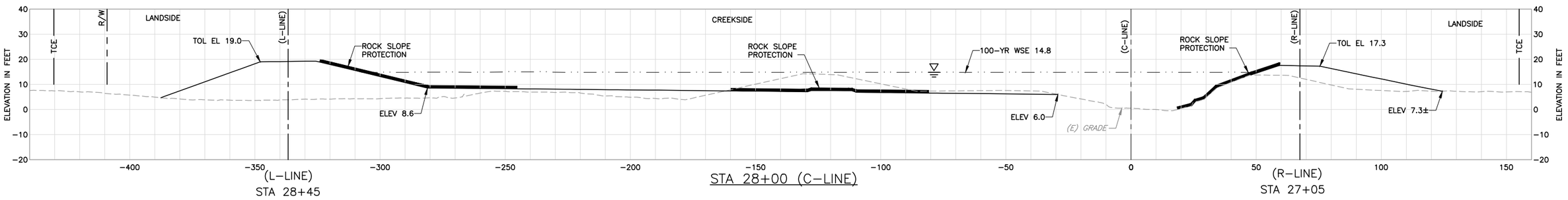

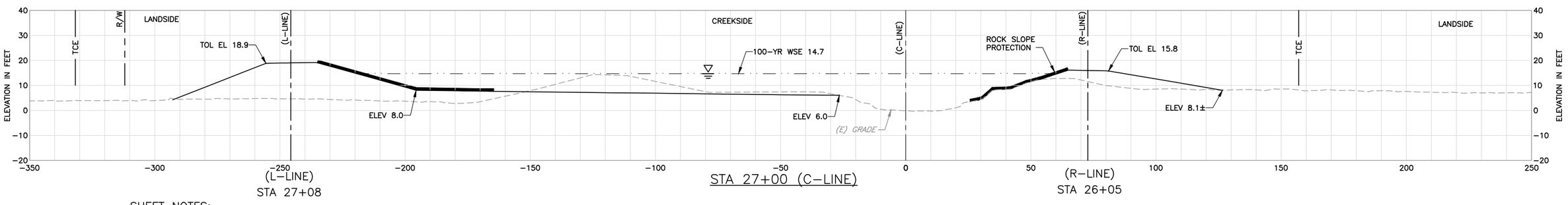

SHEET NOTES:

1 ALL SECTIONS LOOK UP STATION/UPSTREAM.

LEGEND:

EXISTING GRADE

FINISHED GRADE

100-YR WSE

REV	DESCRIPTION	DATE	APPR.

HDR

DATE JULY 2015
DESIGN L. JONES
DRAWN H. SUAREZ
CHECKED P. HRADILEK

ENGINEERING CERTIFICATION
REGISTERED PROFESSIONAL ENGINEER LANCE M. JONES C 68574 Exp. 6/30/16 CIVIL STATE OF CALIFORNIA
PROJECT ENGINEER DATE

SAN FRANCISQUITO CREEK JOINT POWERS AUTHORITY

ACCEPTED BY DISTRICT

PROJECT ENGINEER DATE

PROJECT NAME AND SHEET DESCRIPTION:

SAN FRANCISQUITO CREEK FLOOD REDUCTION, ECOSYSTEM RESTORATION, & RECREATION PROJECT

CROSS SECTIONS – (C-LINE) STA 27+00 TO 30+00

SCALE H:1" = 20' V:1" = 20'

VERIFY SCALES 0 1"

BAR IS ONE INCH ON ORIGINAL DRAWING IF NOT ONE INCH ON THIS SHEET, ADJUST SCALES ACCORDINGLY

PROJECT NUMBER 26284002

SHEET CODE: X-7

SHEET NUMBER: 72 OF 126

DOCUMENT NUMBER: SFC_LP-C-1028-XXXXXXX

USERNAME: BillShad Tue 08 Jul 2008 09:32am
FILENAME: C:\pwworking\sec\d0171341\X-07

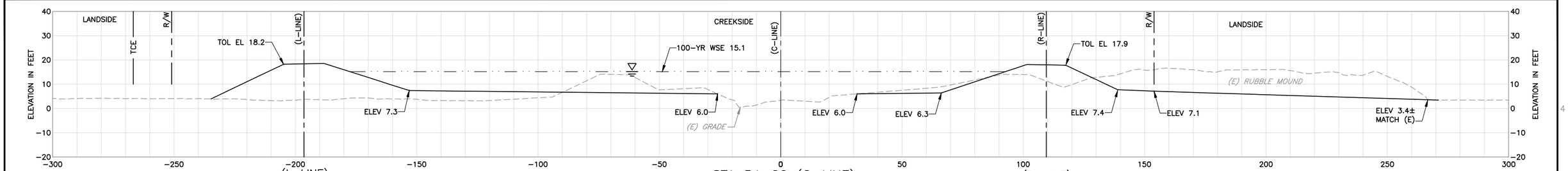

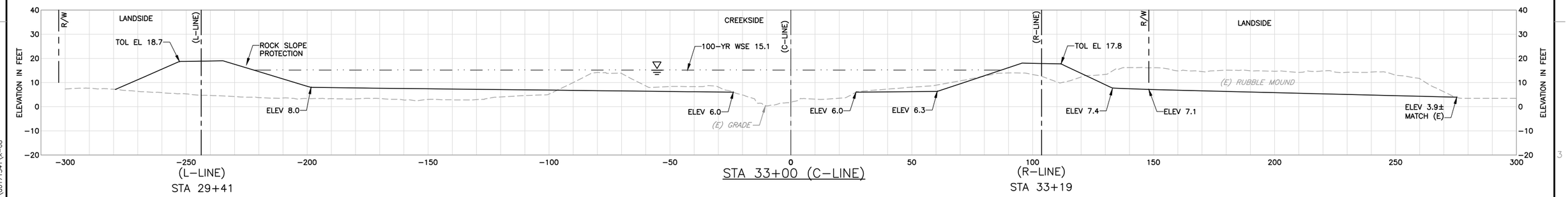

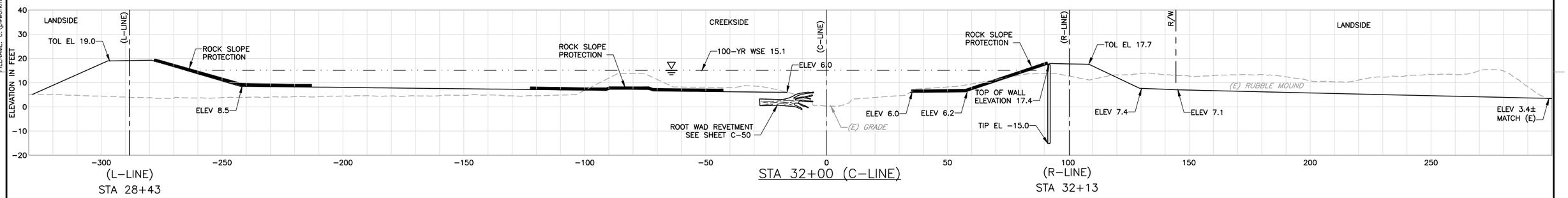

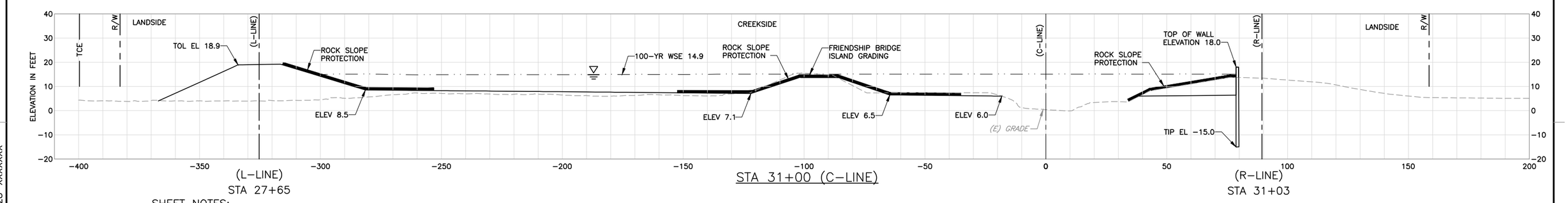

SHEET NOTES:

1 ALL SECTIONS LOOK UP STATION/UPSTREAM.

LEGEND:

EXISTING GRADE

FINISHED GRADE

100-YR WSE

REV	DESCRIPTION	DATE	APPR.

HDR

DATE: JULY 2015
DESIGN: L. JONES
DRAWN: H. SUAREZ
CHECKED: P. HRADILEK

ENGINEERING CERTIFICATION

REGISTERED PROFESSIONAL ENGINEER LANCE M. JONES C 065740 EXP. 6/30/17 CIVIL STATE OF CALIFORNIA

PROJECT ENGINEER DATE

SAN FRANCISQUITO CREEK JOINT POWERS AUTHORITY

ACCEPTED BY DISTRICT

PROJECT ENGINEER DATE

PROJECT NAME AND SHEET DESCRIPTION:

SAN FRANCISQUITO CREEK FLOOD REDUCTION, ECOSYSTEM RESTORATION, & RECREATION PROJECT

CROSS SECTIONS – (C-LINE) STA 31+00 TO 34+00

SCALE H:1" = 20' V:1" = 20'

VERIFY SCALES 0 1"

BAR IS ONE INCH ON ORIGINAL DRAWING IF NOT ONE INCH ON THIS SHEET, ADJUST SCALES ACCORDINGLY

PROJECT NUMBER 26284002

SHEET CODE: X-8

SHEET NUMBER: 73 OF 126

DOCUMENT NUMBER: SFC_LP-C-1028-XXXXXXX

USERNAME: BillShad Tue 08 Jul 2008 09:32am
FILENAME: C:\pwworking\sac\d0171341\X-08

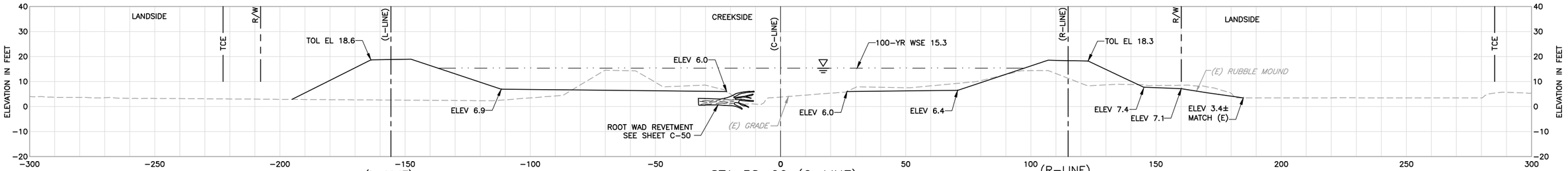

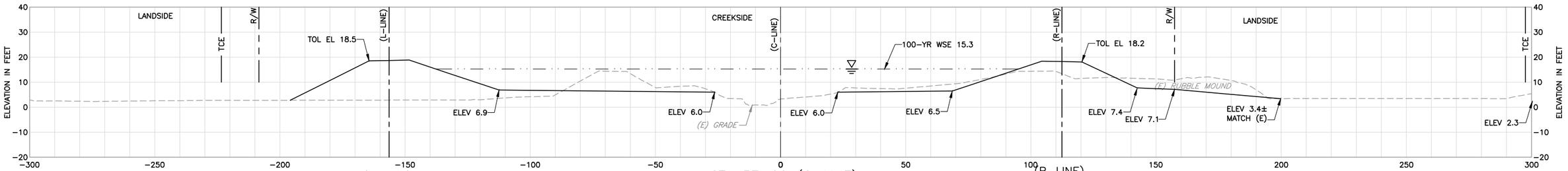

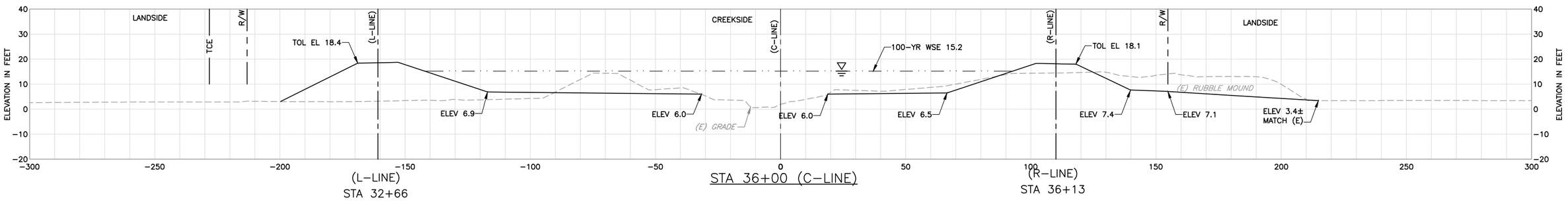

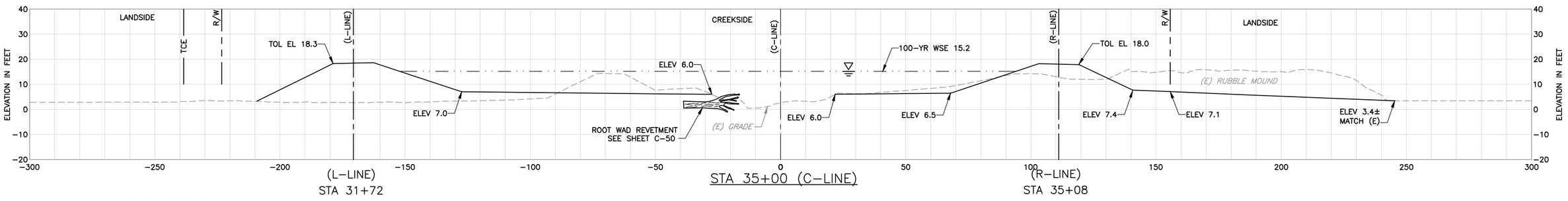

SHEET NOTES:

1 ALL SECTIONS LOOK UP STATION/UPSTREAM.

LEGEND:

EXISTING GRADE

FINISHED GRADE

100-YR WSE

REV	DESCRIPTION	DATE	APPR.

HDR

DATE JULY 2015

DESIGN L. JONES

DRAWN H. SUAREZ

CHECKED P. HRADILEK

ENGINEERING CERTIFICATION

REGISTERED PROFESSIONAL ENGINEER LANCE M. JONES 68574 Exp. 06/30/17 CIVIL STATE OF CALIFORNIA

PROJECT ENGINEER DATE

SAN FRANCISQUITO CREEK JOINT POWERS AUTHORITY

ACCEPTED BY DISTRICT

PROJECT ENGINEER DATE

PROJECT NAME AND SHEET DESCRIPTION:

SAN FRANCISQUITO CREEK FLOOD REDUCTION, ECOSYSTEM RESTORATION, & RECREATION PROJECT

CROSS SECTIONS – (C-LINE) STA 35+00 TO 38+00

SCALE H:1" = 20' V:1" = 20'

VERIFY SCALES 0 1"

BAR IS ONE INCH ON ORIGINAL DRAWING IF NOT ONE INCH ON THIS SHEET, ADJUST SCALES ACCORDINGLY

PROJECT NUMBER 26284002

SHEET CODE: X-9

SHEET NUMBER: 74 OF 126

DOCUMENT NUMBER: SFC_LP-C-1028-XXXXXX

USERNAME: BillShad Tue 08 Jul 2008 09:32am
FILENAME: C:\pwworking\sec\d0171341\X-09

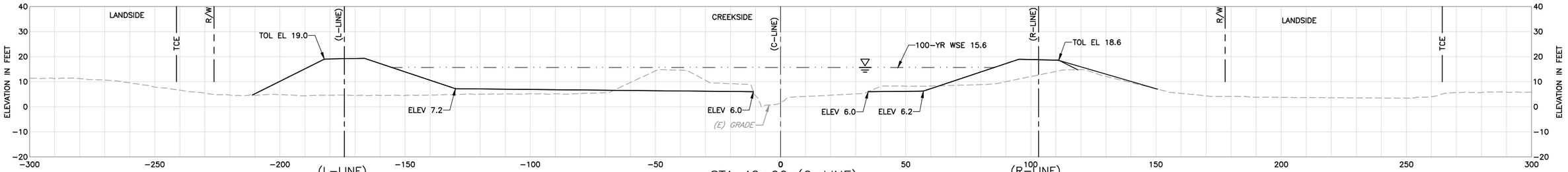

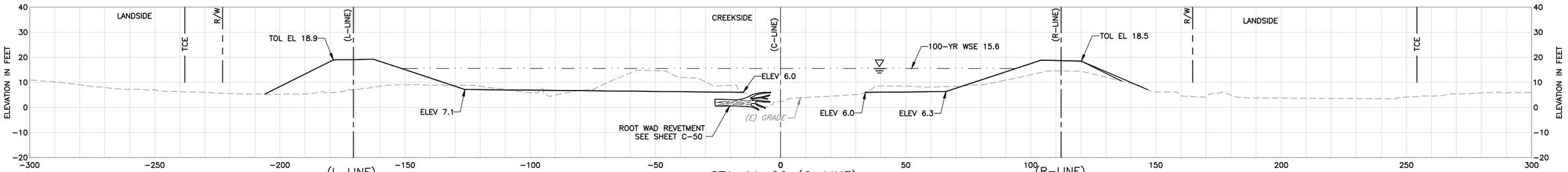

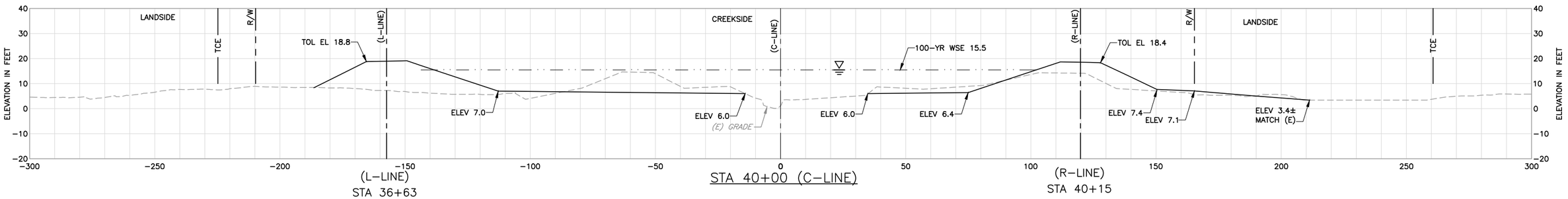

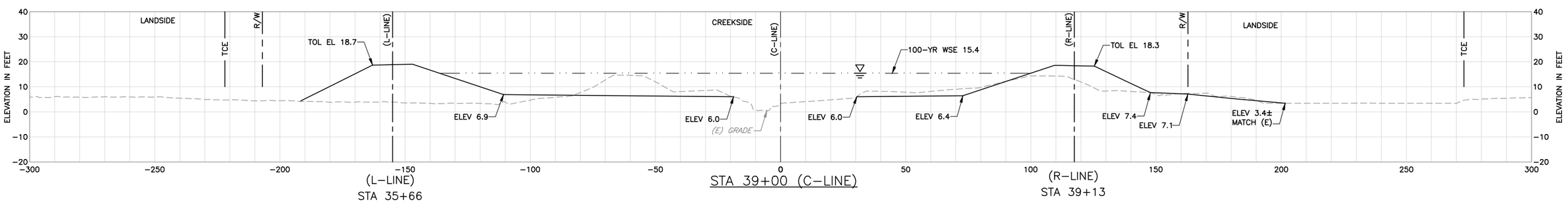

SHEET NOTES:

1 ALL SECTIONS LOOK UP STATION/UPSTREAM.

LEGEND:

EXISTING GRADE

FINISHED GRADE

100-YR WSE

REV	DESCRIPTION	DATE	APPR.

DOCUMENT NUMBER: SFC_LP-C-1028-XXXXXX

USERNAME: BillShad Tue 08 Jul 2008 09:32am
FILENAME: C:\pwworking\sac\d0171341\X-10

HDR

DATE	JULY 2015
DESIGN	L. JONES
DRAWN	H. SUAREZ
CHECKED	P. HRADILEK

ENGINEERING CERTIFICATION

REGISTERED PROFESSIONAL ENGINEER LANCE M. JONES 08574 Exp. 06/30/17 CIVIL STATE OF CALIFORNIA

PROJECT ENGINEER DATE

SAN FRANCISQUITO CREEK
JOINT POWERS AUTHORITY

ACCEPTED BY DISTRICT

PROJECT ENGINEER DATE

PROJECT NAME AND SHEET DESCRIPTION:

SAN FRANCISQUITO CREEK FLOOD REDUCTION, ECOSYSTEM RESTORATION, & RECREATION PROJECT

CROSS SECTIONS – (C-LINE) STA 39+00 TO 42+00

SCALE
H:1" = 20'
V:1" = 20'

VERIFY SCALES
0 1"
BAR IS ONE INCH ON ORIGINAL DRAWING IF NOT ONE INCH ON THIS SHEET, ADJUST SCALES ACCORDINGLY

PROJECT NUMBER
26284002

SHEET CODE:
X-10

SHEET NUMBER:
75 OF 126

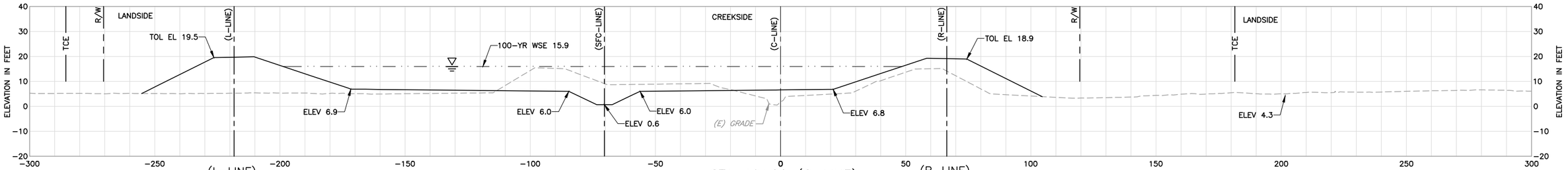

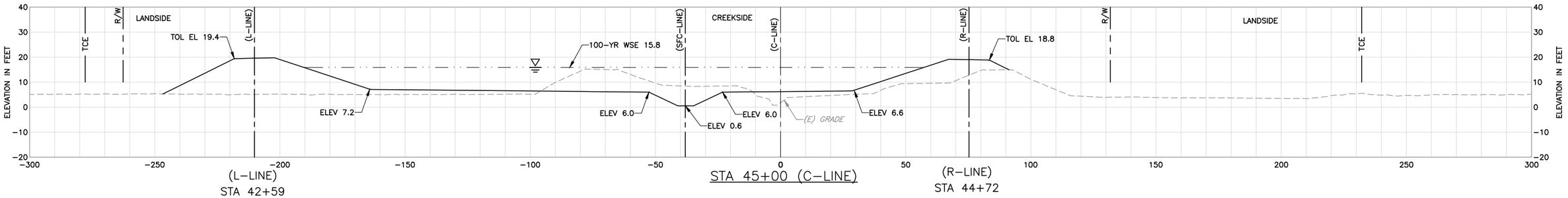

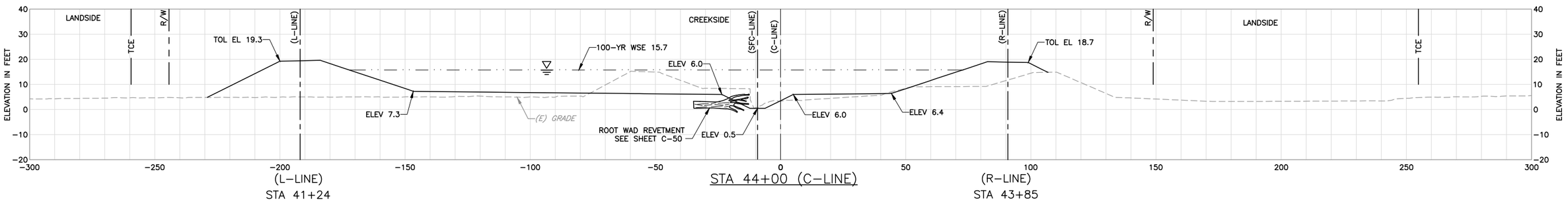

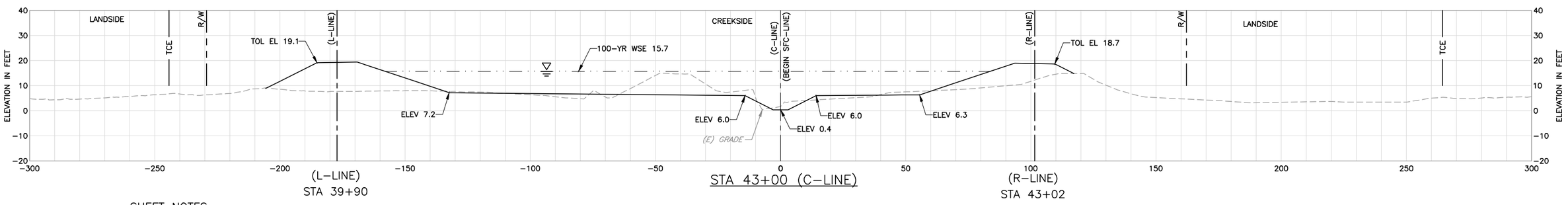

SHEET NOTES:

1 ALL SECTIONS LOOK UP STATION/UPSTREAM.

LEGEND:

EXISTING GRADE

FINISHED GRADE

100-YR WSE

REV	DESCRIPTION	DATE	APPR.

HDR

DATE JULY 2015

DESIGN L. JONES

DRAWN H. SUAREZ

CHECKED P. HRADILEK

ENGINEERING CERTIFICATION

REGISTERED PROFESSIONAL ENGINEER LANCE M. JONES C 68574 Exp. 6/30/16 CIVIL STATE OF CALIFORNIA

PROJECT ENGINEER DATE

SAN FRANCISQUITO CREEK JOINT POWERS AUTHORITY

ACCEPTED BY DISTRICT

PROJECT ENGINEER DATE

PROJECT NAME AND SHEET DESCRIPTION:

SAN FRANCISQUITO CREEK FLOOD REDUCTION, ECOSYSTEM RESTORATION, & RECREATION PROJECT

CROSS SECTIONS – (C-LINE) STA 43+00 TO 46+00

SCALE H:1" = 20' V:1" = 20'

VERIFY SCALES 0 1"

BAR IS ONE INCH ON ORIGINAL DRAWING IF NOT ONE INCH ON THIS SHEET, ADJUST SCALES ACCORDINGLY

PROJECT NUMBER 26284002

SHEET CODE: X-11

SHEET NUMBER: 76 OF 126

DOCUMENT NUMBER: SFC_LP-C-1028-XXXXXXX

USERNAME: BillShad Tue 08 Jul 2008 09:32am
FILENAME: C:\pwworking\sec\d0171341\X-11

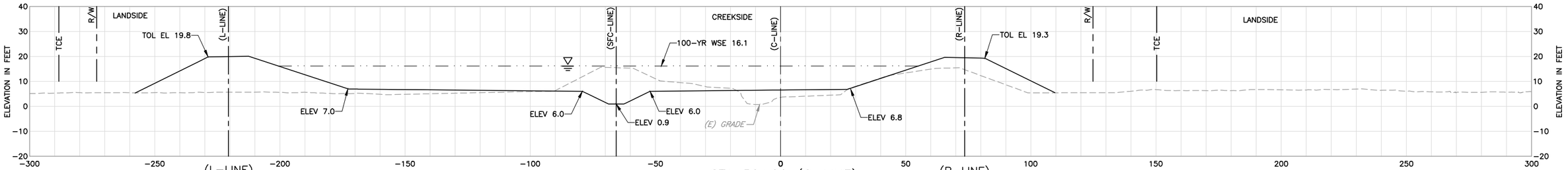

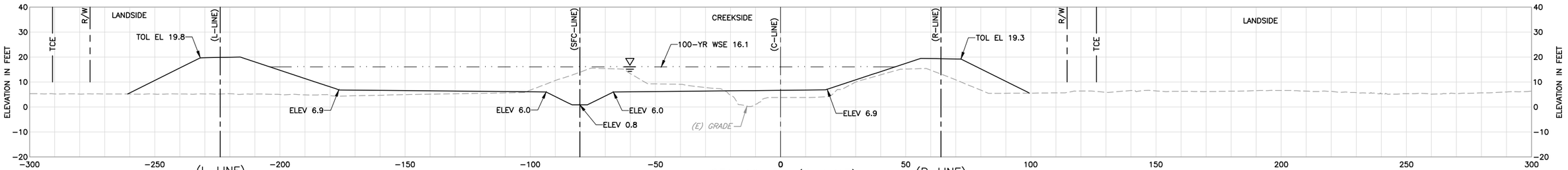

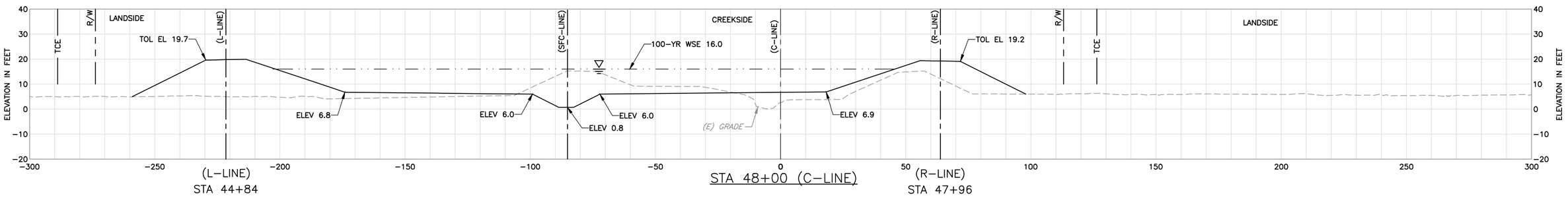

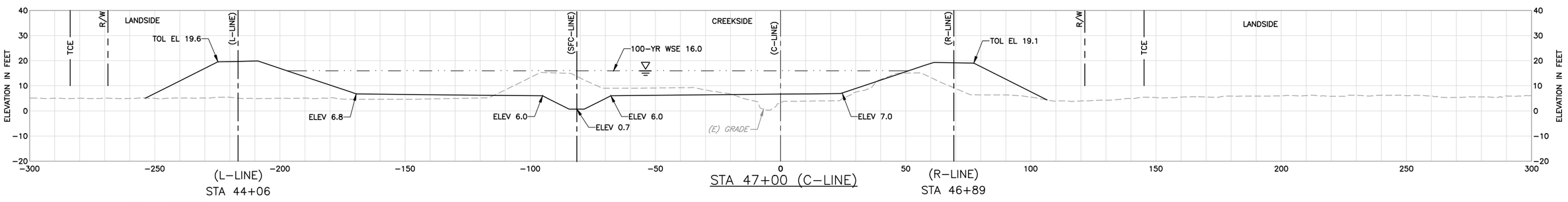

SHEET NOTES:

1 ALL SECTIONS LOOK UP STATION/UPSTREAM.

LEGEND:

EXISTING GRADE

FINISHED GRADE

100-YR WSE

REV	DESCRIPTION	DATE	APPR.

HDR

DATE JULY 2015
DESIGN L. JONES
DRAWN H. SUAREZ
CHECKED P. HRADILEK

ENGINEERING CERTIFICATION
REGISTERED PROFESSIONAL ENGINEER LANCE M. JONES C 68714 Exp. 6/30/17 CIVIL STATE OF CALIFORNIA
PROJECT ENGINEER DATE

SAN FRANCISQUITO CREEK JOINT POWERS AUTHORITY

ACCEPTED BY DISTRICT

PROJECT ENGINEER DATE

PROJECT NAME AND SHEET DESCRIPTION:

SAN FRANCISQUITO CREEK FLOOD REDUCTION, ECOSYSTEM RESTORATION, & RECREATION PROJECT

CROSS SECTIONS – (C-LINE) STA 47+00 TO 50+00

SCALE H:1" = 20' V:1" = 20'

VERIFY SCALES 0 1"

BAR IS ONE INCH ON ORIGINAL DRAWING IF NOT ONE INCH ON THIS SHEET, ADJUST SCALES ACCORDINGLY

PROJECT NUMBER 26284002

SHEET CODE: X-12

SHEET NUMBER: 77 OF 126

DOCUMENT NUMBER: SFC_LP-C-1028-XXXXXXX

USERNAME: BillShad Tue 08 Jul 2008 09:32am
FILENAME: C:\pwworking\sec\d0171341\X-12

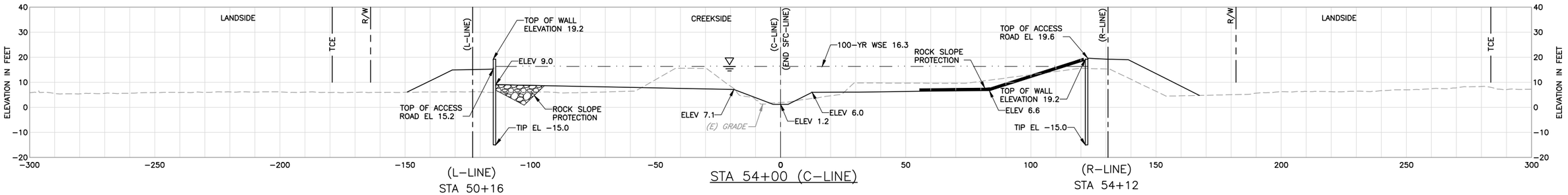

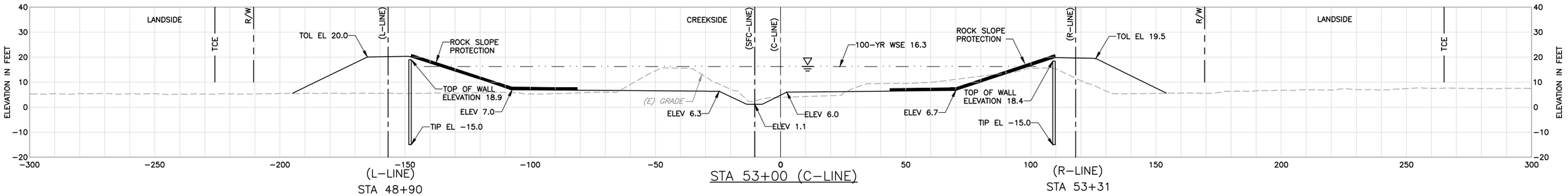

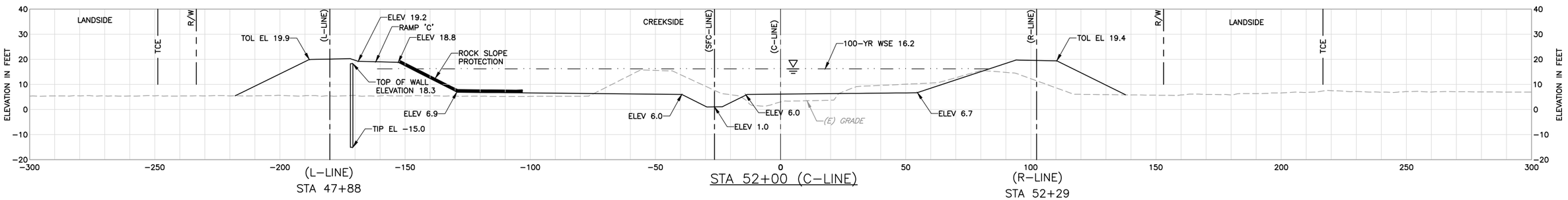

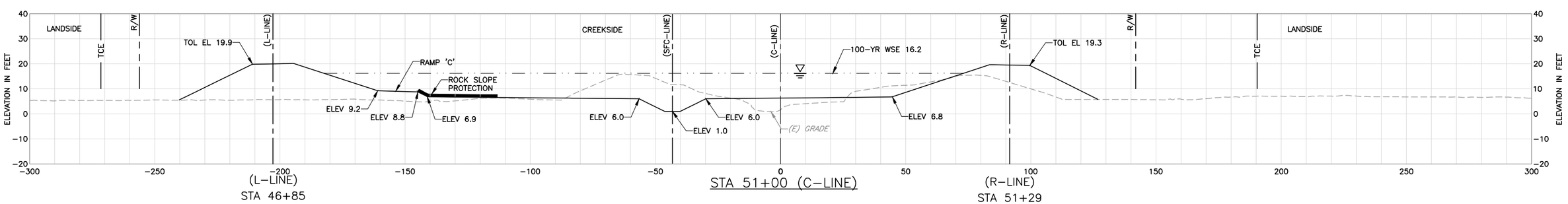

SHEET NOTES:

1 ALL SECTIONS LOOK UP STATION/UPSTREAM.

LEGEND:

EXISTING GRADE

FINISHED GRADE

100-YR WSE

REV	DESCRIPTION	DATE	APPR.

HDR

DATE	ENGINEERING CERTIFICATION
JULY 2015	
DESIGN L. JONES	
DRAWN H. SUAREZ	
CHECKED P. HRADILEK	PROJECT ENGINEER DATE

REGISTERED PROFESSIONAL ENGINEER LANCE M. JONES 08574 Exp. 6/30/11 CIVIL STATE OF CALIFORNIA

SAN FRANCISQUITO CREEK JOINT POWERS AUTHORITY

ACCEPTED BY DISTRICT

PROJECT ENGINEER DATE

PROJECT NAME AND SHEET DESCRIPTION:

SAN FRANCISQUITO CREEK FLOOD REDUCTION, ECOSYSTEM RESTORATION, & RECREATION PROJECT

CROSS SECTIONS – (C-LINE) STA 51+00 TO 54+00

SCALE H:1" = 20' V:1" = 20'

VERIFY SCALES 0 1"

BAR IS ONE INCH ON ORIGINAL DRAWING IF NOT ONE INCH ON THIS SHEET, ADJUST SCALES ACCORDINGLY

PROJECT NUMBER 26284002

SHEET CODE: X-13

SHEET NUMBER: 78 OF 126

DOCUMENT NUMBER: SFC_LP-C-1028-XXXXXXX

USERNAME: BillShad Tue 08 Jul 2008 09:32am
FILENAME: C:\pwworking\sac\d0171341\X-13

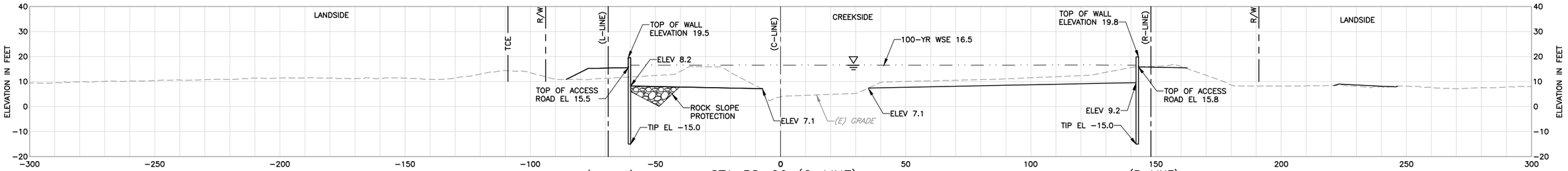

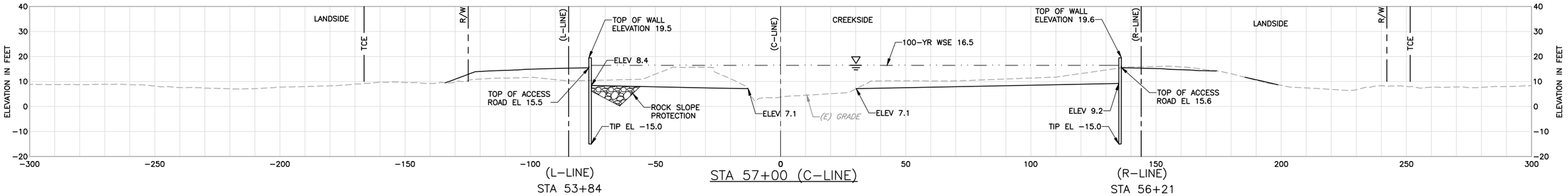

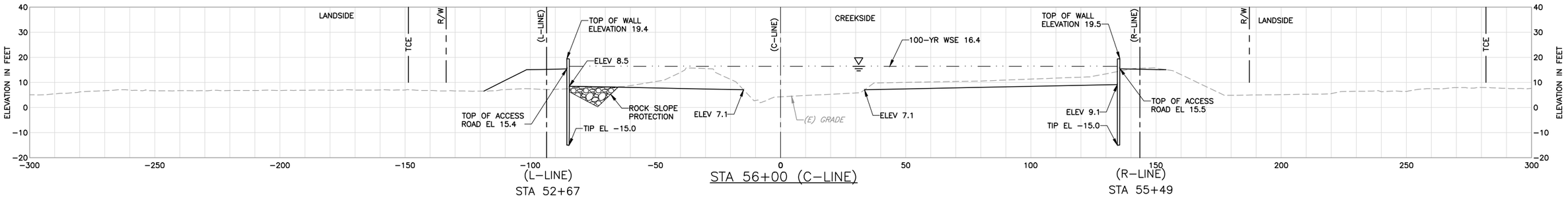

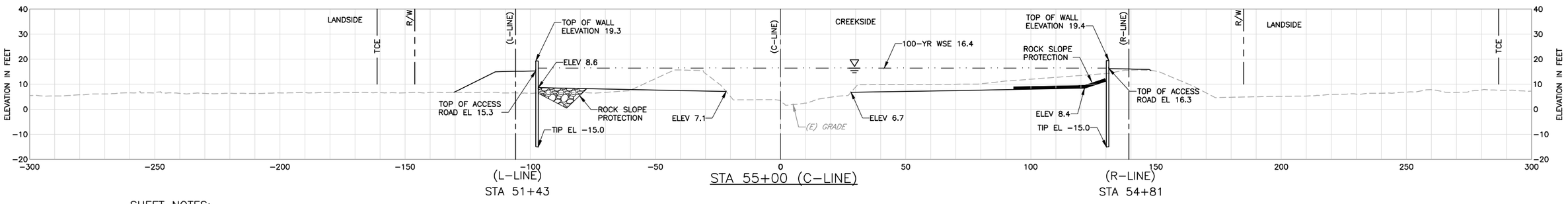

SHEET NOTES:

1 ALL SECTIONS LOOK UP STATION/UPSTREAM.

LEGEND:

EXISTING GRADE

FINISHED GRADE

100-YR WSE

REV	DESCRIPTION	DATE	APPR.

HDR

DATE JULY 2015

DESIGN L. JONES

DRAWN H. SUAREZ

CHECKED P. HRADILEK

ENGINEERING CERTIFICATION

REGISTERED PROFESSIONAL ENGINEER LANCE M. JONES C054744 Exp. 06/30/17 CIVIL STATE OF CALIFORNIA

PROJECT ENGINEER DATE

SAN FRANCISQUITO CREEK JOINT POWERS AUTHORITY

ACCEPTED BY DISTRICT

PROJECT ENGINEER DATE

PROJECT NAME AND SHEET DESCRIPTION:

SAN FRANCISQUITO CREEK FLOOD REDUCTION, ECOSYSTEM RESTORATION, & RECREATION PROJECT

CROSS SECTIONS – (C-LINE)
STA 55+00 TO 58+00

SCALE H:1" = 20' V:1" = 20'

VERIFY SCALES 0 1"

BAR IS ONE INCH ON ORIGINAL DRAWING IF NOT ONE INCH ON THIS SHEET, ADJUST SCALES ACCORDINGLY

PROJECT NUMBER 26284002

SHEET CODE: X-14

SHEET NUMBER: 79 OF 126

DOCUMENT NUMBER: SFC_LP-C-1028-XXXXXXX

USERNAME: BRISHad Tue 08 Jul 2008 09:32am
FILENAME: C:\pwworking\sac\d0171341\X-14

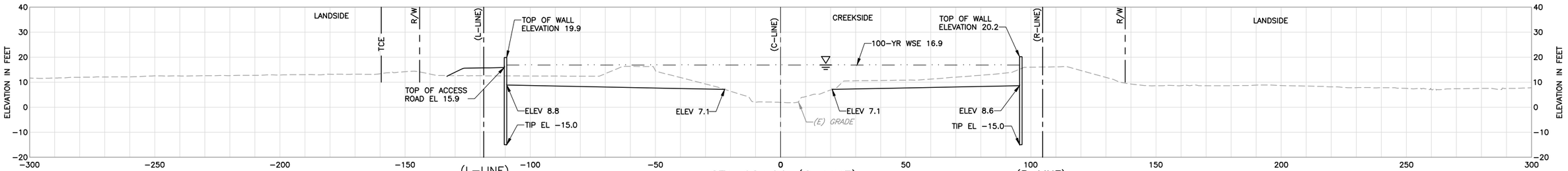

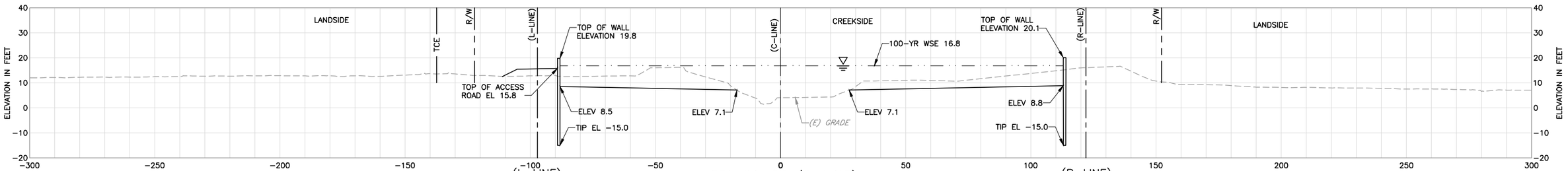

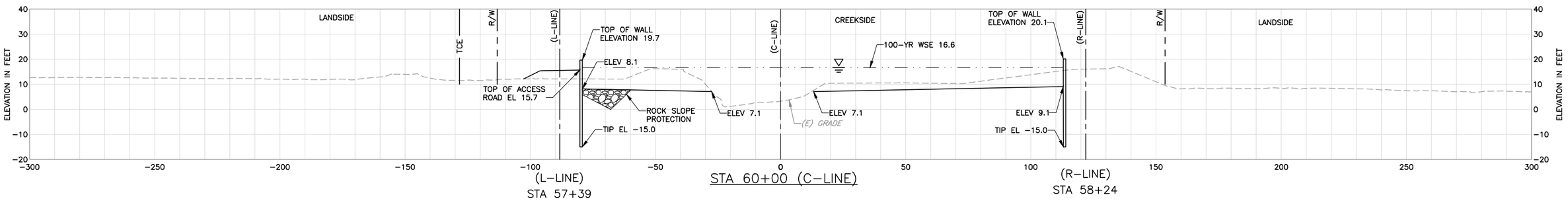

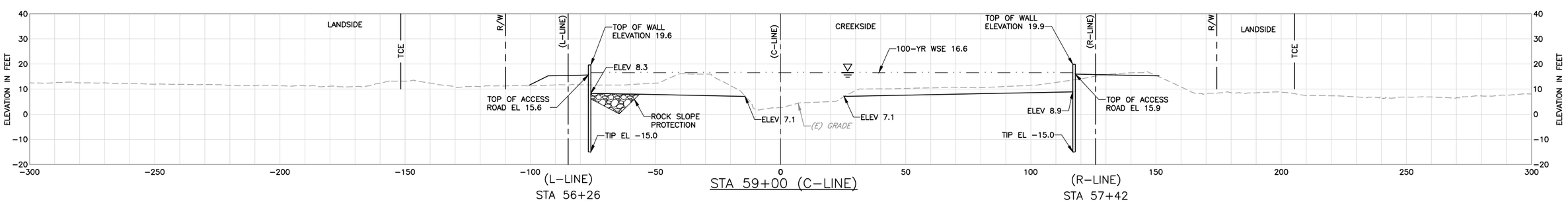

SHEET NOTES:

1 ALL SECTIONS LOOK UP STATION/UPSTREAM.

LEGEND:

EXISTING GRADE

FINISHED GRADE

100-YR WSE

REV	DESCRIPTION	DATE	APPR.

HDR

DATE: JULY 2015
DESIGN: L. JONES
DRAWN: H. SUAREZ
CHECKED: P. HRADILEK

ENGINEERING CERTIFICATION

REGISTERED PROFESSIONAL ENGINEER LANCE M. JONES 08374 EXP. 12/31/17 CIVIL STATE OF CALIFORNIA

PROJECT ENGINEER DATE

SAN FRANCISQUITO CREEK JOINT POWERS AUTHORITY

ACCEPTED BY DISTRICT

PROJECT ENGINEER DATE

PROJECT NAME AND SHEET DESCRIPTION:

SAN FRANCISQUITO CREEK FLOOD REDUCTION, ECOSYSTEM RESTORATION, & RECREATION PROJECT

CROSS SECTIONS – (C-LINE) STA 59+00 TO 62+00

SCALE H:1" = 20' V:1" = 20'

VERIFY SCALES 0 1"

BAR IS ONE INCH ON ORIGINAL DRAWING IF NOT ONE INCH ON THIS SHEET, ADJUST SCALES ACCORDINGLY

PROJECT NUMBER 26284002

SHEET CODE: X-15

SHEET NUMBER: 80 OF 126

DOCUMENT NUMBER: SFC_LP-C-1028-XXXXXXX

USERNAME: BillShad Tue 08 Jul 2008 09:32am
FILENAME: C:\pwworking\sec\d0171341\X-15

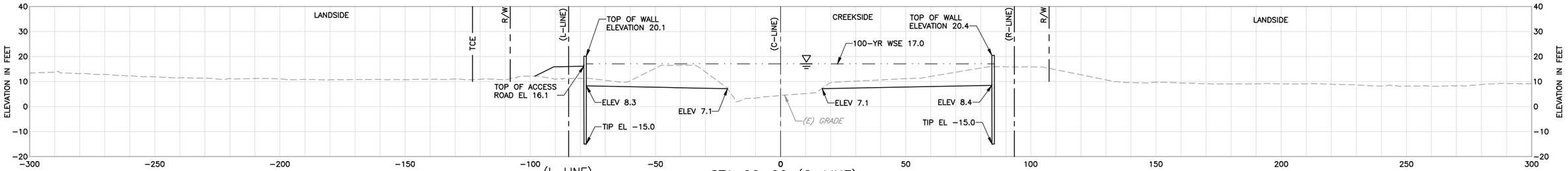

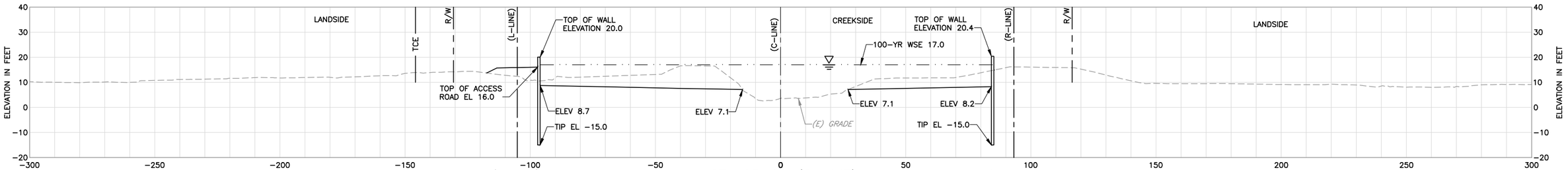

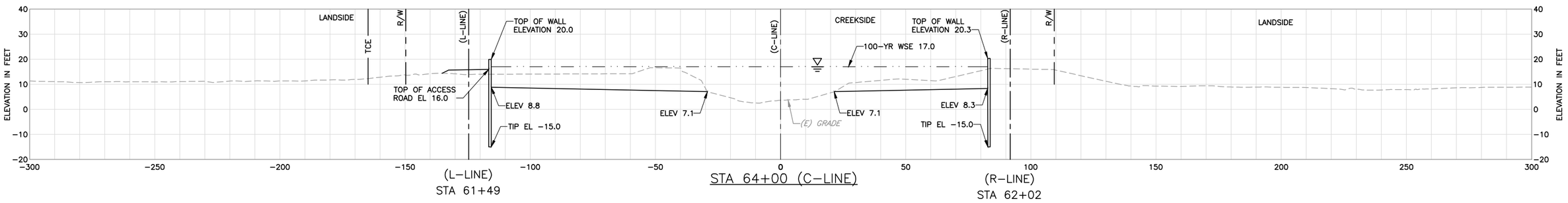

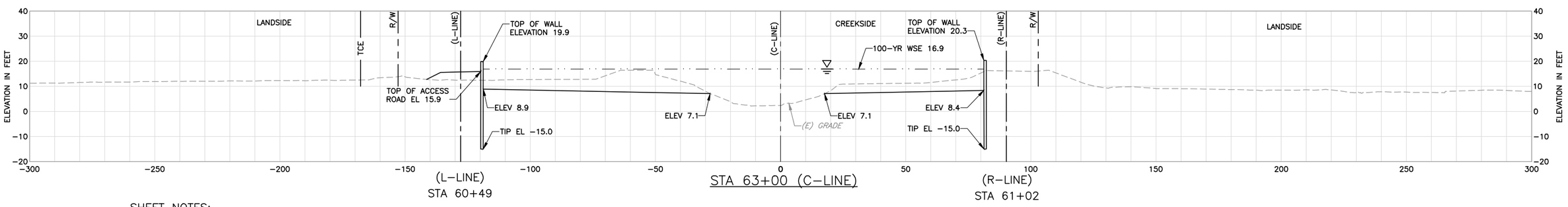

SHEET NOTES:

1 ALL SECTIONS LOOK UP STATION/UPSTREAM.

LEGEND:

EXISTING GRADE

FINISHED GRADE

100-YR WSE

REV	DESCRIPTION	DATE	APPR.

HDR

DATE JULY 2015

DESIGN L. JONES

DRAWN H. SUAREZ

CHECKED P. HRADILEK

ENGINEERING CERTIFICATION

REGISTERED PROFESSIONAL ENGINEER LANCE M. JONES C054744 Exp. 06/30/17 CIVIL STATE OF CALIFORNIA

PROJECT ENGINEER DATE

SAN FRANCISQUITO CREEK JOINT POWERS AUTHORITY

ACCEPTED BY DISTRICT

PROJECT ENGINEER DATE

PROJECT NAME AND SHEET DESCRIPTION:

SAN FRANCISQUITO CREEK FLOOD REDUCTION, ECOSYSTEM RESTORATION, & RECREATION PROJECT

CROSS SECTIONS – (C-LINE) STA 63+00 TO 66+00

SCALE H:1" = 20' V:1" = 20'

VERIFY SCALES 0 1"

BAR IS ONE INCH ON ORIGINAL DRAWING IF NOT ONE INCH ON THIS SHEET, ADJUST SCALES ACCORDINGLY

PROJECT NUMBER 26284002

SHEET CODE: X-16

SHEET NUMBER: 81 OF 126

DOCUMENT NUMBER: SFC_LP-C-1028-XXXXXX

USERNAME: BillShad Tue 08 Jul 2008 09:32am
FILENAME: C:\pwworking\sec\d0171341\X-16

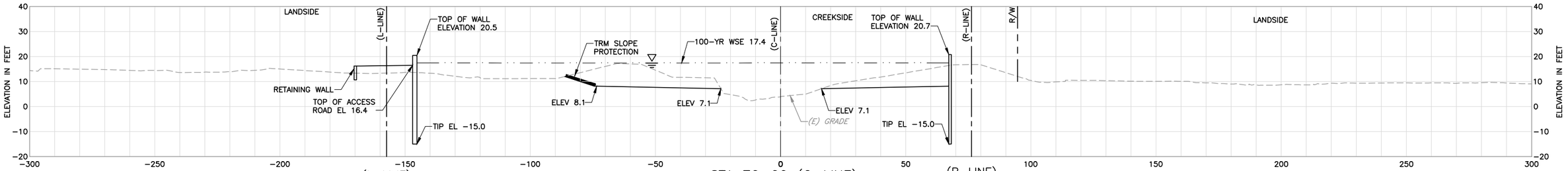

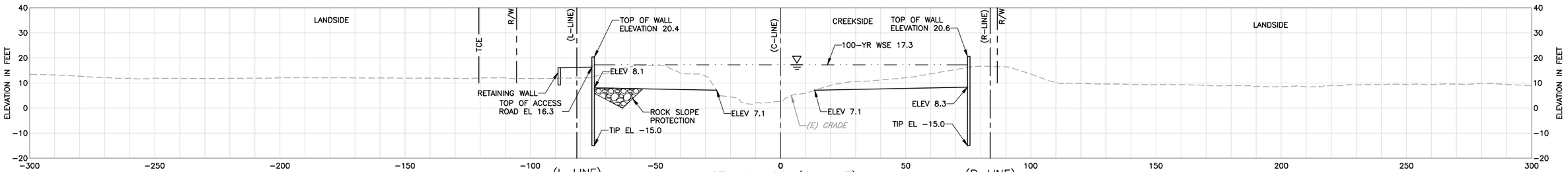

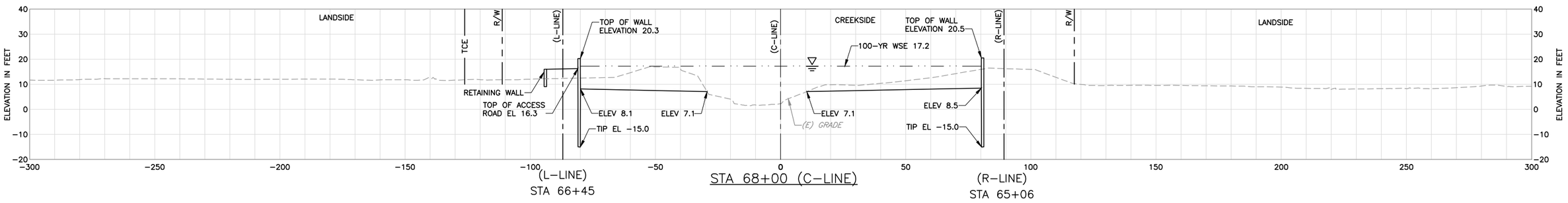

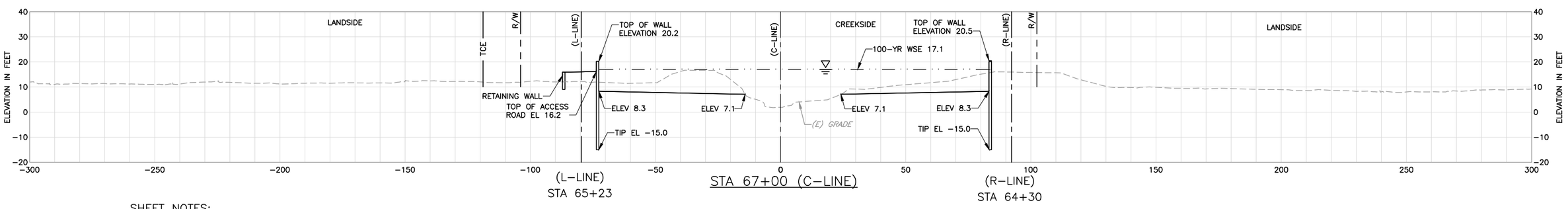

SHEET NOTES:

1 ALL SECTIONS LOOK UP STATION/UPSTREAM.

LEGEND:

EXISTING GRADE

FINISHED GRADE

100-YR WSE

REV	DESCRIPTION	DATE	APPR.

HDR

DATE JULY 2015

DESIGN L. JONES

DRAWN H. SUAREZ

CHECKED P. HRADILEK

ENGINEERING CERTIFICATION

REGISTERED PROFESSIONAL ENGINEER LANCE M. JONES 68574 Exp. 06/17 CIVIL STATE OF CALIFORNIA

PROJECT ENGINEER DATE

SAN FRANCISQUITO CREEK JOINT POWERS AUTHORITY

ACCEPTED BY DISTRICT

PROJECT ENGINEER DATE

PROJECT NAME AND SHEET DESCRIPTION:

SAN FRANCISQUITO CREEK FLOOD REDUCTION, ECOSYSTEM RESTORATION, & RECREATION PROJECT

CROSS SECTIONS – (C-LINE)
STA 67+00 TO 70+00

SCALE H:1" = 20' V:1" = 20'

VERIFY SCALES 0 1"

BAR IS ONE INCH ON ORIGINAL DRAWING IF NOT ONE INCH ON THIS SHEET, ADJUST SCALES ACCORDINGLY

PROJECT NUMBER 26284002

SHEET CODE: X-17

SHEET NUMBER: 82 OF 126

DOCUMENT NUMBER: SFC_LP-C-1028-XXXXXXX

USERNAME: BillShad Tue 08 Jul 2008 09:32am
FILENAME: C:\pwworking\sec\d0171341\X-17

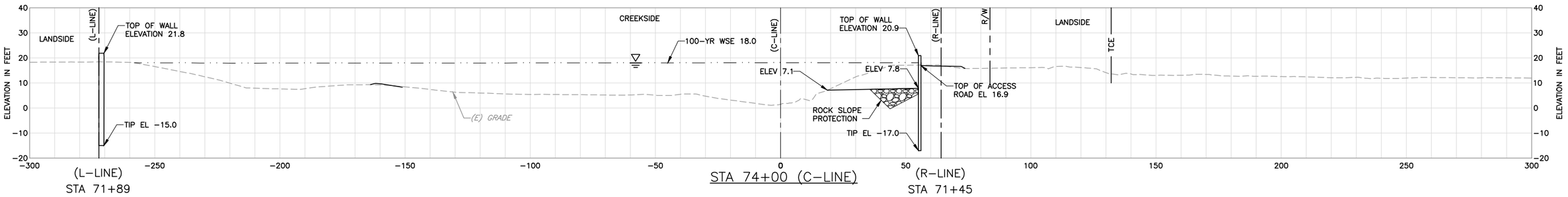

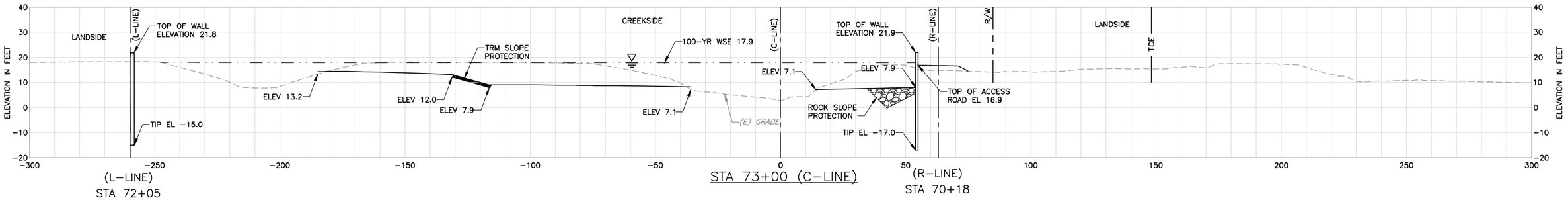

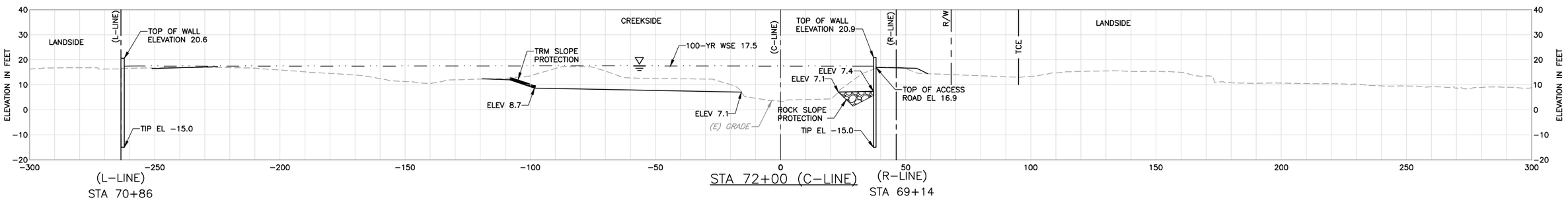

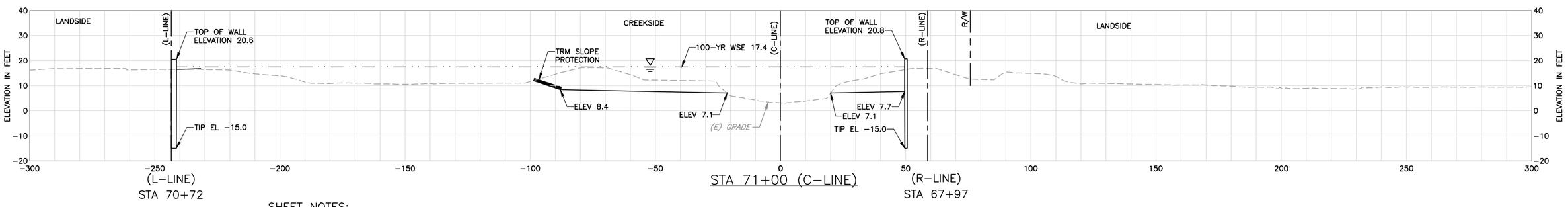

SHEET NOTES:

1 ALL SECTIONS LOOK UP STATION/UPSTREAM.

LEGEND:

EXISTING GRADE

FINISHED GRADE

100-YR WSE

REV	DESCRIPTION	DATE	APPR.

HDR

DATE JULY 2015
DESIGN L. JONES
DRAWN H. SUAREZ
CHECKED P. HRADILEK

ENGINEERING CERTIFICATION
REGISTERED PROFESSIONAL ENGINEER LANCE M. JONES C 68714 Exp. 6/30/17 CIVIL STATE OF CALIFORNIA
PROJECT ENGINEER DATE

SAN FRANCISQUITO CREEK JOINT POWERS AUTHORITY

ACCEPTED BY DISTRICT

PROJECT ENGINEER DATE

PROJECT NAME AND SHEET DESCRIPTION:

SAN FRANCISQUITO CREEK FLOOD REDUCTION, ECOSYSTEM RESTORATION, & RECREATION PROJECT

CROSS SECTIONS – (C-LINE) STA 71+00 TO 74+00

SCALE H:1" = 20' V:1" = 20'

VERIFY SCALES 0 1"

BAR IS ONE INCH ON ORIGINAL DRAWING IF NOT ONE INCH ON THIS SHEET, ADJUST SCALES ACCORDINGLY

PROJECT NUMBER 26284002

SHEET CODE: X-18

SHEET NUMBER: 83 OF 126

DOCUMENT NUMBER: SFC_LP-C-1028-XXXXXXX

USERNAME: BillShad Tue 08 Jul 2008 09:32am
FILENAME: C:\pwworking\sac\d0171341\X-18

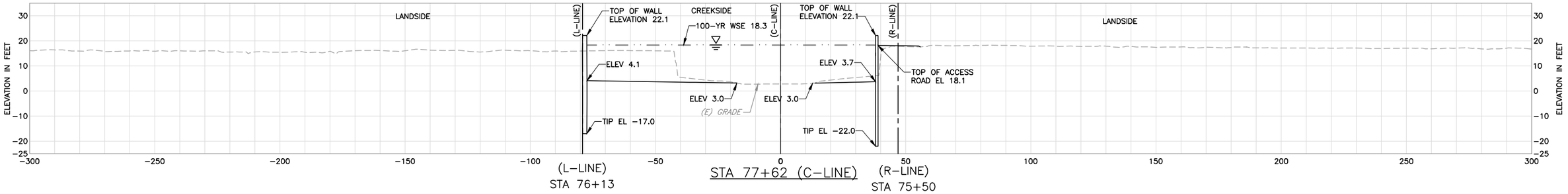

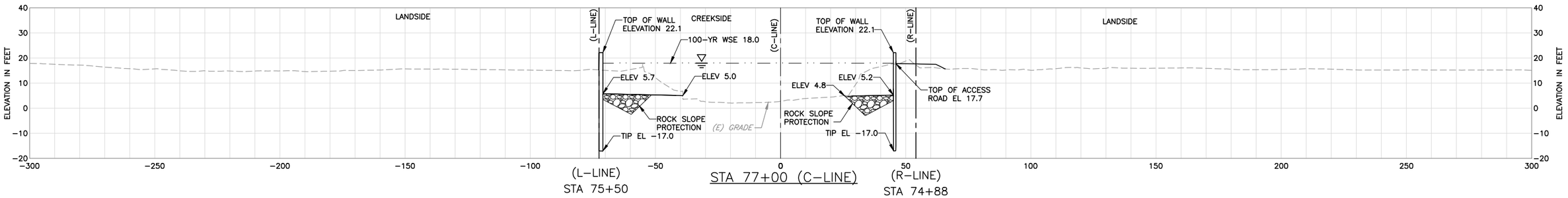

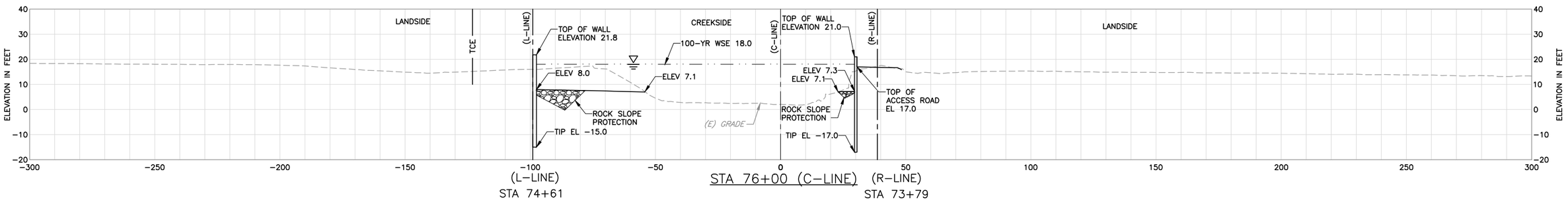

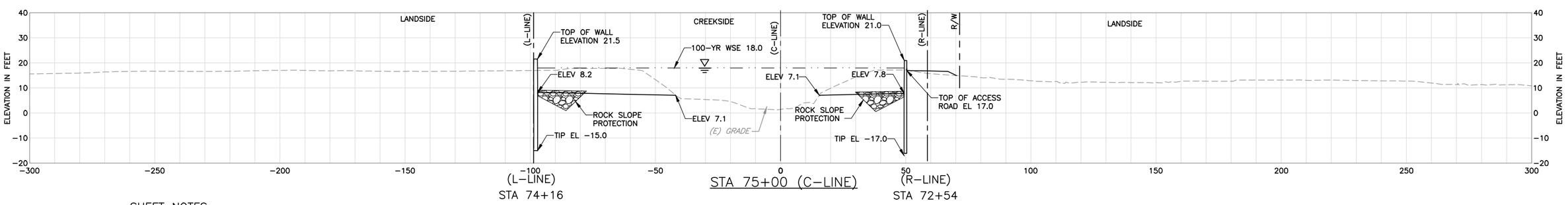

SHEET NOTES:

1 ALL SECTIONS LOOK UP STATION/UPSTREAM.

LEGEND:

EXISTING GRADE

FINISHED GRADE

100-YR WSE

REV	DESCRIPTION	DATE	APPR.

HDR

DATE JULY 2015

DESIGN L. JONES

DRAWN H. SUAREZ

CHECKED P. HRADILEK

ENGINEERING CERTIFICATION

REGISTERED PROFESSIONAL ENGINEER LANCE M. JONES 68374 EXP. 30/17 CIVIL STATE OF CALIFORNIA

PROJECT ENGINEER DATE

SAN FRANCISQUITO CREEK JOINT POWERS AUTHORITY

ACCEPTED BY DISTRICT

PROJECT ENGINEER DATE

PROJECT NAME AND SHEET DESCRIPTION:

SAN FRANCISQUITO CREEK FLOOD REDUCTION, ECOSYSTEM RESTORATION, & RECREATION PROJECT

CROSS SECTIONS – (C-LINE) STA 75+00 TO 77+62

SCALE H:1" = 20' V:1" = 20'

VERIFY SCALES 0 1"

BAR IS ONE INCH ON ORIGINAL DRAWING IF NOT ONE INCH ON THIS SHEET, ADJUST SCALES ACCORDINGLY

PROJECT NUMBER 26284002

SHEET CODE: X-19

SHEET NUMBER: 84 OF 126

DOCUMENT NUMBER: SFC_LP-C-1028-XXXXXXX

USERNAME: BillShad Tue 08 Jul 2008 09:32am
FILENAME: C:\pwworking\sec\d0171341\X-19

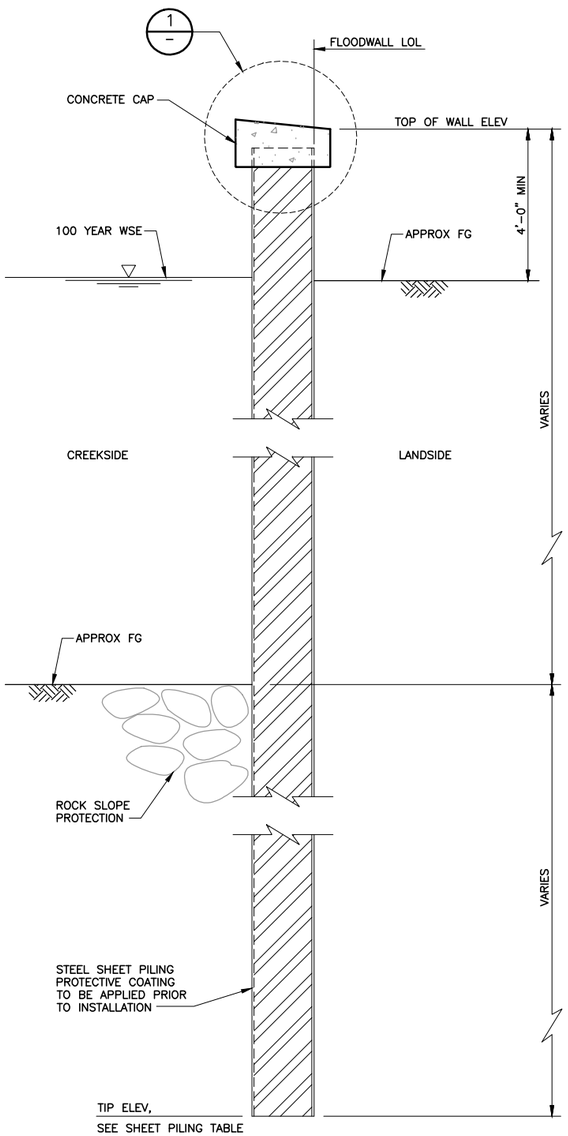

TYPICAL SHEET PILE FLOODWALL SECTION

SCALE: 1/2"=1'-0"

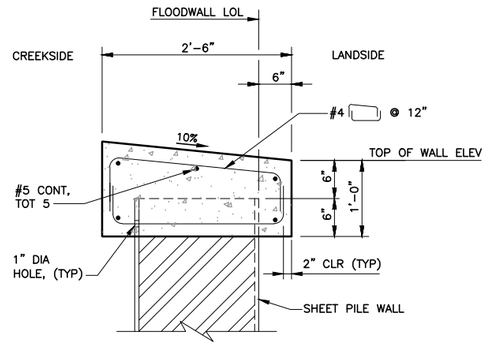

DETAIL 1 — TYPICAL CONCRETE CAP

SCALE: 1" = 1'-0"

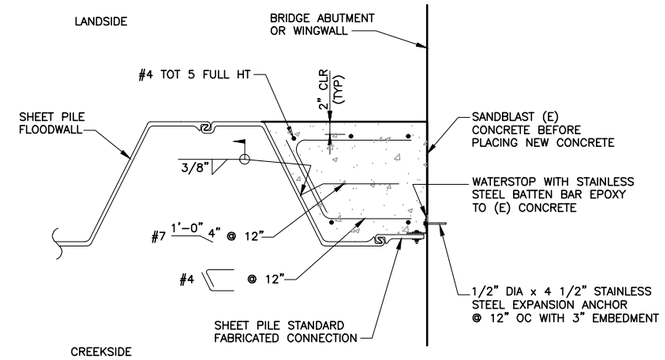

DETAIL 2 — END SHEET PILE FLOODWALL AT CALTRANS BRIDGE

SCALE: 1" = 1'-0"

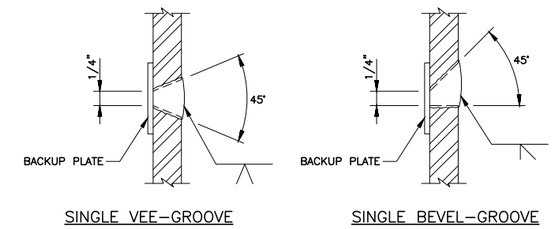

DETAIL 3 — SHEET PILE WELDING SPLICE – BUTT JOINTS

NO SCALE

NOTES:

1. SINGLE VEE-GROOVE PERMITTED FOR ALL POSITIONS.
2. SINGLE BEVEL-GROOVE PERMITTED FOR HORIZONTAL JOINTS ONLY.
3. STAGGER SPLICE 5'-0" MIN FROM ADJACENT SHEET PILE JOINT.

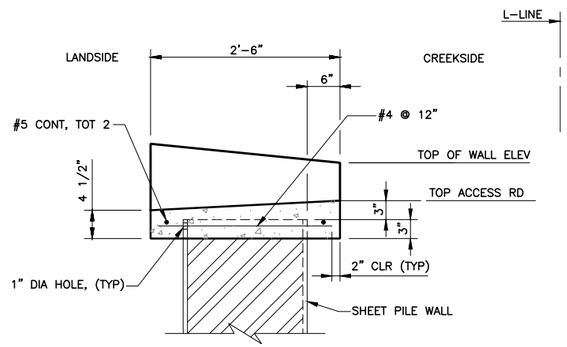

SECTION A — THRU SCUPPER – STA 66+00 AND 69+01

SCALE: 1" = 1'-0"

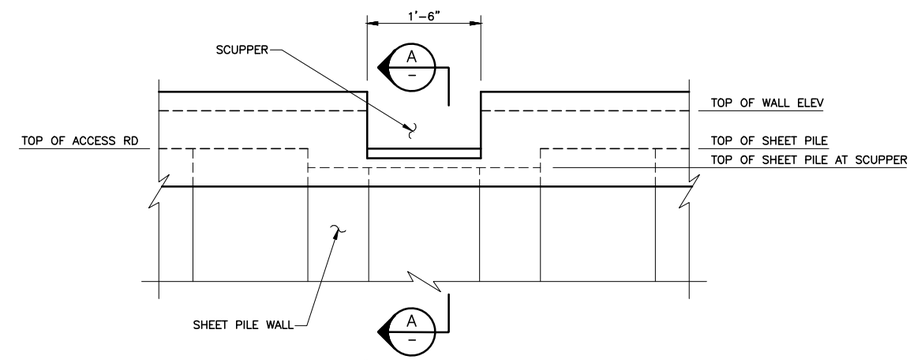

DETAIL 4 — SCUPPER ELEVATION

SCALE: 1" = 1'-0"

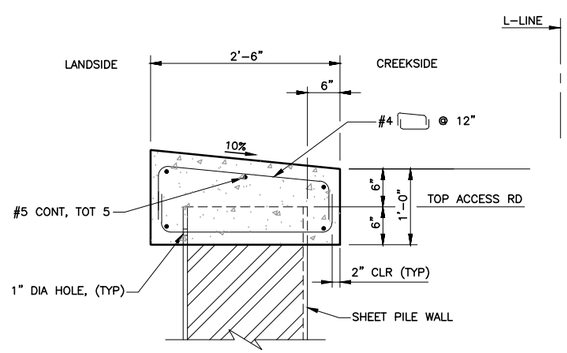

DETAIL 5 — RETAINING WALL CAP

SCALE: 1" = 1'-0"

GENERAL NOTES:

DESIGN: U.S. ARMY CORPS OF ENGINEERS
ENGINEER MANUAL-1110-2-2504, "DESIGN OF SHEET PILE WALLS"

REINFORCED CONCRETE: fy = 60,000 PSI
f'c = 4,000 PSI
n = 9

1. SHEET PILING DESIGNED USING THE SOIL PARAMETERS BASED ON "GEOTECHNICAL EVALUATION REPORT, SAN FRANCISQUITO CREEK FLOOD PROTECTION PROJECT" BY GEI CONSULTANTS DATED DECEMBER 2011.
2. CONTRACTOR SHALL BE RESPONSIBLE FOR DETERMINING THE ADEQUACY OF THE WALLS WITH RESPECT TO LOADS OTHER THAN THOSE LISTED HEREIN AND THAT ARE APPLIED TO THE WALLS AS A RESULT OF THE CONSTRUCTION PROCEDURES AND OPERATIONS.
3. CONCRETE SURFACE FINISH: A CLASS 1 SURFACE FINISH IS REQUIRED FOR ALL EXPOSED SURFACES.
4. SHOP DRAWINGS: CONTRACTOR SHALL SUBMIT FOR REVIEW SHOP DRAWINGS SHOWING THE PROPOSED SHEET PILING SYSTEM AND DETAILS. THE PROPOSED SHEET PILING SYSTEM SHALL MEET THE MINIMUM SECTION PROPERTY REQUIREMENTS. SHOP DRAWINGS SHALL BE SIGNED AND SEALED BY A PROFESSIONAL ENGINEER REGISTERED IN THE STATE OF CALIFORNIA.
5. ALL REINFORCING STEEL SHALL BE EPOXY COATED.

SHEET PILING TABLE

	STATION	WALL SECTION	TIP ELEVATION
R-LINE FLOODWALL	28+03.00 TO 33+07.00	AZ 24-700	-15.0
	52+50.00 TO 61+00.00	AZ 19-700	-15.0
	61+00.00 TO 70+00.00	AZ 24-700	-15.0
	70+00.00 TO 75+00.00	AZ 36-700	-17.0
	75+00.00 TO 75+54.13	AZ 50	-22.0
L-LINE FLOODWALL	47+50.00 TO 62+00.00	AZ 19-700	-15.0
	62+00.00 TO 71+05.00	AZ 24-700	-15.0
	71+80.00 TO 75+00.00	AZ 24-700	-15.0
	75+00.00 TO 76+23.00	AZ 36-700	-17.0
L-LINE RETAINING WALL	64+00.00 TO 69+95.00	AZ 19-700	-3.0

1. FOR TOP OF WALL ELEVATIONS, SEE PLAN & PROFILE SHEETS ON "CIVIL PLANS".
2. USE WALL SECTION SHOWN OR APPROVED EQUAL.

REV	DESCRIPTION	DATE	APPR.

HDR

DATE: JULY 2015
DESIGN: SP
DRAWN: JV
CHECKED: JM

ENGINEERING CERTIFICATION
REGISTERED PROFESSIONAL ENGINEER — KEITH F. DE LAP — No. 48214 — Exp. 6-30-16 — CIVIL — STATE OF CALIFORNIA
PROJECT ENGINEER DATE

SAN FRANCISQUITO CREEK JOINT POWERS AUTHORITY
ACCEPTED BY DISTRICT
PROJECT ENGINEER DATE

PROJECT NAME AND SHEET DESCRIPTION:
SAN FRANCISQUITO CREEK FLOOD REDUCTION, ECOSYSTEM RESTORATION, & RECREATION PROJECT
SAN FRANCISQUITO CREEK FLOODWALL SHEET PILE DETAILS NO. 1

SCALE: AS SHOWN
VERIFY SCALES: 0 — 1"
BAR IS ONE INCH ON ORIGINAL DRAWING IF NOT ONE INCH ON THIS SHEET, ADJUST SCALES ACCORDINGLY

PROJECT NUMBER: 26284002
SHEET CODE: S-1
SHEET NUMBER: 85 OF 126

DOCUMENT NUMBER: CAD_GD-C-3011-XXXXXX

USERNAME: BillShad Tue 08 Jul 2008 09:32am
FILENAME: C:\Users\hsuarez\appdata\local\temp\AcPublish_7240\S-01 SFCJPA-RW

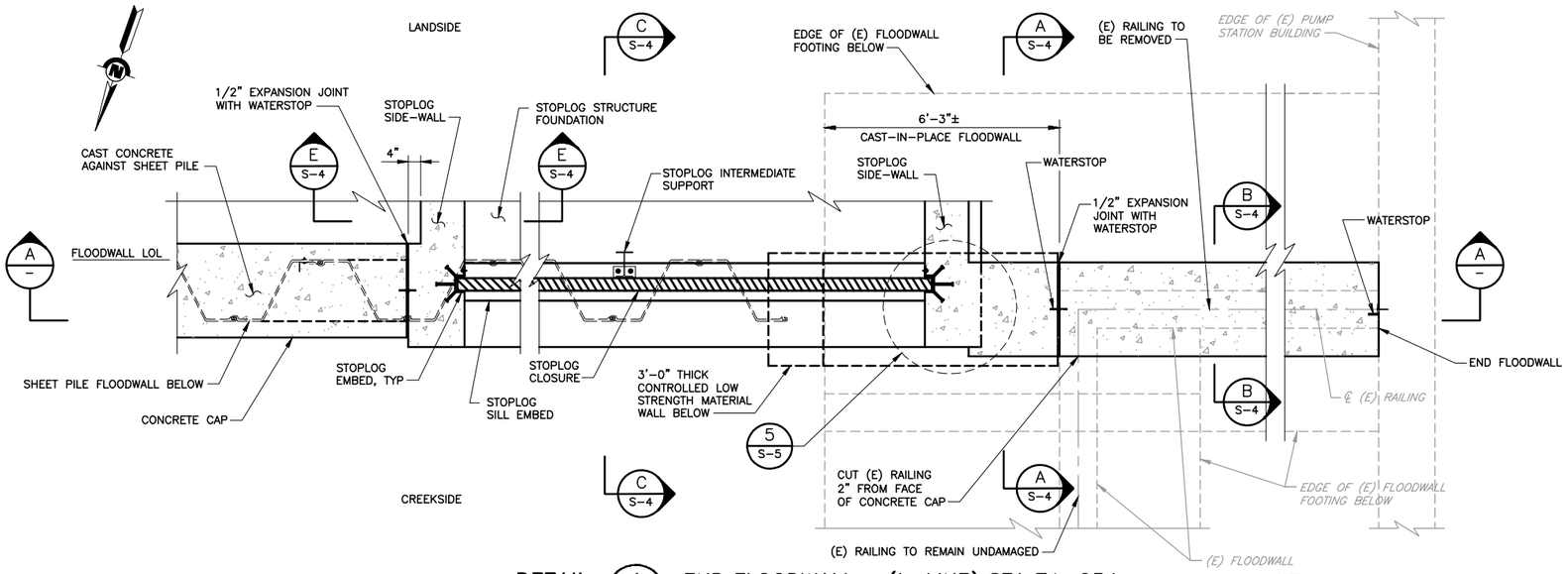

DETAIL 1 (C-21) END FLOODWALL – (L-LINE) STA 71+05±

SCALE: 1/2" = 1'-0"

NOTE:
1. SHEET PILING WITHIN 20 FEET OF THE EXISTING PUMP STATION BUILDING SHALL BE INSTALLED BY USING SHEET PRESSING METHOD.

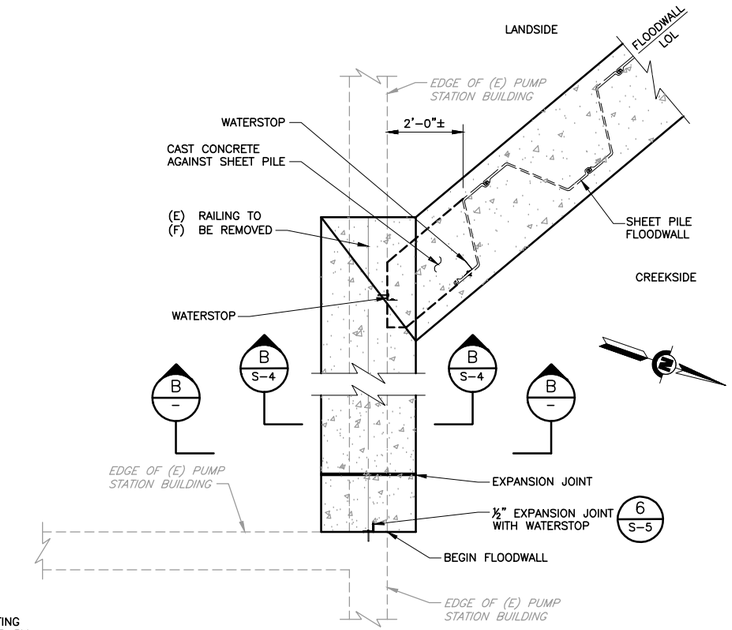

DETAIL 2 (C-21) BEGIN FLOODWALL – (L-LINE) STA 71+57±

SCALE: 1/2" = 1'-0"

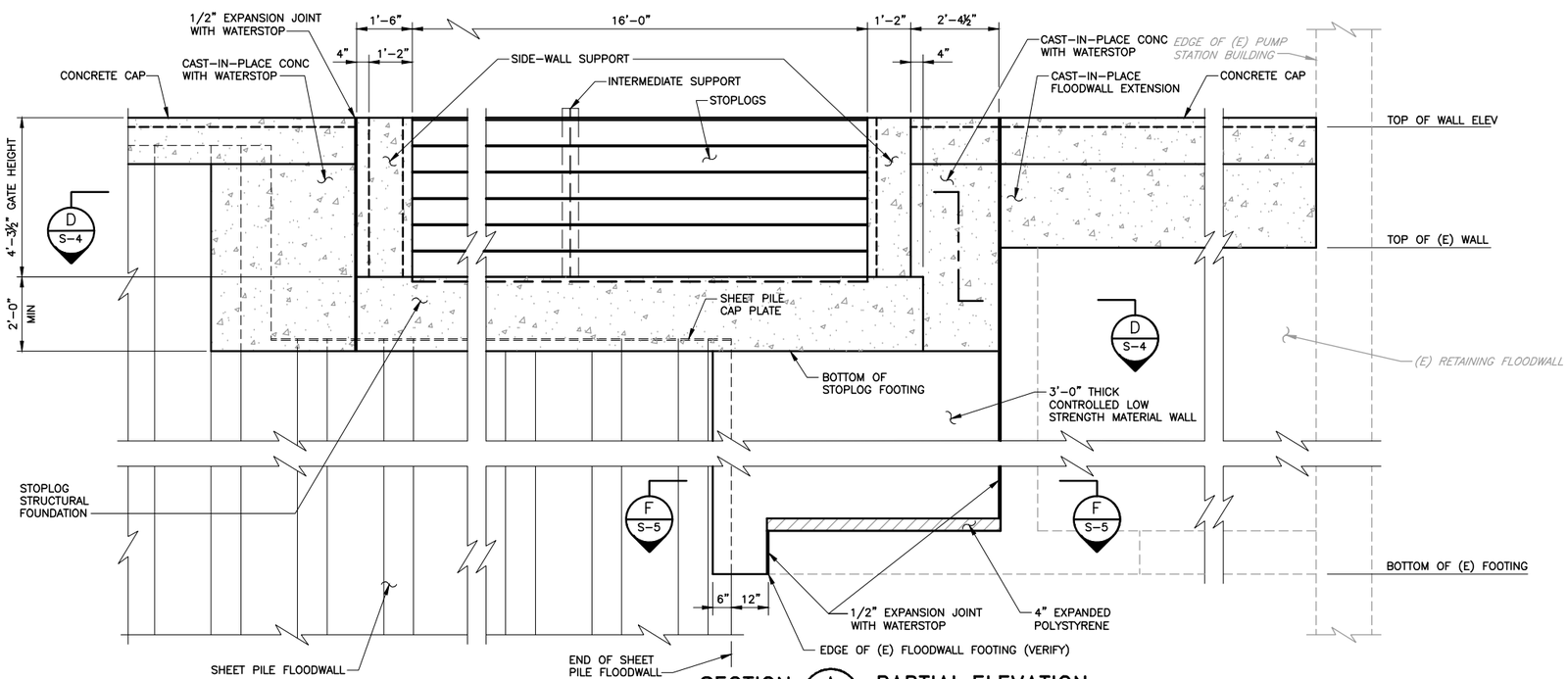

SECTION A (–) PARTIAL ELEVATION

SCALE: 1/2" = 1'-0"

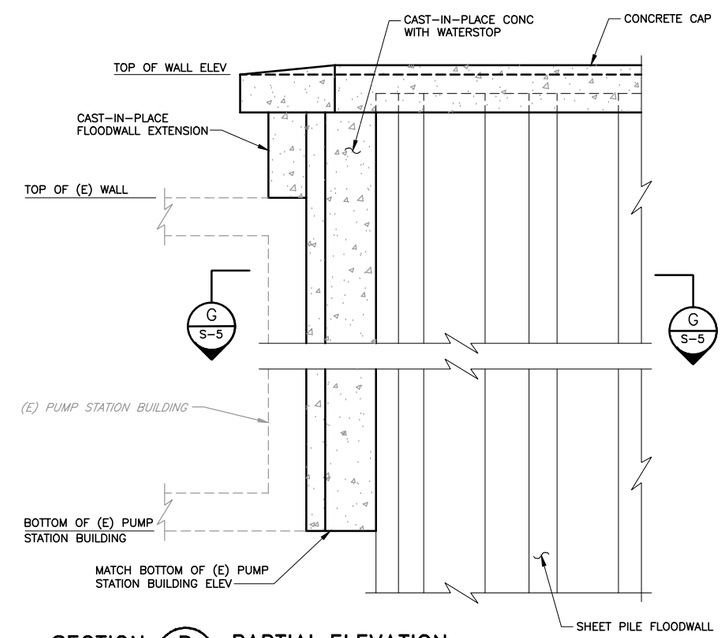

SECTION B (–) PARTIAL ELEVATION

SCALE: 1/2" = 1'-0"

REV	DESCRIPTION	DATE	APPR.

HDR

DATE	JULY 2015
DESIGN	SP
DRAWN	JV
CHECKED	JM

ENGINEERING CERTIFICATION

REGISTERED PROFESSIONAL ENGINEER KEITH F. DE WITT No. 48214 Exp. 6-30-16 CIVIL STATE OF CALIFORNIA

PROJECT ENGINEER DATE

SAN FRANCISQUITO CREEK JOINT POWERS AUTHORITY

ACCEPTED BY DISTRICT

PROJECT ENGINEER DATE

PROJECT NAME AND SHEET DESCRIPTION:

SAN FRANCISQUITO CREEK FLOOD REDUCTION, ECOSYSTEM RESTORATION, & RECREATION PROJECT

SAN FRANCISQUITO CREEK FLOODWALL
SHEET PILE DETAILS NO. 2

SCALE	PROJECT NUMBER
AS SHOWN	26284002
VERIFY SCALES 0 1" BAR IS ONE INCH ON ORIGINAL DRAWING IF NOT ONE INCH ON THIS SHEET, ADJUST SCALES ACCORDINGLY	SHEET CODE: S-2
	SHEET NUMBER: 86 OF 126

DOCUMENT NUMBER: CAD_GD-C-3011-XXXXXX

USERNAME: BillShad Tue 08 Jul 2008 09:32am
FILENAME: C:\pwworking\sac\d0171341\S-02 SFCJPA-RW

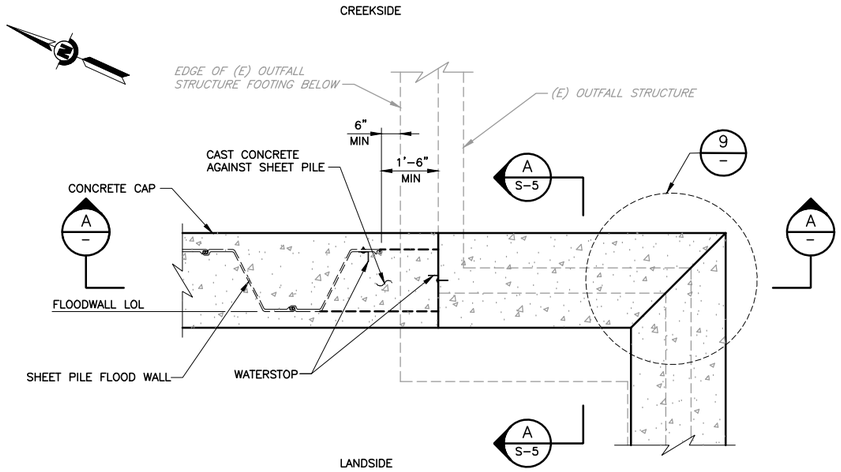

DETAIL 3 / C-4 PARTIAL PLAN – (R-LINE) STA 29+98.16

SCALE: 1/2" = 1'-0"

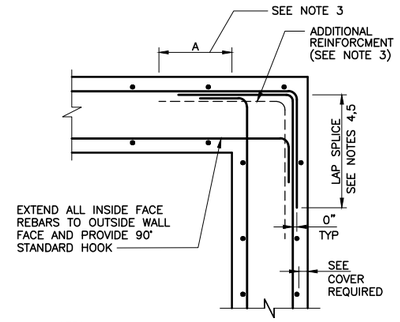

NOTES:

1. SEE INDIVIDUAL STRUCTURE SHEETS FOR EXTRA HORIZONTAL REBARS AT CORNERS AND WALL INTERSECTIONS.
2. LONG STRAIGHT BARS WITH LAP SPLICES BENT BARS AT ENDS MAY BE SUBSTITUTED FOR LONG BARS WITH END HOOKS.
3. ADDITIONAL CORNER BARS REQUIRED ONLY AS SPECIFIED ON DESIGN DRAWINGS, AND TO BE STAGGERED. FULL WALL HEIGHT, WITH HORIZONTAL WALL REINFORCING. A=1/5 THE CLEAR SPAN DISTANCE MEASURED HORIZONTALLY BETWEEN WALLS, BUT IN NO CASE LESS THAN THE REQUIRED LENGTH OF LAPPED SPLICES FOR TOP BARS (UNLESS AT A PENETRATION).
4. REINFORCING BENDS PER CONCRETE REINFORCING STEEL INSTITUTE STANDARDS.
5. LAP SPLICES AND HOOK LENGTHS PER AMERICAN CONCRETE INSTITUTE 318.

DETAIL 9 / – HORIZONTAL REINFORCEMENT AT CORNER OF WALL OR CAP

NTS

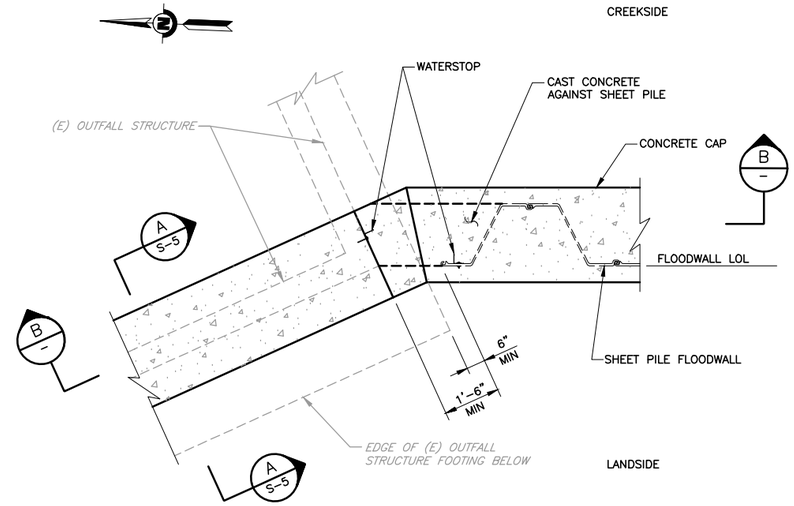

DETAIL 4 / C-4 PARTIAL PLAN – (R-LINE) STA 30+39.24

SCALE: 1/2" = 1'-0"

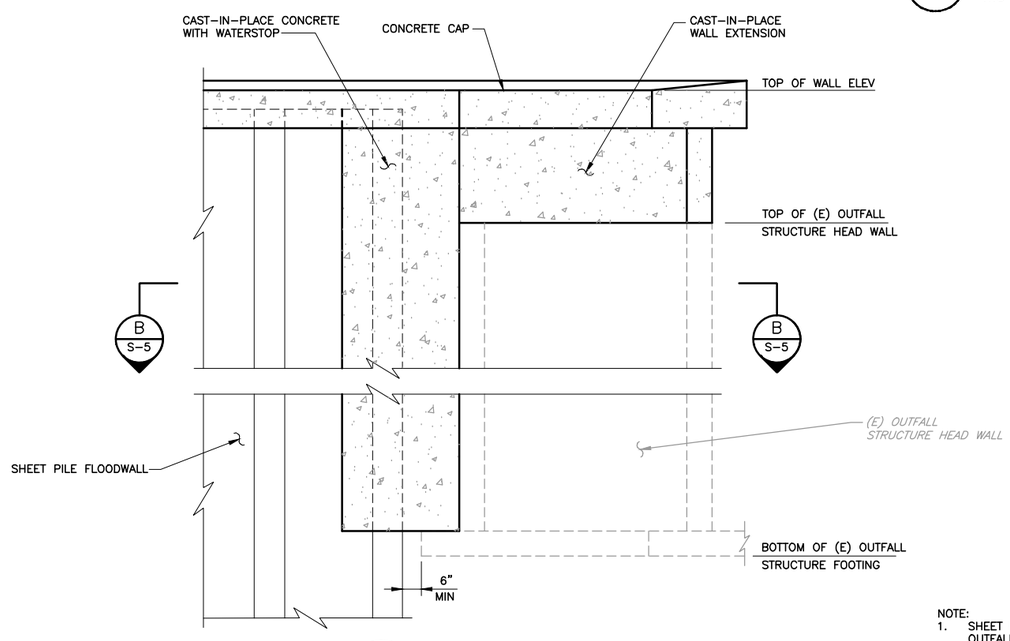

SECTION A / – PARTIAL ELEVATION

SCALE: 1/2" = 1'-0"

NOTE:
1. SHEET PILING WITHIN 20 FEET OF THE EXISTING OUTFALL STRUCTURE AND PEDESTRIAN BRIDGE WINGWALL SHALL BE INSTALLED BY USING SHEET PRESSING METHOD.

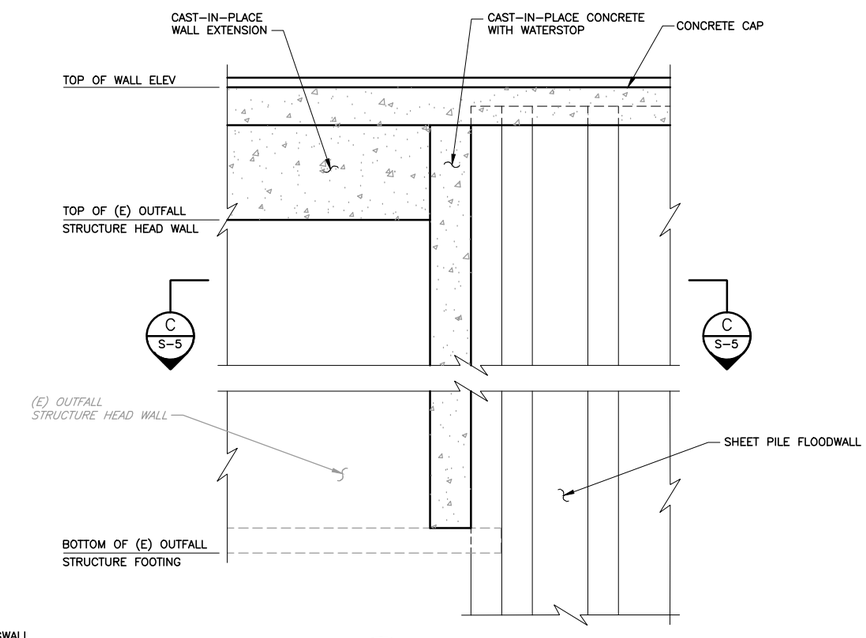

SECTION B / – PARTIAL ELEVATION

SCALE: 1/2" = 1'-0"

REV	DESCRIPTION	DATE	APPR.

HDR

DATE	ENGINEERING CERTIFICATION
JULY 2015	REGISTERED PROFESSIONAL ENGINEER KEITH F. DE LEON No. 48214 Exp. 6-30-16 CIVIL STATE OF CALIFORNIA
DESIGN SP	
DRAWN JV	
CHECKED JM	PROJECT ENGINEER DATE

SAN FRANCISQUITO CREEK JOINT POWERS AUTHORITY

ACCEPTED BY DISTRICT

PROJECT ENGINEER DATE

PROJECT NAME AND SHEET DESCRIPTION:

SAN FRANCISQUITO CREEK FLOOD REDUCTION, ECOSYSTEM RESTORATION, & RECREATION PROJECT

SAN FRANCISQUITO CREEK FLOODWALL SHEET PILE DETAILS NO. 3

SCALE	PROJECT NUMBER
AS SHOWN	26284002
VERIFY SCALES 0 1" BAR IS ONE INCH ON ORIGINAL DRAWING IF NOT ONE INCH ON THIS SHEET, ADJUST SCALES ACCORDINGLY	SHEET CODE: S-3
	SHEET NUMBER: 87 OF 126

DOCUMENT NUMBER: CAD_GD-C-3011-XXXXXX

USERNAME: BillShad Tue 08 Jul 2008 09:32am
FILENAME: C:\pwworking\sac\d0171341\S-03 SFCJPA-RW

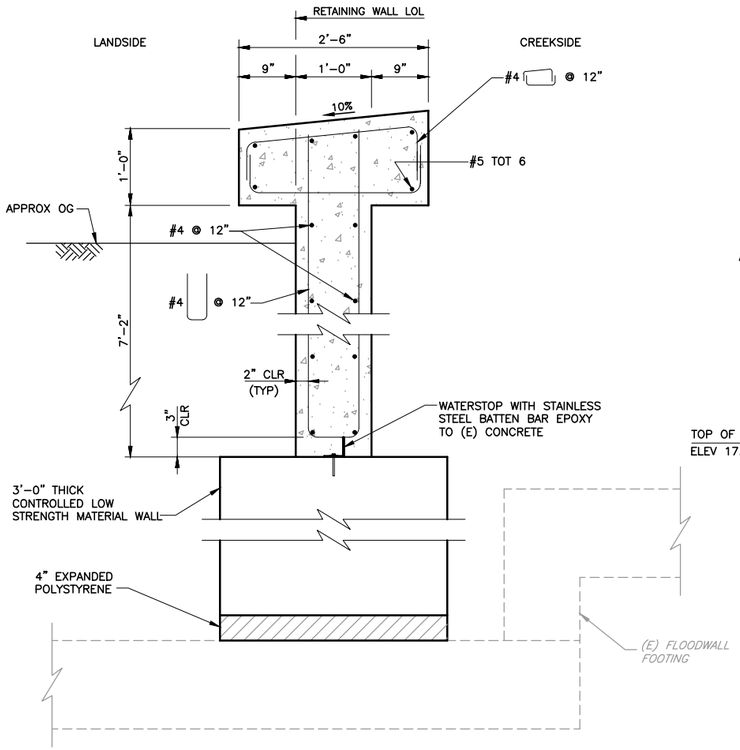

SECTION A (S-2) CAST-IN-PLACE FLOODWALL

SCALE: 1" = 1'-0"

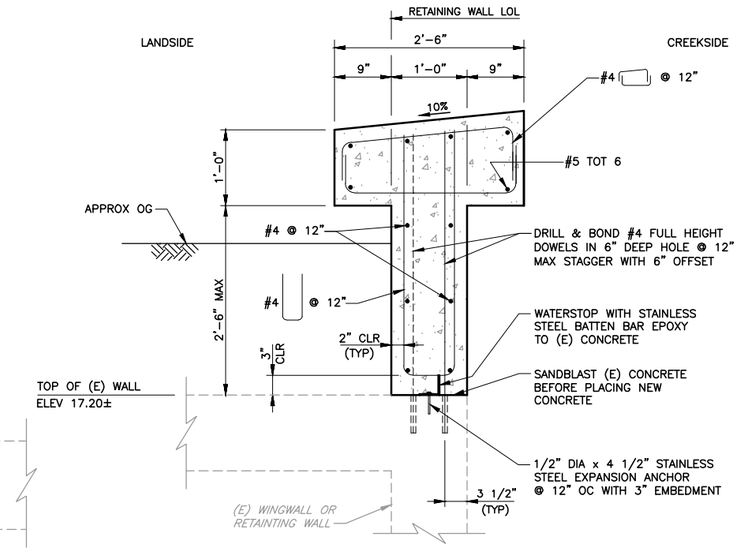

SECTION B (S-2) FLOODWALL EXTENSION

SCALE: 1" = 1'-0"

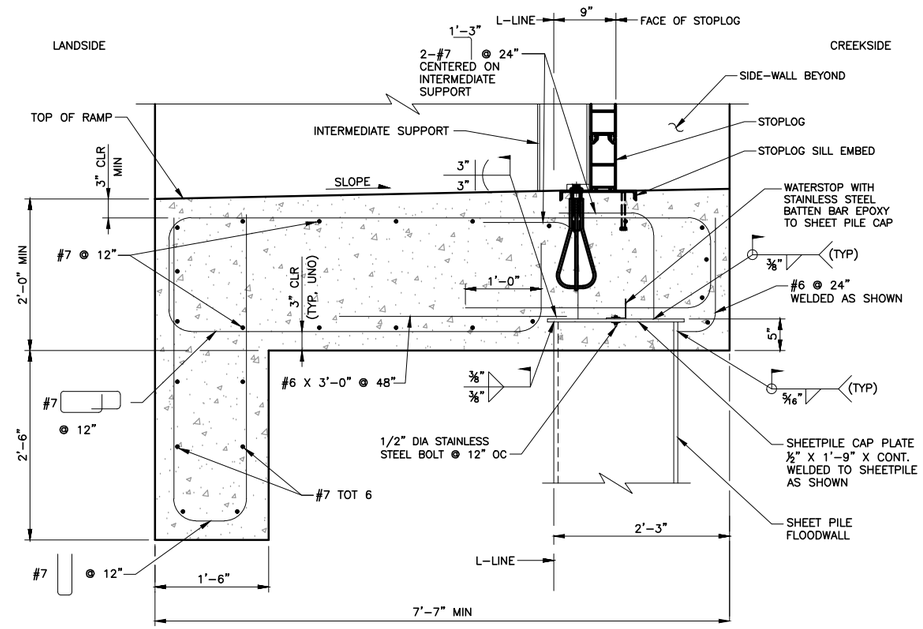

SECTION C (S-2) STOPLOG CLOSURE FOUNDATION

SCALE: 1" = 1'-0"

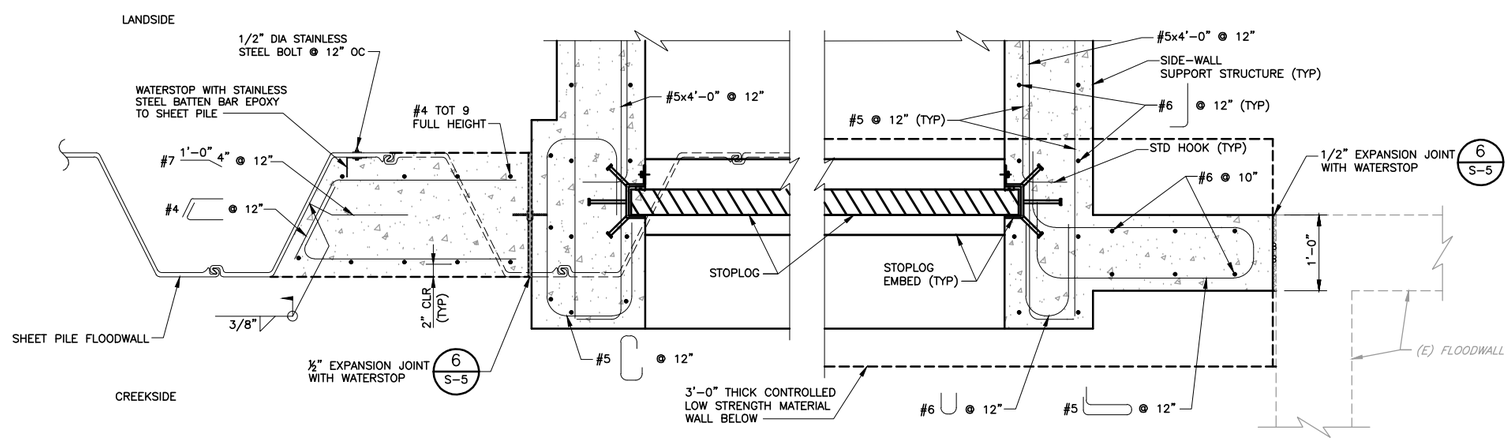

SECTION D (S-2) CAST-IN-PLACE FLOODWALL AT VEHICULAR STOPLOG GATE

SCALE: 1" = 1'-0"

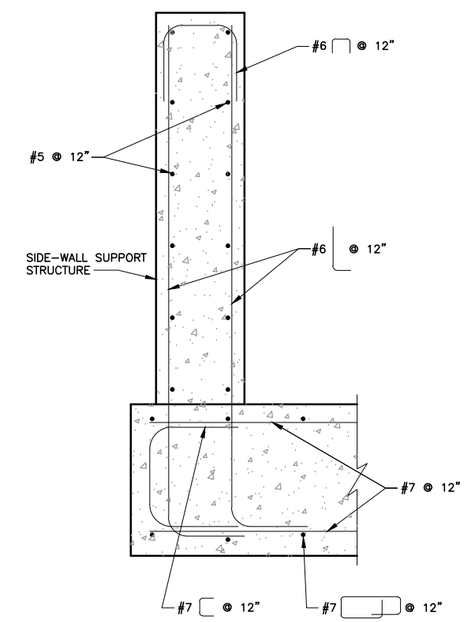

SECTION E (S-2) STOPLOG SIDE-WALL

SCALE: 1" = 1'-0"

REV	DESCRIPTION	DATE	APPR.

HDR

DATE	ENGINEERING CERTIFICATION
JULY 2015	REGISTERED PROFESSIONAL ENGINEER KEITH F. DE MARTINI No. 48214 Exp. 6-30-16 CIVIL STATE OF CALIFORNIA
DESIGN SP	
DRAWN JV	
CHECKED JM	PROJECT ENGINEER DATE

SAN FRANCISQUITO CREEK JOINT POWERS AUTHORITY

ACCEPTED BY DISTRICT

PROJECT ENGINEER DATE

PROJECT NAME AND SHEET DESCRIPTION:

SAN FRANCISQUITO CREEK FLOOD REDUCTION, ECOSYSTEM RESTORATION, & RECREATION PROJECT

SAN FRANCISQUITO CREEK FLOODWALL
SHEET PILE DETAILS NO. 4

SCALE	PROJECT NUMBER
AS SHOWN	26284002
VERIFY SCALES 0 1" BAR IS ONE INCH ON ORIGINAL DRAWING IF NOT ONE INCH ON THIS SHEET, ADJUST SCALES ACCORDINGLY	SHEET CODE: S-4
	SHEET NUMBER: 88 OF 126

DOCUMENT NUMBER: CAD_GD-C-3011-XXXXXX

USERNAME: BillShad Tue 08 Jul 2008 09:32am
FILENAME: C:\pwworking\sac\d0171341\S-04 SFCJPA-RW

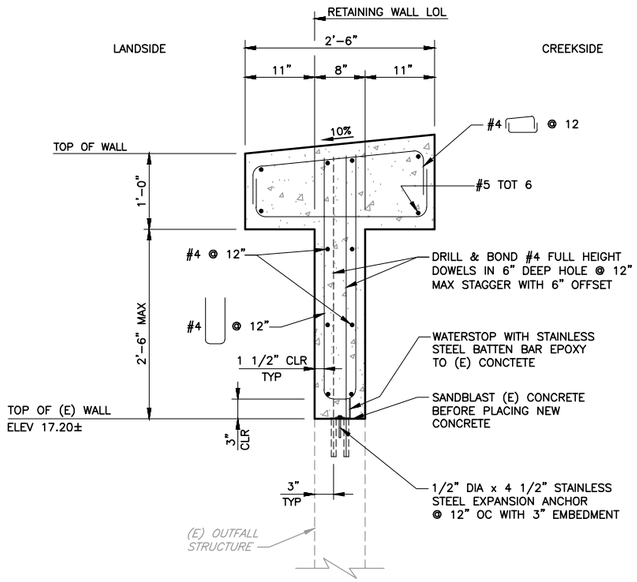

SECTION A / S-3 WALL EXTENSION

SCALE: 1" = 1'-0"

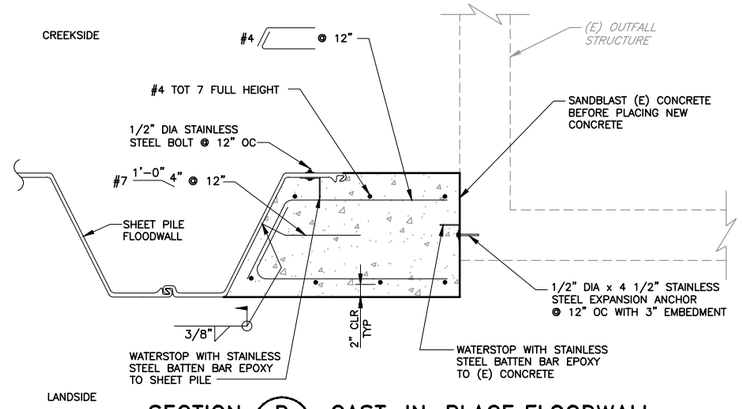

SECTION B / S-3 CAST-IN-PLACE FLOODWALL

SCALE: 1" = 1'-0"

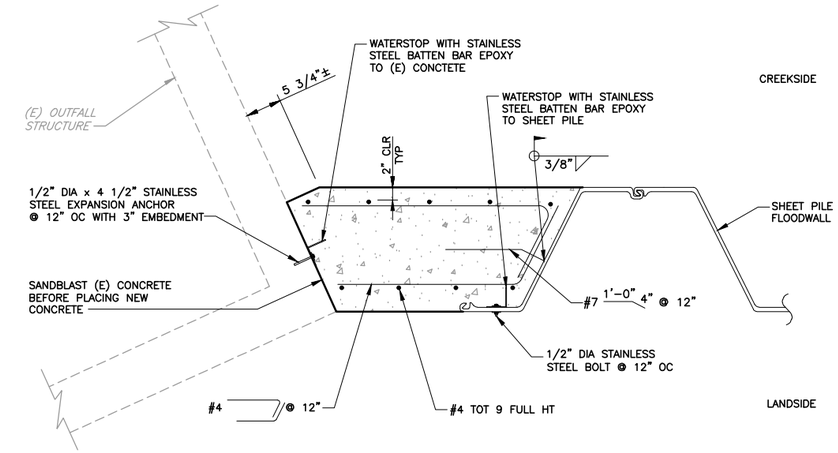

SECTION C / S-3 CAST-IN-PLACE FLOODWALL

SCALE: 1" = 1'-0"

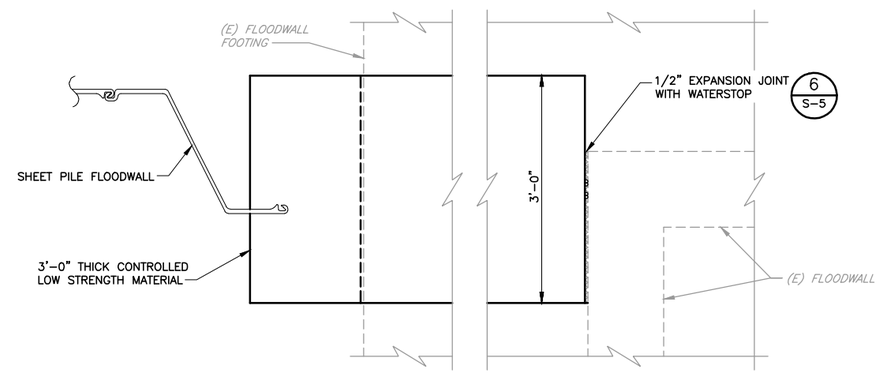

SECTION F / S-2 THRU CONTROLLED LOW STRENGTH MATERIAL WALL

SCALE: 1" = 1'-0"

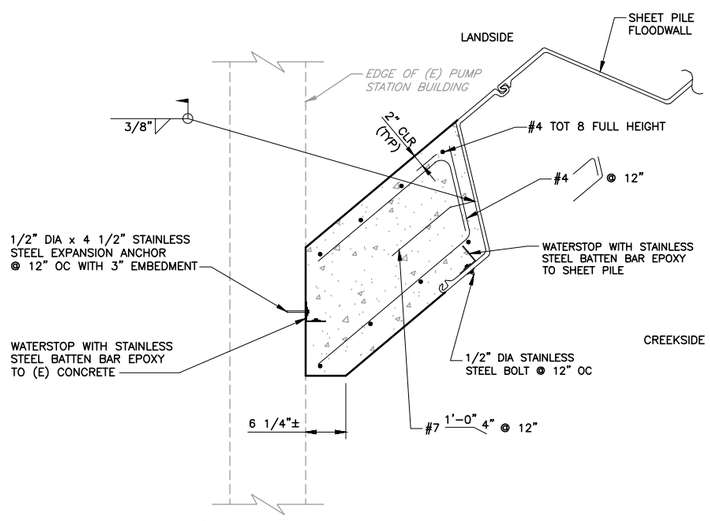

NOTE:
1. CHIP AWAY WALL TEXTURE TO CREATE A UNIFORM ROUGHENED SURFACE TO CAST CONCRETE AGAINST.

SECTION G / S-2 CAST-IN-PLACE FLOODWALL

SCALE: 1" = 1'-0"

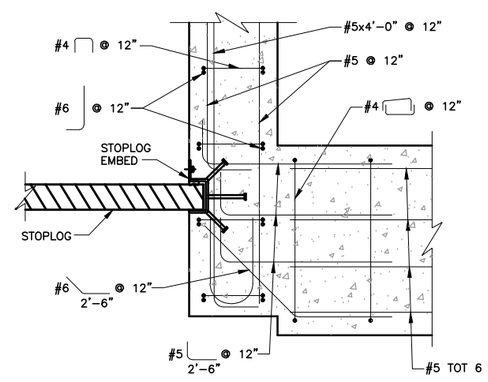

DETAIL 5 / S-2 CONCRETE CAP CONNECTION

SCALE: 1/2" = 1'-0"

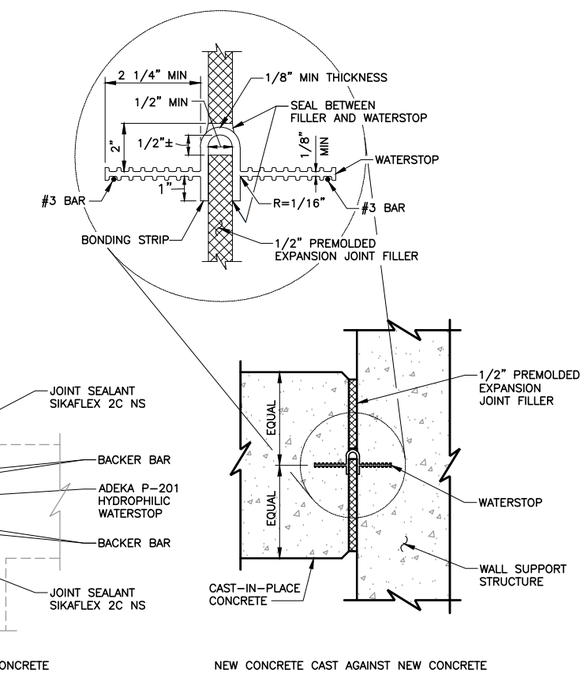

DETAIL 6 / S-4 EXPANSION JOINT DETAILS

SCALE: 1/2" = 1'-0"

REV	DESCRIPTION	DATE	APPR.

HDR

DATE	JULY 2015
DESIGN	SP
DRAWN	JV
CHECKED	JM

ENGINEERING CERTIFICATION

REGISTERED PROFESSIONAL ENGINEER KEITH F. DE LAPP No. 48214 Exp. 6-30-16 CIVIL STATE OF CALIFORNIA

PROJECT ENGINEER DATE

SAN FRANCISQUITO CREEK JOINT POWERS AUTHORITY

ACCEPTED BY DISTRICT

PROJECT ENGINEER DATE

PROJECT NAME AND SHEET DESCRIPTION:

SAN FRANCISQUITO CREEK FLOOD REDUCTION, ECOSYSTEM RESTORATION, & RECREATION PROJECT

SAN FRANCISQUITO CREEK FLOOD WALL
SHEET PILE DETAILS NO. 5

SCALE	PROJECT NUMBER
AS SHOWN	26284002
VERIFY SCALES 0 1" BAR IS ONE INCH ON ORIGINAL DRAWING IF NOT ONE INCH ON THIS SHEET, ADJUST SCALES ACCORDINGLY	SHEET CODE: S-5
	SHEET NUMBER: 89 OF 126

DOCUMENT NUMBER: CAD_GD-C-3011-XXXXXX

USERNAME: BillShad Tue 08 Jul 2008 09:32am
FILENAME: C:\pwworking\sac\d0171341\S-05 SFCJPA-RW

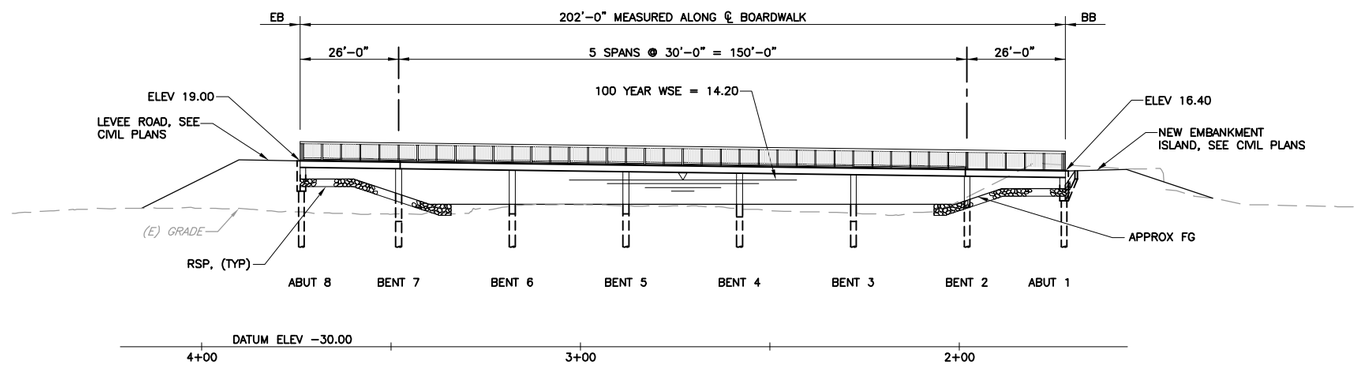

ELEVATION
SCALE: 1"=20'

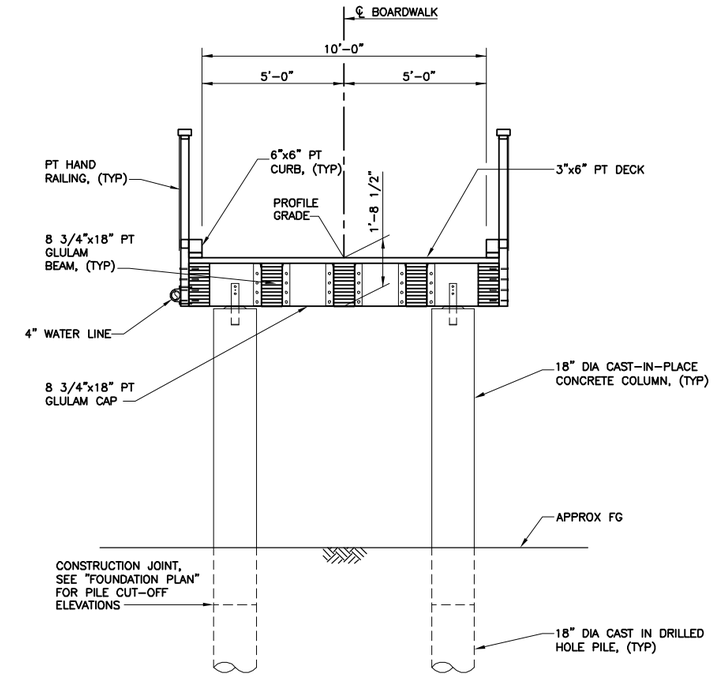

TYPICAL SECTION
SCALE: 3/8"=1'-0"

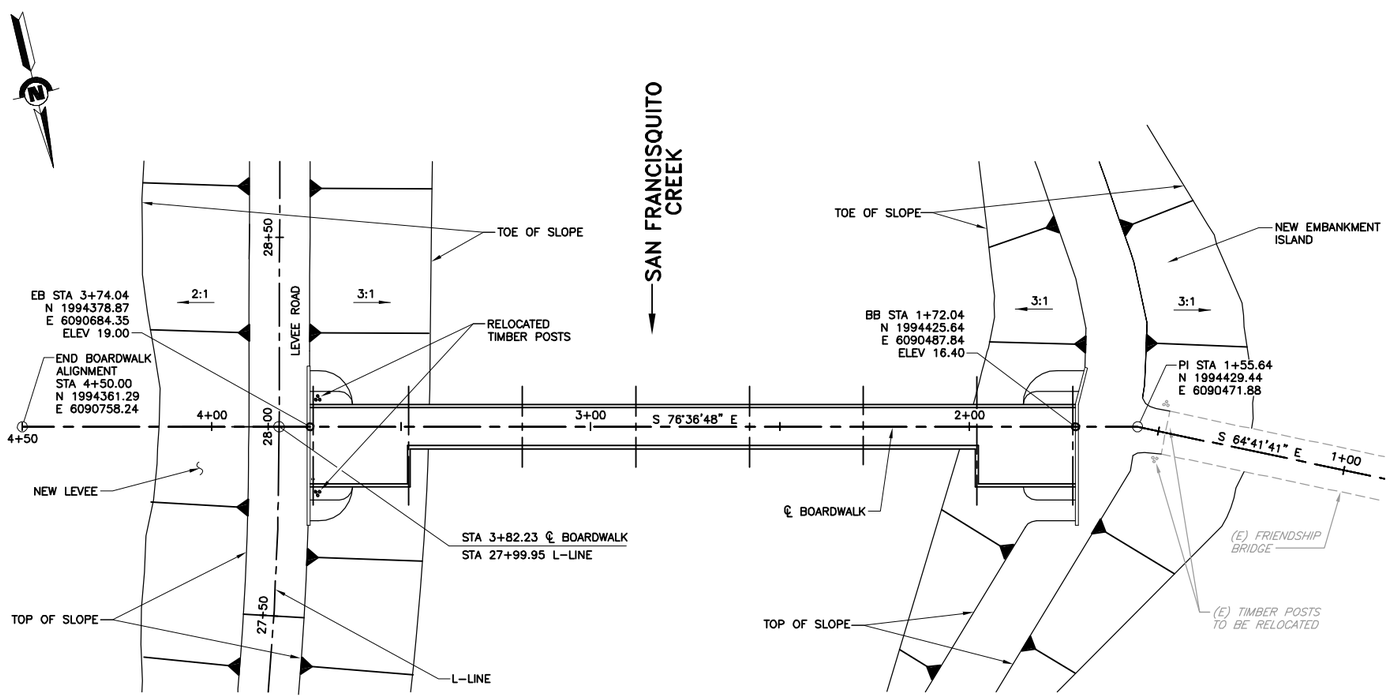

PLAN
SCALE: 1"=20'

STRUCTURAL NOTES:

1. CODE: AASHTO LRFD BRIDGE DESIGN SPECIFICATIONS, 4TH EDITION DATED 2008 AND AASHTO LRFD GUIDE SPECIFICATIONS FOR THE DESIGN OF PEDESTRIAN BRIDGES 2009 SEISMIC: ZONE 4 – CALTRANS SEISMIC DESIGN CRITERIA (SDC) VERSION 1.4 JULY 2006.
2. LIVE LOAD: 90 PSF PEDESTRIAN LOADING.
3. SPECIFICATIONS: 2006 CALTRANS STANDARD SPECIFICATIONS.
4. FOUNDATION: SEE SOILS REPORTS AS PREPARED BY GEI CONSULTANTS, DATED DECEMBER 2011. ALL FOUNDATION EXCAVATIONS SHALL BE INSPECTED AND APPROVED BY A LICENSED SOILS ENGINEER PRIOR TO PLACING ANY FOUNDATION CONCRETE.
5. CONCRETE: CEMENT SHALL BE TYPE V PER ASTM C150–96. READY MIXED PER ASTM C–94. MINIMUM 28 DAY COMPRESSIVE STRENGTH = 4000 PSI. MAX SLUMP = 3". MAX WATER–CEMENTITIOUS MATERIALS RATIO, BY WEIGHT WITH NORMAL–WEIGHT AGGREGATE CONCRETE SHALL BE 0.45. FY = 60 KSI; F'C = 3.6 KSI.
6. REINFORCEMENT: REBAR, DEFORMED BARS, ASTM A615–60 EPOXY COATED. LAP BARS 38 BAR DIAMETERS MINIMUM AT SPLICES, CORNERS, AND INTERSECTIONS.
7. STRUCTURAL STEEL: ALL STRUCTURAL STEEL TO BE HOT–DIPPED GALVANIZED PER ASTM 123. FABRICATE IN ACCORDANCE WITH AISC MANUAL OF STEEL. STRUCTURAL STEEL – ASTM A36, BOLTS – ASTM A307 GALVANIZED.
8. WOOD: ALL SAWN AND GLUE LAMINATED WOOD TO BE PRESSURE TREATED (PT). FRAMING ANCHORS AND HANGERS SHALL BE SIMPSON MANUFACTURER HOT–DIPPED GALVANIZED OR EQUAL. ALL SAWN LUMBER SHALL BE STAMPED WITH THE GRADE MARK OF AN APPROVED LUMBER GRADING AGENCY. ALL LUMBER SHALL HAVE A MINIMUM SPECIFIC GRAVITY OF 0.50. MOISTURE CONTENT AT THE TIME OF AND THROUGHOUT CONSTRUCTION SHALL NOT EXCEED 19%. SAWN LUMBER SHALL BE DOUGLAS FIR LARCH, NO. 1 GRADE. GLUE–LAMINATED BEAMS SHALL BE DOUGLAS FIR COMBINATION 16F–V6, AND SHALL HAVE THE FOLLOWING MINIMUM PROPERTIES:

   Fb = 1600 PSI; Fv = 265 PSI; E = 1,500,000 PSI; Fc (PARALLEL) = 1550 PSI; Fc (PERPENDICULAR) = 560 PSI
9. PILES: SEE "PILE DATA TABLE" ON "FOUNDATION PLAN" SHEET.
10. GROUT: ALL GROUT SHALL BE 5,000 PSI MINIMUM, NON–SHRINK FLOWABLE GROUT AND INSTALLED BEFORE ADDING VERTICAL LOAD.

REV	DESCRIPTION	DATE	APPR.

HDR

DATE: JULY 2015
DESIGN: KS
DRAWN: JV
CHECKED: JM

ENGINEERING CERTIFICATION
REGISTERED PROFESSIONAL ENGINEER — KYLE A. SANFORD — No. C77819 — Exp. 06-30-17 — CIVIL — STATE OF CALIFORNIA
PROJECT ENGINEER DATE

SAN FRANCISQUITO CREEK JOINT POWERS AUTHORITY
ACCEPTED BY DISTRICT
PROJECT ENGINEER DATE

PROJECT NAME AND SHEET DESCRIPTION:
SAN FRANCISQUITO CREEK FLOOD REDUCTION, ECOSYSTEM RESTORATION, & RECREATION PROJECT
SAN FRANCISQUITO CREEK BOARDWALK GENERAL PLAN

SCALE: AS SHOWN
VERIFY SCALES: 0 — 1"
BAR IS ONE INCH ON ORIGINAL DRAWING IF NOT ONE INCH ON THIS SHEET, ADJUST SCALES ACCORDINGLY

PROJECT NUMBER: 26284002
SHEET CODE: S-6
SHEET NUMBER: 90 OF 126

USERNAME: BillShad Tue 08 Jul 2008 09:32am
FILENAME: C:\pwworking\sac\d0171341\S-06 SFCJPA-GP
DOCUMENT NUMBER: CAD_GD-C-3011-XXXXXX

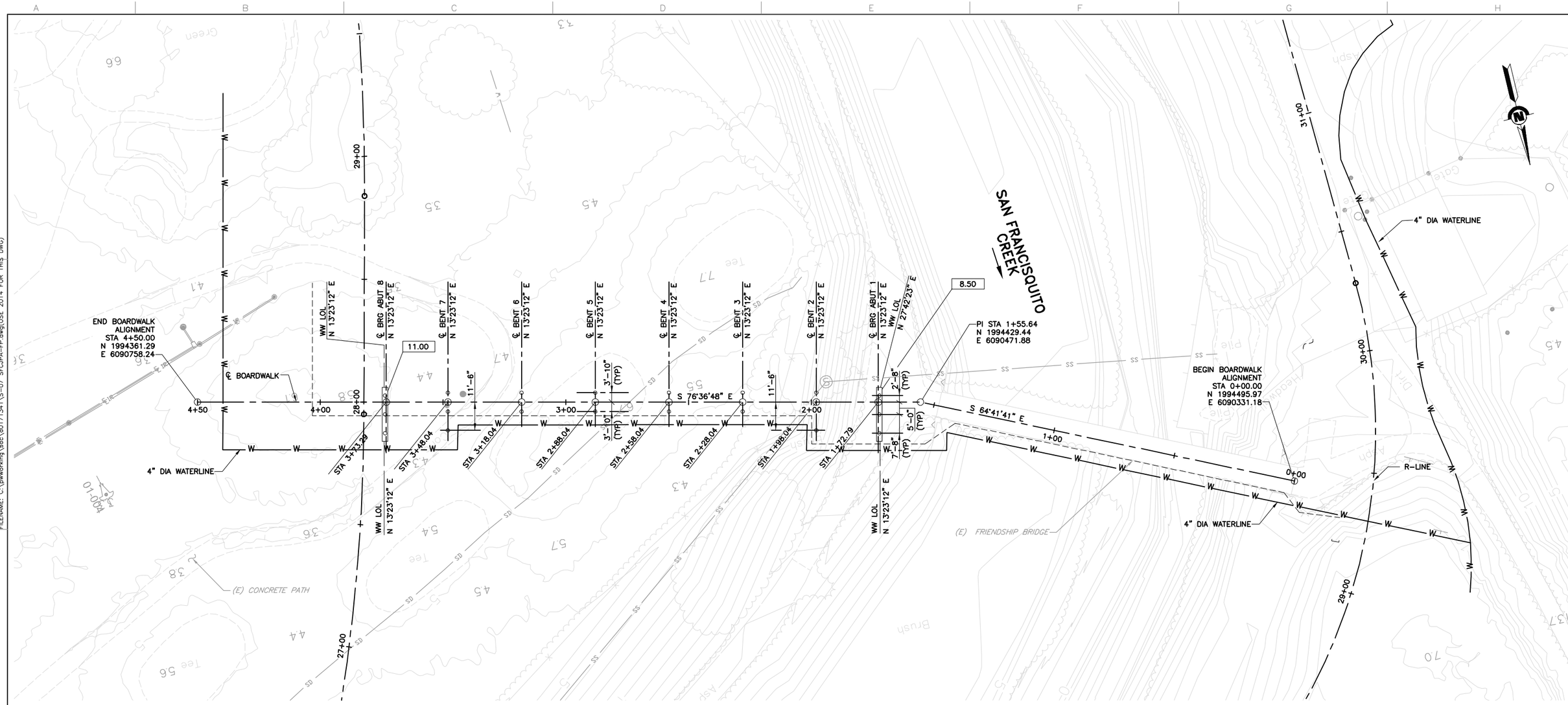

PLAN

SCALE: 1"=20'

PILE DATA TABLE						
LOCATION	PILE TYPE	NOMINAL RESISTANCE (KIPS)		DESIGN TIP ELEVATIONS (FT)	SPECIFIED TIP ELEVATIONS (FT)	CUT-OFF ELEVATIONS (FT)
		COMPRESSION	TENSION			
ABUT 1	18" DIA CAST IN DRILLED HOLE	90	0	-25.00	-25.00	8.75
BENT 2	18" DIA CAST IN DRILLED HOLE	90	0	-25.00	-25.00	6.75
BENT 3	18" DIA CAST IN DRILLED HOLE	90	0	-25.00	-25.00	3.00
BENT 4	18" DIA CAST IN DRILLED HOLE	90	0	-25.00	-25.00	4.25
BENT 5	18" DIA CAST IN DRILLED HOLE	90	0	-25.00	-25.00	5.00
BENT 6	18" DIA CAST IN DRILLED HOLE	90	0	-25.00	-25.00	5.00
BENT 7	18" DIA CAST IN DRILLED HOLE	90	0	-25.00	-25.00	3.00
ABUT 8	18" DIA CAST IN DRILLED HOLE	90	0	-25.00	-25.00	11.25

DESIGN TIP ELEVATIONS ARE CONTROLLED BY THE FOLLOWING DEMANDS: (1) COMPRESSION, (2) TENSION, (3) LATERAL LOADS.

NOTES:

1. THE CONTRACTOR SHALL VERIFY ALL CONTROLLING FIELD CONDITIONS BEFORE ORDERING OR FABRICATING ANY MATERIAL OR PERFORMING ANY WORK.
2. SEE "CIVIL PLANS" FOR TYPE AND LOCATION OF ALL EXISTING AND PROPOSED UTILITIES.
3. LOCATION OF EXISTING UTILITIES SHOWN ARE APPROXIMATE. THE CONTRACTOR SHALL VERIFY LOCATIONS OF ALL AFFECTED UTILITIES PRIOR TO PERFORMING ANY EXCAVATION.
4. FOR SURVEY CONTROL POINTS, SEE "CIVIL PLANS".

LEGEND:

INDICATES BOTTOM OF FOOTING.

REV	DESCRIPTION	DATE	APPR.

HDR

DATE: JULY 2015
DESIGN: KS
DRAWN: JV
CHECKED: JM

ENGINEERING CERTIFICATION
REGISTERED PROFESSIONAL ENGINEER KYLE A. SANFORD No. C77819 Exp. 06-30-17 CIVIL STATE OF CALIFORNIA
PROJECT ENGINEER DATE

SAN FRANCISQUITO CREEK JOINT POWERS AUTHORITY
ACCEPTED BY DISTRICT
PROJECT ENGINEER DATE

PROJECT NAME AND SHEET DESCRIPTION:

SAN FRANCISQUITO CREEK FLOOD REDUCTION, ECOSYSTEM RESTORATION, & RECREATION PROJECT

SAN FRANCISQUITO CREEK BOARDWALK FOUNDATION PLAN

SCALE: AS SHOWN
VERIFY SCALES: 0 1"
BAR IS ONE INCH ON ORIGINAL DRAWING IF NOT ONE INCH ON THIS SHEET, ADJUST SCALES ACCORDINGLY

PROJECT NUMBER: 26284002
SHEET CODE: S-7
SHEET NUMBER: 91 OF 126

DOCUMENT NUMBER: CAD_GD-C-3011-XXXXXX

USERNAME: BillShad Tue 08 Jul 2008 09:32am
FILENAME: C:\pwworking\sac\d0171341\S-07 SFCJPA-FP.dwg(USE 2014 FOR THIS DWG)

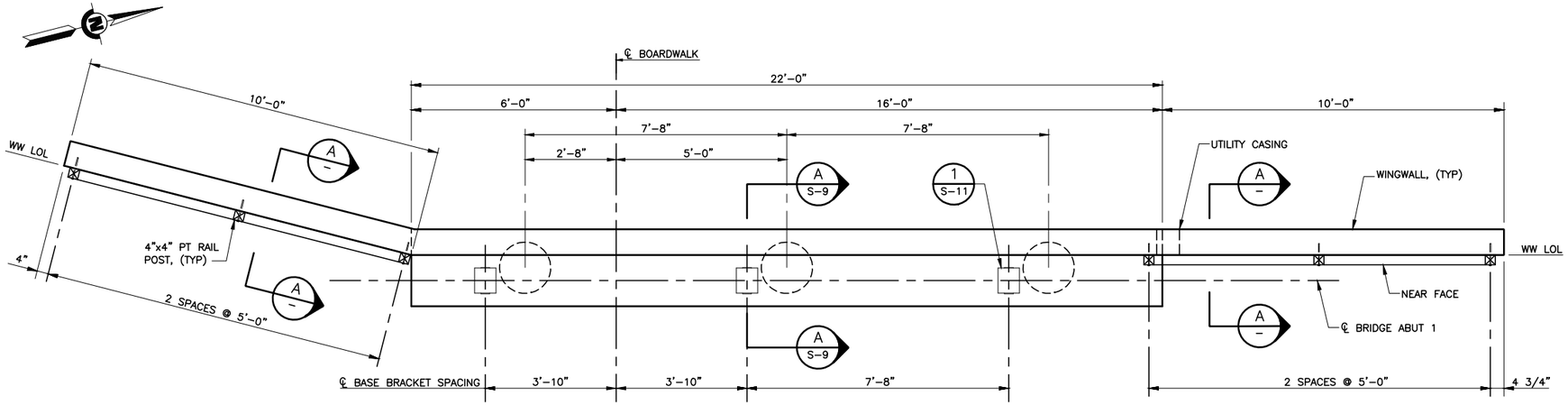

PLAN – ABUTMENT 1

SCALE: 1/2"=1'-0"

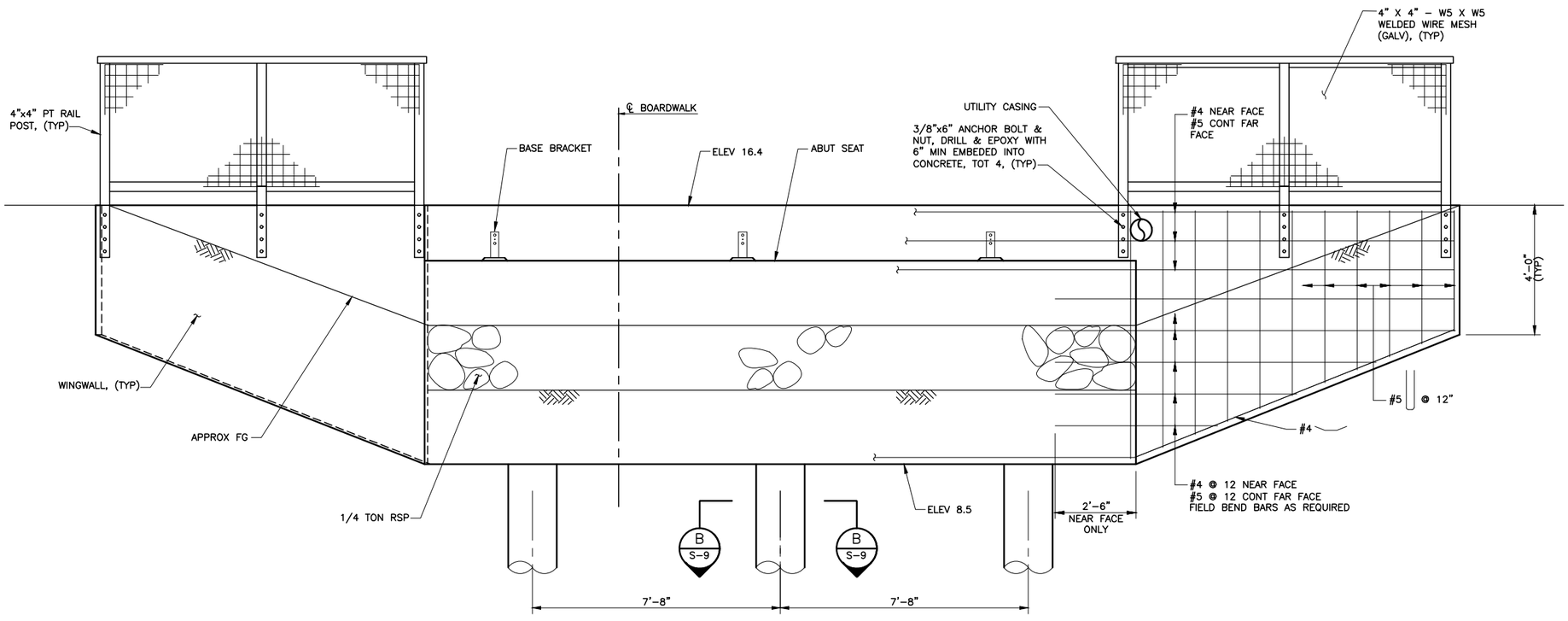

ELEVATION – ABUTMENT 1

SCALE: 1/2"=1'-0"

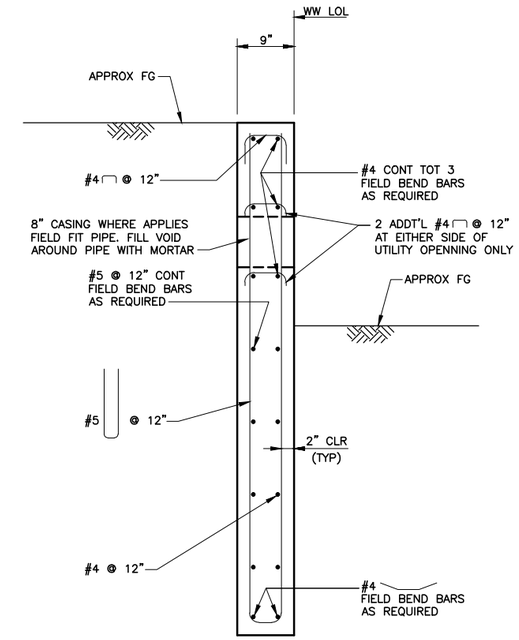

SECTION A – TYPICAL WINGWALL SECTION

SCALE: 1" = 1'-0"

NOTES:

1. NORTH WINGWALL REINF SHOWN, SOUTH WINGWALL REINF SIMILAR.
2. FOR RAILING DETAILS NOT SHOWN, SEE "MISCELLANEOUS DETAILS" SHEET.
3. FOR ABUTMENT TYPICAL SECTION, SEE "ABUTMENT DETAILS NO. 2" SHEET.
4. FOR PILE DETAILS, SEE "ABUTMENT DETAILS NO. 2" SHEET.
5. SEE "GENERAL PLAN" SHEET FOR PLAN AND PROFILE.

REV	DESCRIPTION	DATE	APPR.

HDR

DATE: JULY 2015
DESIGN: KS
DRAWN: JV
CHECKED: JM

ENGINEERING CERTIFICATION
REGISTERED PROFESSIONAL ENGINEER — KYLE A. SANFORD — No. C77819 — Exp. 06-30-17 — CIVIL — STATE OF CALIFORNIA
PROJECT ENGINEER DATE

SAN FRANCISQUITO CREEK JOINT POWERS AUTHORITY
ACCEPTED BY DISTRICT
PROJECT ENGINEER DATE

PROJECT NAME AND SHEET DESCRIPTION:
SAN FRANCISQUITO CREEK FLOOD REDUCTION, ECOSYSTEM RESTORATION, & RECREATION PROJECT
SAN FRANCISQUITO CREEK BOARDWALK ABUTMENT DETAILS NO. 1

SCALE: AS SHOWN
VERIFY SCALES: 0 — 1" BAR IS ONE INCH ON ORIGINAL DRAWING IF NOT ONE INCH ON THIS SHEET, ADJUST SCALES ACCORDINGLY
PROJECT NUMBER: 26284002
SHEET CODE: S-8
SHEET NUMBER: 92 OF 126

DOCUMENT NUMBER: CAD_GD-C-3011-XXXXXX

USERNAME: BillShad Tue 08 Jul 2008 09:32am
FILENAME: C:\pwworking\sac\d0171341\S-08 SFCJPA-A1

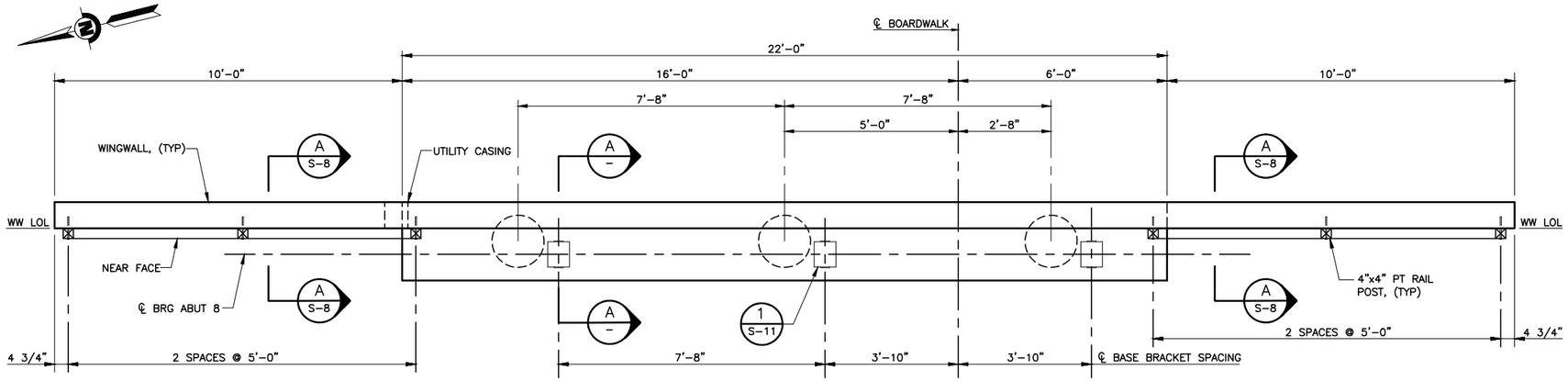

PLAN – ABUTMENT 8

SCALE: 1/2"=1'-0"

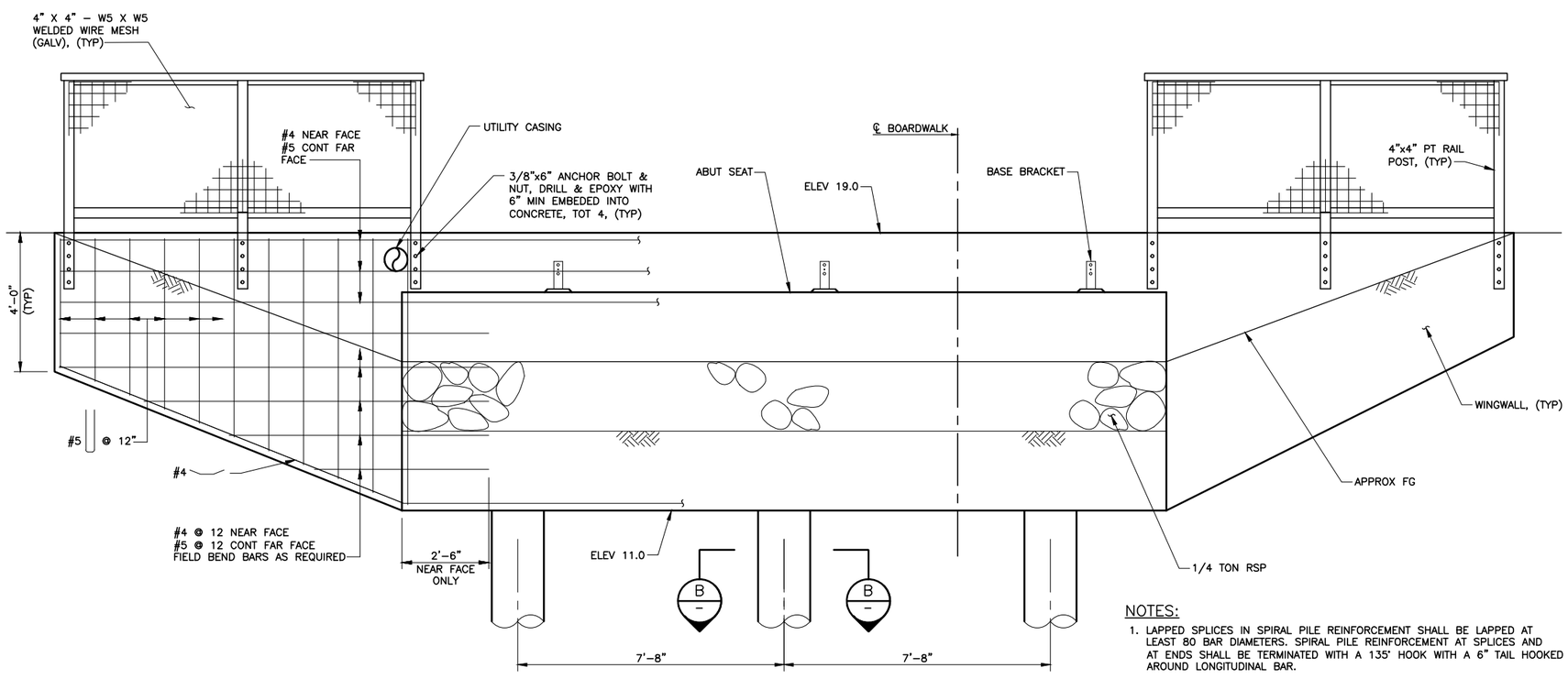

ELEVATION – ABUTMENT 8

SCALE: 1/2"=1'-0"

NOTES:

1. LAPPED SPLICES IN SPIRAL PILE REINFORCEMENT SHALL BE LAPPED AT LEAST 80 BAR DIAMETERS. SPIRAL PILE REINFORCEMENT AT SPLICES AND AT ENDS SHALL BE TERMINATED WITH A 135° HOOK WITH A 6" TAIL HOOKED AROUND LONGITUDINAL BAR.
2. NO REINFORCEMENT SPLICES ALLOWED IN MAIN COLUMN/PILE REINFORCEMENT.
3. FOR WINGWALL TYPICAL SECTION, SEE "ABUTMENT DETAILS NO. 1" SHEET.
4. FOR RAILING DETAILS NOT SHOWN, SEE "MISCELLANEOUS DETAILS" SHEET.
5. SEE "GENERAL PLAN" SHEET FOR PLAN AND PROFILE.

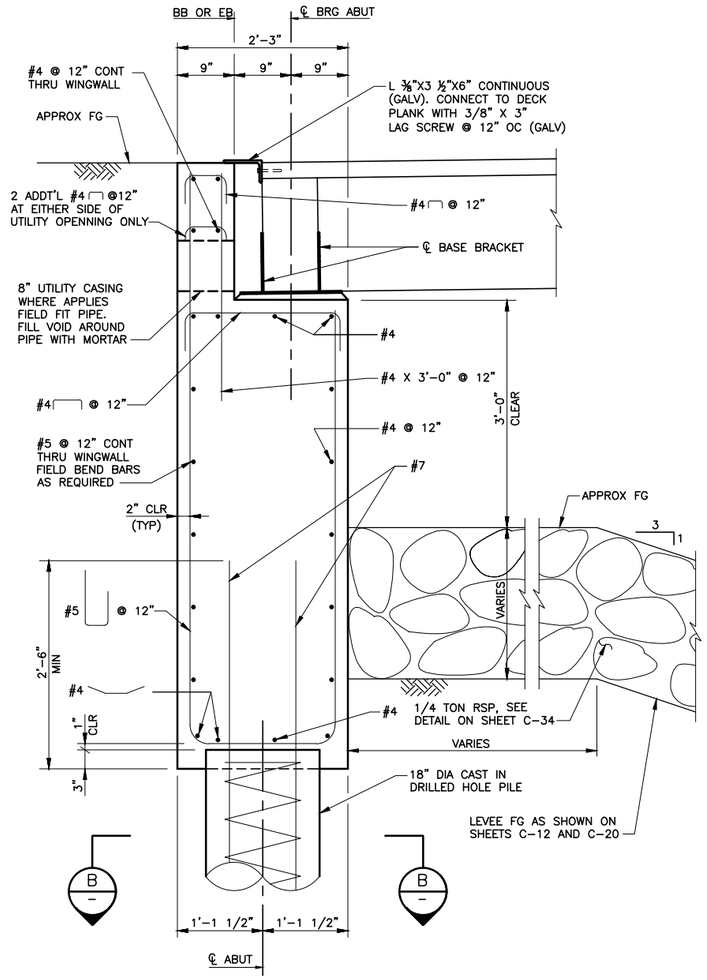

SECTION A – TYPICAL ABUTMENT SECTION

SCALE: 1"=1'-0"

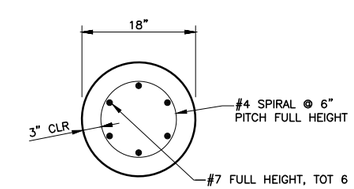

SECTION B – TYPICAL PILE/COLUMN SECTION

SCALE: 1"=1'-0"

REV	DESCRIPTION	DATE	APPR.

HDR

DATE: JULY 2015
DESIGN: KS
DRAWN: JV
CHECKED: JM

ENGINEERING CERTIFICATION
REGISTERED PROFESSIONAL ENGINEER — KYLE A. SAMPRO — No. C77819 — Exp. 06-30-17 — CIVIL — STATE OF CALIFORNIA
PROJECT ENGINEER DATE

SAN FRANCISQUITO CREEK JOINT POWERS AUTHORITY

ACCEPTED BY DISTRICT
PROJECT ENGINEER DATE

PROJECT NAME AND SHEET DESCRIPTION:

SAN FRANCISQUITO CREEK FLOOD REDUCTION, ECOSYSTEM RESTORATION, & RECREATION PROJECT

SAN FRANCISQUITO CREEK BOARDWALK ABUTMENT DETAILS NO. 2

SCALE: AS SHOWN

VERIFY SCALES: 0 — 1"
BAR IS ONE INCH ON ORIGINAL DRAWING IF NOT ONE INCH ON THIS SHEET, ADJUST SCALES ACCORDINGLY

PROJECT NUMBER: 26284002

SHEET CODE: S-9

SHEET NUMBER: 93 OF 126

USERNAME: BillShad Tue 08 Jul 2008 09:32am
FILENAME: C:\pwworking\sac\d0171341\S-09 SFCJPA-A2
DOCUMENT NUMBER: CAD_GD-C-3011-XXXXXX

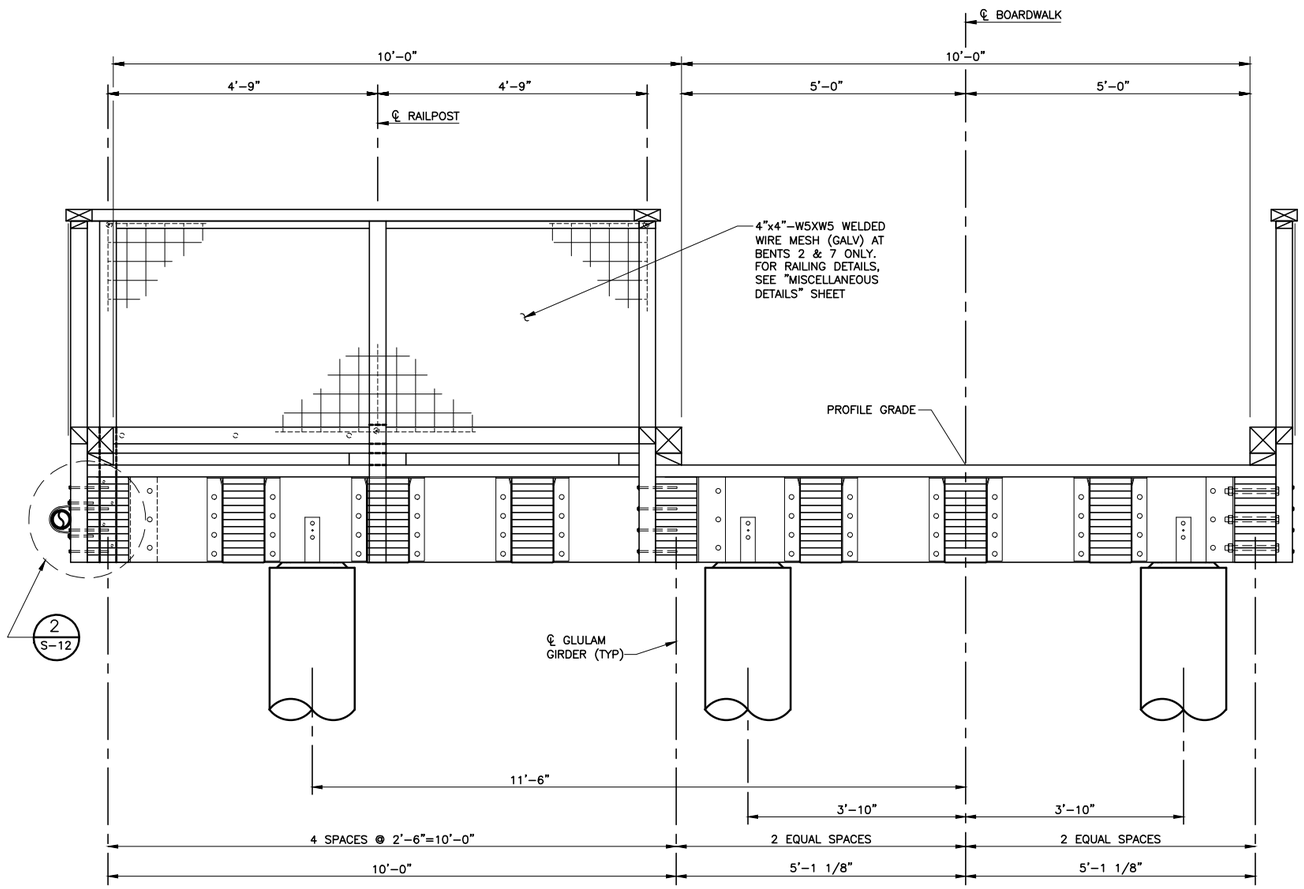

NOTE:
SECTION AT BENT 2 SHOWN LOOKING UPSTATION,
SECTION AT BENT 7 AND ABUTMENTS 1 & 8 SIMILAR.

TYPICAL SECTION AT BENT 2

SCALE: 3/4"=1'-0"

FOR INFORMATION NOT SHOWN, SEE "SECTION AT BENTS 3-6".

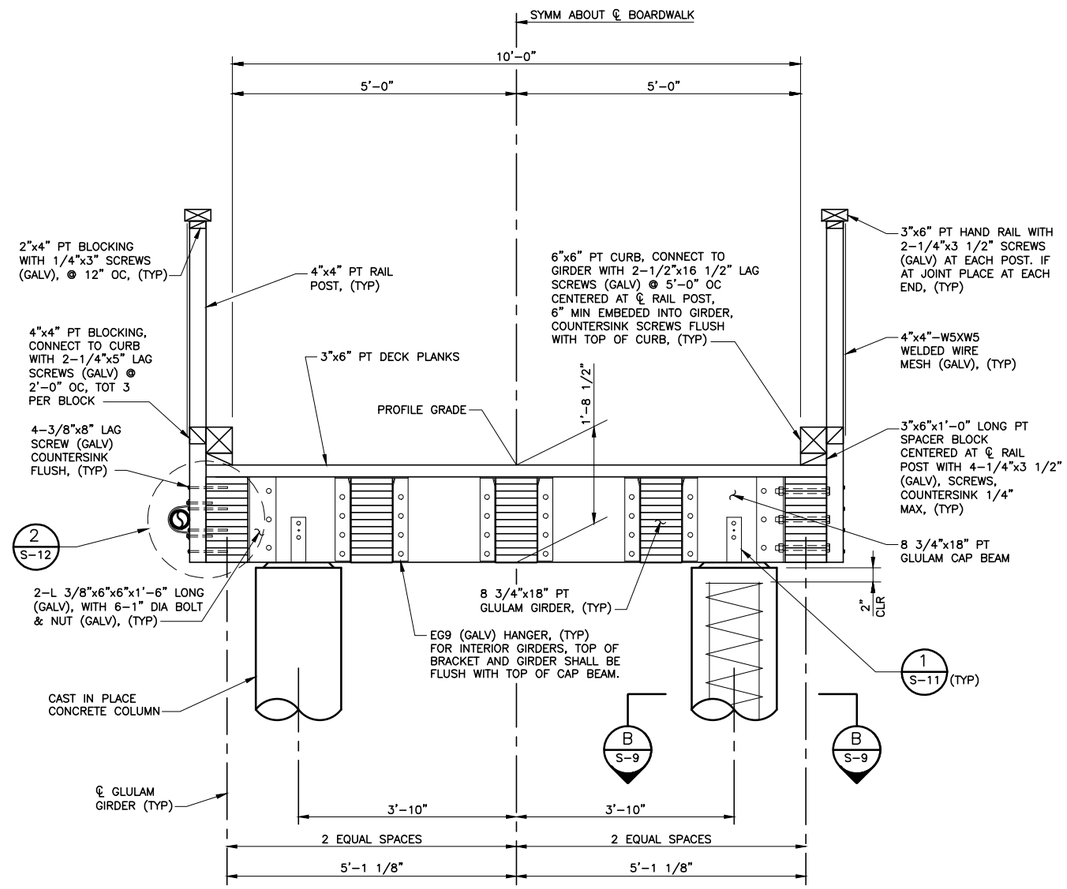

TYPICAL SECTION AT BENTS 3-6

SCALE: 3/4"=1'-0"

USERNAME: BillShad Tue 08 Jul 2008 09:32am
FILENAME: C:\pwworking\sac\d0171341\S-10 SFCJPA-TS

DOCUMENT NUMBER: CAD_GD-C-3011-XXXXXX

REV	DESCRIPTION	DATE	APPR.

HDR

DATE	ENGINEERING CERTIFICATION
JULY 2015	KYLE A. SANDO, REGISTERED PROFESSIONAL ENGINEER, No. C77819, Exp. 06-30-17, CIVIL, STATE OF CALIFORNIA
DESIGN KS	
DRAWN JV	
CHECKED JM	PROJECT ENGINEER DATE

SAN FRANCISQUITO CREEK JOINT POWERS AUTHORITY

ACCEPTED BY DISTRICT

PROJECT ENGINEER DATE

PROJECT NAME AND SHEET DESCRIPTION:

SAN FRANCISQUITO CREEK FLOOD REDUCTION, ECOSYSTEM RESTORATION, & RECREATION PROJECT

SAN FRANCISQUITO CREEK BOARDWALK TYPICAL SECTIONS

SCALE	PROJECT NUMBER
AS SHOWN	26284002
VERIFY SCALES 0 1" BAR IS ONE INCH ON ORIGINAL DRAWING IF NOT ONE INCH ON THIS SHEET, ADJUST SCALES ACCORDINGLY	SHEET CODE: S-10
	SHEET NUMBER: 94 OF 126

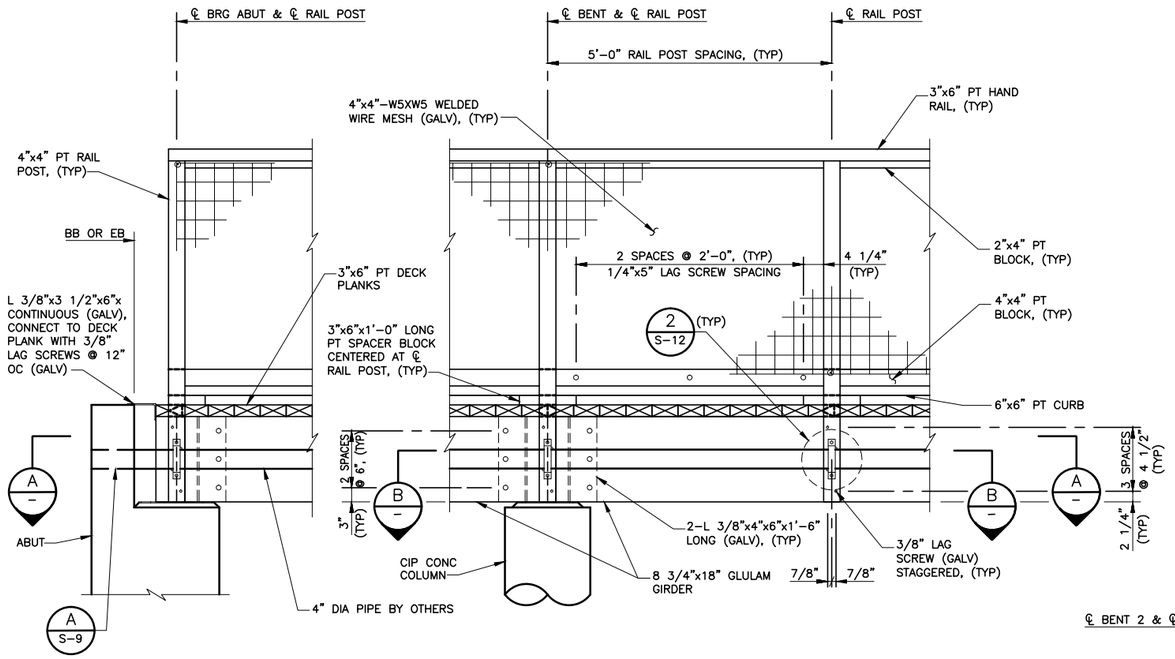

PARTIAL ELEVATION

SCALE: 3/4"=1'-0"

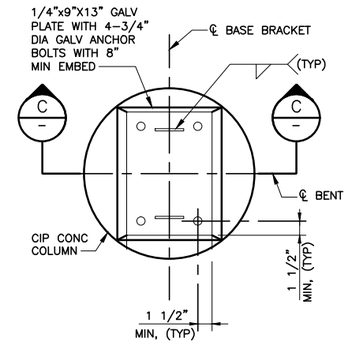

AT BENT

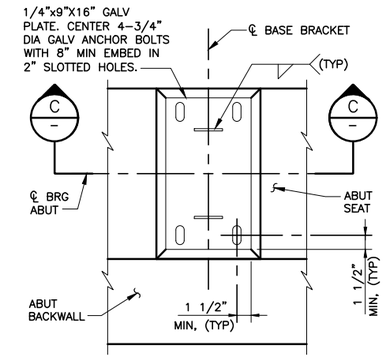

AT ABUTMENT

DETAIL 1 BASE BRACKET

SCALE: 1 1/2" = 1'-0"

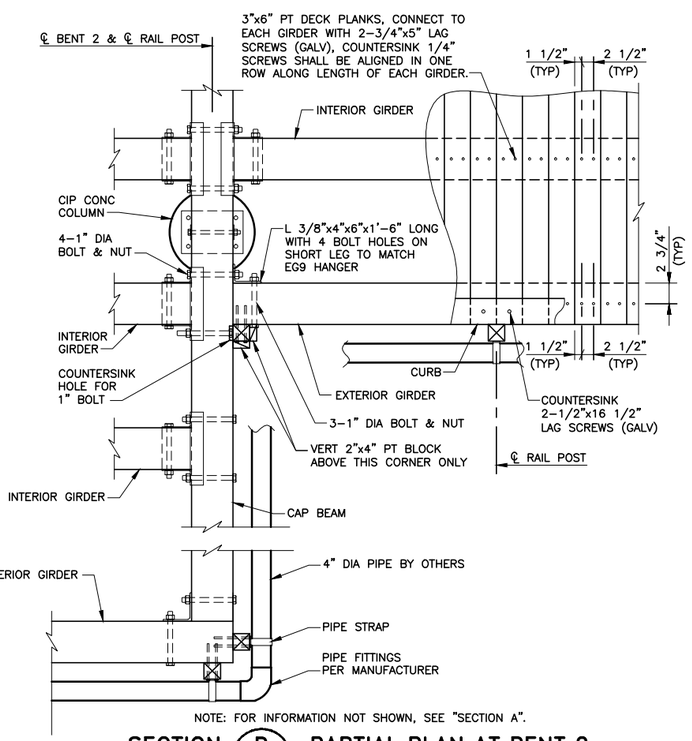

NOTE: FOR INFORMATION NOT SHOWN, SEE "SECTION A".

SECTION B PARTIAL PLAN AT BENT 2

SCALE: 3/4"=1'-0" BENT 7 SIMILAR

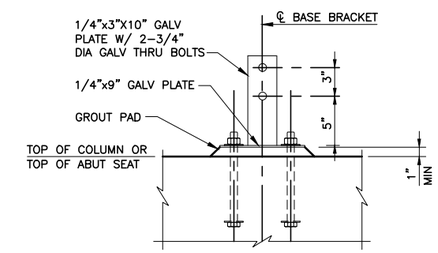

SECTION C THRU BASE BRACKET

SCALE: 1 1/2" = 1'-0"

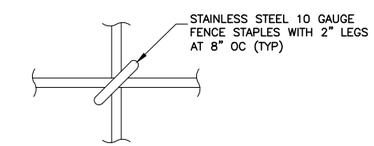

TYPICAL WIRE CONNECTION DETAIL

NO SCALE

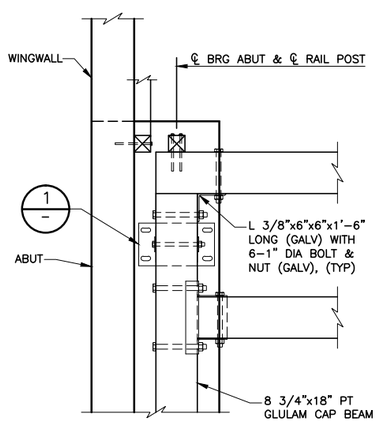

NOTE:
SEE SECTION B FOR PT PLANK DETAILS.

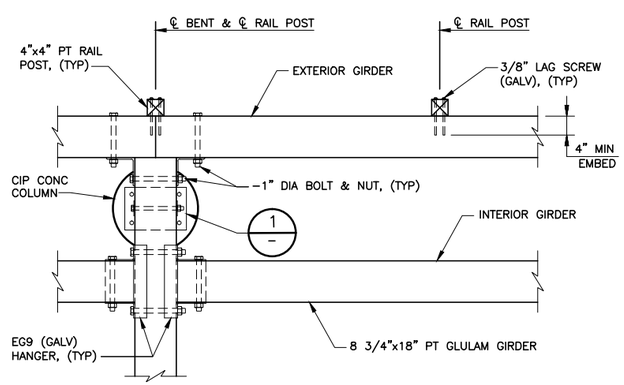

SECTION A PARTIAL PLAN

SCALE: 3/4"=1'-0"

REV	DESCRIPTION	DATE	APPR.

HDR

DATE	ENGINEERING CERTIFICATION
JULY 2015	KYLE A. SANDRO, No. C77819, Exp. 06-30-17, CIVIL, REGISTERED PROFESSIONAL ENGINEER, STATE OF CALIFORNIA
DESIGN KS	
DRAWN JV	
CHECKED JM	PROJECT ENGINEER DATE

SAN FRANCISQUITO CREEK JOINT POWERS AUTHORITY

ACCEPTED BY DISTRICT

PROJECT ENGINEER DATE

PROJECT NAME AND SHEET DESCRIPTION:

SAN FRANCISQUITO CREEK FLOOD REDUCTION, ECOSYSTEM RESTORATION, & RECREATION PROJECT

SAN FRANCISQUITO CREEK BOARDWALK
MISCELLANEOUS DETAILS NO. 1

SCALE	PROJECT NUMBER
AS SHOWN	26284002
VERIFY SCALES 0 1" BAR IS ONE INCH ON ORIGINAL DRAWING IF NOT ONE INCH ON THIS SHEET, ADJUST SCALES ACCORDINGLY	SHEET CODE: S-11
	SHEET NUMBER: 95 OF 126

DOCUMENT NUMBER: CAD_GD-C-3011-XXXXXX

USERNAME: BillShad Tue 08 Jul 2008 09:32am
FILENAME: C:\pwworking\sac\d0171341\S-11 SFCJPA-MD

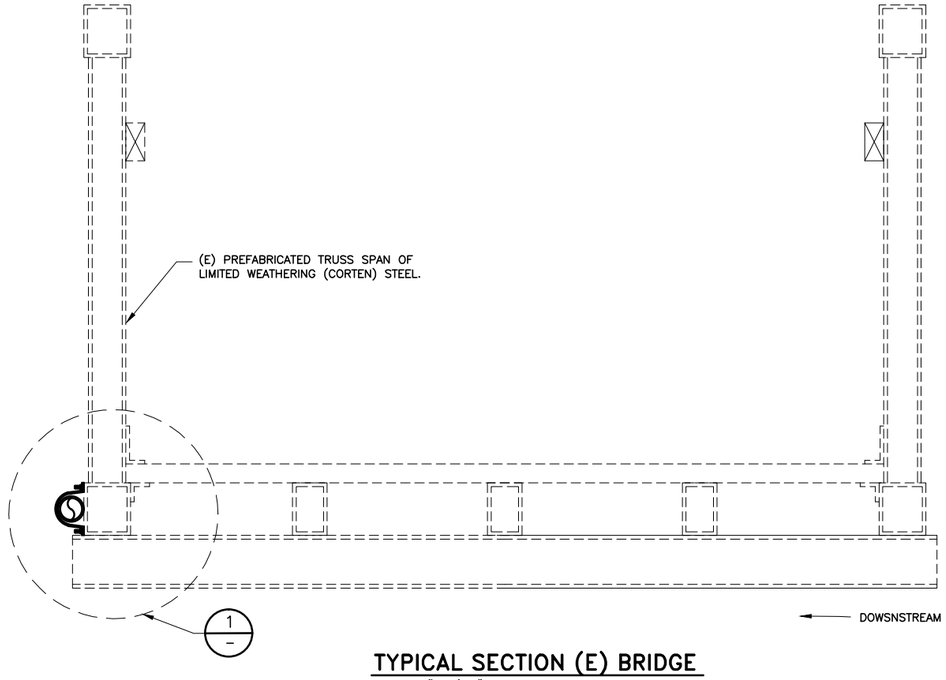

TYPICAL SECTION (E) BRIDGE

SCALE: 1"= 1'-0"

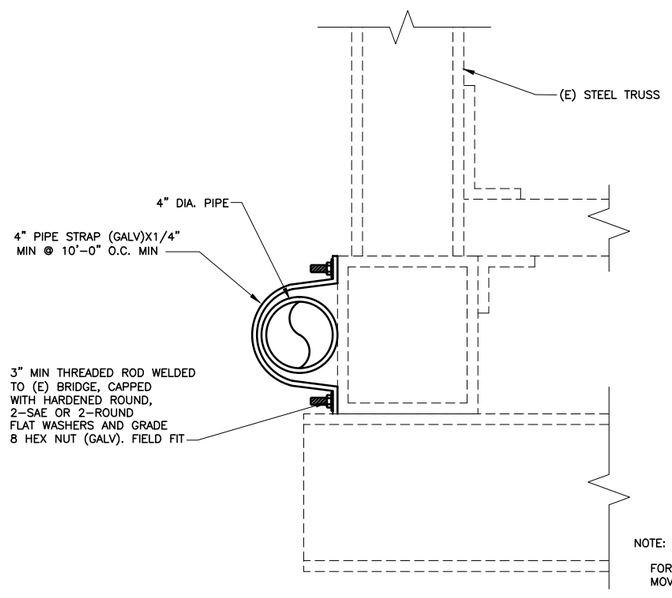

NOTE:

FOR LOCATION AND POSITIONING OF UNIVERSAL MOVEMENT JOINT AT EAST END OF BRIDGE, SEE "L" SHEETS.

DETAIL 1 – PIPE STRAP TO (E) BRIDGE

SCALE: 3" = 1'-0"

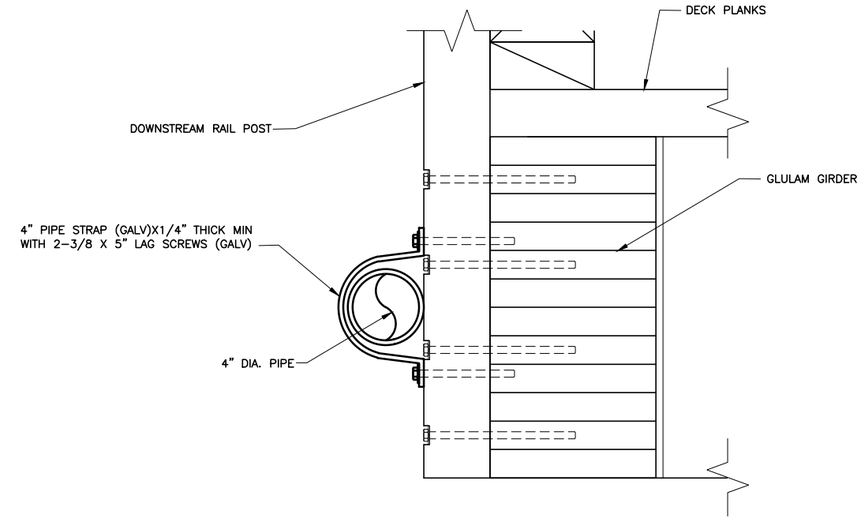

NOTE:

FOR INFORMATION NOT SHOWN, SEE S-10 "TYPICAL SECTIONS".

SECTION A – THRU PIPE STRAP

SCALE: 3"=1'-0"

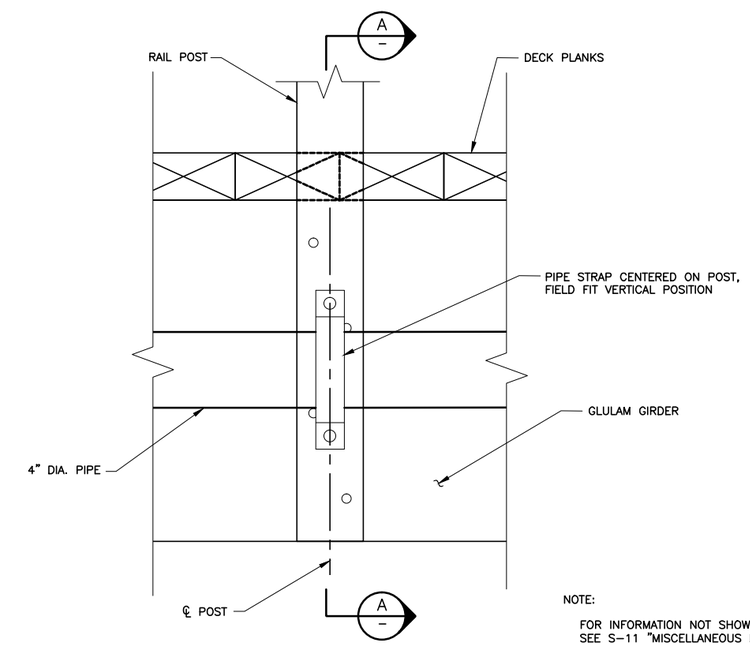

NOTE:

FOR INFORMATION NOT SHOWN, SEE S-11 "MISCELLANEOUS DETAILS NO. 1"

DETAIL 2 – PIPE STRAP

SCALE: 3" = 1'-0"

REV	DESCRIPTION	DATE	APPR.

HDR

DATE JULY 2015
DESIGN KS
DRAWN JV
CHECKED JM

ENGINEERING CERTIFICATION
REGISTERED PROFESSIONAL ENGINEER KYLE A. SANFORD No. C77819 Exp. 06-30-17 CIVIL STATE OF CALIFORNIA
PROJECT ENGINEER DATE

SAN FRANCISQUITO CREEK JOINT POWERS AUTHORITY
ACCEPTED BY DISTRICT
PROJECT ENGINEER DATE

PROJECT NAME AND SHEET DESCRIPTION:
SAN FRANCISQUITO CREEK
FLOOD REDUCTION, ECOSYSTEM
RESTORATION, & RECREATION PROJECT
SAN FRANCISQUITO CREEK BOARDWALK
MISCELLANEOUS DETAILS NO. 2

SCALE: AS SHOWN
VERIFY SCALES: 0 1"
BAR IS ONE INCH ON ORIGINAL DRAWING IF NOT ONE INCH ON THIS SHEET, ADJUST SCALES ACCORDINGLY

PROJECT NUMBER: 26284002
SHEET CODE: S-12
SHEET NUMBER: 96 OF 126

DOCUMENT NUMBER: CAD_GD-C-3011-XXXXXX

USERNAME: BillShad Tue 08 Jul 2008 09:32am
FILENAME: C:\Users\hsuarez\appdata\local\temp\AcPublish_1856\S-12 SFCJPA-MD

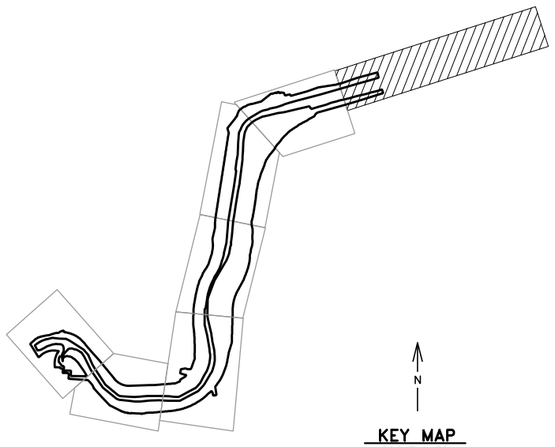

KEY MAP
SCALE: NTS

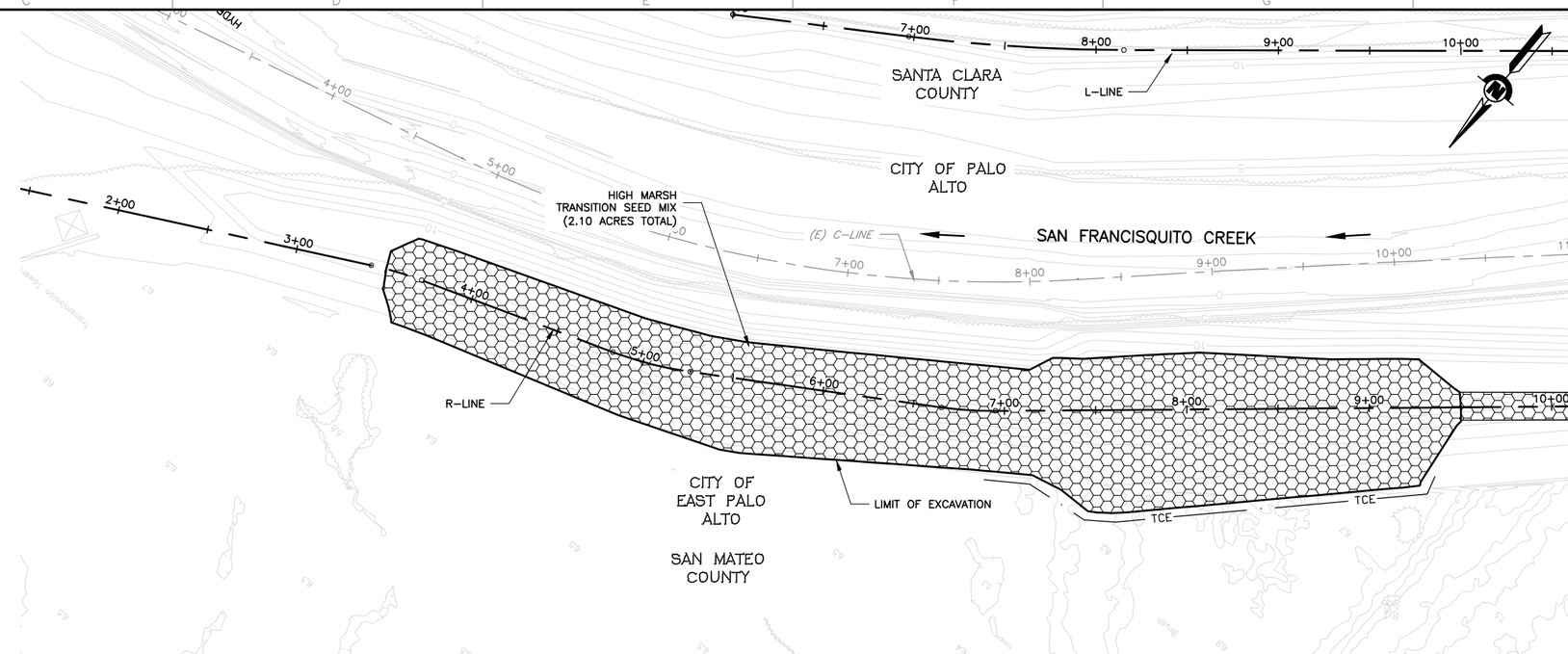

MATCHLINE 11+00
FOR CONTINUATION SEE BELOW

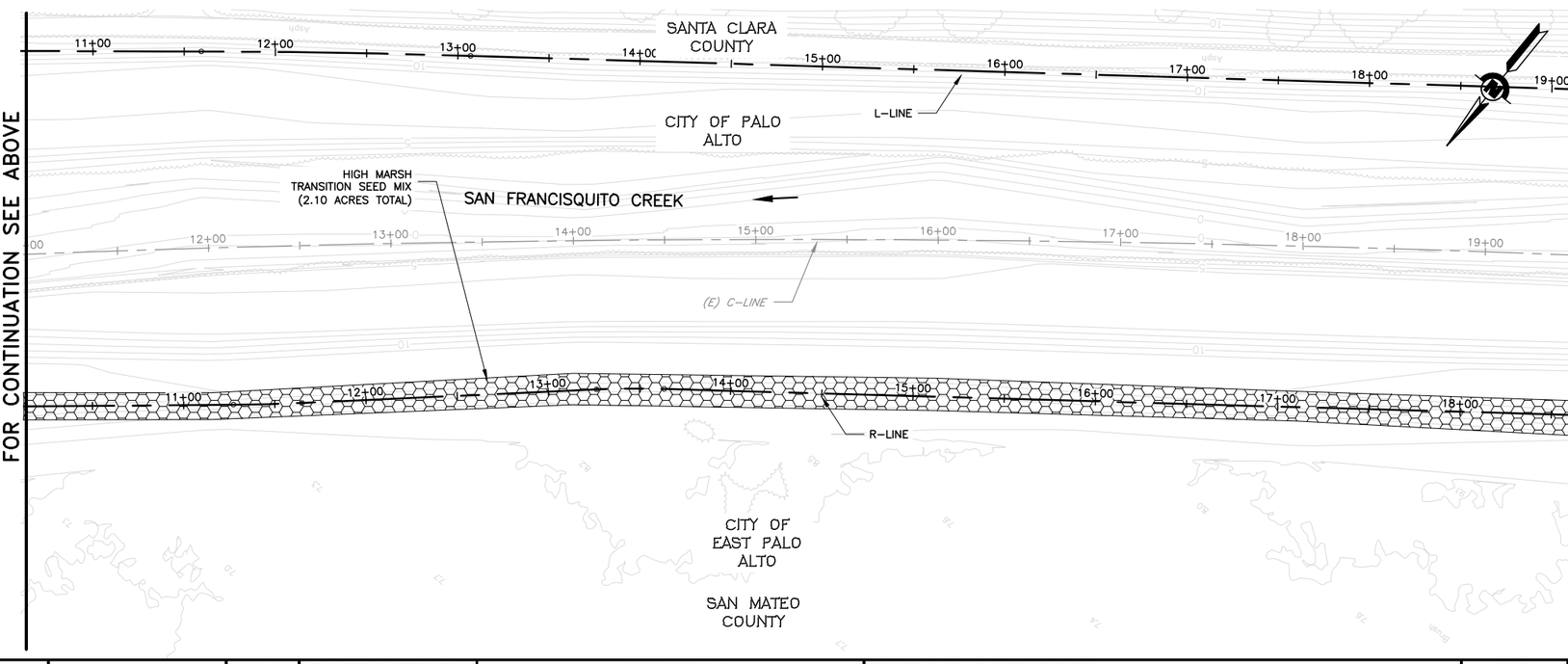

MATCHLINE 11+00
FOR CONTINUATION SEE ABOVE

MATCHLINE 19+50
FOR CONTINUATION SEE SHEET L-2

LEGEND:

- HIGH MARSH TRANSITION PLANTING ZONE
- HIGH MARSH PLANTING ZONE
- HIGH MARSH TRANSITION SEED MIX
- EROSION CONTROL SEED MIX
- ROCK SLOPE PROTECTION

SHEET NOTES:

1. SEE SHEET L-8 AND L-9 FOR PLANTING PALETTE AND DETAILS.
2. HIGH MARSH AND HIGH MARSH TRANSITION PLANT QUANTITIES ARE SHOWN PER SHEET (L-1 TO L-7).

REV	DESCRIPTION	DATE	APPR.

HDR

DATE	JULY 2015
DESIGN	M. CLARKE
DRAWN	H. SUAREZ
CHECKED	H. HABIG

ENGINEERING CERTIFICATION
LICENSED LANDSCAPE ARCHITECT — HABIG, HEARD & ASSOCIATES INC. — STATE OF CALIFORNIA
Signature
October 31, 2016
Renewal Date
Date
PROJECT ENGINEER DATE

SAN FRANCISQUITO CREEK
JOINT POWERS AUTHORITY
ACCEPTED BY DISTRICT
PROJECT ENGINEER DATE

PROJECT NAME AND SHEET DESCRIPTION:

SAN FRANCISQUITO CREEK FLOOD REDUCTION, ECOSYSTEM RESTORATION, & RECREATION PROJECT

PLANTING PLAN
C-LINE STATION 1+50 TO 19+50

SCALE: 1" = 40'
VERIFY SCALES: 0 — 1"
BAR IS ONE INCH ON ORIGINAL DRAWING IF NOT ONE INCH ON THIS SHEET, ADJUST SCALES ACCORDINGLY

PROJECT NUMBER: 26284002
SHEET CODE: L-1
SHEET NUMBER: 97 OF 126

DOCUMENT NUMBER: SFC_LP-C-1028-XXXXXXX

USERNAME: BillShad Tue 08 Jul 2008 09:32am
FILENAME: C:\pwworking\sac\d0171341\L1-L8(CF)

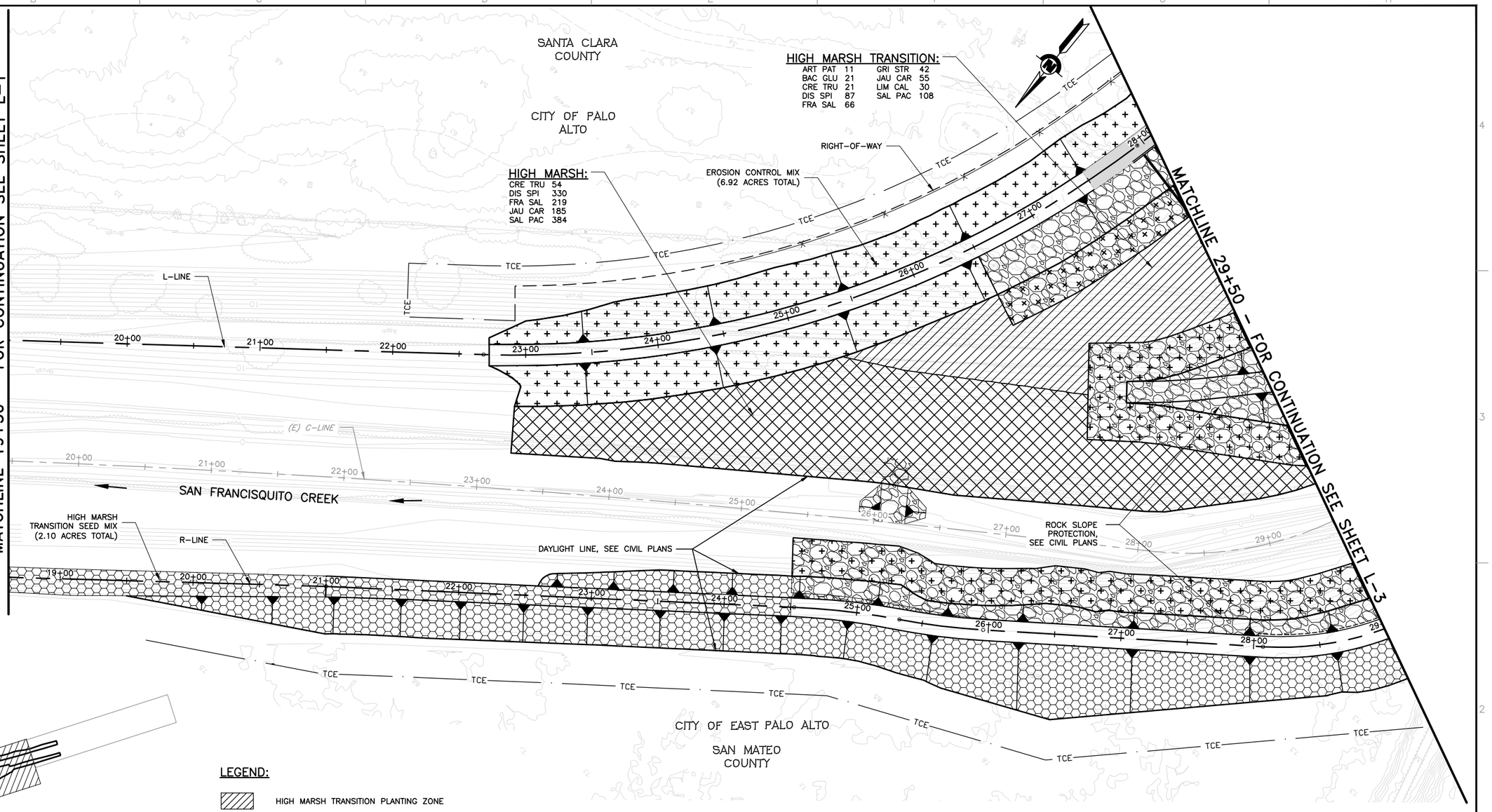

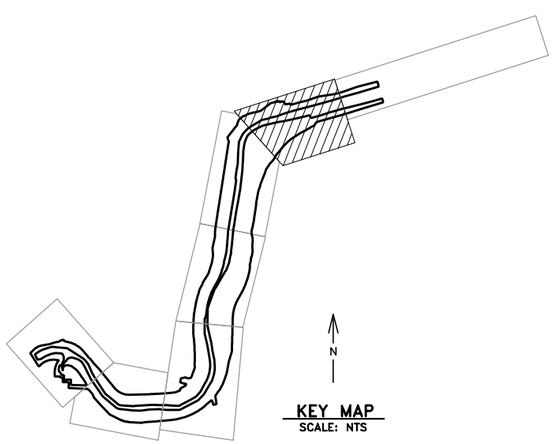

KEY MAP
SCALE: NTS

LEGEND:

- HIGH MARSH TRANSITION PLANTING ZONE
- HIGH MARSH PLANTING ZONE
- HIGH MARSH TRANSITION SEED MIX
- EROSION CONTROL SEED MIX
- ROCK SLOPE PROTECTION

SHEET NOTES:

1. SEE SHEET L-8 AND L-9 FOR PLANTING PALETTE AND DETAILS.
2. HIGH MARSH AND HIGH MARSH TRANSITION PLANT QUANTITIES ARE SHOWN PER SHEET (L-1 TO L-7).

REV	DESCRIPTION	DATE	APPR.

HDR

DATE	JULY 2015
DESIGN	M. CLARKE
DRAWN	H. SUAREZ
CHECKED	H. HABIG

ENGINEERING CERTIFICATION

LICENSED LANDSCAPE ARCHITECT — HEATH D. HABIG LIC. # 4208 — Signature — October 31, 2016 — Renewal Date — Date — STATE OF CALIFORNIA

PROJECT ENGINEER DATE

SAN FRANCISQUITO CREEK
JOINT POWERS AUTHORITY

ACCEPTED BY DISTRICT

PROJECT ENGINEER DATE

PROJECT NAME AND SHEET DESCRIPTION:

SAN FRANCISQUITO CREEK FLOOD REDUCTION, ECOSYSTEM RESTORATION, & RECREATION PROJECT

PLANTING PLAN
C-LINE STATION 19+50 TO 29+50

SCALE	PROJECT NUMBER
1" = 40'	26284002
VERIFY SCALES: 0 — 1" BAR IS ONE INCH ON ORIGINAL DRAWING IF NOT ONE INCH ON THIS SHEET, ADJUST SCALES ACCORDINGLY	SHEET CODE: L-2
	SHEET NUMBER: 98 OF 126

USERNAME: BillShad Tue 08 Jul 2008 09:32am
FILENAME: C:\pwworking\sac\d0171341\L1-L8(CF)
DOCUMENT NUMBER: SFC_LP-C-1028-XXXXXXX

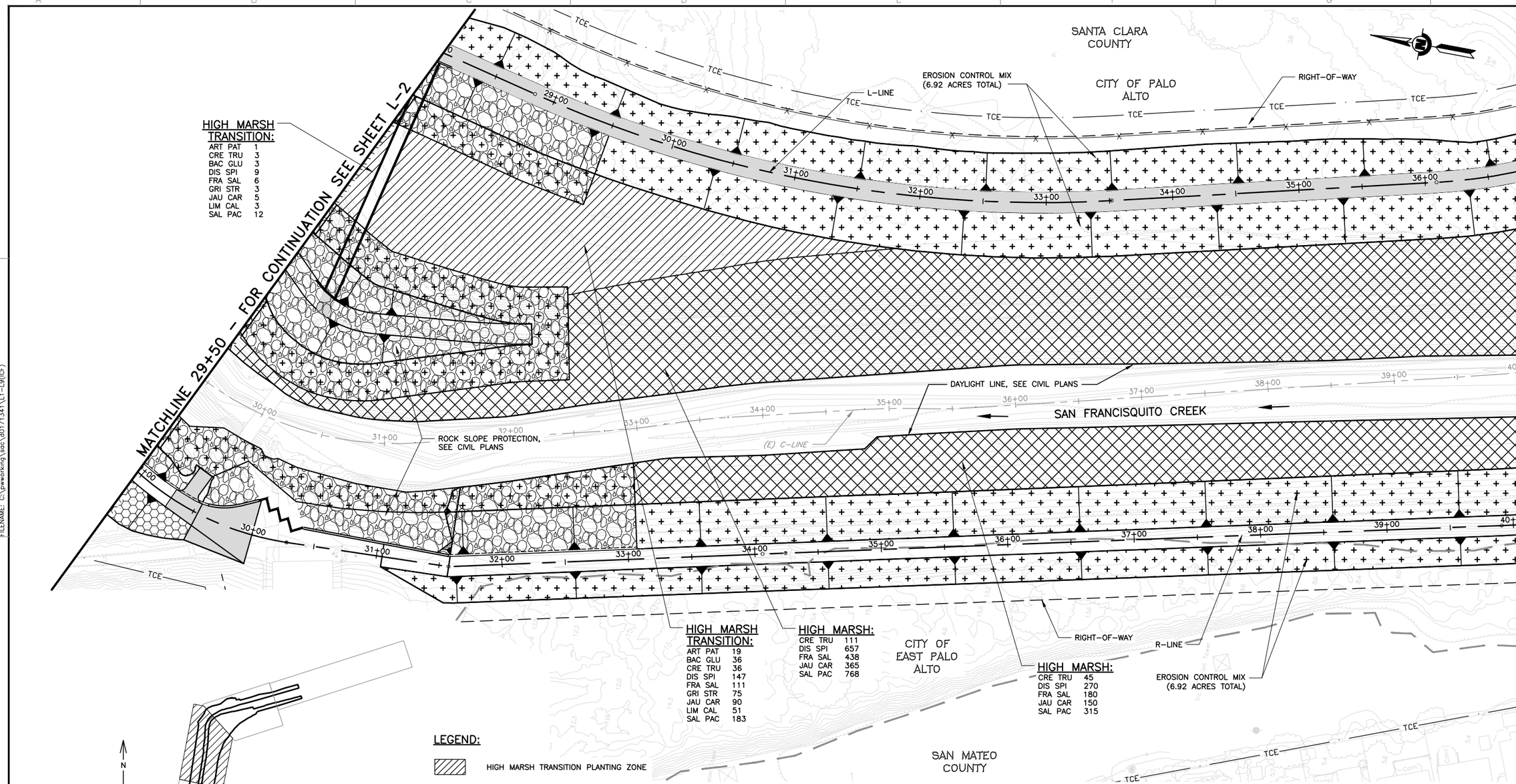

LEGEND:

- HIGH MARSH TRANSITION PLANTING ZONE
- HIGH MARSH PLANTING ZONE
- HIGH MARSH TRANSITION SEED MIX
- EROSION CONTROL SEED MIX
- ROCK SLOPE PROTECTION

SHEET NOTES:

1. SEE SHEET L-8 AND L-9 FOR PLANTING PALETTE AND DETAILS.
2. HIGH MARSH AND HIGH MARSH TRANSITION PLANT QUANTITIES ARE SHOWN PER SHEET (L-1 TO L-7).

REV	DESCRIPTION	DATE	APPR.

HDR

DATE	JULY 2015
DESIGN	M. CLARKE
DRAWN	H. SUAREZ
CHECKED	H. HABIG

ENGINEERING CERTIFICATION

LICENSED LANDSCAPE ARCHITECT — HAROLD HABIG LIC. # 4238 — Signature — October 31, 2016 Renewal Date — Date — STATE OF CALIFORNIA

PROJECT ENGINEER DATE

SAN FRANCISQUITO CREEK JOINT POWERS AUTHORITY

ACCEPTED BY DISTRICT

PROJECT ENGINEER DATE

PROJECT NAME AND SHEET DESCRIPTION:

SAN FRANCISQUITO CREEK FLOOD REDUCTION, ECOSYSTEM RESTORATION, & RECREATION PROJECT

PLANTING PLAN
C-LINE STATION 29+50 TO 40+00

SCALE: 1" = 40'

VERIFY SCALES: 0 — 1" BAR IS ONE INCH ON ORIGINAL DRAWING IF NOT ONE INCH ON THIS SHEET, ADJUST SCALES ACCORDINGLY

PROJECT NUMBER: 26284002

SHEET CODE: L-3

SHEET NUMBER: 99 OF 126

DOCUMENT NUMBER: SFC_LP-C-1028-XXXXXXX

USERNAME: BillShad Tue 08 Jul 2008 09:32am
FILENAME: C:\pwworking\sac\d0171341\L1-L8(CF)

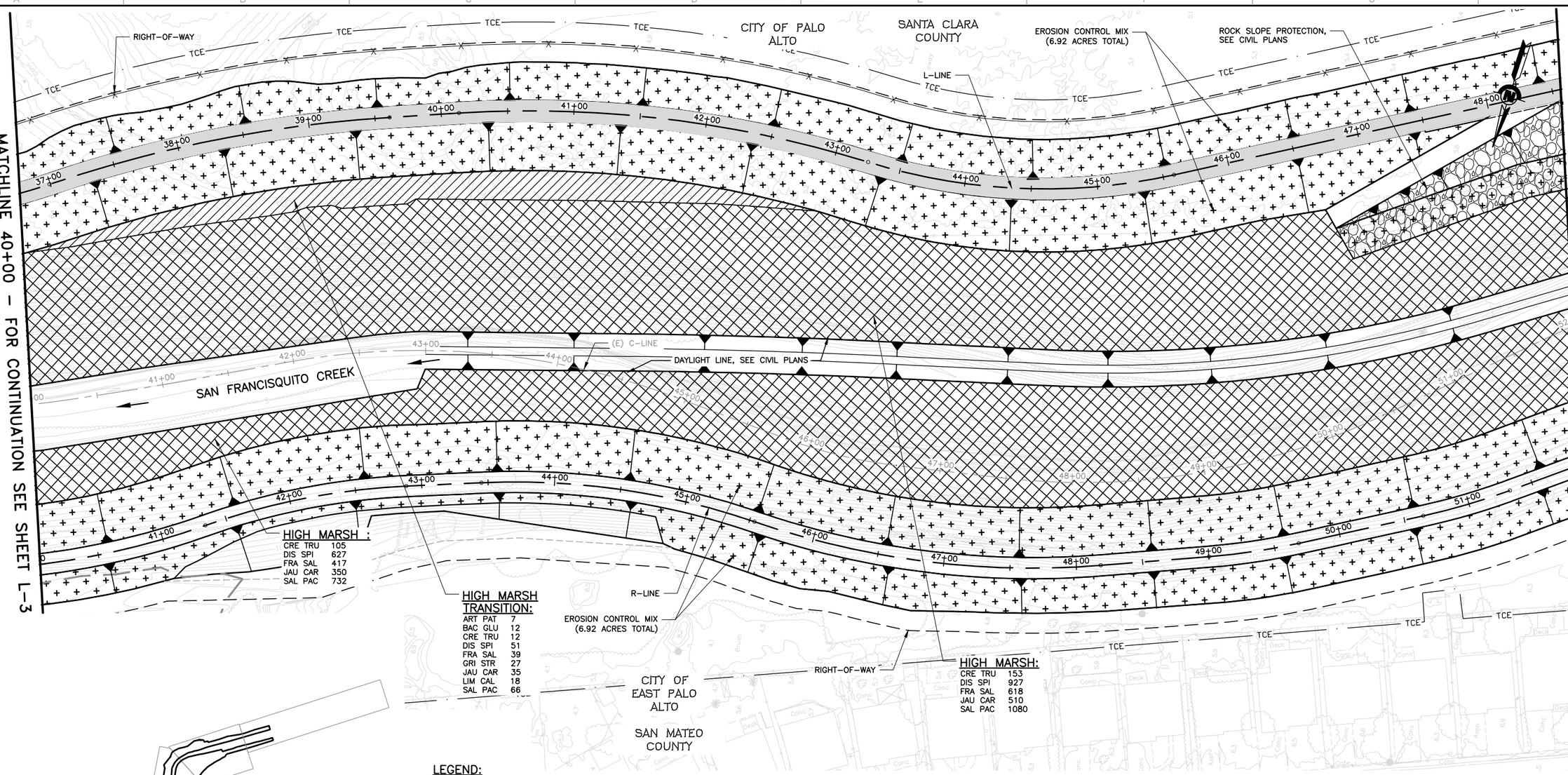

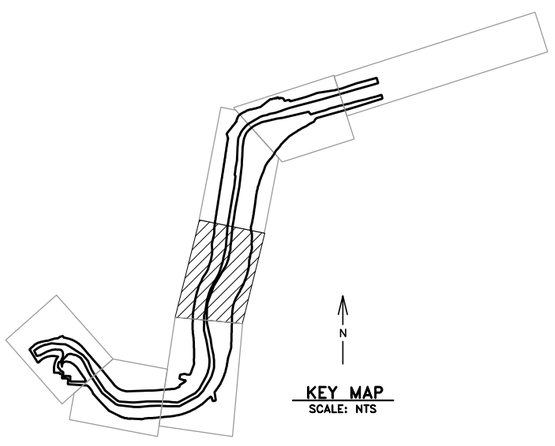

KEY MAP
SCALE: NTS

LEGEND:

- HIGH MARSH TRANSITION PLANTING ZONE
- HIGH MARSH PLANTING ZONE
- HIGH MARSH TRANSITION SEED MIX
- EROSION CONTROL SEED MIX
- ROCK SLOPE PROTECTION

SHEET NOTES:

1. SEE SHEET L-8 AND L-9 FOR PLANTING PALETTE AND DETAILS.
2. HIGH MARSH AND HIGH MARSH TRANSITION PLANT QUANTITIES ARE SHOWN PER SHEET (L-1 TO L-7).

REV	DESCRIPTION	DATE	APPR.

HDR

DATE: JULY 2015
DESIGN: M. CLARKE
DRAWN: H. SUAREZ
CHECKED: H. HABIG

ENGINEERING CERTIFICATION
LICENSED LANDSCAPE ARCHITECT — HENRY HABIG LIC. #4908 — Date of Signature: October 31, 2008 — Renewal Date — Date — STATE OF CALIFORNIA
PROJECT ENGINEER DATE

SAN FRANCISQUITO CREEK JOINT POWERS AUTHORITY
ACCEPTED BY DISTRICT
PROJECT ENGINEER DATE

PROJECT NAME AND SHEET DESCRIPTION:
SAN FRANCISQUITO CREEK FLOOD REDUCTION, ECOSYSTEM RESTORATION, & RECREATION PROJECT
PLANTING PLAN
C-LINE STATION 40+00 TO 52+00

SCALE: 1" = 40'
VERIFY SCALES: 0 — 1"
BAR IS ONE INCH ON ORIGINAL DRAWING IF NOT ONE INCH ON THIS SHEET, ADJUST SCALES ACCORDINGLY

PROJECT NUMBER: 26284002
SHEET CODE: L-4
SHEET NUMBER: 100 OF 126

DOCUMENT NUMBER: SFC_LP-C-1028-XXXXXXX

USERNAME: BillShad Tue 08 Jul 2008 09:32am
FILENAME: C:\pwworking\sac\d0171341\L1-L8(CF)

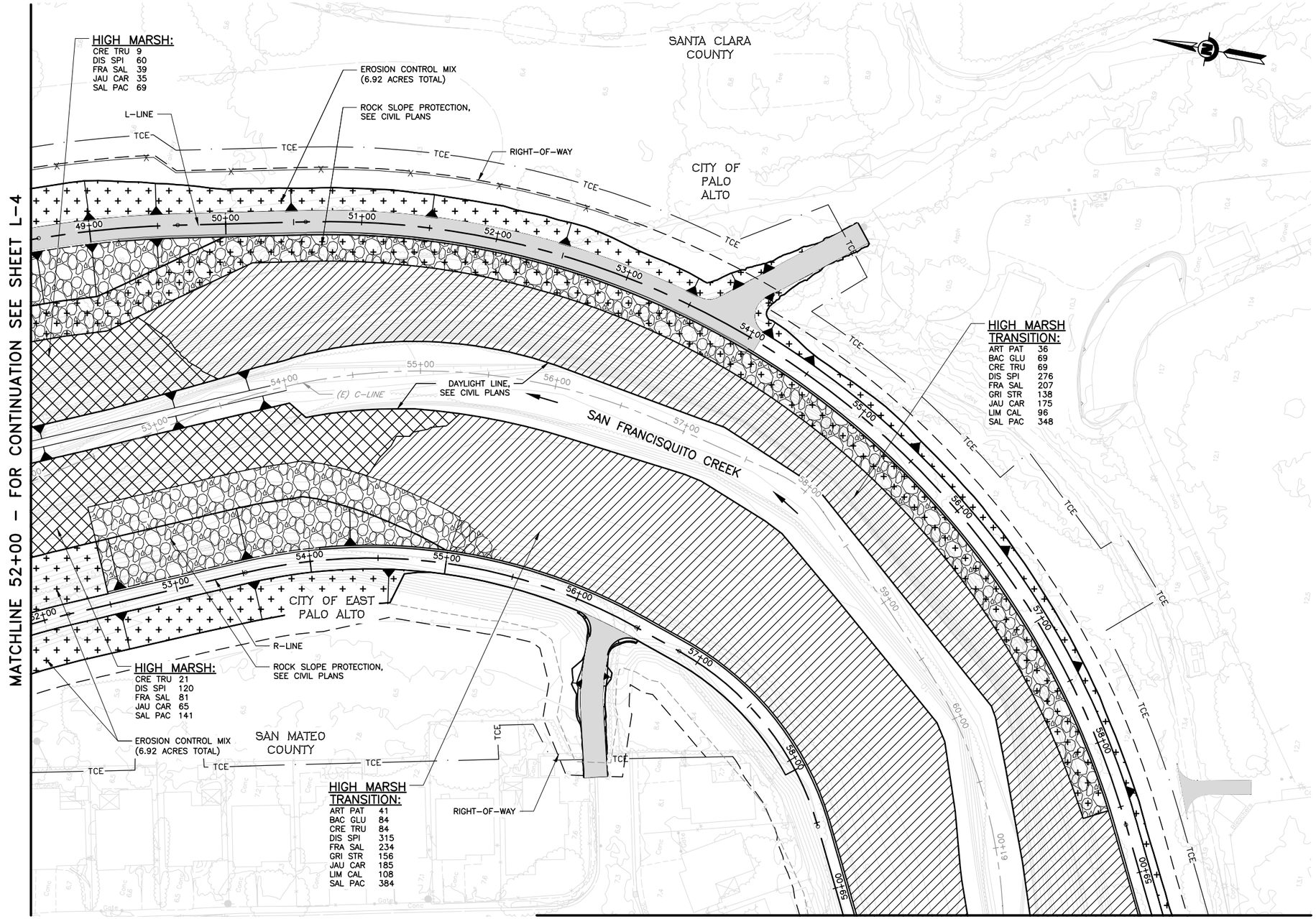

LEGEND:

- HIGH MARSH TRANSITION PLANTING ZONE
- HIGH MARSH PLANTING ZONE
- HIGH MARSH TRANSITION SEED MIX
- EROSION CONTROL SEED MIX
- ROCK SLOPE PROTECTION

SHEET NOTES:

1. SEE SHEET L-8 AND L-9 FOR PLANTING PALETTE AND DETAILS.
2. HIGH MARSH AND HIGH MARSH TRANSITION PLANT QUANTITIES ARE SHOWN PER SHEET (L-1 TO L-7).

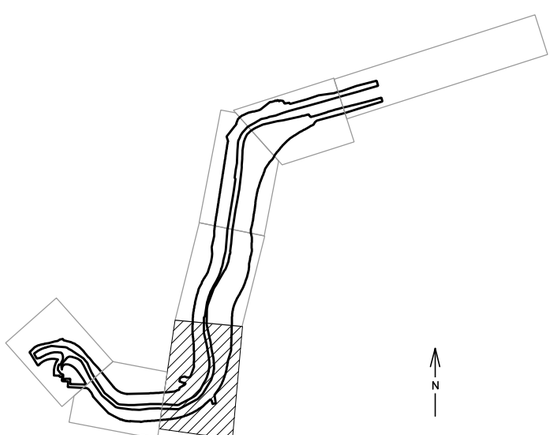

KEY MAP
SCALE: NTS

USERNAME: BillShad Tue 08 Jul 2008 09:32am
FILENAME: C:\pwworking\sac\d0171341\L1-L8(CF)

DOCUMENT NUMBER:SFC_LP-C-1028-XXXXXX

REV	DESCRIPTION	DATE	APPR.

HDR

DATE JULY 2015
DESIGN M. CLARKE
DRAWN H. SUAREZ
CHECKED H. HABIG

ENGINEERING CERTIFICATION
LICENSED LANDSCAPE ARCHITECT HEARTH HABIG LIC. 2608 STATE OF CALIFORNIA
Expiration October 31, 2010
Renewal Date
Date
PROJECT ENGINEER DATE

SAN FRANCISQUITO CREEK
JOINT POWERS AUTHORITY
ACCEPTED BY DISTRICT
PROJECT ENGINEER DATE

PROJECT NAME AND SHEET DESCRIPTION:
SAN FRANCISQUITO CREEK FLOOD REDUCTION, ECOSYSTEM RESTORATION, & RECREATION PROJECT
PLANTING PLAN
C-LINE STATION 52+00 TO 61+50

SCALE 1" = 40'
VERIFY SCALES 0 1"
BAR IS ONE INCH ON ORIGINAL DRAWING IF NOT ONE INCH ON THIS SHEET, ADJUST SCALES ACCORDINGLY

PROJECT NUMBER 26284002
SHEET CODE: L-5
SHEET NUMBER: 101 OF 126

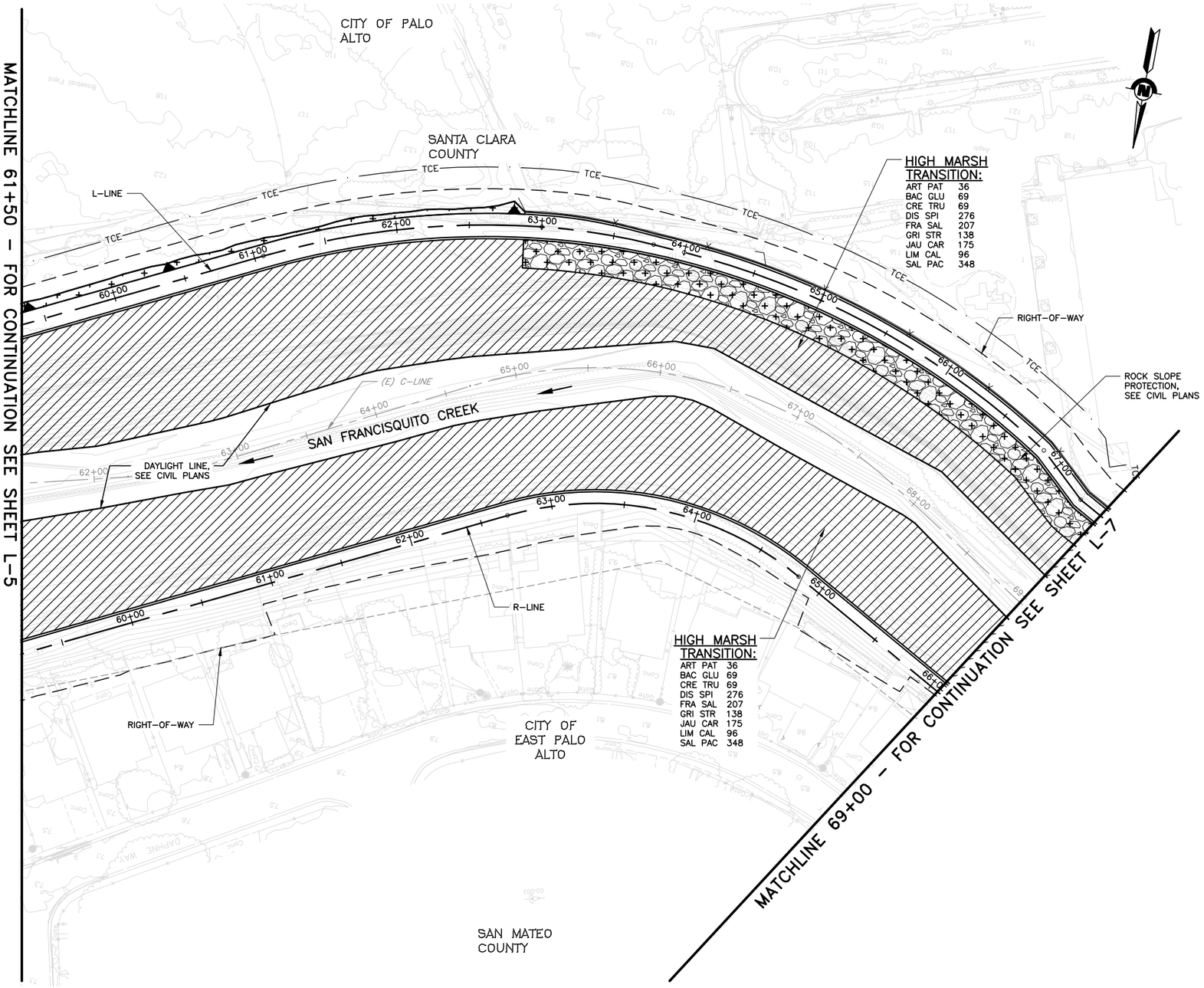

LEGEND:

- HIGH MARSH TRANSITION PLANTING ZONE
- HIGH MARSH PLANTING ZONE
- HIGH MARSH TRANSITION SEED MIX
- EROSION CONTROL SEED MIX
- ROCK SLOPE PROTECTION

SHEET NOTES:

1. SEE SHEET L-8 AND L-9 FOR PLANTING PALETTE AND DETAILS.
2. HIGH MARSH AND HIGH MARSH TRANSITION PLANT QUANTITIES ARE SHOWN PER SHEET (L-1 TO L-7).

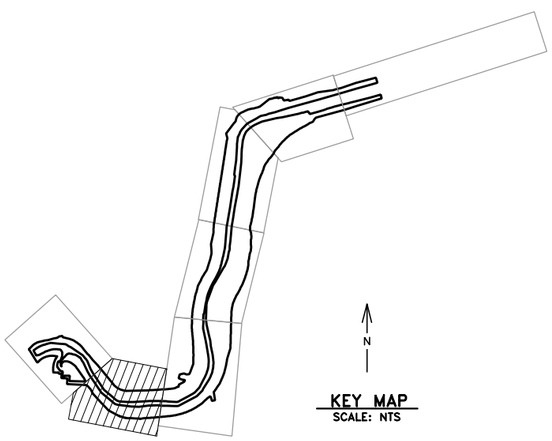

KEY MAP
SCALE: NTS

USERNAME: BillShad Tue 08 Jul 2008 09:32am
FILENAME: C:\pwworking\sac\d0171341\L1-L8(CF)

DOCUMENT NUMBER: SFC_LP-C-1028-XXXXXXX

REV	DESCRIPTION	DATE	APPR.

HDR

DATE	ENGINEERING CERTIFICATION
JULY 2015	LICENSED LANDSCAPE ARCHITECT HEARD HABIG LIC. # 3208 Signature October 31, 2010 Renewal Date Date STATE OF CALIFORNIA
DESIGN M. CLARKE	
DRAWN H. SUAREZ	
CHECKED H. HABIG	PROJECT ENGINEER DATE

SAN FRANCISQUITO CREEK JOINT POWERS AUTHORITY

ACCEPTED BY DISTRICT

PROJECT ENGINEER DATE

PROJECT NAME AND SHEET DESCRIPTION:

SAN FRANCISQUITO CREEK FLOOD REDUCTION, ECOSYSTEM RESTORATION, & RECREATION PROJECT

PLANTING PLAN
C-LINE STATION 61+50 TO 69+00

SCALE	PROJECT NUMBER
1" = 40'	26284002
VERIFY SCALES 0 1" BAR IS ONE INCH ON ORIGINAL DRAWING IF NOT ONE INCH ON THIS SHEET, ADJUST SCALES ACCORDINGLY	SHEET CODE: L-6
	SHEET NUMBER: 102 OF 126

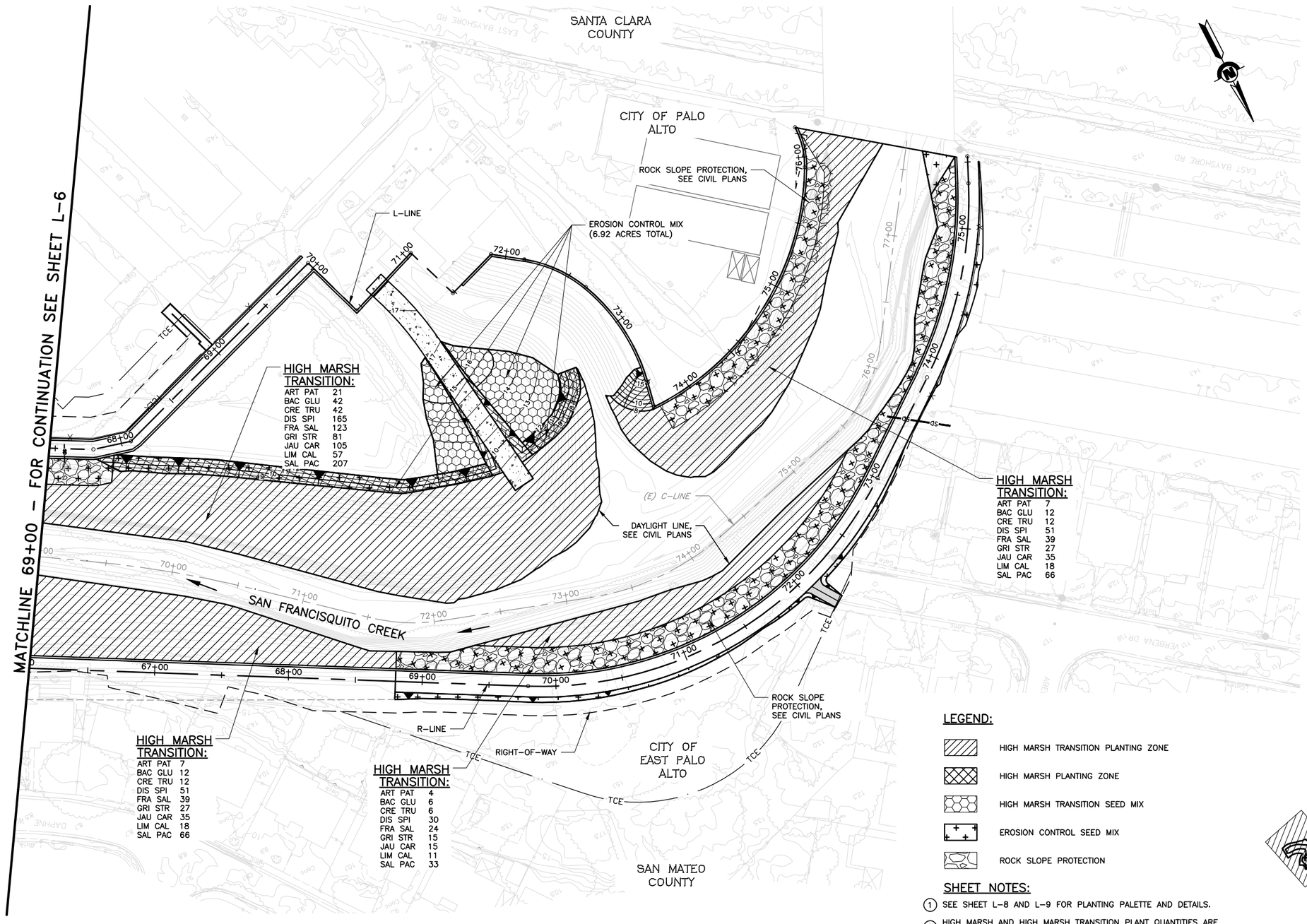

LEGEND:

- HIGH MARSH TRANSITION PLANTING ZONE
- HIGH MARSH PLANTING ZONE
- HIGH MARSH TRANSITION SEED MIX
- EROSION CONTROL SEED MIX
- ROCK SLOPE PROTECTION

SHEET NOTES:

1. SEE SHEET L-8 AND L-9 FOR PLANTING PALETTE AND DETAILS.
2. HIGH MARSH AND HIGH MARSH TRANSITION PLANT QUANTITIES ARE SHOWN PER SHEET (L-1 TO L-7).

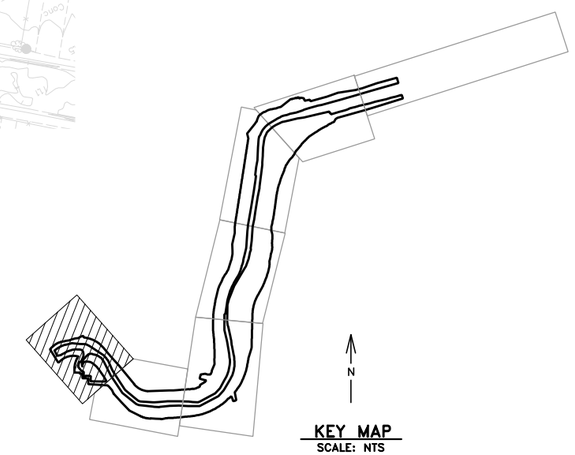

KEY MAP
SCALE: NTS

REV	DESCRIPTION	DATE	APPR.

HDR

DATE: JULY 2015
DESIGN: M. CLARKE
DRAWN: H. SUAREZ
CHECKED: H. HABIG

ENGINEERING CERTIFICATION
LICENSED LANDSCAPE ARCHITECT — HEATH HABIG — STATE OF CALIFORNIA — Expiration October 31, 2016 — Renewal Date — Date
PROJECT ENGINEER DATE

SAN FRANCISQUITO CREEK JOINT POWERS AUTHORITY
ACCEPTED BY DISTRICT
PROJECT ENGINEER DATE

PROJECT NAME AND SHEET DESCRIPTION:
SAN FRANCISQUITO CREEK FLOOD REDUCTION, ECOSYSTEM RESTORATION, & RECREATION PROJECT
PLANTING PLAN STATION 69+00 TO 77+66

SCALE: 1" = 40'
VERIFY SCALES: 0 — 1"
BAR IS ONE INCH ON ORIGINAL DRAWING IF NOT ONE INCH ON THIS SHEET, ADJUST SCALES ACCORDINGLY

PROJECT NUMBER: 26284002
SHEET CODE: L-7
SHEET NUMBER: 103 OF 126

DOCUMENT NUMBER: SFC_LP-C-1028-XXXXXX

USERNAME: BillShad Tue 08 Jul 2008 09:32am
FILENAME: C:\pwworking\sac\d0171341\L1-L8(CF)

GENERAL PLANTING NOTES:

1. SEE TECHNICAL SPECIFICATIONS AND GENERAL NOTES FOR ADDITIONAL INFORMATION TO CONSIDER IN PLANTING INSTALLATION INCLUDING INFRASTRUCTURE AND UTILITIES PROTECTION AND REPAIR INFORMATION.
2. ALL SEED AND CONTAINER PLANT MATERIAL WILL BE SUPPLIED BY THE DISTRICT, FINAL SPECIES AND INDIVIDUAL QUANTITIES MAY VARY FROM PLANS BASED ON AVAILABILITY, TOTAL QUANTITIES WILL REMAIN THE SAME.
3. THE CONTRACTOR SHALL INSTALL ALL PLANTS SHOWN DIAGRAMMATICALLY ON THE DRAWINGS.
4. APPLY A TOPICAL SYSTEMIC HERBICIDE WHERE WEEDS ARE PRESENT PER MANUFACTURER'S SPECIFICATIONS AND THE DIRECTION OF THE ENGINEER A MINIMUM OF TEN DAYS PRIOR TO COMMENCEMENT OF ANY PLANTING WORK. WEEDS AND TREES INCLUDING THEIR ROOTS SHALL BE ALLOWED TO COMPLETELY DIE BACK BEFORE PROCEEDING WITH WORK.
5. ALL TREES AND STUMPS DESIGNATED FOR REMOVAL MUST BE CLEARED AND REMOVED FROM THE SITE PRIOR TO PLANTING OR SEEDING.
6. PROTECT ALL EXISTING PLANT MATERIAL TO REMAIN, INCLUDING ANY INDICATED TREES. THE CONTRACTOR SHALL REPLACE, AT NO COST TO OWNER, PLANT MATERIAL INDICATED AS EXISTING ON PLANS THAT IS DAMAGED OR ALLOWED TO DIE AS A RESULT OF THE NEGLIGENCE OF THE CONTRACTOR.
7. PROTECTION FENCING SHALL BE IN PLACE PRIOR TO PLANTING.
8. CONTRACTOR SHALL MAINTAIN ALL PLANTING WORK FOR A PERIOD OF 3 CONTINUOUS CALENDAR YEARS (ESTABLISHMENT MAINTENANCE). THE 3-YEAR MAINTENANCE PERIOD SHALL BEGIN IMMEDIATELY FOLLOWING THE FINAL ACCEPTANCE OF THE INSTALLATION.
9. ALL CONTAINER PLANTS MUST BE PLANTED WITHIN 3 WORKING DAYS FOLLOWING DELIVERY TO THE SITE. THE CONTRACTOR SHALL BE RESPONSIBLE FOR WATERING AND PROTECTING ALL PLANTS AND MATERIALS STORED ON-SITE.
10. THE ENGINEER SHALL FLAG ALL CONTAINER PLANT LOCATIONS PRIOR TO EXCAVATING PLANTING HOLES FOR APPROVAL BY THE ENGINEER.
11. PLANTING AND SEEDING SHALL ONLY OCCUR WHEN ENVIRONMENTAL CONDITIONS ARE FAVORABLE FOR SUCH ACTIVITIES, BASED ON STANDARD HORTICULTURAL PRACTICES. PLANTING OR SEEDING SHALL NOT TAKE PLACE IF TEMPERATURES ARE UNSEASONABLY HIGH OR IF THE SITE IS EXCESSIVELY WET OR MUDDY.
12. CONTAINER PLANTS SHALL BE PLANTED PER DETAIL(S), AND SHALL BE WATERED IN THOROUGHLY IMMEDIATELY AFTER BEING PLANTED.
13. SEEDING SHALL OCCUR ONLY AFTER THE ENGINEER HAS OBSERVED AND APPROVED THAT THE SITE HAS BEEN PROPERLY PREPARED.
14. SEEDING SHALL BE APPLIED AS INDICATED ON THE DRAWINGS AND SPECIFICATIONS.

PLANTING PROGRAM NOTES:

1. INDIVIDUAL PLANTS AND CLUSTERS SHALL BE RANDOMLY PLACED AT VARIOUS ON-CENTER SPACINGS, AVERAGE SPACING IS PROVIDED FOR QUANTITY CALCULATION PURPOSES ONLY.
2. PLANT LOCATIONS SHALL BE STAKED BY THE ENGINEER PRIOR TO PLANT INSTALLATION.
3. TREEBAND CONTAINER SIZE SHALL BE 2.25 INCHES SQ. X 5 INCHES LONG.
4. 1-GALLON CONTAINER SIZE SHALL BE 6 INCHES DIA. X 7 INCHES LONG.
5. ALL PLANTING AREAS AND DISTURBED AREAS SHALL BE HYDROSEEDED WITH EROSION CONTROL SEED MIX PER SPECIFICATIONS.
6. HYDROSEED SHALL BE PLACED PRIOR TO TURF REINFORCEMENT MAT SHOWN ON SHEET L-7.

RESTORATION PLANTING PROGRAM

SYMBOL	PLANTING ZONE	PLANTING ZONE	PLANT CODE SHOWN ON PLAN SHEETS	SPECIES NAME		AVERAGE PLANT SPACING (FEET ON CENTER)	PERCENTAGE OF PLANT PALETTE	CONTAINER PLANT		PLANTING NOTES
				BOTANICAL NAME	COMMON NAME			SIZE	QUANTITY	
	HIGH MARSH TRANSITION (ABOVE ELEV. 7)	1/L-9	ATR PAT	ATRIPLEX PATULA	FAT HEN	8' O.C.	5	TREEBAND	226	
		1/L-9 & 2/L-9	BAC GLU	BACCHARIS GLUTINOSA	MARSH BACCHARIS	2' O.C. WITHIN CLUSTERS, 10' O.C. BETWEEN CLUSTERS	5		435	PLANT IN CLUSTERS OF 3
			CRE TRU	CRESSA TRUXILLENSIS	ALKALI WEED	2' O.C. WITHIN CLUSTERS, 10' O.C. BETWEEN CLUSTERS	5		435	PLANT IN CLUSTERS OF 3
			DIS SPI	DISTICHLIS SPICATA	SALT GRASS	2' O.C. WITHIN CLUSTERS, 10' O.C. BETWEEN CLUSTERS	20		1734	PLANT IN CLUSTERS OF 3
			FRA SAL	FRANKENIA SALINA	ALKALI HEATH	2' O.C. WITHIN CLUSTERS, 10' O.C. BETWEEN CLUSTERS	15		1302	PLANT IN CLUSTERS OF 3
			GRI STR	GRINDELIA STRICTA	GUMWEED	2' O.C. WITHIN CLUSTERS, 10' O.C. BETWEEN CLUSTERS	10		867	PLANT IN CLUSTERS OF 3
		1/L-9 & 2/L-9	JAU CAR	JAUMEA CARNOSA	MARSH JAUMEA	2' O.C. WITHIN CLUSTERS, 10' O.C. BETWEEN CLUSTERS	7.5		1085	PLANT IN CLUSTERS OF 5
		1/L-9	LIM CAL	LIMONIUM CALIFORNICUM	WESTERN MARSH ROSEMARY	6' O.C.	7.5		602	
		1/L-9 & 2/L-9	SAL PAC	SALICORNIA PACIFICA	PERENNIAL PICKLEWEED	2' O.C. WITHIN CLUSTERS, 10' O.C. BETWEEN CLUSTERS	25		2169	PLANT IN CLUSTERS OF 3
	HIGH MARSH (BELOW ELEV. 7)	1/L-9 & 2/L-9	CRE TRU	CRESSA TRUXILLENSIS	ALKALI WEED	2' O.C. WITHIN CLUSTERS, 10' O.C. BETWEEN CLUSTERS	5	TREEBAND	498	PLANT IN CLUSTERS OF 3
			DIS SPI	DISTICHLIS SPICATA	SALT GRASS	2' O.C. WITHIN CLUSTERS, 10' O.C. BETWEEN CLUSTERS	30		2991	PLANT IN CLUSTERS OF 3
			FRA SAL	FRANKENIA SALINA	ALKALI HEATH	2' O.C. WITHIN CLUSTERS, 10' O.C. BETWEEN CLUSTERS	20		1992	PLANT IN CLUSTERS OF 3
		1/L-9 & 2/L-9	JAU CAR	JAUMEA CARNOSA	MARSH JAUMEA	2' O.C. WITHIN CLUSTERS, 10' O.C. BETWEEN CLUSTERS	10		1660	PLANT IN CLUSTERS OF 5
			SAL PAC	SALICORNIA PACIFICA	PERENNIAL PICKLEWEED	2' O.C. WITHIN CLUSTERS, 10' O.C. BETWEEN CLUSTERS	35		3489	PLANT IN CLUSTERS OF 3

HIGH MARSH TRANSITION SEED MIX

SYMBOL	PLANTING ZONE	SPECIES NAME		APPLICATION RATE (PLS LBS/ACRE)
		BOTANICAL NAME	COMMON NAME	
	ALL DISTURBED AREAS ON THE RIGHT LEVEE BETWEEN STATION 3+50 AND 30+00	ATRIPLEX PATULA	FAT HEN	1.0
		BACCHARIS GLUTINOSA	MARSH BACCHARIS	0.5
		CRESSA TRUXILLENSIS	ALKALI WEED	0.25
		ELYMUS X TRITICUM	REGREEN HYBRID WHEATGRASS	22
		FRANKENIA SALINA	ALKALI HEATH	0.25
		GRINDELIA STRICTA	GUMWEED	2.0
		HELIOTROPIUM CURASSAVICUM	SALT HELIOTROPE	0.5
		HORDEUM BRACHANTHERUM (SALT-TOLERANT FORM)	MEADOW BARLEY	10.0
		HORDEUM DEPRESSUM (SALT-TOLERANT FORM)	ALKALI BARLEY	8.0
		LIMONIUM CALIFORNICUM	MARSH ROSEMARY	1.0
		SALICORNIA PACIFICA	PICKLEWEED	0.5
			TOTAL	46

EROSION CONTROL SEED MIX

SYMBOL	PLANTING ZONE	SPECIES NAME		APPLICATION RATE (PLS LBS/ACRE)
		BOTANICAL NAME	COMMON NAME	
	ALL EROSION CONTROL AREAS AND ALL OTHER DISTURBED AREAS	BROMUS CARINATUS (SALT-TOLERANT FORM)	CALIFORNIA BROME	12
		ELYMUS GLAUCUS (SALT-TOLERANT FORM)	BLUE WILD RYE	10
		ELYMUS X TRITICUM	REGREEN HYBRID WHEATGRASS	22
		HORDEUM BRACHYANTHERUM (SALT-TOLERANT FORM)	MEADOW BARLEY	8
		HORDEUM DEPRESSUM (SALT-TOLERANT FORM)	ALKALI BARLEY	6
			TOTAL	58

REV	DESCRIPTION	DATE	APPR.

HDR

DATE: JULY 2015
DESIGN: M. CLARKE
DRAWN: H. SUAREZ
CHECKED: H. HABIG

ENGINEERING CERTIFICATION
LICENSED LANDSCAPE ARCHITECT — HEATH D. HABIG LIC. # 3508 — Signature — October 31, 2016 Renewal Date — Date — STATE OF CALIFORNIA
PROJECT ENGINEER DATE

SAN FRANCISQUITO CREEK JOINT POWERS AUTHORITY
ACCEPTED BY DISTRICT
PROJECT ENGINEER DATE

PROJECT NAME AND SHEET DESCRIPTION:
SAN FRANCISQUITO CREEK FLOOD REDUCTION, ECOSYSTEM RESTORATION, & RECREATION PROJECT
PLANTING NOTES & PROGRAM

SCALE: NOT TO SCALE
VERIFY SCALES: 0 1" — BAR IS ONE INCH ON ORIGINAL DRAWING IF NOT ONE INCH ON THIS SHEET, ADJUST SCALES ACCORDINGLY
PROJECT NUMBER: 26284002
SHEET CODE: L-8
SHEET NUMBER: 104 OF 126

DOCUMENT NUMBER: SFC_LP-C-1028-XXXXXXX

USERNAME: BillShad Tue 08 Jul 2008 09:32am
FILENAME: C:\pwworking\sac\d0171341\L1-L8(CF)

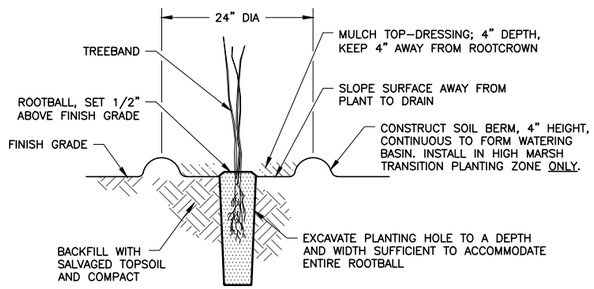

NOTES:

1. PROVIDE WEED FREE ZONE AROUND PLANTING SITE ACCORDING TO THE SPECIFICATIONS.
2. REFER TO DETAIL 2 THIS SHEET FOR CLUSTER PLANTING AND BASIN LAYOUT.
3. REFER TO SPECIFICATIONS AND PLAN SHEETS FOR ADDITIONAL INFORMATION.

DETAIL 1 – TREEBAND CONTAINER PLANTING

NTS

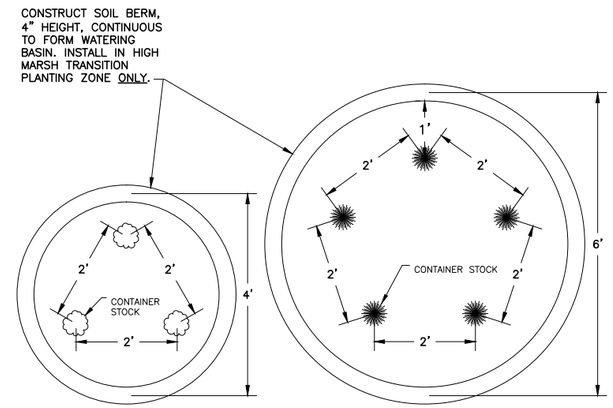

CLUSTERS OF 3

CLUSTERS OF 5

NOTES:

1. PROVIDE WEED FREE ZONE AROUND PLANTING SITE ACCORDING TO THE SPECIFICATIONS.
2. APPLY MULCH TOP-DRESSING TO ALL BASINS, 3" DEPTH, KEEP 4" FROM ROOTCROWNS.
3. PLANT QUANTITIES AND SPACING VARIES BY SPECIES. REFER TO TABLES ABOVE FOR ADDITIONAL INFORMATION.
4. REFER TO SPECIFICATIONS AND PLAN SHEETS FOR ADDITIONAL INFORMATION.

DETAIL 2 – CONTAINER PLANTING IN CLUSTERS

NTS

USERNAME: BillShad Tue 08 Jul 2008 09:32am
FILENAME: C:\pwworking\sac\d0171341\L1-L9(CF)

DOCUMENT NUMBER: SFC_LP-C-1028-XXXXXXX

REV	DESCRIPTION	DATE	APPR.

HDR

DATE: JULY 2015
DESIGN: M. CLARKE
DRAWN: H. SUAREZ
CHECKED: H. HABIG

ENGINEERING CERTIFICATION

LICENSED LANDSCAPE ARCHITECT — HEATH HABIG LIC. NO. 5028 — Expiration Date: October 31, 2010 — Renewal Date — Date — STATE OF CALIFORNIA

PROJECT ENGINEER DATE

SAN FRANCISQUITO CREEK JOINT POWERS AUTHORITY

ACCEPTED BY DISTRICT

PROJECT ENGINEER DATE

PROJECT NAME AND SHEET DESCRIPTION:

SAN FRANCISQUITO CREEK FLOOD REDUCTION, ECOSYSTEM RESTORATION, & RECREATION PROJECT

PLANTING DETAILS

SCALE: NOT TO SCALE

VERIFY SCALES: 0 1" — BAR IS ONE INCH ON ORIGINAL DRAWING IF NOT ONE INCH ON THIS SHEET, ADJUST SCALES ACCORDINGLY

PROJECT NUMBER: 26284002

SHEET CODE: L-9

SHEET NUMBER: 105 OF 126

LEGEND:

TREE SURVEY LOCATION

TREE DEMOLITION TABLE:

NO TREES THIS SHEET

SHEET NOTES:

1. TREE SURVEY LOCATIONS LEFT OF THE ALIGNMENT WILL HAVE A NEGATIVE OFFSET AND RIGHT OF THE ALIGNMENT WILL HAVE A POSITIVE OFFSET.

2. DIAMETER AT BREAST HEIGHT (DBH) WAS RECORDED IN INCHES BY DBH CLASS SIZE AT 4.5 FEET ABOVE GRADE, FOR EACH TRUNK. WHEN A TREE TRUNK FORKED BELOW THE DBH, THE DIAMETER WAS MEASURED AT THE NARROWEST PART OF THE MAIN STEM BELOW THE FORK AND THE LOCATION OF THE MEASUREMENT WAS RECORDED PER STANDARD ARBORICULTURE PROCEDURE. DBH CLASS SIZES INCLUDE:

0. UNKNOWN DBH	5. 25 TO 30 INCHES DBH
1. 2 TO 6 INCHES DBH	6. 31 TO 36 INCHES DBH
2. 7 TO 12 INCHES DBH	7. 37 TO 42 INCHES DBH
3. 13 TO 18 INCHES DBH	8. GREATER THAN 42" DBH
4. 19 TO 24 INCHES DBH	

3. MANAGEMENT REQUIREMENTS:
   1. REMOVE – AS A RESULT OF CONSTRUCTION ACTIVITIES AND/OR DUE TO EXTREME OR MAJOR PROBLEMS.
   2. PROTECT – RETAIN AND PREVENT DAMAGE.
   3. INSPECT – TREE WITH QUESTIONABLE HEALTH THAT MAY REQUIRE ADDITIONAL EVALUATION.

4. ONLY TREES DESIGNATED FOR REMOVAL ARE TO BE REMOVED. ALL OTHER TREES ARE TO REMAIN AND SHALL BE PROTECTED UNLESS DIRECTED OTHERWISE BY THE ENGINEER.

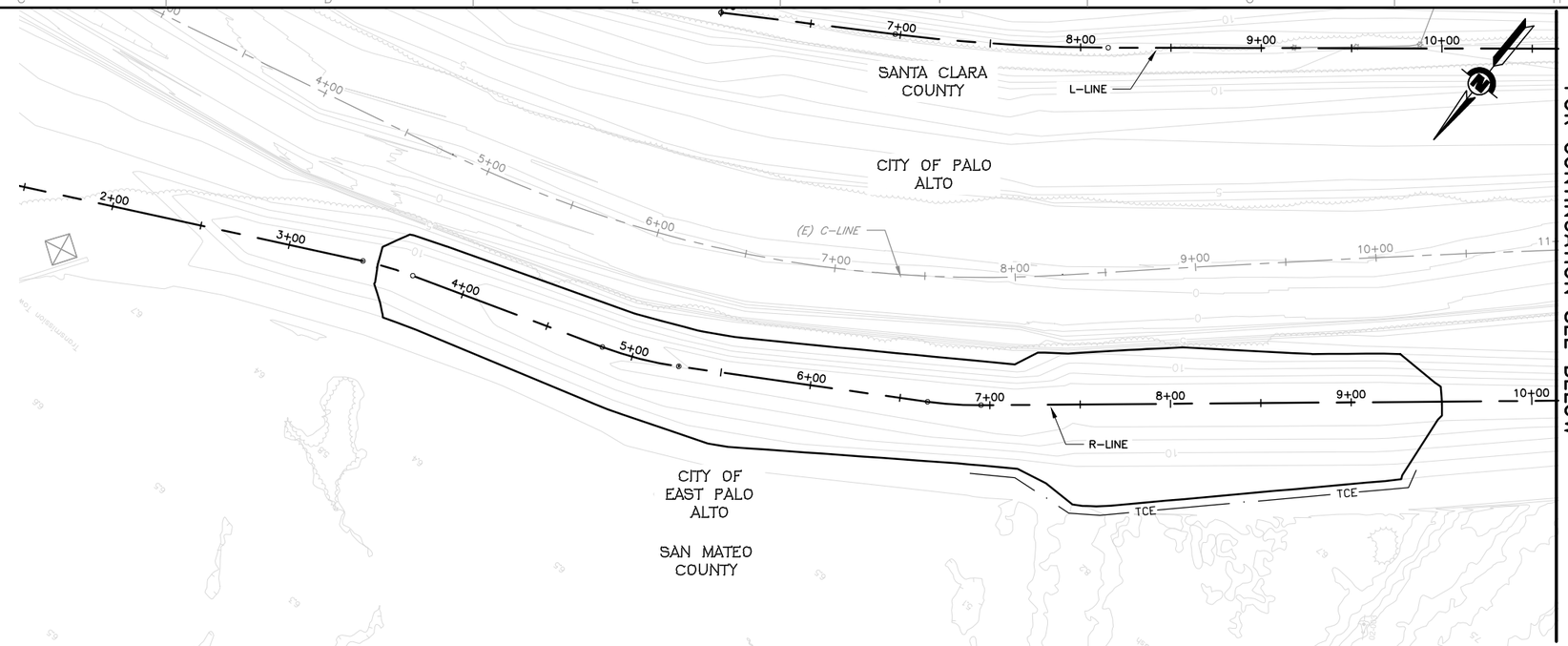

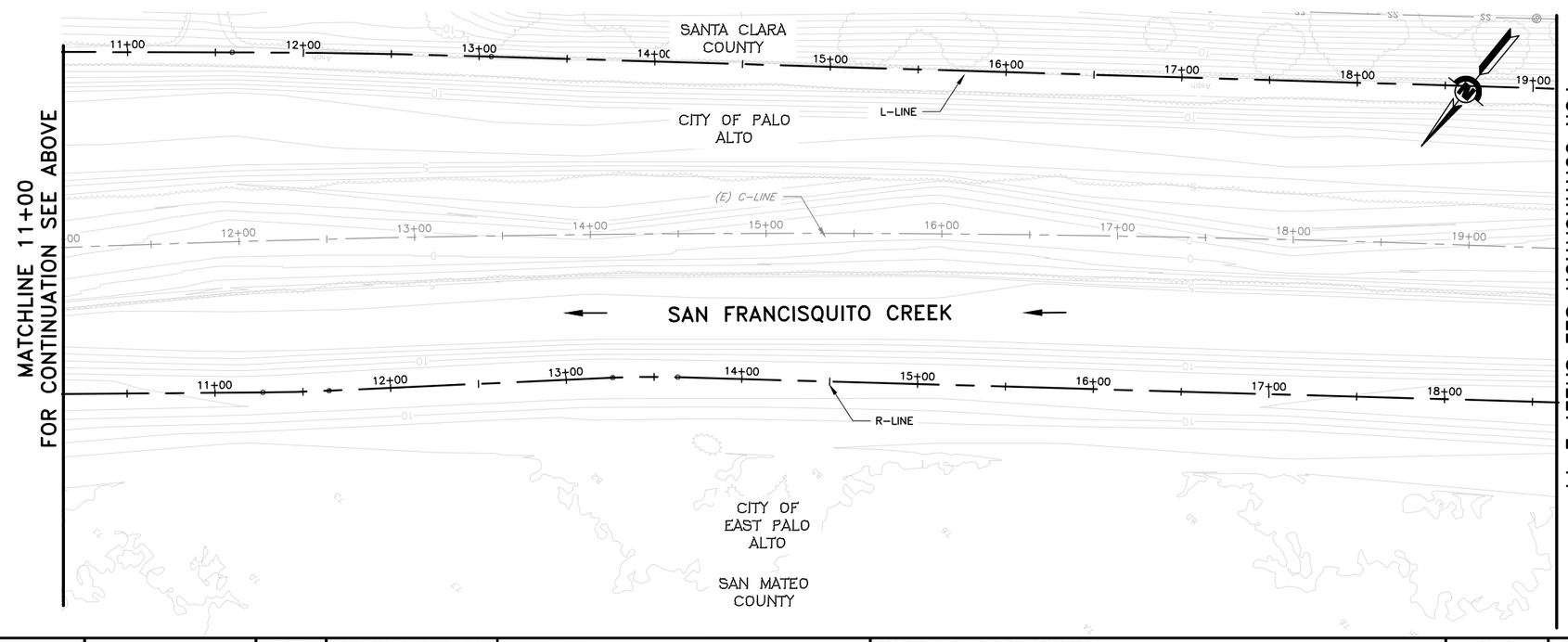

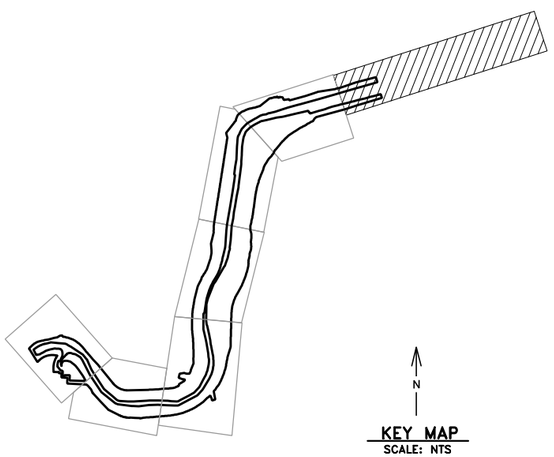

KEY MAP
SCALE: NTS

REV	DESCRIPTION	DATE	APPR.

HDR

DATE	JULY 2015
DESIGN	M. CLARKE
DRAWN	H. SUAREZ
CHECKED	H. HABIG

ENGINEERING CERTIFICATION
LICENSED LANDSCAPE ARCHITECT — HABIG, HEIDI D. — STATE OF CALIFORNIA
Signature
October 31, 2016
Renewal Date
Date
PROJECT ENGINEER DATE

SAN FRANCISQUITO CREEK
JOINT POWERS AUTHORITY

ACCEPTED BY DISTRICT
PROJECT ENGINEER DATE

PROJECT NAME AND SHEET DESCRIPTION:

SAN FRANCISQUITO CREEK FLOOD REDUCTION, ECOSYSTEM RESTORATION, & RECREATION PROJECT

TREE DEMOLITION PLAN
C-LINE STATION 1+50 TO 19+50

SCALE	PROJECT NUMBER
1" = 40'	26284002
VERIFY SCALES 0 1" BAR IS ONE INCH ON ORIGINAL DRAWING IF NOT ONE INCH ON THIS SHEET, ADJUST SCALES ACCORDINGLY	SHEET CODE: L-10
	SHEET NUMBER: 106 OF 126

DOCUMENT NUMBER: SFC_LP-C-1028-XXXXXXX

USERNAME: BillShad Tue 08 Jul 2008 09:32am
FILENAME: C:\pwworking\sac\d0171341\L10-L19(CF)

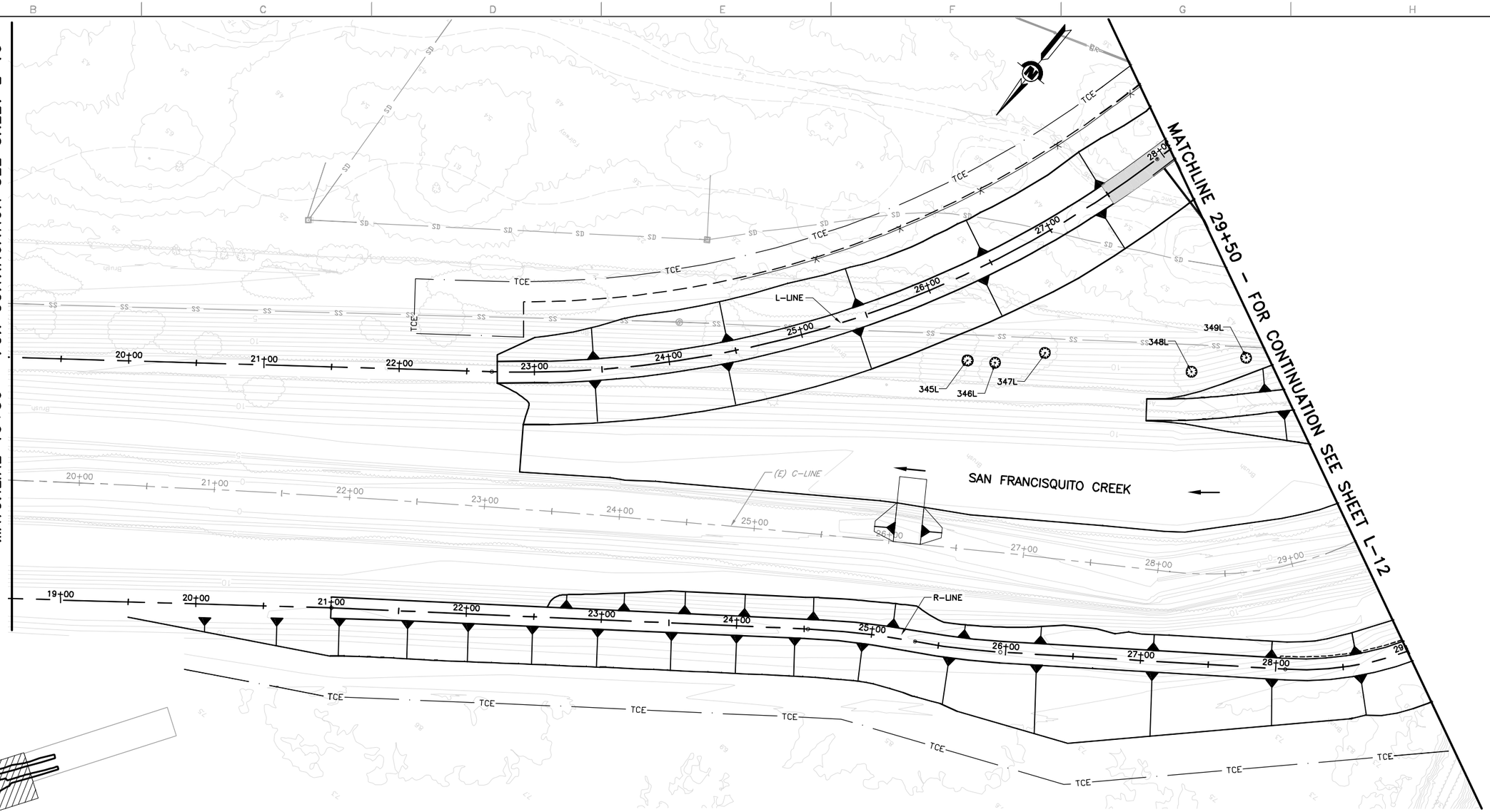

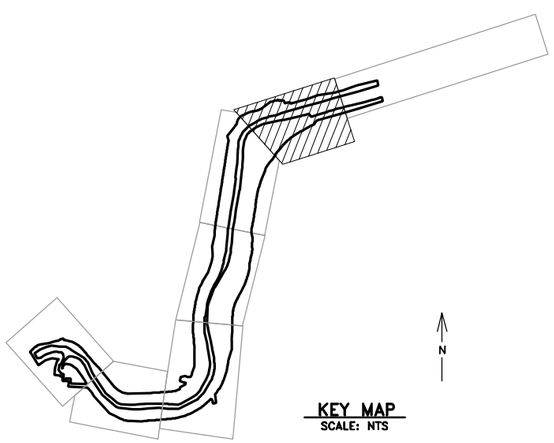

KEY MAP
SCALE: NTS

LEGEND:

⊗ TREE SURVEY LOCATION

TREE DEMOLITION TABLE:

TREE SURVEY ID	COMMON NAME	DBH CLASS SIZE	EASTING	NORTHING	ALIGNMENT	STATION	OFFSET (FEET)	TREE MANAGEMENT RECOMMENDATION
345L	ITALIAN STONE PINE	4	6090707.81	1994585.81	LEFT LEVEE	26+05.59	58.60	REMOVE
346L	BAILEY'S ACACIA	4	6090691.00	1994574.28	LEFT LEVEE	26+22.12	68.37	REMOVE
347L	RIVER SHEOAK	3	6090667.09	1994545.30	LEFT LEVEE	26+55.38	77.73	REMOVE
348L	MONTEREY PINE	4	6090574.39	1994487.47	LEFT LEVEE	27+31.76	143.58	REMOVE
349L	RIVER SHEOAK	4	6090549.61	1994454.02	LEFT LEVEE	27+64.61	157.50	REMOVE

SHEET NOTES:

1. TREE SURVEY LOCATIONS LEFT OF THE ALIGNMENT WILL HAVE A NEGATIVE OFFSET AND RIGHT OF THE ALIGNMENT WILL HAVE A POSITIVE OFFSET.

2. DIAMETER AT BREAST HEIGHT (DBH) WAS RECORDED IN INCHES BY DBH CLASS SIZE AT 4.5 FEET ABOVE GRADE, FOR EACH TRUNK. WHEN A TREE TRUNK FORKED BELOW THE DBH, THE DIAMETER WAS MEASURED AT THE NARROWEST PART OF THE MAIN STEM BELOW THE FORK AND THE LOCATION OF THE MEASUREMENT WAS RECORDED PER STANDARD ARBORICULTURE PROCEDURE. DBH CLASS SIZES INCLUDE:

   0. UNKNOWN DBH
   1. 2 TO 6 INCHES DBH
   2. 7 TO 12 INCHES DBH
   3. 13 TO 18 INCHES DBH
   4. 19 TO 24 INCHES DBH
   5. 25 TO 30 INCHES DBH
   6. 31 TO 36 INCHES DBH
   7. 37 TO 42 INCHES DBH
   8. GREATER THAN 42" DBH

3. MANAGEMENT REQUIREMENTS:
   1. REMOVE – AS A RESULT OF CONSTRUCTION ACTIVITIES AND/OR DUE TO EXTREME OR MAJOR PROBLEMS.
   2. PROTECT – RETAIN AND PREVENT DAMAGE.
   3. INSPECT – TREE WITH QUESTIONABLE HEALTH THAT MAY REQUIRE ADDITIONAL EVALUATION.

4. ONLY TREES DESIGNATED FOR REMOVAL ARE TO BE REMOVED. ALL OTHER TREES ARE TO REMAIN AND SHALL BE PROTECTED UNLESS DIRECTED OTHERWISE BY THE ENGINEER.

REV	DESCRIPTION	DATE	APPR.

HDR

DATE: JULY 2015
DESIGN: M. CLARKE
DRAWN: H. SUAREZ
CHECKED: H. HABIG

ENGINEERING CERTIFICATION
LICENSED LANDSCAPE ARCHITECT — HEINRICH HABIG — STATE OF CALIFORNIA
Signature
October 31, 2015
Renewal Date
Date
PROJECT ENGINEER DATE

SAN FRANCISQUITO CREEK
JOINT POWERS AUTHORITY
ACCEPTED BY DISTRICT
PROJECT ENGINEER DATE

PROJECT NAME AND SHEET DESCRIPTION:

SAN FRANCISQUITO CREEK FLOOD REDUCTION, ECOSYSTEM RESTORATION, & RECREATION PROJECT

TREE DEMOLITION PLAN
C-LINE STATION 19+50 TO 29+50

SCALE: 1" = 40'
VERIFY SCALES: 0 — 1"
BAR IS ONE INCH ON ORIGINAL DRAWING
IF NOT ONE INCH ON THIS SHEET, ADJUST SCALES ACCORDINGLY

PROJECT NUMBER: 26284002
SHEET CODE: L-11
SHEET NUMBER: 107 OF 126

DOCUMENT NUMBER: SFC_LP-C-1028-XXXXXXX

USERNAME: BillShad Tue 08 Jul 2008 09:32am
FILENAME: C:\pwworking\sac\d0171341\L10-L19(ICF)

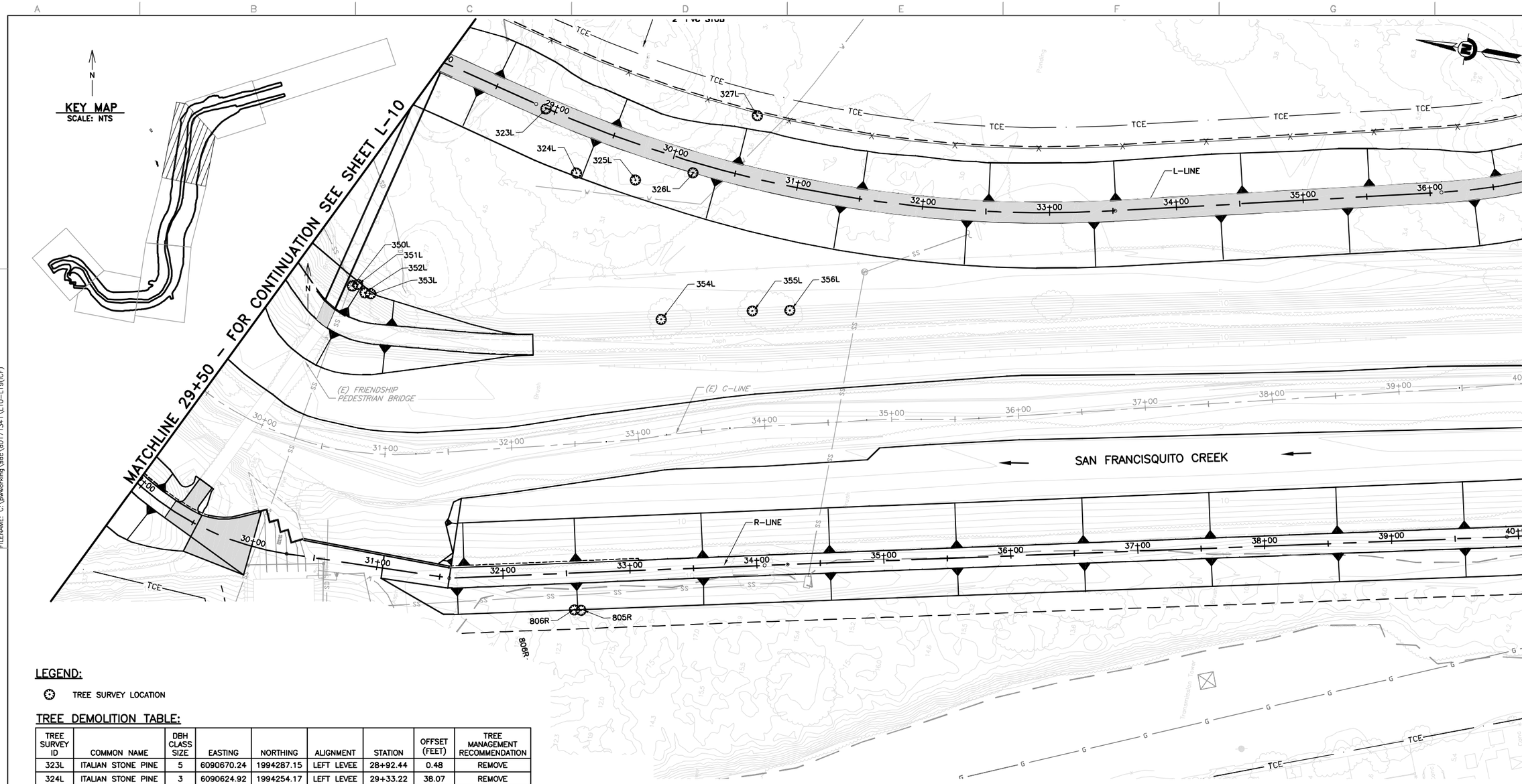

LEGEND:

⊗ TREE SURVEY LOCATION

TREE DEMOLITION TABLE:

TREE SURVEY ID	COMMON NAME	DBH CLASS SIZE	EASTING	NORTHING	ALIGNMENT	STATION	OFFSET (FEET)	TREE MANAGEMENT RECOMMENDATION
323L	ITALIAN STONE PINE	5	6090670.24	1994287.15	LEFT LEVEE	28+92.44	0.48	REMOVE
324L	ITALIAN STONE PINE	3	6090624.92	1994254.17	LEFT LEVEE	29+33.22	38.07	REMOVE
325L	ACACIA	4	6090628.11	1994207.63	LEFT LEVEE	29+77.16	27.34	REMOVE
326L	MONTEREY CYPRESS	8	6090642.05	1994164.14	LEFT LEVEE	30+17.92	8.28	REMOVE
327L	RIVER SHEOAK	4	6090695.53	1994122.57	LEFT LEVEE	30+55.86	−48.37	INSPECT
350L	PEAR	2	6090505.20	1994411.20	LEFT LEVEE	28+10.48	189.93	REMOVE
351L	PEAR	2	6090506.97	1994407.23	LEFT LEVEE	28+13.92	187.29	REMOVE
352L	PEAR	1	6090501.62	1994400.51	LEFT LEVEE	28+21.71	190.91	REMOVE
353L	PEAR	2	6090501.76	1994395.96	LEFT LEVEE	28+26.09	189.71	REMOVE
354L	ARROYO WILLOW	5	6090523.93	1994167.51	LEFT LEVEE	30+25.35	126.18	REMOVE
355L	EUCALYPTUS	7	6090543.64	1994098.21	LEFT LEVEE	30+86.24	102.28	REMOVE
356L	ITALIAN STONE PINE	2	6090549.62	1994069.15	LEFT LEVEE	31+12.54	95.83	REMOVE
805R	COAST LIVE OAK	2	6090286.52	1994192.55	RIGHT LEVEE	32+55.03	28.98	REMOVE
806R	COAST LIVE OAK	2	6090287.10	1994187.35	RIGHT LEVEE	32+60.23	29.57	REMOVE

SHEET NOTES:

1. TREE SURVEY LOCATIONS LEFT OF THE ALIGNMENT WILL HAVE A NEGATIVE OFFSET AND RIGHT OF THE ALIGNMENT WILL HAVE A POSITIVE OFFSET.
2. DIAMETER AT BREAST HEIGHT (DBH) WAS RECORDED IN INCHES BY DBH CLASS SIZE AT 4.5 FEET ABOVE GRADE, FOR EACH TRUNK. WHEN A TREE TRUNK FORKED BELOW THE DBH, THE DIAMETER WAS MEASURED AT THE NARROWEST PART OF THE MAIN STEM BELOW THE FORK AND THE LOCATION OF THE MEASUREMENT WAS RECORDED PER STANDARD ARBORICULTURE PROCEDURE. DBH CLASS SIZES INCLUDE:
   - 0. UNKNOWN DBH
   - 1. 2 TO 6 INCHES DBH
   - 2. 7 TO 12 INCHES DBH
   - 3. 13 TO 18 INCHES DBH
   - 4. 19 TO 24 INCHES DBH
   - 5. 25 TO 30 INCHES DBH
   - 6. 31 TO 36 INCHES DBH
   - 7. 37 TO 42 INCHES DBH
   - 8. GREATER THAN 42" DBH
3. MANAGEMENT REQUIREMENTS:
   1. REMOVE – AS A RESULT OF CONSTRUCTION ACTIVITIES AND/OR DUE TO EXTREME OR MAJOR PROBLEMS.
   2. PROTECT – RETAIN AND PREVENT DAMAGE.
   3. INSPECT – TREE WITH QUESTIONABLE HEALTH THAT MAY REQUIRE ADDITIONAL EVALUATION.
4. ONLY TREES DESIGNATED FOR REMOVAL ARE TO BE REMOVED. ALL OTHER TREES ARE TO REMAIN AND SHALL BE PROTECTED UNLESS DIRECTED OTHERWISE BY THE ENGINEER.

REV	DESCRIPTION	DATE	APPR.

HDR

DATE: JULY 2015
DESIGN: M. CLARKE
DRAWN: H. SUAREZ
CHECKED: H. HABIG

ENGINEERING CERTIFICATION
LICENSED LANDSCAPE ARCHITECT — HEJRIULLA HABIG LA 4 5208 — Signature — October 31, 2016 — Renewal Date — Date — STATE OF CALIFORNIA
PROJECT ENGINEER DATE

SAN FRANCISQUITO CREEK JOINT POWERS AUTHORITY
ACCEPTED BY DISTRICT
PROJECT ENGINEER DATE

PROJECT NAME AND SHEET DESCRIPTION:
SAN FRANCISQUITO CREEK FLOOD REDUCTION, ECOSYSTEM RESTORATION, & RECREATION PROJECT
TREE DEMOLITION PLAN
C-LINE STATION 29+50 TO 40+00

SCALE: 1" = 40'
VERIFY SCALES: 0 — 1"
BAR IS ONE INCH ON ORIGINAL DRAWING IF NOT ONE INCH ON THIS SHEET, ADJUST SCALES ACCORDINGLY

PROJECT NUMBER: 26284002
SHEET CODE: L-12
SHEET NUMBER: 108 OF 126

DOCUMENT NUMBER: SFC_LP-C-1028-XXXXXX

USERNAME: BillShad Tue 08 Jul 2008 09:32am
FILENAME: C:\pwworking\sac\d0171341\L10-L19(CF)

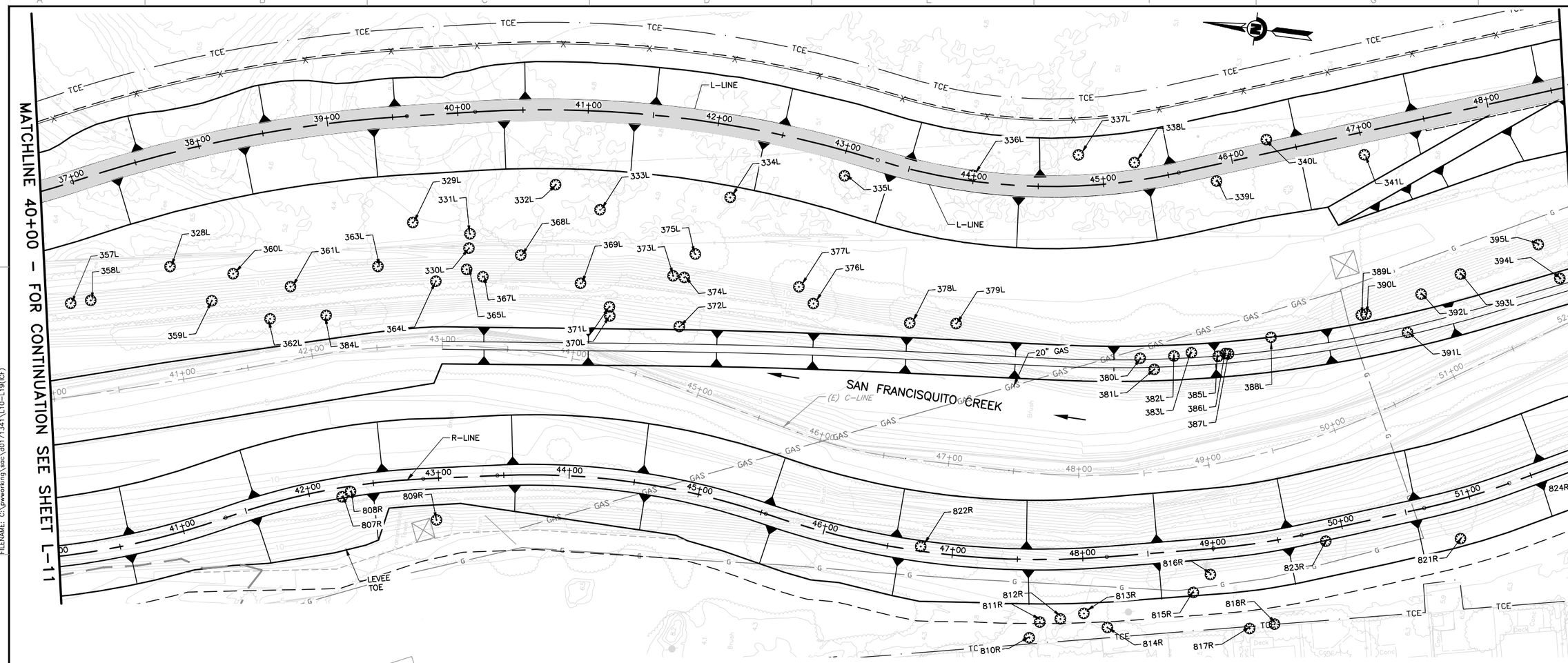

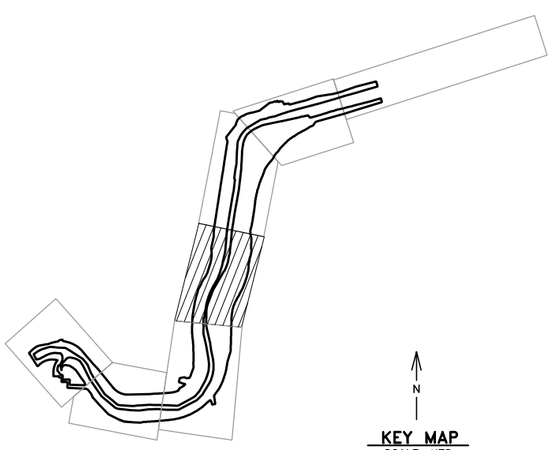

KEY MAP
SCALE: NTS

LEGEND:

⊗ TREE SURVEY LOCATION

TREE DEMOLITION TABLE:

REFER TO SHEET L-18 FOR TABLE

SHEET NOTES:

1. TREE SURVEY LOCATIONS LEFT OF THE ALIGNMENT WILL HAVE A NEGATIVE OFFSET AND RIGHT OF THE ALIGNMENT WILL HAVE A POSITIVE OFFSET.

2. DIAMETER AT BREAST HEIGHT (DBH) WAS RECORDED IN INCHES BY DBH CLASS SIZE AT 4.5 FEET ABOVE GRADE, FOR EACH TRUNK. WHEN A TREE TRUNK FORKED BELOW THE DBH, THE DIAMETER WAS MEASURED AT THE NARROWEST PART OF THE MAIN STEM BELOW THE FORK AND THE LOCATION OF THE MEASUREMENT WAS RECORDED PER STANDARD ARBORICULTURE PROCEDURE. DBH CLASS SIZES INCLUDE:

   0. UNKNOWN DBH
   1. 2 TO 6 INCHES DBH
   2. 7 TO 12 INCHES DBH
   3. 13 TO 18 INCHES DBH
   4. 19 TO 24 INCHES DBH
   5. 25 TO 30 INCHES DBH
   6. 31 TO 36 INCHES DBH
   7. 37 TO 42 INCHES DBH
   8. GREATER THAN 42" DBH

3. MANAGEMENT REQUIREMENTS:
   1. REMOVE – AS A RESULT OF CONSTRUCTION ACTIVITIES AND/OR DUE TO EXTREME OR MAJOR PROBLEMS.
   2. PROTECT – RETAIN AND PREVENT DAMAGE.
   3. INSPECT – TREE WITH QUESTIONABLE HEALTH THAT MAY REQUIRE ADDITIONAL EVALUATION.

4. ONLY TREES DESIGNATED FOR REMOVAL ARE TO BE REMOVED. ALL OTHER TREES ARE TO REMAIN AND SHALL BE PROTECTED UNLESS DIRECTED OTHERWISE BY THE ENGINEER.

REV	DESCRIPTION	DATE	APPR.

HDR

DATE	JULY 2015
DESIGN	M. CLARKE
DRAWN	H. SUAREZ
CHECKED	H. HABIG

ENGINEERING CERTIFICATION

LICENSED LANDSCAPE ARCHITECT — HEATH D. HABIG LIC. # 4503 — Signature — October 31, 2016 Renewal Date — Date — STATE OF CALIFORNIA

PROJECT ENGINEER DATE

SAN FRANCISQUITO CREEK
JOINT POWERS AUTHORITY

ACCEPTED BY DISTRICT

PROJECT ENGINEER DATE

PROJECT NAME AND SHEET DESCRIPTION:

SAN FRANCISQUITO CREEK FLOOD REDUCTION, ECOSYSTEM RESTORATION, & RECREATION PROJECT

TREE DEMOLITION PLAN
C-LINE STATION 40+00 TO 52+00

SCALE	PROJECT NUMBER
1" = 40'	26284002
VERIFY SCALES 0 1" BAR IS ONE INCH ON ORIGINAL DRAWING IF NOT ONE INCH ON THIS SHEET, ADJUST SCALES ACCORDINGLY	SHEET CODE: L-13
	SHEET NUMBER: 109 OF 126

DOCUMENT NUMBER: SFC_LP-C-1028-XXXXXX

USERNAME: BillShad Tue 08 Jul 2008 09:32am
FILENAME: C:\pwworking\sec\d0171341\L10-L19(CF)

LEGEND:

TREE SURVEY LOCATION

TREE DEMOLITION TABLE:

REFER TO SHEET L-18 FOR TABLE

SHEET NOTES:

1. TREE SURVEY LOCATIONS LEFT OF THE ALIGNMENT WILL HAVE A NEGATIVE OFFSET AND RIGHT OF THE ALIGNMENT WILL HAVE A POSITIVE OFFSET.

2. DIAMETER AT BREAST HEIGHT (DBH) WAS RECORDED IN INCHES BY DBH CLASS SIZE AT 4.5 FEET ABOVE GRADE, FOR EACH TRUNK. WHEN A TREE TRUNK FORKED BELOW THE DBH, THE DIAMETER WAS MEASURED AT THE NARROWEST PART OF THE MAIN STEM BELOW THE FORK AND THE LOCATION OF THE MEASUREMENT WAS RECORDED PER STANDARD ARBORICULTURE PROCEDURE. DBH CLASS SIZES INCLUDE:

0. UNKNOWN DBH	5. 25 TO 30 INCHES DBH
1. 2 TO 6 INCHES DBH	6. 31 TO 36 INCHES DBH
2. 7 TO 12 INCHES DBH	7. 37 TO 42 INCHES DBH
3. 13 TO 18 INCHES DBH	8. GREATER THAN 42" DBH
4. 19 TO 24 INCHES DBH	

3. MANAGEMENT REQUIREMENTS:
   1. REMOVE – AS A RESULT OF CONSTRUCTION ACTIVITIES AND/OR DUE TO EXTREME OR MAJOR PROBLEMS.
   2. PROTECT – RETAIN AND PREVENT DAMAGE.
   3. INSPECT – TREE WITH QUESTIONABLE HEALTH THAT MAY REQUIRE ADDITIONAL EVALUATION.

4. ONLY TREES DESIGNATED FOR REMOVAL ARE TO BE REMOVED. ALL OTHER TREES ARE TO REMAIN AND SHALL BE PROTECTED UNLESS DIRECTED OTHERWISE BY THE ENGINEER.

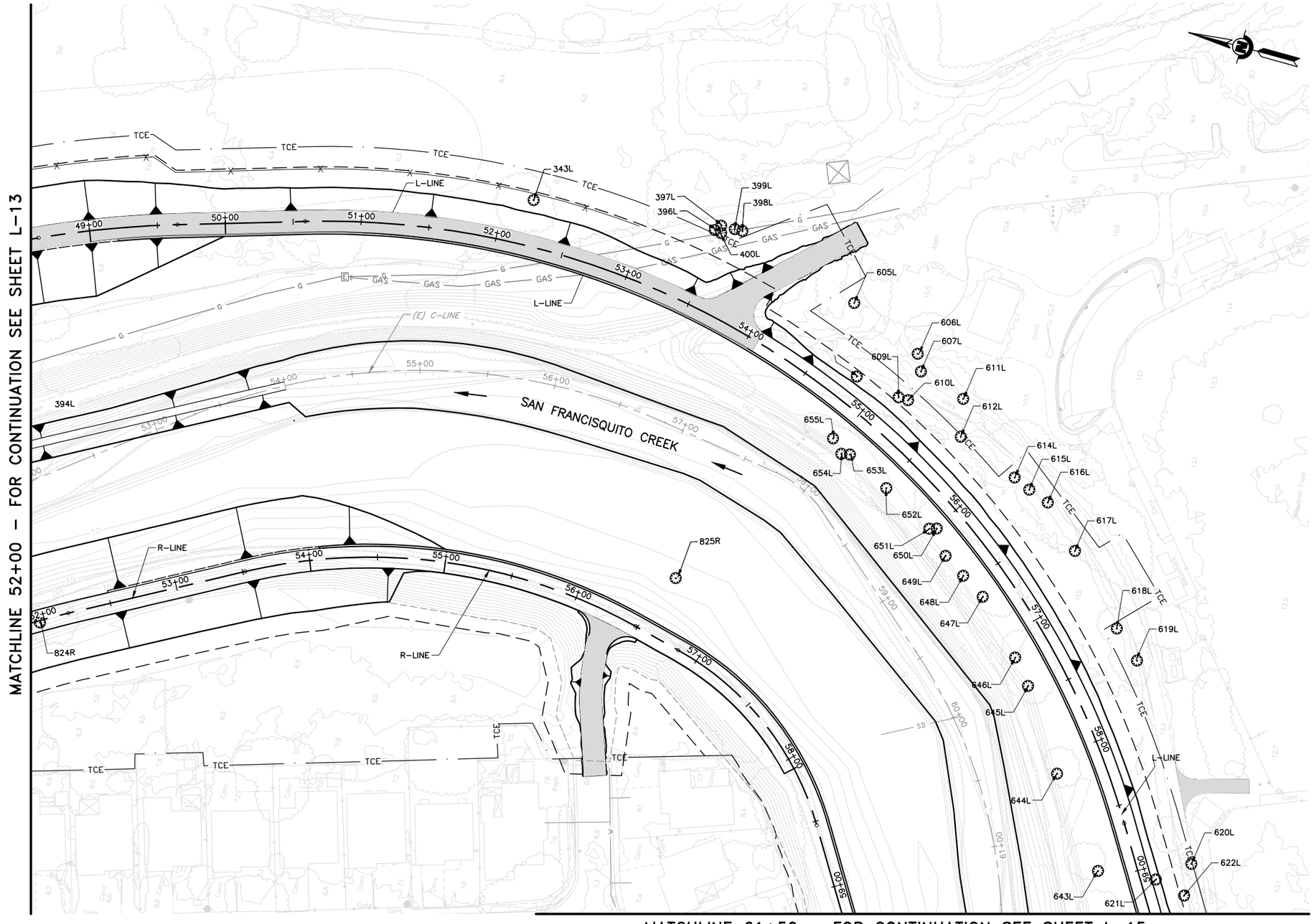

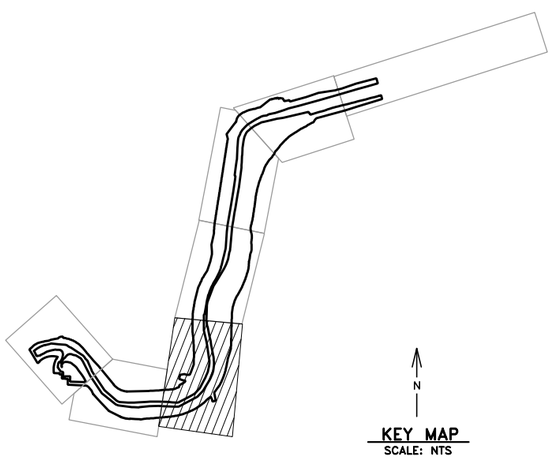

N

KEY MAP
SCALE: NTS

REV	DESCRIPTION	DATE	APPR.

HDR

DATE JULY 2015
DESIGN M. CLARKE
DRAWN H. SUAREZ
CHECKED H. HABIG

ENGINEERING CERTIFICATION
LICENSED LANDSCAPE ARCHITECT HEARTH HABIG LIC. 4508 Expiration October 31, 2016 Renewal Date Date STATE OF CALIFORNIA
PROJECT ENGINEER DATE

SAN FRANCISQUITO CREEK JOINT POWERS AUTHORITY
ACCEPTED BY DISTRICT
PROJECT ENGINEER DATE

PROJECT NAME AND SHEET DESCRIPTION:
SAN FRANCISQUITO CREEK FLOOD REDUCTION, ECOSYSTEM RESTORATION, & RECREATION PROJECT
TREE DEMOLITION PLAN
C-LINE STATION 52+00 TO 61+50

SCALE 1" = 40'
VERIFY SCALES 0 1"
BAR IS ONE INCH ON ORIGINAL DRAWING IF NOT ONE INCH ON THIS SHEET, ADJUST SCALES ACCORDINGLY

PROJECT NUMBER 26284002
SHEET CODE: L-14
SHEET NUMBER: 110 OF 126

DOCUMENT NUMBER: SFC_LP-C-1028-XXXXXX

USERNAME: BillShad Tue 08 Jul 2008 09:32am
FILENAME: C:\pwworking\sac\d0171341\L10-L19(CF)

LEGEND:

⊗ TREE SURVEY LOCATION

TREE DEMOLITION TABLE:

REFER TO SHEET L-18 FOR TABLE

SHEET NOTES:

1. TREE SURVEY LOCATIONS LEFT OF THE ALIGNMENT WILL HAVE A NEGATIVE OFFSET AND RIGHT OF THE ALIGNMENT WILL HAVE A POSITIVE OFFSET.

2. DIAMETER AT BREAST HEIGHT (DBH) WAS RECORDED IN INCHES BY DBH CLASS SIZE AT 4.5 FEET ABOVE GRADE, FOR EACH TRUNK. WHEN A TREE TRUNK FORKED BELOW THE DBH, THE DIAMETER WAS MEASURED AT THE NARROWEST PART OF THE MAIN STEM BELOW THE FORK AND THE LOCATION OF THE MEASUREMENT WAS RECORDED PER STANDARD ARBORICULTURE PROCEDURE. DBH CLASS SIZES INCLUDE:

0. UNKNOWN DBH	5. 25 TO 30 INCHES DBH
1. 2 TO 6 INCHES DBH	6. 31 TO 36 INCHES DBH
2. 7 TO 12 INCHES DBH	7. 37 TO 42 INCHES DBH
3. 13 TO 18 INCHES DBH	8. GREATER THAN 42" DBH
4. 19 TO 24 INCHES DBH	

3. MANAGEMENT REQUIREMENTS:
   1. REMOVE – AS A RESULT OF CONSTRUCTION ACTIVITIES AND/OR DUE TO EXTREME OR MAJOR PROBLEMS.
   2. PROTECT – RETAIN AND PREVENT DAMAGE.
   3. INSPECT – TREE WITH QUESTIONABLE HEALTH THAT MAY REQUIRE ADDITIONAL EVALUATION.

4. ONLY TREES DESIGNATED FOR REMOVAL ARE TO BE REMOVED. ALL OTHER TREES ARE TO REMAIN AND SHALL BE PROTECTED UNLESS DIRECTED OTHERWISE BY THE ENGINEER.

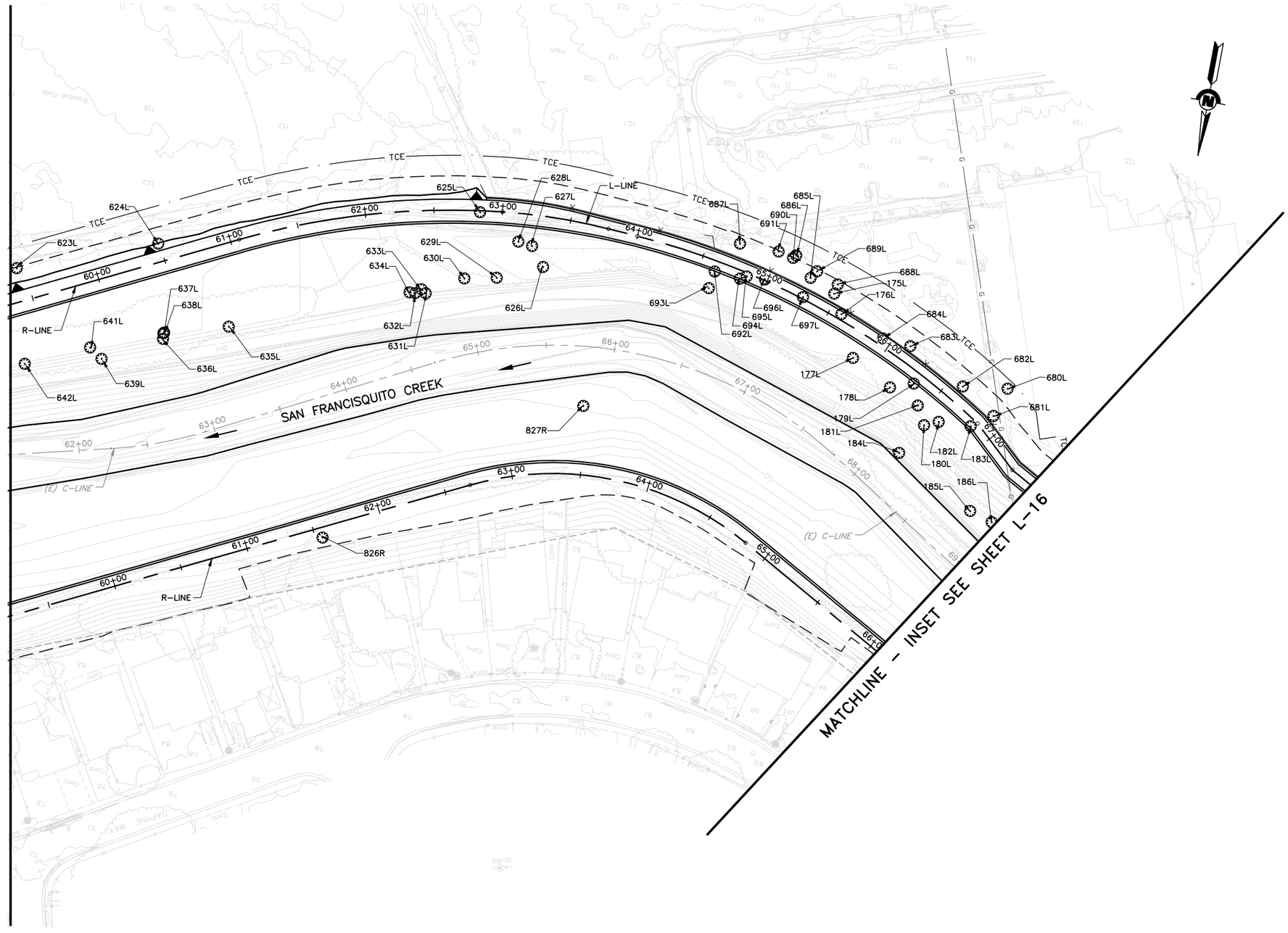

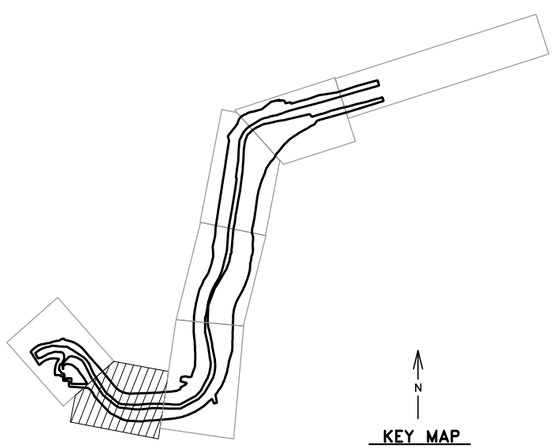

KEY MAP
SCALE: NTS

REV	DESCRIPTION	DATE	APPR.

HDR

DATE	JULY 2015
DESIGN	M. CLARKE
DRAWN	H. SUAREZ
CHECKED	H. HABIG

ENGINEERING CERTIFICATION

LICENSED LANDSCAPE ARCHITECT — HEATH HABIG LIC. NO. 5028 — STATE OF CALIFORNIA — Date Signed October 31, 2012 — Renewal Date — Date

PROJECT ENGINEER DATE

SAN FRANCISQUITO CREEK
JOINT POWERS AUTHORITY

ACCEPTED BY DISTRICT

PROJECT ENGINEER DATE

PROJECT NAME AND SHEET DESCRIPTION:

SAN FRANCISQUITO CREEK FLOOD REDUCTION, ECOSYSTEM RESTORATION, & RECREATION PROJECT

TREE DEMOLITION PLAN
C-LINE STATION 61+50 TO 69+00

SCALE	PROJECT NUMBER
1" = 40'	26284002
VERIFY SCALES 0 1" BAR IS ONE INCH ON ORIGINAL DRAWING IF NOT ONE INCH ON THIS SHEET, ADJUST SCALES ACCORDINGLY	SHEET CODE: L-15
	SHEET NUMBER: 111 OF 126

DOCUMENT NUMBER: SFC_LP-C-1028-XXXXXX

USERNAME: BillShad Tue 08 Jul 2008 09:32am
FILENAME: C:\pwworking\sac\d0171341\L10-L19(CF)

LEGEND:

TREE SURVEY LOCATION

TREE DEMOLITION TABLE:

REFER TO SHEET L-19 FOR TABLE

SHEET NOTES:

1. TREE SURVEY LOCATIONS LEFT OF THE ALIGNMENT WILL HAVE A NEGATIVE OFFSET AND RIGHT OF THE ALIGNMENT WILL HAVE A POSITIVE OFFSET.

2. DIAMETER AT BREAST HEIGHT (DBH) WAS RECORDED IN INCHES BY DBH CLASS SIZE AT 4.5 FEET ABOVE GRADE, FOR EACH TRUNK. WHEN A TREE TRUNK FORKED BELOW THE DBH, THE DIAMETER WAS MEASURED AT THE NARROWEST PART OF THE MAIN STEM BELOW THE FORK AND THE LOCATION OF THE MEASUREMENT WAS RECORDED PER STANDARD ARBORICULTURE PROCEDURE. DBH CLASS SIZES INCLUDE:

0. UNKNOWN DBH	5. 25 TO 30 INCHES DBH
1. 2 TO 6 INCHES DBH	6. 31 TO 36 INCHES DBH
2. 7 TO 12 INCHES DBH	7. 37 TO 42 INCHES DBH
3. 13 TO 18 INCHES DBH	8. GREATER THAN 42" DBH
4. 19 TO 24 INCHES DBH	

3. MANAGEMENT REQUIREMENTS:
   1. REMOVE – AS A RESULT OF CONSTRUCTION ACTIVITIES AND/OR DUE TO EXTREME OR MAJOR PROBLEMS.
   2. PROTECT – RETAIN AND PREVENT DAMAGE.
   3. INSPECT – TREE WITH QUESTIONABLE HEALTH THAT MAY REQUIRE ADDITIONAL EVALUATION.

4. ONLY TREES DESIGNATED FOR REMOVAL ARE TO BE REMOVED. ALL OTHER TREES ARE TO REMAIN AND SHALL BE PROTECTED UNLESS DIRECTED OTHERWISE BY THE ENGINEER.

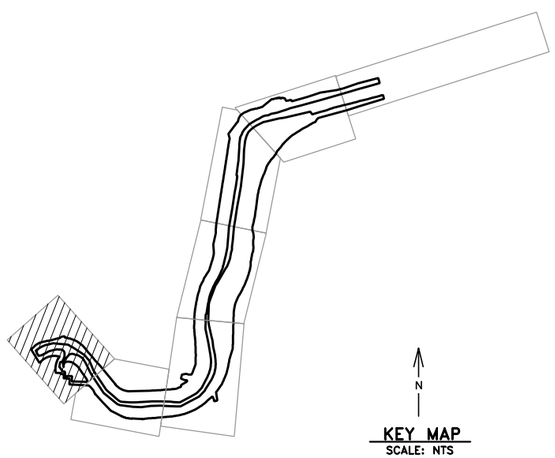

N

KEY MAP
SCALE: NTS

REV	DESCRIPTION	DATE	APPR.

HDR

DATE	JULY 2015
DESIGN	M. CLARKE
DRAWN	H. SUAREZ
CHECKED	H. HABIG

ENGINEERING CERTIFICATION

LICENSED LANDSCAPE ARCHITECT — HAZELD HABIG LIC. NO. 2500 — Expiration Date: October 31, 2010 — Renewal Date — Date — STATE OF CALIFORNIA

PROJECT ENGINEER DATE

SAN FRANCISQUITO CREEK
JOINT POWERS AUTHORITY

ACCEPTED BY DISTRICT

PROJECT ENGINEER DATE

PROJECT NAME AND SHEET DESCRIPTION:

SAN FRANCISQUITO CREEK FLOOD REDUCTION, ECOSYSTEM RESTORATION, & RECREATION PROJECT

TREE DEMOLITION PLAN
C-LINE STATION 69+00 TO 77+66

SCALE	PROJECT NUMBER
1" = 40'	26284002
VERIFY SCALES: 0 — 1" BAR IS ONE INCH ON ORIGINAL DRAWING IF NOT ONE INCH ON THIS SHEET, ADJUST SCALES ACCORDINGLY	SHEET CODE: L-16
	SHEET NUMBER: 112 OF 126

DOCUMENT NUMBER: SFC_LP-C-1028-XXXXXX

USERNAME: BillShad Tue 08 Jul 2008 09:32am
FILENAME: C:\pwworking\sec\d0171341\L10-L19(GF)

LEGEND:

⊗ TREE SURVEY LOCATION

SHEET NOTES:

1. TREE SURVEY LOCATIONS LEFT OF THE ALIGNMENT WILL HAVE A NEGATIVE OFFSET AND RIGHT OF THE ALIGNMENT WILL HAVE A POSITIVE OFFSET.

2. DIAMETER AT BREAST HEIGHT (DBH) WAS RECORDED IN INCHES BY DBH CLASS SIZE AT 4.5 FEET ABOVE GRADE, FOR EACH TRUNK. WHEN A TREE TRUNK FORKED BELOW THE DBH, THE DIAMETER WAS MEASURED AT THE NARROWEST PART OF THE MAIN STEM BELOW THE FORK AND THE LOCATION OF THE MEASUREMENT WAS RECORDED PER STANDARD ARBORICULTURE PROCEDURE. DBH CLASS SIZES INCLUDE:

   0. UNKNOWN DBH
   1. 2 TO 6 INCHES DBH
   2. 7 TO 12 INCHES DBH
   3. 13 TO 18 INCHES DBH
   4. 19 TO 24 INCHES DBH
   5. 25 TO 30 INCHES DBH
   6. 31 TO 36 INCHES DBH
   7. 37 TO 42 INCHES DBH
   8. GREATER THAN 42" DBH

3. MANAGEMENT REQUIREMENTS:
   1. REMOVE – AS A RESULT OF CONSTRUCTION ACTIVITIES AND/OR DUE TO EXTREME OR MAJOR PROBLEMS.
   2. PROTECT – RETAIN AND PREVENT DAMAGE.
   3. INSPECT – TREE WITH QUESTIONABLE HEALTH THAT MAY REQUIRE ADDITIONAL EVALUATION.

4. ONLY TREES DESIGNATED FOR REMOVAL ARE TO BE REMOVED. ALL OTHER TREES ARE TO REMAIN AND SHALL BE PROTECTED UNLESS DIRECTED OTHERWISE BY THE ENGINEER.

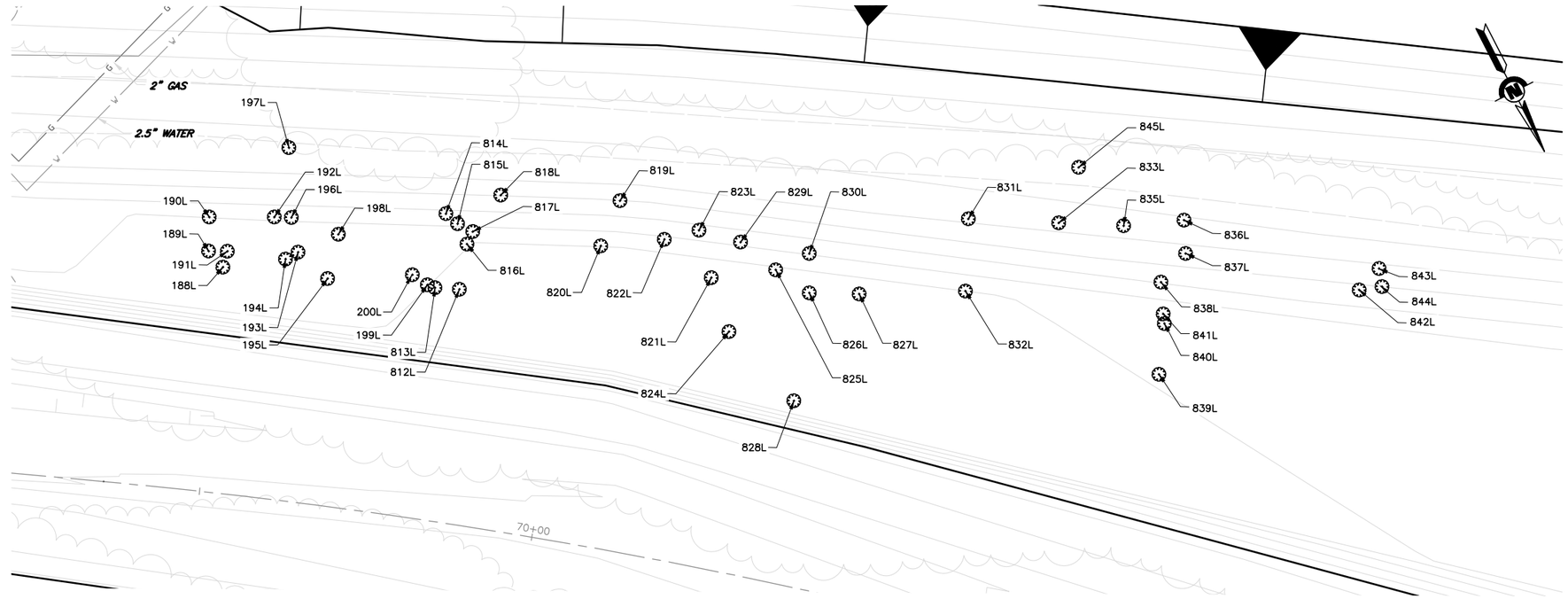

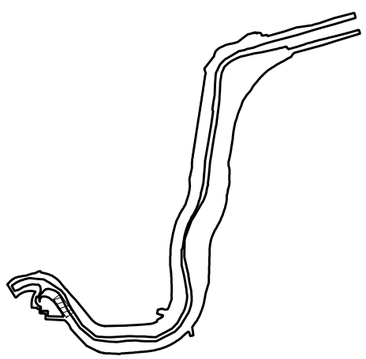

N

KEY MAP
SCALE: NTS

TREE DEMOLITION TABLE:

TREE SURVEY ID	COMMON NAME	DBH CLASS SIZE	EASTING	NORTHING	ALIGNMENT	STATION	OFFSET (FEET)	TREE MANAGEMENT RECOMMENDATION
188L	WHITE POPLAR	3	6089876.53	1991538.18	LEFT LEVEE	67+80.08	53.01	REMOVE
189L	WHITE POPLAR	1	6089877.35	1991535.08	LEFT LEVEE	70+18.85	239.36	REMOVE
190L	WHITE POPLAR	2	6089874.98	1991530.61	LEFT LEVEE	67+79.68	45.29	REMOVE
191L	WHITE POPLAR	2	6089874.87	1991536.39	LEFT LEVEE	67+81.23	50.85	REMOVE
192L	WHITE POPLAR	1	6089866.33	1991535.00	LEFT LEVEE	67+89.15	47.36	REMOVE
193L	WHITE POPLAR	2	6089865.56	1991541.28	LEFT LEVEE	67+91.48	53.26	REMOVE
194L	WHITE POPLAR	2	6089867.69	1991541.35	LEFT LEVEE	67+89.43	53.86	REMOVE
195L	WHITE POPLAR	2	6089863.40	1991546.76	LEFT LEVEE	67+94.94	58.02	REMOVE
196L	WHITE POPLAR	2	6089864.09	1991536.23	LEFT LEVEE	67+91.63	48.00	REMOVE
197L	WHITE POPLAR	2	6089859.72	1991526.78	LEFT LEVEE	67+93.49	37.75	REMOVE
198L	WHITE POPLAR	2	6089858.98	1991541.64	LEFT LEVEE	67+97.93	51.95	REMOVE
199L	WHITE POPLAR	1	6089850.60	1991554.34	LEFT LEVEE	73+51.92	385.28	REMOVE
200L	WHITE POPLAR	1	6089851.90	1991551.99	LEFT LEVEE	70+43.08	220.75	REMOVE
812L	WHITE POPLAR	1	6089846.65	1991557.11	LEFT LEVEE	71+07.50	276.42	REMOVE
813L	WHITE POPLAR	2	6089849.76	1991555.24	LEFT LEVEE	71+04.71	278.74	REMOVE
814L	WHITE POPLAR	1	6089843.32	1991546.14	LEFT LEVEE	70+40.32	210.73	REMOVE
815L	WHITE POPLAR	1	6089842.44	1991548.29	LEFT LEVEE	70+42.64	210.60	REMOVE
816L	WHITE POPLAR	1	6089842.57	1991551.63	LEFT LEVEE	70+45.67	211.80	REMOVE
817L	WHITE POPLAR	1	6089840.97	1991550.34	LEFT LEVEE	70+45.05	209.87	REMOVE
818L	WHITE POPLAR	7	6089834.77	1991547.40	LEFT LEVEE	70+44.28	203.06	REMOVE
819L	WHITE POPLAR	1	6089819.33	1991556.18	LEFT LEVEE	71+15.65	250.33	REMOVE
820L	WHITE POPLAR	2	6089824.92	1991560.88	LEFT LEVEE	71+18.25	257.16	REMOVE
821L	WHITE POPLAR	2	6089812.39	1991572.58	LEFT LEVEE	71+33.43	249.20	REMOVE

TREE SURVEY ID	COMMON NAME	DBH CLASS SIZE	EASTING	NORTHING	ALIGNMENT	STATION	OFFSET (FEET)	TREE MANAGEMENT RECOMMENDATION
822L	WHITE POPLAR	6	6089816.03	1991564.31	LEFT LEVEE	71+24.42	249.91	REMOVE
823L	ARROYO WILLOW	2	6089810.83	1991565.45	LEFT LEVEE	68+09.64	76.32	REMOVE
824L	ARROYO WILLOW	2	6089813.69	1991580.93	LEFT LEVEE	71+40.88	253.18	REMOVE
825L	WHITE POPLAR	2	6089803.32	1991575.88	LEFT LEVEE	68+13.51	88.57	REMOVE
826L	WHITE POPLAR	4	6089800.41	1991581.22	LEFT LEVEE	68+14.61	94.55	REMOVE
827L	WHITE POPLAR	1	6089793.87	1991584.72	LEFT LEVEE	68+19.73	99.91	REMOVE
828L	UNKNOWN	1	6089809.74	1991594.50	LEFT LEVEE	68+7.25	104.41	REMOVE
829L	ARROYO WILLOW	2	6089806.11	1991569.83	LEFT LEVEE	68+12.76	81.96	REMOVE
830L	EUCALYPTUS	7	6089797.75	1991575.98	LEFT LEVEE	68+18.77	90.40	REMOVE
831L	BLUE ELDERBERRY	2	6089774.29	1991582.11	LEFT LEVEE	68+39.15	103.56	REMOVE
832L	BLUE ELDERBERRY	2	6089779.55	1991591.52	LEFT LEVEE	68+31.21	110.85	REMOVE
833L	RIVER REDGUM	3	6089762.57	1991588.77	LEFT LEVEE	68+48.20	113.54	REMOVE
835L	WHITE POPLAR	3	6089754.13	1991593.52	LEFT LEVEE	68+54.74	120.68	REMOVE
836L	WHITE POPLAR	2	6089745.74	1991596.88	LEFT LEVEE	68+61.66	126.50	REMOVE
837L	WHITE POPLAR	3	6089747.78	1991601.40	LEFT LEVEE	68+58.31	130.16	REMOVE
838L	WHITE POPLAR	2	6089753.00	1991603.52	LEFT LEVEE	68+52.69	130.54	REMOVE
839L	WHITE POPLAR	4	6089759.47	1991615.63	LEFT LEVEE	68+42.76	140.03	REMOVE
840L	HIND'S BLACK WALNUT	2	6089755.32	1991609.27	LEFT LEVEE	68+48.69	135.27	REMOVE
841L	HIND'S BLACK WALNUT	1	6089754.84	1991607.90	LEFT LEVEE	68+49.58	134.12	REMOVE
842L	WHITE POPLAR	4	6089727.21	1991617.98	LEFT LEVEE	68+72.68	152.32	REMOVE
843L	WHITE POPLAR	3	6089723.12	1991616.46	LEFT LEVEE	68+77.03	152.16	REMOVE
844L	WHITE POPLAR	5	6089723.93	1991619.05	LEFT LEVEE	68+75.46	154.37	REMOVE
845L	ARROYO WILLOW	1	6089756.18	1991582.73	LEFT LEVEE	68+56.16	109.80	REMOVE

REV	DESCRIPTION	DATE	APPR.

HDR

DATE: JULY 2015
DESIGN: M. CLARKE
DRAWN: H. SUAREZ
CHECKED: H. HABIG

ENGINEERING CERTIFICATION
LICENSED LANDSCAPE ARCHITECT HEATH HABIG LIC. NO. 5028 STATE OF CALIFORNIA
Expiration Date: October 31, 2010
Renewal Date
Date
PROJECT ENGINEER DATE

SAN FRANCISQUITO CREEK
JOINT POWERS AUTHORITY
ACCEPTED BY DISTRICT
PROJECT ENGINEER DATE

PROJECT NAME AND SHEET DESCRIPTION:
SAN FRANCISQUITO CREEK FLOOD REDUCTION, ECOSYSTEM RESTORATION, & RECREATION PROJECT
TREE DEMOLITION PLAN INSET AND TABLE

SCALE: 1" = 10'
VERIFY SCALES: 0 1"
BAR IS ONE INCH ON ORIGINAL DRAWING IF NOT ONE INCH ON THIS SHEET, ADJUST SCALES ACCORDINGLY

PROJECT NUMBER: 26284002
SHEET CODE: L-17
SHEET NUMBER: 113 OF 126

DOCUMENT NUMBER: SFC_LP-C-1028-XXXXXX

USERNAME: BillShad Tue 08 Jul 2008 09:32am
FILENAME: C:\pwworking\sac\d0171341\L10-L19(GF)

TREE DEMOLITION TABLE (SHEET L-13):

TREE SURVEY ID	COMMON NAME	DBH CLASS SIZE	EASTING	NORTHING	ALIGNMENT	STATION	OFFSET (FEET)	TREE MANAGEMENT RECOMMENDATION
328L	ITALIAN STONE PINE	5	6090711.57	1993414.71	LEFT LEVEE	37+54.19	83.98	REMOVE
329L	ITALIAN STONE PINE	8	6090769.17	1993234.98	LEFT LEVEE	39+60.50	81.52	REMOVE
330L	EUCALYPTUS	1	6090755.29	1993189.83	LEFT LEVEE	40+02.22	103.77	REMOVE
331L	EUCALYPTUS	2	6090766.34	1993190.49	LEFT LEVEE	40+03.68	92.80	REMOVE
332L	EUCALYPTUS	6	6090812.11	1993130.45	LEFT LEVEE	40+75.55	57.26	REMOVE
333L	PEPPERTREE	4	6090797.48	1993094.26	LEFT LEVEE	41+13.02	75.38	REMOVE
334L	ACACIA	3	6090819.80	1992996.70	LEFT LEVEE	42+18.96	54.48	REMOVE
335L	MYOPORUM	5	6090847.51	1992912.15	LEFT LEVEE	43+04.12	18.75	REMOVE
336L	EUCALYPTUS	4	6090860.67	1992815.02	LEFT LEVEE	43+99.13	−4.42	REMOVE
337L	RIVER SHEOAK	4	6090886.67	1992736.89	LEFT LEVEE	44+81.91	−23.71	REMOVE
338L	MYOPORUM	5	6090886.35	1992693.71	LEFT LEVEE	45+25.76	−13.69	REMOVE
339L	COMMON BLUEGUM	4	6090880.56	1992629.64	LEFT LEVEE	45+85.04	12.45	REMOVE
340L	RIVER SHEOAK	4	6090916.96	1992595.89	LEFT LEVEE	46+29.17	−10.28	REMOVE
341L	RIVER SHEOAK	5	6090915.17	1992520.06	LEFT LEVEE	46+99.85	17.25	REMOVE
357L	GLOSSY PRIVET	0	6090673.87	1993486.42	LEFT LEVEE	36+73.92	88.52	REMOVE
358L	GLOSSY PRIVET	1	6090678.09	1993471.46	LEFT LEVEE	36+86.61	90.63	REMOVE
359L	COMMON BLUEGUM	7	6090689.88	1993379.63	LEFT LEVEE	37+81.22	117.33	REMOVE
360L	CANARY ISLAND DATE PALM	0	6090712.48	1993366.07	LEFT LEVEE	38+04.47	101.00	REMOVE
361L	EUCALYPTUS	7	6090708.34	1993321.37	LEFT LEVEE	38+50.61	119.29	REMOVE
362L	EUCALYPTUS	3	6090681.95	1993333.65	LEFT LEVEE	38+27.74	140.56	REMOVE
363L	ITALIAN STONE PINE	2	6090732.40	1993257.07	LEFT LEVEE	39+28.06	112.90	REMOVE
364L	ITALIAN STONE PINE	2	6090726.99	1993211.63	LEFT LEVEE	39+75.40	127.39	REMOVE
365L	ITALIAN STONE PINE	2	6090738.93	1993189.44	LEFT LEVEE	39+99.47	119.91	REMOVE
367L	ITALIAN STONE PINE	3	6090735.03	1993176.44	LEFT LEVEE	40+11.49	126.23	REMOVE
368L	EUCALYPTUS	1	6090755.20	1993149.91	LEFT LEVEE	40+45.52	110.98	REMOVE
369L	ITALIAN STONE PINE	3	6090739.79	1993101.68	LEFT LEVEE	40+99.06	132.24	REMOVE
370L	ITALIAN STONE PINE	5	6090717.89	1993076.26	LEFT LEVEE	41+27.50	156.02	REMOVE
371L	ITALIAN STONE PINE	2	6090724.81	1993077.51	LEFT LEVEE	41+26.49	149.04	REMOVE
372L	ITALIAN STONE PINE	5	6090716.74	1993022.55	LEFT LEVEE	41+93.19	158.32	REMOVE
373L	ITALIAN STONE PINE	2	6090754.67	1993032.27	LEFT LEVEE	41+81.16	120.49	REMOVE
374L	ITALIAN STONE PINE	2	6090754.52	1993023.62	LEFT LEVEE	41+91.21	120.57	REMOVE
375L	EUCALYPTUS	4	6090773.30	1993017.55	LEFT LEVEE	41+97.79	101.68	REMOVE
376L	ITALIAN STONE PINE	5	6090747.56	1992923.07	LEFT LEVEE	43+08.41	119.22	REMOVE
377L	ITALIAN STONE PINE	4	6090758.76	1992935.76	LEFT LEVEE	42+92.10	109.91	REMOVE
378L	COAST LIVE OAK	6	6090742.32	1992848.16	LEFT LEVEE	43+73.30	115.05	REMOVE
379L	CANARY ISLAND PINE	1	6090746.49	1992812.88	LEFT LEVEE	44+01.41	109.75	REMOVE
380L	ITALIAN STONE PINE	2	6090738.54	1992669.89	LEFT LEVEE	45+12.48	135.30	REMOVE
381L	ITALIAN STONE PINE	2	6090731.43	1992658.09	LEFT LEVEE	45+19.83	145.14	REMOVE
382L	PEPPERTREE	3	6090743.62	1992644.47	LEFT LEVEE	45+32.33	137.12	REMOVE
383L	ITALIAN STONE PINE	2	6090747.84	1992631.54	LEFT LEVEE	45+42.76	136.93	REMOVE
384L	CALIFORNIA BAY LAUREL	2	6090690.09	1993291.43	LEFT LEVEE	38+77.69	145.35	REMOVE
385L	COAST LIVE OAK	2	6090747.75	1992610.78	LEFT LEVEE	45+57.71	143.74	REMOVE
386L	ITALIAN STONE PINE	2	6090750.61	1992605.50	LEFT LEVEE	45+63.45	142.84	REMOVE
387L	ITALIAN STONE PINE	2	6090750.72	1992603.34	LEFT LEVEE	45+65.52	143.48	REMOVE
388L	CANARY ISLAND DATE PALM	0	6090767.43	1992572.73	LEFT LEVEE	46+00.00	138.20	REMOVE
389L	ITALIAN STONE PINE	2	6090793.27	1992506.39	LEFT LEVEE	46+71.17	136.51	REMOVE
390L	ITALIAN STONE PINE	4	6090794.45	1992502.89	LEFT LEVEE	46+74.86	136.59	REMOVE
391L	CANARY ISLAND DATE PALM	8	6090784.69	1992469.66	LEFT LEVEE	47+02.77	157.09	REMOVE
392L	ITALIAN STONE PINE	2	6090815.12	1992463.13	LEFT LEVEE	47+19.28	130.71	REMOVE
393L	ITALIAN STONE PINE	2	6090834.17	1992435.44	LEFT LEVEE	47+51.81	122.23	REMOVE
394L	CANARY ISLAND DATE PALM	8	6090840.76	1992359.50	LEFT LEVEE	48+25.44	141.91	REMOVE
395L	ITALIAN STONE PINE	3	6090864.33	1992379.28	LEFT LEVEE	48+14.89	113.02	PROTECT
807R	APPLE	1	6090558.89	1993255.41	RIGHT LEVEE	42+31.82	4.14	REMOVE
808R	PLUM	1	6090554.03	1993261.35	RIGHT LEVEE	42+24.65	7.10	REMOVE
809R	OLIVE	0	6090545.96	1993187.34	RIGHT LEVEE	42+97.13	31.83	REMOVE
810R	PLUM	1	6090515.50	1992726.12	RIGHT LEVEE	47+59.81	59.86	PROTECT
811R	Yucca	4	6090528.36	1992719.70	RIGHT LEVEE	47+67.17	47.90	REMOVE
812R	APPLE	3	6090532.86	1992704.49	RIGHT LEVEE	47+81.81	45.60	REMOVE
813R	APPLE	2	6090539.34	1992687.17	RIGHT LEVEE	47+98.81	42.09	REMOVE
814R	CANARY ISLAND DATE PALM	0	6090531.06	1992667.93	RIGHT LEVEE	48+14.91	53.89	PROTECT
815R	HIND'S BLACK WALNUT	1	6090566.13	1992606.20	RIGHT LEVEE	48+82.30	32.48	REMOVE

SCALE: NTS

TREE DEMOLITION TABLE (SHEET L-13 CONT.):

TREE SURVEY ID	COMMON NAME	DBH CLASS SIZE	EASTING	NORTHING	ALIGNMENT	STATION	OFFSET (FEET)	TREE MANAGEMENT RECOMMENDATION
816R	CANARY ISLAND DATE PALM	0	6090581.42	1992595.03	RIGHT LEVEE	48+96.42	19.86	REMOVE
817R	HIND'S BLACK WALNUT	4	6090544.35	1992559.90	RIGHT LEVEE	49+20.45	63.91	PROTECT
818R	HIND'S BLACK WALNUT	3	6090550.12	1992541.52	RIGHT LEVEE	49+37.54	63.21	PROTECT
821R	CANARY ISLAND DATE PALM	0	6090633.63	1992408.92	RIGHT LEVEE	50+85.51	29.19	REMOVE
822R	TREE TOBACCO	1	6090573.94	1992817.60	RIGHT LEVEE	46+75.24	−3.55	REMOVE
823R	PLUM	2	6090618.25	1992510.83	RIGHT LEVEE	49+85.67	8.50	REMOVE

TREE DEMOLITION TABLE (SHEET L-14):

TREE SURVEY ID	COMMON NAME	DBH CLASS SIZE	EASTING	NORTHING	ALIGNMENT	STATION	OFFSET (FEET)	TREE MANAGEMENT RECOMMENDATION
343L	ITALIAN STONE PINE	5	6091080.96	1992020.50	LEFT LEVEE	52+20.30	−33.71	REMOVE
395L	ITALIAN STONE PINE	3	6091082.50	1991880.55	LEFT LEVEE	53+48.87	−57.53	REMOVE
396L	UNKNOWN	1	6091083.89	1991885.42	LEFT LEVEE	53+44.25	−57.62	PROTECT
397L	PEPPERTREE	1	6091087.87	1991881.45	LEFT LEVEE	53+46.82	−62.49	REMOVE
398L	GLOSSY PRIVET	1	6091086.89	1991865.37	LEFT LEVEE	53+61.06	−65.88	PROTECT
399L	PEPPERTREE	6	6091087.14	1991871.15	LEFT LEVEE	53+55.99	−64.52	INSPECT
605L	EUCALYPTUS	6	6091049.95	1991774.79	LEFT LEVEE	54+49.58	−62.91	INSPECT
606L	EUCALYPTUS	6	6091021.75	1991721.95	LEFT LEVEE	55+03.93	−61.96	INSPECT
607L	EUCALYPTUS	8	6091009.43	1991717.26	LEFT LEVEE	55+13.29	−53.66	PROTECT
608L	EUCALYPTUS	5	6090997.10	1991762.99	LEFT LEVEE	54+81.27	−20.63	REMOVE
609L	EUCALYPTUS	4	6090987.73	1991729.88	LEFT LEVEE	55+13.46	−28.55	PROTECT
610L	EUCALYPTUS	4	6090986.94	1991722.67	LEFT LEVEE	55+19.74	−31.58	PROTECT
611L	EUCALYPTUS	5	6090995.36	1991683.04	LEFT LEVEE	55+46.64	−59.97	PROTECT
612L	EUCALYPTUS	8	6090967.59	1991679.63	LEFT LEVEE	55+63.81	−39.02	PROTECT
614L	EUCALYPTUS	8	6090945.41	1991635.14	LEFT LEVEE	56+09.35	−48.50	PROTECT
615L	EUCALYPTUS	7	6090938.62	1991622.87	LEFT LEVEE	56+22.07	−51.24	PROTECT
616L	EUCALYPTUS	5	6090931.86	1991607.81	LEFT LEVEE	56+36.55	−56.15	PROTECT
617L	EUCALYPTUS	5	6090900.47	1991581.61	LEFT LEVEE	56+73.90	−51.72	PROTECT
618L	EUCALYPTUS	6	6090850.04	1991540.84	LEFT LEVEE	57+33.77	−48.83	PROTECT
619L	EUCALYPTUS	8	6090829.64	1991521.89	LEFT LEVEE	57+59.39	−51.45	PROTECT
620L	EUCALYPTUS	8	6090689.88	1991455.05	LEFT LEVEE	59+06.05	−39.28	PROTECT
621L	EUCALYPTUS	5	6090673.79	1991478.57	LEFT LEVEE	59+09.96	−11.06	REMOVE
622L	EUCALYPTUS	6	6090665.95	1991456.07	LEFT LEVEE	59+27.00	−27.70	PROTECT
643L	EUCALYPTUS	5	6090672.13	1991521.58	LEFT LEVEE	58+92.25	28.18	REMOVE
644L	EUCALYPTUS	8	6090736.97	1991564.35	LEFT LEVEE	58+12.09	35.48	REMOVE
645L	EUCALYPTUS	4	6090796.51	1991597.24	LEFT LEVEE	57+40.62	28.62	REMOVE
646L	EUCALYPTUS	8	6090815.28	1991610.41	LEFT LEVEE	57+16.66	26.97	REMOVE
647L	EUCALYPTUS	5	6090854.89	1991642.09	LEFT LEVEE	56+63.87	23.31	REMOVE
648L	EUCALYPTUS	4	6090867.38	1991659.07	LEFT LEVEE	56+42.09	26.02	REMOVE
649L	EUCALYPTUS	5	6090879.39	1991674.48	LEFT LEVEE	56+21.70	27.32	REMOVE
650L	GLOSSY PRIVET	1	6090897.98	1991684.61	LEFT LEVEE	56+01.22	19.53	REMOVE
651L	GLOSSY PRIVET	1	6090896.83	1991689.93	LEFT LEVEE	55+97.67	23.75	REMOVE
652L	EUCALYPTUS	8	6090920.50	1991726.47	LEFT LEVEE	55+52.34	26.38	REMOVE
653L	GLOSSY PRIVET	1	6090939.77	1991757.42	LEFT LEVEE	55+14.21	26.75	REMOVE
654L	GLOSSY PRIVET	2	6090939.07	1991763.68	LEFT LEVEE	55+08.92	30.52	REMOVE
655L	GLOSSY PRIVET	1	6090949.16	1991771.80	LEFT LEVEE	54+96.30	25.76	REMOVE
824R	PEPPERTREE	7	6090708.60	1992320.23	RIGHT LEVEE	51+96.24	1.52	REMOVE
825R	HIND'S BLACK WALNUT	5	6090826.76	1991866.54	RIGHT LEVEE	56+57.12	−45.34	REMOVE

SHEET NOTES:

1. TREE SURVEY LOCATIONS LEFT OF THE ALIGNMENT WILL HAVE A NEGATIVE OFFSET AND RIGHT OF THE ALIGNMENT WILL HAVE A POSITIVE OFFSET.

2. DIAMETER AT BREAST HEIGHT (DBH) WAS RECORDED IN INCHES BY DBH CLASS SIZE AT 4.5 FEET ABOVE GRADE, FOR EACH TRUNK. WHEN A TREE TRUNK FORKED BELOW THE DBH, THE DIAMETER WAS MEASURED AT THE NARROWEST PART OF THE MAIN STEM BELOW THE FORK AND THE LOCATION OF THE MEASUREMENT WAS RECORDED PER STANDARD ARBORICULTURE PROCEDURE. DBH CLASS SIZES INCLUDE:

   0. UNKNOWN DBH
   1. 2 TO 6 INCHES DBH
   2. 7 TO 12 INCHES DBH
   3. 13 TO 18 INCHES DBH
   4. 19 TO 24 INCHES DBH
   5. 25 TO 30 INCHES DBH
   6. 31 TO 36 INCHES DBH
   7. 37 TO 42 INCHES DBH
   8. GREATER THAN 42" DBH

3. MANAGEMENT REQUIREMENTS:
   1. REMOVE – AS A RESULT OF CONSTRUCTION ACTIVITIES AND/OR DUE TO EXTREME OR MAJOR PROBLEMS.
   2. PROTECT – RETAIN AND PREVENT DAMAGE.
   3. INSPECT – TREE WITH QUESTIONABLE HEALTH THAT MAY REQUIRE ADDITIONAL EVALUATION.

4. ONLY TREES DESIGNATED FOR REMOVAL ARE TO BE REMOVED. ALL OTHER TREES ARE TO REMAIN AND SHALL BE PROTECTED UNLESS DIRECTED OTHERWISE BY THE ENGINEER.

TREE DEMOLITION TABLE (SHEET L-15):

TREE SURVEY ID	COMMON NAME	DBH CLASS SIZE	EASTING	NORTHING	ALIGNMENT	STATION	OFFSET (FEET)	TREE MANAGEMENT RECOMMENDATION
175L	BOX ELDER	2	6090060.10	1991360.02	LEFT LEVEE	65+47.11	−14.24	REMOVE
176L	BLUE ELDERBERRY	0	6090052.26	1991373.66	LEFT LEVEE	65+58.83	−3.95	REMOVE
177L	BOX ELDER	3	6090038.04	1991403.48	LEFT LEVEE	65+83.17	18.75	REMOVE
178L	BLUE ELDERBERRY	3	6090007.65	1991419.62	LEFT LEVEE	66+18.76	21.03	REMOVE
179L	VALLEY OAK	1	6089991.13	1991413.69	LEFT LEVEE	66+31.20	8.32	REMOVE
180L	BLUE ELDERBERRY	2	6089978.22	1991442.04	LEFT LEVEE	66+56.92	27.04	REMOVE
181L	BOX ELDER	1	6089985.32	1991428.89	LEFT LEVEE	66+43.75	19.03	REMOVE
182L	COAST LIVE OAK	1	6089968.21	1991437.74	LEFT LEVEE	66+63.67	18.28	REMOVE
183L	VALLEY OAK	1	6089944.75	1991436.62	LEFT LEVEE	66+83.47	5.03	REMOVE
184L	HIND'S BLACK WALNUT	5	6089992.32	1991465.23	LEFT LEVEE	66+56.19	54.17	REMOVE
187L	BLUE ELDERBERRY	0	6089914.55	1991511.87	LEFT LEVEE	67+46.93	46.17	REMOVE
186L	ARROYO WILLOW	2	6089916.81	1991502.43	LEFT LEVEE	67+40.42	38.96	REMOVE
623L	EUCALYPTUS	4	6090648.45	1991451.20	LEFT LEVEE	59+44.85	−24.25	REMOVE
624L	EUCALYPTUS	7	6090550.42	1991414.78	LEFT LEVEE	60+48.82	−13.13	REMOVE
625L	EUCALYPTUS	8	6090324.42	1991349.05	LEFT LEVEE	62+83.69	1.06	REMOVE
626L	EUCALYPTUS	4	6090271.97	1991379.85	LEFT LEVEE	63+35.24	36.68	REMOVE
627L	EUCALYPTUS	1	6090282.69	1991366.38	LEFT LEVEE	63+24.45	22.72	REMOVE
628L	EUCALYPTUS	1	6090293.01	1991365.09	LEFT LEVEE	63+13.71	20.67	REMOVE
629L	GLOSSY PRIVET	2	6090303.75	1991393.82	LEFT LEVEE	62+98.97	48.17	REMOVE
630L	HIND'S BLACK WALNUT	1	6090326.75	1991398.63	LEFT LEVEE	62+73.27	49.69	REMOVE
631L	GLOSSY PRIVET	1	6090352.44	1991414.38	LEFT LEVEE	62+41.97	60.24	REMOVE
632L	GLOSSY PRIVET	1	6090359.99	1991415.70	LEFT LEVEE	62+33.39	59.82	REMOVE
633L	GLOSSY PRIVET	1	6090355.97	1991412.08	LEFT LEVEE	62+38.69	57.23	REMOVE
634L	OAK	1	6090364.09	1991415.91	LEFT LEVEE	62+28.89	59.06	REMOVE
635L	SILVER WATTLE MIMOSA	2	6090488.91	1991464.69	LEFT LEVEE	60+81.61	58.99	REMOVE
636L	EUCALYPTUS	5	6090534.33	1991482.26	LEFT LEVEE	60+33.12	54.46	REMOVE
637L	GLOSSY PRIVET	1	6090534.82	1991478.15	LEFT LEVEE	60+34.52	50.55	REMOVE
638L	GLOSSY PRIVET	1	6090534.30	1991477.57	LEFT LEVEE	60+35.24	50.27	REMOVE
639L	EUCALYPTUS	8	6090575.58	1991504.77	LEFT LEVEE	59+86.16	56.20	REMOVE
641L	GLOSSY PRIVET	1	6090585.29	1991498.10	LEFT LEVEE	59+80.45	45.90	REMOVE
642L	EUCALYPTUS	5	6090629.92	1991518.64	LEFT LEVEE	59+31.34	44.37	REMOVE
680L	FREMONT'S COTTONWOOD	3	6089923.30	1991404.73	LEFT LEVEE	66+84.31	−33.40	INSPECT
681L	FREMONT'S COTTONWOOD	1	6089929.85	1991426.15	LEFT LEVEE	66+88.24	−12.45	REMOVE
682L	FREMONT'S COTTONWOOD	1	6089955.62	1991409.23	LEFT LEVEE	66+60.08	−12.69	REMOVE
683L	VALLEY OAK	1	6089998.56	1991387.42	LEFT LEVEE	66+12.95	−11.93	REMOVE
684L	COAST LIVE OAK	1	6090019.19	1991385.48	LEFT LEVEE	65+93.65	−5.17	REMOVE
685L	BOX ELDER	2	6090079.12	1991351.82	LEFT LEVEE	65+27.05	−16.28	REMOVE
686L	BOX ELDER	4	6090092.46	1991337.70	LEFT LEVEE	65+10.98	−26.25	PROTECT
687L	CALIFORNIA BUCKEYE	1	6090134.21	1991336.81	LEFT LEVEE	64+71.63	−17.74	REMOVE
688L	BLUE ELDERBERRY	0	6090058.81	1991352.89	LEFT LEVEE	65+46.10	−21.41	INSPECT
689L	ARROYO WILLOW	2	6090075.32	1991346.29	LEFT LEVEE	65+29.03	−22.67	PROTECT
690L	ARROYO WILLOW	1	6090094.29	1991339.86	LEFT LEVEE	65+09.82	−23.68	PROTECT
691L	BLUE ELDERBERRY	0	6090105.49	1991337.30	LEFT LEVEE	64+98.80	−23.40	PROTECT
692L	BLUE ELDERBERRY	2	6090148.60	1991360.17	LEFT LEVEE	64+61.81	7.85	REMOVE
693L	HIND'S BLACK WALNUT	1	6090150.56	1991372.84	LEFT LEVEE	64+62.07	20.66	REMOVE
694L	BLUE ELDERBERRY	4	6090129.60	1991361.87	LEFT LEVEE	64+81.02	5.91	REMOVE
695L	CALIFORNIA BUCKEYE	2	6090125.00	1991359.34	LEFT LEVEE	64+85.01	2.47	REMOVE
696L	BOX ELDER	1	6090111.54	1991359.00	LEFT LEVEE	64+98.07	−0.88	REMOVE
697L	COAST LIVE OAK	1	6090081.99	1991366.58	LEFT LEVEE	65+28.52	−1.32	REMOVE
826R	ELM	1	6090393.54	1991603.11	RIGHT LEVEE	61+55.09	7.43	REMOVE
827R	ASH	2	6090224.59	1991473.95	RIGHT LEVEE	63+47.99	−50.06	REMOVE

REV	DESCRIPTION	DATE	APPR.

HDR

DATE: JULY 2015
DESIGN: M. CLARKE
DRAWN: H. SUAREZ
CHECKED: H. HABIG

ENGINEERING CERTIFICATION
LICENSED LANDSCAPE ARCHITECT, HEATH D. HABIG, LIC #L5028, Signature, October 31, 2016, Renewal Date, Date, STATE OF CALIFORNIA
PROJECT ENGINEER DATE

SAN FRANCISQUITO CREEK JOINT POWERS AUTHORITY
ACCEPTED BY DISTRICT
PROJECT ENGINEER DATE

PROJECT NAME AND SHEET DESCRIPTION:
SAN FRANCISQUITO CREEK FLOOD REDUCTION, ECOSYSTEM RESTORATION, & RECREATION PROJECT
TREE DEMOLITION TABLE

SCALE: N.T.S.
VERIFY SCALES: 0 — 1". BAR IS ONE INCH ON ORIGINAL DRAWING. IF NOT ONE INCH ON THIS SHEET, ADJUST SCALES ACCORDINGLY
PROJECT NUMBER: 26284002
SHEET CODE: L-18

USERNAME: BillShad Tue 08 Jul 2008 09:32am
FILENAME: C:\pwworking\sac\d0171341\L10-L19(ICF)

TREE DEMOLITION TABLE (SHEET L-16):

TREE SURVEY ID	COMMON NAME	DBH CLASS SIZE	EASTING	NORTHING	ALIGNMENT	STATION	OFFSET (FEET)	TREE MANAGEMENT RECOMMENDATION
185L	BLUE ELDERBERRY	0	6089933.70	1991497.35	LEFT LEVEE	67+28.01	42.86	REMOVE
282L	WESTERN WHITE ALDER	3	6089489.35	1991581.95	LEFT LEVEE	73+00.60	17.76	PROTECT
283L	BALSAM POPLAR	1	6089486.27	1991609.02	LEFT LEVEE	73+31.52	16.07	PROTECT
284L	WESTERN WHITE ALDER	2	6089465.27	1991640.60	LEFT LEVEE	73+81.92	−6.92	REMOVE
285L	LOMBARDY POPLAR	5	6089383.87	1991666.50	LEFT LEVEE	74+49.49	38.74	REMOVE
286L	LOMBARDY POPLAR	6	6089365.44	1991659.85	LEFT LEVEE	74+65.74	40.90	REMOVE
287L	TREE-OF-HEAVEN	7	6089357.99	1991647.74	LEFT LEVEE	74+76.27	34.14	REMOVE
288L	TREE-OF-HEAVEN	6	6089340.80	1991629.49	LEFT LEVEE	74+97.45	28.83	REMOVE
289L	PAPERBARK	1	6089434.69	1991609.72	LEFT LEVEE	74+21.36	−32.06	PROTECT
358P	BRISBANE BOXTREE	1	6089642.51	1991471.57	LEFT LEVEE	70+34.71	−3.40	REMOVE
359P	BRISBANE BOXTREE	1	6089642.51	1991456.97	LEFT LEVEE	70+20.90	−8.12	REMOVE
360P	BRISBANE BOXTREE	1	6089653.97	1991443.54	LEFT LEVEE	70+04.48	−1.62	REMOVE
361P	PAPERBARK	2	6089587.98	1991437.12	LEFT LEVEE	70+19.75	−66.14	PROTECT
362P	PAPERBARK	2	6089574.26	1991432.01	LEFT LEVEE	71+69.48	−69.02	PROTECT
363P	PAPERBARK	2	6089559.36	1991427.95	LEFT LEVEE	71+84.89	−68.10	PROTECT
587L	BALSAM POPLAR	1	6089533.44	1991642.53	LEFT LEVEE	70+93.87	186.92	REMOVE
588L	WESTERN WHITE ALDER	1	6089522.10	1991617.33	LEFT LEVEE	73+47.61	50.78	REMOVE
589L	WESTERN WHITE ALDER	1	6089530.70	1991589.62	LEFT LEVEE	73+02.31	59.80	INSPECT
590L	WESTERN WHITE ALDER	2	6089532.57	1991572.18	LEFT LEVEE	72+72.80	57.25	PROTECT
591L	BALSAM POPLAR	1	6089540.36	1991565.52	LEFT LEVEE	72+51.97	61.56	PROTECT
592L	BALSAM POPLAR	1	6089556.94	1991548.10	LEFT LEVEE	71+48.75	46.51	PROTECT
593L	PAPERBARK	1	6089439.52	1991585.24	LEFT LEVEE	73+09.78	−31.27	PROTECT
594L	PAPERBARK	1	6089443.67	1991576.53	LEFT LEVEE	73+02.20	−28.21	PROTECT
595L	RIVER SHEOAK	1	6089452.93	1991554.90	LEFT LEVEE	72+82.64	−23.82	PROTECT
596L	RIVER SHEOAK	1	6089470.59	1991530.61	LEFT LEVEE	72+57.51	−16.38	PROTECT
597L	RIVER SHEOAK	1	6089478.75	1991515.29	LEFT LEVEE	72+42.82	−17.70	PROTECT
598L	RIVER SHEOAK	1	6089473.03	1991530.37	LEFT LEVEE	72+56.33	−14.34	PROTECT
599L	RIVER SHEOAK	1	6089465.70	1991551.80	LEFT LEVEE	72+76.60	−12.59	PROTECT
656L	RIVER SHEOAK	1	6089609.09	1991539.13	LEFT LEVEE	70+57.77	63.99	REMOVE
657L	RIVER SHEOAK	1	6089604.10	1991553.95	LEFT LEVEE	70+57.45	79.63	REMOVE
658L	RIVER SHEOAK	3	6089597.26	1991564.51	LEFT LEVEE	70+60.29	91.88	REMOVE
659L	HIND'S BLACK WALNUT	5	6089627.40	1991640.83	LEFT LEVEE	72+00.60	176.18	REMOVE
660L	FREMONT'S COTTONWOOD	2	6089664.29	1991604.24	LEFT LEVEE	69+36.74	158.92	PROTECT
661L	FREMONT'S COTTONWOOD	3	6089642.31	1991585.42	LEFT LEVEE	69+63.49	147.90	PROTECT
662L	FREMONT'S COTTONWOOD	1	6089674.32	1991569.77	LEFT LEVEE	69+37.97	123.04	PROTECT
663L	VALLEY OAK	1	6089664.31	1991598.33	LEFT LEVEE	69+38.57	153.30	PROTECT
664L	BOX ELDER	1	6089666.90	1991526.08	LEFT LEVEE	69+58.67	83.86	PROTECT
665L	BOX ELDER	2	6089677.28	1991532.96	LEFT LEVEE	69+46.66	87.15	PROTECT
666L	BOX ELDER	1	6089695.02	1991519.84	LEFT LEVEE	69+33.90	69.14	PROTECT
667L	BOX ELDER	1	6089700.32	1991524.44	LEFT LEVEE	69+27.43	71.86	PROTECT
668L	SYCAMORE	1	6089736.63	1991524.96	LEFT LEVEE	68+92.77	61.02	PROTECT
669L	BOX ELDER	1	6089754.77	1991524.20	LEFT LEVEE	68+75.78	54.63	PROTECT
670L	BOX ELDER	2	6089791.88	1991507.82	LEFT LEVEE	68+45.63	27.48	PROTECT
672L	BOX ELDER	2	6089787.32	1991517.08	LEFT LEVEE	68+47.07	37.71	PROTECT
673L	BOX ELDER	1	6089740.95	1991544.40	LEFT LEVEE	68+82.59	78.13	PROTECT
674L	BOX ELDER	1	6089688.89	1991553.75	LEFT LEVEE	69+29.13	103.27	PROTECT
675L	COAST LIVE OAK	5	6089832.52	1991516.33	LEFT LEVEE	70+15.61	190.88	REMOVE
676L	COMMON BLUEGUM	7	6089706.40	1991446.39	LEFT LEVEE	69+46.01	−4.18	REMOVE
677L	COMMON BLUEGUM	3	6089726.71	1991442.07	LEFT LEVEE	69+28.08	−14.63	REMOVE
678L	COMMON BLUEGUM	5	6089727.09	1991441.41	LEFT LEVEE	69+27.92	−15.38	REMOVE
679L	COMMON BLUEGUM	8	6089763.65	1991453.56	LEFT LEVEE	68+89.40	−15.24	REMOVE
828R	EUCALYPTUS	3	6089935.98	1991556.61	RIGHT LEVEE	66+19.96	−69.17	REMOVE
829R	EUCALYPTUS	1	6089930.28	1991561.46	RIGHT LEVEE	66+27.29	−67.69	REMOVE
830R	EUCALYPTUS	3	6089934.93	1991556.43	RIGHT LEVEE	66+20.79	−69.84	REMOVE
831R	EUCALYPTUS	8	6089919.62	1991585.37	RIGHT LEVEE	66+48.21	−51.96	REMOVE
832R	EUCALYPTUS	7	6089875.61	1991619.30	RIGHT LEVEE	67+03.16	−43.64	REMOVE
833R	EUCALYPTUS	4	6089861.71	1991628.90	RIGHT LEVEE	67+19.97	−42.00	REMOVE
834R	EUCALYPTUS	1	6089849.68	1991630.42	RIGHT LEVEE	67+31.23	−46.50	REMOVE
835R	EUCALYPTUS	6	6089884.98	1991679.47	RIGHT LEVEE	67+24.16	13.52	REMOVE
836R	EUCALYPTUS	3	6089822.07	1991668.36	RIGHT LEVEE	67+73.77	−26.71	REMOVE
837R	EUCALYPTUS	3	6089814.38	1991669.96	RIGHT LEVEE	67+81.28	−29.06	REMOVE
838R	SIBERIAN ELM	4	6089659.64	1991799.13	RIGHT LEVEE	69+79.25	8.84	REMOVE
839R	SIBERIAN ELM	2	6089637.54	1991796.87	RIGHT LEVEE	69+97.71	−3.26	REMOVE

TREE DEMOLITION TABLE (SHEET L-16 CONT.):

TREE SURVEY ID	COMMON NAME	DBH CLASS SIZE	EASTING	NORTHING	ALIGNMENT	STATION	OFFSET (FEET)	TREE MANAGEMENT RECOMMENDATION
840R	COAST LIVE OAK	2	6089626.06	1991800.96	RIGHT LEVEE	70+10.03	−4.18	REMOVE
841R	BLUE ELDERBERRY	6	6089602.79	1991789.26	RIGHT LEVEE	70+28.54	−23.40	REMOVE
842R	LOMBARDY POPLAR	5	6089515.56	1991791.09	RIGHT LEVEE	71+25.60	−35.41	REMOVE
843R	ACACIA	3	6089481.90	1991810.91	RIGHT LEVEE	71+60.64	−12.95	REMOVE
844R	COAST LIVE OAK	3	6089410.07	1991797.06	RIGHT LEVEE	72+36.39	−6.59	REMOVE
845R	COAST LIVE OAK	2	6089397.67	1991788.83	RIGHT LEVEE	72+51.53	−8.76	REMOVE
846L	ARROYO WILLOW	5	6089693.52	1991644.24	LEFT LEVEE	68+96.48	187.80	REMOVE
846R	COAST LIVE OAK	3	6089389.05	1991783.88	RIGHT LEVEE	72+61.79	−9.13	REMOVE
847L	ARROYO WILLOW	3	6089689.89	1991648.77	LEFT LEVEE	68+98.52	193.23	REMOVE
847R	COAST LIVE OAK	1	6089386.55	1991782.56	RIGHT LEVEE	72+64.71	−9.07	REMOVE
848L	ARROYO WILLOW	2	6089698.65	1991668.51	LEFT LEVEE	68+84.02	209.25	REMOVE
848R	COAST LIVE OAK	8	6089367.85	1991792.33	RIGHT LEVEE	72+75.86	8.85	REMOVE
849L	CALIFORNIA BAY LAUREL	2	6089664.97	1991660.18	LEFT LEVEE	69+18.63	211.85	REMOVE
849R	HIND'S BLACK WALNUT	0	6089311.14	1991752.20	RIGHT LEVEE	73+44.57	9.48	REMOVE
850L	CALIFORNIA BAY LAUREL	2	6089655.56	1991663.91	LEFT LEVEE	71+91.27	211.38	REMOVE
851L	ARROYO WILLOW	1	6089696.18	1991660.87	LEFT LEVEE	68+88.77	202.76	REMOVE

SHEET NOTES:

1. TREE SURVEY LOCATIONS LEFT OF THE ALIGNMENT WILL HAVE A NEGATIVE OFFSET AND RIGHT OF THE ALIGNMENT WILL HAVE A POSITIVE OFFSET.

2. DIAMETER AT BREAST HEIGHT (DBH) WAS RECORDED IN INCHES BY DBH CLASS SIZE AT 4.5 FEET ABOVE GRADE, FOR EACH TRUNK. WHEN A TREE TRUNK FORKED BELOW THE DBH, THE DIAMETER WAS MEASURED AT THE NARROWEST PART OF THE MAIN STEM BELOW THE FORK AND THE LOCATION OF THE MEASUREMENT WAS RECORDED PER STANDARD ARBORICULTURE PROCEDURE. DBH CLASS SIZES INCLUDE:

   0. UNKNOWN DBH
   1. 2 TO 6 INCHES DBH
   2. 7 TO 12 INCHES DBH
   3. 13 TO 18 INCHES DBH
   4. 19 TO 24 INCHES DBH
   5. 25 TO 30 INCHES DBH
   6. 31 TO 36 INCHES DBH
   7. 37 TO 42 INCHES DBH
   8. GREATER THAN 42" DBH

3. MANAGEMENT REQUIREMENTS:
   1. REMOVE – AS A RESULT OF CONSTRUCTION ACTIVITIES AND/OR DUE TO EXTREME OR MAJOR PROBLEMS.
   2. PROTECT – RETAIN AND PREVENT DAMAGE.
   3. INSPECT – TREE WITH QUESTIONABLE HEALTH THAT MAY REQUIRE ADDITIONAL EVALUATION.

4. ONLY TREES DESIGNATED FOR REMOVAL ARE TO BE REMOVED. ALL OTHER TREES ARE TO REMAIN AND SHALL BE PROTECTED UNLESS DIRECTED OTHERWISE BY THE ENGINEER.

REV	DESCRIPTION	DATE	APPR.

HDR

DATE	JULY 2015
DESIGN	M. CLARKE
DRAWN	H. SUAREZ
CHECKED	H. HABIG

ENGINEERING CERTIFICATION

LICENSED LANDSCAPE ARCHITECT
HEATH D. HABIG LIC #LA5028
Signature
October 31, 2016
Renewal Date
Date
STATE OF CALIFORNIA

PROJECT ENGINEER DATE

SAN FRANCISQUITO CREEK
JOINT POWERS AUTHORITY

ACCEPTED BY DISTRICT

PROJECT ENGINEER DATE

PROJECT NAME AND SHEET DESCRIPTION:

SAN FRANCISQUITO CREEK FLOOD REDUCTION, ECOSYSTEM RESTORATION, & RECREATION PROJECT

TREE DEMOLITION TABLE

SCALE: N.T.S.

VERIFY SCALES
0 1"
BAR IS ONE INCH ON ORIGINAL DRAWING
IF NOT ONE INCH ON THIS SHEET, ADJUST SCALES ACCORDINGLY

PROJECT NUMBER: 26284002

SHEET CODE: L-19

DOCUMENT NUMBER: SFC_LP-C-1028-XXXXXX

GENERAL IRRIGATION NOTES

1. SEE TECHNICAL SPECIFICATIONS AND GENERAL NOTES FOR ADDITIONAL INFORMATION TO CONSIDER IN IRRIGATION SYSTEM INSTALLATION INCLUDING INFRASTRUCTURE AND UTILITIES PROTECTION AND REPAIR INFORMATION.
2. IRRIGATION MAINLINE AND EQUIPMENT ARE SHOWN DIAGRAMMATICALLY TO CONVEY INSTALLATION INTENT WITH GRAPHIC CLARITY. THE CONTRACTOR SHALL NOT INSTALL THE IRRIGATION SYSTEM AS DIAGRAMMATICALLY SHOWN IF OBSTRUCTIONS, INFRASTRUCTURE, GRADE CHANGES, OR OTHER BARRIERS EXIST IN THE FIELD THAT MIGHT NOT HAVE BEEN FORESEEN, CONSIDERED, OR IN EXISTENCE DURING IRRIGATION DESIGN. NOTIFY ENGINEER IF THE INSTALLATION OF THE SYSTEM IS NOT FEASIBLE AS DIAGRAMMATICALLY SHOWN PRIOR TO PROCEEDING. IF CONFLICTS ARE NOT REPORTED TO THE ENGINEER, THE CONTRACTOR SHALL ASSUME FULL RESPONSIBILITY FOR ANY NECESSARY CHANGES REQUIRED TO MAKE THE SYSTEM FULLY FUNCTIONAL AT NO ADDITIONAL COST TO OWNER.
3. CONTRACTOR SHALL VERIFY STATIC WATER PRESSURE AT POINT OF CONNECTION PRIOR TO INSTALLING IRRIGATION SYSTEM. SHOULD STATIC WATER PRESSURE BE LESS THAN 80 PSI, CONTRACTOR SHALL NOTIFY ENGINEER FOR INSTRUCTIONS PRIOR TO PROCEEDING WITH INSTALLATION. THE SYSTEM DESIGN IS BASED ON 40 GPM BEING AVAILABLE AT THE POINT OF CONNECTION. THE CONTRACTOR IS RESPONSIBLE FOR VERIFYING THESE REPORTED READINGS PRIOR TO CONSTRUCTION AND SHALL CEASE CONSTRUCTION ACTIVITY AT ONCE IF AVAILABLE WATER PRESSURE AND VOLUME VARY FROM PREVIOUSLY REPORTED FIGURES. IF WATER PRESSURE AND VOLUME DISCREPANCIES ARE NOT REPORTED TO THE ENGINEER PRIOR TO START OF CONSTRUCTION, THE CONTRACTOR SHALL ASSUME FULL RESPONSIBILITY FOR ANY NECESSARY CHANGES REQUIRED TO MAKE THE SYSTEM FULLY FUNCTIONAL AT NO ADDITIONAL COST TO OWNER.
4. CONTRACTOR SHALL VERIFY LOCATIONS OF EXISTING UTILITIES PRIOR TO CONSTRUCTION.
5. FOLLOW ALL LOCAL CODES WHEN INSTALLING IRRIGATION SYSTEM. FOLLOW MANUFACTURER'S SPECIFICATIONS DURING INSTALLATION. NOTIFY ENGINEER OF ANY CODE CONFLICTS WITH THE DESIGN PRIOR TO STARTING WORK.
6. ALL MATERIALS AND EQUIPMENT SHALL BE NEW. THE CONTRACTOR SHALL INSTALL MATERIALS AND EQUIPMENT TO PROVIDE THE MOST EFFICIENT AND OPTIMUM OPERATING SYSTEM. FIELD ADJUSTMENTS MAY BE REQUIRED.
7. ALL TRENCHING IN AREAS UNDER EXISTING TREE CANOPIES SHALL BE DONE BY HAND, WITH CARE TAKEN NOT TO DAMAGE THE ROOT SYSTEMS OF THESE TREES. DO NOT WATER CALIFORNIA NATIVE OAK TREES DURING THE DRY SEASON. TREES THAT DIE DURING THE CONSTRUCTION OR MAINTENANCE PERIOD SHALL BE REPLACED BY THE CONTRACTOR AT NOT COST TO THE OWNER AT THEIR CURRENT SIZE.
8. TRENCHES AND CONTROL VALVES SHALL BE LOCATED AT THE BACK OF MAINTENANCE ROAD, WALKWAY, OR TRAIL WHEREVER POSSIBLE. TRENCHES AND CONTROL VALVES SHALL BE LOCATED 12" FROM MAINTENANCE ROAD, SIDEWALKS, TRAILS, OR WALLS UNLESS NOTED OTHERWISE.
9. MAXIMUM WIRE RUN DISTANCE BETWEEN BATTERY CONTROLLER AND CONTROL VALVE SHALL BE 100 FEET USING 18 AWG WIRE.
10. CONTRACTOR SHALL PRESSURE AND LEAK TEST IRRIGATION LINES PRIOR TO BACKFILLING TRENCHES. THE CONTRACTOR SHALL MAKE ANY ADJUSTMENTS REQUIRED TO SYSTEM TO ENSURE OPERABILITY PRIOR TO BACKFILLING TRENCHES.
11. THE LOCATION OF THE AUTOMATIC CONTROLLERS SHALL BE MARKED WITH A 36" WOODEN STAKE.
12. ALL IRRIGATION COMPONENTS SHALL BE PURPLE IN COLOR WHEN AVAILABLE.
13. THE CONTRACTOR SHALL PROVIDE THE ENGINEER ONE OPERATING KEY, TWO SETS OF LOCKING COVER KEYS, AND ONE HOSE SWIVEL FOR QUICK COUPLING VALVES.
14. THE CONTRACTOR SHALL INCLUDE IN THEIR BID 50 EXTRA IRRIGATION EMITTERS FOR USE IN THE INSTALLATION PROCESS FOR POSSIBLE FIELD CHANGES. ALL EXTRA IRRIGATION COMPONENTS SHALL BE GIVEN TO THE ENGINEER AT THE END OF THE MAINTENANCE PERIOD.
15. IRRIGATION CONTROLLER OPERATION TO BE DETERMINED BY THE CITY OF PALO ALTO GOLF COURSE.
16. PRIOR TO TRENCHING, CALL UNDERGROUND SERVICE ALERT, (800) 642-2444 FOR NORTHERN CALIFORNIA.
17. SHOULD THERE BE DROUGHT CONDITIONS, THE MITIGATION DRAINAGE DITCH PLANTINGS SHALL BE SUPPLEMENTAL IRRIGATED UP TO TWICE PER MONTH NOVEMBER 1 – APRIL 30 PER THE ENGINEER; WATER SHALL BE APPLIED WITH A NON-TRACK MOUNTED TRUCK EQUIPPED WITH A SIDE SPRAY WATER CANNON CAPABLE OF SPRAYING 100 FEET; ACCESS WILL BE ALONG THE SOUTHERN RIM; APPLY 15,000 GALLONS OF WATER TOTAL TO THE BASIN EACH IRRIGATION APPLICATION; WATER WILL BE SUPPLY BY THE CITY FROM A WATER HYDRANT ON WEST JACK LONDON BLVD.

IRRIGATION LEGEND

DETAIL REFERENCE	PLAN VIEW SYMBOL	APPURTENANCE	MODEL NUMBER	MANUFACTURER/NOTES
1&2/L-22	M	NEW METER AT IRRIGATION POINT OF CONNECTION (POC)		TIE INTO EXISTING WATER LINE STUBS AS SHOWN ON THE PLANS; INSTALL 1" POTABLE WATER METER PER CITY OF PALO ALTO SPECIFICATION SECTION 02660 AND PER CITY STANDARD DETAILS W-02-B, WD-01, WGW-02 AND WGW-04
1/L-22		SYSTEM FILTER	AF 1.5-150	ACTION MACHINING 90 DEGREE LANDSCAPE FILTER, OR APPROVED EQUAL, WITH 150 MESH SCREEN INSTALLED IN RECTANGLE BOX WITH PURPLE LOCKING LID
2/L-22	A	BATTERY OPERATED CONTROLLER	NODE-100 (1-STATION) NODE-200 (2-STATION)	HUNTER BATTERY OPERATED CONTROLLER; INSTALL IN GRADE LEVEL ENCLOSURE DIRECTLY ADJACENT TO CONTROL VALVE BOX.
3/L-22		GATE VALVE	T-113-K	NIBCO GATE VALVE, OR APPROVED EQUAL, (LINE SIZE) IN ROUND BOX WITH PURPLE LOCKING LID
4/L-22		BALL VALVE	BTU-(LINE SIZE)	KING BROTHERS, SCH 80 BLOCKED TRUE UNION BALL VALVE OR APPROVED EQUAL
4/L-22		CONTROL VALVE WITH PRESSURE REGULATING FILTER	100-PESB PRB-100	RAINBIRD, 100-PESB-R, 1" CONTROL VALVE, WITH RAINBIRD PRB-100, 1" PRESSURE REGULATING BASKET FILTER; INSTALL BASKET FILTER DOWNSTREAM OF VALVE; INSTALL DC LATCHING SOLENOID (RAINBIRD TBOSPSOL) TO CONNECT TO HUNTER BATTERY OPERATED CONTROLLER; VALVE LOCATIONS ON PLANS ARE APPROXIMATE TO SHOW CLUSTERING
5/L-22		QUICK COUPLING VALVE	33-DLRC	RAIN BIRD / 3/4" QUICK COUPLING VALVE, OR APPROVED EQUAL, WITH LOCKING COVER IN ROUND VALVE BOX
6/L-22	NOT SHOWN	DRIP EMITTER	XB-20PC-1032 W/ PFR-FRA	RAIN BIRD / XERI-BUG PRESSURE COMPENSATING EMITTER WITH 10-32 THREADED INLET, 1.0 GPH, INSTALL ON RAIN BIRD 12" POLYFLEX RISER, OR APPROVED EQUAL; INSTALL 2 PER INDIVIDUAL PLANT
L-24 TO L-29		MAINLINE		IRRIGATION MAINLINE, SCH 40 PVC PIPE, 2" SIZE THROUGHOUT, 4" GALVANIZED PIPE ACROSS BRIDGE. PIPELINE CROSSING LEVEES SHALL HAVE 24" MINIMUM COVER AT THE LEVEE CROWN AND 12" MINIMUM COVER AT THE LEVEE SIDE SLOPE, 18" MINIMUM BURIAL ELSEWHERE, INSTALL WARNING TAPE ABOVE LINE, INSTALL PER SPECIFICATIONS
7/L-22	NOT SHOWN	LATERAL		¾" IRRIGATION LATERAL, SCH 40 PVC PIPE, 12" MINIMUM BURIAL, PLACE PARALLEL WITH SLOPE CONTOURS. LATERALS SHALL NOT OCCUR WITHIN LEVEE FOOTPRINT. INSTALL PER SPECIFICATIONS
		PVC TO PE CONNECTION		1" PVC SCHEDULE 40 UNLESS OTHERWISE NOTED

26.5	FLOW THROUGH VALVE
4	VALVE NUMBER
1.5"	SIZE OF VALVE

LATERAL PIPE SIZING CHART

NUMBER OF EMITTERS	1-30	31-90	91-180	181-270	271-600
PIPE SIZE	3/4"	1"	1-1/4"	1-1/2"	2"

USERNAME: BillShad Tue 08 Jul 2008 09:32am
FILENAME: C:\pwworking\sec\d0171341\L20-L29(ICF)

DOCUMENT NUMBER:SFC_LP-C-1028-XXXXXXX

REV	DESCRIPTION	DATE	APPR.

HDR

DATE JULY 2015
DESIGN M. CLARKE
DRAWN H. SUAREZ
CHECKED H. HABIG

ENGINEERING CERTIFICATION
LICENSED LANDSCAPE ARCHITECT HAROLD HABIG LIC. #3000 STATE OF CALIFORNIA
Expiration October 31, 2010 Renewal Date
Date
PROJECT ENGINEER DATE

SAN FRANCISQUITO CREEK JOINT POWERS AUTHORITY
ACCEPTED BY DISTRICT
PROJECT ENGINEER DATE

PROJECT NAME AND SHEET DESCRIPTION:
SAN FRANCISQUITO CREEK FLOOD REDUCTION, ECOSYSTEM RESTORATION, & RECREATION PROJECT
IRRIGATION NOTES & LEGEND

SCALE NOT TO SCALE
VERIFY SCALES 0 1"
BAR IS ONE INCH ON ORIGINAL DRAWING IF NOT ONE INCH ON THIS SHEET, ADJUST SCALES ACCORDINGLY

PROJECT NUMBER 26284002
SHEET CODE: L-20
SHEET NUMBER: 116 OF 126

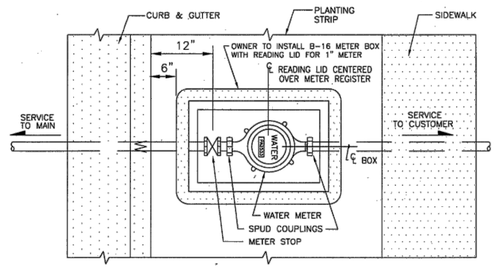

PLAN

GUIDELINES FOR WATER METER INSTALLATION:

THESE GUIDELINES ARE IN ACCORDANCE WITH THE CITY OF PALO ALTO'S RULES AND REGULATIONS 21.E AND THE UNIFORM PLUMBING CODE.

1. THE CITY WILL PROVIDE A METER (5/8", 1", 1-1/2", OR 2"), SPUD COUPLINGS, FLANGES, GASKETS, AND WASHERS. IT IS THE CUSTOMER'S RESPONSIBILITY TO MAKE THE DOWNSTREAM METER CONNECTION.
2. ALL METERS WILL BE INSTALLED WITHIN THREE WORKING DAYS FROM THE DATE THE METER REQUEST IS PROCESSED BY UTILITY ENGINEERING AND THE BUSINESS OFFICE.
3. WATER METER UPGRADES – ALL REQUESTS FOR UPGRADES MUST BE PROCESSED THROUGH UTILITY ENGINEERING.
4. THE LOCATION OF THE METER BOX MUST BE IN ITS PERMANENT POSITION (AT GRADE, LEVEL AND CENTERED) BEFORE THE METER IS INSTALLED.
5. WATER METER BOX REPLACEMENT ON EXISTING SERVICE – THE CITY WILL FURNISH NEW METER BOX & COVER. IT IS THE CUSTOMER'S RESPONSIBILITY TO INSTALL NEW BOX AT FINISHED GRADE.
6. IT IS THE CUSTOMER'S RESPONSIBILITY TO KEEP THE METER BOX AT GRADE, LEVEL AND FREE OF ALL VEGETATION.
7. ALL WATER METERS HAVE DIFFERENT SIZE BOXES: 5/8"–B9, 1"–B16, 1½"–B30, AND 2"–B36
8. ANY QUESTIONS REGARDING THE ABOVE REFERENCED INFORMATION SHOULD BE DIRECTED TO THE ATTENTION OF THE WATER METER SHOP.

BY	DATE	WATER METER & BOX INSTALLATION STANDARD DETAIL	APPROVED: JUNE 8, 1998 ROGER CWIAK CHIEF ENGINEER R.E. NO. 34533	SCALE: NONE
DRAWN J.J.	8/93			DWG. NO. STD. WD-02-B
CHECKED R.E.	3/98			
REVIEWED J.J.	6/98	CITY OF PALO ALTO, CALIFORNIA	REVISION: JUNE 29, 2005	APPENDIX B

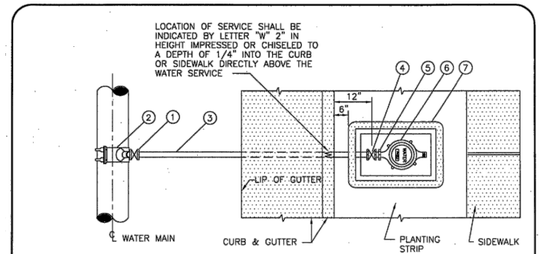

* NOTE: METER LOCATION WHERE SIDEWALK & CURB ARE INTEGRAL IS AT BACK OF SIDEWALK INSTEAD OF BACK OF CURB AS SHOWN

PLAN

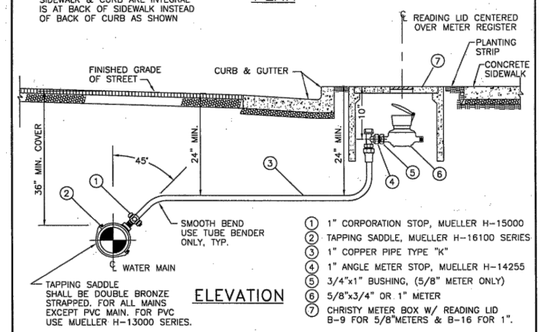

ELEVATION

1. 1" CORPORATION STOP, MUELLER H-15000
2. TAPPING SADDLE, MUELLER H-16100 SERIES
3. 1" COPPER PIPE TYPE "K"
4. 1" ANGLE METER STOP, MUELLER H-14255
5. 3/4"x1" BUSHING, (5/8" METER ONLY)
6. 5/8"x3/4" OR 1" METER
7. CHRISTY METER BOX W/ READING LID B-9 FOR 5/8"METERS & B-16 FOR 1".

BY	DATE	1" WATER SERVICE CONNECTION STANDARD DETAIL	APPROVED: OCTOBER 30 1992 ROGER CWIAK CHIEF ENGINEER R.E. NO. 34533	SCALE: NONE
DRAWN J.J.	2/92			DWG. NO. STD. WD-01
CHECKED J.J.	5/92			
REVIEWED R.C.	10/92	CITY OF PALO ALTO, CALIFORNIA	REVISION: JUNE 8, 1998	APPENDIX B

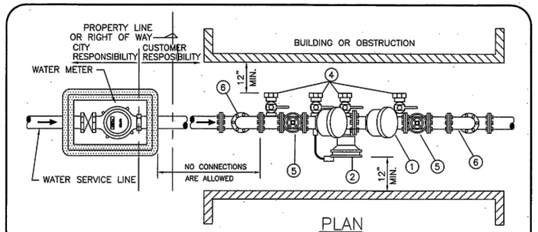

PLAN

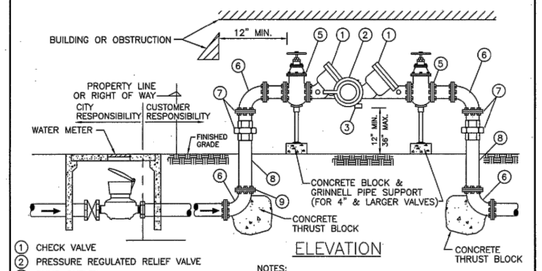

ELEVATION

1. CHECK VALVE
2. PRESSURE REGULATED RELIEF VALVE
3. DUMP OUTLET
4. TEST COCK, 4 REQUIRED
5. GATE VALVE OR BALL VALVE
6. 90° ELBOW
7. FLANGE OR UNION
8. DUCTILE IRON OR COPPER PIPE
9. BURIED JOINTS SHALL BE PLASTIC WRAPPED FLANGE & CORE TEN BOLTS OR MEGALUG

NOTES:

1. ALL DEVICES SHALL BE APPROVED BY WATER–GAS–WASTEWATER UTILITIES DEPARTMENT.
2. THE DEVICE SHALL BE INSTALLED ON THE OWNER'S PROPERTY AND ADJACENT TO THE METER.
3. INSPECTION BY UTILITES CROSS CONNECTION IS REQUIRED FOR SUPPLY PIPE BETWEEN THE METER AND THE VALVES.
4. APPROVED RPPA ASSEMBLIES, SEE SECTION 02660. OF THESE STANDARDS

BY	DATE	REDUCED PRESSURE PRINCIPLE ASSEMBLY – RPPA STANDARD DETAIL	APPROVED: OCTOBER 30 1992 ROGER CWIAK CHIEF ENGINEER R.E. NO. 34533	SCALE: NONE
DRAWN J.J.	8/92			DWG. NO. STD. WD-17
CHECKED J.J.	8/92			
REVIEWED R.E.	4/98	CITY OF PALO ALTO, CALIFORNIA	REVISION: JUNE 8, 1998	APPENDIX B

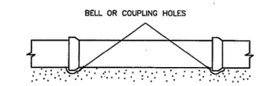

PROVIDE UNIFORM AND CONTINUOUS SUPPORT OF PIPE BARREL BETWEEN BELL OR COUPLING HOLES FOR ALL CLASSES OF BEDDING.

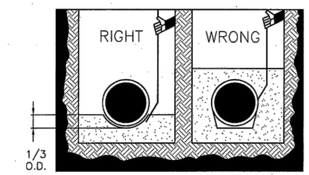

PLACE BACKFILL TO SPRINGLINE AND SHOVEL SLICE TO FORM DENSE COMPACTED HAUNCH SUPPORT TO 1/3 THE OUTSIDE DIAMETER OF THE PIPE.

BY	DATE	PIPE BEDDING STANDARD DETAIL	APPROVED: OCTOBER 30 1992 ROGER CWIAK CHIEF ENGINEER R.E. NO. 34533	SCALE: NONE
DRAWN R.F.	5/92			DWG. NO. STD. WGW-04
CHECKED E.W.	6/92			
REVIEWED R.C.	6/92	CITY OF PALO ALTO, CALIFORNIA	REVISION: MAY 16, 2005	APPENDIX A

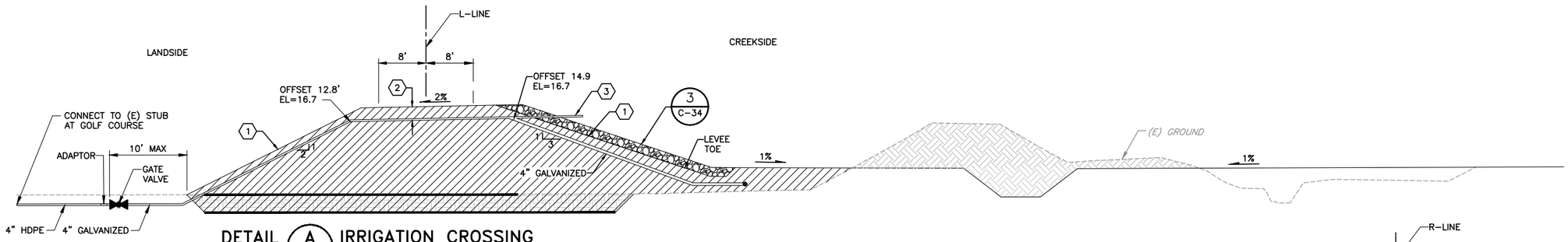

DETAIL A L-19 IRRIGATION CROSSING NTS (L-LINE) STA 28+00

KEY NOTE:

1. 12" COVER AT LEVEE SIDE SLOPES. PIPE SHALL MAINTAIN A 2H:1V LANDSIDE AND A 3H:1V CREEKSIDE SLOPE FROM THE OFFSET AND ELEVATION SHOWN.
2. 24" COVER AT LEVEE CROWN.
3. 4" GALVANIZED PIPE. CONNECT TO BOARDWALK. SEE SHEET S-6
4. 4" GALVANIZED PIPE CROSSING AT (E) FRIENDSHIP BRIDGE. SEE SHEET S-12.

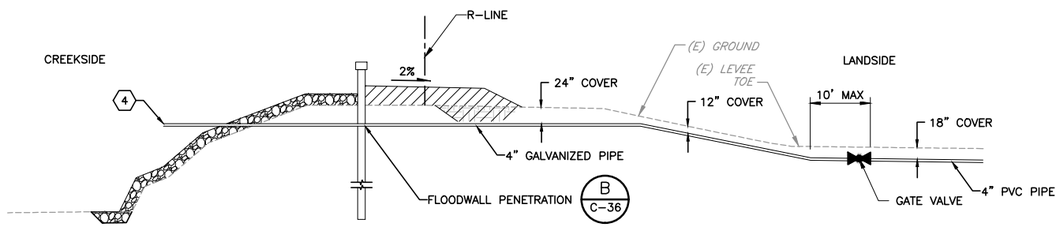

DETAIL B L-19 IRRIGATION CROSSING NTS (R-LINE) STA 29+32

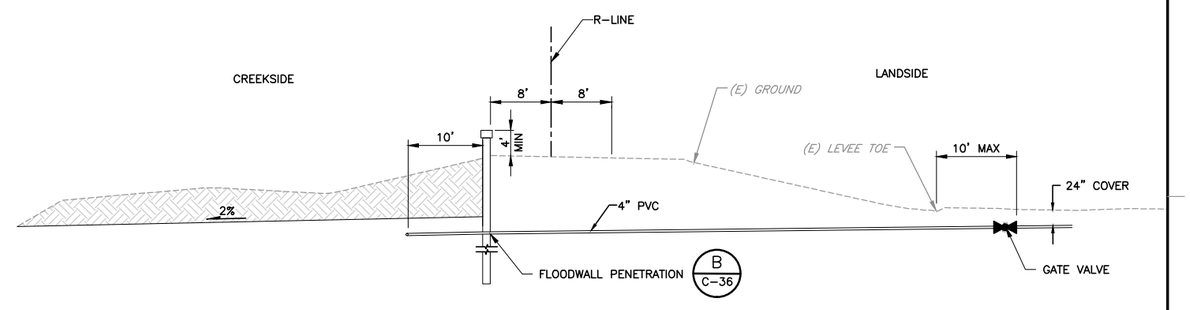

DETAIL C L-21 IRRIGATION CROSSING NTS (R-LINE) STA 56+50

REV	DESCRIPTION	DATE	APPR.

HDR

DATE JULY 2015
DESIGN M. CLARKE
DRAWN H. SUAREZ
CHECKED H. HABIG

ENGINEERING CERTIFICATION: LICENSED LANDSCAPE ARCHITECT HEARTH HABIG LIC. 2608 Signature October 31, 2016 Renewal Date Date STATE OF CALIFORNIA

PROJECT ENGINEER DATE

SAN FRANCISQUITO CREEK JOINT POWERS AUTHORITY

ACCEPTED BY DISTRICT

PROJECT ENGINEER DATE

PROJECT NAME AND SHEET DESCRIPTION:

SAN FRANCISQUITO CREEK FLOOD REDUCTION, ECOSYSTEM RESTORATION, & RECREATION PROJECT

CITY STANDARD IRRIGATION DETAILS
IRRIGATION CROSSING DETAILS

SCALE: NOT TO SCALE

VERIFY SCALES: 0 1" BAR IS ONE INCH ON ORIGINAL DRAWING IF NOT ONE INCH ON THIS SHEET, ADJUST SCALES ACCORDINGLY

PROJECT NUMBER: 26284002

SHEET CODE: L-21

SHEET NUMBER: 117 OF 126

DOCUMENT NUMBER: SFC_LP-C-1028-XXXXXXX

USERNAME: BillShad Tue 08 Jul 2008 09:32am
FILENAME: C:\pwworking\sec\d0171341\L20-L29(CF)

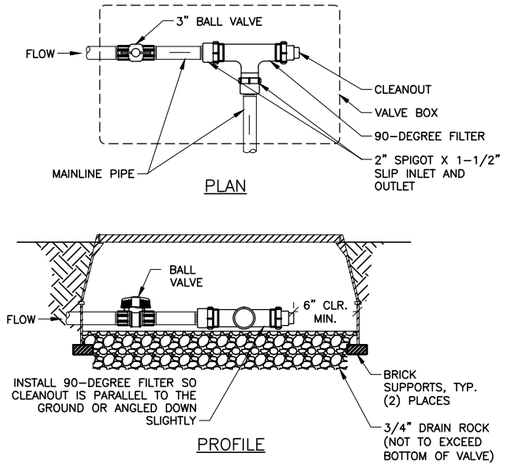

DETAIL 1 / L-20 SYSTEM FILTER

NTS

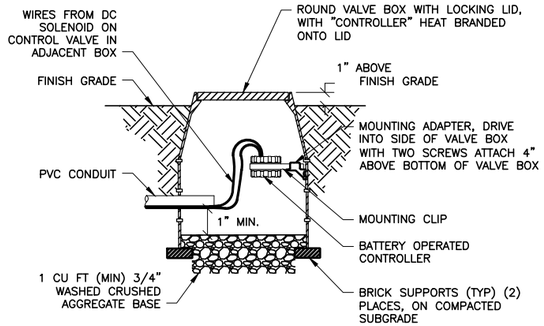

NOTES:

1. REFER TO IRRIGATION LEGEND FOR MANUFACTURERS AND MODELS.
2. INSTALL VALVE BOX SO THAT TOP OF BOX IS FLUSH WITH ADJACENT HARDSCAPE.
3. PLACE 3/4" DRAIN ROCK PRIOR TO INSTALLING VALVE BOX.
4. REFER TO SPECIFICATIONS AND PLAN SHEETS FOR ADDITIONAL INFORMATION.

DETAIL 2 / L-20 BATTERY OPERATED CONTROLLER

NTS

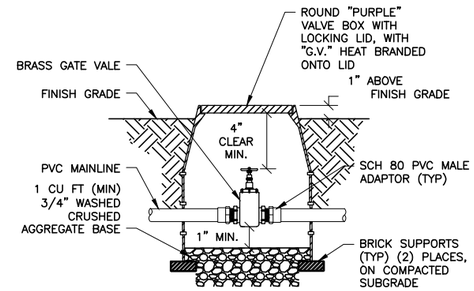

NOTES:

1. REFER TO IRRIGATION LEGEND FOR MANUFACTURERS AND MODELS.
2. INSTALL GATE VALVE A MINIMUM OF 12" FROM STRUCTURES OR HARDSCAPE.
3. INSTALL GATE VALVE IN PLANTING BEDS WHEREVER POSSIBLE.
4. INSTALL VALVE BOX SO THAT TOP OF BOX IS FLUSH WITH ADJACENT HARDSCAPE.
5. USE TEFLON TAPE ON ALL THREADED FITTINGS.
6. PLACE 3/4" DRAIN ROCK PRIOR TO INSTALLING VALVE BOX.
7. REFER TO SPECIFICATIONS AND PLAN SHEETS FOR ADDITIONAL INFORMATION.

DETAIL 3 / L-20 GATE VALVE

NTS

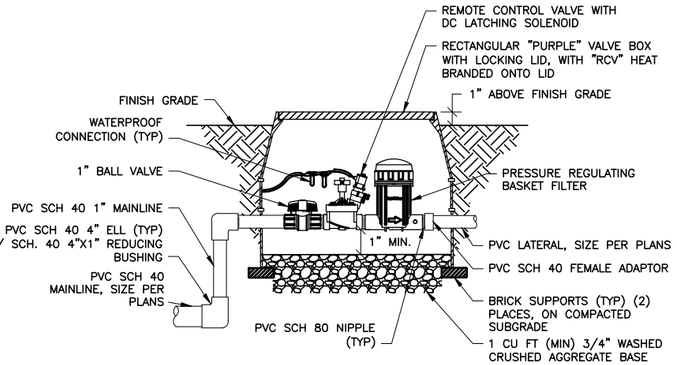

NOTES:

1. REFER TO IRRIGATION LEGEND FOR MANUFACTURERS AND MODELS.
2. INSTALL VALVE BOX SO THAT TOP OF BOX IS FLUSH WITH ADJACENT HARDSCAPE.
3. USE TEFLON TAPE ON ALL THREADED FITTINGS.
4. PLACE 3/4" DRAIN ROCK PRIOR TO INSTALLING VALVE BOX.
5. REFER TO SPECIFICATIONS AND PLAN SHEETS FOR ADDITIONAL INFORMATION.

DETAIL 4 / L-20 CONTROL VALVE WITH FILTER AND BALL VALVE

NTS

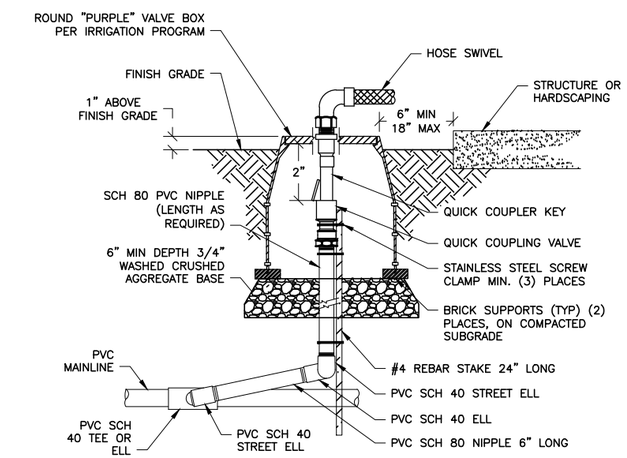

NOTES:

1. REFER TO IRRIGATION LEGEND FOR MANUFACTURERS AND MODELS.
2. INSTALL QUICK COUPLING VALVE IN PLANTING BEDS WHEREVER POSSIBLE.
3. INSTALL VALVE BOX SO THAT TOP OF BOX IS FLUSH WITH ADJACENT HARDSCAPE.
4. USE TEFLON TAPE ON ALL THREADED FITTINGS.
5. PLACE 3/4" DRAIN ROCK PRIOR TO INSTALLING VALVE BOX.
6. REFER TO SPECIFICATIONS AND PLAN SHEETS FOR ADDITIONAL INFORMATION.

DETAIL 5 / L-20 QUICK COUPLING VALVE

NTS

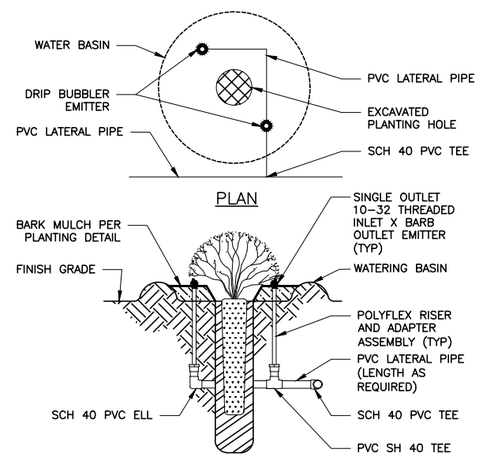

NOTES:

1. INSTALL 2 PER INDIVIDUAL PLANT IN ALL PLANTING ZONES.
2. LATERAL PIPE SHALL BE A MIN OF 2" AWAY FROM ROOTBALL.
3. REFER TO IRRIGATION LEGEND FOR MANUFACTURERS AND MODELS AND NUMBER OF EMITTERS TO INSTALL AT EACH LOCATION.
4. REFER TO SPECIFICATIONS AND PLAN SHEETS FOR ADDITIONAL INFORMATION.

DETAIL 6 / L-20 DRIP EMITTER

NTS

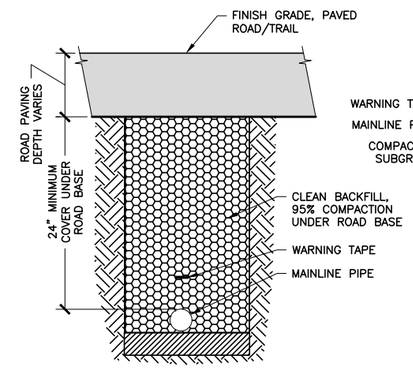

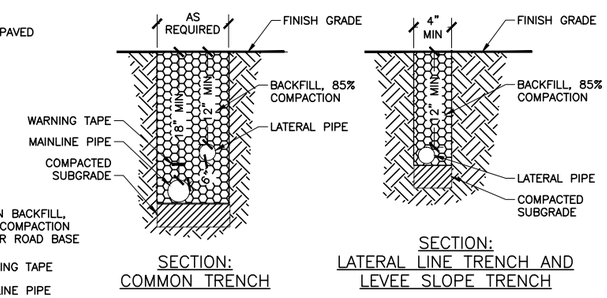

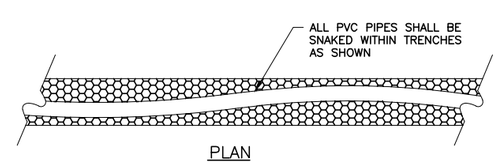

NOTES:

1. REFER TO IRRIGATION LEGEND FOR MANUFACTURERS AND MODELS.
2. TRENCH DEPTHS ARE MEASURED FROM TOP OF FINISHED GRADE.
3. FOR PIPES INSTALLED WITHIN LEVEE FOOTPRINT, TRENCH SIDE SLOPES MAY NOT BE STEEPER THAN 1H:1V. THE BOTTOM WIDTH OF THE TRENCHES WITHIN THE LEVEE FOOTPRINT SHALL BE 2 FT WIDER THAN THE DIAMETER OF THE PIPE OR TWO TIMES THE PIPE DIAMETER, WHICHEVER IS GREATER.
4. ALL PIPE TO BE INSTALLED IN ACCORDANCE WITH MANUFACTURER'S INSTALLATION SPECIFICATIONS.
5. BACKFILL TRENCHES, AFTER SYSTEM HAS BEEN CHARGED TO TEST FOR LEAKS, WITH CLEAN BACKFILL.
6. REFER TO SPECIFICATIONS AND PLAN SHEETS FOR ADDITIONAL INFORMATION.
7. PIPE INSTALLED WITHIN THE LEVEE FOOTPRINT OR WITHIN 10 FT OF THE LEVEE TOE SHALL BE BACKFILLED WITH 4"-6" COMPACTED TO A MINIMUM OF 90% PER ASTM D1557 OR 97% PER ASTM D698.

DETAIL 7 / L-20 PIPE TRENCHING

NTS

REV	DESCRIPTION	DATE	APPR.

HDR

DATE	ENGINEERING CERTIFICATION
JULY 2015	LICENSED LANDSCAPE ARCHITECT REALD MAGIC LAC 4508 Signature October 31, 2016 Renewal Date Date STATE OF CALIFORNIA
DESIGN M. CLARKE	
DRAWN H. SUAREZ	
CHECKED H. HABIG	PROJECT ENGINEER DATE

SAN FRANCISQUITO CREEK JOINT POWERS AUTHORITY

ACCEPTED BY DISTRICT

PROJECT ENGINEER DATE

PROJECT NAME AND SHEET DESCRIPTION:

SAN FRANCISQUITO CREEK FLOOD REDUCTION, ECOSYSTEM RESTORATION, & RECREATION PROJECT

IRRIGATION DETAILS

SCALE	PROJECT NUMBER
NOT TO SCALE	26284002
VERIFY SCALES 0 1" BAR IS ONE INCH ON ORIGINAL DRAWING IF NOT ONE INCH ON THIS SHEET, ADJUST SCALES ACCORDINGLY	SHEET CODE: L-22
	SHEET NUMBER: 118 OF 126

DOCUMENT NUMBER: SFC_LP-C-1028-XXXXXXX

USERNAME: BillShad Tue 08 Jul 2008 09:32am
FILENAME: C:\pwworking\sec\d0171341\L20-L29(IGF)

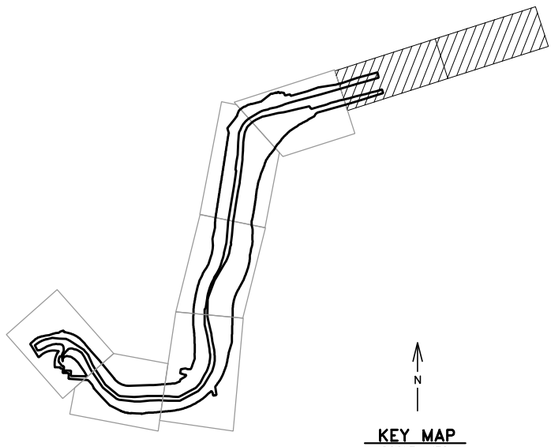

N

KEY MAP
SCALE: NTS

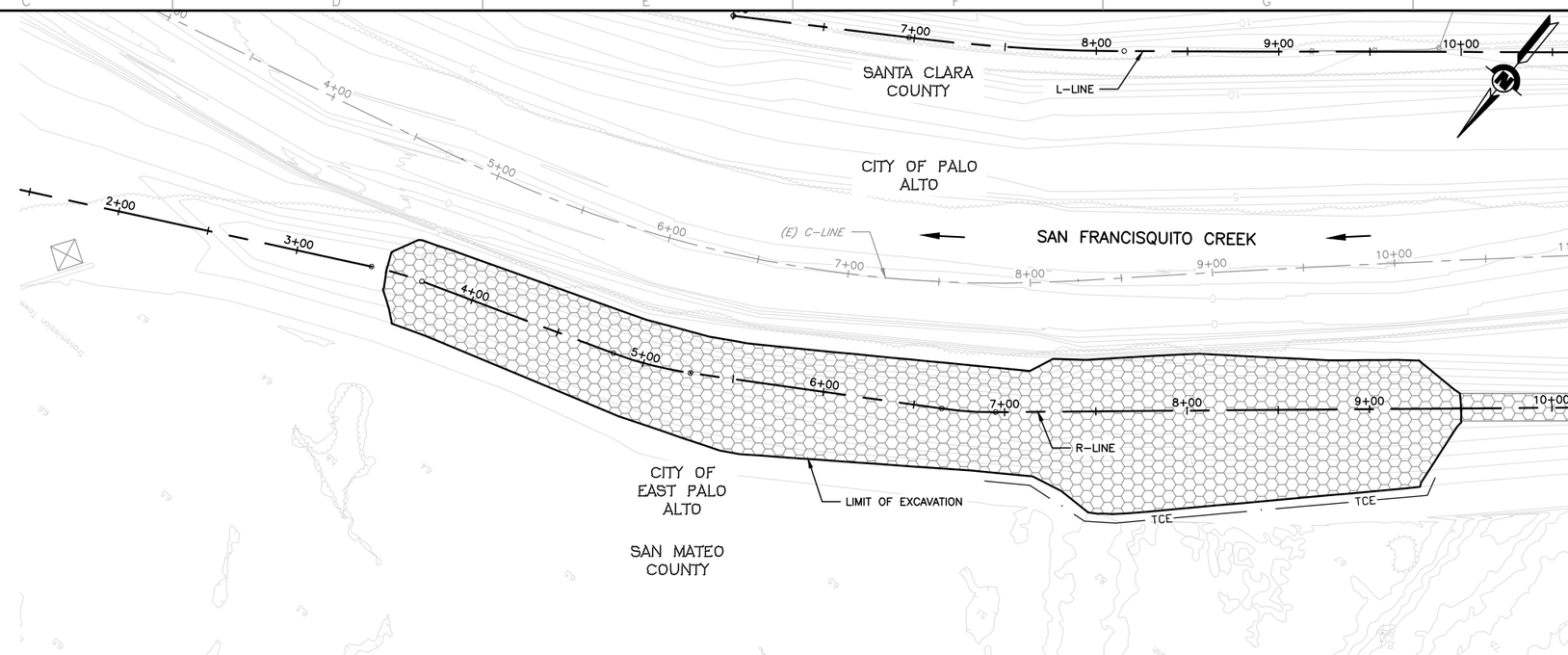

MATCHLINE 11+00
FOR CONTINUATION SEE BELOW

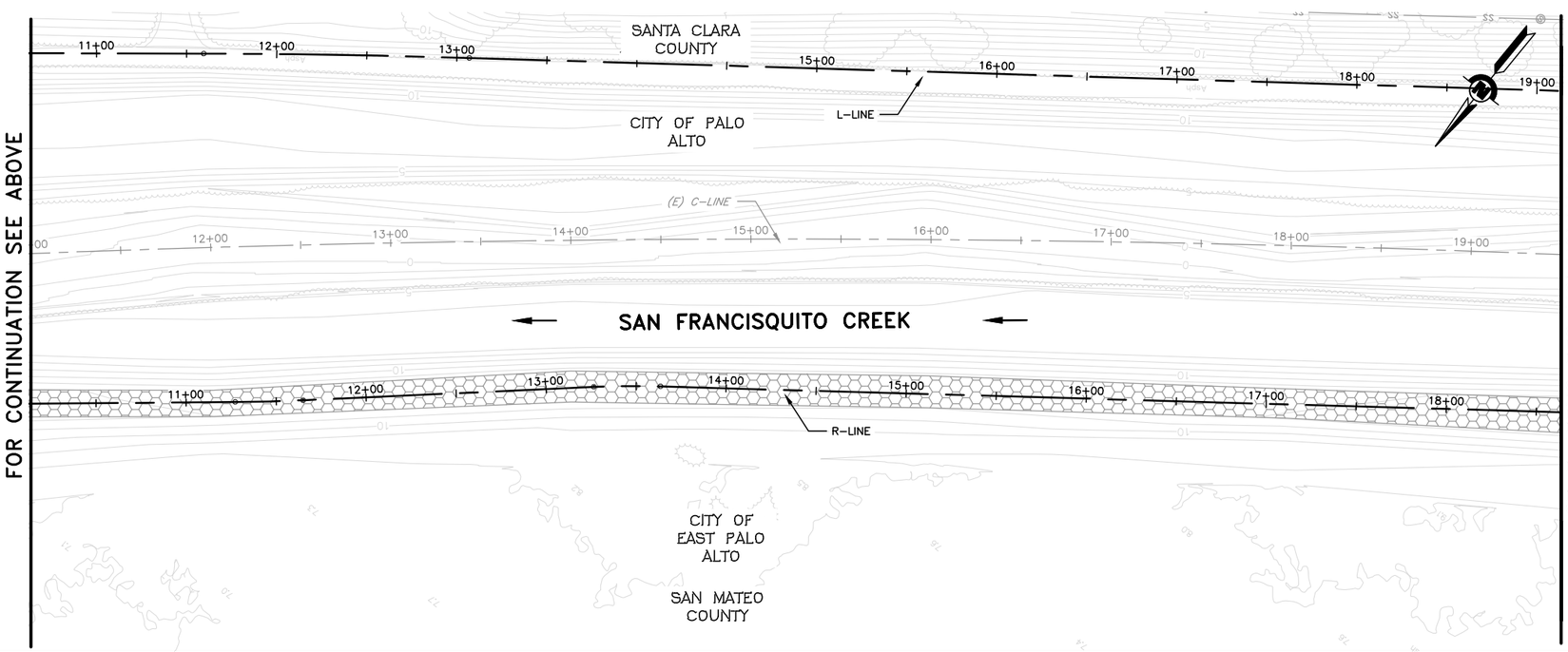

MATCHLINE 11+00
FOR CONTINUATION SEE ABOVE

MATCHLINE 19+50
FOR CONTINUATION SEE SHEET L-23

LEGEND:

- HIGH MARSH TRANSITION PLANTING ZONE
- HIGH MARSH PLANTING ZONE
- HIGH MARSH TRANSITION SEED MIX
- EROSION CONTROL SEED MIX
- ROCK SLOPE PROTECTION

SHEET NOTES:

1. NO IRRIGATION SHOWN ON THIS SHEET.

REV	DESCRIPTION	DATE	APPR.

HDR

DATE	JULY 2015
DESIGN	K. LANTZ
DRAWN	H. SUAREZ
CHECKED	K. MACKAY

ENGINEERING CERTIFICATION
LICENSED LANDSCAPE ARCHITECT — HEARD-MACK LAC 4508 — Signature — October 31, 2016 Renewal Date — Date — STATE OF CALIFORNIA
PROJECT ENGINEER DATE

SAN FRANCISQUITO CREEK
JOINT POWERS AUTHORITY
ACCEPTED BY DISTRICT
PROJECT ENGINEER DATE

PROJECT NAME AND SHEET DESCRIPTION:
SAN FRANCISQUITO CREEK FLOOD REDUCTION, ECOSYSTEM RESTORATION, & RECREATION PROJECT
IRRIGATION PLAN
C-LINE STATION 1+50 TO 19+50

SCALE: 1" = 40'
VERIFY SCALES: 0 — 1"
BAR IS ONE INCH ON ORIGINAL DRAWING IF NOT ONE INCH ON THIS SHEET, ADJUST SCALES ACCORDINGLY

PROJECT NUMBER: 26284002
SHEET CODE: L-23
SHEET NUMBER: 119 OF 126

DOCUMENT NUMBER: SFC_LP-C-1028-XXXXXXX

USERNAME: BillShad Tue 08 Jul 2008 09:32am
FILENAME: C:\pwworking\sac\d0171341\L20-L29(IGF)

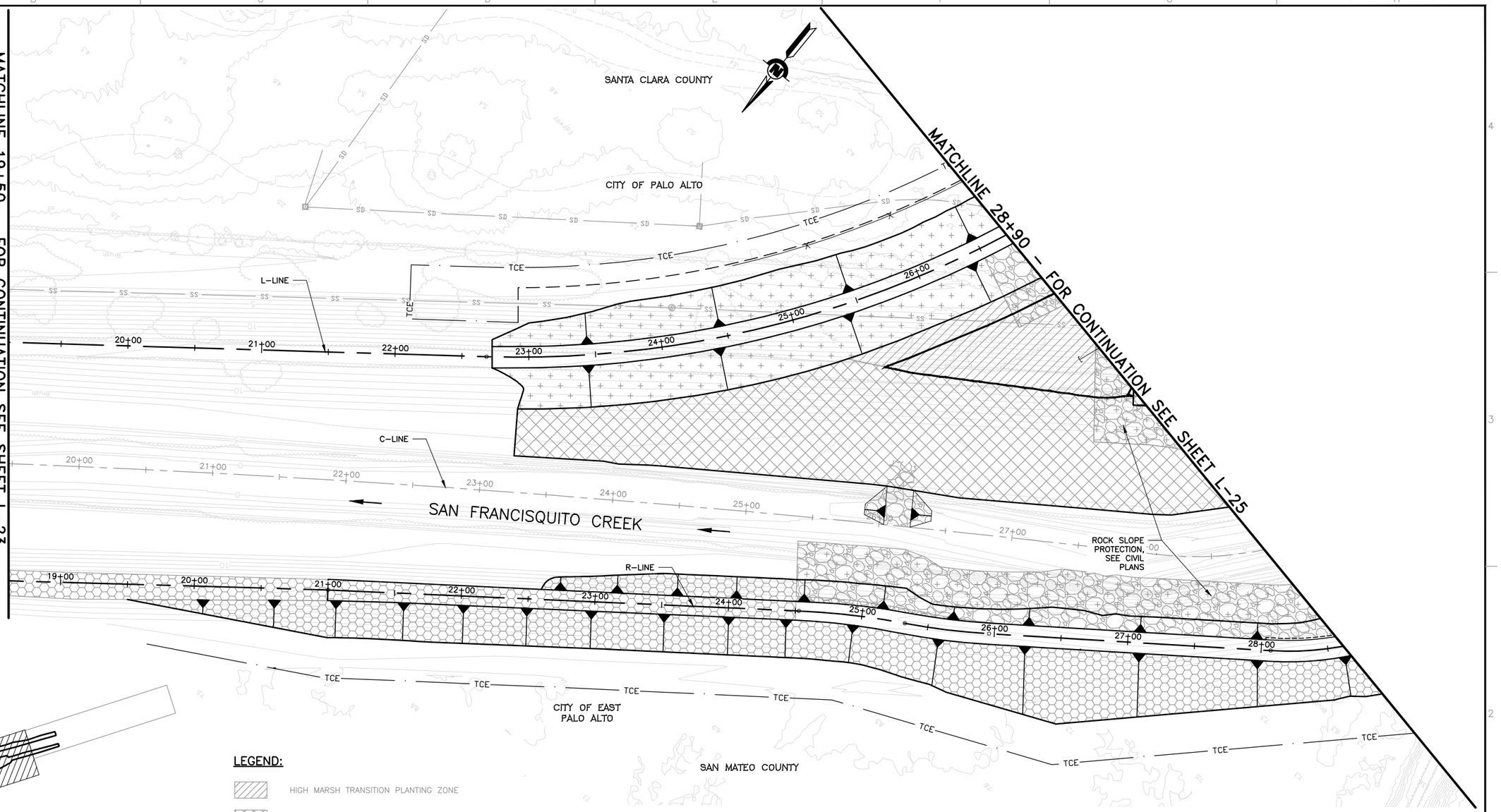

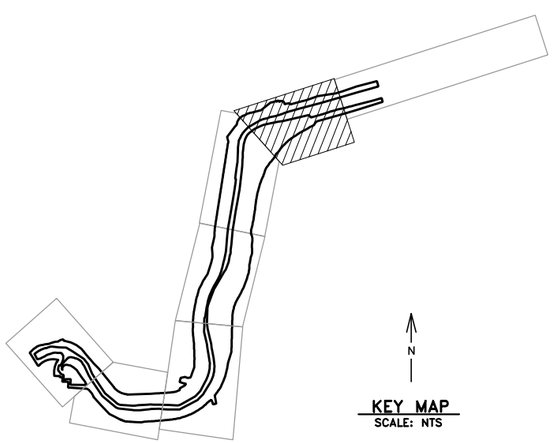

KEY MAP
SCALE: NTS

LEGEND:

- HIGH MARSH TRANSITION PLANTING ZONE
- HIGH MARSH PLANTING ZONE
- HIGH MARSH TRANSITION SEED MIX
- EROSION CONTROL SEED MIX
- ROCK SLOPE PROTECTION

SHEET NOTES:

1. NO IRRIGATION SHOWN ON THIS SHEET.

REV	DESCRIPTION	DATE	APPR.

HDR

DATE	JULY 2015
DESIGN	M. CLARKE
DRAWN	H. SUAREZ
CHECKED	H. HABIG

ENGINEERING CERTIFICATION

LICENSED LANDSCAPE ARCHITECT — HERALD HABIG LIC. #5028 — Date Signed October 31, 2014 — Renewal Date — Date — STATE OF CALIFORNIA

PROJECT ENGINEER DATE

SAN FRANCISQUITO CREEK JOINT POWERS AUTHORITY

ACCEPTED BY DISTRICT

PROJECT ENGINEER DATE

PROJECT NAME AND SHEET DESCRIPTION:

SAN FRANCISQUITO CREEK FLOOD REDUCTION, ECOSYSTEM RESTORATION, & RECREATION PROJECT

IRRIGATION PLAN
C-LINE STATION 19+50 TO 28+90

SCALE	PROJECT NUMBER
1" = 40'	26284002
VERIFY SCALES 0 — 1" BAR IS ONE INCH ON ORIGINAL DRAWING IF NOT ONE INCH ON THIS SHEET, ADJUST SCALES ACCORDINGLY	SHEET CODE: L-24
	SHEET NUMBER: 120 OF 126

DOCUMENT NUMBER: SFC_LP-C-1028-XXXXXXX

USERNAME: BillShad Tue 08 Jul 2008 09:32am
FILENAME: C:\pwworking\sec\d0171341\L20-L29(IGF)

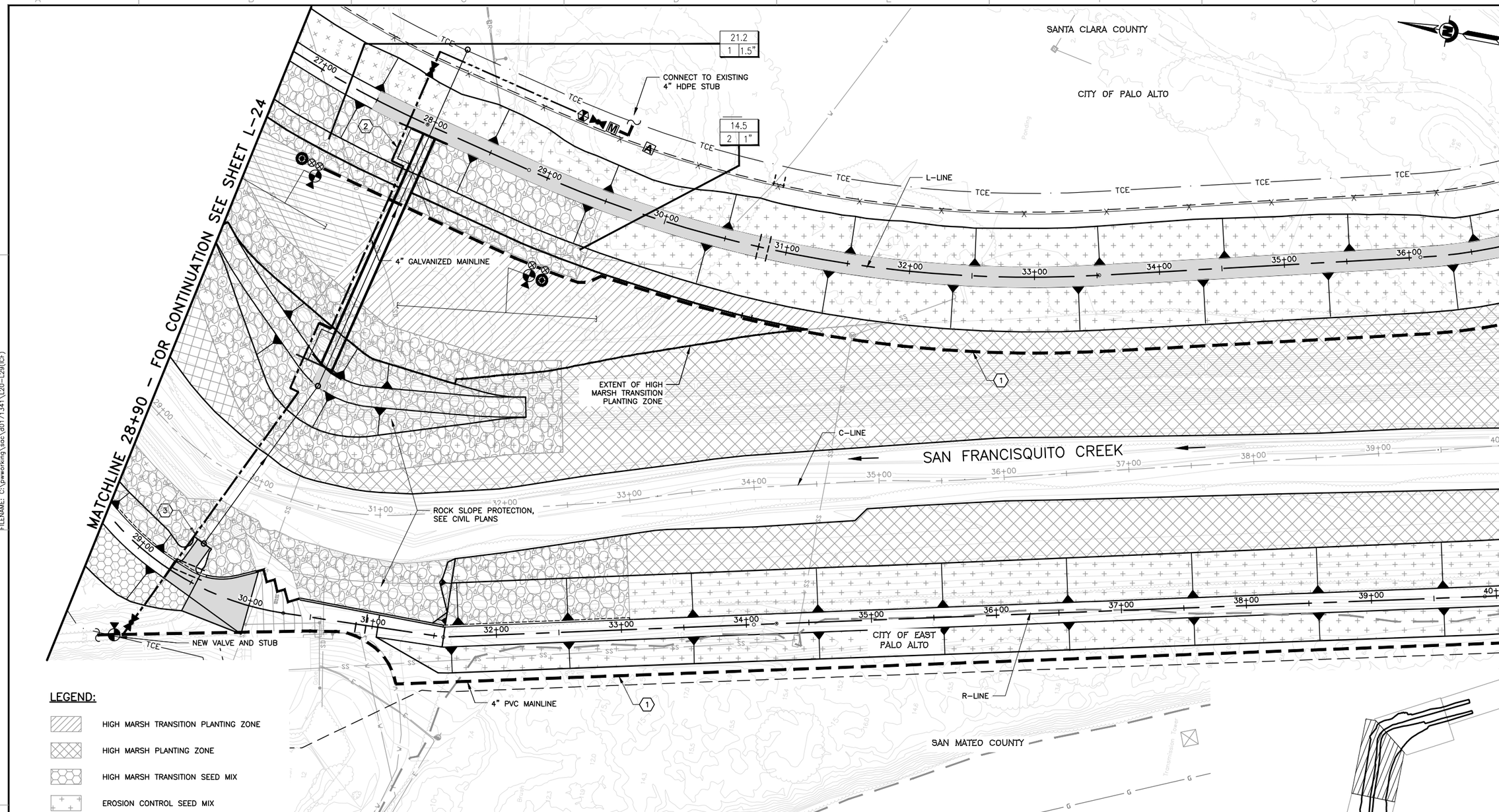

LEGEND:

- HIGH MARSH TRANSITION PLANTING ZONE
- HIGH MARSH PLANTING ZONE
- HIGH MARSH TRANSITION SEED MIX
- EROSION CONTROL SEED MIX
- ROCK SLOPE PROTECTION

KEY NOTES:

1. MAINLINE PARALLEL TO LEVEE SHALL BE INSTALLED A MINIMUM OF 10' FROM LEVEE TOE.
2. SEE SHEET L-21, DETAIL A FOR IRRIGATION LINE CROSSING THE LEVEE.
3. SEE SHEET L-21, DETAIL B FOR IRRIGATION LINE CROSSING THE LEVEE.

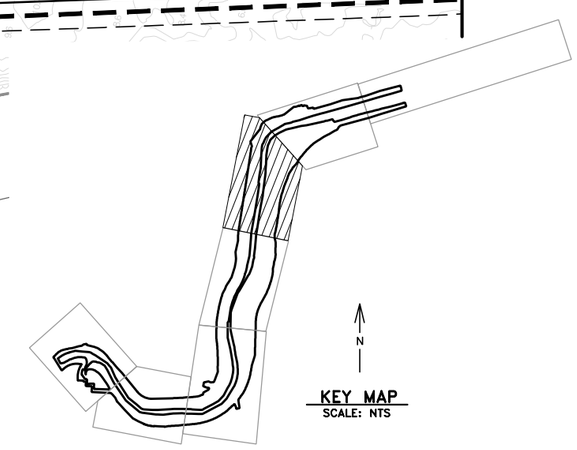

KEY MAP
SCALE: NTS

REV	DESCRIPTION	DATE	APPR.

HDR

DATE: JULY 2015
DESIGN: M. CLARKE
DRAWN: H. SUAREZ
CHECKED: H. HABIG

ENGINEERING CERTIFICATION
LICENSED LANDSCAPE ARCHITECT — HEARTH HABIG LIC. 4508 — Signature — October 31, 2015 Renewal Date — Date — STATE OF CALIFORNIA
PROJECT ENGINEER DATE

SAN FRANCISQUITO CREEK JOINT POWERS AUTHORITY
ACCEPTED BY DISTRICT
PROJECT ENGINEER DATE

PROJECT NAME AND SHEET DESCRIPTION:
SAN FRANCISQUITO CREEK FLOOD REDUCTION, ECOSYSTEM RESTORATION, & RECREATION PROJECT
IRRIGATION PLAN
C-LINE STATION 28+90 TO 40+00

SCALE: 1" = 40'
VERIFY SCALES: 0 — 1"
BAR IS ONE INCH ON ORIGINAL DRAWING IF NOT ONE INCH ON THIS SHEET, ADJUST SCALES ACCORDINGLY

PROJECT NUMBER: 26284002
SHEET CODE: L-25
SHEET NUMBER: 121 OF 126

DOCUMENT NUMBER: SFC_LP-C-1028-XXXXXXX

USERNAME: BillShad Tue 08 Jul 2008 09:32am
FILENAME: C:\pwworking\sac\d0171341\L20-L29(IGF)

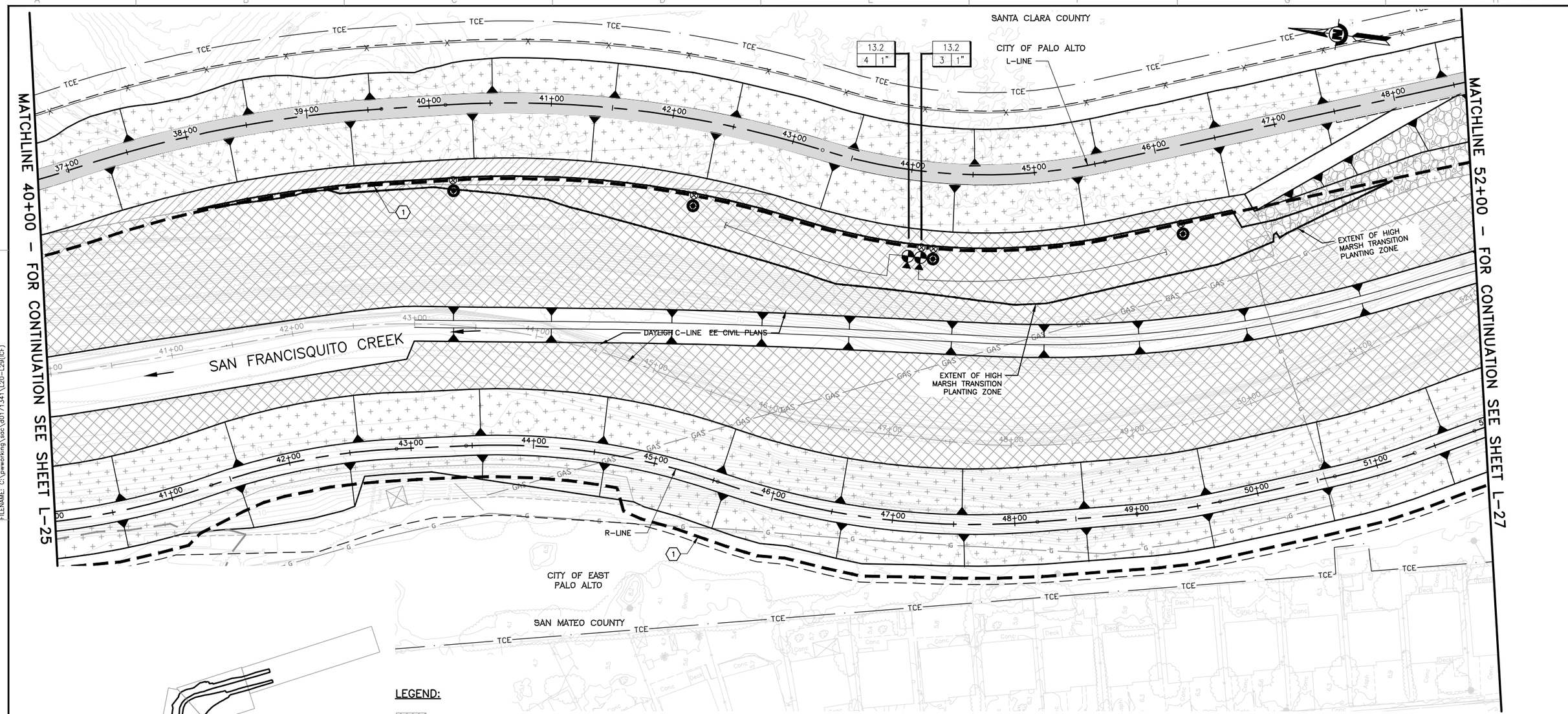

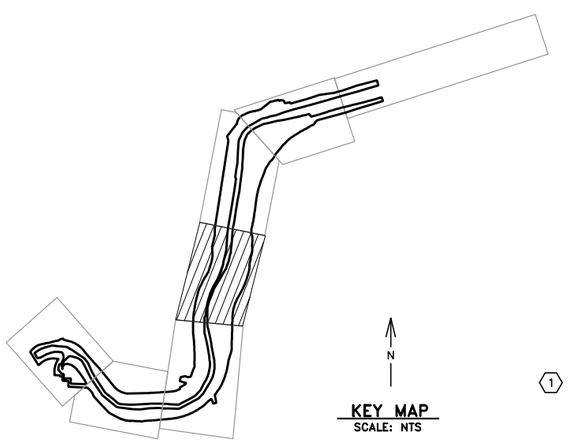

KEY MAP
SCALE: NTS

LEGEND:

- HIGH MARSH TRANSITION PLANTING ZONE
- HIGH MARSH PLANTING ZONE
- HIGH MARSH TRANSITION SEED MIX
- EROSION CONTROL SEED MIX
- ROCK SLOPE PROTECTION

KEY NOTES:

1. MAINLINE PARALLEL TO LEVEE SHALL BE INSTALLED A MINIMUM OF 10' FROM LEVEE TOE.

REV	DESCRIPTION	DATE	APPR.

HDR

DATE: JULY 2015
DESIGN: M. CLARKE
DRAWN: H. SUAREZ
CHECKED: H. HABIG

ENGINEERING CERTIFICATION
LICENSED LANDSCAPE ARCHITECT — HEATHER HABIG LIC. # 4508 — Signature — October 31, 2016 Renewal Date — Date — STATE OF CALIFORNIA
PROJECT ENGINEER DATE

SAN FRANCISQUITO CREEK
JOINT POWERS AUTHORITY
ACCEPTED BY DISTRICT
PROJECT ENGINEER DATE

PROJECT NAME AND SHEET DESCRIPTION:
SAN FRANCISQUITO CREEK FLOOD REDUCTION, ECOSYSTEM RESTORATION, & RECREATION PROJECT
IRRIGATION PLAN
C-LINE STATION 40+00 TO 52+00

SCALE: 1" = 40'
VERIFY SCALES: 0 — 1"
BAR IS ONE INCH ON ORIGINAL DRAWING IF NOT ONE INCH ON THIS SHEET, ADJUST SCALES ACCORDINGLY

PROJECT NUMBER: 26284002
SHEET CODE: L-26
SHEET NUMBER: 122 OF 126

DOCUMENT NUMBER: SFC_LP-C-1028-XXXXXXX

USERNAME: BillShad Tue 08 Jul 2008 09:32am
FILENAME: C:\pwworking\sac\d0171341\L20-L29(IGF)

MATCHLINE 52+00 – FOR CONTINUATION SEE SHEET L–26

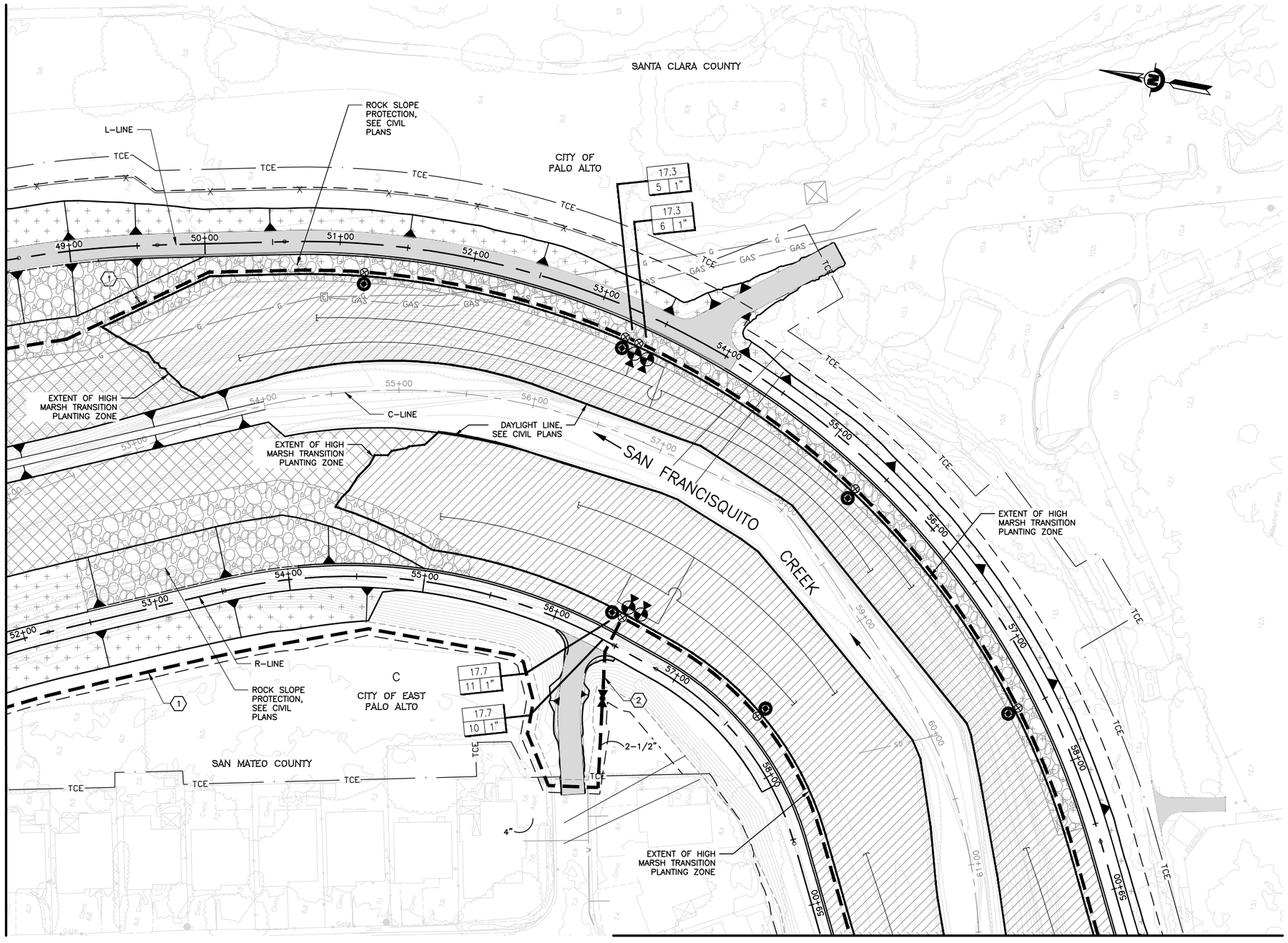

MATCHLINE 61+50 – FOR CONTINUATION SEE SHEET L–28

LEGEND:

- HIGH MARSH TRANSITION PLANTING ZONE
- HIGH MARSH PLANTING ZONE
- HIGH MARSH TRANSITION SEED MIX
- EROSION CONTROL SEED MIX
- ROCK SLOPE PROTECTION

KEY NOTES:

1. MAINLINE PARALLEL TO LEVEE SHALL BE INSTALLED A MINIMUM OF 10' FROM LEVEE TOE.
2. SEE SHEET L–21, DETAIL C FOR IRRIGATION LINE CROSSING THE LEVEE.

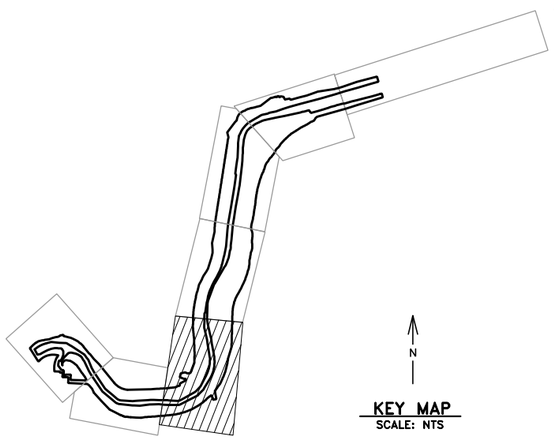

N

KEY MAP
SCALE: NTS

USERNAME: BillShad Tue 08 Jul 2008 09:32am
FILENAME: C:\pwworking\sac\d0171341\L20–L29(GF)

DOCUMENT NUMBER: SFC_LP–C–1028–XXXXXX

REV	DESCRIPTION	DATE	APPR.

HDR

DATE	ENGINEERING CERTIFICATION
JULY 2015	LICENSED LANDSCAPE ARCHITECT — HEARD HAGG LIC. #3208 — Signature — October 31, 2010 — Renewal Date — Date — STATE OF CALIFORNIA
DESIGN K. LANTZ	
DRAWN H. SUAREZ	
CHECKED K. MACKAY	PROJECT ENGINEER DATE

SAN FRANCISQUITO CREEK
JOINT POWERS AUTHORITY

ACCEPTED BY DISTRICT

PROJECT ENGINEER DATE

PROJECT NAME AND SHEET DESCRIPTION:

SAN FRANCISQUITO CREEK FLOOD REDUCTION, ECOSYSTEM RESTORATION, & RECREATION PROJECT

IRRIGATION PLAN
C–LINE STATION 52+00 TO 61+50

SCALE	PROJECT NUMBER
1" = 40'	26284002
VERIFY SCALES 0 1" BAR IS ONE INCH ON ORIGINAL DRAWING IF NOT ONE INCH ON THIS SHEET, ADJUST SCALES ACCORDINGLY	SHEET CODE: L–27
	SHEET NUMBER: 123 OF 126

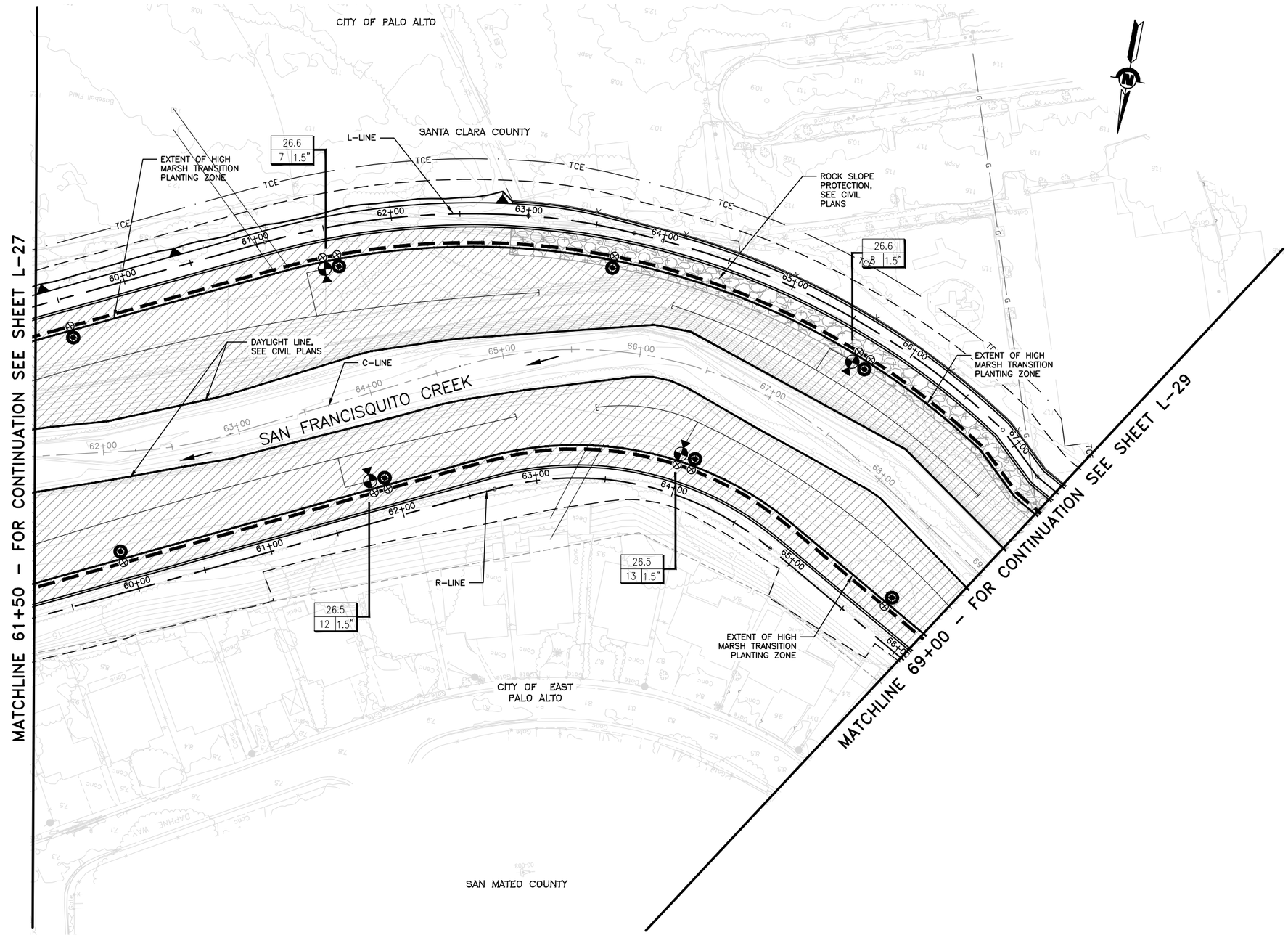

LEGEND:

- HIGH MARSH TRANSITION PLANTING ZONE
- HIGH MARSH PLANTING ZONE
- HIGH MARSH TRANSITION SEED MIX
- EROSION CONTROL SEED MIX
- ROCK SLOPE PROTECTION

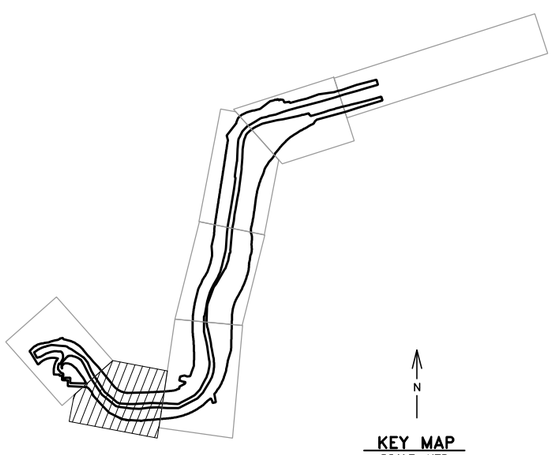

N

KEY MAP
SCALE: NTS

REV	DESCRIPTION	DATE	APPR.

HDR

DATE	JULY 2015
DESIGN	M. CLARKE
DRAWN	H. SUAREZ
CHECKED	H. HABIG

ENGINEERING CERTIFICATION

LICENSED LANDSCAPE ARCHITECT — HERALD HABIG LIC. NO. 2508 — STATE OF CALIFORNIA — Date Signed October 31, 2012 — Renewal Date — Date

PROJECT ENGINEER DATE

SAN FRANCISQUITO CREEK
JOINT POWERS AUTHORITY

ACCEPTED BY DISTRICT

PROJECT ENGINEER DATE

PROJECT NAME AND SHEET DESCRIPTION:

SAN FRANCISQUITO CREEK FLOOD REDUCTION, ECOSYSTEM RESTORATION, & RECREATION PROJECT

IRRIGATION PLAN
C-LINE STATION 61+50 TO 69+00

SCALE	PROJECT NUMBER
1" = 40'	26284002
VERIFY SCALES 0 1" BAR IS ONE INCH ON ORIGINAL DRAWING IF NOT ONE INCH ON THIS SHEET, ADJUST SCALES ACCORDINGLY	SHEET CODE: L-28
	SHEET NUMBER: 124 OF 126

DOCUMENT NUMBER: SFC_LP-C-1028-XXXXXXX

USERNAME: BillShad Tue 08 Jul 2008 09:32am
FILENAME: C:\pwworking\sac\d0171341\L20-L29(CF)

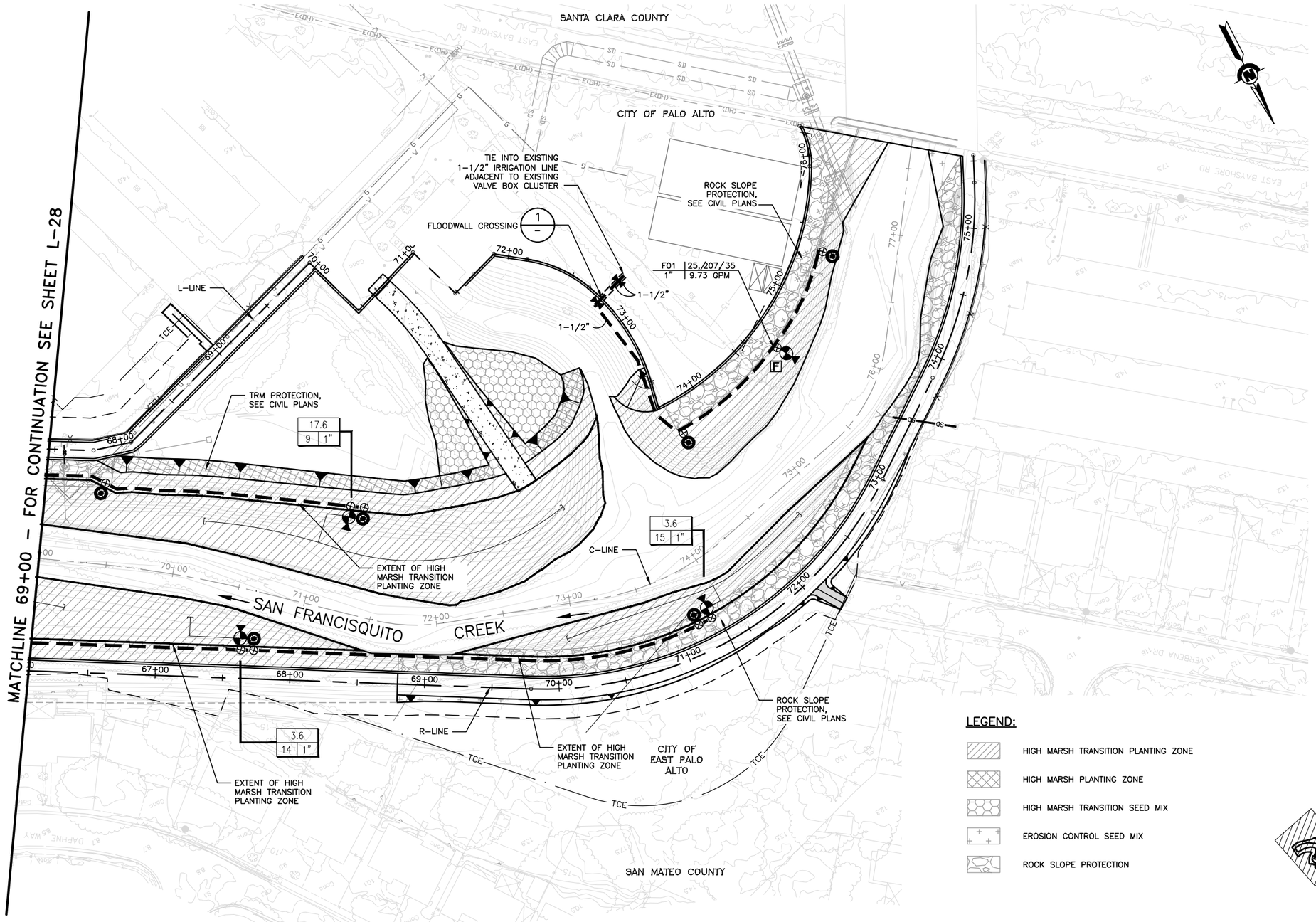

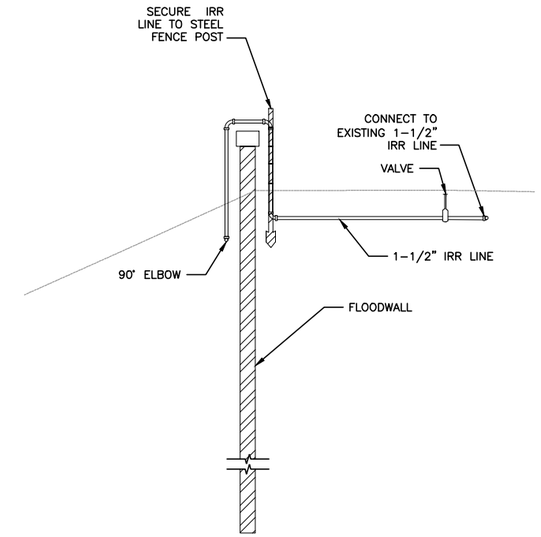

DETAIL 1 IRR CROSSING OVER FLOODWALL
NTS

LEGEND:

- HIGH MARSH TRANSITION PLANTING ZONE
- HIGH MARSH PLANTING ZONE
- HIGH MARSH TRANSITION SEED MIX
- EROSION CONTROL SEED MIX
- ROCK SLOPE PROTECTION

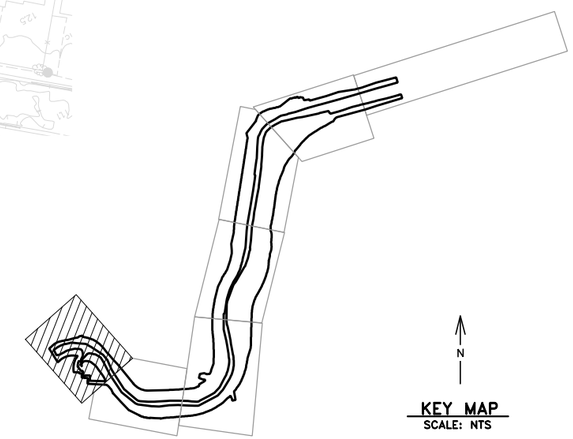

KEY MAP
SCALE: NTS

USERNAME: BillShad Tue 08 Jul 2008 09:32am
FILENAME: C:\pwworking\sec\d0171341\L20-L29(GF)

DOCUMENT NUMBER:SFC_LP-C-1028-XXXXXXX

REV	DESCRIPTION	DATE	APPR.

HDR

DATE	ENGINEERING CERTIFICATION
JULY 2015	
DESIGN M. CLARKE	
DRAWN H. SUAREZ	
CHECKED H. HABIG	
PROJECT ENGINEER DATE	

SAN FRANCISQUITO CREEK
JOINT POWERS AUTHORITY

ACCEPTED BY DISTRICT

PROJECT ENGINEER DATE

PROJECT NAME AND SHEET DESCRIPTION:

SAN FRANCISQUITO CREEK FLOOD REDUCTION, ECOSYSTEM RESTORATION, & RECREATION PROJECT

IRRIGATION PLAN
C-LINE STATION 69+00 TO 77+66

SCALE	PROJECT NUMBER
1" = 40'	26284002
VERIFY SCALES 0 1" BAR IS ONE INCH ON ORIGINAL DRAWING IF NOT ONE INCH ON THIS SHEET, ADJUST SCALES ACCORDINGLY	SHEET CODE: L-29
	SHEET NUMBER: 125 OF 126

USERNAME: BillShad Tue 08 Jul 2008 09:32am
FILENAME: C:\pwworking\sac\d0171341\D-01

ACTION NO. 2012-11
RECORD OF THE COUNCIL OF THE CITY OF PALO ALTO OF LAND USE ACTION FOR SAN FRANCISQUITO CREEK FLOOD CONTROL PROJECT: SITE AND DESIGN REVIEW 12PLN-00378 *(San Francisquito Creek Joint Powers Authority,* APPLICANT)

On November 13, 2012, the Council approved the Site and Design Review application for flood protection improvements in the PF(D) Public Facility with Site and Design Overlay Zone District, making the following findings, determination and declarations:

SECTION 1. Background. The *City Council of the City of Palo Alto ("City Council")* finds, determines, and declares as follows:

A. On September 19, 2012, the San Francisquito Creek Joint Powers Authority (JPA) applied for Site and Design Review for a project to provide 1% (100-year) flood protection improvements, riparian corridor enhancements, and recreational opportunities along San Francisquito Creek between Highway 101 and San Francisco Bay in the PF(D) Public Facility with Site and Design Overlay zone district ("the Project").

B. Following staff review, the Planning and Transportation Commission ("Commission") reviewed the Project on October 24, 2012 and voted 7-0 to recommend that Council approve the project. The Commission's actions are contained in the CMR: 3188.

C. Following Commission review, the Architectural Review Board (ARB) reviewed the Project on November 1, 2012 and voted (5-0) to recommend approval. The ARB's actions are contained in the CMR: 3188.

SECTION 2. Environmental Review. The JPA as the lead agency for the Project has determined that the project is subject to environmental review under provisions of the California Environmental Quality Act (CEQA). An Environmental Impact Report (EIR) was prepared to evaluate the potential project impacts and identify appropriate mitigation measures. The Draft EIR (DEIR) was available for public review July 30 through September 13, 2012. The JPA certified the Final EIR at their October 25th meeting. The City reviewed and considered the EIR prior to approving the Project.

SECTION 3. Site and Design Review Findings

1. *The use will be constructed and operated in a manner that will be orderly, harmonious, and compatible with existing or potential uses of adjoining or nearby sites.*

1

The proposed flood control project will be consistent with the existing functions of the park uses around the Baylands Athletic Center and Palo Alto Golf Course. The levee improvements and the associated wetlands restoration will enhance the Baylands environment while providing the necessary flood protections the community needs.

2. *The project is consistent with the goal of ensuring the desirability of investment, or the conduct of business, research, or educational activities, or other authorized occupations, in the same or adjacent areas.*

The Project will maintain desirability of investment in the same and adjacent areas in that the proposed goals and design are consistent with the existing Baylands environment, and the construction of all improvements will be governed by the regulations of the current Zoning Ordinance, the Uniform Building Code, and other applicable codes to assure safety and a high quality of development.

3. *Sound principles of environmental design and ecological balance are observed in the project.*

The Project will implement appropriate sustainable building practices as deemed feasible. The Project has been evaluated in the EIR for environmental impacts, and mitigations have been provided to reduce potential impacts. The project is required to comply with the City's Construction and Demolition requirements during construction activities.

4. *The use will be in accord with the Palo Alto Comprehensive Plan.*

The Project complies with the policies of the Land Use, Natural Environment, Transportation, and Community Services elements of the Comprehensive Plan as well as the Baylands Master Plan. The applicable goals and policies are list as an attachment to CMR 3188.

SECTION 4. Site and Design Approval Granted. Site and Design Approval is granted for the project by the City Council under Palo Alto Municipal Code Section 18.30(G), subject to the conditions of approval in Section 7 of this Record.

2

SECTION 5. Architectural Review Findings.

1. *The design is consistent and compatible with applicable elements of the city's Comprehensive Plan, in that:*

This finding can be made in the affirmative in that the project incorporates quality design that recognizes the sensitive nature of the Baylands area as described in the Comprehensive Plan.

2. *The design is compatible with the immediate environment of the site, in that:*

This finding can be made in the affirmative in that the design and layout of the project takes into consideration the existing conditions on site, including tree preservation and impact on public views.

3. *The design is appropriate to the function of the project, in that:*

This finding can be made in the affirmative in that the levee improvements serve a utilitarian purpose and the simple design of the levee walls and new bridge reflect this use.

4. *In areas considered by the board as having a unified design character or historical character, whether the design is compatible with such character, in that:*

This finding can be made on the affirmative in that the project components are consistent with Baylands Master Plan and enhance the natural environment with the improved wetlands restoration.

5. *The design promotes harmonious transitions in scale and character in areas between different designated land uses, in that:*

This finding is not applicable because the project is not situated in a transition area.

6. *The design is compatible with approved improvements both on and off the site, in that:*

This finding can be made in the affirmative in that the improvements are compatible with the existing park uses and are appropriately scaled based on the adjacent context.

7. *The planning and siting of the various functions and buildings on the site create an internal sense of order and provide*

3

a desirable environment for occupants, visitors and the general community, in that:

This finding can be made in the affirmative in that the levee project provides a lookout on the new bridge that would be valued amenity for users.

8. *The amount and arrangement of open space is appropriate to the design and the function of the structures, in that:*

This finding can be made in the affirmative in that the restored wetlands would provide better quality habitat than the existing conditions for the sensitive species of plants and animals that are found within the Baylands.

9. *Sufficient ancillary functions are provided to support the main functions of the project and whether the same are compatible with the project's design concept, in that:*

This finding is not applicable.

10. *Access to the property and circulation thereon are safe and convenient for pedestrians, cyclists and vehicles, in that:*

This finding can be made in the affirmative in that the project will provide a new levee path for pedestrian and bicyclist use and maintain the Bay Trail.

11. *Natural features are appropriately preserved and integrated with the project, in that:*

This finding can be made in the affirmative in that the Project incorporates a significant wetlands restoration that will enhance the natural features of the Baylands and create quality habitat for native species.

12. *The materials, textures, colors and details of construction and plant material are appropriate expression to the design and function and the same are compatible with the adjacent and neighboring structures, landscape elements and functions, in that:*

This finding can be made in the affirmative in that the selection of construction materials, finishes and plantings are appropriate for the Baylands; they are simple in form and use natural color tones and materials.

13. *The landscape design concept for the site, as shown by the relationship of plant masses, open space, scale, plant forms*

4

and foliage textures and colors create a desirable and functional environment and the landscape concept depicts an appropriate unity with the various buildings on the site, in that:

This finding can be made in the affirmative; see Findings 8 and 11 above.

14. *Plant material is suitable and adaptable to the site, capable of being properly maintained on the site, and is of a variety which would tend to be drought-resistant and to reduce consumption of water in its installation and maintenance, in that:*

This finding can be made in the affirmative in that the proposed project will use local Baylands native plantings that will be maintained until established.

15. *The project exhibits green building and sustainable design that is energy efficient, water conserving, durable and nontoxic, with high-quality spaces and high recycled content materials, in that:*

This finding can be made in the affirmative in that Project will implement appropriate sustainable building practices as deemed feasible. The project is required to comply with the City's Construction and Demolition requirements during construction activities.

16. *The design is consistent and compatible with the purpose of architectural review as set forth in subsection 18.76.020(a).*

This finding can be made in the affirmative in that the project design promotes visual environments that are of high aesthetic quality and variety.

SECTION 6. Plan Approval.

The plans submitted for Building Permit shall be in substantial conformance with those plans prepared by HDR Engineering Inc titled "Map and Construction Plan for San Francisquito Creek Early Implementation Project", consisting of 21 pages, dated July 13, 2012 and received September 19, 2012, except as modified to incorporate the conditions of approval in Section 7. A copy of these plans is on file in the Department of Planning and Community Development.

5

SECTION 7. Conditions of Approval.

Planning Division

1. The plans submitted for Building Permit shall be in substantial conformance with plans received on September 19, 2012, except as modified to incorporate the following conditions of approval. A complete copy of this Record of Land Use Action shall be printed on the plans submitted for City permits.
2. The project shall comply with all defined mitigation measures outlined in the project's EIR. A copy of the associated Mitigation Monitoring Reporting Plan shall be inserted into the project construction plans that will be used for permitting and on-site use.

The following details shall return to the ARB for review and approval prior to construction activities:

3. Provide a color sample for the flood wall;
4. Provide details on the flood wall and concrete cap (color, height, landscape treatments, etc.), or an alternative design for the cap and flood wall treatment;
5. Provide details on the proposed benches and permanent signage; and
6. Provide the feasibility of using pressure treated wood or the like containing less harmful chemicals (e.g. arsenic).

Transportation Division

7. Applicant shall submit for review and approval a detour plan and associated signage during construction closures.
8. Add City of Palo Alto standard bicycle wayfinding signage at each path junction.
9. Final pathways shall meet required widths and shoulders for widths and clearances, and be designed in accordance to adopted standards for mixed-use pathways.
10. Provide appropriate/and modified entrance to pathways at Geng Road access point.

Urban Forestry Division

11. Trees proposed for removal shall be specifically identified on a map and corresponding attribute table. Attributes will include at a minimum: a specific location and/or unique identifier, diameter, species, and condition. Information collected during the March 2012 inventory by Davey Resource Group should be included in total if utilized as the attribute table.

6

12. Ecosystem services of the trees proposed for removal shall be quantified using a recognized scientific estimation model such as the iTree software suite, or the National Tree Benefits Calculator found at, http://treebenefits.com/calculator/.
13. Landscape enhancements to the proposed designed ecosystem shall be described. Description will include, but not be limited to plant and tree characteristics for the replacements with example species, comparison of current to expected water use, soil condition, acres of turf, acres of naturescape where no turf is present, and wildlife habitat. References to pertinent sections of City of Palo Alto Plans including the Baylands Master Plan must be included.
14. Ecosystem services of the enhanced landscape proposed shall be quantified using a recognized scientific estimation model which is the same or similar to the estimation model used to quantify services of the trees proposed to be removed.
15. Mitigation for tree removals shall be calculated based on ecosystem services and then provided on site to the greatest extent possible.
16. Prior to any demolition and construction activities, the applicant shall submit a landscape plan, including tree protection measures, for the area impacted by the golf course stockpiling for staff review and approval.

Electrical Engineering

17. Projects that require the extension and/or relocation of high voltage primary distribution lines or reinforcement of offsite electric facilities will be at the customer's expense and must be coordinated with the Electric Utility. Note: Transmission facilities in the area of the project are owned by PG&E.

Public Works Engineering

PRIOR TO CONSTRUCTION

18. **Grading & excavation permit:** A *Grading and Excavation Permit* is required for the project if the total quantity of cut and/or fill outside of the building(s) footprint exceeds 100 cubic yards or if the disturbed area is 10,000 sq.ft. or greater. A grading permit only authorizes grading and storm drain improvements, therefore, the following note shall be included on each grading permit plan sheet: "This grading permit will only authorize general grading and installation of the storm drain system. Other building and utility improvements are shown for reference information only and are subject to separate building permit approval." No utility infrastructure should be shown inside the building footprints.

7

19. **Survey datum:** Plans shall be prepared using North American Datum 1983 State Plane Zone 3 for horizontal survey controls and NGVD 1929 for vertical survey controls throughout the design process.
20. **Final grading & drainage plan:** The plans shall include a final grading and drainage plan prepared by a licensed professional. This plan shall show existing and proposed spot elevations or contours of the site and demonstrate the proper conveyance of storm water to the nearest adequate municipal storm drainage system. Existing drainage patterns, including accommodation of runoff from adjacent properties, shall be maintained. Downspouts and splashblocks should be shown on this plan. Public Works encourages the developer to keep rainwater onsite as much as feasible by directing runoff to landscaped and other pervious areas of the site. See the *Grading & Drainage Plan Guidelines for New Single Family Residences* on our website: www.cityofpaloalto.org/public-works/eng-documents.html.
21. **SWPPP:** This proposed development will disturb more than one acre of land. Accordingly, the applicant must apply for coverage under the State Water Resources Control Board's (SWRCB) NPDES general permit for storm water discharge associated with construction activity. A Notice of Intent (NOI) must be filed for this project with the SWRCB in order to obtain coverage under the permit. The General Permit requires the applicant to prepare and implement a Storm Water Pollution Prevention Plan (SWPPP). The applicant is required to submit two copies of the NOI and the draft SWPPP to the Public Works Department for review and approval prior to issuance of the building permit. The SWPPP should include both permanent, post-development project design features and temporary measures employed during construction to control storm water pollution. The SWPPP shall be phased as appropriate for the specific stages of work through the timeline of the project.
22. **Stormwater sheet:** The City's full-sized "Pollution Prevention - It's Part of the Plan" sheet must be included in the plan set. Copies are available from Public Works at the Development Center or on our website: www.cityofpaloalto.org/public-works/eng-documents.html.
23. **Work in the right-of-way:** The plans must clearly indicate any work that is to be conducted in the public right-of-way, such

8

as sidewalk, driveway approach, curb, gutter or utility lateral work. The plans must include notes that the work must be done per Public Works' standards and that the contractor performing this work must first obtain a *Permit for Construction in the Public Street* from Public Works at the Development Center.

24. **Street trees:** Show all street trees in the public right-of-way or state that there are none. Include street tree protection details in the plans. Any removal, relocation or planting of street trees; or excavation, trenching or pavement installation within 10 feet of a street tree, must be approved by Public Works' arborist, Dave Dockter (phone: 650-329-3145). This approval shall appear on the plans.
25. **Logistics plan:** A construction logistics plan shall be provided addressing all impacts to the public and including, at a minimum: work hours, noticing of affected businesses, construction signage, dust control, noise control, storm water pollution prevention, job trailer, contractors' parking, truck routes, staging, concrete pours, crane lifts, scaffolding, materials storage, pedestrian safety, and traffic control. All truck routes shall conform to the City of Palo Alto's Trucks and Truck Route Ordinance, Chapter 10.48, and the route map, which outlines truck routes available throughout the City of Palo Alto. A handout describing these and other requirements for a construction logistics plan is available from Public Works Engineering at the Development Center or online at: http://www.cityofpaloalto.org/public-works/documents/eng-LogisticsPlanPreparationGuidelines.pdf. Typically, the construction logistics plan is attached to an encroachment permit or a *Permit for Construction in the Public Street*.
26. Applicant shall execute a mutually agreeable mitigation agreement with the City for construction impacts affecting the City's golf course and an easement or encroachment agreement with the City as deemed necessary by staff for any City land in the footprint of the Project.

DURING CONSTRUCTION

27. **Inspection:** The contractor must contact Public Works' Inspector at (650) 496-6929 prior to any work performed in the public right-of-way.

PRIOR TO FINALIZATION

28. **Record drawings:** At the conclusion of the project applicant shall provide digital as-built/record drawings of all improvements constructed in the public right-of-way or easements in which the City owns an interest. The digital files shall conform to North American Datum 1983 State Plane Zone 3 for horizontal survey controls and NGVD 1929 for vertical survey controls. In addition, a digital copy of any project parcel map, subdivision map, or certificate-of-compliance shall also be provided. All files should be delivered in AutoCad format.

9

SECTION 8. Term of Approval.

1. Site and Design Approval. In the event actual construction of the project is not commenced within two years of the date of council approval, the approval shall expire and be of no further force or effect, pursuant to Palo Alto Municipal Code Section 18.30(G).080.

PASSED: November 13, 2012

AYES: Burt, Espinosa, Klein, Price, Scharff, Schmid, Shepherd, Yeh

NOES: Holman

ABSTENTIONS:

ATTEST: City Clerk

APPROVED: 6/27/14 Director of Planning and Community Environment

APPROVED AS TO FORM: Senior Asst. City Attorney

PLANS AND DRAWINGS REFERENCED:

1. Those plans prepared plans by HDR Engineering Inc titled "Map and Construction Plan for San Francisquito Creek Early Implementation Project", consisting of 21 pages, dated July 13, 2012 and received September 19, 2012.

10

Mayor Yeh withdrew his second for the Motion.

MOTION FAILED DUE TO THE LACK OF SECOND

MOTION: Vice Mayor Scharff moved, seconded by Council Member Price to: 1) Approve a Record of Land Use Action approving the Site and Design application for the San Francisquito Creek Joint Powers Authority (JPA) initial flood protection project (Highway 101 to San Francisco Bay) based upon the findings and conditions in the Record of Land Use Action; 2)Adopt the attached Park Improvement Ordinance for modifications to the Palo Alto Municipal Golf Course and the John Fletcher Byxbee Recreation Area, and 3) altering language in the Record of Land Use, Section 7-Conditions of Approval, Item 8 to delete the word "consider" and change "adding" to "add". ok

MOTION PASSED: 8-1 Holman no

Mayor Yeh and Council Member Klein left the meeting at 8:40 P.M.

MOTION: Vice Mayor Scharff moved, seconded by Council Member Price to adopt the resolution authorizing an exception to Chapter 10.48 [Trucks and Truck Routes] of the Palo Alto Municipal Code for the limited purpose of allowing a transfer of soil from the Stanford University Medical Center construction project along Oregon Expressway to the Palo Alto Golf Course and adjacent areas.

AMENDMENT: Council Member Holman moved, seconded by Council Member Schmid that acceptance of fill prior to necessary need for construction project should not interfere with playability of the golf course

AMENDMENT WITHDRAWN BY THE MAKER

AMENDMENT: Council Member Burt moved, seconded by Council Member Holman that prior to accepting fill that would impact golf course play, Staff would bring a cost benefit analysis back to Council for approval prior to accepting a fill contract.

AMENDMENT PASSED: 5-2 Price, Shepherd no, Klein, Yeh not participating

MOTION AS AMENDED PASSED: 7-0 Klein, Yeh not participating

Mayor Yeh and Council Member Klein returned to the meeting at 9:06

November 13, 2012

GENERAL NOTE:

CONSTRUCTION FOR THIS PROJECT SHALL COMPLY WITH THE PROVISIONS ESTABLISHED IN THE CITY OF PALO ALTO LAND USE ACTION DOCUMENT SHOWN IN DETAIL ON THIS SHEET.

REV	DESCRIPTION	DATE	APPR.

HDR

DATE: JULY 2015
DESIGN: L. JONES
DRAWN: H. SUAREZ
CHECKED: P. HRADILEK

ENGINEERING CERTIFICATION
REGISTERED PROFESSIONAL ENGINEER — LANCE M. JONES — 68374 — Exp. 9/30/17 — CIVIL — STATE OF CALIFORNIA
PROJECT ENGINEER DATE

SAN FRANCISQUITO CREEK JOINT POWERS AUTHORITY
ACCEPTED BY DISTRICT
PROJECT ENGINEER DATE

PROJECT NAME AND SHEET DESCRIPTION:
SAN FRANCISQUITO CREEK FLOOD REDUCTION, ECOSYSTEM RESTORATION, & RECREATION PROJECT
CITY OF PALO ALTO LAND USE ACTION

SCALE: N/A
VERIFY SCALES: 0 1" — BAR IS ONE INCH ON ORIGINAL DRAWING IF NOT ONE INCH ON THIS SHEET, ADJUST SCALES ACCORDINGLY

PROJECT NUMBER: 26284002
SHEET CODE: D-1
SHEET NUMBER: 126 OF 126

DOCUMENT NUMBER: SFC_LP-G-1028-XXXXXXX