Linda S. Adams
Secretary for
Environmental Protection

# California Regional Water Quality Control Board

## San Francisco Bay Region

1515 Clay Street, Suite 1400
(510) 622-2300 • Fax (510) 622-2460
http://www.waterboards.ca.gov/sanfranciscobay

Arnold Schwarzenegger
*Governor*

## ORDER NO. R2-2007-0058
## NPDES NO. CA0038318

The following Discharger is subject to waste discharge requirements as set forth in this Order.

### Table 1. Discharger Information

| | |
|---|---|
| **Dischargers** | City & County of San Francisco and North Bayside System Unit (NBSU) |
| **Name of Facility** | San Francisco International Airport, Mel Leong Treatment Plant, Sanitary Plant |
| **Facility Address** | 676 McDonnell Road, San Francisco, San Mateo County, CA 94128 |

The discharge by the City and County of San Francisco, San Francisco International Airport (SFIA), Mel Leong Treatment Plant, Sanitary Plant, from the discharge point identified below is subject to waste discharge requirements as set forth in this Order.

### Table 2. Discharge Location

| Sampling Points | Effluent Description | Discharge Point Latitude | Discharge Point Longitude | Receiving Water |
|---|---|---|---|---|
| EFF-001-San, EFF-001A, EFF-002 | Treated Sanitary Wastewater | 37º, 39', 55" N | 122º, 21', 41" W | Lower San Francisco Bay |

### Table 3. Administrative Information

| | |
|---|---|
| This Order was adopted by the Regional Water Board on: | **August 8, 2007** |
| This Order shall become effective on: | **October 1, 2007** |
| This Order shall expire on: | **September 30, 2012** |
| The U.S. Environmental Protection Agency (USEPA) and the Regional Water Board have classified this discharge as a major discharge. | |
| The Discharger shall file a Report of Waste Discharge in accordance with Title 23, California Code of Regulations, not later than 180 days in advance of this Order expiration date as application for issuance of new waste discharge requirements. | |

IT IS HEREBY ORDERED, that this Order supersedes Order No. 01-145 except for enforcement purposes, and, in order to meet the provisions contained in Division 7 of the Water Code (commencing with section 13000) and regulations adopted thereunder, and the provisions of the federal Clean Water Act (CWA) and regulations and guidelines adopted thereunder, the Discharger shall comply with the requirements in this Order.

I, Bruce H. Wolfe, Executive Officer, do hereby certify that this Order with all attachments is a full, true, and correct copy of an Order adopted by the California Regional Water Quality Control Board, San Francisco Bay Region, on August 8, 2007.

Digitally signed by Bruce Wolfe
Date: 2007.09.07 15:09:02 -07'00'

Bruce H. Wolfe, Executive Officer

## Table of Contents

I. Facility Information ..... 4
II. Findings ..... 4
III. Discharge Prohibitions ..... 10
IV. Effluent Limitations and Discharge Specifications ..... 11
A. Effluent Limitations – Discharge Point 001 ..... 11
B. Effluent Limitations – Discharge Point 002 ..... 15
C. Mercury Mass Emission Limitation ..... 16
D. Reclamation Specifications ..... 16
V. Receiving Water Limitations ..... 16
A. Surface Water Limitations ..... 16
B. Groundwater Limitations ..... 17
VI. Provisions ..... 17
A. Standard Provisions ..... 17
B. Monitoring and Reporting Program (MRP) Requirements ..... 18
C. Special Provisions ..... 18
1. Re-opener Provisions ..... 18
2. Special Studies, Technical Reports and Additional Monitoring Requirements ..... 19
3. Best Management Practices and Pollution Minimization ..... 20
4. Requirement to Assure Compliance with Final Limits ..... 22
5. Construction, Operation and Maintenance Specifications ..... 24
6. Special Provisions for POTWs ..... 25
7. Other Special Provisions ..... 27
VII. Compliance Determination ..... 28
A. General ..... 28
B. Multiple Sample Data ..... 28

## List of Tables

Table 1. Discharger Information ..... 1
Table 2. Discharge Location ..... 1
Table 3. Administrative Information ..... 1
Table 4. Facility Information ..... 4
Table 5. Basin Plan Beneficial Uses of Lower San Francisco Bay ..... 7
Table 6. Effluent Limitations – Conventional Pollutants monitored at EFF-001-San ..... 11
Table 7. Effluent Limitations - Toxic Substances ..... 12
Table 8. Effluent Limitations – Discharge Point 002 ..... 15
Table 9. Requirements to Assure Compliance with Final Limitations ..... 23

## Attachments

Attachment A – Definitions ..... A-1
Attachment B – Topographic Map ..... B-1
Attachment C – Flow Schematic ..... C-1
Attachment D – Federal Standard Provisions ..... D-1
Attachment E – Monitoring and Reporting Program (MRP) ..... E-1
Attachment F – Fact Sheet ..... F-1
Attachment G – The following documents are part of this Permit, but are not physically attached due to volume. They are available on the internet at www.waterboards.ca.gov/sanfranciscobay/
- Self-Monitoring Program, Part A, adopted August 1993
- Standard Provisions and Reporting Requirements, August 1993
- August 6, 2001 Staff Letter: *Requirement for Priority Pollutant Monitoring in Receiving Water and Wastewater Discharges*

## I. FACILITY INFORMATION

The following Discharger is subject to the waste discharge requirements as set forth in this Order. Since the NBSU is responsible for chlorination and dechlorination of the effluent prior to discharge to Lower San Francisco Bay, the NBSU is also subject to these requirements:

**Table 4. Facility Information**

| | |
|---|---|
| **Dischargers** | City & County of San Francisco and North Bayside System Unit (NBSU) |
| **Name of Facility** | San Francisco International Airport, Mel Leong Treatment Plant, Sanitary Plant |
| **Facility Address** | 676 McDonnell Road, San Francisco, San Mateo County, CA 94128 |
| | |
| **Facility Contact, Title, and Phone** | SFIA: Mark Costanzo, Utility Manager, (650) 821-7809, Mark.costanzo@flysfo.com |
| **Mailing Address** | SFIA P.O. Box 8097, San Francisco, CA 94128 |
| **Type of Facility** | Publicly Owned Treatment Works |
| **Facility Design Flow** | 2.2 million gallons per day |

## II. FINDINGS

The California Regional Water Quality Control Board, San Francisco Bay Region (hereinafter the Regional Water Board), finds:

**A. Background.** The City and County of San Francisco, San Francisco International Airport (SFIA), Mel Leong Treatment Plant, Sanitary Plant is currently discharging under Order No. 01-145 and National Pollutant Discharge Elimination System (NPDES) Permit No. CA0038318. The Discharger submitted a Report of Waste Discharge, dated August 28, 2006 and applied for an NPDES permit renewal to discharge up to 2.2 million gallons per day (MGD) of treated wastewater from the Mel Leong Treatment Plant, Sanitary Plant. The application was deemed complete on November 29, 2006.

For the purposes of this Order, references to the “discharger” or “permittee” in applicable federal and state laws, regulations, plans, or policies are held to be equivalent to references to the Discharger herein.

**B. Facility Description**. The Discharger owns and operates the Mel Leong Treatment Plant. The Mel Leong Treatment Plant consists of a Sanitary Plant and an Industrial Plant. This Order pertains only to the Sanitary Plant. The Sanitary Plant includes a secondary wastewater treatment plant and its collection and conveyance system. The Sanitary Plant treats sanitary wastewater from airplanes and facilities such as terminal restrooms, hangars, restaurants, and shops located at the airport. The Industrial Plant treats first flush storm water collected from the SFIA as well as other wastewaters generated throughout the SFIA (e.g., maintenance shops, car washing). As necessary, either plant may occasionally be used to store or treat flows, spills or overflows from the other as necessary to assure that both treatment plants are operated efficiently and that such flows are captured and treated before they reach receiving waters.

Sanitary wastewaters from facilities throughout the SFIA are collected and conveyed to the Sanitary Plant though a system that consists of over 20 miles of sewer piping, eight lift stations, and 16 pump stations. Wastewater treatment processes at the Sanitary Plant consist of screening using punched plate bar screens, grit removal, flow equalization, biological treatment using sequential batch reactors (SBRs), and effluent flow equalization and chlorination. Sludge is treated by gravity belt thickening and anaerobic digestion then dewatered by belt filter presses or air dried using sludge drying beds. Final sludge cake and air-dried sludge are disposed at a landfill (currently Ox Mountain Sanitary Landfill).

After chlorination, treated wastewater is directed to a pumping station where it is combined with treated effluent from the Industrial Plant, and then discharged to the dechlorination facility owned and operated by the North Bayside System Unit (NBSU). The NBSU is operated by a joint powers authority of the same name and is responsible for operation of certain shared transport, treatment, and disposal facilities. NBSU member organizations include Millbrae, Burlingame, South San Francisco, San Bruno, and SFIA. The dechlorination facility is located at the South San Francisco/San Bruno Water Quality Control Plant, located at 195 Belle Air Road, South San Francisco, CA 94080. The plant manger is currently David Castagnola who may be contacted at 650 829 3844.

Dechlorination takes place in the NBSU outfall before the combined effluent is discharged. Effluent from the NBSU force main discharges into Lower San Francisco Bay, a water of the State and United States, northeast of Point San Bruno, through a submerged diffuser approximately 5,300 feet offshore at a depth of 20 feet below mean lower low water (latitude 37°, 39', 55" North and longitude 122°, 21', 41" West).

According to the permit application, in 2005 the Sanitary Plant discharged an average daily flow of 0.8 MGD; the highest recorded daily flow was 1.3 MGD. The dry weather design flow for the facility is 2.2 MGD.

In addition, approximately 100,000 gallons per day of treated wastewater is stored in pressurized tanks and used for in-plant purposes. The reclaimed water is used year-round on an as-needed basis.

For purposes of this Order, two Discharge Points are defined for effluent from the Sanitary Plant. Discharge Points 001 and 002. Discharge Point 001 represents treated effluent from the Mel Leong Sanitary Treatment Plant. As described further in the Monitoring and Reporting Program (Attachment E), two different monitoring locations have been established for Discharge Point 001. Monitoring Location EFF-001-San is used to collect samples from the Sanitary Plant. This treated waste water is then combined with the treated waste water from the Industrial Plant and samples of the combined flow collected at monitoring location EFF-001A. Samples from this location represent the total wastewater discharge from the Mel Leong Treatment Plant prior to discharge into the NBSU. Samples are also collected from Discharge Point 002 which is a point in the NBSU after dechlorination.

**Attachment B** provides a map of the area around the facility. **Attachment C** provides a flow schematic of the Facility.

C. **Legal Authorities.** This Order is issued pursuant to CWA section 402 and implementing regulations adopted by the USEPA and Chapters 5.5, Division 7 of the California Water Code (commencing with section 13370). It shall serve as an NPDES permit for point source discharges from this facility to surface waters. This Order also serves as Waste Discharge Requirements (WDRs) pursuant to Article 4, Chapter 4, Division 7 of the Water Code (commencing with section 13260).

D. **Background and Rationale for Requirements.** The Regional Water Board developed the requirements in this Order based on information submitted as part of the application, through monitoring and reporting programs, and other available information. The Fact Sheet (Attachment F), which contains background information and rationale for Order requirements, is hereby incorporated into this Order and constitutes part of the Findings for this Order. Attachments A through E and G are also incorporated into this Order.

E. **California Environmental Quality Act (CEQA).** Under Water Code section 13389, this action to adopt an NPDES permit is exempt from the provisions of CEQA.

F. **Technology-based Effluent Limitations.** NPDES regulations at 40 CFR 122.44 (a) require that permits include applicable technology-based limitations and standards. This Order includes technology-based effluent limitations based on Secondary Treatment Standards at 40 CFR Part 133 and Best Professional Judgment (BPJ) in accordance with 40 CFR 125.3. The Regional Water Board has considered the factors associated with these requirements when developing all effluent limitations. A detailed discussion of the technology-based effluent limitations development is included in the Fact Sheet.

G. **Water Quality-based Effluent Limitations.** 40 CFR 122.44 (d) requires that permits include effluent limitations for all pollutants that are or may be discharged at levels that have the reasonable potential to cause or contribute to an exceedance of a water quality standard, including numeric and narrative objectives within a standard. Where reasonable potential has been established for a pollutant, but there is no numeric criterion or objective for the pollutant, water quality-based effluent limitations (WQBELs) may be established: (1) using USEPA criteria guidance under CWA section 304(a), supplemented where necessary by other relevant information; (2) on an indicator parameter for the pollutant of concern; or (3) using a calculated numeric water quality criterion, such as a proposed state criterion or policy interpreting the state's narrative criterion, supplemented with other relevant information, as provided at 40 CFR 122.44(d)(1)(vi).

H. **Water Quality Control Plans.** The Regional Water Board adopted a *Water Quality Control Plan for the San Francisco Bay Basin* (revised in 2005*)* (hereinafter the Basin Plan) that designates beneficial uses, establishes water quality objectives, and contains implementation programs and policies to achieve those objectives for all waters addressed through the plan. In addition, the Basin Plan implements State Water Resources Control Board (State Water Board) Resolution No. 88-63, which establishes state policy that all waters, with certain exceptions, should be considered suitable or potentially suitable for municipal or domestic supply (MUN). Because of the marine influence on receiving waters of the San Francisco Bay, total dissolved solids levels in the Bay commonly (and often significantly) exceed 3,000 mg/l and thereby meet an exception to State Water Board

Resolution No. 88-63. Therefore, the designation MUN is not applicable to Lower San Francisco Bay. Beneficial uses applicable to Lower San Francisco Bay are as follows.

**Table 5. Basin Plan Beneficial Uses of Lower San Francisco Bay**

| Discharge Point | Receiving Water Name | Beneficial Uses |
|---|---|---|
| 002 | Lower San Francisco Bay | Industrial Service Supply (IND)<br>Navigation (NAV)<br>Water Contact Recreation (REC1)<br>Non-Contact Water Recreation (REC2)<br>Ocean Commercial and Sport Fishing (COMM)<br>Wildlife Habitat (WILD)<br>Preservation of Rare and Endangered Species (RARE)<br>Fish Migration (MIGR)<br>Shellfish Harvesting (SHELL)<br>Estuarine Habitat (EST) |

Requirements of this Order implement the Basin Plan.

I. **National Toxics Rule (NTR) and California Toxics Rule (CTR)**. USEPA adopted the NTR on December 22, 1992, and later amended it on May 4, 1995, and November 9, 1999. About forty criteria in the NTR applied in California. On May 18, 2000, USEPA adopted the CTR. The CTR promulgated new toxics criteria for California and, in addition, incorporated the previously adopted NTR criteria that were applicable in the State. The CTR was amended on February 13, 2001. These rules contain water quality criteria for priority pollutants.

J. **State Implementation Policy.** On March 2, 2000, the State Water Board adopted the *Policy for Implementation of Toxics Standards for Inland Surface Waters, Enclosed Bays, and Estuaries of California* (State Implementation Policy or SIP). The SIP became effective on April 28, 2000 with respect to the priority pollutant criteria promulgated for California by the USEPA through the NTR and to the priority pollutant objectives established by the Regional Water Board in the Basin Plan. The SIP became effective on May 18, 2000 with respect to the priority pollutant criteria promulgated by the USEPA through the CTR. The State Water Board adopted amendments to the SIP on February 24, 2005 that became effective on July 13, 2005. The SIP establishes implementation provisions for priority pollutant criteria and objectives and provisions for chronic toxicity control. Requirements of this Order implement the SIP.

K. **Compliance Schedules and Interim Requirements.** Section 2.1 of the SIP provides that, based on a Discharger's request and demonstration that it is infeasible for an existing Discharger to achieve immediate compliance with an effluent limitation derived from a CTR criterion, compliance schedules may be allowed in an NPDES permit. Unless an exception has been granted under section 5.3 of the SIP, a compliance schedule may not exceed 5 years from the date that the permit is issued or reissued, nor may it extend beyond 10 years from the effective date of the SIP (or May 18, 2010). Where a compliance schedule for a final effluent limitation exceeds one year, a permit must include interim numeric limitations for that constituent or parameter. Where allowed by the Basin

Plan, compliance schedules and interim effluent limitations or discharge specifications may also be granted to allow time to implement a new or revised water quality objective. This Order does include compliance schedules and interim effluent limitations. A detailed discussion of the basis for the compliance schedule(s) and interim effluent limitation(s) is included in the Fact Sheet.

L. **Alaska Rule.** On March 30, 2000, USEPA revised its regulation that specifies when new and revised state and tribal water quality standards become effective for CWA purposes. [40 CFR. §131.21; 65 Fed. Reg. 24641 (April 27, 2000)]. Under the revised regulation (also known as the Alaska rule), new and revised standards submitted to USEPA after May 30, 2000, must be approved by USEPA before being used for CWA purposes. The final rule also provides that standards already in effect and submitted to USEPA by May 30, 2000 may be used for CWA purposes, whether or not approved by USEPA.

M. **Stringency of Requirements for Individual Pollutants.** This Order contains restrictions on individual pollutants that are no more stringent than required by the federal CWA. Individual pollutant restrictions consist of technology-based restrictions and water quality-based effluent limitations. The technology-based effluent limitations consist of restrictions on 5-day carbonaceous biochemical oxygen demand ($CBOD_5$), total suspended solids (TSS), pH, turbidity, oil and grease, and chlorine residual. Restrictions on these pollutants are specified in federal regulations as discussed in Section III.C.6 of the Fact Sheet. Water quality-based effluent limitations have been scientifically derived to implement water quality objectives that protect beneficial uses. Both the beneficial uses and the water quality objectives have been approved pursuant to federal law and are the applicable federal water quality standards. To the extent that toxic pollutant water quality-based effluent limitations were derived from the CTR, the CTR is the applicable standard pursuant to 40 CFR 131.38. The scientific procedures for calculating the individual water quality-based effluent limitations are based on the CTR-SIP, which was approved by USEPA on May 18, 2000. All beneficial uses and water quality objectives contained in the Basin Plan were approved under state law and submitted to and approved by USEPA prior to May 30, 2000. Any water quality objectives and beneficial uses submitted to USEPA prior to May 30, 2000, but not approved by USEPA before that date, are nonetheless "applicable water quality standards for purposes of the CWA" pursuant to 40 CFR 131.21 (c)(1). Collectively, this Order's restrictions on individual pollutants are no more stringent than required to implement the technology-based requirements of the CWA and the applicable water quality standards for purposes of the CWA.

N. **Antidegradation Policy.** 40 CFR 131.12 requires that the state water quality standards include an antidegradation policy consistent with the federal policy. The State Water Board established California's antidegradation policy in State Water Board Resolution No. 68-16. Resolution No. 68-16 incorporates the federal antidegradation policy where the federal policy applies under federal law. Resolution No. 68-16 requires that existing quality of waters be maintained unless degradation is justified based on specific findings. The Regional Water Board's Basin Plan implements, and incorporates by reference, both the state and federal antidegradation policies. As discussed in detail in the Fact Sheet, the permitted discharge is consistent with the antidegradation provision of 40 CFR 131.12 and State Water Board Resolution No. 68-16.

**O. Anti-Backsliding Requirements.** CWA Sections 402(o)(2) and 303(d)(4) of and NPDES regulations at 40 CFR 122.44(l) prohibit backsliding in NPDES permits. These anti-backsliding provisions require effluent limitations in a reissued permit to be as stringent as those in the previous Order, with some exceptions where limitations may be relaxed. All effluent limitations in this Order are at least as stringent as the effluent limitations in the previous Order.

**P. Monitoring and Reporting.** 40 CFR 122.48 requires that all NPDES permits specify requirements for recording and reporting monitoring results. Water Code sections 13267 and 13383 authorizes the Regional Water Board to require technical and monitoring reports. The Monitoring and Reporting Program establishes monitoring and reporting requirements to implement federal and State requirements. This Monitoring and Reporting Program is provided in Attachment E.

**Q. Standard and Special Provisions.** Standard Provisions, which apply to all NPDES permits in accordance with 40 CFR 122.41, and additional conditions applicable to specified categories of permits in accordance with 40 CFR 122.42, are provided in Attachment D. The Discharger must comply with all standard provisions and with those additional conditions that are applicable under 40 CFR 122.42. The Regional Water Board has also included in this Order special provisions applicable to the Discharger. A rationale for the special provisions contained in this Order is provided in the attached Fact Sheet.

**R. Provisions and Requirements Implementing State Law.** The provisions/requirements in subsections IV.E and V.B of this Order are included to implement state law only. These provisions/requirements are not required or authorized under the federal CWA; consequently, violations of these provisions/requirements are not subject to the enforcement remedies that are available for NPDES violations.

**S. Notification of Interested Parties.** The Regional Water Board has notified the Discharger and interested agencies and persons of its intent to prescribe Waste Discharge Requirements for the discharge and has provided them with an opportunity to submit their written comments and recommendations. Details of notification are provided in the Fact Sheet of this Order.

**T. Consideration of Public Comment.** The Regional Water Board, in a public meeting, heard and considered all comments pertaining to the discharge. Details of the Public Hearing are provided in the Fact Sheet of this Order.

## III. DISCHARGE PROHIBITIONS

**A**. Discharge of treated wastewater at a location or in a manner different from that described in this Order is prohibited.

**B.** Discharge at any point at which the treated wastewater does not receive an initial dilution of at least 10:1 is prohibited.

**C.** The bypass of untreated or partially treated wastewater to waters of the United States is prohibited, except as provided for in the conditions stated in 40 CFR 122.41(m)(4) and in A.12 of the *Standard Provisions and Reporting Requirements for NPDES Surface Water Discharge Permits*, August 1993 (**Attachment G**).

**D.** The average dry weather flow, as measured at Monitoring Location EFF-001 described in the attached MRP (Attachment E), shall not exceed 2.2 million gallons per day. Actual average dry weather flow shall be determined for compliance with this prohibition over three consecutive dry weather months each year.

**E**. Any sanitary sewer overflow that results in a discharge of untreated or partially treated wastewater to waters of the United States is prohibited.

# IV. EFFLUENT LIMITATIONS AND DISCHARGE SPECIFICATIONS

## A. Effluent Limitations – Discharge Point 001

### 1. Effluent Limitations for Conventional Pollutants

a. The Discharger shall maintain compliance with the following effluent limitations at Monitoring Location EFF-001-San as described in the attached MRP (Attachment E). Conventional pollutants in the waste water from the Sanitary Plant are monitored before the waste water is combined with the waste water from the Industrial Plant. There is a separate monitoring location, EFF-001A for the combined flow.

**Table 6. Effluent Limitations – Conventional Pollutants monitored at EFF-001-San**

| Parameter | Units | Effluent Limitations | | | | |
|---|---|---|---|---|---|---|
| | | Average Monthly | Average Weekly | Maximum Daily | Instantaneous Minimum | Instantaneous Maximum |
| Carbonaceous Biochemical Oxygen Demand (5-day @ 20 Deg. C) ($CBOD_5$) | mg/l | 25 | 40 | -- | -- | -- |
| Total Suspended Solids (TSS) | mg/l | 30 | 45 | -- | -- | -- |
| Oil and Grease | mg/l | 10 | -- | 20 | -- | -- |
| pH[(1)] | standard units | -- | -- | -- | 6.0 | 9.0 |

(1) If the Discharger monitors pH continuously, pursuant to 40 CFR 401.17, the Discharger shall be in compliance with the pH limitation specified herein, provided that both of the following conditions are satisfied: (i) the total time during which the pH values are outside the required range of pH values shall not exceed 7 hours and 26 minutes in any calendar month; and (ii) no individual excursion from the range of pH values shall exceed 60 minutes.

b. **$CBOD_5$ and TSS 85 Percent Removal:** The average monthly percent removal of $CBOD_5$ and TSS, by concentration, based on samples from the inflow (INF-001-San) and outflow (EFF-001-San) shall not be less than 85 percent.

c. **Fecal Coliform Bacteria:** The treated wastewater, from samples collected from sampling point EFF-001A, shall meet the following limitations of bacteriological quality:

(1) The 5-day geometric mean fecal coliform density shall not exceed a Most Probable Number (MPN) of fecal coliform bacteria of 200 MPN/100 ml.

(2) The 90$^{th}$ percentile value of the last ten fecal coliform density values shall not exceed 400 MPN/100 ml.

d. **Enterococci Bacteria:** The monthly geometric mean enterococci bacteria density in samples of treated wastewater collected at EFF-001A shall not exceed 35 colonies/100 ml.

## 2. Effluent Limitations for Toxics Substances

a. The Discharger shall maintain compliance with the following effluent limitations at at Monitoring Location EFF-001A (except for cyanide, measured at Location EFF-002), as described in the attached MRP (Attachment E):

**Table 7. Effluent Limitations - Toxic Substances**

| Parameter | Units | Effluent Limitations (1)(2) | | | | |
|---|---|---|---|---|---|---|
| | | Average Monthly | Average Weekly | Maximum Daily | | |
| Copper (3) | µg/l | 54 | -- | 110 | | -- |
| Lead | µg/l | 64 | -- | 130 | | -- |
| Mercury (4) | µg/l | 0.020 | -- | 0.041 | | -- |
| Nickel | µg/l | 76 | -- | 150 | | -- |
| Dioxin-TEQ(4) | µg/l | $1.4 \times 10^{-8}$ | -- | $2.8 \times 10^{-8}$ | | -- |
| Aldrin(4) | µg/l | 0.00014 | -- | 0.00028 | | -- |
| Alpha-BHC | µg/l | 0.13 | -- | 0.26 | | -- |
| Beta-BHC | µg/l | 0.46 | -- | 0.92 | | -- |
| 4,4-DDT(4) | µg/l | 0.00059 | -- | 0.0012 | | -- |
| 4,4-DDE | µg/l | 0.00059 | -- | 0.0012 | | -- |
| Dieldrin | µg/l | 0.00014 | -- | 0.00028 | | -- |
| Endrin | µg/l | 0.019 | -- | 0.037 | | -- |
| Heptachlor(4) | µg/l | 0.0020 | -- | 0.0041 | | -- |
| Heptachlor Epoxide(4) | µg/l | 0.00089 | -- | 0.0018 | | -- |
| Ammonia(5) | mg/l | 120 | | 310 | | |
| Tributyltin | µg/l | 0.061 | -- | 0.12 | -- | -- |

(1) (a) Limitations apply to the average concentration of all samples collected during the averaging period (daily = 24-hour period; monthly = calendar month).

(b) All metals limitations are expressed as total recoverable metal.

(2) A daily maximum or average monthly value for a given constituent shall be considered noncompliant with the effluent limitations only if it exceeds the effluent limitation and the Reporting Level for that constituent. As outlined in Section 2.4.5 of the SIP, the table below indicates the Minimum Level (ML) upon which the Reporting Level is based for compliance determination purposes. In addition, in order to perform reasonable potential analysis for future permit reissuance, the Discharger shall use methods with MLs lower than the applicable water quality objectives or water quality criteria (e.g., copper). A ML is the concentration at which the entire analytical system must give a recognizable signal and the acceptable calibration point. The ML is the concentration in a sample that is equivalent to the concentration of the lowest calibration standard analyzed by a specific analytical procedure, assuming that all the method specified sample weights, volumes, and processing steps have been followed.

**Minimum Levels for Pollutants with Effluent Limitations**

| Parameter | Minimum Level | Units |
|---|---|---|
| Copper | 2 | µg/l |
| Lead | 2 | µg/l |
| Mercury | 0.0005 | µg/l |
| Nickel | 5 | µg/l |
| Cyanide | 5 | µg/l |
| Dioxin-TEQ | ½ the USEPA specified MLs for Method 1613 | µg/l |

| Parameter | Minimum Level | Units |
|---|---|---|
| Aldrin | 0.005 | µg/l |
| alpha-BHC | 0.01 | µg/l |
| beta-BHC | 0.005 | µg/l |
| 4,4-DDT | 0.01 | µg/l |
| 4,4-DDE | 0.05 | µg/l |
| Dieldrin | 0.01 | µg/l |
| Endrin | 0.01 | µg/l |
| Heptachlor | 0.01 | µg/l |
| Heptachlor Epoxide | 0.01 | µg/l |
| Ammonia(5) | 0.1 | mg/l |
| Tributyltin | 0.001 | µg/l |

| Isomer Group | Minimum Level, pg/l |
|---|---|
| 2,3,7,8-TetraCDD | 5 |
| 1,2,3,7,8-PentaCDD | 25 |
| 1,2,3,4,7,8-HexaCDD | 25 |
| 1,2,3,6,7,8-HexaCDD | 25 |
| 1,2,3,7,8,9-HexaCDD | 25 |
| 1,2,3,4,6,7,8-HeptaCDD | 25 |
| OctaCDD | 50 |
| 2,3,7,8-TetraCDF | 5 |
| 1,2,3,7,8-PentaCDF | 25 |
| 2,3,4,7,8-PentaCDF | 25 |
| 1,2,3,4,7,8-HexaCDF | 25 |
| 1,2,3,6,7,8-HexaCDF | 25 |
| 1,2,3,7,8,9-HexaCDF | 25 |
| 2,3,4,6,7,8-HexaCDF | 25 |
| 1,2,3,4,6,7,8-HeptaCDF | 25 |
| 1,2,3,4,7,8,9-HeptaCDF | 25 |

(3) Alternate Effluent Limitations for Copper:

a. If a copper SSO for the receiving water becomes legally effective, resulting in adjusted saltwater Criterion Continuous Concentration (CCC) of 2.5 µg/l and Criterion Maximum Concentration (CMC) of 3.9 µg/l as documented in the *North of Dumbarton Bridge Copper and Nickel Site-Specific Objective (SSO) Derivation (Clean Estuary Partnership December 2004)*, upon its effective date, the following limitations shall supersede those copper limitations listed in Table 7.

AMEL of 42 µg/l, and MDEL of 84 µg/l.

b. If a different copper SSO for the receiving water is adopted, the alternate WQBELs based on the SSO will be determined after the SSO effective date.

(4) Limits for these pollutants become effective according to the compliance schedules described in VI.C.4.

(5) Measured as N in total ammonia

**3. Acute Toxicity:**

a. Representative samples of the effluent at Discharge Point 001, collected before chlorination, shall meet the following limitations for acute toxicity: Bioassays shall be conducted in compliance with Section V.A of the Monitoring and Reporting Program (MRP, **Attachment E**).

The survival of organisms in undiluted combined effluent shall be an eleven (11) sample median value of not less than 90 percent survival, and an eleven (11) sample 90 percentile value of not less than 70 percent survival.

b. These acute toxicity limitations are further defined as follows:

**11 sample median:** A bioassay test showing survival of less than 90 percent represents a violation of this effluent limit, if five or more of the past ten or fewer bioassay tests show less than 90 percent survival.

**90th percentile**: A bioassay test showing survival of less than 70 percent represents a violation of this effluent limit, if one or more of the past ten or fewer bioassay tests show less than 70 percent survival.

c. Bioassays shall be performed using the most up-to-date USEPA protocol and the most sensitive species as specified in writing by the Executive Officer based on the most recent screening test results. Bioassays shall be conducted in compliance with "Methods for Measuring the Acute Toxicity of Effluents and Receiving Water to Freshwater and Marine Organisms," currently 5th Edition (EPA-821-R-02-012), with exceptions granted to the Discharger by the Executive Officer and the Environmental Laboratory Accreditation Program (ELAP) upon the Discharger's request with justification.

d. If the Discharger can demonstrate to the satisfaction of the Executive Officer that toxicity exceeding the levels cited above is caused by ammonia and that the discharge is in compliance with the effluent limits, then such toxicity does not constitute a violation of this effluent limitation.

**4. Chronic Toxicity**

a. Compliance with the Basin Plan narrative chronic toxicity objective shall be demonstrated according to the following tiered requirements based on results from representative samples of the treated final effluent at Discharge Point 001 (Monitoring Location EFF-001A) meeting test acceptability criteria and Section V.B of the MRP (**Attachment E**). Failure to conduct the required toxicity tests or a TRE within a designated period shall result in the establishment of effluent limitations for chronic toxicity.

(1) Conduct routine monitoring.

(2) Accelerate monitoring after exceeding a three sample median value of 10 chronic toxicity units (TUc) or a single sample maximum of 20 TUc or greater. Accelerated monitoring shall consist of monthly monitoring.

(3) Return to routine monitoring if accelerated monitoring does not exceed the "trigger" in (2), above.

(4) If accelerated monitoring confirms consistent toxicity above either "trigger" in (2), above, initiate toxicity identification evaluation/toxicity reduction evaluation (TIE/TRE) in accordance with a workplan submitted in accordance with Section V.B.3 of the MRP (Attachment E), and that incorporates any and all comments from the Executive Officer.

(5) Return to routine monitoring after appropriate elements of TRE workplan are implemented and either the toxicity drops below "trigger" levels in (2), above, or, based on the results of the TRE, the Executive Officer authorizes a return to routine monitoring.

b. Test Species and Methods

The Discharger shall conduct routine monitoring with the test species and protocols specified in Section V.B of the MRP (**Attachment E**). The Discharger shall also perform Chronic Toxicity Screening Phase monitoring as described in the Appendix E-1 of the MRP (Attachment E). Chronic Toxicity Monitoring Screening Phase Requirements, Critical Life Stage Toxicity Tests and definitions of terms used in the chronic toxicity monitoring are identified in **Appendices E-1 and E-2** of the MRP (**Attachment E**).

## B. Effluent Limitations – Discharge Point 002

**1.** The Discharger shall maintain compliance with the following effluent limitations at Discharge Point 002 with compliance measured at Monitoring Location EFF-002 as described in the attached MRP (Attachment E).

**Table 8. Effluent Limitations – Discharge Point 002**

| Parameter | Units | Effluent Limitations | | | | |
|---|---|---|---|---|---|---|
| | | Average Monthly | Average Weekly | Maximum Daily | Instantaneous Minimum | Instantaneous Maximum |
| Chlorine, Total Residual[1] | mg/l | -- | -- | -- | -- | 0.0 |
| Cyanide [2] | µg/l | 20 | -- | 44 | | |

[1] This requirement is defined as below the limit of detection in standard test methods, as defined in the latest edition of Standard Methods for the Examination of Water and Wastewater. For total residual chlorine (TRC) detection levels, the Discharger shall use a method for analysis of TRC that is identified as approved by USEPA for analysis of wastewaters at 40 CFR Part 136. The method of analysis shall achieve a method detection limit (MDL) at least as low as that achieved by the Amperometric Titration Method (4500-Cl D from *Standard Methods for Examination of Water and Wastewater*, Edition 20). The State Water Board is considering a statewide policy on chlorine residual. This Order may be reopened in the future to reflect any changes relating to chlorine residual.

### C. Mercury Mass Emission Limitation

Until TMDL and Waste Load Allocation (WLA) efforts for mercury provide enough information to establish a different WQBEL, the Discharger shall demonstrate that the total mercury mass loading from Discharge Point 001 (Monitoring Location EFF-001A) to Lower San Francisco Bay via the NBSU has not increased by complying with the following:

1. Mass Emission Limit: The mass emission limit for mercury is 0.0041 kilograms per month (kg/month). The total mercury mass load shall not exceed this limit.

2. Compliance with this limit shall be evaluated using a running annual average mass load. Running annual averages shall be calculated by taking the arithmetic average of the current monthly mass loading value (see sample calculation below) and the previous 11 months of values. Sample calculation:

   Flow (MGD) = Average of monthly plant effluent flows in MGD.

   Constituent Concentration (μg/l) = Average of monthly effluent concentration measurements in μg/l. If more than one measurement is obtained in a calendar month, the average of these measurements is used as the monthly value for that month. If test results are less than the method detection limit used, the measurement value is assumed to be equal to the method detection limit.

   Mass Loading (kg/month) = (Flow) x (Constituent Concentration) x 0.1151.

   This mass emission limit will be superseded upon implantation, through amendment of this Order or issuance of a separate permit, of a TMDL and WLA for mercury. According to the anti-backsliding rule in the Clean Water Act, Section 402(o), the permit may be modified to include a less stringent requirement following completion of a TMDL and WLA.

### D. Reclamation Specifications

Not Applicable

## V. RECEIVING WATER LIMITATIONS

### A. Surface Water Limitations

1. Receiving water limitations are based on water quality objectives contained in the Basin Plan and are a required part of this Order. The discharges shall not cause the following in Lower San Francisco Bay:

   a. Floating, suspended, or deposited macroscopic particulate matter or foams;

   b. Bottom deposits or aquatic growths to the extent that such deposits or growths cause nuisance or adversely affect beneficial uses;

c. Alteration of temperature, turbidity, or apparent color beyond present natural background levels;

d. Visible, floating, suspended, or deposited oil and other products of petroleum origin; and

e. Toxic or other deleterious substances to be present in concentrations or quantities which will cause deleterious effects on wildlife, waterfowl, or other aquatic biota, or which render any of these unfit for human consumption, either at levels created in the receiving waters or as a result of biological concentration.

2. The discharge of waste shall not cause the following limitations to be exceeded in waters of the State within one foot of the water surface:

a. Dissolved Oxygen 5.0 mg/l, minimum

The median dissolved oxygen concentration for any three consecutive months shall not be less than 80% of the dissolved oxygen content at saturation. When natural factors cause concentrations less than that specified above, the discharge shall not cause further reduction in ambient dissolved oxygen concentrations.

b. Dissolved Sulfide Natural background levels

c. pH Within 6.5 and 8.5

d. Nutrients Waters shall not contain biostimulatory substances in concentrations that promote aquatic growths to the extent that such as growths cause nuisance or adversely affect beneficial uses.

### B. Groundwater Limitations

Not Applicable

## VI. PROVISIONS

### A. Standard Provisions

1. The Discharger shall comply with Federal Standard Provisions included in **Attachment D** of this Order.

2. The Discharger shall comply with all applicable items of the *Standard Provisions and Reporting Requirements for NPDES Surface Water Discharge Permits, August 1993* **(Attachment G),** including any amendments thereto. Where provisions or reporting requirements specified in this Order and/or Attachment G are different from equivalent or related provisions or reporting requirements given in the Standard Provisions in Attachment D, the specifications of this Order and/or Attachment G

shall apply in areas where these provisions are more stringent. Duplicative requirements in the federal Standard Provisions in VI.A.1, above (**Attachment D**) and the regional Standard Provisions (**Attachment G**) are not separate requirements. A violation of a duplicative requirement does not constitute two separate violations.

## B. Monitoring and Reporting Program (MRP) Requirements

The Discharger shall comply with the MRP, and future revisions thereto, in **Attachment E** of this Order. The Discharger shall also comply with the requirements contained in *Self Monitoring Programs, Part A*, August 1993 (**Attachment G**).

## C. Special Provisions

### 1. Re-opener Provisions

The Regional Water Board may modify or reopen this Order prior to its expiration date in any of the following circumstances as allowed by law:

a. If present or future investigations demonstrate that the discharge(s) governed by this Order will have, or will cease to have, a reasonable potential to cause or contribute to adverse impacts on water quality and/or beneficial uses of the receiving waters.

b. If new or revised WQOs or TMDLs come into effect for the San Francisco Bay estuary and contiguous water bodies (whether statewide, regional, or site-specific). In such cases, effluent limitations in this Order will be modified as necessary to reflect updated WQOs and waste load allocations in TMDLs. Adoption of effluent limitations contained in this Order is not intended to restrict in any way future modifications based on legally adopted WQOs, TMDLs, or as otherwise permitted under Federal regulations governing NPDES permit modifications.

c. If translator or other water quality studies provide a basis for determining that a permit condition(s) should be modified.

d. If administrative or judicial decision on a separate NPDES permit or WDR that addresses requirements similar to this discharge.

e. Or as otherwise authorized by law.

The Dischargers may request permit modification based on the above. The Dischargers shall include in any such request an antidegradation and anti-backsliding analysis.

## 2. Special Studies, Technical Reports and Additional Monitoring Requirements

### a. Effluent Characterization for Selected Constituents

The Discharger shall monitor and evaluate the discharge collected from sample monitoring location EFF-001A for the constituents listed in Enclosure A of the Regional Water Board's August 6, 2001 Letter, according to the sampling frequency specified in the attached MRP (Attachment E). Compliance with this requirement shall be achieved in accordance with the specifications stated in the Regional Water Board's August 6, 2001 Letter under Effluent Monitoring for Major Dischargers.

The Discharger shall, on an annual basis, evaluate if concentrations of any constituent increase over past performance. The Discharger shall investigate the cause of the increase. The investigation may include, but need not be limited to, an increase in the effluent monitoring frequency, monitoring of internal process streams, and monitoring of influent sources. This may be satisfied through identification of these constituents as "Pollutants of Concern" in the Discharger's Pollutant Minimization Program described in Provision C.3.b, below. A summary of the annual evaluation of data and source investigation activities shall also be reported in the annual self-monitoring report.

A final report that presents all the data shall be submitted to the Regional Water Board no later than 180 days prior to the Order expiration date. This final report shall be submitted with the application for permit reissuance.

### b. Ambient Background Receiving Water Study

The Discharger shall collect or participate in collecting background ambient receiving water monitoring for priority pollutants that is required to perform RPA and to calculate effluent limitations. The data on the conventional water quality parameters (pH, salinity, and hardness) shall also be sufficient to characterize these parameters in the receiving water at a point after the discharge has mixed with the receiving waters. This provision may be met through monitoring through the Collaborative Bay Area Clean Water Agencies (BACWA) Study, or a similar ambient monitoring program for San Francisco Bay. This Order may be reopened, as appropriate, to incorporate effluent limitations or other requirements based on Regional Water Board review of these data.

The Discharger shall submit a final report that presents all the data to the Regional Water Board 180 days prior to Order expiration. This final report shall be submitted with the application for permit reissuance.

### c. Optional Mass Offset

If the Discharger can demonstrate that further net reductions of the total mass loadings of 303(d)-listed pollutants to the receiving water cannot be achieved through economically feasible measures such as aggressive source control,

wastewater reuse, and treatment plant optimization, but only through a mass offset program, the Discharger may submit to the Regional Water Board for approval a mass offset plan to reduce 303(d)-listed pollutants to the same watershed or drainage basin. The Regional Water Board may modify this Order to allow an approved mass offset program.

### 3. Best Management Practices and Pollution Minimization

#### a. Pollution Minimization Program

The Discharger shall continue to improve, in a manner acceptable to the Executive Officer, its existing Pollutant Minimization Program to reduce pollutant loadings of to the treatment plant and therefore to the receiving waters. The Discharger shall implement any applicable additional pollutant minimization measures described in Basin Plan implementation requirements associated with the copper SSO and cyanide SSO if and when each of those SSOs become effective and alternate limitations take effect.

#### b. Annual Pollution Minimization Report

The Discharger shall submit an annual report, acceptable to the Executive Officer, no later than February 28th of each calendar year. The annual report shall cover January through December of the preceding year. Each annual report shall include at least the following information:

(1) *A brief description of its treatment plant, treatment plant processes and service area.*

(2) *A discussion of the current pollutants of concern.* Periodically, the Discharger shall determine which pollutants are currently a problem and/or which pollutants may be potential future problems. This discussion shall include the reasons why the pollutants were chosen.

(3) *Identification of sources for the pollutants of concern.* This discussion shall include how the Discharger intends to estimate and identify pollutant sources. The Discharger should also identify sources or potential sources not directly within the ability or authority of the Discharger to control, such as pollutants in the potable water supply and air deposition.

(4) *Identification of tasks to reduce the sources of the pollutants of concern.* This discussion shall identify and prioritize tasks to address the Discharger's pollutants of concern. The Discharger may implement the tasks themselves or participate in group, regional, or national tasks that will address its pollutants of concern whenever it is efficient and appropriate to do so. A time line shall be included for the implementation of each task.

(5) *Outreach to employees.* The Discharger shall inform its employees about the pollutants of concern, potential sources, and how they might be able to help

reduce the discharge of these pollutants. The Discharger may provide a forum for employees to provide input to the program.

(6) *Continuation of Public Outreach Program. The* Discharger shall prepare a public outreach program to communicate pollution minimization measures to its service area. Outreach may include participation in existing community events such as county fairs, initiating new community events such as displays and contests during Pollution Prevention Week, conducting school outreach programs, conducting plant tours, and providing public information in various media. Information shall be specific to target audiences. The Discharger shall coordinate with other agencies as appropriate.

(7) *Discussion of criteria used to measure Program's and tasks' effectiveness.* The Discharger shall establish criteria to evaluate the effectiveness of its Pollution Minimization Program. This discussion shall include of the specific criteria used to measure the effectiveness of each of the tasks in item b(3), b(4), b(5), and b(6).

(8) *Documentation of efforts and progress.* This discussion shall detail all of the Discharger's activities in the Pollution Minimization Program during the reporting year.

(9) *Evaluation of Program's and tasks' effectiveness.* The Discharger shall use the criteria established in b. to evaluate the Program's and tasks' effectiveness.

(10) *Identification of specific tasks and time schedules for future efforts.* Based on the evaluation, the Discharger shall detail how it intends to continue or change its tasks to more effectively reduce the amount of pollutants to the treatment plant and subsequently its effluent.

**c. Pollutant Minimization Program for Reportable Priority Pollutants**

The Discharger shall develop and conduct a Pollutant Minimization Program (PMP) as further described below when there is evidence (e.g., sample results reported as DNQ when the effluent limitation is less than the MDL, sample results from analytical methods more sensitive than those methods required by this Order, presence of whole effluent toxicity, health advisories for fish consumption, results of benthic or aquatic organism tissue sampling) that a priority pollutant is present in the effluent above an effluent limitation and either:

(1) A sample result is reported as DNQ and the effluent limitation is less than the RL; or

(2) A sample result is reported as ND and the effluent limitation is less than the MDL, using definitions described in the SIP.

**d. Requirements of a Pollutant Minimization Program**

If triggered by the reasons in c. above, the Discharger's PMP shall include, but not be limited to, the following actions and submittals acceptable to the Regional Water Board:

(1) An annual review and semi-annual monitoring of potential sources of the reportable priority pollutant(s), which may include fish tissue monitoring and other bio-uptake sampling, or alternative measures approved by the Executive Officer when it is demonstrated that source monitoring is unlikely to produce useful analytical data;

(2) Quarterly monitoring for the reportable priority pollutant(s) in the influent to the wastewater treatment system, or alternative measures approved by the Executive Officer, when it is demonstrated that influent monitoring is unlikely to produce useful analytical data;

(3) Submittal of a control strategy designed to proceed toward the goal of maintaining concentrations of the reportable priority pollutant(s) in the effluent at or below the effluent limitation;

(4) Implementation of appropriate cost-effective control measures for the reportable priority pollutant(s), consistent with the control strategy; and

(5) The annual report required by 3.b. above, shall specifically address the following items:

i. All PMP monitoring results for the previous year;

ii. A list of potential sources of the reportable priority pollutant(s);

iii. A summary of all actions undertaken pursuant to the control strategy; and

iv. A description of actions to be taken in the following year.

**4. Requirement to Assure Compliance with Final Limits**

In an effort to assure compliance with final effluent limitations for dioxin-TEQ, aldrin, 4,4-DDT, heptachlor, and heptachlor epoxide, the Discharger shall comply with the following tasks and dates:

**Table 9. Requirements to Assure Compliance with Final Limitations**

| Task | Dioxin compliance | Pesticide compliance |
|---|---|---|
| 1. Submit a plan for identifying all dioxins and Pesticides sources to the discharge. Examples of potential pesticide sources include stored pesticides and pesticide-treated soils near sewer lines. The plan shall, at a minimum, include sampling influent waste streams to identify and quantify pollutant sources. | April 1, 2008 | April 1, 2008 |
| 2. Implement the plan developed in action "2" within 30 days of the deadline for action "2," and submit by the deadline for this action a report that contains an inventory of the pollutant sources. | August 1, 2008 | August 1, 2008 |
| 3. Submit a report documenting development and initial implementation of a program to reduce and prevent the pollutants of concern in the discharge. The program shall consist, at a minimum, of the following elements:<br>(i) Maintain a list of sources of pollutants of concern.<br>(ii) Investigate each source to assess the need to include it in the program.<br>(iii) Identify and implement targeted actions to reduce or eliminate discharges from each source in the program.<br>(iv) Develop and distribute, as appropriate, educational materials regarding the need to prevent sources to the sewer system. | October 1, 2008 | October 1, 2008 |
| 4. Continue to implement the program described in action "3" and submit annual status reports that evaluate its effectiveness and summarize planned changes. Report whether the program has successfully brought the discharge into compliance with the effluent limits. If not, identify and implement additional measures to further reduce discharge. | Annually each February 28 in Best Management Practices and Pollutant Minimization Report required by Permit Provision VI.C.3 | Annually each February 28 in Best Management Practices and Pollutant Minimization Report required by Permit Provision VI.C.3 |
| 5. Full compliance with IV Effluent Limitations and District Specifications IV.A.2.a for aldrin, 4,4-DDT, heptachlor, and heptachlor epoxide. | Not applicable | May 18, 2010 |
| 6. Full compliance with IV Effluent Limitations and District Specifications IV.A.2.a for dioxin- | September 30, 2017 | |

| | | |
|---|---|---|
| TEQ. Alternatively, the Discharger may comply with this limit through implementation of a mass offset strategy for dioxin-TEQ in accordance with policies in effect at that time. | | |

**5. Construction, Operation and Maintenance Specifications**

**a. Wastewater Facilities, Review and Evaluation, and Status Reports**

(1) The Discharger shall operate and maintain its wastewater collection, treatment, and disposal facilities in a manner to ensure that all facilities are adequately staffed, supervised, financed, operated, maintained, repaired, and upgraded as necessary, in order to provide adequate and reliable transport, treatment, and disposal of all wastewater from both existing and planned future wastewater sources under the Discharger's service responsibilities.

(2) The Discharger shall regularly review and evaluate its wastewater facilities and operation practices in accordance with section a.1. above. Reviews and evaluations shall be conducted as an ongoing component of the Discharger's administration of its wastewater facilities.

(3) The Discharger shall provide the Executive Officer, upon request, a report describing the current status of its wastewater facilities and operation practices, including any recommended or planned actions and an estimated time schedule for these actions. The Discharger shall also include, in each annual self-monitoring report, a description or summary of review and evaluation procedures, and applicable wastewater facility programs or capital improvement projects.

**b. Operations and Maintenance Manual (O&M), Review and Status Reports**

(1) The Discharger shall maintain an O&M Manual as described in the findings of this Order for the Discharger's wastewater facilities. The O&M Manual shall be maintained in usable condition and be available for reference and use by all applicable personnel.

(2) The Discharger shall regularly review, revise, or update, as necessary, the O&M Manual(s) to ensure that the document(s) may remain useful and relevant to current equipment and operation practices. Reviews shall be conducted annually, and revisions or updates shall be completed as necessary. For any significant changes in treatment facility equipment or operation practices, applicable revisions shall be completed within 90 days of completion of such changes.

(3) The Discharger shall provide the Executive Officer, upon request, a report describing the current status of its O&M manual, including any recommended

or planned actions and an estimated time schedule for these actions. The Discharger shall also include, in each annual self-monitoring report, a description or summary of review and evaluation procedures and applicable changes to its operations and maintenance manual.

**c. Contingency Plan, Review and Status Reports**

(1) The Discharger shall maintain a Contingency Plan as required by Regional Water Board Resolution No. 74-10 (**Attachment G**) and as prudent in accordance with current municipal facility emergency planning. The discharge of pollutants in violation of this Order where the Discharger has failed to develop and/or adequately implement a Contingency Plan will be the basis for considering such discharge a willful and negligent violation of this Order pursuant to Section 13387 of the California Water Code.

(2) The Discharger shall regularly review and update, as necessary, the Contingency Plan so that the plan may remain useful and relevant to current equipment and operation practices. Reviews shall be conducted annually, and updates shall be completed as necessary.

(3) The Discharger shall provide the Executive Officer, upon request, a report describing the current status of its Contingency Plan review and update. The Discharger shall also include, in each annual self-monitoring report, a description or summary of review and evaluation procedures and applicable changes to its Contingency Plan.

**6. Special Provisions for POTWs**

**a. Sludge Management Practices Requirements**

(1) All sludge generated by the Discharger must be disposed of in a municipal solid waste landfill, reused by land application, or disposed of in a sludge-only landfill in accordance with 40 CFR Part 503. If the Discharger desires to dispose of sludge by a different method, a request for permit modification must be submitted to USEPA 180 days before start-up of the alternative disposal practice. All the requirements in 40 CFR Part 503 are enforceable by USEPA whether or not they are stated in an NPDES permit or other permit issued to the Discharger. The Regional Water Board should be copied on relevant correspondence and reports forwarded to USEPA regarding sludge management practices.

(2) Sludge treatment, storage and disposal or reuse shall not create a nuisance, such as objectionable odors or flies, or result in groundwater contamination.

(3) The Discharger shall take all reasonable steps to prevent or minimize any sludge use or disposal which has a likelihood of adversely affecting human health or the environment.

(4) The discharge of sludge shall not cause waste material to be in a position where it is or can be carried from the sludge treatment and storage site and deposited in waters of the State.

(5) The sludge treatment and storage site shall have facilities adequate to divert surface runoff from adjacent areas, to protect boundaries of the site from erosion, and to prevent any conditions that would cause drainage from the materials in the temporary storage site. Adequate protection is defined as protection from at least a 100-year storm and protection from the highest possible tidal stage that may occur.

(6) For sludge that is applied to the land, placed on a surface disposal site, or fired in a sludge incinerator as defined in 40 CFR §503, the Discharger shall submit an annual report to USEPA and the Regional Water Board containing monitoring results and pathogen and vector attraction reduction requirements as specified by 40 CFR §503, postmarked February 15 of each year, for the period covering the previous calendar year.

(7) Sludge that is disposed of in a municipal solid waste landfill must meet the requirements of 40 CFR Part 258. In the annual self-monitoring report, the Discharger shall include the amount of sludge disposed of and the landfill(s) to which it was sent.

(8) Permanent on-site sludge storage or disposal activities are not authorized by this Order. A report of Waste Discharge shall be filed and the site brought into compliance with all applicable regulations prior to commencement of any such activity by the Discharger.

(9) Sludge Monitoring and Reporting Provisions of this Regional Water Board's Standard Provisions (**Attachment G**), apply to sludge handling, disposal and reporting practices.

(10) The Regional Water Board may amend this Order prior to expiration if changes occur in applicable state and federal sludge regulations.

**b. Sanitary Sewer Overflows and Sewer System Management Plan**

The Discharger's collection system is part of the facility that is subject to this Order. As such, the Discharge must properly operate and maintain its collection system (Attachment D, Standard Provisions - Permit Compliance, subsection I.D). The Discharger must report any noncompliance (Attachment D, Standard Provision - Reporting, subsections V.E.1 and V.E.2), and mitigate any discharge from the Discharger's collection system in violation of this Order (Attachment D, Standard Provisions - Permit Compliance, subsection I.C). The General Waste Discharge Requirements for Collection System Agencies (Order No. 2006-0003 DWQ) has requirements for operation and maintenance of collection systems and for reporting and mitigating sanitary sewer overflows. While the Discharger must comply with both the General Waste Discharge Requirements for Collection System Agencies (General Collection System WDR) and this Order, the General Collection System WDR more clearly and specifically stipulates requirements for operation and maintenance and for reporting and mitigating sanitary sewer overflows. Implementation of the General Collection System WDR requirements for proper operation and maintenance and mitigation of spills will satisfy the corresponding federal NPDES requirements specified in this Order. Following reporting requirements in the General Collection System WDR will satisfy NPDES reporting requirements for sewage spills. Furthermore, the Discharger shall comply with the schedule for development of sewer system management plans (SSMPs) as indicated in the letter issued by the Regional Water Board on July 7, 2005, pursuant to Water Code Section 13267. Until the statewide on-line reporting system becomes operational, the Discharger shall report sanitary sewer overflows electronically according to the Regional Water Board's SSO reporting program.

**7. Other Special Provisions**

**a. Cyanide Action Plan**

The Discharger shall initiate implementation of an action plan for cyanide as described in Appendix I of “Staff Report on Proposed Site-Specific Water Quality Objectives for Cyanide for San Francisco Bay”, December 4, 2006.

**b. Copper Action Plan**

If and when the copper alternate limits in IV become effective, the Discharger shall initiate implementation of an action plan for copper, consistent with the copper SSO Basin Plan Amendment.

## VII. COMPLIANCE DETERMINATION

Compliance with the effluent limitations contained in section IV of this Order will be determined as specified below:

### A. General.

Compliance with effluent limitations for priority pollutants shall be determined using sample reporting protocols defined in the MRP, Attachment A and Section VI of the Fact Sheet of this Order. For purposes of reporting and administrative enforcement by the Regional and State Water Boards, the Discharger shall be deemed out of compliance with effluent limitations if the concentration of the priority pollutant in the monitoring sample is greater than the effluent limitation and greater than or equal to the reporting level (RL).

### B. Multiple Sample Data.

When determining compliance with an AMEL or MDEL for priority pollutants and more than one sample result is available, the Discharger shall compute the arithmetic mean unless the data set contains one or more reported determinations of “Detected, but Not Quantified” (DNQ) or “Not Detected” (ND). In those cases, the Discharger shall compute the median in place of the arithmetic mean in accordance with the following procedure:

1. The data set shall be ranked from low to high, ranking the reported ND determinations lowest, DNQ determinations next, followed by quantified values (if any). The order of the individual ND or DNQ determinations is unimportant.

2. The median value of the data set shall be determined. If the data set has an odd number of data points, then the median is the middle value. If the data set has an even number of data points, then the median is the average of the two values around the middle unless one or both of the points are ND or DNQ, in which case the median value shall be the lower of the two data points where DNQ is lower than a value and ND is lower than DNQ.

## ATTACHMENT A – DEFINITIONS

**Arithmetic Mean ($\mu$),** also called the average, is the sum of measured values divided by the number of samples. For ambient water concentrations, the arithmetic mean is calculated as follows:

Arithmetic mean = $\mu = \Sigma x / n$ where: $\Sigma x$ is the sum of the measured ambient water concentrations, and n is the number of samples.

**Average Monthly Effluent Limitation (AMEL):** the highest allowable average of daily discharges over a calendar month, calculated as the sum of all daily discharges measured during a calendar month divided by the number of daily discharges measured during that month.

**Average Weekly Effluent Limitation (AWEL):** the highest allowable average of daily discharges over a calendar week (Sunday through Saturday), calculated as the sum of all daily discharges measured during a calendar week divided by the number of daily discharges measured during that week.

**Bioaccumulative** pollutants are those substances taken up by an organism from its surrounding medium through gill membranes, epithelial tissue, or from food and subsequently concentrated and retained in the body of the organism.

**Carcinogenic** pollutants are substances that are known to cause cancer in living organisms.

**Coefficient of Variation (*CV*)** is a measure of the data variability and is calculated as the estimated standard deviation divided by the arithmetic mean of the observed values.

**Daily Discharge:** Daily Discharge is defined as either: (1) the total mass of the constituent discharged over the calendar day (12:00 am through 11:59 pm) or any 24-hour period that reasonably represents a calendar day for purposes of sampling (as specified in the Order), for a constituent with limitations expressed in units of mass or; (2) the unweighted arithmetic mean measurement of the constituent over the day for a constituent with limitations expressed in other units of measurement (e.g., concentration).

The daily discharge may be determined by the analytical results of a composite sample taken over the course of one day (a calendar day or other 24-hour period defined as a day) or by the arithmetic mean of analytical results from one or more grab samples taken over the course of the day.

For composite sampling, if 1 day is defined as a 24-hour period other than a calendar day, the analytical result for the 24-hour period will be considered as the result for the calendar day in which the 24-hour period ends.

**Detected, but Not Quantified (DNQ)** are those sample results less than the RL, but greater than or equal to the laboratory's MDL.

**Dilution Credit** is the amount of dilution granted to a discharge in the calculation of a water quality-based effluent limitation, based on the allowance of a specified mixing zone. It is calculated from the dilution ratio or determined through conducting a mixing zone study or modeling of the discharge and receiving water.

**Effluent Concentration Allowance (ECA)** is a value derived from the water quality criterion/objective, dilution credit, and ambient background concentration that is used, in conjunction with the coefficient of variation for the effluent monitoring data, to calculate a long-term average (LTA) discharge concentration. The ECA has the same meaning as waste load allocation (WLA) as used in U.S. EPA guidance (Technical Support Document For Water Quality-based Toxics Control, March 1991, second printing, EPA/505/2-90-001).

**Enclosed Bays** means indentations along the coast that enclose an area of oceanic water within distinct headlands or harbor works. Enclosed bays include all bays where the narrowest distance between the headlands or outermost harbor works is less than 75 percent of the greatest dimension of the enclosed portion of the bay. Enclosed bays include, but are not limited to, Humboldt Bay, Bodega Harbor, Tomales Bay, Drake's Estero, San Francisco Bay, Morro Bay, Los Angeles-Long Beach Harbor, Upper and Lower Newport Bay, Mission Bay, and San Diego Bay. Enclosed bays do not include inland surface waters or ocean waters.

**Estimated Chemical Concentration** is the estimated chemical concentration that results from the confirmed detection of the substance by the analytical method below the ML value.

**Estuaries** means waters, including coastal lagoons, located at the mouths of streams that serve as areas of mixing for fresh and ocean waters. Coastal lagoons and mouths of streams that are temporarily separated from the ocean by sandbars shall be considered estuaries. Estuarine waters shall be considered to extend from a bay or the open ocean to a point upstream where there is no significant mixing of fresh water and seawater. Estuarine waters include~~d~~, but are not limited to, the Sacramento-San Joaquin Delta, as defined in Water Code section 12220, Suisun Bay, Carquinez Strait downstream to the Carquinez Bridge, and appropriate areas of the Smith, Mad, Eel, Noyo, Russian, Klamath, San Diego, and Otay rivers. Estuaries do not include inland surface waters or ocean waters.

**Inland Surface Waters** are all surface waters of the State that do not include the ocean, enclosed bays, or estuaries.

**Instantaneous Maximum Effluent Limitation:** the highest allowable value for any single grab sample or aliquot (i.e., each grab sample or aliquot is independently compared to the instantaneous maximum limitation).

**Instantaneous Minimum Effluent Limitation:** the lowest allowable value for any single grab sample or aliquot (i.e., each grab sample or aliquot is independently compared to the instantaneous minimum limitation).

**Maximum Daily Effluent Limitation (MDEL)** means the highest allowable daily discharge of a pollutant, over a calendar day (or 24-hour period). For pollutants with limitations expressed in units of mass, the daily discharge is calculated as the total mass of the pollutant discharged

over the day. For pollutants with limitations expressed in other units of measurement, the daily discharge is calculated as the arithmetic mean measurement of the pollutant over the day.

**Median** is the middle measurement in a set of data. The median of a set of data is found by first arranging the measurements in order of magnitude (either increasing or decreasing order). If the number of measurements (*n*) is odd, then the median = $X_{(n+1)/2}$. If *n* is even, then the median = $(X_{n/2} + X_{(n/2)+1})/2$ (i.e., the midpoint between the *n*/2 and *n*/2+1).

**Method Detection Limit (MDL)** is the minimum concentration of a substance that can be measured and reported with 99 percent confidence that the analyte concentration is greater than zero, as defined in title 40 of the Code of Federal Regulations, Part 136, Attachment B, revised as of July 3, 1999.

**Minimum Level (ML)** is the concentration at which the entire analytical system must give a recognizable signal and acceptable calibration point. The ML is the concentration in a sample that is equivalent to the concentration of the lowest calibration standard analyzed by a specific analytical procedure, assuming that all the method specified sample weights, volumes, and processing steps have been followed.

**Mixing Zone** is a limited volume of receiving water that is allocated for mixing with a wastewater discharge where water quality criteria can be exceeded without causing adverse effects to the overall water body.

**Not Detected (ND)** are those sample results less than the laboratory's MDL.

**Ocean Waters** are the territorial marine waters of the State as defined by California law to the extent these waters are outside of enclosed bays, estuaries, and coastal lagoons. Discharges to ocean waters are regulated in accordance with the State Water Board's California Ocean Plan.

**Persistent** pollutants are substances for which degradation or decomposition in the environment is nonexistent or very slow.

**Pollutant Minimization Program (PMP)** means waste minimization and pollution prevention actions that include, but are not limited to, product substitution, waste stream recycling, alternative waste management methods, and education of the public and businesses. The goal of the PMP shall be to reduce all potential sources of a priority pollutant(s) through pollutant minimization (control) strategies, including pollution prevention measures as appropriate, to maintain the effluent concentration at or below the water quality-based effluent limitation. Pollution prevention measures may be particularly appropriate for persistent bioaccumulative priority pollutants where there is evidence that beneficial uses are being impacted. The Regional Water Board may consider cost effectiveness when establishing the requirements of a PMP. The completion and implementation of a Pollution Prevention Plan, if required pursuant to Water Code section 13263.3(d), shall be considered to fulfill the PMP requirements.

**Pollution Prevention** means any action that causes a net reduction in the use or generation of a hazardous substance or other pollutant that is discharged into water and includes, but is

not limited to, input change, operational improvement, production process change, and product reformulation (as defined in Water Code section 13263.3). Pollution prevention does not include actions that merely shift a pollutant in wastewater from one environmental medium to another environmental medium, unless clear environmental benefits of such an approach are identified to the satisfaction of the State or Regional Water Board.

**Reporting Level (RL)** is the ML (and its associated analytical method) chosen by the Discharger for reporting and compliance determination from the MLs included in this Order. The MLs included in this Order correspond to approved analytical methods for reporting a sample result that are selected by the Regional Water Board either from Appendix 4 of the SIP in accordance with section 2.4.2 of the SIP or established in accordance with section 2.4.3 of the SIP. The ML is based on the proper application of method-based analytical procedures for sample preparation and the absence of any matrix interferences. Other factors may be applied to the ML depending on the specific sample preparation steps employed. For example, the treatment typically applied in cases where there are matrix-effects is to dilute the sample or sample aliquot by a factor of ten. In such cases, this additional factor must be applied to the ML in the computation of the RL.

**Satellite Collection System** is the portion, if any, of a sanitary sewer system owned or operated by a different public agency than the agency that owns and operates the wastewater treatment facility that a sanitary sewer system is tributary to.

**Source of Drinking Water** is any water designated as municipal or domestic supply (MUN) in a Regional Water Board Basin Plan.

**Standard Deviation ($\sigma$)** is a measure of variability that is calculated as follows:

$$\sigma = (\sum[(x - \mu)^2]/(n - 1))^{0.5}$$

where:
x is the observed value;
$\mu$ is the arithmetic mean of the observed values; and
n is the number of samples.

**Toxicity Reduction Evaluation (TRE)** is a study conducted in a step-wise process designed to identify the causative agents of effluent or ambient toxicity, isolate the sources of toxicity, evaluate the effectiveness of toxicity control options, and then confirm the reduction in toxicity. The first steps of the TRE consist of the collection of data relevant to the toxicity, including additional toxicity testing, and an evaluation of facility operations and maintenance practices, and best management practices. A Toxicity Identification Evaluation (TIE) may be required as part of the TRE, if appropriate. (A TIE is a set of procedures to identify the specific chemical(s) responsible for toxicity. These procedures are performed in three phases (characterization, identification, and confirmation) using aquatic organism toxicity tests.)

## ATTACHMENT B - MAP

USGS HUNTERS POINT (CA)
1:24,000
Current: 1993
7.5 minute

# ATTACHMENT C – SFIA MEL LEONG TREATMENT PLANT, SANITARY PLANT: FLOW SCHEMATIC AND AERIAL VIEW OF THE MEL LEONG TREATMENT PLANT SHOWING SAMPLING LOCATIONS

# SANITARY PROCESS

Airport's domestic wastewater from the terminal restrooms, aircrafts, hangars, restaurants, shops, and other facilities is collected through the sanitary sewer collection system. The collected sewage is pumped to the airport's Water Quality Control SBR Plant for treatment. Note that this is only the domestic wastewater, which is separate from the industrial wastewater and storm water run-off. The industrial wastewater and first flush storm run-off are collected through industrial wastewater and storm water collection systems, then treated at the Industrial Wastewater Treatment Plant (see next section for details.)

**1 PRELIMINARY TREATMENT OR HEADWORK**

*Screens*

As wastewater enters the plant, a punched plate barscreen removes all large debris such as sticks, rags, paper, plastic, etc., to prevent equipment damage. The debris is compacted and disposed of.

**2** *Grit Conveyor/Collector*

After passing thru the barscreen, the sewage moves slowly through a grit chamber where sand, gravel and other heavy particles settle out and are collected by a screw conveyor and disposed of.

**3 INFLUENT STORAGE**

*Influent FEB #1 and #2*

*Excess sewage not placed in the SBR tanks is pumped into the Influent Holding Tanks. When SBR influent amounts decrease during night hours, sewage is drained from the Influent Holding Tanks to maintain a steady flow into the SBRs.*

**4** *Sequential Batch Reactor (SBR)*

Sewage is then pumped into one of the three Sequential Batch Reactor tanks. Jet aeration headers blow air within the tanks to activate the biomasses to stabilize the waste. After a settling period, scum floats to the top, activated sludge sinks to the bottom, and the effluent is left in the middle. A decanter brings the effluent to the Effluent F.E.B., the waste activated sludge (WAS) and scum is placed in WAS Holding Tank and the scum is brought to the Belt Press Filter.

**5** Effluent Flow Equalization Basin and Chlorine Contact Channel

Sodium Hypochlorite is added to disinfect the final effluent.

**6** *Combined Effluent Pump Station*

The effluent from both the wastewater treatment plants is pumped to the North Bayside System Unit Outfall, where the treated water is combined with effluent from South San Francisco, Millbrae, Burlingame, and San Mateo for dechlorination and deep water discharge.

**7 SOLIDS THICKENER**

*Gravity Belt Thickener*

The waste activate sludge is drained of its free water prior to entering the digesters.

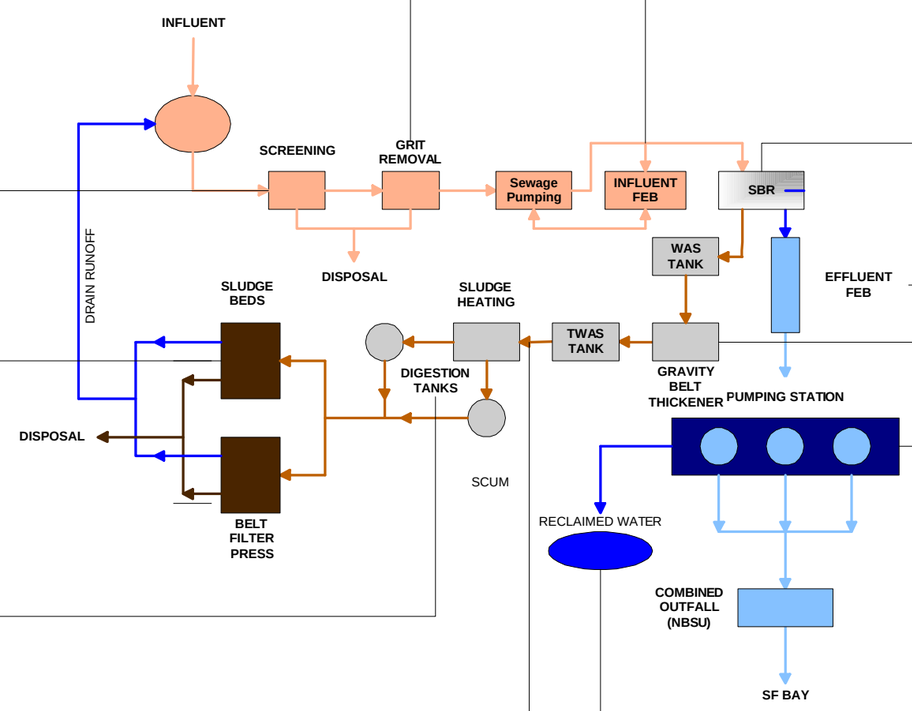


**8** *Anaerobic Digesters*

The anaerobic process at both Digesters stabilizes the solids. Each tank is equipped with a floating cover, which collects sludge gas produced from the digestion process.

**9** *Sludge Beds & Belt FIlter Press*

Beds and press are for the dewatering of digested sludge from the domestic waste. There are different sludge beds for the Industrial Waste Treatment Plant. Dried sludge is removed from the beds and hauled to a landfill. The filtered water is returned to the Headworks and will go through the treatment process again. The dewatered sludge is transferred to a cake hopper where it is stored and later emptied to a truck that hauls it to the landfill.

**10 RECYCLING**

*Energy Recovery*

The collected sludge gas from the Digesters is used as fuel for the sludge heaters. Excess sludge gas flows through a pressure relief valve and is burned at the waste gas burner. A supply of natural gas is provided for heating sludge during periods when an adequate supply of sludge gas is not available.

**10** *Water Reclamation*

A portion of the treated wastewater is reclaimed and re-pressurized for various plant uses.

① INFLUENT SANITARY PROCESS: INF-001 SAN
② INFLUENT INDUSTRIAL WASTE: INF-001 IND
③ EFFLUENT SANITARY PROCESS: EFF-001 SAN
④ EFFLUENT INDUSTRIAL WASTE: EFF-001 IND
⑤ COMBINED EFFLUENT PUMP STATION: EFF-001 A
②
SLUDGE DRYING BEDS
④
SBR TANKS
①
⑤
③
SAN FRANCISCO INTERNATIONAL AIRPORT
MEL LEONG TREATMENT PLANT

# ATTACHMENT D –STANDARD PROVISIONS

## I. STANDARD PROVISIONS – PERMIT COMPLIANCE

### A. Duty to Comply

1. The Discharger must comply with all of the conditions of this Order. Any noncompliance constitutes a violation of the Clean Water Act (CWA) and the California Water Code and is grounds for enforcement action, for permit termination, revocation and reissuance, or modification; or denial of a permit renewal application. (40 CF.R. § 122.41(a).)

2. The Discharger shall comply with effluent standards or prohibitions established under Section 307(a) of the CWA for toxic pollutants and with standards for sewage sludge use or disposal established under Section 405(d) of the CWA within the time provided in the regulations that establish these standards or prohibitions, even if this Order has not yet been modified to incorporate the requirement. (40 C.F.R. § 122.41(a)(1).)

### B. Need to Halt or Reduce Activity Not a Defense

It shall not be a defense for a Discharger in an enforcement action that it would have been necessary to halt or reduce the permitted activity in order to maintain compliance with the conditions of this Order. (40 C.F.R. § 122.41(c).)

### C. Duty to Mitigate

The Discharger shall take all reasonable steps to minimize or prevent any discharge or sludge use or disposal in violation of this Order that has a reasonable likelihood of adversely affecting human health or the environment. (40 C.F.R. § 122.41(d).)

### D. Proper Operation and Maintenance

The Discharger shall at all times properly operate and maintain all facilities and systems of treatment and control (and related appurtenances) which are installed or used by the Discharger to achieve compliance with the conditions of this Order. Proper operation and maintenance also includes adequate laboratory controls and appropriate quality assurance procedures. This provision requires the operation of backup or auxiliary facilities or similar systems that are installed by a Discharger only when necessary to achieve compliance with the conditions of this Order (40 C.F.R. § 122.41(e)).

### E. Property Rights

1. This Order does not convey any property rights of any sort or any exclusive privileges. (40 C.F.R. § 122.41(g).)

2. The issuance of this Order does not authorize any injury to persons or property or invasion of other private rights, or any infringement of state or local law or regulations. (40 C.F.R. § 122.5(c).)

## F. Inspection and Entry

The Discharger shall allow the Regional Water Board, State Water Board, United States Environmental Protection Agency (USEPA), and/or their authorized representatives (including an authorized contractor acting as their representative), upon the presentation of credentials and other documents, as may be required by law, to (40 C.F.R. § 122.41(i); Water Code, § 13383):

1. Enter upon the Discharger's premises where a regulated facility or activity is located or conducted, or where records are kept under the conditions of this Order (40 C.F.R. § 122.41(i)(1));

2. Have access to and copy, at reasonable times, any records that must be kept under the conditions of this Order (40 C.F.R. § 122.41(i)(2));

3. Inspect and photograph, at reasonable times, any facilities, equipment (including monitoring and control equipment), practices, or operations regulated or required under this Order (40 C.F.R. § 122.41(i)(3)); and

4. Sample or monitor, at reasonable times, for the purposes of assuring Order compliance or as otherwise authorized by the CWA or the Water Code, any substances or parameters at any location. (40 C.F.R. § 122.41(i)(4).)

## G. Bypass

1. Definitions

   a. “Bypass” means the intentional diversion of waste streams from any portion of a treatment facility. (40 C.F.R. § 122.41(m)(1)(i).)

   b. “Severe property damage” means substantial physical damage to property, damage to the treatment facilities, which causes them to become inoperable, or substantial and permanent loss of natural resources that can reasonably be expected to occur in the absence of a bypass. Severe property damage does not mean economic loss caused by delays in production. (40 C.F.R. § 122.41(m)(1)(ii).)

2. Bypass not exceeding limitations. The Discharger may allow any bypass to occur which does not cause exceedances of effluent limitations, but only if it is for essential maintenance to assure efficient operation. These bypasses are not subject to the provisions listed in Standard Provisions – Permit Compliance I.G.3, I.G.4, and I.G.5 below. (40 C.F.R. § 122.41(m)(2).)

3. Prohibition of bypass. Bypass is prohibited, and the Regional Water Board may take enforcement action against a Discharger for bypass, unless (40 C.F.R. § 122.41(m)(4)(i)):

    a. Bypass was unavoidable to prevent loss of life, personal injury, or severe property damage (40 C.F.R. § 122.41(m)(4)(i)(A));

    b. There were no feasible alternatives to the bypass, such as the use of auxiliary treatment facilities, retention of untreated wastes, or maintenance during normal periods of equipment downtime. This condition is not satisfied if adequate back-up equipment should have been installed in the exercise of reasonable engineering judgment to prevent a bypass that occurred during normal periods of equipment downtime or preventive maintenance (40 C.F.R. § 122.41(m)(4)(i)(B)); and

    c. The Discharger submitted notice to the Regional Water Board as required under Standard Provisions – Permit Compliance I.G.5 below. (40 C.F.R. § 122.41(m)(4)(i)(C).)

4. The Regional Water Board may approve an anticipated bypass, after considering its adverse effects, if the Regional Water Board determines that it will meet the three conditions listed in Standard Provisions – Permit Compliance I.G.3 above. (40 C.F.R. § 122.41(m)(4)(ii).)

5. Notice

    a. Anticipated bypass. If the Discharger knows in advance of the need for a bypass, it shall submit a notice, if possible at least 10 days before the date of the bypass. (40 C.F.R. § 122.41(m)(3)(i).)

    b. Unanticipated bypass. The Discharger shall submit notice of an unanticipated bypass as required in Standard Provisions - Reporting V.E below (24-hour notice). (40 C.F.R. § 122.41(m)(3)(ii).)

## H. Upset

Upset means an exceptional incident in which there is unintentional and temporary noncompliance with technology based permit effluent limitations because of factors beyond the reasonable control of the Discharger. An upset does not include noncompliance to the extent caused by operational error, improperly designed treatment facilities, inadequate treatment facilities, lack of preventive maintenance, or careless or improper operation. (40 C.F.R. § 122.41(n)(1).)

1. Effect of an upset. An upset constitutes an affirmative defense to an action brought for noncompliance with such technology based permit effluent limitations if the requirements of Standard Provisions – Permit Compliance I.H.2 below are met. No determination made during administrative review of claims that noncompliance was

caused by upset, and before an action for noncompliance, is final administrative action subject to judicial review. (40 C.F.R. § 122.41(n)(2).).

2. Conditions necessary for a demonstration of upset. A Discharger who wishes to establish the affirmative defense of upset shall demonstrate, through properly signed, contemporaneous operating logs or other relevant evidence that (40 C.F.R. § 122.41(n)(3)):

   a. An upset occurred and that the Discharger can identify the cause(s) of the upset (40 C.F.R. § 122.41(n)(3)(i));

   b. The permitted facility was, at the time, being properly operated (40 C.F.R. § 122.41(n)(3)(ii));

   c. The Discharger submitted notice of the upset as required in Standard Provisions – Reporting V.E.2.b below (24-hour notice) (40 C.F.R. § 122.41(n)(3)(iii)); and

   d. The Discharger complied with any remedial measures required under Standard Provisions – Permit Compliance I.C above. (40 C.F.R. § 122.41(n)(3)(iv).)

3. Burden of proof. In any enforcement proceeding, the Discharger seeking to establish the occurrence of an upset has the burden of proof. (40 C.F.R. § 122.41(n)(4).)

## II. STANDARD PROVISIONS – PERMIT ACTION

### A. General

This Order may be modified, revoked and reissued, or terminated for cause. The filing of a request by the Discharger for modification, revocation and reissuance, or termination, or a notification of planned changes or anticipated noncompliance does not stay any Order condition. (40 C.F.R. § 122.41(f).)

### B. Duty to Reapply

If the Discharger wishes to continue an activity regulated by this Order after the expiration date of this Order, the Discharger must apply for and obtain a new permit. (40 C.F.R. § 122.41(b).)

### C. Transfers

This Order is not transferable to any person except after notice to the Regional Water Board. The Regional Water Board may require modification or revocation and reissuance of this Order to change the name of the Discharger and incorporate such other requirements as may be necessary under the CWA and the Water Code. (40 C.F.R. § 122.41(l)(3); § 122.61.)

## III. STANDARD PROVISIONS – MONITORING

A. Samples and measurements taken for the purpose of monitoring shall be representative of the monitored activity. (40 C.F.R. § 122.41(j)(1).)

B. Monitoring results must be conducted according to test procedures under Part 136 or, in the case of sludge use or disposal, approved under Part 136 unless otherwise specified in Part 503 unless other test procedures have been specified in this Order. (40 C.F.R. § 122.41(j)(4); § 122.44(i)(1)(iv).)

## IV. STANDARD PROVISIONS – RECORDS

A. Except for records of monitoring information required by this Order related to the Discharger's sewage sludge use and disposal activities, which shall be retained for a period of at least five years (or longer as required by Part 503), the Discharger shall retain records of all monitoring information, including all calibration and maintenance records and all original strip chart recordings for continuous monitoring instrumentation, copies of all reports required by this Order, and records of all data used to complete the application for this Order, for a period of at least three (3) years from the date of the sample, measurement, report or application. This period may be extended by request of the Regional Water Board Executive Officer at any time. (40 C.F.R. § 122.41(j)(2).)

B. Records of monitoring information shall include:

1. The date, exact place, and time of sampling or measurements (40 C.F.R. § 122.41(j)(3)(i));

2. The individual(s) who performed the sampling or measurements (40 C.F.R. § 122.41(j)(3)(ii));

3. The date(s) analyses were performed (40 C.F.R. § 122.41(j)(3)(iii));

4. The individual(s) who performed the analyses (40 C.F.R. § 122.41(j)(3)(iv));

5. The analytical techniques or methods used (40 C.F.R. § 122.41(j)(3)(v)); and

6. The results of such analyses. (40 C.F.R. § 122.41(j)(3)(vi).)

C. Claims of confidentiality for the following information will be denied (40 C.F.R. § 122.7(b)):

1. The name and address of any permit applicant or Discharger (40 C.F.R. § 122.7(b)(1)); and

2. Permit applications and attachments, permits and effluent data. (40 C.F.R. § 122.7(b)(2).)

## V. STANDARD PROVISIONS – REPORTING

### A. Duty to Provide Information

The Discharger shall furnish to the Regional Water Board, State Water Board, or USEPA within a reasonable time, any information which the Regional Water Board, State Water Board, or USEPA may request to determine whether cause exists for modifying, revoking and reissuing, or terminating this Order or to determine compliance with this Order. Upon request, the Discharger shall also furnish to the Regional Water Board, State Water Board, or USEPA copies of records required to be kept by this Order. (40 C.F.R. § 122.41(h); Wat. Code, § 13267.)

### B. Signatory and Certification Requirements

1. All applications, reports, or information submitted to the Regional Water Board, State Water Board, and/or USEPA shall be signed and certified in accordance with Standard Provisions – Reporting V.B.2, V.B.3, V.B.4, and V.B.5 below. (40 C.F.R. § 122.41(k).)

2. All permit applications shall be signed by either a principal executive officer or ranking elected official. For purposes of this provision, a principal executive officer of a federal agency includes: (i) the chief executive officer of the agency, or (ii) a senior executive officer having responsibility for the overall operations of a principal geographic unit of the agency (e.g., Regional Administrators of USEPA). (40 C.F.R. § 122.22(a)(3).).

3. All reports required by this Order and other information requested by the Regional Water Board, State Water Board, or USEPA shall be signed by a person described in Standard Provisions – Reporting V.B.2 above, or by a duly authorized representative of that person. A person is a duly authorized representative only if:

    a. The authorization is made in writing by a person described in Standard Provisions – Reporting V.B.2 above (40 C.F.R. § 122.22(b)(1));

    b. The authorization specifies either an individual or a position having responsibility for the overall operation of the regulated facility or activity such as the position of plant manager, operator of a well or a well field, superintendent, position of equivalent responsibility, or an individual or position having overall responsibility for environmental matters for the company. (A duly authorized representative may thus be either a named individual or any individual occupying a named position.) (40 C.F.R. § 122.22(b)(2)); and

    c. The written authorization is submitted to the Regional Water Board and State Water Board. (40 C.F.R. § 122.22(b)(3).)

4. If an authorization under Standard Provisions – Reporting V.B.3 above is no longer accurate because a different individual or position has responsibility for the overall operation of the facility, a new authorization satisfying the requirements of Standard

Provisions – Reporting V.B.3 above must be submitted to the Regional Water Board and State Water Board prior to or together with any reports, information, or applications, to be signed by an authorized representative. (40 C.F.R. § 122.22(c).)

5. Any person signing a document under Standard Provisions – Reporting V.B.2 or V.B.3 above shall make the following certification:

   "I certify under penalty of law that this document and all attachments were prepared under my direction or supervision in accordance with a system designed to assure that qualified personnel properly gather and evaluate the information submitted. Based on my inquiry of the person or persons who manage the system or those persons directly responsible for gathering the information, the information submitted is, to the best of my knowledge and belief, true, accurate, and complete. I am aware that there are significant penalties for submitting false information, including the possibility of fine and imprisonment for knowing violations." (40 C.F.R. § 122.22(d).)

## C. Monitoring Reports

1. Monitoring results shall be reported at the intervals specified in the Monitoring and Reporting Program (Attachment E) in this Order. (40 C.F.R. § 122.22(l)(4).)

2. Monitoring results must be reported on a Discharge Monitoring Report (DMR) form or forms provided or specified by the Regional Water Board or State Water Board for reporting results of monitoring of sludge use or disposal practices. (40 C.F.R. § 122.41(l)(4)(i).)

3. If the Discharger monitors any pollutant more frequently than required by this Order using test procedures approved under Part 136 or, in the case of sludge use or disposal, approved under Part 136 unless otherwise specified in Part 503, or as specified in this Order, the results of this monitoring shall be included in the calculation and reporting of the data submitted in the DMR or sludge reporting form specified by the Regional Water Board. (40 C.F.R. § 122.41(l)(4)(ii).)

4. Calculations for all limitations, which require averaging of measurements, shall utilize an arithmetic mean unless otherwise specified in this Order. (40 C.F.R. § 122.41(l)(4)(iii).)

## D. Compliance Schedules

Reports of compliance or noncompliance with, or any progress reports on, interim and final requirements contained in any compliance schedule of this Order, shall be submitted no later than 14 days following each schedule date. (40 C.F.R. § 122.41(l)(5).)

## E. Twenty-Four Hour Reporting

1. The Discharger shall report any noncompliance that may endanger health or the environment. Any information shall be provided orally within 24 hours from the time the Discharger becomes aware of the circumstances. A written submission shall

also be provided within five (5) days of the time the Discharger becomes aware of the circumstances. The written submission shall contain a description of the noncompliance and its cause; the period of noncompliance, including exact dates and times, and if the noncompliance has not been corrected, the anticipated time it is expected to continue; and steps taken or planned to reduce, eliminate, and prevent reoccurrence of the noncompliance. (40 C.F.R. § 122.41(l)(6)(i).)

2. The following shall be included as information that must be reported within 24 hours under this paragraph (40 C.F.R. § 122.41(l)(6)(ii)):

   a. Any unanticipated bypass that exceeds any effluent limitation in this Order. (40 C.F.R. § 122.41(l)(6)(ii)(A).)

   b. Any upset that exceeds any effluent limitation in this Order. (40 C.F.R. § 122.41(l)(6)(ii)(B).)

3. The Regional Water Board may waive the above-required written report under this provision on a case-by-case basis if an oral report has been received within 24 hours. (40 C.F.R. § 122.41(l)(6)(iii).)

**F. Planned Changes**

The Discharger shall give notice to the Regional Water Board as soon as possible of any planned physical alterations or additions to the permitted facility. Notice is required under this provision only when (40 C.F.R. § 122.41(l)(1)):

1. The alteration or addition to a permitted facility may meet one of the criteria for determining whether a facility is a new source in section 122.29(b) (40 C.F.R. § 122.41(l)(1)(i)); or

2. The alteration or addition could significantly change the nature or increase the quantity of pollutants discharged. This notification applies to pollutants that are not subject to effluent limitations in this Order. (40 C.F.R. § 122.41(l)(1)(ii).)

3. The alteration or addition results in a significant change in the Discharger's sludge use or disposal practices, and such alteration, addition, or change may justify the application of permit conditions that are different from or absent in the existing permit, including notification of additional use or disposal sites not reported during the permit application process or not reported pursuant to an approved land application plan. (40 C.F.R.§ 122.41(l)(1)(iii).)

**G. Anticipated Noncompliance**

The Discharger shall give advance notice to the Regional Water Board or State Water Board of any planned changes in the permitted facility or activity that may result in noncompliance with General Order requirements. (40 C.F.R. § 122.41(l)(2).)

### H. Other Noncompliance

The Discharger shall report all instances of noncompliance not reported under Standard Provisions – Reporting V.C, V.D, and V.E above at the time monitoring reports are submitted. The reports shall contain the information listed in Standard Provision – Reporting V.E above. (40 C.F.R. § 122.41(l)(7).)

### I. Other Information

When the Discharger becomes aware that it failed to submit any relevant facts in a permit application, or submitted incorrect information in a permit application or in any report to the Regional Water Board, State Water Board, or USEPA, the Discharger shall promptly submit such facts or information. (40 C.F.R. § 122.41(l)(8).)

## VI. STANDARD PROVISIONS – ENFORCEMENT

A. The Regional Water Board is authorized to enforce the terms of this Order under several provisions of the Water Code, including, but not limited to, sections 13385, 13386, and 13387.

B.

## VII. ADDITIONAL PROVISIONS – NOTIFICATION LEVELS

### A. Publicly-Owned Treatment Works (POTWs)

All POTWs shall provide adequate notice to the Regional Water Board of the following (40 C.F.R. § 122.42(b)):

1. Any new introduction of pollutants into the POTW from an indirect discharger that would be subject to sections 301 or 306 of the CWA if it were directly discharging those pollutants (40 C.F.R. § 122.42(b)(1)); and

2. Any substantial change in the volume or character of pollutants being introduced into that POTW by a source introducing pollutants into the POTW at the time of adoption of this Order. (40 C.F.R. § 122.42(b)(2).)

3. Adequate notice shall include information on the quality and quantity of effluent introduced into the POTW as well as any anticipated impact of the change on the quantity or quality of effluent to be discharged from the POTW. (40 C.F.R. § 122.42(b)(3).)

# ATTACHMENT E – MONITORING AND REPORTING PROGRAM

## Table of Contents

I. General Monitoring Provisions ..... 2
II. Monitoring Locations ..... 3
III. Influent Monitoring Requirements ..... 4
  A. Monitoring Location INF-001 ..... 4
IV. Effluent Monitoring Requirements ..... 5
  A. Monitoring Location – EFF-001-San ..... 5
  B. Monitoring Location – EFF-001A ..... 5
  C. Monitoring Location – EFF-002 ..... 7
V. Whole Effluent Toxicity Testing Requirements ..... 8
VI. Land Discharge Monitoring Requirements ..... 11
VII. Reclamation Monitoring Requirements ..... 11
VIII. Receiving Water Monitoring Requirements ..... 12
  A. Regional Monitoring Program ..... 12
IX. Legend for MRP Tables ..... 12
X. Other Monitoring Requirements ..... 13
  A. Monitoring Location – Overflows and Bypasses (OV-1 thru OV-n) ..... 13
  B. Sludge Monitoring ..... 13
XI. Reporting Requirements ..... 13
  A. General Monitoring and Reporting Requirements ..... 13
  B. Self Monitoring Reports (SMRs) ..... 15
  C. Discharge Monitoring Reports (DMRs) ..... 17
  D. Other Reports ..... 17

## Tables

Table E-1. Test Methods and Minimum Levels for Pollutants with Reasonable Potential ..... 3
Table E-2. Monitoring Station Locations ..... 4
Table E-3. Influent Monitoring ..... 4
Table E-4. Effluent Monitoring – Monitoring Location EFF-001-San ..... 5
Table E-5. Effluent Monitoring – Monitoring Location EFF-001A ..... 6
Table E-6. Effluent Monitoring – Monitoring Location EFF-002 ..... 7
Table E-7. Overflows and Bypasses Monitoring Requirements ..... 13
Table E-8. Monitoring Periods and Reporting Schedule ..... 15

## ATTACHMENT E – MONITORING AND REPORTING PROGRAM (MRP)

NPDES regulations at 40 CFR 122.48 require that all NPDES permits specify monitoring and reporting requirements. Water Code sections 13267 and 13383 also authorize the Regional Water Quality Control Board (Regional Water Board) to require technical and monitoring reports. This MRP establishes monitoring and reporting requirements, which implement the federal and California regulations.

### I. GENERAL MONITORING PROVISIONS

**A.** The Discharger shall comply with the MRP for this Order as adopted by the Regional Water Board, and with all of the Self-Monitoring Program, Part A, adopted August 1993 (SMP). If any discrepancies exist between the MRP and SMP, the MRP prevails.

**B.** Sampling is required during the entire year when discharging. All analyses shall be conducted using current USEPA methods, or that have been approved by the USEPA Regional Administrator pursuant to 40 CFR 136.4 and 40 CFR 136.5, or equivalent methods that are commercially and reasonably available, and that provide quantification of sampling parameters and constituents sufficient to evaluate compliance with applicable effluent limitations and to perform reasonable potential analysis. Equivalent methods must be more sensitive than those specified in 40 CFR 136, must be specified in the permit, and must be approved for use by the Executive Officer, following consultation with the State Water Quality Control Board's Quality Assurance Program.

**C.** Sampling and analysis of additional constituents is required pursuant to Table 1 of the Regional Water Board's August 6, 2001 Letter entitled, *Requirement for Monitoring of Pollutants in Effluent and Receiving Water to Implement New Statewide Regulations and Policy* (**Attachment G**).

**D.** *Minimum Levels.* For compliance and reasonable potential monitoring, analyses shall be conducted using the commercially available and reasonably achievable detection levels that are lower than applicable water quality objectives or criteria, or the effluent limitations, whichever is lower. The objective is to provide quantification of constituents sufficient to allow evaluation of observed concentrations with respect to the Minimum Levels (MLs) given below.

MLs are the concentrations at which the entire analytical system must give a recognizable signal and acceptable calibration point. The ML is the concentration in a sample that is equivalent to the concentration of the lowest calibration standard analyzed by a specific analytical procedure, assuming that all the method specified sample weights, volumes, and processing steps have been followed. All MLs are expressed as µg/l.

Table E-1 lists the test methods the Discharger may use for compliance and reasonable potential monitoring for the pollutants with effluent limitations.

**Table E-1. Test Methods and Minimum Levels for Pollutants with Reasonable Potential**

| CTR # | Constituent | Types of Analytical Methods [1] Minimum Levels (µg/l) | | | | | | | | | | | |
|---|---|---|---|---|---|---|---|---|---|---|---|---|---|
| | | GC | GCMS | LC | Color | FAA | GFAA | ICP | ICPMS | SPGFAA | HYDRIDE | CVAF | DCP |
| 6 | Copper | | | | | 25 | 5 | 10 | 0.5 | 2 | | | |
| 7 | Lead | | | | | 20 | 5 | 5 | 0.5 | 2 | | | |
| 8 | Mercury [2] | | | | | | | | | | | 0.0005 | |
| 9 | Nickel | | | | | 50 | 5 | 20 | 1 | 5 | | | |
| 14 | Cyanide | | | | 5 | | | | | | | | |
| 16a | Dioxin-TEQ[3] | | | | | | | | | | | | |
| 102 | Aldrin | 0.005 | | | | | | | | | | | |
| 103 | alpha-BHC | 0.01 | | | | | | | | | | | |
| 104 | beta-BHC | 0.005 | | | | | | | | | | | |
| 108 | 4,4-DDT | 0.01 | | | | | | | | | | | |
| 109 | 4,4-DDE | 0.05 | | | | | | | | | | | |
| 111 | Dieldrin | 0.01 | | | | | | | | | | | |
| 115 | Endrin | 0.01 | | | | | | | | | | | |
| 117 | Heptachlor | 0.01 | | | | | | | | | | | |
| 118 | Heptachlor Epoxide | 0.01 | | | | | | | | | | | |
| | Ammonia[4] | | | | | | | | | | | | |
| -- | Tributyltin[5 | | 0.005 | | | | | | | | | | |

[1] Analytical Methods / Laboratory techniques are defined as follows:
Color = Colorimetric;
CVAF = Cold Vapor Atomic Fluorescence.
DCP = Direct Current Plasma
FAA = Furnace Atomic Absorption;
GC = Gas Chromatography
GCMS = Gas Chromatography Mass Spectroscopy
GFAA = Graphite Furnace Atomic Absorption;
ICP = Inductively Coupled Plasma
ICPMS = Inductively Coupled Plasma/Mass Spectrometry;
LC = Liquid Chromatography
SPGFAA = Stabilized Platform Graphite Furnace Atomic Absorption (i.e. EPA 200.9)

[2] Mercury: Use ultra-clean sampling (USEPA 1669) to the maximum extent practicable, and ultra-clean analytical methods (USEPA 1631) for mercury monitoring. The Discharger may use alternative methods of analysis (such as USEPA 245), if the alternative method has an ML of 0.0005 µg/l or less.

[3] Use USEPA Method 1613.

[4] Ammonia-N measured by Ammonia Selective Electrode Method, Reference SM 4500-NH3 F (18th Edition) Minimum Detection Level 0.1 mg/l.

[5] To determine tributyltin, the Discharger shall use GC-FPD, GC/MS or an USEPA approved method; the method shall be capable of speciating organotins and detecting concentrations at low limits on the order of 5 ng/l. Alternative methods of analysis must be approved by the Executive Officer.

## II. MONITORING LOCATIONS

The Discharger shall establish the following monitoring locations to demonstrate compliance with the effluent limitations, discharge specifications, and other requirements in this Order:

**Table E-2. Monitoring Station Locations**

| Type of Sampling Location | Monitoring Location Name | Monitoring Location Description |
|---|---|---|
| Influent Station | INF-001-San | Formerly Sampling Station A-001, a point (37°, 38', 12" N and 122°, 23', 4" W) in the Sanitary Plant treatment facilities upstream of the primary sedimentation basins at which all waste tributary to the treatment system is present, and preceding any phase of treatment. |
| Plant Effluent Station | EFF-001-San | Formerly Sampling Station E-001, at any point (37°, 38', 13" N and 122°, 23', 1" W) in the Sanitary Plant after disinfection and prior to combining with effluent from the SFIA Industrial Plant in the pumping station (the combined forcemain-outfall). |
| Plant Effluent Station | EFF-001A | A new monitoring location, at a point (37°, 38', 15" N and 122°, 23', 3" W) after treated effluent from the Sanitary Plant and Industrial Plant are combined in the SFIA Mel Long Treatment Plant pumping station prior to discharge into the North Bayside System Unit (NBSU). |
| Plant Effluent Station | EFF-002 | Formerly Sampling Station E-002, at any point in the NBSU combined outfall after dechlorination between the point of discharge into San Francisco Bay and the point at which all waste tributary to the NBSU combined outfall is present. |

## III. INFLUENT MONITORING REQUIREMENTS

### A. Monitoring Location INF-001

1. The Discharger shall monitor influent to the facility at INF-001-San as follows.

**Table E-3. Influent Monitoring**

| Parameter | Units | Minimum Sampling Frequency | Required Analytical Test Method |
|---|---|---|---|
| | | 24 hour composite (2) | |
| ***Conventional Pollutants*** | | | |
| Flow rate (1) | MGD | Cont/Daily | meter |
| Carbonaceous Biochemical Oxygen Demand (5-day @ 20 Deg. C) ($CBOD_5$) | mg/l | 3/Week | (3) |
| Total Suspended Solids (TSS) | mg/l | 3/Week | (3) |

(1) Monitoring Reports shall include the following information:

Daily: Total Daily Flow Volume (MG)
Daily: Daily Average Flow (MGD)
Monthly: Monthly Average Flow (MGD)
Monthly: Maximum Daily Flow (MGD)
Monthly: Minimum Daily Flow (MGD)
Monthly: Total Flow Volume (MG)

(2) Composite samples of influent shall be collected on varying days selected at random and shall not include any plant recirculation or other side stream waste. Deviation from this must be approved by the Executive Officer.

(3) Pollutants shall be analyzed using the analytical methods described in 40 CFR Part 136.

# IV. EFFLUENT MONITORING REQUIREMENTS

## A. Monitoring Location – EFF-001-San

1. The Discharger shall monitor treated effluent from the facility at EFF-001 as follows:

### Table E-4. Effluent Monitoring – Monitoring Location EFF-001-San

| Parameter | Units | Minimum Sampling Frequency | | | Required Analytical Test Method |
|---|---|---|---|---|---|
| | | Continuous | 24 hour composite | Grab | |
| Flow[(2)] | MGD | Cont/D | | | meter |
| $CBOD_5$[(3)] | mg/l, kg/day | | 3/Week | | [(1)] |
| TSS[(3)] | mg/l, kg/day | | 3/Week | | [(1)] |
| Oil and Grease[(4)] | mg/l | | | 2/Month | [(1)] |
| pH[(5)] | s.u. | | | 3/Week | [(1)] |
| Visual Observations[(6)] | | | | Daily | |

(1) Pollutants shall be analyzed using the analytical methods described in 40 CFR Part 136.

(2) Flows shall be monitored continuously and the following shall be reported in monthly self-monitoring reports:

a. Daily Average Flow (MGD)
b. Total Daily Flow Volume (MG)
c. Monthly Average Flow (MGD)
d. MonthlyTotal Flow Volume (MG)
e. Average daily maximum and average daily minimum flow rates (MGD) in each month.

(3) The percent removal for $CBOD_5$ and TSS shall be reported for each calendar month.

(4) Each oil and grease sampling event shall consist of a composite sample comprised of three grab samples taken at equal intervals during the sampling date, with each grab sample being collected in a glass container. Each glass container used for sample collection or mixing shall be thoroughly rinsed with solvent rinsings as soon as possible after use, and the solvent rinsings shall be added to the composite sample for extraction and analysis.

(5) If pH is monitored continuously, the minimum and maximum pH values for each day shall be reported in monthly self-monitoring reports.

(6) In conducting the effluent sampling, visual observations shall be made. A log shall be kept of the effluent conditions. Attention shall be given to:

a. The presence or absence of floating or suspended material of waste origin, including oil, grease, algae, and other macroscopic particulate matter,

b. Odor: Presence or absence, characterization, source, distance of travel.

Notes on effluent conditions shall be summarized in the monitoring report.

## B. Monitoring Location – EFF-001A

1. The Discharger shall monitor effluent at EFF-001A as follows.

## Table E-5. Effluent Monitoring – Monitoring Location EFF-001A

| Parameter | Units | Minimum Sampling Frequency | | | Required Analytical Test Method |
|---|---|---|---|---|---|
| | | Continuous | 24-hour composite | Grab | |
| Flow[2] | MGD | Cont/D | | | meter |
| Temperature | °C | | | 3/Week | [1] |
| Dissolved Oxygen | mg/l | | | 3/Week | [1] |
| pH[3] | s.u. | | | 3/Week | [1] |
| Fecal Coliform Bacteria | MPN/100 ml | | | 2/Week | [1] |
| Enterococci Bacteria[4] | colonies/100 ml | | | Monthly | [1] |
| Acute Toxicity[5] | % survival | Cont/D | | | [1] |
| Chronic Toxicity[6] | TUc | | 2/Year | | [1] |
| Copper | µg/l | | Monthly | | [1] |
| Lead | µg/l | | Monthly | | [1] |
| Mercury[7] | µg/l, kg/mo | | | Monthly | [1] |
| Nickel | µg/l | | Monthly | | [1] |
| Dioxin-TEQ[8] | µg/l | | | 2/Year | [1] |
| Aldrin | µg/l | | | 2/Year | [1] |
| Alpha-BHC | µg/l | | | 2/Year | [1] |
| Beta-BHC | µg/l | | | 2/Year | [1] |
| 4,4-DDT | µg/l | | | 2/Year | [1] |
| 4,4-DDE | µg/l | | | 2/Year | [1] |
| Dieldrin | µg/l | | | 2/Year | [1] |
| Endrin | µg/l | | | 2/Year | [1] |
| Heptachlor | µg/l | | | 2/Year | [1] |
| Heptachlor Epoxide | µg/l | | | 2/Year | [1] |
| Ammonia | mg/l | | | Monthly | [1] |
| Tributyltin[9] | µg/l | | | 2/Year | [1] |
| CTR Priority Pollutants[10] | µg/l | 1/Year and in accordance with the August 6, 2001 Letter | | | [1] |
| Visual Observations[11] | | | | Daily | |

(1) Pollutants shall be analyzed using the analytical methods described in 40 CFR Part 136. For priority pollutants, the methods must meet the lowest minimum levels (MLs) specified in Attachment 4 of the SIP. Where no methods are specified for a given pollutant, the methods must be approved by this Regional Water Board or the State Board.

(2) Flows shall be monitored continuously and the following shall be reported in monthly self-monitoring reports:

a. Daily Average Flow (MGD)
b. Total Daily Flow Volume (MG)
c. Monthly Average Flow (MGD)
d. Monthly Total Flow Volume (MG)
e. Average daily maximum and average daily minimum flow rates (MGD) in each month.

(3) If pH is monitored continuously, the minimum and maximum pH values for each day shall be reported in monthly self-monitoring reports.

(4) The Discharger shall monitor for enterococci using USEPA's Membrane Filter Test Method 1600, or an EPA approved method such as Enterolert.

(5) Acute bioassay tests shall be performed in accordance with Section V.A of this MRP. A combination of prechlorinated effluent flows from EFF-001-SAN and EFF-001-IND is to be used for the test. The flows are to be mixed in proportion to the actual flow of the two plants.

(6) Critical Life Stage Toxicity Test shall be performed and reported in accordance with the Chronic Toxicity Requirements specified in Sections V.B of the MRP.

(7) Mercury: The Discharger may, at its option, sample effluent mercury either as grab or as 24-hour composite samples. The discharger shall use ultra-clean sampling (USEPA 1669) to the maximum extent practicable and ultra-clean analytical methods (USEPA 1631) for mercury monitoring. The Discharger may only use alternative methods if the method has an ML of 0.5 ng/l or less, and approval is obtained from the Executive Officer prior to conducting the monitoring.

(8) Dioxin-TEQ analyzed by USEPA Method 1613 using ½ USEPA specified MLs.

(9) To determine tributyltin, the Discharger shall use GC-FPD, GC/MS or an USEPA approved method; the method shall be capable of speciating organotins and detecting concentrations at low limits on the order of 5 ng/l. Alternative methods of analysis must be approved by the Executive Officer.

(10) Those pollutants identified as Compound Nos. 1 – 126 by the California Toxics Rule at 40 CFR 131.38 (b)(1).

(11) In conducting the effluent sampling, visual observations shall be made. A log shall be kept of the effluent conditions. Attention shall be given to:

a. The presence or absence of floating or suspended material of waste origin, including oil, grease, algae, and other macroscopic particulate matter,

b. Odor: Presence or absence, characterization, source, distance of travel.

Notes on effluent conditions shall be summarized in the monitoring report.

2. The Discharger may use the data generated in accordance with the monitoring requirements in Section IV.B.1 above to determine compliance with the water quality-based effluent limitations for the Industrial Plant.

## C. Monitoring Location – EFF-002

1. The Discharger shall monitor treated effluent from the facility at EFF-002 as follows:

### Table E-6. Effluent Monitoring – Monitoring Location EFF-002

| Parameter | Units | Minimum Sampling Frequency | | | Required Analytical Test Method |
|---|---|---|---|---|---|
| | | Continuous | 24-hour composite | Grab | |
| Chlorine, Total Residual | mg/l, kg/day | Or, by grab every 2 hours | | | (1) |
| Visual Observations(2) | | | | Daily | |
| Cyanide(3) | μg/l | | | Monthly | (1) |

(1) All disinfection process monitoring shall be conducted on the combined NBSU flow, as the dechlorination occurs on this particular flow. During all times when chlorination is used for disinfection of the effluent, effluent chlorine residual concentrations shall be monitored continuously, or by grab samples taken every 2 hours. Grab samples may be taken by hand or by automated means using in-line equipment such as three-way valves and chlorine residual analyzers. Chlorine residual concentrations shall be monitored and reported for sampling points both prior to and following dechlorination. Chlorine dosage (kg/day) shall be recorded on a daily basis and dechlorination chemical dosage and/or residual (if desired to demonstrate chlorine exceedances are false positives).

Total Residual Chlorine Detection Levels: Discharger shall use a method for analysis of TRC that is identified as approved by USEPA for analysis of wastewaters at 40 CFR Part 136. The method of analysis shall achieve a method detection limit (MDL) at least as low as that achieved by the Amperometric Titration Method (4500-Cl D from *Standard Methods for Examination of Water and Wastewater*, Edition 20).

(2) In conducting the effluent sampling, visual observations shall be made. A log shall be kept of the effluent conditions. Attention shall be given to:

a. The presence or absence of floating or suspended material of waste origin, including oil, grease, algae, and other macroscopic particulate matter,

b. Odor: Presence or absence, characterization, source, distance of travel.

Notes on effluent conditions shall be summarized in the monitoring report.

(3) The Discharger may analyze for cyanide as Weak Acid Dissociable Cyanide using protocols specified in Standard Methods Part 4500-CN-I, USEPA Method OI 1677, or an equivalent alternative as specified in the latest edition of Standard Methods for Analysis of Water and Wastewater. Alternative methods of analysis must be approved by the Executive Officer.

3. The Discharger may use the data generated in accordance with the monitoring requirements in Section IV.C.1 above to determine compliance with the water quality-based effluent limitations for the Industrial Plant.

## V. WHOLE EFFLUENT TOXICITY TESTING REQUIREMENTS

The Discharger shall monitor acute and chronic toxicity at EFF-001-SAN (prior to chlorination) as follows:

### A. Whole Effluent Acute Toxicity

1. Compliance with the acute toxicity effluent limitations of this Order shall be evaluated by measuring survival of test organisms exposed to 96-hour continuous flow-through bioassays.

2. Test organisms shall be the fathead minnow (*Pimephales promelas*) unless specified otherwise in writing by the Executive Officer.

3. All bioassays shall be performed according to the most up-to-date protocols in 40 CFR Part 136, currently in "Methods for Measuring the Acute Toxicity of Effluents and Receiving Water to Freshwater and Marine Organisms,"5$^{th}$ Edition.

4. The Discharger is authorized to adjust the effluent pH to below 6.6 in order to suppress the level of unionized (free) ammonia. This adjustment shall be achieved by continuously monitoring test tank pH and automatic addition of 1.0 normal hydrochloric acid as needed, using a combination of continuous pH-sensor/analyzer and pump. If other specific identifiable substances in the discharge can be demonstrated by the Discharger as being rapidly rendered harmless upon discharge to the receiving water, compliance with the acute toxicity limit may be determined after the test samples are adjusted to remove the influence of those substances. Written approval from the Executive Officer must be obtained to authorize such an adjustment.

5. Monitoring of the bioassay water shall include, on a daily basis, the following parameters: pH, dissolved oxygen, ammonia (if toxicity is observed), temperature, hardness, and alkalinity. These results shall be reported. If the fish survival rate in the effluent is less than 70 percent or if the control fish survival rate is less than 90 percent, the bioassay test shall be restarted with new batches of fish and shall continue back to back until compliance is demonstrated.

## B. Whole Effluent Chronic Toxicity

1. Chronic Toxicity Monitoring Requirements

   a. *Sampling*. The Discharger shall collect 24-hour composite samples of the effluent at the compliance point station specified in a table above, for critical life stage toxicity testing as indicated below. For toxicity tests requiring renewals, 24-hour composite samples collected on consecutive days are required.

   b. *Test Species*. *Strongylocentrotus purpuratus* and *Dendraster excentricus*. The Executive Officer may change to another test species if data suggest that another test species is more sensitive to the discharge.

   c. *Methodology*. Sample collection, handling and preservation shall be in accordance with USEPA protocols. In addition, bioassays shall be conducted in compliance with the most recently promulgated test methods, as shown in **Appendix E-1.** These are "Short-Term Methods for Estimating the Chronic Toxicity of Effluents and Receiving Waters to Marine and Estuarine Organisms," currently third edition (EPA-821-R-02-014), and "Short-term Methods for Estimating the Chronic Toxicity of Effluents and Receiving Waters to Freshwater Organisms," currently fourth Edition (EPA-821-R-02-013), with exceptions granted the Discharger by the Executive Officer and the Environmental Laboratory Accreditation Program (ELAP).

   d. *Dilution Series.* The Discharger shall conduct tests at 40%, 20%, 10%, 5%, and 2%. The "%" represents percent effluent as discharged. The Discharger may use a buffer only after obtaining written approval from the Executive Officer.

2. Chronic Toxicity Reporting Requirements

   a. *Routine Reporting*. Toxicity test results for the current reporting period shall include, at a minimum, for each test:

      (1) Sample date(s)

      (2) Test initiation date

      (3) Test species

      (4) End point values for each dilution (e.g., number of young, growth rate, percent survival)

      (5) NOEC value(s) in percent effluent

      (6) IC15, IC25, IC40, and IC50 values (or EC15, EC25 ... etc.) as percent effluent

(7) TUc values (100/NOEC, 100/IC25, or 100/EC25)

(8) Mean percent mortality (±s.d.) after 96 hours in 100% effluent (if applicable)

(9) NOEC and LOEC values for reference toxicant test(s)

(10) IC50 or EC50 value(s) for reference toxicant test(s)

(11) Available water quality measurements for each test (pH, D.O., temperature, conductivity, hardness, salinity, ammonia)

b. *Compliance Summary*. The results of the chronic toxicity testing shall be provided in the self-monitoring report and shall include a summary table of chronic toxicity data from at least eleven of the most recent samples. The information in the table shall include items listed above under 2.a, specifically item numbers (1), (3), (5), (6) (IC25 or EC25), (7), and (8).

3. Chronic Toxicity Reduction Evaluation (TRE)

a. *Prepare Generic TRE Work Plan.* To be ready to respond to toxicity events, the Discharger shall prepare a generic TRE work plan within 90 days of the effective date of this Order. The Discharger shall review and update the work plan as necessary to remain current and applicable to the discharge and discharge facilities.

b. *Submit Specific TRE Work Plan*. Within 30 days of exceeding either trigger for accelerated monitoring, the Discharge shall submit to the Regional Water Board a TRE work plan, which should be the generic work plan revised as appropriate for this toxicity event after consideration of available discharge data.

c. *Initiate TRE*. Within 30 days of the date of completion of the accelerated monitoring tests observed to exceed either trigger, the Discharger shall initiate a TRE in accordance with a TRE work plan that incorporates any and all comments from the Executive Officer.

d. The TRE shall be specific to the discharge and be prepared in accordance with current technical guidance and reference materials, including USEPA guidance materials. The TRE shall be conducted as a tiered evaluation process, such as summarized below:

i. Tier 1 consists of basic data collection (routine and accelerated monitoring).

ii. Tier 2 consists of evaluation of optimization of the treatment process, including operation practices and in-plant process chemicals.

iii. Tier 3 consists of a toxicity identification evaluation (TIE).

iv. Tier 4 consists of evaluation of options for additional effluent treatment processes.

v. Tier 5 consists of evaluation of options for modifications of in-plant treatment processes.

vi. Tier 6 consists of implementation of selected toxicity control measures, and follow-up monitoring and confirmation of implementation success.

e. The TRE may be ended at any stage if monitoring finds there is no longer consistent toxicity (complying with requirements of Section IV.B.3 of this Order).

f. The objective of the TIE shall be to identify the substance or combination of substances causing the observed toxicity. All reasonable efforts using currently available TIE methodologies shall be employed.

g. As toxic substances are identified or characterized, the Discharger shall continue the TRE by determining the source(s) and evaluating alternative strategies for reducing or eliminating the substances from the discharge. All reasonable steps shall be taken to reduce toxicity to levels consistent with chronic toxicity evaluation parameters.

h. Many recommended TRE elements parallel required or recommended efforts of source control, pollution prevention and storm water control programs. TRE efforts should be coordinated with such efforts. To prevent duplication of efforts, evidence of complying with requirements or recommended efforts of such programs may be acceptable to comply with TRE requirements.

i. The Regional Water Board recognizes that chronic toxicity may be episodic and identification of causes of and reduction of sources of chronic toxicity may not be successful in all cases. Consideration of enforcement action by the Regional Water Board will be based in part on the Discharger's actions and efforts to identify and control or reduce sources of consistent toxicity.

### C. Use of Monitoring Data

The discharger may use the data generated in accordance with the monitoring requirements in Sections V.A and V.B above to determine compliance with the water quality-based effluent limitations for the Industrial Plant.

## VI. LAND DISCHARGE MONITORING REQUIREMENTS

Not Applicable

## VII. RECLAMATION MONITORING REQUIREMENTS

Not Applicable

## VIII. RECEIVING WATER MONITORING REQUIREMENTS

### A. Regional Monitoring Program

1. The Discharger shall continue to participate in the Regional Monitoring Program, which involves collection of data on pollutants and toxicity in water, sediment and biota of the Estuary. The Discharger's participation and support of the RMP is used in consideration of the level of receiving water monitoring required by this Order.

2. With each annual self-monitoring report, the Discharger shall document how it complies with Receiving Water Limitations. This may include discharge characteristics (e.g. mass balance with effluent data and closest RMP station), receiving water data, or a combination of both.

## IX. LEGEND FOR MRP TABLES

Types of Samples

C-24 = composite sample, 24 hours
(includes continuous sampling, such as for flows)
C-X = composite sample, X hours
Grab = grab sample

Frequency of Sampling

Cont. = Continuous
Cont/D = Continuous monitoring & daily reporting
Q = once each calendar quarter (at about three month intervals)
2/week = twice a week
3/week = three times a week
2/month = twice a month
1/Y = once each calendar year
2/Y = twice each calendar year (at about 6 months intervals, once during dry season, once during wet season)

Parameter and Unit Abbreviations

BOD = Biochemical Oxygen Demand
D.O. = Dissolved Oxygen
Est V = Estimated Volume (gallons)
Metals = multiple metals; See SMP Section VI.G.
PAHs = Polycyclic Aromatic Hydrocarbons; See SMP Section VI.H.
TSS = Total Suspended Solids
MGD = million gallons per day
mg/l = milligrams per liter
ml/l-hr = milliliters per liter, per hour
µg/l = micrograms per liter
µmhos/cm = micromhos per centimeter
kg/d = kilograms per day
kg/mo = kilograms per month
MPN/100 ml = Most Probable Number per 100 milliliters

## X. OTHER MONITORING REQUIREMENTS

### A. Monitoring Location – Overflows and Bypasses (OV-1 thru OV-n)

1. The Discharger shall monitor bypasses and sewer overflows and report the estimated volume of each overflow or bypass event, the duration of the event, and the corrective action measures taken.

**Table E-7. Overflows and Bypasses Monitoring Requirements**

| Parameter | Units | Sample Type | Minimum Sampling Frequency | Required Analytical Test Method |
|---|---|---|---|---|
| Flow and Total Volume | MGD | Continuous | 1/Day | (1) |
| $CBOD_5$ | mg/l; kg/day | Grab | 1/Day | (1) |
| TSS | mg/l; kg/day | Grab | 1/Day | (1) |
| Enterococci Bacteria | Colonies/100ml | Grab | 1/Day | (1) |
| Fecal Coliform Bacteria | MPN/100 ml | Grab | 1/Day | (1) |
| Total Coliform | MPN/100 ml | Grab | 1/Day | (1) |
| Standard Observations | -- | Observation | Each Occurrence | -- |

(1) Pollutants shall be analyzed using the analytical methods described in 40 CFR Part 136.

### B. Sludge Monitoring

The Discharger shall adhere to sludge monitoring requirements required by 40 CFR Part 503.

## XI. REPORTING REQUIREMENTS

### A. General Monitoring and Reporting Requirements

1. The Discharger shall comply with all Standard Provisions (Attachment D) related to monitoring, reporting, and recordkeeping.

### B. Modifications to Part A of Self-Monitoring Program (Attachment G)

1. If any discrepancies exist between SMP Part A, August 1993 (**Attachment G**) and this MRP, this MRP prevails.

2. Sections C.3. and C.5 are satisfied by participation in the Regional Monitoring Program.

3. Modify Section F.4 as follows:

**Self-Monitoring Reports**

For each calendar month, a self-monitoring report (SMR) shall be submitted to the Regional Water Board in accordance with the requirements listed in Self-Monitoring Program, Part A. The purpose of the report is to document treatment performance, effluent quality and compliance with waste discharge requirements prescribed by this Order, as demonstrated by the monitoring program data and the Discharger's operation practices.

[And add at the end of Section F.4 the following:]

g. If the Discharger wishes to invalidate any measurement, the letter of transmittal will include a formal request to invalidate the measurement; the original measurement in question, the reason for invalidating the measurement, all relevant documentation that supports the invalidation (e.g., laboratory sheet, log entry, test results, etc.), and discussion of the corrective actions taken or planned (with a time schedule for completion), to prevent recurrence of the sampling or measurement problem. The invalidation of a measurement requires the approval of Water Board staff and will be based solely on the documentation submitted at that time.

h. Reporting Data in Electronic Format

The Discharger has the option to submit all monitoring results in an electronic reporting format approved by the Executive Officer. If the Discharger chooses to submit SMRs electronically, the following shall apply:

1) Reporting Method: The Discharger shall submit SMRs electronically via the process approved by the Executive Officer in a letter dated December 17, 1999, Official Implementation of Electronic Reporting System (ERS) and in the Progress Report letter dated December 17, 2000, or in a subsequently approved format that the Permit has been modified to include.

2) Monthly or Quarterly Reporting Requirements: For each reporting period (monthly or quarterly as specified in SMP Part B), an electronic SMR shall be submitted to the Regional Water Board in accordance with Section F.4.a-g. above. However, until USEPA approves the electronic signature or other signature technologies, Dischargers that are using the ERS must submit a hard copy of the original transmittal letter, an ERS printout of the data sheet, a violation report, and a receipt of the electronic transmittal.

3) Annual Reporting Requirements: Dischargers who have submitted data using the ERS for at least one calendar year are exempt from submitting an annual report electronically, but a hard copy of the annual report shall be submitted according to Section F.5 below.

## C. Self Monitoring Reports (SMRs)

1. At any time during the term of this Order, the State or Regional Water Board may notify the Discharger to electronically submit Self-Monitoring Reports (SMRs) using the State Water Board's California Integrated Water Quality System (CIWQS) Program Web site (http://www.waterboards.ca.gov/ciwqs/index.html). Until such notification is given, the Discharger shall submit hard copy SMRs. The CIWQS Web site will provide additional directions for SMR submittal in the event there will be service interruption for electronic submittal.

2. The Discharger shall submit monthly Self-Monitoring Reports including the results of all required monitoring using USEPA approved test methods or other test methods specified in this Order for each calendar month. Monthly SMRs shall be due on the 30th day following the end of each calendar month, covering samples collected during that calendar month; Annual Reports shall be due on February 1 following each calendar year.

3. Monitoring periods and reporting for all required monitoring shall be completed according to the following schedule:

**Table E-8. Monitoring Periods and Reporting Schedule**

| Sampling Frequency | Monitoring Period Begins On… | Monitoring Period |
|---|---|---|
| Continuous | Day after permit effective date | All |
| Hourly | Day after permit effective date | Hourly |
| 1/Day | Day after permit effective date | Midnight through 11:59 PM or any 24-hour period that reasonably represents a calendar day for purposes of sampling. |
| X/Week | Sunday following permit effective date or on permit effective date if on a Sunday | Sunday through Saturday |
| 1/Month | First day of calendar month following permit effective date or on permit effective date if that date is first day of the month | 1st day of calendar month through last day of calendar month |
| 1/Quarter | Closest of January 1, April 1, July 1, or October 1 following (or on) permit effective date | January 1 through March 31<br>April 1 through June 30<br>July 1 through September 30<br>October 1 through December 31 |
| 2/Year | Closest of January 1 or July 1 following (or on) permit effective date | January 1 through June 30<br>July 1 through December 31 |
| 1/Year | January 1 following (or on) permit effective date | January 1 through December 31 |
| Per Discharge Event | Anytime during the discharge event or as soon as possible after aware of the event | At a time when sampling can characterize the discharge event |

4. Reporting Protocols. The Discharger shall report with each sample result the applicable Reporting Level (RL) and the current Method Detection Limit (MDL), as determined by the procedure in 40 CFR Part 136.

   The Discharger shall report the results of analytical determinations for the presence of chemical constituents in a sample using the following reporting protocols:

   a. Sample results greater than or equal to the RL shall be reported as measured by the laboratory (i.e., the measured chemical concentration in the sample).

   b. Sample results less than the RL, but greater than or equal to the laboratory's MDL, shall be reported as "Detected, but Not Quantified," or DNQ. The estimated chemical concentration of the sample shall also be reported.

      For the purposes of data collection, the laboratory shall write the estimated chemical concentration next to DNQ as well as the words "Estimated Concentration" (may be shortened to "Est. Conc."). The laboratory may, if such information is available, include numerical estimates of the data quality for the reported result. Numerical estimates of data quality may be percent accuracy (± a percentage of the reported value), numerical ranges (low to high), or any other means considered appropriate by the laboratory.

   c. Sample results less than the laboratory's MDL shall be reported as "Not Detected," or ND.

   d. Dischargers are to instruct laboratories to establish calibration standards so that the ML value (or its equivalent if there is differential treatment of samples relative to calibration standards) is the lowest calibration standard. At no time is the Discharger to use analytical data derived from *extrapolation* beyond the lowest point of the calibration curve.

5. The Discharger shall submit SMRs in accordance with the following requirements:

   a. The Discharger shall arrange all reported data in a tabular format. The data shall be summarized to clearly illustrate whether the facility is operating in compliance with interim and/or final effluent limitations. The Discharger is not required to duplicate the submittal of data that is entered in a tabular format within CIWQS. When electronic submittal of data is required and CIWQS does not provide for entry into a tabular format within the system, the Discharger shall electronically submit the data in a tabular format as an attachment.

   b. The Discharger shall attach a cover letter to the SMR. The information contained in the cover letter shall clearly identify violations of the WDRs; discuss corrective actions taken or planned; and the proposed time schedule for corrective actions. Identified violations must include a description of the requirement that was violated and a description of the violation.

c. SMRs must be submitted to the Regional Water Board, signed and certified as required by the Standard Provisions (Attachment D), to the address listed below:

Attn: NPDES Wastewater Division
California Regional Water Quality Control Board
San Francisco Bay Region
1515 Clay Street, Suite 1400
Oakland, CA 94612

## D. Discharge Monitoring Reports (DMRs)

1. As described in Section X.B.1 above, at any time during the term of this Order, the State or Regional Water Board may notify the Discharger to electronically submit SMRs that will satisfy federal requirements for submittal of Discharge Monitoring Reports (DMRs). Until such notification is given, the Discharger shall submit DMRs in accordance with the requirements described below.

2. DMRs must be signed and certified as required by the standard provisions (Attachment D). The Discharge shall submit the original DMR and one copy of the DMR to the address listed below:

| Standard Mail | FedEx/UPS/Other Private Carriers |
|---|---|
| State Water Resources Control Board<br>Division of Water Quality<br>c/o DMR Processing Center<br>PO Box 100<br>Sacramento, CA 95812-1000 | State Water Resources Control Board<br>Division of Water Quality<br>c/o DMR Processing Center<br>1001 I Street, 15th Floor<br>Sacramento, CA 95814 |

3. All discharge monitoring results must be reported on the official USEPA pre-printed DMR forms (EPA Form 3320-1). Forms that are self-generated or modified cannot be accepted.

## E. Other Reports

. **Annual Reports.** By February 1st of each year, the Discharger shall submit an annual report to the Regional Water Board covering the previous calendar year. The report shall contain the items described in Standard Provisions and Reporting Requirements, and SMP Part A, August 1993 (**Attachment G**).

# APPENDIX E-1
# CHRONIC TOXICITY
# DEFINITION OF TERMS AND SCREENING PHASE REQUIREMENTS

## I. Definition of Terms

A. No observed effect level (NOEL) for compliance determination is equal to $IC_{25}$ or $EC_{25}$. If the $IC_{25}$ or $EC_{25}$ cannot be statistically determined, the NOEL shall be equal to the NOEC derived using hypothesis testing.

B. Effective concentration (EC) is a point estimate of the toxicant concentration that would cause an adverse effect on a quantal, "all or nothing," response (such as death, immobilization, or serious incapacitation) in a given percent of the test organisms. If the effect is death or immobility, the term lethal concentration (LC) may be used. EC values may be calculated using point estimation techniques such as probit, logit, and Spearman-Karber. $EC_{25}$ is the concentration of toxicant (in percent effluent) that causes a response in 25 percent of the test organisms.

C. Inhibition concentration (IC) is a point estimate of the toxicant concentration that would cause a given percent reduction in a nonlethal, nonquantal biological measurement, such as growth. For example, an $IC_{25}$ is the estimated concentration of toxicant that would cause a 25 percent reduction in average young per female or growth. IC values may be calculated using a linear interpolation method such as USEPA's Bootstrap Procedure.

D. No observed effect concentration (NOEC) is the highest tested concentration of an effluent or a toxicant at which no adverse effects are observed on the aquatic test organisms at a specific time of observation. It is determined using hypothesis testing.

## II. Chronic Toxicity Screening Phase Requirements

A. The Discharger shall perform screening phase monitoring:

1. Subsequent to any significant change in the nature of the effluent discharged through changes in sources or treatment, except those changes resulting from reductions in pollutant concentrations attributable to source control efforts, or

2. Prior to permit reissuance. Screening phase monitoring data shall be included in the NPDES permit application for reissuance. The information shall be as recent as possible, but may be based on screening phase monitoring conducted within 5 years before the permit expiration date.

B. Design of the screening phase shall, at a minimum, consist of the following elements:

1. Use of test species specified in **Appendix E-2**, attached, and use of the protocols referenced in those tables, or as approved by the Executive Officer.

2. Two stages:

a. Stage 1 shall consist of a minimum of one battery of tests conducted concurrently. Selection of the type of test species and minimum number of tests shall be based on **Appendix E-2** (attached).

b. Stage 2 shall consist of a minimum of two test batteries conducted at a monthly frequency using the three most sensitive species based on the Stage 1 test results and as approved by the Executive Officer.

3. Appropriate controls.

4. Concurrent reference toxicant tests.

5. Dilution series 100%, 50%, 25%, 10%, 5%, 0 %, where "%" is percent effluent as discharged, or as otherwise approved the Executive Officer.

C. The Discharger shall submit a screening phase proposal acceptable to the Executive Officer. The proposal shall address each of the elements listed above. If within 30 days, the Executive Officer does not comment, the Discharge shall commence with screening phase monitoring.

# APPENDIX E-2
# SUMMARY OF TOXICITY TEST SPECIES REQUIREMENTS

## Critical Life Stage Toxicity Tests for Estuarine Waters

| Species | (Scientific Name) | Effect | Test Duration | Reference |
|---|---|---|---|---|
| Alga | *(Skeletonema costatum)* *(Thalassiosira pseudonana)* | Growth rate | 4 days | 1 |
| Red alga | *(Champia parvula)* | Number of cystocarps | 7–9 days | 3 |
| Giant kelp | *(Macrocystis pyrifera)* | Percent germination; germ tube length | 48 hours | 2 |
| Abalone | *(Haliotis rufescens)* | Abnormal shell development | 48 hours | 2 |
| Oyster<br>Mussel | *(Crassostrea gigas)*<br>*(Mytilus edulis)* | Abnormal shell development; percent survival | 48 hours | 2 |
| Echinoderms -<br>Urchins<br>Sand dollar | *(Strongylocentrotus purpuratus, S. franciscanus)*<br>*(Dendraster excentricus)* | Percent fertilization | 1 hour | 2 |
| Shrimp | *(Mysidopsis bahia)* | Percent survival; growth | 7 days | 3 |
| Shrimp | *(Holmesimysis costata)* | Percent survival; growth | 7 days | 2 |
| Topsmelt | *(Atherinops affinis)* | Percent survival; growth | 7 days | 2 |
| Silversides | *(Menidia beryllina)* | Larval growth rate; percent survival | 7 days | 3 |

**Toxicity Test References:**

1. American Society for Testing Materials (ASTM). 1990. Standard Guide for Conducting Static 96-Hour Toxicity Tests with Microalgae. Procedure E 1218-90. ASTM, Philadelphia, PA.
2. Short-term Methods for Estimating the Chronic Toxicity of Effluent and Receiving Waters to West Coast Marine and Estuarine Organisms. EPA/600/R-95/136. August 1995.
3. Short-term Methods for Estimating the Chronic Toxicity of Effluent and Receiving Waters to Marine and Estuarine Organisms. EPA/600/4-90/003. July 1994.

## Critical Life Stage Toxicity Tests for Fresh Waters

| Species | (Scientific Name) | Effect | Test Duration | Reference |
|---|---|---|---|---|
| Fathead minnow | *(Pimephales promelas)* | Survival; growth rate | 7 days | 4 |
| Water flea | *(Ceriodaphnia dubia)* | Survival; number of young | 7 days | 4 |
| Alga | *(Selenastrum capricornutum)* | Cell division rate | 4 days | 4 |

**Toxicity Test Reference:**

4. Short-term Methods for Estimating the Chronic Toxicity of Effluents and Receiving Waters to Freshwater Organisms, third edition. EPA/600/4-91/002. July 1994.

## Toxicity Test Requirements for Stage One Screening Phase

| Requirements | Receiving Water Characteristics | | |
|---|---|---|---|
| | Discharges to Coast | Discharges to San Francisco Bay[2] | |
| | Ocean | Marine/Estuarine | Freshwater |
| Taxonomic diversity | 1 plant<br>1 invertebrate<br>1 fish | 1 plant<br>1 invertebrate<br>1 fish | 1 plant<br>1 invertebrate<br>1 fish |
| Number of tests of each salinity type: Freshwater[1]<br>Marine/Estuarine | 0<br>4 | 1 or 2<br>3 or 4 | 3<br>0 |
| Total number of tests | 4 | 5 | 3 |

[1] The freshwater species may be substituted with marine species if:

(a) The salinity of the effluent is above 1 part per thousand (ppt) greater than 95 percent of the time, or

(b) The ionic strength (TDS or conductivity) of the effluent at the test concentration used to determine compliance is documented to be toxic to the test species.

[2] (a) Marine/Estuarine refers to receiving water salinities greater than 1 ppt at least 95 percent of the time during a normal water year.

(b) Fresh refers to receiving water with salinities less than 1 ppt at least 95 percent of the time during a normal water year.

## ATTACHMENT F – FACT SHEET

### Table of Contents

I. Permit Information ..... 3
II. Facility Description ..... 4
A. Description of Wastewater Treatment or Controls ..... 4
B. Storm Water ..... 5
D. Summary of Existing Requirements and Self-Monitoring Report (SMR) Data ..... 6
E. Compliance Summary ..... 7
F. Planned Changes ..... 8
III. Applicable Plans, Policies, and Regulations ..... 9
A. Legal Authorities ..... 9
B. California Environmental Quality Act (CEQA) ..... 9
C. State and Federal Regulations, Policies, and Plans ..... 9
D. Impaired Water Bodies on CWA 303(d) List ..... 13
E. Other Plans, Polices and Regulations ..... 14
IV. Rationale For Effluent Limitations and Discharge Specifications ..... 14
A. Discharge Prohibitions ..... 15
B. Technology-Based Effluent Limitations ..... 16
1. Scope and Authority ..... 16
2. Applicable Technology-Based Effluent Limitations ..... 16
3. Bacteria ..... 17
C. Water Quality-Based Effluent Limitations ..... 18
1. Scope and Authority ..... 18
2. Applicable Beneficial Uses and Water Quality Criteria and Objectives ..... 18
3. Determining the Need for Water Quality Based Effluent Limits (WQBELs) ..... 21
4. Water Quality Based Effluent Limitation (WQBEL) Calculations ..... 30
5. Anti-Backsliding/Antidegradation ..... 43
6. Whole Effluent Acute Toxicity ..... 44
7. Whole Effluent Chronic Toxicity ..... 45
8. Chlorine ..... 46
D. Interim Effluent Limitations and Compliance Schedules ..... 46
1. Feasibility Evaluation ..... 46
E. Summary of Final Effluent Limitations ..... 50
F. Land Discharge Specifications ..... 51
G. Reclamation Specifications ..... 51
V. Rationale for Receiving Water Limitations ..... 51
A. Surface Water ..... 51
B. Groundwater ..... 52
VI. Rationale For Monitoring And Reporting Requirements ..... 52
A. Influent Monitoring ..... 52
B. Effluent Monitoring ..... 52
C. Whole Effluent Toxicity Testing Requirements ..... 54
D. Receiving Water Monitoring ..... 54
1. Regional Monitoring Program ..... 54
E. Other Monitoring Requirements ..... 54

VII. Rationale for Provisions ..... 55
A. Standard Provisions (Provision VI.A) ..... 55
B. Monitoring and Reporting Requirements (Provision VI.B) ..... 55
C. Special Provisions (Provision VI.C) ..... 55
1. Reopener Provisions ..... 55
2. Special Studies and Additional Monitoring Requirements ..... 55
3. Best Management Practices and Pollution Minimization Program ..... 56
4. Requirement to Assure Compliance Schedules with Final Limits ..... 56
5. Construction, Operation, and Maintenance Specifications ..... 56
6. Special Provisions for Municipal Facilities (POTWs Only) ..... 57
7. Other Special Provisions ..... 57
VIII. Public Participation ..... 57
A. Notification of Interested Parties ..... 58
B. Written Comments ..... 58
C. Public Hearing ..... 58
D. Waste Discharge Requirements Petitions ..... 58
E. Information and Copying ..... 59
F. Register of Interested Persons ..... 59
G. Additional Information ..... 59

## List of Tables

Table F-1. Facility Information ..... 3
Table F-2. Outfall Location ..... 6
Table F-3. Historic Effluent Limitations and Monitoring Data ..... 6
Table F-4. Historic Effluent Limitations and Monitoring Data for Toxic Pollutants ..... 7
Table F-5: Summary of Effluent Violations ..... 8
Table F-6. Status of Special Activities in Provisions for Order No. 01-145 ..... 8
Table F-7. Basin Plan Beneficial Uses ..... 9
Table F-8. Secondary Treatment Requirements (1) ..... 16
Table F-9. Summary of Technology-Based Effluent Limitations ..... 16
Table F-10. Summary of Reasonable Potential Determination for the Sanitary Plant ..... 24
Table F-11. Summary of Reasonable Potential Determination for the – Industrial Plant ..... 27
Table F-12 Constituents with Reasonable Potential. ..... 30
Table F-13 Summary of Water Quality Criteria or Objectives for Constituents with Reasonable Potential. ..... 31
Table F-14 Summary of WQBELs for Constituents with Reasonable Potential ..... 38
Table F-15. Calculation of WQBELs ..... 39
Table F-16. Newly Calculated Limits versus Previous Limits ..... 43
Table F-17 Feasibility to Comply ..... 48
Table F-18. Summary of Effluent Limitations ..... 50

## ATTACHMENT F – FACT SHEET

As described in Section II of this Order, this Fact Sheet includes the legal requirements and technical rationale that serve as the basis for the requirements of this Order.

This Order has been prepared under a standardized format to accommodate a broad range of discharge requirements for dischargers in California. Only those sections or subsections of this Order that are specifically identified as "not applicable" have been determined not to apply to this Discharger. Sections or subsections of this Order not specifically identified as "not applicable" are fully applicable to this Discharger.

### I. PERMIT INFORMATION

The following table summarizes administrative information related to the facility.

**Table F-1. Facility Information**

| | |
|---|---|
| **WDID** | 2 417032001 |
| **Dischargers** | City and County of San Francisco, North Bayside System Unit |
| **Name of Facilities** | San Francisco International Airport, Mel Leong Treatment Plant, Sanitary Plant |
| **Facility Address** | 676 McDonnell Road, San Francisco, CA 94128 |
| | San Mateo County |
| **Facility Contact, Title, Phone** | Mark Costanzo, Utility Manager, (650) 821-7809 |
| **Authorized Person to Sign and Submit Reports** | Ernie Eavis, Deputy Airport Director, (650) 821-7747 |
| **Mailing Address** | P.O. Box 8097, San Francisco, CA 94128 |
| **Billing Address** | Same as Mailing Address |
| **Type of Facility** | Publicly Owned Treatment Works |
| **Major or Minor Facility** | Major |
| **Threat to Water Quality** | 1 |
| **Complexity** | A |
| **Pretreatment Program** | No |
| **Reclamation Requirements** | Producer |
| **Facility Permitted Flow** | 2.2 million gallons per day (MGD) |
| **Facility Design Flow** | 2.2 MGD (current dry weather average design flow) |
| **Watershed** | San Francisco Bay |
| **Receiving Water** | Lower San Francisco Bay |
| **Receiving Water Type** | Marine |

**A.** The City and County of San Francisco is the owner and operator of the San Francisco International Airport, Mel Leong Treatment Plant, Sanitary Plant.

For the purposes of this Order, references to the "discharger" or "permittee" in applicable federal and state laws, regulations, plans, or policy are held to be equivalent to references to the Discharger herein.

**B.** The facility discharges treated wastewater into the deep-water channel of Lower San Francisco Bay, a water of the United States, and is currently regulated by Order No. 01-145 and NPDES Permit No. CA0038318, adopted on November 28, 2001.

The terms and conditions of the current Order have been automatically continued past the Order's original expiration date of November 28, 2006 and remain in effect until new Waste Discharge Requirements and NPDES permit are adopted pursuant to this Order.

**C.** The Discharger filed a Report of Waste Discharge and submitted an application for renewal of its Waste Discharge Requirements and NPDES permit on August 28, 2006. Supplemental application information was requested by the Regional Water Board on November 6, 2006 and submitted by the Discharger on November 8 and 9, 2006.

## II. FACILITY DESCRIPTION

### A. Description of Wastewater Treatment or Controls

The Discharger owns and operates the San Francisco International Airport (SFIA) Mel Leong Treatment Plant. The Plant consists of a Sanitary Plant and an Industrial Plant. The Sanitary Plant consists of a secondary wastewater treatment plant and its collection and conveyance system. The Sanitary Plant treats sanitary wastewater from airplanes and facilities such as terminal restrooms, hangars, restaurants, and shops at the airport. The Industrial Plant treats first flush storm water collected from the SFIA as well as other wastewaters generated throughout the SFIA (e.g., maintenance shops, car washing). As necessary, either plant may occasionally be used to store or treat flows, spills or overflows from the other as necessary to assure that both treatment plants are operated efficiently and that such flows are captured and treated before they reach receiving waters.

Sanitary wastewaters from facilities throughout the SFIA are collected and conveyed to the Sanitary Plant though a system that consists of over 20 miles of sewer piping, eight lift stations, and 16 pump stations. Wastewater treatment processes at the Sanitary Plant consists of screening using punched plate bar screens, grit removal, flow equalization, biological treatment using sequential batch reactors (SBRs), and effluent flow equalization and chlorination. Sludge is treated by gravity belt thickening, anaerobic digestion and then dewatered by belt filter presses or air dried using sludge drying beds. Final sludge cake and air-dried sludge is disposed via landfill (currently Ox Mountain Sanitary Landfill).

After chlorination, treated wastewater is directed to a pumping station where it is combined with treated effluent from the Industrial Plant, and then discharged to the North Bayside System Unit (NBSU) South San Francisco/San Bruno Water Quality Control Plant. The NBSU is operated by a joint powers authority of the same name and is responsible for operation of certain shared transport, treatment, and disposal facilities. NBSU member organizations include Millbrae, Burlingame, South San Francisco, San Bruno, and SFIA. The plant is located at 195 Belle Air Road, South San Francisco, CA 94080. The plant manger is currently David Castagnola who may be contacted at 650 829 3844.

Dechlorination takes place in the NBSU outfall before the combined effluent is discharged. Effluent from the NBSU force main discharges into the Lower San Francisco Bay, a water

of the State and United States, northeast of Point San Bruno through a submerged diffuser approximately 5,300 feet offshore at a depth of 20 feet below mean lower low water (latitude 37°, 39', 55" North and longitude 122°, 21', 41" West).

According to the permit application, in 2005 the Sanitary Plant discharged an average daily flow of 0.8 MGD; the highest recorded daily flow was 1.3 MGD. The dry weather design flow for the facility is 2.2 MGD.

Approximately 100,000 gallons per day of treated wastewater is stored in pressurized tanks and used for appropriate in-plant purposes. The reclaimed water is used year-round on an as-needed basis.

For purposes of this Order, two Discharge Points are defined for effluent from the Sanitary Plant. Discharge Points 001 and 002. Discharge Point 001 represents treated effluent from the Mel Leong Sanitary Treatment Plant.. As described further in the Monitoring and Reporting Program (Attachment E), two different monitoring locations have been established for Discharge Point 001. Monitoring Location EFF-001-San is used to collect samples from the Sanitary Plant. The treated waste water then combines with the treated waste water from the Industrial Plant and samples of the combined flow collected at monitoring location EFF-001A. Samples from this location represents the total wastewater discharge from the Mel Leong Treatment Plant prior to discharge into the NBSU.. Samples are also collected from Discharge Point 002 which is a point in the NBSU after dechlorination.

For purposes of this Order, two discharge points are authorized for effluent from the Sanitary Plant. Discharge Point No. 001 represents treated effluent as it is discharged into the NBSU. As described further in the Monitoring and Reporting Program (Attachment E), two different monitoring locations have been established for Discharge Point 001. Monitoring Location EFF-001-San represents treated effluent from the Sanitary Plant prior to discharge into the main outfall pumping station and combination with effluent from the Industrial Plant. Monitoring Location EFF-001A represents the total wastewater discharge from the Sanitary and Industrial Plants prior to discharge into the NBSU. Discharge Point 002 represents a point in the NBSU after dechlorination.

## B. Storm Water

1. *Regulation.* Federal Regulations for storm water discharges were promulgated by the USEPA on November 19, 1990. The regulations [40 CFR Parts 122, 123, and 124] require specific categories of industrial activity to obtain an NPDES permit and to implement Best Available Technology Economically Available (BAT) and Best Conventional Pollutant Control Technology (BCT) to control pollutants in industrial storm water discharges.

2. *Exemption from Coverage under Statewide Industrial Storm Water General Permit.* The State Water Board adopted a statewide NPDES permit for storm water discharges associated with industrial activities (NPDES General Permit CAS000001). Storm water from the site captured within the SFIA storm drain system is directed to the headworks of the Industrial Plant.

## C. Discharge Points and Receiving Waters

The location of the NBSU outfall and its receiving water are shown in Table F-2 below.

**Table F-2. Outfall Location**

| Discharge Point | Effluent Description | Discharge Point Latitude | Discharge Point Longitude | Receiving Water |
|---|---|---|---|---|
| 002 | Treated Sanitary Wastewater | 37 º, 39 ’, 55 ” N | 122 º, 21 ’, 41 ” W | Lower San Francisco Bay, via Discharge through the North Bayside System Unit |

Lower San Francisco Bay is located in the South Bay Basin watershed management area, between the Dumbarton Bridge and the San Francisco-Oakland Bay Bridge.

## D. Summary of Existing Requirements and Self-Monitoring Report (SMR) Data

Effluent limitations contained in the previous Order (Order No. 01-145) for discharges to the NBSU and Lower San Francisco Bay and representative monitoring data from the term of the previous Order are as follows:

**Table F-3. Historic Effluent Limitations and Monitoring Data**

| Parameter | (units) | Effluent Limitations | | | Monitoring Data (From 1/02 To 7/06 ) | | |
|---|---|---|---|---|---|---|---|
| | | Monthly Average | Weekly Average | Daily Maximum | Highest Monthly Average | Highest Weekly Average | Highest Daily Discharge |
| Carbonaceous Biochemical Oxygen Demand (5-day @ 20°C) ($CBOD_5$) | mg/l | 25 | 40 | 50 | 17 | 20 | 24 |
| $CBOD_5$ | % Removal | 85 | -- | -- | 95(7) | NA | NA |
| Total Suspended Solids (TSS) | mg/l | 30 | 45 | 60 | 23 | 32 | 34 |
| TSS | % Removal | 85 | -- | -- | 92(7) | NA | NA |
| Oil and Grease | mg/l | 10 | -- | 20 | 11 | NA | 11 |
| Settleable Matter | ml/l-hr | 0.1 | -- | 0.2 | 0 | NA | 0 |
| Total Chlorine Residual (TRC) | mg/l | -- | -- | (1) | NR | NR | NR |
| pH | s.u. | (2) | (2) | (2) | 6.4 - 8.15 | | |
| Fecal Coliform Bacteria | MPN/100 ml | -- | (3) | (4) | NA | 78 | 225 |
| Acute Toxicity | % Survival | (5) | (5) | (5) | 85(8) | 30(9) | 15 |
| Chronic Toxicity | TUc | (6) | (6) | (6) | NA | NA | 10(10) |

ND = Non-Detect

NR = Not Reported

NA = Not Applicable

(1) For TRC, 0.0 mg/l was established as an instantaneous maximum effluent limitation.

(2) The pH shall not exceed 9.0 nor be less than 6.0.

(3) The 5-day log mean fecal coliform density shall not exceed 200 MPN/100 ml.

(4) The 90th percentile value of the last ten values shall not exceed 400 MPN/100 ml.

(5) An 11-sample median value of not less than 90 percent survival and an 11-sample 90th percentile value of not less than 70 percent survival.

(6) A chronic toxicity effluent limit was not included in Order No. 01-145. An accelerated monitoring trigger was included after exceeding a three sample median value of 10 chronic toxicity (TUc) or a single sample maximum of 20 TUc or greater.

(7) Represents the lowest reported percent removal.

(8) Represents the highest 11 sample median.

(9) Represents the highest 11-sample 90th percentile value.

(10) This value represents the highest result of data submitted for the period March 2003 through March 2006.

### Table F-4. Historic Effluent Limitations and Monitoring Data for Toxic Pollutants

| Parameter | Units | Water Quality-Based Effluent Limitations (WQBELs) | | Interim Limitations | | Monitoring Data (From 1/02 To 7/06) |
|---|---|---|---|---|---|---|
| | | Daily Maximum | Monthly Average | Daily Average | Monthly Average | Highest Daily Discharge |
| ***Priority Pollutants*** | | | | | | |
| Copper | µg/l | -- | -- | 33 | -- | 13.95 |
| Mercury | µg/l | -- | -- | 1 | 0.087 | 0.0867 |
| Mercury | kg/month | -- | -- | -- | 0.018 | 0.0021(1) |
| Cyanide | µg/l | -- | -- | 10 | -- | 15.8 |
| Zinc | µg/l | 580 | 480 | -- | -- | 71.4 |
| Dieldrin | µg/l | 0.00028 | 0.00014 | -- | -- | 0.014(2) |
| 4,4-DDE | µg/l | 0.0012 | 0.00059 | -- | -- | 0.05 |
| 4,4-DDD | µg/l | -- | -- | 0.10 | -- | ND |
| Alpha-BHC | µg/l | -- | -- | 0.078 | -- | ND |
| Beta-BHC | µg/l | -- | -- | 0.085 | -- | 0.13 |
| Bis (2-ethylhexyl) Phthalate | µg/l | -- | -- | 15.2 | -- | 0.69 |
| ***Other Non-Conventional Pollutants*** | | | | | | |
| Tributlytin | µg/l | 0.37 | 0.13 | -- | -- | 0.019 |

(1) Represents the highest 12-month average.

(2) Value reported as detected but not quantified (DNQ).

## E. Compliance Summary

1. **Compliance with Numeric Effluent Limitations.** From 2001 through 2006, the Discharger violated effluent limitations contained in Order No. 01-145 on eight occasions, as shown in Table F-5 below:

**Table F-5: Summary of Effluent Violations**

| Date of Violation | Effluent Limitation Described | Effluent Limit | Reported Value |
|---|---|---|---|
| 12/3/2001 | Cyanide, Daily Maximum | 10 µg/l | 16.528 µg/l |
| 8/5/2002 | Cyanide, Daily Maximum | 10 µg/l | 12 µg/l |
| 12/9/2002 | Cyanide, Daily Maximum | 10 µg/l | 12 µg/l |
| 1/6/2003 | Cyanide, Daily Maximum | 10 µg/l | 12 µg/l |
| 9/8/2003 | Acute Toxicity, 11-Sample Median Value | 90% Survival | 85% Survival |
| 9/30/2003 | Oil and Grease, Monthly Average | 10 mg/l | 11 mg/l |
| 8/1/2005 | Cyanide, Daily Maximum | 10 µg/l | 16 µg/l |
| 9/27/2005 | Acute Toxicity, 11-Sample 90$^{th}$ Percentile Value | 70% Survival | 30% Survival |

Enforcement Order R2-2002-0075 imposed Mandatory Minimum Penalties for violations incurred up until March 31, 2002. Enforcement actions for subsequent violations are pending.

2. **Compliance with Permit Provisions.** A list of special activities required in the provisions for Order No. 01-145, and the status of completion, is shown in the table below:

**Table F-6. Status of Special Activities in Provisions for Order No. 01-145**

| Provision No. | Description of Activity | Status of Completion |
|---|---|---|
| E-2 | Mercury Source Control and Mass Loading Reduction Study and Schedule | Required only if a violation of the mercury mass emission rate occurs. All self-monitoring report data indicates compliance with the mass emission rate. |
| E-3 | Cyanide Study and Schedule for Site-Specific Objective | Completed |
| E-4 | Pollutant Prevention and Minimization Program (PMP) | Completed |
| E-7 | Effluent Characterization – Final Report | Completed |
| E-8 | Ambient Background Receiving Water Study | Completed |
| E-15 | Annual Status Reports | Completed |
| E-16 | TMDL/SSO Development Update | Completed |

## F. Planned Changes

Not Applicable

## III. APPLICABLE PLANS, POLICIES, AND REGULATIONS

The requirements contained in the proposed Order are based on the requirements and authorities described in this section.

### A. Legal Authorities

This Order is issued pursuant to CWA section 402 and implementing regulations adopted by the USEPA and Chapter 5.5, Division 7 of the California Water Code (CWC) (commencing with section 13370). It shall serve as an NPDES permit for point source discharges from this facility to surface waters. This Order also serves as WDRs pursuant to CWC Article 4, Chapter 4, Division 7 (commencing with section 13260).

### B. California Environmental Quality Act (CEQA)

Under CWC section 13389, this action to adopt an NPDES permit is exempt from the provisions of CEQA.

### C. State and Federal Regulations, Policies, and Plans

1. **Water Quality Control Plans.** The Regional Water Board adopted a *Water Quality Control Plan for the San Francisco Bay Basin*, (revised in 2005*)* (hereinafter the Basin Plan) that designates beneficial uses, establishes water quality objectives, and contains implementation programs and policies to achieve those objectives for all waters addressed through the plan. In addition, the Basin Plan implements State Water Board Resolution No. 88-63, which establishes State policy that all waters, with certain exceptions, should be considered suitable or potentially suitable for municipal or domestic supply (MUN). Because of the marine influence on receiving waters of the San Francisco Bay, total dissolved solids levels in the Bay commonly (and often significantly) exceed 3,000 mg/l and thereby meet an exception to State Water Board Resolution No. 88-63. Therefore, the designation MUN will not be applicable to Lower San Francisco Bay. Beneficial uses applicable to Lower San Francisco Bay are as follows:

**Table F-7. Basin Plan Beneficial Uses**

| Discharge Point | Receiving Water Name | Beneficial Use(s) |
|---|---|---|
| 002 | Lower San Francisco Bay | Industrial Service Supply (IND)<br>Navigation (NAV)<br>Water Contact Recreation (REC1)<br>Non-Contact Water Recreation (REC2)<br>Ocean Commercial and Sport Fishing (COMM)<br>Wildlife Habitat (WILD)<br>Preservation of Rare and Endangered Species (RARE)<br>Fish Migration (MIGR)<br>Shellfish Harvesting (SHELL)<br>Estuarine Habitat (EST) |

Requirements of this Order implement the Basin Plan.

2. **Thermal Plan.** The State Water Board adopted a *Water Quality Control Plan for Control of Temperature in the Coastal and Interstate Water and Enclosed Bays and Estuaries of California* (Thermal Plan) on May 18, 1972, and amended this plan on September 18, 1975. This plan contains water quality objectives (WQOs) for coastal and interstate surface waters as well as enclosed bays and estuaries. Requirements of this Order implement the Thermal Plan.

3. **National Toxics Rule (NTR) and California Toxics Rule (CTR).** USEPA adopted the NTR on December 22, 1992, which was amended on May 4, 1995, and November 9, 1999. About 40 criteria in the NTR applied in California. On May 18, 2000, USEPA adopted the CTR. The CTR promulgated new toxics criteria for California and, in addition, incorporated the previously adopted NTR criteria that were applicable in the state. The CTR was amended on February 13, 2001. These rules contain water quality criteria for priority pollutants.

4. **State Implementation Policy.** On March 2, 2000, State Water Board adopted the *Policy for Implementation of Toxics Standards for Inland Surface Waters, Enclosed Bays, and Estuaries of California* (State Implementation Policy or SIP*).* The SIP became effective on April 28, 2000, with respect to the priority pollutant criteria promulgated for California by the USEPA through the NTR and to the priority pollutant objectives established by the Regional Water Board in the Basin Plan. The SIP became effective on May 18, 2000 with respect to the priority pollutant criteria promulgated by the USEPA through the CTR. The State Water Board adopted amendments to the SIP on February 24, 2005 that became effective on July 13, 2005. The SIP establishes implementation provisions for priority pollutant criteria and objectives and provisions for chronic toxicity control. Requirements of this Order implement the SIP.

5. **Compliance Schedules and Interim Requirements.** Section 2.1 of the SIP provides that, based on a Discharger's request and demonstration that it is infeasible for an existing Discharger to achieve immediate compliance with an effluent limitation derived from a CTR criterion, compliance schedules may be allowed in an NPDES permit. Unless an exception has been granted under section 5.3 of the SIP, a compliance schedule may not exceed 5 years from the date that the permit is issued or reissued, nor may it extend beyond 10 years from the effective date of the SIP (or May 18, 2010). Where a compliance schedule for a final effluent limitation exceeds one year, a permit must include interim numeric limitations for that constituent or parameter. Where allowed by the Basin Plan, compliance schedules and interim effluent limitations or discharge specifications may also be granted to allow time to implement a new or revised water quality objective. This Order includes compliance schedules and interim effluent limitations.

6. **Alaska Rule.** On March 30, 2000, USEPA revised its regulation that specifies when new and revised state and tribal water quality standards (WQS) become effective for

CWA purposes [40 CFR §131.21, 65 Fed. Reg. 24641 (April 27, 2000)]. Under the revised regulation (also known as the Alaska Rule), new and revised standards submitted to USEPA after May 30, 2000, must be approved by USEPA before being used for CWA purposes. The final rule also provides that standards already in effect and submitted to USEPA by May 30, 2000, may be used for CWA purposes, whether or not approved by USEPA.

7. **Stringency of Requirements for Individual Pollutants.** This Order contains restrictions on individual pollutants that are no more stringent than required by the federal CWA. Individual pollutant restrictions consist of technology-based restrictions and water quality-based effluent limitations. The technology-based effluent limitations consist of restrictions on carbonaceous biochemical oxygen demand ($CBOD_5$), total suspended solids (TSS), pH, settable matter, oil and grease, and chlorine residual. Water quality-based effluent limitations have been scientifically derived to implement water quality objectives that protect beneficial uses. Both the beneficial uses and the water quality objectives have been approved pursuant to federal law and are the applicable federal water quality standards. To the extent that toxic pollutant water quality-based effluent limitations were derived from the CTR, the CTR is the applicable standard pursuant to section 131.38. The scientific procedures for calculating the individual water quality-based effluent limitations are based on the CTR-SIP, which was approved by USEPA on May 18, 2000. All beneficial uses and water quality objectives contained in the Basin Plan were approved under state law and submitted to and approved by USEPA prior to May 30, 2000. Any water quality objectives and beneficial uses submitted to USEPA prior to May 30, 2000, but not approved by USEPA before that date, are nonetheless "applicable water quality standards for purposes of the CWA" pursuant to section 131.21(c)(1). Collectively, this Order's restrictions on individual pollutants are no more stringent than required to implement the technology-based requirements of the CWA and the applicable water quality standards for purposes of the CWA.

8. **Antidegradation Policy.** NPDES regulations at 40 CFR 131.12 required that State water quality standards include an antidegradation policy consistent with the Federal policy. The State Water Board established California's antidegradation policy in State Water Board Resolution 68-16, which incorporates the requirements of the Federal antidegradation policy. Resolution 68-16 requires that existing water quality is maintained unless degradation is justified based on specific findings.

   The permitted discharge is consistent with the antidegradation provision of 40 CFR §131.12 and State Water Board Resolution 68-16, and the final limitations in this Order are in compliance with antidegradation requirements and meet the requirements of the SIP because these limits hold the Discharger to performance levels that will not cause or contribute to water quality impairment or further quality degradation that could result from an increase in permitted design flow or a reduction in the level of treatment. This Order does not provide for an increase in the permitted design flow or allow for a reduction in the level of treatment.

For copper, alpha-BHC and beta-BHC, the effluent limits are higher than those in the previous permit, but these limits apply to a different compliance point that is after combination with effluent from the industrial treatment plant. Effluent at this new compliance point is different than effluent at the compliance point in the previous permit; therefore, the limits are not directly comparable. The previous interim limits for these pollutants were based on very limited data and reflected conditions prior to the major plant upgrade that occurred since the last permit was issued. The revised limits for copper, alpha-BHC and beta-BHC will not degrade water quality because the permitted flow will remain unchanged and the level of treatment provided by the plant will not be reduced.

In the case of copper, alternate limits based on site-specific objectives will be higher than the current interim limit if the site-specific objectives for copper become effective during the permit term. However, the standards setting process for copper addressed antidegradation and therefore an analysis in this permit is unnecessary. As such there will be no lowering of water quality beyond the current level authorized in the previous permit, which is the baseline by which to measure whether degradation will occur. Moreover, this Order requires implementation of action plans for copper if and when the alternate limits become effective. This measure will maintain existing water quality.

For cyanide, the effluent limits are higher than those in the previous permit, but these limits apply to a different compliance point at the NBSU joint outfall. Effluent at this new compliance point is different than effluent at the compliance point in the previous permit; therefore, the limits are not directly comparable. The revised limits will not degrade water quality because the permitted flow will remain unchanged and the level of treatment provided by the plant will not be reduced. The new limits are equivalent to those anticipated in the antidegradation analysis section of the Staff Report supporting the cyanide site-specific objectives. That analysis concluded that these new limits would not likely result in degradation and that any increase would not have a measurable impact on ambient cyanide levels in the Bay. Since the limits anticipated with the site-specific objectives would not degrade the quality of the receiving water, neither will the increased limits in this permit. As such there will be no lowering of water quality beyond the current level authorized in the previous permit, which is the baseline by which to measure whether degradation will occur. Moreover, this Order requires implementation of action plans for cyanide source identification and pollution prevention. These measures will further ensure that existing water quality is maintained or improved.

The Order continues the status quo with respect to the level of discharge authorized in the previous permit and thus there will be no change in water quality beyond the level that was authorized in the last permit. Findings authorizing degradation are thus unecessary.

9. **Anti-Backsliding Requirements.** CWA Sections 402(o)(2) and 303(d)(4) and NPDES regulations at 40 CFR 122.44(l) prohibit backsliding in NPDES permits. These anti-backsliding provisions require that effluent limitations in a reissued permit

must be as stringent as those in the previous Order, with some exceptions in which limitations may be relaxed. All effluent limitations in this Order are at least as stringent as the effluent limitations in the previous Order.

## D. Impaired Water Bodies on CWA 303(d) List

On June 6, 2003, the USEPA approved a revised list of impaired water bodies prepared by the State (hereinafter referred to as the 303(d) list), prepared pursuant to provisions of CWA section 303(d), which requires identification of specific water bodies where it is expected that water quality standards will not be met after implementation of technology-based effluent limitations on point sources. Lower San Francisco Bay is listed as an impaired water body. The pollutants impairing Lower San Francisco Bay include chlordane, DDT, diazinon, dieldrin, dioxin compounds, exotic species, furan compounds, mercury, nickel, PCBs, and dioxin-like PCBs. South San Francisco Bay is also listed as an impaired waterbody for all the same pollutants impairing Lower San Francisco Bay and selenium. The SIP requires final effluent limitations for all 303(d)-listed pollutants to be consistent with total maximum daily loads (TMDLs) and associated waste load allocations.

### 1. Total Maximum Daily Loads

The Regional Water Board plans to adopt TMDLs for pollutants on the 303(d) list in Lower San Francisco Bay within the next 10 years. Future review of the 303(d) list for Lower San Francisco Bay may provide schedules or result in revision of the schedules for adoption of TMDLs.

### 2. Waste Load Allocations

The TMDLs will establish waste load allocations (WLAs) for point sources and load allocations (LAs) for non-point sources, and will result in achieving the water quality standards for the water bodies. Final water quality-based effluent limitations (WQBELs) for 303(d) listed pollutants in this discharge will be based on WLAs contained in the respective TMDLs.

### 3. Implementation Strategy

The Regional Water Board's strategy to collect water quality data and to develop TMDLs is summarized below:

a. **Data Collection.** The Regional Water Board has given dischargers to the Bay the option to collectively assist in developing and implementing analytical techniques capable of detecting 303(d)-listed pollutants to at least their respective levels of concern or water quality objectives (WQOs)/water quality criteria (WQC). This collective effort may include development of sample concentration techniques for approval by the USEPA. The Regional Water Board will require dischargers to characterize the pollutant loads from their facilities into the water-quality limited water bodies. The results will be used in the development of TMDLs, and may be used to update or revise the 303(d) list

or change the WQOs/WQC for the impaired water bodies including Lower San Francisco Bay.

b. **Funding Mechanism.** The Regional Water Board has received, and anticipates continuing to receive, resources from federal and State agencies for TMDL development. To ensure timely development of TMDLs, the Regional Water Board intends to supplement these resources by allocating development costs among dischargers through the Regional Monitoring Program or other appropriate funding mechanisms.

### E. Other Plans, Polices and Regulations

This Order is also based on the following plans, polices, and regulations:

1. The Federal *Water Pollution Control Act*, Sections 301 through 305, and 307, and amendments thereto, as applicable (CWA);

2. The State Water Board's March 2, 2000 *Policy for* the USEPA's May 18, 2000 *Water Quality Standards; Establishment of Numeric Criteria for Priority Toxic Pollutants for the State of California* or CTR, 40 CFR §131.38(b) and amendments.

3. The USEPA's *Quality Criteria for Water* [EPA 440/5-86-001, 1986] and subsequent amendments (the USEPA Gold Book);

4, Applicable Federal Regulations [40 CFR §§122 and 131];

5. 40 CFR §131.36(b) and amendments [Federal Register Volume 60, Number 86, 4 May 1995, pages 22229-22237];

6. USEPA's December 10, 1998 National Recommended Water Quality Criteria compilation [Federal Register Vol. 63, No. 237, pp. 68354-68364];

7. USEPA's December 27, 2002 Revision of National Recommended Water Quality Criteria compilation [Federal Register Vol. 67, No. 249, pp. 79091-79095]; and

8. Guidance provided with State Water Board Orders remanding permits to the Regional Water Board for further consideration.

## IV. RATIONALE FOR EFFLUENT LIMITATIONS AND DISCHARGE SPECIFICATIONS

The CWA requires point source dischargers to control the amount of conventional, non-conventional, and toxic pollutants that are discharged into the waters of the United States. The control of pollutants discharged is established through effluent limitations and other requirements in NPDES permits. There are two principal bases for effluent limitations in the NPDES regulations: 40 CFR 122.44(a) requires that permits include applicable technology-based limitations and standards; and 40 CFR 122.44(d) requires that permits include water quality-based effluent limitations (WQBELs) to attain and maintain applicable numeric and narrative water quality criteria to protect the beneficial uses of the receiving

water. Where reasonable potential has been established for a pollutant, but there is no numeric criterion or objective for the pollutant, WQBELs may be established: (1) using USEPA criteria guidance under CWA section 304(a), supplemented where necessary by other relevant information; (2) on an indicator parameter for the pollutant of concern; or (3) using a calculated numeric water quality criterion, such as a proposed state criterion or policy interpreting the state's narrative criterion, supplemented with other relevant information, as provided in 40 CFR 122.44(d)(1)(vi).

Several specific factors affecting the development of limitations and requirements in this Order are discussed as follows:

**A. Discharge Prohibitions**

1. **Discharge Prohibition III.A. (no discharge other than that described in this Order):** This prohibition is the same as in the previous permit. This prohibition is based on California Water Code section 13260, which requires filing a Report of Waste Discharge before discharges can occur. Discharges not described in the Report of Waste Discharge, and subsequently in the Order, are prohibited.

2. **Discharge Prohibition III.B. (no discharges receiving less than 10:1 dilution):** This prohibition is the same as the previous permit and is based on Discharge Prohibition No. 1 from Table 4-1 of the Basin Plan, which prohibits discharges that do not receive a minimum 10:1 initial dilution. Furthermore, this Order allows a 10:1 dilution credit in the calculation of some water quality based effluent limitations, and these limitations would not be protective of water quality if the discharge did not actually achieve a 10:1 minimum initial dilution.

3. **Discharge Prohibition III.C. (no bypasses except under the conditions at 40 CFR 122.41(m)(4)(i)(A), (B) and (C)):** This prohibition is based on 40 CFR 122.41(m)(4).

4. **Discharge Prohibition III.D. (average dry weather flow not to exceed dry weather design capacity):** This prohibition is based on the historic and tested reliable treatment capacity of the treatment plant. Exceeding this design average dry weather flow capacity may result in lowering the reliability of achieving compliance with water quality requirements.

5. **Discharge Prohibition III.E. (no sanitary sewer overflows (SSO) to waters of the United States)**: Discharge Prohibition No. 15 from Table 4-1 of the Basin Plan and the Clean Water Act prohibit the discharge of wastewater to surface waters except as authorized under an NPDES permit. POTWs must achieve secondary treatment, at a minimum, and any more stringent limitations that are necessary to achieve water quality standards [33 U.S.C. §1311(b)(1)(B) and (C)]. Thus, an SSO that results in the discharge of raw sewage, or sewage not receiving secondary treatment, to surface waters is prohibited under the Clean Water Act and the Basin Plan.

## B. Technology-Based Effluent Limitations

### 1. Scope and Authority

CWA section 301 (b)(1)(B) requires USEPA to develop secondary treatment standards for publicly owned wastewater treatment facilities (POTWs) – defined as the level of effluent quality attainable through the application of secondary or equivalent treatment. USEPA promulgated such technology-based effluent guidelines for POTWs at 40 CFR Part 133. These Secondary Treatment regulations include the following minimum requirements.

**Table F-8. Secondary Treatment Requirements [1]**

| Constituent | 30-Day Average | 7-Day Average |
|---|---|---|
| Biochemical Oxygen Demand (5-day @ 20°C) ($BOD_5$) | 30 mg/l | 45 mg/l |
| Carbonaceous Biochemical Oxygen Demand (5-day @ 20°C) ($CBOD_5$) [2] | 25 mg/l | 40 mg/l |
| Total Suspended Solids (TSS) | 30 mg/l | 45 mg/l |
| pH | 6.0 – 9.0 | 6.0 – 9.0 |

[1] In addition to the numeric effluent limitations for $BOD_5$, $CBOD_5$, and TSS, the 30-day average percent removal shall not be less than 85 percent.

[2] At the option of the permitting authority, effluent limitations for $CBOD_5$ may be substituted for limitations for $BOD_5$.

### 2. Applicable Technology-Based Effluent Limitations

The Order is retaining the following technology based effluent limitations, applicable to Discharge Point 001, from Order No. 01-145.

**Table F-9. Summary of Technology-Based Effluent Limitations**

| Parameter | Units | Effluent Limitations | | | | |
|---|---|---|---|---|---|---|
| | | Average Monthly | Average Weekly | Maximum Daily | Instantaneous Minimum | Instantaneous Maximum |
| $CBOD_5$ | mg/l | 25 | 40 | -- | -- | -- |
| TSS | mg/l | 30 | 45 | -- | -- | -- |
| Oil and Grease | mg/l | 10 | -- | 20 | -- | -- |
| pH | s.u. | -- | -- | -- | 6.0 | 9.0 |

The limitations established for oil and grease are levels attainable by secondary treatment and are required by the Basin Plan (Table 4-2) for all discharges to inland surface waters and enclosed bays and estuaries of the Region.

The pH limitation is retained from the previous Order and is required by USEPA's Secondary Treatment Regulation at 40 CFR Part 133 and by the Basin Plan (Table 4-2) for deep water discharges.

The technology-based effluent limitations for settleable matter are not retained from Order No. 01-145, as the Regional Water Board has determined that compliance with the Secondary Treatment Regulation at 40 CFR Part 133 and with the Basin Plan (Table 4-2) requirements for all discharges to inland surface waters and enclosed bays and estuaries of the Region will assure removal of settleable solids to acceptably low levels – below 0.1 ml/l/hr (30-day average) and 0.2 ml/l/hr (daily maximum).

The maximum daily effluent limitations for $CBOD_5$ and TSS are not retained from the previous Order. 40 CFR 122.45(d)(2) specifies that discharge limitations for POTWs shall be stated as average weekly effluent limitations and average monthly effluent limitations, unless impracticable.

**3. Bacteria**

The Basin Plan, Table 4.2, establishes effluent limitations for total coliform bacteria for all discharges from sewage treatment facilities to inland surface waters and enclosed bays and estuaries of the Region. Fecal coliform limitations may be substituted for the limitations of the Basin Plan "provided it can be conclusively demonstrated through a program approved by the Regional Water Board that such substitution will not result in unacceptable adverse impacts on the beneficial uses of the receiving water." Following receiving water impact monitoring studies conducted since 1992, the Regional Water Board amended the Discharger's NPDES permit with Order No. 98-117.

Order No. 98-117 amended Waste Discharge Requirements for permittees discharging treated effluent through the NBSU, to allow fecal coliform limitations to be substituted for total coliform limitations. The finding relied on previous studies, including the City of San Mateo and SBSA's 1997 fecal coliform studies that showed no relationship between dischargers' effluent fecal coliform concentrations and the shoreline concentrations. No impact from these two outfalls on the south Foster City shellfish harvesting beds was found. The San Mateo outfall is ¾ mile from the shellfish harvesting beds and the SBSA outfall is approximately two miles away. Since the NBSU outfall is 6.5 miles from the shellfish harvesting beds so it is even less likely to impact shellfish harvesting. Order No. 98-117 identified that there is, however, water contact recreation (board surfing) in the vicinity of the NBSU outfall, and thus effluent limits are set to meet water contact recreation objectives. These are a 5-day geometric mean fecal coliform effluent limitation of 200 MPN/100ml and a 90th percentile fecal coliform effluent limitation of 400 MPN/100ml.

Enterococci bacteria are more closely associated with gastrointestinal disease than fecal coliform bacteria for water contact. Pursuant to the BEACH Act of 2000, USEPA has promulgated enterococci bacteria criteria for water contact recreation in coastal waters that apply to this discharge. The limit for enterococci bacteria established by this Order (geometric mean not to exceed 35 colonies per 100 milliliters) is based on water quality criteria established by the USEPA at 40 CFR 131.41 for coastal recreation waters, including coastal estuaries, in California.

These water quality criteria became effective on December 16, 2004. [69 Fed Reg. 67218 (November 16, 2004)].

Although USEPA also established single sample maximum criteria for enterococci bacteria, this Order implements only the geometric mean criterion of 35 colonies per 100 milliliters as an effluent limitation. When these water quality criteria were promulgated, USEPA expected that the single sample maximum values would be used for making beach notification and beach closure decisions. "Other than in the beach notification and closure decision context, the geometric mean is the more relevant value for assuring that appropriate actions are taken to protect and improve water quality because it is a more reliable measure, being less subject to random variation …." [69 Fed Reg. 67224 (November 16, 2004)]

## C. Water Quality-Based Effluent Limitations

### 1. Scope and Authority

**a.** NPDES regulations at 40 CFR 122.44(d)(1)(i) require permits to include WQBELs for pollutants (including toxicity) that are or may be discharged at levels that cause, have reasonable potential to cause, or contribute to an excursion above any state water quality standard (Reasonable Potential). The process for determining Reasonable Potential and calculating WQBELs, when necessary, is intended to protect the designated uses of the receiving water as specified in the Basin Plan, and achieve applicable water quality objectives and criteria that are contained in the CTR, NTR, Basin Plan, other State plans and policies.

**b.** NPDES regulations and the SIP provide the basis to establish maximum daily effluent limitations (MDELs).

**1) NPDES Regulations.** NPDES regulations at 40 CFR 122.45(d) state: "For continuous discharges all permit effluent limitations, standards, and prohibitions, including those necessary to achieve water quality standards, shall *unless impracticable* be stated as maximum daily and average monthly discharge limitations for all discharges other than publicly owned treatment works."

**2) SIP.** The SIP (page 8, Section 1.4) requires WQBELs be expressed as MDELs and average monthly effluent limitations (AMELs).

**c.** MDELs are used in this Order to protect against acute water quality effects. The MDELs are necessary for preventing fish kills or mortality to aquatic organisms.

### 2. Applicable Beneficial Uses and Water Quality Criteria and Objectives

The WQOs and WQC applicable to the receiving waters for this discharge are from the Basin Plan; the CTR, established by USEPA at 40 CFR 131.38; and the NTR, established by USEPA at 40 CFR 131.36. Some pollutants have WQC/WQOs established by more than one of these three sources.

a. **Basin Plan.** The Basin Plan specifies numeric WQOs for 10 priority toxic pollutants, as well as narrative WQOs for toxicity and bioaccumulation in order to protect beneficial uses. The pollutants for which the Basin Plan specifies numeric objectives are arsenic, cadmium, chromium (VI), copper in freshwater, lead, mercury, nickel, silver, zinc, and cyanide. The narrative toxicity objective states in part that "[a]ll waters shall be maintained free of toxic substances in concentrations that are lethal to or that produce other detrimental responses in aquatic organisms." The bioaccumulation objective states in part that "[c]ontrollable water quality factors shall not cause a detrimental increase in concentrations of toxic substances found in bottom sediments or aquatic life. Effects on aquatic organisms, wildlife, and human health will be considered." Effluent limitations and provisions contained in this Order are designed, based on available information, to implement these objectives.

b. **CTR.** The CTR specifies numeric aquatic life criteria for 23 priority toxic pollutants and numeric human health criteria for 57 priority toxic pollutants. These criteria apply to all inland surface waters and enclosed bays and estuaries of the San Francisco Bay Region, although Tables 3-3 and 3-4 of the Basin Plan include numeric objectives for certain of these priority toxic pollutants, which supersede criteria of the CTR (except in the South Bay south of the Dumbarton Bridge).

c. **NTR.** The NTR establishes numeric aquatic life criteria for selenium, numeric aquatic life and human health criteria for cyanide, and numeric human health criteria for 34 toxic organic pollutants for waters of San Francisco Bay upstream to, and including Suisun Bay and the Delta. These criteria of the NTR are applicable to Lower San Francisco Bay, the receiving water for this Discharger.

d. **Technical Support Document for Water Quality-Based Toxics Controls.** Where numeric objectives have not been established or updated in the Basin Plan, NPDES regulations at 40 CFR 122.44 (d) require that WQBELs be established based on USEPA criteria, supplemented where necessary by other relevant information, to attain and maintain narrative WQOs to fully protect designated beneficial uses.

   To determine the need for and establish WQBELs, when necessary, the Regional Water Board staff has followed the requirements of applicable NPDES regulations, including 40 CFR Parts 122 and 131, as well as guidance and requirements established by the Basin Plan; USEPA's *Technical Support Document for Water Quality-Based Toxics Control* (the TSD, EPA/505/2-90-001, 1991); and the State Water Board's *Policy for Implementation of Toxics Standards for Inland Surface Waters, Enclosed Bays, and Estuaries of California* (the SIP, 2005).

e. **Basin Plan Receiving Water Salinity Policy.** The Basin Plan (like the CTR and the NTR) states that the salinity characteristics (i.e., freshwater vs. saltwater) of the receiving water shall be considered in determining the applicable WQC.

Freshwater criteria shall apply to discharges to waters with salinities equal to or less than 1 part per thousand (ppt) at least 95 percent of the time. Saltwater criteria shall apply to discharges to waters with salinities equal to or greater than 10 ppt at least 95 percent of the time in a normal water year. For discharges to water with salinities in between these two categories, or tidally influenced freshwaters that support estuarine beneficial uses, the criteria shall be the lower of the salt or freshwater criteria (the latter calculated based on ambient hardness) for each substance.

The receiving water for this discharger, Lower San Francisco Bay, is a salt water environment based on salinity data generated through the San Francisco Estuary Institute's Regional Monitoring Program (RMP) at the Redwood Creek (BA40) and San Bruno Shoal (BB15) sampling stations between 1993 and 2001. In that period, the receiving water's minimum salinity was 11 ppt, its maximum salinity was 31 ppt, and its average salinity was 23 ppt. As salinity was greater than 10 ppt in 100 percent of receiving water samples, the saltwater criteria from the Basin Plan, NTR, and CTR are applicable to this discharge.

f. **Site-Specific Metals Translators.** Because NPDES regulations at 40 CFR 122.45 (c) require effluent limitations for metals to be expressed as total recoverable metal, and applicable water quality criteria for the metals are typically expressed as dissolved metal, factors or translators must be used to convert metals concentrations from dissolved to total recoverable and vice versa. In the CTR, USEPA establishes default translators which are used in NPDES permitting activities; however, site-specific conditions such as water temperature, pH, suspended solids, and organic carbon greatly impact the form of metal (dissolved, filterable, or otherwise) which is present and therefore available in the water to cause toxicity. In general, the dissolved form of metals is more available and more toxic to aquatic life than filterable forms. Site-specific translators can be developed to account for site-specific conditions, thereby preventing exceedingly stringent or under protective WQOs.

For deep water discharges to Lower San Francisco Bay, the Regional Water Board staff are using the following translators for copper and nickel, based on recommendations of the Clean Estuary Partnership's *North of Dumbarton Bridge Copper and Nickel Development and Selection of Final Translators* (2005). In determining the need for and calculating WQBELs for all other metals, the Regional Water Board staff has used default translators established by the USEPA in the CTR at 40 CFR 131.38 (b)(2), Table 2.

| Copper and Nickel Translators for Deepwater Discharges to Lower San Francisco Bay | Copper | | Nickel | |
|---|---|---|---|---|
| | Chronic Criteria | Acute Criteria | Chronic Criteria | Acute Criteria |
| | 0.74 | 0.88 | 0.65 | 0.85 |

#### g. Interim Limitations and Compliance Schedules

The SIP and the Basin Plan authorize compliance schedules in a permit if an existing Discharger cannot immediately comply with a new and more stringent effluent limitation. Compliance schedules for limitations derived from CTR WQC are based on Section 2.2 of the SIP, and compliance schedules for limitations derived from the Basin Plan WQOs are based on the Basin Plan. Both the SIP and the Basin Plan require the Discharger to demonstrate the infeasibility of achieving immediate compliance with the new limitation to qualify for a compliance schedule.

### 3. Determining the Need for Water Quality Based Effluent Limits (WQBELs)

NPDES regulations at 40 CFR 122.44(d)(1)(i) require permits to include WQBELs for all pollutants (non-priority or priority) "which the Director determines are or may be discharged at a level which will cause, have the reasonable potential to cause, or contribute to an excursion above any narrative or numeric criteria within a State water quality standard" (have Reasonable Potential). Thus, assessing whether a pollutant has Reasonable Potential is the fundamental step in determining whether or not a WQBEL is required. For non-priority pollutants, Regional Water Board staff used available monitoring data, receiving water's designated uses, and/or previous permit pollutant limitations to determine Reasonable Potential. For priority pollutants, Regional Water Board staff used the methods prescribed in Section 1.3 of the SIP to determine if the discharge from the Sanitary Plant demonstrates Reasonable Potential.

#### a. Reasonable Potential Analysis

Using the methods prescribed in Section 1.3 of the SIP, Regional Water Board staff analyzed the effluent data to determine if the discharge from the Sanitary Plant demonstrates Reasonable Potential. The Reasonable Potential Analysis (RPA) compares the effluent data with numeric and narrative Water Quality Objectives (WQOs) in the Basin Plan and numeric Water Quality Criteria (WQC) from the USEPA, the NTR, and the CTR. The Basin Plan objectives and CTR criteria are shown in the Appendices of this Fact Sheet.

As described in the Facility Description, the treated wastewater from the Sanitary Plant is directed to a pumping station where it is combined with treated effluent from the Industrial Plant and then discharged to the NBSU. Either plant may occasionally be used to store or treat flows, spills or overflows from the other to assure that both treatment plants are operated efficiently and that such flows are captured and treated before they can reach receiving waters via the NBSU. Although final effluent flows are combined prior to discharge to the NBSU, the Sanitary Plant and the Industrial Plant are regulated under separate permits to ensure that each plant, independently, is properly operated and maintained by the Discharger.

Although the plants operate under separate permits, whenever possible compliance with WQBELs will be determined from samples collected at one combined discharge monitoring point. This contrasts the previous operations, which had separate compliance monitoring points for each plant. With only one monitoring point, there will be thus one set of WQBELs. This is a reasonable approach since it is the combined discharge that would more closely represent the discharge's effects in the receiving water. This one set of WQBELs covers all the pollutants that showed Reasonable Potential at either plant.

**b. Reasonable Potential Methodology**

Using the methods and procedures prescribed in Section 1.3 of the SIP, Regional Water Board staff analyzed the effluent and background data and the nature of facility operations to determine if the discharge has reasonable potential to cause or contribute to exceedances of applicable site-specific objectives (SSOs) or WQC. Appendix A of this Fact Sheet shows the stepwise process described in Section 1.3 of the SIP.

The RPA requires the identification of a maximum effluent concentration (MEC) for each pollutant based on existing data, while accounting for a limited data set and effluent variability. There are three triggers in determining Reasonable Potential:

**1)** The first trigger is activated if the MEC is greater than the lowest applicable WQO (MEC $\geq$ WQC), which has been adjusted, if appropriate, for pH, hardness, and translator data. If the MEC is greater than the adjusted WQC, then that pollutant has Reasonable Potential, and a WQBEL is required.

**2)** The second trigger is activated if the observed maximum ambient background concentration (B) is greater than the adjusted WQO (B > WQC), and the pollutant is detected in any of the effluent samples.

**3)** The third trigger is activated if a review of other information determines that a WQBEL is required to protect beneficial uses, even though both MEC and B are less than the WQC. A limitation may be required under certain circumstances to protect beneficial uses.

**c. Effluent Data**

The Regional Water Board's August 6, 2001 letter titled *Requirement for Monitoring of Pollutants in Effluent and Receiving Water to Implement New Statewide Regulations and Policy* (hereinafter referred to as the Regional Water Board's August 6, 2001 Letter - available online; see Standard Language and Other References Available Online, below) to all permittees formally required the Discharger (pursuant to Section 13267 of the CWC) to initiate or continue to monitor for the priority pollutants using analytical methods that provide the best detection limits reasonably feasible. Regional Water Board staff analyzed this effluent data and the nature of the Sanitary Plant to determine if the discharge

has Reasonable Potential. The analysis was based on the effluent monitoring data collected by the Discharger during the previous permit term (January 2002 through July 2006) for most inorganic constituents (arsenic, cadmium, chromium, copper, lead, mercury, nickel, selenium, silver, zinc, and cyanide). For the remaining inorganic constituents (antimony, beryllium, and thallium), monitoring data was available from March 2004 through March 2006. For most of the organic constituents (CTR numbers 16–126), monitoring data from September 2002 through March 2006 was used.

**d. Ambient Background Data**

Ambient background values are used in the analysis for the calculation of effluent limitations. Ambient background concentrations are the observed detected water column concentrations. The SIP states that for calculating WQBELs, ambient background concentrations are either the observed maximum ambient water column concentrations or, for criteria/objectives intended to protect human health from carcinogenic effects, the arithmetic mean of observed ambient water concentrations. The Regional Monitoring Program (RMP) station at Yerba Buena Island, located in the Central Bay, has been monitored for most of the inorganic (CTR constituent numbers 1–15) and some of the organic (CTR constituent numbers 16–126) toxic pollutants, and these data were used as background data in performing the RPA for this Discharger. For ammonia, which is a non-persistent pollutant, data from the Oyster Point RMP station were used.

Not all the constituents listed in the CTR have been analyzed by the RMP. These data gaps are addressed by the Regional Water Board's August 6, 2001 Letter that formally requires Dischargers (pursuant to Section 13267 of the CWC) to conduct ambient background monitoring and effluent monitoring for those constituents not currently monitored by the RMP and to provide this technical information to the Regional Water Board.

On May 15, 2003, a group of several San Francisco Bay Region Dischargers (known as the Bay Area Clean Water Agencies, or BACWA) submitted a collaborative receiving water study, entitled the *San Francisco Bay Ambient Water Monitoring Interim Report*. This study includes monitoring results from sampling events in 2002 and 2003 for the remaining priority pollutants not monitored by the RMP. The RPA was conducted and the WQBELs were calculated using RMP data from 1993 through 2003 for inorganics and organics at the Yerba Buena Island RMP station, and additional data from the BACWA *Ambient Water Monitoring: Final CTR Sampling Update Report* for the Yerba Buena Island RMP station.

**e. Reasonable Potential Determination for the Sanitary Plant**

The Maximum Effluent Concentrations (MECs), the most stringent applicable WQOs/WQC, and background concentrations used in the RPA are presented in the following table, along with the RP determination (Yes or No) for each

pollutant analyzed. Reasonable Potential was not found for all pollutants, since not all pollutants have applicable WQOs/WQC and for others monitoring data were not available. The details of the RPA for the Sanitary Plant are included in Appendix B of this Fact Sheet and are summarized in Table F-10. The pollutants from the Sanitary Plant that exhibit Reasonable Potential are copper, mercury, nickel, cyanide, aldrin, beta-BHC, 4,4-DDT, 4,4-DDE, dieldrin, endrin, heptachlor, heptachlor epoxide, ammonia and tributyltin.

**Table F-10. Summary of Reasonable Potential Determination for the Sanitary Plant**

| CTR # | Priority Pollutants | MEC or Minimum DL [(1)(2)] (µg/l) | Governing WQO/WQC (µg/l) | Maximum Background or Minimum DL [(1)(2)] (µg/l) | RP Determination[(3)] |
|---|---|---|---|---|---|
| 1 | Antimony | 0.41 | 4300 | 1.8 | No |
| 2 | Arsenic | 5 | 36 | 2.46 | No |
| 3 | Beryllium | <0.5 | No Criteria | 0.215 | Ud |
| 4 | Cadmium | 0.58 | 9.4 | 0.13 | No |
| 5a | Chromium (III) | Not Available | No Criteria | Not Available | Ud |
| 5b | Chromium (VI) | 6.77 | 50 | 4.4 | No |
| 6 | Copper | 13.95 | 4.2 | 2.45 | **Yes** |
| 7 | Lead | 5 | 8.5 | 0.80 | No |
| 8 | Mercury (303d listed) | 0.0867 | 0.025 | 0.0086 | **Yes** |
| 9 | Nickel | 14.91 | 12.6 | 3.7 | **Yes** |
| 10 | Selenium (303d listed) | 1.563 | 5 | 0.39 | No |
| 11 | Silver | 0.6 | 2.2 | 0.052 | No |
| 12 | Thallium | 1.3 | 6.3 | 0.21 | No |
| 13 | Zinc | 71.4 | 86 | 5.1 | No |
| 14 | Cyanide | 8.5 | 1.0 | < 0.4 | **Yes** |
| 15 | Asbestos | Not Available | No Criteria | Not Available | Ud |
| 16 | 2,3,7,8-TCDD (303d listed) | <9.80E-07 | 1.4E-08 | Not Available | No |
| | Dioxin-TEQ (303d listed) | <0.000000355 | 1.4E-08[(4)] | 7.10E-08 | No |
| 17 | Acrolein | <5 | 780 | < 0.5 | No |
| 18 | Acrylonitrile | <5 | 0.66 | 0.03 | No |
| 19 | Benzene | <0.5 | 71 | < 0.05 | No |
| 20 | Bromoform | 0.6 | 360 | < 0.5 | No |
| 21 | Carbon Tetrachloride | <0.5 | 4.4 | 0.06 | No |
| 22 | Chlorobenzene | <0.5 | 21000 | < 0.5 | No |
| 23 | Chlorodibromomethane | 1 | 34 | < 0.05 | No |
| 24 | Chloroethane | 0.075 | No Criteria | < 0.5 | Ud |
| 25 | 2-Chloroethylvinyl ether | <0.5 | No Criteria | < 0.5 | Ud |
| 26 | Chloroform | 11 | No Criteria | < 0.5 | Ud |
| 27 | Dichlorobromomethane | 5 | 46 | < 0.05 | No |
| 28 | 1,1-Dichloroethane | <0.5 | No Criteria | < 0.05 | Ud |
| 29 | 1,2-Dichloroethane | <0.5 | 99 | 0.04 | No |
| 30 | 1,1-Dichloroethylene | <0.5 | 3.2 | < 0.5 | No |
| 31 | 1,2-Dichloropropane | <0.5 | 39 | < 0.05 | No |
| 32 | 1,3-Dichloropropylene | <0.5 | 1700 | Not Available | No |
| 33 | Ethylbenzene | <0.5 | 29000 | < 0.5 | No |
| 34 | Methyl Bromide | 0.59 | 4000 | < 0.5 | No |
| 35 | Methyl Chloride | <0.5 | No Criteria | < 0.5 | Ud |
| 36 | Methylene Chloride | 0.485 | 1600 | 0.5 | No |
| 37 | 1,1,2,2-Tetrachloroethane | <0.5 | 11 | < 0.05 | No |
| 38 | Tetrachloroethylene | <0.5 | 8.85 | < 0.05 | No |

| CTR # | Priority Pollutants | MEC or Minimum DL (1)(2) (µg/l) | Governing WQO/WQC (µg/l) | Maximum Background or Minimum DL (1)(2) (µg/l) | RP Determination(3) |
|---|---|---|---|---|---|
| 39 | Toluene | 0.46 | 200000 | < 0.3 | No |
| 40 | 1,2-Trans-Dichloroethylene | <0.5 | 140000 | < 0.5 | No |
| 41 | 1,1,1-Trichloroethane | <0.5 | No Criteria | < 0.5 | Ud |
| 42 | 1,1,2-Trichloroethane | <0.5 | 42 | < 0.05 | No |
| 43 | Trichloroethylene | <0.5 | 81 | < 0.5 | No |
| 44 | Vinyl Chloride | <0.5 | 525 | < 0.5 | No |
| 45 | 2-Chlorophenol | <1.05 | 400 | < 1.2 | No |
| 46 | 2,4-Dichlorophenol | <1.2 | 790 | < 1.3 | No |
| 47 | 2,4-Dimethylphenol | <1 | 2300 | < 1.3 | No |
| 48 | 2-Methyl- 4,6-Dinitrophenol | <1 | 765 | < 1.2 | No |
| 49 | 2,4-Dinitrophenol | <3.89 | 14000 | < 0.7 | No |
| 50 | 2-Nitrophenol | <1.86 | No Criteria | < 1.3 | Ud |
| 51 | 4-Nitrophenol | <1.96 | No Criteria | < 1.6 | Ud |
| 52 | 3-Methyl 4-Chlorophenol | <1 | No Criteria | < 1.1 | Ud |
| 53 | Pentachlorophenol | <1.04 | 7.9 | < 1.0 | No |
| 54 | Phenol | <1 | 4600000 | < 1.3 | No |
| 55 | 2,4,6-Trichlorophenol | <1.88 | 6.5 | < 1.3 | No |
| 56 | Acenaphthene | <0.52 | 2700 | 0.0015 | No |
| 57 | Acenaphthylene | <0.39 | No Criteria | 0.00053 | Ud |
| 58 | Anthracene | <0.02 | 110000 | 0.0005 | No |
| 59 | Benzidine | <2.5 | 0.00054 | < 0.0015 | No |
| 60 | Benzo(a)Anthracene | <0.05 | 0.049 | 0.0053 | No |
| 61 | Benzo(a)Pyrene | <0.05 | 0.049 | 0.00029 | No |
| 62 | Benzo(b)Fluoranthene | <0.1 | 0.049 | 0.0046 | No |
| 63 | Benzo(ghi)Perylene | <0.09 | No Criteria | 0.0027 | Ud |
| 64 | Benzo(k)Fluoranthene | <0.05 | 0.049 | 0.0015 | No |
| 65 | Bis(2-Chloroethoxy)Methane | <0.97 | No Criteria | < 0.3 | Ud |
| 66 | Bis(2-Chloroethyl)Ether | <0.97 | 1.4 | < 0.3 | No |
| 67 | Bis(2-Chloroisopropyl)Ether | <0.81 | 170000 | Not Available | No |
| 68 | Bis(2-Ethylhexyl)Phthalate | <0.69 | 5.9 | < 0.5 | No |
| 69 | 4-Bromophenyl Phenyl Ether | <1 | No Criteria | < 0.23 | Ud |
| 70 | Butylbenzyl Phthalate | <0.26 | 5200 | < 0.52 | No |
| 71 | 2-Chloronaphthalene | <1 | 4300 | < 0.3 | No |
| 72 | 4-Chlorophenyl Phenyl Ether | <0.89 | No Criteria | < 0.3 | Ud |
| 73 | Chrysene | <0.9 | 0.049 | 0.0024 | No |
| 74 | Dibenzo(a,h)Anthracene | <0.09 | 0.049 | 0.00064 | No |
| 75 | 1,2-Dichlorobenzene | <0.5 | 17000 | < 0.8 | No |
| 76 | 1,3-Dichlorobenzene | <0.5 | 2600 | < 0.8 | No |
| 77 | 1,4-Dichlorobenzene | 0.13 | 2600 | < 0.8 | No |
| 78 | 3,3 Dichlorobenzidine | <0.9 | 0.077 | < 0.001 | No |
| 79 | Diethyl Phthalate | <1 | 120000 | < 0.24 | No |
| 80 | Dimethyl Phthalate | <1 | 2900000 | < 0.24 | No |
| 81 | Di-n-Butyl Phthalate | <0.87 | 12000 | < 0.5 | No |
| 82 | 2,4-Dinitrotoluene | <1 | 9.1 | < 0.27 | No |
| 83 | 2,6-Dinitrotoluene | <1.29 | No Criteria | < 0.29 | Ud |
| 84 | Di-n-Octyl Phthalate | 2 | No Criteria | < 0.38 | Ud |
| 85 | 1,2-Diphenylhydrazine | <1 | 0.54 | 0.0037 | No |
| 86 | Fluoranthene | <0.1 | 370 | 0.011 | No |
| 87 | Fluorene | <0.1 | 14000 | 0.00208 | No |
| 88 | Hexachlorobenzene | <0.98 | 0.00077 | 0.0000202 | No |
| 89 | Hexachlorobutadiene | <1 | 50 | < 0.3 | No |

| CTR # | Priority Pollutants | MEC or Minimum DL [(1)(2)] (µg/l) | Governing WQO/WQC (µg/l) | Maximum Background or Minimum DL [(1)(2)] (µg/l) | RP Determination[(3)] |
|---|---|---|---|---|---|
| 90 | Hexachlorocyclopentadiene | <1 | 17000 | < 0.31 | No |
| 91 | Hexachloroethane | <1 | 8.9 | < 0.2 | No |
| 92 | Indeno(1,2,3-cd)Pyrene | <0.1 | 0.049 | 0.004 | No |
| 93 | Isophorone | <0.95 | 600 | < 0.3 | No |
| 94 | Naphthalene | <1 | No Criteria | 0.0023 | Ud |
| 95 | Nitrobenzene | <0.71 | 1900 | < 0.25 | No |
| 96 | N-Nitrosodimethylamine | <0.1 | 8.1 | < 0.3 | No |
| 97 | N-Nitrosodi-n-Propylamine | <0.84 | 1.4 | < 0.001 | No |
| 98 | N-Nitrosodiphenylamine | <0.94 | 16 | < 0.001 | No |
| 99 | Phenanthrene | <0.93 | No Criteria | 0.0061 | Ud |
| 100 | Pyrene | <0.1 | 11000 | 0.0051 | No |
| 101 | 1,2,4-Trichlorobenzene | <0.94 | No Criteria | < 0.3 | Ud |
| 102 | Aldrin | 0.009 | 0.00014 | Not Available | **Yes** |
| 103 | alpha-BHC | <0.005 | 0.013 | 0.000496 | No |
| 104 | beta-BHC | 0.13 | 0.046 | 0.000413 | **Yes** |
| 105 | gamma-BHC | 0.036 | 0.063 | 0.0007034 | No |
| 106 | delta-BHC | 0.097 | No Criteria | 0.000042 | Ud |
| 107 | Chlordane (303d listed) | <0.1 | 0.00059 | 0.00018 | No |
| 108 | 4,4'-DDT (303d listed) | 0.053 | 0.00059 | 0.000066 | **Yes** |
| 109 | 4,4'-DDE (linked to DDT) | 0.05 | 0.00059 | 0.000693 | **Yes** |
| 110 | 4,4'-DDD | <0.03 | 0.00084 | 0.000313 | No |
| 111 | Dieldrin (303d listed) | 0.014 | 0.00014 | 0.000264 | **Yes** |
| 112 | alpha-Endosulfan | <0.01 | 0.0087 | 0.000031 | No |
| 113 | beta-Endolsulfan | <0.01 | 0.0087 | 0.000069 | No |
| 114 | Endosulfan Sulfate | <0.03 | 240 | 0.0000819 | No |
| 115 | Endrin | 0.021 | 0.0023 | 0.000036 | **Yes** |
| 116 | Endrin Aldehyde | <0.01 | 0.81 | Not Available | No |
| 117 | Heptachlor | 0.26 | 0.00021 | 0.000019 | **Yes** |
| 118 | Heptachlor Epoxide | 0.022 | 0.00011 | 0.00002458 | **Yes** |
| 119-125 | PCBs sum (303d listed) | <0.47 | 0.00017 | Not Available | No |
| 126 | Toxaphene | <0.5 | 0.00020 | Not Available | No |
| | Ammonia[(4)] | 118,000 | 1,520 | 210 | **Yes** |
| | Tributylin[(5)] | 0.019 | 0.061[(4)] | < 0.001 | **Yes** |
| | Total PAHs | <0.02 | 15 | 0.26 | No |

(1) The Maximum Effluent Concentration (MEC) or maximum background concentration is the actual detected concentration unless there is a "<" sign before it, in which case the value shown is the minimum detection level.

(2) The MEC or maximum background concentration is "Not Available" when there are no monitoring data for the constituent.

(3) RPA Results = Yes, if MEC > WQO/WQC, or B > WQO/WQC and MEC is detected;
= No, if MEC and B are < WQO/WQC or all effluent data are undetected;
= Undetermined (Ud), if no criteria have been promulgated.

(4 See Section C.4.b, p F-33 of this Fact Sheet for an explanation of the WQO for ammonia.

(5) WQC translated from a narrative objective in the Basin Plan. For tributyltin WQC are discussed in EPA 822-R-03-031, December 2003 Ambient Aquatic Life Water Quality Criteria for Tributyltin (TBT) – Final.

**(1) Constituents with insufficient monitoring data.** The Discharger has performed sampling and analysis for the constituents listed in the CTR. This data set was used to perform the RPA. In some cases, Reasonable Potential

cannot be determined because effluent data are limited, or ambient background concentrations are not available. The Discharger will continue to monitor for these constituents in the effluent using analytical methods that provide the best feasible detection limits. When additional data become available, a RPA will be conducted to determine whether to add numeric effluent limitations to this Order or to continue monitoring (VI Provisions C.2.a).

**(2) Constituents with no Reasonable Potential.** For constituents that do not demonstrate Reasonable Potential, monitoring is still required. If concentrations of these constituents increase significantly, the Discharger will be required to investigate the source(s) of the increase(s). Remedial measures are required if the increases pose a threat to water quality in the receiving water.

### f. Reasonable Potential Determination for the Industrial Plant

There will be one single compliance monitoring point for WQBELs in the discharges from both the Sanitary and Industrial Plants. As a consequence, the discharges will be combined before the monitoring point, E-001A. Any constituent shown to have reasonable potential in the discharge from the Industrial Plant could, in combination with the sanitary discharge, have reasonable potential at the combined monitoring point and vice versa.

A reasonable potential analysis for the Industrial Plant was conducted, as shown in Appendix A of this Fact Sheet and a summary is shown in Table F-11. The constituents that exhibited Reasonable Potential for the Industrial Plant were copper, lead, mercury, nickel, cyanide, dioxin-TEQ, alpha-BHC, endrin, heptachlor and ammonia. Of these constituents, lead, dioxin-TEQ, and alpha-BHC did not exhibit reasonable potential in the effluent from the Sanitary Plant.

**Table F-11. Summary of Reasonable Potential Determination for the – Industrial Plant**

| CTR # | Priority Pollutants | MEC or Minimum DL (1)(2) (µg/l) | Governing WQO/WQC (µg/l) | Maximum Background or Minimum DL (1)(2) (µg/l) | RPA Results(3) |
|---|---|---|---|---|---|
| 1 | Antimony | 3 | 4300 | 1.8 | No |
| 2 | Arsenic | 9.87 | 36 | 2.46 | No |
| 3 | Beryllium | <0.5 | No Criteria | 0.215 | Ud |
| 4 | Cadmium | 2.365 | 9.4 | 0.13 | No |
| 5a | Chromium (III) | No Data | No Criteria | Not Available | Ud |
| 5b | Chromium (VI) | 21.9 | 50 | 4.4 | No |
| 6 | Copper | 41.296 | 4.2 | 2.45 | **Yes** |
| 7 | Lead | 71.28 | 8.5 | 0.80 | **Yes** |
| 8 | Mercury (303d listed) | 0.034 | 0.025 | 0.0086 | **Yes** |
| 9 | Nickel | 29.935 | 12.6 | 3.7 | **Yes** |
| 10 | Selenium (303d listed) | 1.402 | 5 | 0.39 | No |
| 11 | Silver | 0.305 | 2.2 | 0.052 | No |

| CTR # | Priority Pollutants | MEC or Minimum DL [(1)(2)] (µg/l) | Governing WQO/WQC (µg/l) | Maximum Background or Minimum DL [(1)(2)] (µg/l) | RPA Results[(3)] |
|---|---|---|---|---|---|
| 12 | Thallium | 0.3 | 6.3 | 0.21 | No |
| 13 | Zinc | 56.64 | 86 | 5.1 | No |
| 14 | Cyanide | 8.5 | 1.0 | < 0.4 | **Yes** |
| 15 | Asbestos | No Data | No Criteria | Not Available | Ud |
| 16 | 2,3,7,8-TCDD (303d listed) | <8.23E-07 | 1.4E-08 | Not Available | No |
| | Dioxin-TEQ (303d listed) | 4.74E-07 | 1.4E-08[(4)] | 7.10E-08 | **Yes** |
| 17 | Acrolein | <5 | 780 | < 0.5 | No |
| 18 | Acrylonitrile | <5 | 0.66 | 0.03 | No |
| 19 | Benzene | <0.5 | 71 | < 0.05 | No |
| 20 | Bromoform | 85 | 360 | < 0.5 | No |
| 21 | Carbon Tetrachloride | <0.5 | 4.4 | 0.06 | No |
| 22 | Chlorobenzene | <0.5 | 21000 | < 0.5 | No |
| 23 | Chlorodibromomethane | 22 | 34 | < 0.05 | No |
| 24 | Chloroethane | <0.5 | No Criteria | < 0.5 | Ud |
| 25 | 2-Chloroethylvinyl ether | <0.5 | No Criteria | < 0.5 | Ud |
| 26 | Chloroform | 5.6 | No Criteria | < 0.5 | Ud |
| 27 | Dichlorobromomethane | 8.5 | 46 | < 0.05 | No |
| 28 | 1,1-Dichloroethane | <0.5 | No Criteria | < 0.05 | Ud |
| 29 | 1,2-Dichloroethane | <0.5 | 99 | 0.04 | No |
| 30 | 1,1-Dichloroethylene | <0.5 | 3.2 | < 0.5 | No |
| 31 | 1,2-Dichloropropane | <0.5 | 39 | < 0.05 | No |
| 32 | 1,3-Dichloropropylene | <0.5 | 1700 | Not Available | No |
| 33 | Ethylbenzene | 0.407 | 29000 | < 0.5 | No |
| 34 | Methyl Bromide | 0.34 | 4000 | < 0.5 | No |
| 35 | Methyl Chloride | <0.5 | No Criteria | < 0.5 | Ud |
| 36 | Methylene Chloride | 0.383 | 1600 | 0.5 | No |
| 37 | 1,1,2,2-Tetrachloroethane | <0.5 | 11 | < 0.05 | No |
| 38 | Tetrachloroethylene | <0.5 | 8.85 | < 0.05 | No |
| 39 | Toluene | 2.33 | 200000 | < 0.3 | No |
| 40 | 1,2-Trans-Dichloroethylene | <0.5 | 140000 | < 0.5 | No |
| 41 | 1,1,1-Trichloroethane | 0.7 | No Criteria | < 0.5 | Ud |
| 42 | 1,1,2-Trichloroethane | <0.5 | 42 | < 0.05 | No |
| 43 | Trichloroethylene | <0.5 | 81 | < 0.5 | No |
| 44 | Vinyl Chloride | <0.5 | 525 | < 0.5 | No |
| 45 | 2-Chlorophenol | <1.05 | 400 | < 1.2 | No |
| 46 | 2,4-Dichlorophenol | <1.2 | 790 | < 1.3 | No |
| 47 | 2,4-Dimethylphenol | <1 | 2300 | < 1.3 | No |
| 48 | 2-Methyl- 4,6-Dinitrophenol | <1 | 765 | < 1.2 | No |
| 49 | 2,4-Dinitrophenol | <3.89 | 14000 | < 0.7 | No |
| 50 | 2-Nitrophenol | <1.86 | No Criteria | < 1.3 | Ud |
| 51 | 4-Nitrophenol | <1.96 | No Criteria | < 1.6 | Ud |
| 52 | 3-Methyl 4-Chlorophenol | <1 | No Criteria | < 1.1 | Ud |
| 53 | Pentachlorophenol | <1.04 | 7.9 | < 1.0 | No |
| 54 | Phenol | <1 | 4600000 | < 1.3 | No |
| 55 | 2,4,6-Trichlorophenol | <1.88 | 6.5 | < 1.3 | No |
| 56 | Acenaphthene | <0.52 | 2700 | 0.0015 | No |
| 57 | Acenaphthylene | <0.39 | No Criteria | 0.00053 | Ud |
| 58 | Anthracene | <0.02 | 110000 | 0.0005 | No |
| 59 | Benzidine | <2.5 | 0.00054 | < 0.0015 | No |
| 60 | Benzo(a)Anthracene | <0.05 | 0.049 | 0.0053 | No |
| 61 | Benzo(a)Pyrene | <0.05 | 0.049 | 0.00029 | No |

| CTR # | Priority Pollutants | MEC or Minimum DL (1)(2) (µg/l) | Governing WQO/WQC (µg/l) | Maximum Background or Minimum DL (1)(2) (µg/l) | RPA Results(3) |
|---|---|---|---|---|---|
| 62 | Benzo(b)Fluoranthene | <0.1 | 0.049 | 0.0046 | No |
| 63 | Benzo(ghi)Perylene | <0.09 | No Criteria | 0.0027 | Ud |
| 64 | Benzo(k)Fluoranthene | <0.05 | 0.049 | 0.0015 | No |
| 65 | Bis(2-Chloroethoxy)Methane | <0.97 | No Criteria | < 0.3 | Ud |
| 66 | Bis(2-Chloroethyl)Ether | <0.97 | 1.4 | < 0.3 | No |
| 67 | Bis(2-Chloroisopropyl)Ether | <0.81 | 170000 | Not Available | No |
| 68 | Bis(2-Ethylhexyl)Phthalate | <0.69 | 5.9 | < 0.5 | No |
| 69 | 4-Bromophenyl Phenyl Ether | <1 | No Criteria | < 0.23 | Ud |
| 70 | Butylbenzyl Phthalate | <0.95 | 5200 | < 0.52 | No |
| 71 | 2-Chloronaphthalene | <1 | 4300 | < 0.3 | No |
| 72 | 4-Chlorophenyl Phenyl Ether | <0.89 | No Criteria | < 0.3 | Ud |
| 73 | Chrysene | <0.9 | 0.049 | 0.0024 | No |
| 74 | Dibenzo(a,h)Anthracene | <0.09 | 0.049 | 0.00064 | No |
| 75 | 1,2-Dichlorobenzene | <0.5 | 17000 | < 0.8 | No |
| 76 | 1,3-Dichlorobenzene | <0.5 | 2600 | < 0.8 | No |
| 77 | 1,4-Dichlorobenzene | <0.5 | 2600 | < 0.8 | No |
| 78 | 3,3 Dichlorobenzidine | <0.9 | 0.077 | < 0.001 | No |
| 79 | Diethyl Phthalate | <1 | 120000 | < 0.24 | No |
| 80 | Dimethyl Phthalate | <1 | 2900000 | < 0.24 | No |
| 81 | Di-n-Butyl Phthalate | <0.87 | 12000 | < 0.5 | No |
| 82 | 2,4-Dinitrotoluene | <1 | 9.1 | < 0.27 | No |
| 83 | 2,6-Dinitrotoluene | <1.29 | No Criteria | < 0.29 | Ud |
| 84 | Di-n-Octyl Phthalate | 2 | No Criteria | < 0.38 | Ud |
| 85 | 1,2-Diphenylhydrazine | <1 | 0.54 | 0.0037 | No |
| 86 | Fluoranthene | <0.1 | 370 | 0.011 | No |
| 87 | Fluorene | <0.1 | 14000 | 0.00208 | No |
| 88 | Hexachlorobenzene | <0.98 | 0.00077 | 0.0000202 | No |
| 89 | Hexachlorobutadiene | <1 | 50 | < 0.3 | No |
| 90 | Hexachlorocyclopentadiene | <1 | 17000 | < 0.31 | No |
| 91 | Hexachloroethane | <1 | 8.9 | < 0.2 | No |
| 92 | Indeno(1,2,3-cd)Pyrene | <0.1 | 0.049 | 0.004 | No |
| 93 | Isophorone | <0.95 | 600 | < 0.3 | No |
| 94 | Naphthalene | <1 | No Criteria | 0.0023 | Ud |
| 95 | Nitrobenzene | <0.71 | 1900 | < 0.25 | No |
| 96 | N-Nitrosodimethylamine | <0.1 | 8.1 | < 0.3 | No |
| 97 | N-Nitrosodi-n-Propylamine | <0.84 | 1.4 | < 0.001 | No |
| 98 | N-Nitrosodiphenylamine | <0.94 | 16 | < 0.001 | No |
| 99 | Phenanthrene | <0.93 | No Criteria | 0.0061 | Ud |
| 100 | Pyrene | <0.1 | 11000 | 0.0051 | No |
| 101 | 1,2,4-Trichlorobenzene | <0.94 | No Criteria | < 0.3 | Ud |
| 102 | Aldrin | <0.005 | 0.00014 | Not Available | No |
| 103 | alpha-BHC | 0.051 | 0.013 | 0.000496 | **Yes** |
| 104 | beta-BHC | 0.039 | 0.046 | 0.000413 | No |
| 105 | gamma-BHC | <0.005 | 0.063 | 0.0007034 | No |
| 106 | delta-BHC | <0.005 | No Criteria | 0.000042 | Ud |
| 107 | Chlordane (303d listed) | <0.005 | 0.00059 | 0.00018 | No |
| 108 | 4,4'-DDT (303d listed) | <0.01 | 0.00059 | 0.000066 | No |
| 109 | 4,4'-DDE (linked to DDT) | <0.01 | 0.00059 | 0.000693 | No |
| 110 | 4,4'-DDD | <0.03 | 0.00084 | 0.000313 | No |
| 111 | Dieldrin (303d listed) | <0.01 | 0.00014 | 0.000264 | No |
| 112 | alpha-Endosulfan | <0.01 | 0.0087 | 0.000031 | No |

| CTR # | Priority Pollutants | MEC or Minimum DL [(1)(2)] (µg/l) | Governing WQO/WQC (µg/l) | Maximum Background or Minimum DL [(1)(2)] (µg/l) | RPA Results[(3)] |
|---|---|---|---|---|---|
| 113 | beta-Endolsulfan | <0.01 | 0.0087 | 0.000069 | No |
| 114 | Endosulfan Sulfate | <0.03 | 240 | 0.0000819 | No |
| 115 | Endrin | 0.01 | 0.0023 | 0.000036 | **Yes** |
| 116 | Endrin Aldehyde | <0.01 | 0.81 | Not Available | No |
| 117 | Heptachlor | 0.035 | 0.00021 | 0.000019 | **Yes** |
| 118 | Heptachlor Epoxide | <0.005 | 0.00011 | 0.00002458 | No |
| 119-125 | PCBs sum (303d listed) | 0.47 | 0.00017 | Not Available | No |
| 126 | Toxaphene | <0.5 | 0.0002 | Not Available | No |
| | Ammonia[(4)] | 6,900 | 1,520 | 210 | Yes |
| | Tributylin[(5)] | <0.005 | 0.061[(4)] | < 0.005 | No |
| | Total PAHs | <0.02 | 15 | 0.26 | No |

(1) The Maximum Effluent Concentration (MEC) or maximum background concentration is the actual detected concentration unless there is a "<" sign before it, in which case the value shown is the minimum detection level.

(2) The MEC or maximum background concentration is "Not Available" when there are no monitoring data for the constituent.

(3) RPA Results = Yes, if MEC > WQO/WQC, or B > WQO/WQC and MEC is detected;
= No, if MEC and B are < WQO/WQC or all effluent data are undetected;
= Undetermined (Ud), if no criteria have been promulgated;

(4) See Section C.4.b, p F-33 of this Fact Sheet for an explanation of the WQO for ammonia.

(5) WQC translated from a narrative objective in the Basin Plan. For tributyltin WQC are discussed in EPA 822-R-03-031, December 2003 Ambient Aquatic Life Water Quality Criteria for Tributyltin (TBT) – Final.

## 4. Water Quality Based Effluent Limitation (WQBEL) Calculations.

### a. Constituents with Reasonable Potential

Reasonable potential analyses were conducted on the discharges from the Sanitary and Industrial Plants. These are shown in detail in Table 3 of Appendices A and B to this Fact sheet and are summarized in Table F-10 and Table F-11 above. Constituents with reasonable potential that were found in either the discharge from the Sanitary Plant or from the Industrial Plant, and thus requiring calculations to determine WQBELs, are:

**Table F-12 Constituents with Reasonable Potential.**

| CTR # | Constituent |
|---|---|
| 6 | Copper |
| 7 | Lead |
| 8 | Mercury |
| 9 | Nickel |
| 14 | Cyanide |
| | Dioxin-TEQ |
| 102 | Aldrin |

| | |
|---|---|
| 103 | Alpha-BHC |
| 104 | Beta-BHC |
| 108 | 4,4-DDT |
| 109 | 4,4-DDE |
| 111 | Dieldrin |
| 115 | Endrin |
| 117 | Heptachlor |
| 118 | Heptachlor Epoxide |
| | Ammonia |
| | Tributyltin |

The WQBELs are based on appropriate WQOs/WQC and the procedures specified in Section 1.4 of the SIP as explained below.

**b. Applicable Water Quality Objectives and Criteria**

The WQO or WQC used for each pollutant with reasonable potential is shown in Table F-13. Additional information regarding the derivation of WQOs and WQC is provided for specific pollutants below.

**Table F-13 Summary of Water Quality Criteria or Objectives for Constituents with Reasonable Potential.**

| CTR # | Pollutant | WQC/WQO µg/l Aquatic life-chronic | WQC/WQO µg/l Aquatic life-acute | WQC/WQO µg/l human health | Basis |
|---|---|---|---|---|---|
| 6 | Copper | 10 | 13 | | Basin Plan and CTR saltwater aquatic life |
| 7 | Lead | 8.5 | 221 | | Basin Plan and CTR saltwater aquatic life |
| 8 | Mercury | 0.025 | 2.1 | 0.051 | Basin Plan saltwater aquatic life and CTR human health |
| 9 | Nickel | 13 | 87 | 4600 | Basin Plan and CTR saltwater aquatic life and CTR human health |
| 14 | Cyanide | 1 | 1 | 220000 | NTR saltwater aquatic life and human health |
| | Dioxin-TEQ | | | 1.4E-08 | Basin Plan narrative (bioaccumulation) |
| 102 | Aldrin | | 1.3 | 0.00014 | CTR saltwater aquatic life and human health |
| 103 | Alpha-BHC | | | 0.013 | CTR Human health |
| 104 | Beta-BHC | | | 0.046 | CTR Human health |
| 108 | 4,4-DDT | | | 0.00059 | CTR Human health |
| 109 | 4,4-DDE | | | 0.00059 | CTR Human health |
| 111 | Dieldrin | 0.0019 | 0.71 | 0.00014 | CTR saltwater aquatic life and human health |
| 115 | Endrin | 0.0023 | 0.037 | 0.81 | CTR saltwater aquatic life and |

| CTR # | Pollutant | WQC/WQO µg/l Aquatic life-chronic | WQC/WQO µg/l Aquatic life-acute | WQC/WQO µg/l human health | Basis |
|---|---|---|---|---|---|
| | | | | | human health |
| 117 | Heptachlor | 0.0036 | 0.053 | 0.00021 | CTR saltwater aquatic life and human health |
| 118 | Heptachlor Epoxide | 0.0036 | 0.053 | 0.00011 | CTR saltwater aquatic life and human health |
| | Ammonia | 1,500 | 14,000 | | Basin Plan |
| | Tributyltin | 0.0074 | 0.42 | | Basin Plan narrative (toxicity) |

**Copper:** The salt water acute and chronic objectives from the Basin Plan and the CTR for copper for protection of aquatic life are 13 µg/l and 10 µg/l, respectively. These objectives were determined using site-specific translators of 0.74 (chronic) and 0.88 (acute), as recommended by the Clean Estuary Partnership's *North of Dumbarton Bridge Copper and Nickel Development and Selection of Final Translators (2005)*. Site-specific translators were applied to the chronic (3.1 µg/l dissolved metal) and acute (4.8 µg/l dissolved metal) criteria of the Basin Plan and the CTR. In addition, a water effects ratio (WER) of 2.4, as recommended by the Clean Estuary Partnership's *North of Dumbarton Bridge Copper and Nickel Site-Specific Objective (SSO) Derivation (December 2004),* was applied, in accordance with USEPA guidance – Interim Guidance on Determination and Use of Water Effect Ratios for Metals (EPA-823-B-94-001).

**Nickel:** The salt water acute and chronic objectives from the Basin Plan and the CTR for nickel for protection of aquatic life are 87 µg/l and 13 µg/l, respectively. These objectives were determined using site-specific translators of 0.65 (chronic) and 0.85 (acute), as recommended by the Clean Estuary Partnership's *North of Dumbarton Bridge Copper and Nickel Development and Selection of Final Translators* (2005). Site-specific translators were applied to the chronic (8.2 µg/l dissolved metal) and acute (74 µg/l dissolved metal) criteria of the Basin Plan and the CTR.

**Dioxin-TEQ:** The Basin Plan contains a narrative WQO for bioaccumulative substances: "Many pollutants can accumulate on particulates, in sediments, or bioaccumulate in fish and other aquatic organisms. Controllable water quality factors shall not cause a detrimental increase in concentrations of toxic substances found in bottom sediments or aquatic life. Effects on aquatic organism, wildlife and human health will be considered." This narrative WQO applies to dioxin and furan compounds, based in part on the consensus of the scientific community that these compounds associate with particulates, accumulate in sediments, and bioaccumulate in the fatty tissue of fish and other organisms. USEPA's 303(d) listing determined that the narrative objective for bioaccumulative pollutants was not met in San Francisco Bay

because of the levels of dioxins and furans in fish tissue, and dioxins and furans are controllable water quality factors.

The CTR establishes a numeric human health WQO of 0.014 picogram per liter for 2,3,7,8-tetrachlorinated dibenzo-p-dioxin (2,3,7,8-TCDD) based on consumption of aquatic organisms. The preamble of the CTR states that California NPDES permits should use toxicity equivalents (TEQs) where dioxin-like compounds have a reasonable potential with respect to narrative criteria. In USEPA's National Recommended WQOs, December 2002, USEPA published the 1998 World Health Organization Toxicity Equivalence Factor (TEF) scheme. In addition, the CTR preamble states USEPA's intent to adopt revised WQC guidance subsequent to their health reassessment for dioxin-like compounds. Therefore, the narrative bioaccumulation objective is translated into a numeric criterion expressed in 2,3,7,8-TCDD equivalents (or dioxin-TEQ) based on the CTR criterion for 2,3,7,8-TCDD and the application of the Toxic Equivalence Factors (TEFs) for dioxins and furans adopted by the World Health Organization in 1998.

**Ammonia:** The Basin Plan contains WQOs for un-ionized ammonia (ammonia) of 0.025 mg/l as annual median, 0.16 mg/l as a maximum north of the Golden Gate Channel, and 0.4 mg/l as a maximum south of the Golden Gate Channel. This permit assumes a translation of ammonia to total ammonia concentrations as nitrogen because there are no sampling and laboratory analytical methods that will measure only ammonia. Because the fraction of ammonia in total ammonia depends on pH, salinity, and temperature the equivalent total ammonia concentrations that are protective of beneficial uses will vary throughout the Bay. Therefore the Board recommends using the closest Regional Monitoring Program (RMP) station to an outfall to determine the percentage of total ammonia in a discharge that will be converted to toxic ammonia in the receiving water.

To convert the chronic ammonia WQO to an equivalent total ammonia concentration, the median ammonia fraction is used. To convert the acute ammonia WQO to an equivalent total ammonia concentration, the 90$^{th}$ percentile ammonia fraction is used

At the nearest Regional Monitoring Program station, Oyster point, for receiving water the observed maximum total ammonia concentration (as N) that includes both ammonia and the ammonium ion is 0.22 mg/l, The observed median concentration at this station was 0.10 mg/l. The WQO for ammonia has been calculated at 1,520 µg/l for chronic toxic effects and 14,450 µg/l for acute toxic effects.

**Tributyltin**: The Basin Plan contains a narrative WQO for toxicity: "All waters shall be maintained free of toxic substances in concentrations that are lethal to or that produce other detrimental responses in aquatic organisms." This narrative WQO applies to tributyltin because it is a highly toxic biocide that is a

problem in the aquatic environment. USEPA has developed water quality criteria (for freshwater and saltwater) for tributyltin (TBT) through its authority under Section 304(a) of the Clean Water Act [Ambient Aquatic Life Water Quality Criteria for Tributyltin (TBT) – Final EPA-822-031 December 2003]. Therefore the narrative toxicity objective is translated into numeric criteria expressed as 0.0074 µg/l for chronic toxic effects and 0.042 µg/l for acute toxic effects.

### c. Factors in Calculating WQBELs

#### (1) Coefficient of Variation

One factor used to calculate WQBELs for an existing discharge is the coefficient of variation (CV), a statistical parameter reflecting the variability of pollutant concentrations in the discharge. Actual discharge data are typically analyzed to determine CVs. An individual CV could be calculated for each constituent at the Sanitary Plant by itself. However, no sampling data are available for the new combined sampling point EFF-001A. This point reflects the combined flows from both the Sanitary and Industrial Plants. When such data are unavailable, the SIP allows for a default CV of 0.6 to be used in the WQBEL calculations. Therefore, WQBEL calculations for pollutants in the combined outflow use the default CV value of 0.6. CVs for individual constituents at the Sanitary Plant may be greater than 0.6 but combining the Sanitary and Industrial Plants flows should attenuate the variability of the combined discharge concentrations.

For cyanide, however, a different CV has been used. When effluent is chlorinated, experience has shown that the analytical method used for cyanide indicates the false presence of cyanide. Such is the case for samples collected from sampling point EFF-001San or EFF-001A. To avoid this, samples for cyanide analysis are collected after the effluent has been dechlorinated. Dechlorinated samples can be collected from sampling point EFF-002. Unlike sampling point EFF-001A, there are sampling data for cyanide from point EFF-002 and these data were used to calculate the CV (0.76) to determine effluent limits.

#### (2) Dilution

Credit for dilution of the discharge within the receiving water may be granted if assimilative capacity exists. Pursuant to Section 1.4.2.1 of the SIP, dilution credit may be limited or denied on a pollutant-by-pollutant basis. In response to the State Water Board's Order No. 2001-06, the Regional Water Board has evaluated the assimilative capacity of the receiving water for 303(d)-listed pollutants for which the Discharger has reasonable potential to cause or contribute to an excursion above any State water quality standard in its discharge. The evaluation included a review of RMP data, effluent data, and WQOs/WQC. From this evaluation, it was determined that the assimilative capacity is highly variable because of the complex hydrology of the receiving

water. Therefore, there is uncertainty associated with the representative nature of the appropriate ambient background data to conclusively quantify the assimilative capacity of the receiving water.

(i) For non-bioaccumulative pollutants (except ammonia and cyanide), a conservative allowance of 10:1 dilution for discharges to the Bay has been assigned for protection of beneficial uses. The basis for limiting dilution to 10:1 is that (1) no more than 10:1 dilution was granted in the previous Order, (2) the Basin Plan's discharge prohibition number 1 generally prohibits discharges without a 10:1 dilution, and (3) SIP Section 1.4.2 allows for limiting the dilution credit. The following further outlines the basis for derivation of the dilution credit.

- A far-field background station is appropriate because the receiving water body is a very complex estuarine system with highly variable and seasonal upstream freshwater inflows and diurnal tidal saltwater inputs.
- Because of the complex hydrology of the San Francisco Bay, a mixing zone has not been established.
- Previous dilution studies do not fully account for the cumulative effects of other wastewater discharges to the system.
- The SIP allows limiting a mixing zone and dilution credit for persistent pollutants (e.g., copper, silver, nickel, and lead).

The main justification for using a 10:1 dilution credit is the uncertainty in accurately determining both ambient background and the mixing zone in a complex estuarine system with multiple wastewater discharges.

(ii) For certain bioaccumulative pollutants, based on best professional judgment, dilution credit is not included in calculating the final WQBELs. This determination is based on available data on concentrations of these pollutants in aquatic organisms, sediment, and the water column.

The Regional Water Board placed mercury on the CWA Section 303(d) list. USEPA then added dioxin and furan compounds, dieldrin, and 4,4-DDT to the CWA Section 303(d) list (and 4,4-DDE is related to 4,4-DDT). The following factors suggest that there is no more assimilative capacity in the Bay for these pollutants. San Francisco Bay fish tissue data show that these pollutants exceed screening levels. The fish tissue data are contained in *Contaminant Concentrations in Fish from San Francisco Bay 1997* (May 1997). Denial of dilution credits for these pollutants is further justified by fish advisories for the San Francisco Bay. The Office of Environmental Health and Hazard Assessment (OEHHA) performed a preliminary review of the data from the 1994 San Francisco Bay pilot study, *Contaminated Levels in Fish Tissue from San Francisco Bay*. The results of the study showed elevated levels of chemical contaminants in the fish tissues. Based on these results,

OEHHA issued an interim consumption advisory covering certain fish species from the Bay in December 1994. This interim consumption advice was issued and is still in effect owing to health concerns based on exposure to sport fish from the Bay contaminated with mercury, dioxins, and pesticides (e.g., dieldrin and 4,4-DDT). A dilution credit cannot be granted when there is no assimilative capacity. Section 2.1.1 of the SIP states that, for bioaccumulative compounds on the 303(d) list, the Regional Water Board should consider whether mass-loading limitations should be limited to current levels. The Regional Water Board finds that mass-loading limitations are warranted for mercury to ensure that this discharge does not contribute further to impairment of the narrative objective for bioaccumulation.

(iii) For ammonia, a non-persistent pollutant, estimated actual initial dilution levels have been used to calculate the effluent limit. This is justified because ammonia would be quickly dispersed and degraded to a non-toxic state very rapidly. An engineering study on the actual dilution was performed by the Airfield Development Engineering Consultant on behalf of the NBSU and submitted on December 12, 2000. This was part of a larger study to estimate hydrodynamic impacts on the Bay by the proposed runway extension.

The discharge is pumped through a 60” pipe to a 654-ft diffuser section located approximately 5,200 ft offshore, at a depth 20 feet below mean lower low water, from Pt. San Bruno. The diffuser consists of 66 three-inch openings spaced 7-ft apart. At a point in the immediate vicinity of the diffuser a 74:1 instant dilution was calculated using the CORMIX model to estimate mixing of the effluent under tidal conditions. Dilution rates at other points were estimated. At a point approximately 1.5 km from the diffuser into the Bay (to the east), a dilution of 270:1 was estimated. In calculating the water quality based effluent limits (maximum daily and average monthly) the lowest dilution rate, i.e. 74:1 (or D = 73), was used.

(iv) For cyanide, a non-persistent pollutant that quickly disperses and degrades like ammonia, a dilution rate of 73:1 (or D = 72) was used to calculate the water quality based effluent limits. Whereas “full” dilution of 74:1 was granted for ammonia, less dilution is granted for cyanide because SIP Section 1.4.2.2 dictates that mixing zones be as small as practicable. Limiting dilution is equivalent to decreasing the size of the allowed mixing zone. The different approach for cyanide (versus ammonia) reflects the fact that cyanide has been regulated in permits for decades in this region. As a result of past conservative policies and changes in policies and standards, the process for deriving effluent limits for cyanide are more stringent than those for ammonia to comply with antidegradation. In other words, because past policies have resulted in very stringent limitations, to backslide from these limits, CWA 303(d)(4) provides that there must be compliance with antidegradation policies.

Since the background documentation for the proposed cyanide site-specific objectives included an antidegradation analysis, which concluded that certain effluent limitations resulting from implementation of the site-specific objectives (assuming 10:1 dilution) would not degrade water quality, the dilution credit used here is the dilution credit that results in effluent limits no greater than those identified in the site-specific objectives documents for this Discharger. This resultant dilution credit for cyanide is also in compliance with the SIP, which requires the mixing zone be as small as practicable. Additionally, consistent with the site-specific objective conclusion on antidegradation, to further ensure that water quality is not degraded, this Order requires a cyanide action plan similar to that proposed with the site-specific objective.

**(d) Calculated WQBELs**

These WQBELs were calculated following the procedures described in Section 1.4 of the SIP. For dioxin-TEQ and tributyltin, where no numeric water quality objectives have been promulgated, these calculations rely on water quality criteria developed to translate the Basin Plan's narrative bioaccumulation and toxicity objectives as required by 40 CFR 122.44(d)(vi). Detailed WQBEL calculations are shown below in Table F-15.

With the exception of the sample collected for cyanide compliance, samples collected for compliance with these limits are taken at sampling point EFF-001A. The cyanide sample is collected at sampling point EFF-002.

## Table F-14 Summary of WQBELs for Constituents with Reasonable Potential

| CTR No. | Pollutant | Average Monthly Effluent Limit (AMEL), µg/l | Maximum Daily Effluent Limit (MDEL), µg/l |
|---|---|---|---|
| 6 | Copper | 54 | 110 |
| 6 | Copper alternate limit | 42 | 84 |
| 7 | Lead | 64 | 130 |
| 8 | Mercury | 0.020 | 0.041 |
| 9 | Nickel | 76 | 150 |
| 14 | Cyanide | 20 | 44 |
| | Dioxin-TEQ | 1.4E-08 | 2.8E-08 |
| 102 | Aldrin | 0.00014 | 0.00028 |
| 103 | Alpha-BHC | 0.13 | 0.26 |
| 104 | Beta-BHC | 0.46 | 0.92 |
| 108 | 4,4-DDT | 0.00059 | 0.0012 |
| 109 | 4,4-DDE | 0.00059 | 0.0012 |
| 111 | Dieldrin | 0.00014 | 0.00028 |
| 115 | Endrin | 0.019 | 0.037 |
| 117 | Heptachlor | 0.002 | 0.0041 |
| 118 | Heptachlor Epoxide | 0.00089 | 0.0018 |
| | Ammonia | 110,000 | 310,000 |
| | Tributyltin | 0.061 | 0.12 |

## Table F-15. Calculation of WQBELs

| PRIORITY POLLUTANTS | Copper | | Lead | Mercury | Nickel |
|---|---|---|---|---|---|
| Units | ug/L | | ug/L | ug/L | ug/L |
| Basis and Criteria type | BP & CTR, saltwater aq Life | Alt Limits Using SSOs | BP & CTR saltwater aq. life | BP saltwater aq. life and CTR human health | BP & CTR saltwater aq life & CTR human health |
| CTR Criteria - Acute | 5.5 | ------- | 221 | 2.1 | 87 |
| CTR Criteria - Chronic | 4.2 | ------- | 8.5 | 0.025 | 13 |
| SSO Criteria - Acute | ------- | 3.9 | | | |
| SSO Criteria - Chronic | ------- | 2.5 | | | |
| Water Effects Ratio (WER) | 2.4 | 2.4 | 1 | | 1 |
| Lowest WQO | 4.2 | 2.5 | 8.5 | 0.025 | 13 |
| CTR Conv. Factor for Saltwater (Acute & Chronic) | 0.83 | 0.83 | 0.95 | | 0.99 |
| Site-Specific Translator - MDEL | 0.88 | 0.88 | | | 0.85 |
| Site-Specific Translator - AMEL | 0.74 | 0.74 | | | 0.65 |
| Dilution Factor (D) (if applicable) | 9 | 9 | 9 | 0 | 9 |
| No. of samples per month | 4 | 4 | 4 | 4 | 4 |
| Aquatic life criteria analysis required? (Y/N) | Y | Y | Y | Y | Y |
| HH criteria analysis required? (Y/N) | N | N | N | Y | Y |
| Applicable Acute WQO | 13 | 11 | 221 | 2.10 | 87 |
| Applicable Chronic WQO | 10 | 8.1 | 8.5 | 0.025 | 13 |
| HH criteria | ----- | ----- | ----- | 0.051 | 4600 |
| Background (Max. Conc for Aquatic Life calc) | 2.45 | 2.45 | 0.804 | 0.0086 | 3.73 |
| Background (Av. Conc for Human Health calc) | | | | 0.0022 | 1.79 |
| Is pollutant Bioaccumulative(Y/N)? (e.g., Hg) | N | N | N | Y | N |
| ECA acute | 109 | 84 | 2201 | 2.10 | 837 |
| ECA chronic | 78 | 59 | 78 | 0.025 | 93 |
| ECA HH | | | | 0.051 | 45984 |
| CV | 0.60 | 0.60 | 0.60 | 0.60 | 0.60 |
| ECA acute mult99 | 0.32 | 0.32 | 0.32 | 0.32 | 0.32 |
| ECA chronic mult99 | 0.53 | 0.53 | 0.53 | 0.53 | 0.53 |
| LTA acute | 34.95 | 27.07 | 706.69 | 0.67 | 268.75 |
| LTA chronic | 41.40 | 31.13 | 41.11 | 0.01 | 48.83 |
| Minimum of LTAs | 35 | 27 | 41.11 | 0.01 | 49 |
| AMEL mult95 | 1.55 | 1.55 | 1.55 | 1.55 | 1.55 |
| MDEL mult99 | 3.11 | 3.11 | 3.11 | 3.11 | 3.11 |
| AMEL (aq life) | 54.26 | 42.03 | 63.82 | 0.020 | 75.81 |
| MDEL(aq life) | 108.86 | 84.31 | 128.03 | 0.041 | 152.08 |
| MDEL/AMEL Multiplier | 2.01 | 2.01 | 2.01 | 2.01 | 2.01 |
| AMEL (human hlth) | | | | 0.051 | 45984 |
| MDEL (human hlth) | | | | 0.102 | 92252 |
| Minimum of AMEL for Aq. life vs HH | 54 | 42 | 64 | 0.020 | 76 |
| Minimum of MDEL for Aq. Life vs HH | 109 | 84 | 128 | 0.041 | 152 |
| **WQBEL - AMEL** | 54 | 42 | 64 | 0.020 | 76 |
| **WQBEL - MDEL** | 110 | 84 | 130 | 0.041 | 150 |

| PRIORITY POLLUTANTS | Cyanide | Dioxin TEQ | Aldrin | ά-BHC | βeta-BHC |
|---|---|---|---|---|---|
| **Units** | **ug/L** | **ug/L** | | **ug/L** | |
| Basis and Criteria type | NTR saltwater aq. Life & human health | BP narrative (bioaccumul ation | CTR saltwater aq. Life and human health | CTR human health | CTR human health |
| CTR Criteria - Acute | 1.0 | ------- | 1.3 | ------- | ------- |
| CTR Criteria - Chronic | 1.0 | ------- | ------- | ------- | ------- |
| SSO Criteria - Acute | | | | | |
| SSO Criteria - Chronic | | | | | |
| Water Effects Ratio (WER) | | | | | |
| Lowest WQO | 1.0 | 1.40E-08 | 0.00014 | 0.013 | 0.046 |
| CTR Conv. Factor for Saltwater (Acute&Chronic) | | | | | |
| Site-Specific Translator - MDEL | | | | | |
| Site-Specific Translator - AMEL | | | | | |
| Dilution Factor (D) (if applicable) | 72 | 0 | 9 | 9 | 9 |
| No. of samples per month | 4 | 4 | 4 | 4 | 4 |
| Aquatic life criteria analysis required? (Y/N) | Y | N | Y | N | N |
| HH criteria analysis required? (Y/N) | Y | Y | Y | Y | Y |
| Applicable Acute WQO | 1.0 | ------- | 1.3 | | ------- |
| Applicable Chronic WQO | 1.0 | ------- | ------- | | ------- |
| HH criteria | 220,000 | 1.40E-08 | 0.00014 | 0.013 | 0.046 |
| Background (Max. Conc for Aquatic Life calc) | 0.4 | 7.10E-08 | No Data | 0.00050 | 0.00041 |
| Background (Av. Conc for Human Health calc) | | 5.00E-08 | | 0.00024 | 0.00014 |
| Is pollutant Bioaccumulative(Y/N)? (e.g., Hg) | N | Y | N | N | N |
| ECA acute | 44.2 | | 1.3 | | |
| ECA chronic | 44.2 | | ------- | | |
| ECA HH | 220000 | 1.40E-08 | 1.40E-04 | 0.128 | 4.56E-01 |
| CV | 0.76 | 0.60 | 0.60 | 0.60 | 0.60 |
| ECA acute mult99 | 0.26 | | 0.32 | | |
| ECA chronic mult99 | 0.46 | | 0.53 | | |
| LTA acute | 11.6 | | 0.42 | | |
| LTA chronic | 20.2 | | | | |
| Minimum of LTAs | 11.6 | | 0.42 | | |
| AMEL mult95 | 1.71 | 1.55 | 1.55 | 1.55 | 1.55 |
| MDEL mult99 | 3.82 | 3.11 | 3.11 | 3.11 | 3.11 |
| AMEL (aq life) | 19.8 | | 0.65 | | |
| MDEL(aq life) | 44.2 | | 1.30 | | |
| MDEL/AMEL Multiplier | 2.23 | 2.01 | 2.01 | 2.01 | 2.01 |
| AMEL (human hlth) | 220000 | 1.40E-08 | 0.00014 | 0.128 | 0.456 |
| MDEL (human hlth) | 491600 | 2.81E-08 | 0.00028 | 0.256 | 0.915 |
| Minimum of AMEL for Aq. life vs HH | 20 | 1.40E-08 | 0.00014 | 0.128 | 0.456 |
| Minimum of MDEL for Aq. Life vs HH | 44 | 2.81E-08 | 0.00028 | 0.256 | 0.915 |
| **WQBEL - AMEL** | 20 | 1.40E-08 | 0.00014 | 0.128 | 0.46 |
| **WQBEL - MDEL** | 44 | 2.81E-08 | 0.00028 | 0.256 | 0.92 |

| **PRIORITY POLLUTANTS** | **4,4-DDT** | **4,4-DDE** | **Dieldrin** | **Endrin** | **Heptachlor** | **Heptachlor Epoxide** | **Tributyltin** |
|---|---|---|---|---|---|---|---|
| **Units** | **ug/L** | **ug/L** | **ug/L** | **ug/L** | **ug/L** | **ug/L** | **ug/L** |
| Basis and Criteria type | CTR human health | CTR human health | CTR saltwater aq. life & human health | CTR saltwater aq. life & human health | CTR saltwater aq. life & human health | CTR saltwater aq. life & human health | Basin Plan narrative (toxicity) |
| CTR Criteria - Acute | 0.13 | ------- | 0.71 | 0.037 | 0.053 | 0.053 | ------- |
| CTR Criteria - Chronic | 0.001 | ------- | 0.0019 | 0.0023 | 0.0036 | 0.0036 | ------- |
| SSO Criteria - Acute | | | | | | | |
| SSO Criteria - Chronic | | | | | | | |
| Water Effects Ratio (WER) | | | | | | | |
| Lowest WQO | 0.00059 | 0.00059 | 0.00014 | 0.0023 | 0.00021 | 0.00011 | 0.0074 |
| CTR Conv. Factor for Saltwater (Acute&Chronic) | | | | | | | |
| Site-Specific Translator - MDEL | | | | | | | |
| Site-Specific Translator - AMEL | | | | | | | |
| Dilution Factor (D) (if applicable) | 0 | 0 | 0 | 9 | 9 | 9 | 9 |
| No. of samples per month | 4 | 4 | 4 | 4 | 4 | 4 | 4 |
| Aquatic life criteria analysis required? (Y/N) | Y | N | Y | Y | Y | Y | Y |
| HH criteria analysis required? (Y/N) | Y | Y | Y | Y | Y | Y | N |
| Applicable Acute WQO | 0.13 | ------- | 0.71 | 0.037 | 0.053 | 0.053 | 0.42 |
| Applicable Chronic WQO | 0.001 | ------- | 0.0019 | 0.0023 | 0.0036 | 0.0036 | 0.0074 |
| HH criteria | 0.00059 | 0.00059 | 0.00014 | 0.81 | 0.00021 | 0.00011 | |
| Background (Max. Conc for Aquatic Life calc) | 0.000066 | 0.00069 | 0.00026 | 0.000036 | 0.000019 | 0.000025 | 0 |
| Background (Av. Conc for Human Health calc) | 0.000026 | 0.000069 | 0.000073 | 0.000013 | 0.0000075 | 0.000024 | 0 |
| Is pollutant Bioaccumulative(Y/N)? (e.g., Hg) | Y | Y | Y | N | N | N | N |
| ECA acute | 0.1 | | 0.7 | 0.4 | 0.5 | 0.5 | 4.2 |
| ECA chronic | 0.0 | | 0.0 | 0.0 | 0.0 | 0.0 | .074 |
| ECA HH | 5.90E-04 | 5.90E-04 | 1.40E-04 | 8.10E+00 | 2.03E-03 | 8.87E-04 | |
| CV | 0.60 | 0.60 | 0.60 | 0.60 | 0.60 | 0.60 | 0.60 |
| ECA acute mult99 | 0.32 | | 0.32 | 0.32 | 0.32 | 0.32 | 0.32 |
| ECA chronic mult99 | 0.53 | | 0.53 | 0.53 | 0.53 | 0.53 | 0.53 |
| LTA acute | 0.04 | | 0.23 | 0.12 | 0.17 | 0.17 | |
| LTA chronic | 0.00 | | 0.00 | 0.01 | 0.02 | 0.02 | 0.04 |
| Minimum of LTAs | 0.00 | | 0.00 | 0.01 | 0.02 | 0.02 | 0.04 |
| AMEL mult95 | 1.55 | 1.55 | 1.55 | 1.55 | 1.55 | 1.55 | 1.55 |
| MDEL mult99 | 3.11 | 3.11 | 3.11 | 3.11 | 3.11 | 3.11 | 3.11 |
| AMEL (aq life) | 8.2E-04 | | 1.6E-03 | 0.02 | 0.03 | 0.03 | 0.06 |
| MDEL(aq life) | 1.6E-03 | | 3.1E-03 | 0.04 | 0.06 | 0.06 | 0.12 |
| MDEL/AMEL Multiplier | 2.01 | 2.01 | 2.01 | 2.01 | 2.01 | 2.01 | 2.01 |
| AMEL (human hlth) | 0.00059 | 0.00059 | 0.00014 | 8.1 | 0.0020 | 0.00089 | |
| MDEL (human hlth) | 0.0012 | 0.0012 | 0.00028 | 16 | 0.0041 | 0.0018 | |
| Minimum of AMEL for Aq. life vs HH | 0.00059 | 0.00059 | 0.00014 | 0.019 | 0.0020 | 0.00089 | 0.061 |
| Minimum of MDEL for Aq. Life vs HH | 0.0012 | 0.0012 | 0.00028 | 0.037 | 0.0041 | 0.0018 | 0.12 |
| **WQBEL - AMEL** | 0.00059 | 0.00059 | 0.00014 | 0.019 | 0.0020 | 0.00089 | 0.061 |
| **WQBEL - MDEL** | 0.0012 | 0.0012 | 0.00028 | 0.037 | 0.0041 | 0.0018 | 0.12 |
| | | | | | | | |

| | Total Ammonia Acute, mg/l | Total Ammonia Chronic, mg/l |
|---|---|---|
| Basis and Criteria type | Basin Plan | Basin Plan |
| CTR Criteria -Acute | 14.45 | |
| CTR Criteria -Chronic | | 1.52 |
| Lowest WQO | 14.45 | 1.52 |
| Dilution Factor (D) (if applicable) | 73 | 73 |
| No. of samples per month | 4 | 30 |
| Aquatic life criteria analysis required? (Y/N) | y | y |
| HH criteria analysis required? (Y/N) | N | N |
| Applicable Acute WQO | 14.45 | |
| Applicable Chronic WQO | | 1.52 |
| HH criteria | N | N |
| Background (Maximum Conc for Aquatic Life calc) | 0.21 | 0.1[1] |
| Background (Average Conc for Human Health calc) | | |
| Is the pollutant Bioaccumulative(Y/N)? (e.g., Hg) | N | N |
| ECA acute | 1054 | |
| ECA chronic | | 105.2 |
| ECA HH | | |
| No. of data points <10 or at least 80% of data reported non detect? (Y/N) | N | N |
| Avg of effluent data points | | |
| Std Dev of effluent data points | | |
| CV calculated | | |
| CV (Selected) - Final | 0.6 | 0.6 |
| ECA acute mult99 | 0.32 | |
| ECA chronic mult99 | | 0.93 |
| LTA acute | 338.4 | |
| LTA chronic | | 97.8 |
| minimum of LTAs | 338.4 | 97.8 |
| AMEL mult95 | 1.55 | 1.19 |
| MDEL mult99 | 3.11 | 3.11 |
| AMEL (aq life) | 525 | 116 |
| MDEL(aq life) | 1054 | 305 |
| AMEL (human hlth) | | |
| MDEL (human hlth) | | |
| minimum of AMEL for Aq. life vs HH | 525 | 116 |
| minimum of MDEL for Aq. Life vs HH | 1054 | 305 |
| Current limit in permit (30-day average) | ----- | ----- |
| Current limit in permit (daily) | ----- | ----- |
| Final limit - AMEL | 525 | 116 |
| Final limit - MDEL | 1054 | 305 |
| Max Effl Conc (MEC) | 118 | 118 |

[1] Because the Basin Plan chronic un-ionized ammonia objective is an annual median, the median background concentrationis used in the reasonable potential analysis.

### (e) Alternate Limits for Copper

The Regional Water Board has proposed site-specific objectives for copper. WQBELs based on these objectives would differ from those calculated using existing criteria. Therefore, this Order includes alternative limits to become effective if site specific objectives are adopted. As described in the Clean Estuary Partnership's North of Dumbarton Bridge Copper and Nickel Site-Specific Objective Determination (December 2004), the Regional Water Board is

proposing to develop site-specific criteria for copper in non-ocean, marine waters of the Region that are 2.5 and 3.9 µg/l as four-day and one-hour average criteria. Final effluent limitations, calculated according to Section 1.4 of the SIP, using a WER of 2.4, would be 52 µg/l (AMEL) and 84 µg/l (MDEL). If the site-specific objectives for copper are adopted, the alternate effluent limits will become effective upon the adoption date, so long as the site-specific objectives and their current justification remain unchanged from those proposed in the December 2004 report.

### 5. Anti-Backsliding/Antidegradation

The Clean Water Act (33 U.S.C. § 1251(o)) generally prohibits backsliding, i.e., adopting new permit limits that are less stringent than the limits in the permit being replaced, except under special circumstances. Table F-16 compares the newly calculated limits with limits established in the previous permits.

**Table F-16. Newly Calculated Limits versus Previous Limits**

| CTR # | Pollutant | San Permit 01-045 AMEL, µg/l | San Permit 01-045 MDEL, µg/l | Ind. Permit R2-2002-045 AMEL, µg/l | Ind. Permit R2-2002-045 MDEL, µg/l | New calc. limits AMEL, µg/l | New calc. limits MDEL, µg/l |
|---|---|---|---|---|---|---|---|
| 6 | Copper | | 33 (interim) | | 17 (interim) | 54 | 110 |
| 6 | Copper alt. limit | | | | | 42 | 84 |
| 7 | Lead | | | | | 64 | 130 |
| 8 | Mercury | 0.087 (interim) | 1 (interim) | 0.087 (interim) | 1 (interim) | 0.02 | 0.041 |
| 9 | Nickel | | | 30 | 70 | 76 | 150 |
| 14 | Cyanide | | 10 (interim) | | | 20 | 44 |
| | | | | | | | |
| | Dioxin-TEQ | | | | | 1.4E-08 | 2.8E-08 |
| 102 | Aldrin | | | | | 0.00014 | 0.00028 |
| 103 | Alpha-BHC | | 0.078 (interim) | | | 0.13 | 0.26 |
| 104 | Beta-BHC | | 0.085 (interim) | | 0.19 (interim) | 0.46 | 0.92 |
| 108 | 4,4-DDT | | | | | 0.00059 | 0.0012 |
| 109 | 4,4-DDE | 0.00059 | 0.0012 | 0.00059 | 0.0012 | 0.00059 | 0.0012 |
| 111 | Dieldrin | 0.00014 | 0.00028 | 0.00014 | 0.00028 | 0.00014 | 0.00028 |
| 115 | Endrin | | | | | 0.019 | 0.037 |
| 117 | Heptachlor | | | | | 0.002 | 0.0041 |
| 118 | Heptachlor Epoxide | | | | | 0.00089 | 0.0018 |
| | Ammonia | | | | | 120,000 | 310,000 |
| | Tributyltin | 0.13 | 0.37 | | | 0.061 | 0.12 |

Table F-16 shows that new effluent limits have been established for lead, nickel, dioxin-TEQ, aldrin, 4,4-DDT, endrin, heptachlor, heptachlor epoxide and ammonia. For mercury, 4,4-DDE, dieldrin, and tributyltin the newly calculated limits are equivalent or more stringent than the limits in the previous permit.

For copper, cyanide, alpha-BHC, and beta-BHC, the newly calculated limits may appear to be less stringent than those in the previous Sanitary Plant permit. However, this is not necessarily the case since a new compliance point is specified in the Order that includes Industrial Plant effluents in which cyanide, alpha-BHC and beta-BHC were not limited (the new cyanide compliance point also includes effluent from other NBSU dischargers). Even if the limits are less stringent, moving the monitoring station is a material and substantial alteration to the permitted facility because it changes the effluent being monitored. Thus, under the Clean Water Act (33USC §1251(o)(2)(A)), less stringent effluent limitations can be established without violating anti-backsliding requirements. Furthermore, the previous permit limits for copper, cyanide, alpha-BHC and beta-BHC are interim limits and are not comparable to final limits proposed in this Order. According to the State Water Board's Tosco Order (WQ Order 2002-06), anti-backsliding applies to comparable limits; in other words, interim to interim and final to final.

Section III.C.8 of this Fact Sheet discusses why the new limits are consistent with antidegradation policies.

**6. Whole Effluent Acute Toxicity**

a. *Permit Requirements.* This Order includes effluent limitations for whole-effluent acute toxicity that are unchanged from the previous Order and are based on the Basin Plan (Section 4.5.5.3.1). All bioassays shall be performed according to the USEPA approved method in 40 CFR Part 136, currently "Methods for Measuring the Acute Toxicity of Effluents and Receiving Waters to Freshwater and Marine Organisms, 5th Edition." The Discharger is required to use the 5th Edition method for compliance determination upon the effective date of this Order. The previous Order required the Discharger to use the "Methods for Measuring the Acute Toxicity of Effluents and Receiving Waters to Freshwater and Marine Organisms, 3rd Edition" from permit adoption until November 30, 2002 using fathead minnows and three-spined sticklebacks. From December 1, 2002 to permit expiration, the Discharger was required to use the "Methods for Measuring the Acute Toxicity of Effluents and Receiving Waters to Freshwater and Marine Organisms, 4th Edition" using fathead minnows.

b. *Compliance History.* The Discharger's acute toxicity monitoring data from 2002 – 2006 show that there were several exceedances of the effluent limitations during the permit term, with fish survival rates ranging between 15 and 100 percent. In particular, there were several exceedances of the 11-sample 90th percentile limit of not less than 70 percent survival; 30 percent survival was reported for 8

months from October 2005 through March 2006. Enforcement actions for these exceedances are pending.

c. *Ammonia Toxicity.* If acute toxicity is observed in the future and the Discharger believes that it is due to ammonia toxicity, the Discharger must show this through a Toxicity Identification Evaluation (TIE) acceptable to the Executive Officer. If the Discharger demonstrates to the satisfaction of the Executive Officer that exceedance of the acute toxicity limitations is caused by ammonia and that the discharge is in compliance with the ammonia effluent limits, then such toxicity does not constitute a violation of this effluent limit. If ammonia toxicity is verified in the TIE, the Discharger may utilize an adjustment protocol approved by the Executive Officer for the routine bioassay testing.

**7. Whole Effluent Chronic Toxicity**

a. *Permit Requirements.* This Order includes requirements for chronic toxicity monitoring based on the Basin Plan (Section 4.5.5.3.2) and in accordance with USEPA and State Water Board Task Force guidance. This Order includes the Basin Plan narrative toxicity objective as the applicable effluent limit, implemented via monitoring with numeric values as "triggers" to initiate accelerated monitoring and to initiate a chronic toxicity reduction evaluation (TRE) as necessary. The permit requirements for chronic toxicity are also consistent with the CTR and SIP requirements.

b. *Chronic Toxicity Triggers.* This Order includes chronic toxicity triggers, which are three sample median of 10 chronic toxicity (TUc[1]) and a single sample maximum of 20 TUc based on Basin Plan Table 4-6 for dischargers to deepwater environments monitoring semi-annually.

c. *Monitoring History.* The Discharger's chronic toxicity monitoring data show that there were no exceedances of the triggers between 2003 and 2006.

d. *Screening Phase Study.* The Discharger has prepared a chronic toxicity screening phase study plan and the results of this study have been incorporated (Appendix E, Section V.B).

e. *Permit Re-opener.* The Regional Water Board will consider amending this Order to include numeric toxicity limitations if the Discharger fails to aggressively implement all reasonable control measures included in its approved TRE workplan following detection of consistent significant non-artifactual toxicity.

[1] A TUc equals 100 divided by the no observable effect level (NOEL). The NOEL is determined from IC, EC, or NOEC values. Monitoring and TRE requirements may be modified by the Executive Officer in response to the degree of toxicity detected in the effluent or in ambient waters related to the discharge. Failure to conduct the required toxicity tests or a TRE within a designated period shall result in the establishment of effluent limitations for chronic toxicity.

### 8. Chlorine

The instantaneous maximum limitation for chlorine of 0.0 mg/l is retained by this Order. This limitation is required by the Basin Plan.

## D. Interim Effluent Limitations and Compliance Schedules

The SIP and the Basin Plan authorize compliance schedules in a permit if an existing Discharger cannot immediately comply with a new and more stringent effluent limitation. The SIP and Basin Plan require the following documentation be submitted to the Regional Water Board to support a finding of infeasibility:

- Descriptions of diligent efforts the Discharger has made to quantify pollutant levels in the discharge, sources of the pollutant in the waste stream, and the results of those efforts.
- Descriptions of source control and/or pollutant minimization efforts currently underway or completed.
- Proposed schedule for additional or future source control measures, pollutant minimization, or waste treatment.
- Demonstration that the proposed schedule is as short as practicable.

The Basin Plan provides for a 10-year compliance schedule to implement measures to comply with new standards as of the effective date of those standards. The provision authorizes compliance schedules for new interpretations of other existing standards if the new interpretation results in more stringent limitations. Pursuant to State Water Board Order WQ 2007-0004, this has been limited to new interpretations of narrative standards, not numeric standards.

### 1. Feasibility Evaluation

On January 11, 2007, the Discharger submitted an Infeasibility Analysis evaluating its ability to comply with proposed final effluent limits. The Infeasibility Study asserted that the Discharger could not immediately comply with WQBELs for mercury, cyanide, dioxin-TEQ, aldrin, alpha-BHC, beta-BHC, 4,4-DDT, 4,4-DDE, dieldrin, endrin, heptachlor, and heptachlor epoxide. After the Infeasibility Study was submitted, the Regional Water Board staff independently evaluated the feasibility of compliance with the revised limits, as described below.

Regional Water Board staff concurs that immediate compliance with WQBELs for mercury, dioxin-TEQ, aldrin, 4,4-DDT, heptachlor and heptachlor epoxide is infeasible. Except for mercury, this Order establishes compliance schedules for these pollutants. Regional Water Board staff disagrees with the Discharger's assertions for cyanide because the currently proposed limits are higher than those anticipated by the Discharger based on its review of previously drafted limits. The revised limits now relate to a new compliance point and reflect a dilution ratio of 72:1, and compliance is feasible. Regional Water Board staff also disagrees with the Discharger's assertions for

alpha-BHC, beta-BHC and endrin because the currently proposed limits are higher than those anticipated by the Discharger based on its review of previously drafted limits. The revised limits now reflect a default coefficient of variation of 0.6 and a dilution ratio of 10:1, and compliance is feasible. Although Regional Water Board staff agrees that the Discharger may have difficulty complying with the 4,4-DDE and dieldrin limits, these pollutants were limited in the previous permit with limits identical to those in this Order.

Pursuant to State Water Board Order WQ2007-0004, compliance schedules are not authorized for numeric objectives or criteria that were in effect prior to the SIP. This includes Basin Plan objectives for mercury. Because it is infeasible for the Discharger to immediately comply with final WQBELs for mercury and the pesticides, the Discharger will discharge in violation of this Order. Therefore a Cease and Desist order will be adopted concurrent with this Order. The Cease and Desist Order is necessary to ensure that the Discharge achieves compliance. It establishes time schedules for the Discharger to complete necessary investigative, preventative, and remedial actions to address its imminent and threatened violations..

The Regional Water Board's approach to evaluating the feasibility of compliance is based on comparing maximum effluent concentrations (MECs) at the Sanitary and Industrial wastewater treatment plants with the calculated WQBELs. Because no monitoring data exist for the combined outfall, a more rigorous statistical analysis is impossible.

Table F-17 compares the calculated average monthly and maximum daily effluent limits with the maximum effluent concentrations (MECs) found during monitoring of effluent from the sanitary and industrial treatment plants. Because the new monitoring location (EFF-001A) for this Order is located after the waste streams from the Sanitary and Industrial Plants have been combined, a weighted average (based on actual historical average flows) was used to estimate the MEC in the combined flow. In the future, the actual MECs are likely to be lower because the two plants are unlikely to discharge maximum concentrations simultaneously.

The flow weighted MECs are less than the WQBELs, and therefore compliance is feasible, for copper (with and without the proposed SSO), lead, nickel, alpha-BHC, beta-BHC, endrin and tributyltin. In contrast, the flow weighted MECs exceed the WQBELS, and therefore compliance may be infeasible, for mercury, dioxin-TEQ, aldrin, 4,4-DDT, heptachlor, and heptachlor epoxide. Compliance schedules are granted for dioxin, aldrin, DDT, heptachlor and heptachlor epoxide. Others are subject to a Cease and Desist Order.

Regional Water Board staff concludes that compliance is feasible for cyanide. Although the flow-weighted average MEC may be somewhat greater than the limit, that MEC does not reflect conditions at the NBSU joint outfall, where cyanide compliance is to be determined. The data collected at the Sanitary and Industrial Plants may also reflect analytical interference during the cyanide tests due to chlorination. However, cyanide data exist for the NBSU outfall (which is after dechlorination and thus does not exhibit

the analytical challenges found at the Sanitary and Industrial Plant outfalls). There, the MEC is 8.5 ug/L, which is less than the new limits. Therefore, compliance is feasible.

**Table F-17 Feasibility to Comply**

| CTR | Pollutant | Calculated limits µg/l | | MEC µg/l | | | Feasible to comply? |
|---|---|---|---|---|---|---|---|
| | | AMEL | MDEL | Sanitary | Industrial | Weighted average flow | |
| 6 | Copper | 54 | 110 | 14 | 41 | 26 | Yes |
| 6 | Copper SSO | 42 | 84 | 14 | 41 | 26 | Yes |
| 7 | lead | 64 | 130 | 5 | 71 | 35 | Yes |
| 8 | Mercury | 0.020 | 0.041 | 0.087 | 0.034 | 0.063 | No |
| 9 | Nickel | 76 | 150 | 15 | 30 | 22 | Yes |
| 14 | Cyanide | 20 | 44 | 16 | 33 | 24 | Yes[2] |
| | | | | | | | |
| | Dioxin-TEQ | 1.4E-08 | 2.8E-08 | 3.6E-07[1] | 4.7E-07 | 4.1E-07 | No |
| 102 | Aldrin | 0.00014 | 0.00028 | 0.0090 | 0.005[1] | 0.0072 | No |
| 103 | alpha-BHC | 0.13 | 0.26 | 0.005[1] | 0.051 | 0.026 | Yes |
| 104 | Beta-BHC | 0.46 | 0.92 | 0.13 | 0.039 | 0.089 | Yes |
| 108 | 4,4-DDT | 0.00059 | 0.0012 | 0.053 | 0.01[1] | 0.034 | No |
| 109 | 4,4-DDE | 0.00059 | 0.0012 | 0.050 | 0.01[1] | 0.032 | No |
| 111 | Dieldrin | 0.00014 | 0.00028 | 0.014 | 0.01[1] | 0.012 | No |
| 115 | Endrin | 0.019 | 0.037 | 0.021 | 0.010 | 0.016 | Yes |
| 117 | Heptachlor | 0.002 | 0.0041 | 0.26 | 0.035 | 0.16 | No |
| 118 | Heptachlor Epoxide | 0.00089 | 0.0018 | 0.022 | 0.005 | 0.014 | No |
| | Ammonia | 120,000 | 320,000 | 118,000 | 6,900 | 68,000 | Yes |
| | Tributyltin | 0.061 | 0.12 | 0.019 | 0.0046 | 0.013 | Yes |

| Effluent Flow rates, MGD | Sanitary | Industrial | Total |
|---|---|---|---|
| Average | 0.8 | 0.65 | 1.45 |

[1] Nondetect reported; value shown is minimum method detection limit.
[2] Compliance is feasible because the MEC at the compliance point (the NBSU joint outfall) is 8.5 ug/l, which is less than the calculated limits.

### 2. Compliance Schedules

This Order establishes schedules for compliance with final effluent limitations for dioxin-TEQ, aldrin, 4,4-DDT, heptachlor, and heptachlor epoxide.

The compliance schedule for dioxin-TEQ extends until June 30, 2017, ten years from the effective date of this Order. This schedule is based on the Basin Plan, because this limit implements the Basin Plan's narrative bioaccumulation objective.

The compliance schedules for aldrin, 4,4-DDT, heptachlor, and heptachlor epoxide extend to May 18, 2010. These schedules are based on the CTR. Because these schedules extend beyond one year, pursuant to the SIP and 40 CFR 122.47, the Regional Water Board must establish interim numeric limitations, if feasible, and interim requirements to control these pollutants. Since compliance by May 18, 2010 is unlikely, and the Discharger will then threaten to violate the effluent limitations for these pollutants, a Cease and Desist Order for these pollutants has been proposed.

### 3. Interim Limits

Interim limits for pollutants with compliance schedules may be based on current performance or previous permit limits. A statistical analysis of current performance is not possible because no data exist for the new combined monitoring location and, in the case of the chlorinated pesticides and Dioxin-TEQ, there is insufficient data, because of non-detects, to calculate a performance limit.

Pursuant to 40 CFR 122.44(k)(3), where numerical limits are infeasible, best management practices may be required. Best Management Practices are required in VI.C.4 of the Order.

The SIP suggests that mass limitations should be established for bioaccumulative pollutants that have been included on the 303(d) list for the receiving water. Because mercury is bioaccumulative and is included in the 303(d) list for Lower San Francisco Bay, the previous Order (01-145) established a mass emission limit for mercury of 0.018 kilograms per month (kg/month). However, because compliance with WQBELs will be determined after combination of the treated effluent from both the Sanitary and Industrial Plants, the mass emission limitations for the Industrial Plant, established in the previous permit (R2-2002-0045) of 0.026 kg/month, is added to the limitation for the Sanitary Plant to derive the combined mass emission limitation of 0.044 kg/month.

## E. Summary of Final Effluent Limitations

1. Following, Table F-18, is a summary of the technology-based and water quality-based effluent limitations established by this Order. Except for cyanide and chlorine, samples are collected from discharge point 001. Cyanide and chlorine samples are collected from sampling point EFF-002..

**Table F-18. Summary of Effluent Limitations**

| Parameter | Units | Effluent Limitations | | | | |
|---|---|---|---|---|---|---|
| | | Average Monthly | Average Weekly | Maximum Daily | Instantaneous Minimum | Instantaneous Maximum |
| $CBOD_5$ | mg/l | 25 | 40 | -- | -- | -- |
| TSS | mg/l | 30 | 45 | -- | -- | -- |
| Oil and Grease | mg/l | 10 | -- | 20 | -- | -- |
| pH | s.u. | -- | -- | -- | 6.0 | 9.0 |
| Chlorine, Total Residual | mg/l | --- | --- | --- | --- | 0.0 |
| Copper (1) | µg/l | 54 | -- | 110 | -- | -- |
| Lead | µg/l | 64 | -- | 120 | -- | -- |
| Mercury | µg/l | 0.020 | -- | 0.041 | -- | -- |
| Nickel | µg/l | 76 | -- | 150 | -- | -- |
| Cyanide | µg/l | 20 | -- | 44 | -- | -- |
| Dioxin-TEQ | µg/l | $1.40 \times 10^{-8}$ | -- | $2.8 \times 10^{-8}$ | -- | -- |
| Aldrin | µg/l | 0.00014 | -- | 0.00028 | -- | -- |
| alpha-BHC | µg/l | 0.13 | -- | 0.26 | -- | -- |
| beta-BHC | µg/l | 0.46 | -- | 0.92 | -- | -- |
| 4,4-DDT | µg/l | 0.00059 | -- | 0.0012 | -- | -- |
| 4,4-DDE | µg/l | 0.00059 | -- | 0.0012 | -- | -- |
| Dieldrin | µg/l | 0.00014 | -- | 0.00028 | -- | -- |
| Endrin | µg/l | 0.019 | -- | 0.037 | -- | -- |
| Heptachlor | µg/l | 0.0020 | -- | 0.0041 | -- | -- |
| Heptachlor Epoxide | µg/l | 0.00089 | -- | 0.0018 | -- | -- |
| Ammonia | mg/l | 120 | | 310 | | |
| Tributyltin | µg/l | 0.061 | -- | 0.12 | -- | -- |

(1) Alternate Effluent Limitations for Copper:

a. If a copper SSO for the receiving water becomes legally effective, resulting in adjusted saltwater Criterion Continuous Concentration (CCC) of 2.5 µg/l and Criterion Maximum Concentration (CMC) of 3.9 µg/l as documented in the *North of Dumbarton Bridge Copper and Nickel Site-Specific Objective (SSO) Derivation (Clean Estuary Partnership December 2004)*, upon its effective date, the following limitations shall supersede those copper limitations listed in Table 6c.

AMEL of 42 µg/l, and MDEL of 84 µg/l.

b. If a different copper SSO for the receiving water is adopted, the alternate WQBELs based on the SSO will be determined after the SSO effective date.

The Discharger shall also comply with the following effluent limitations.

- **CBOD and TSS 85 Percent Removal:** The average monthly percent removal of CBOD and TSS shall not be less than 85 percent.

- **Fecal Coliform Bacteria:** The treated wastewater shall meet the following limitations of bacteriological quality.

  (1) The 5-day log mean fecal coliform density shall not exceed 200MPN/100ml; and

  (2) The 90$^{th}$ percentile value of the last 10 values shall not exceed 400 MPN/100 ml.

- **Enterococci Bacteria**: The monthly geometric mean enterococci bacteria density shall not exceed 35 MPN/100 ml.

- **Effluent Limitations for Toxic Pollutants**

- **Acute Toxicity:** The Discharger shall comply with the following limitations for whole effluent acute toxicity.

  **11 sample median:** A bioassay test showing survival of less than 90 percent represents a violation of this effluent limit, if five or more of the past 10 or fewer bioassay tests show less than 90 percent survival.

  **90th percentile**: A bioassay test showing survival of less than 70 percent represents a violation of this effluent limit, if one or more of the past ten or fewer bioassay tests show less than 70 percent survival.

- **Chronic Toxicity:** Basin Plan's narrative toxicity objective.

- **Mercury Mass Emission Limitation:** Until TMDL and Waste Load Allocation (WLA) efforts for mercury provide enough information to establish a different WQBEL, a mass emission of mercury shall not exceed 0.0041 kg/month.

### F. Land Discharge Specifications

Not Applicable

### G. Reclamation Specifications

Not Applicable

## V. RATIONALE FOR RECEIVING WATER LIMITATIONS

### A. Surface Water

Although the NBSU is responsible for the discharge to the receiving water, discharges from the Sanitary Plant could impact receiving waters. Therefore, receiving water limitations V.A.1 and V.A.2 (conditions to be avoided) are retained from the previous Order but edited to more closely reflect water quality objectives for the physical,

chemical, and biological characteristics of receiving waters established in Chapter III of the Basin Plan.

### B. Groundwater

Not Applicable

## VI. RATIONALE FOR MONITORING AND REPORTING REQUIREMENTS

The principal purposes of a monitoring program by a discharger are to:

- Document compliance with waste discharge requirements and prohibitions established by the Regional Water Board,
- Facilitate self-policing by the discharger in the prevention and abatement of pollution arising from waste discharge,
- Develop or assist in the development of limitations, discharge prohibitions, national standards of performance, pretreatment and toxicity standards, and other standards, and
- Prepare water and wastewater quality inventories.

The MRP is a standard requirement in almost all NPDES permits issued by the Regional Water Board, including this Order. It contains definitions of terms, specifies general sampling and analytical protocols, and sets out requirements for reporting of spills, violations, and routine monitoring data in accordance with NPDES regulations, the California Water Code, and Regional Water Board's policies. The MRP also defines the sampling stations and frequency, the pollutants to be monitored, and additional reporting requirements. Pollutants to be monitored include all parameters for which effluent limitations are specified. Monitoring for additional constituents, for which no effluent limitations are established, is also required to provide data for future completion of RPAs for them.

### A. Influent Monitoring

Influent monitoring requirements are unchanged and are retained from the previous Order. Periodic monitoring of $CBOD_5$ and TSS in influent allows determination of compliance with this Order's 85 percent removal requirement.

### B. Effluent Monitoring

This previous Order established two effluent monitoring locations, E-001 and E-002. Monitoring location E-001 represents effluent from the Sanitary Plant after chlorination but prior to discharge into the combined forcemain-outfall. Monitoring location E-002 represents any point in the NBSU combined outfall after dechlorination between the point of at which all waste tributary to the NBSU combined outfall is present. The previous Order required effluent monitoring for all constituents, except chlorine residual and

standard observations, at location E-001; monitoring for residual chlorine and standard observations were required at monitoring location E-002.

This Order adds a third monitoring location to represent the combined effluent from the Sanitary and Industrial Plants. The monitoring locations for this Order, including the new naming convention for the treatment plant outfalls, is configured as follows:

- Monitoring Location EFF-001. This location represents the former monitoring location E-001 from the previous Order. Monitoring for compliance with applicable technology-based effluent limitations and the mercury mass-emission limitation is required at this monitoring location.

- Monitoring Location EFF-001A. This new monitoring location represents the combined effluent from the SFIA Mel Long Treatment Plant (including treated effluent from both the Sanitary and Industrial Plants). Monitoring for compliance with all WQBELs will be required at this monitoring location (for both the Sanitary and Industrial Plants).

- Monitoring Location EFF-002. This location represents the former monitoring location E-002, at any point in the NBSU combined outfall after dechlorination.

The MRP retains effluent monitoring frequency and sample type requirements from the previous Order for flow rate, $CBOD_5$, TSS, fecal coliform bacteria, oil and grease, pH, total residual chlorine, acute and chronic toxicity, dissolved oxygen, temperature, toxic metals and organics, tributyltin, and standard observations. The following bulleted text highlights differences in monitoring requirements between the previous Order and the tentative Order.

- Routine monitoring for compliance with effluent limitations for settleable solids, zinc, 4,4-DDD and bis (2-ethylhexyl) phthalate is no longer required as the effluent limitations for these pollutants have not been retained from the previous Order.

- Twice per month monitoring for enterococci bacteria using a grab sample has been added to monitor for compliance with the new effluent limitations.

- This Order requires routine monitoring only for those toxic pollutants that have effluent limitations established by this Order. Monitoring for all other toxic, priority pollutants must be conducted according to procedures and schedules established by the Regional Water Board's letter of August 6, 2001 to Permitted Wastewater Dischargers regarding Requirement for Monitoring Pollutants in Effluent and Receiving Water to Implement New Statewide Regulations and Policy.

- The monitoring location for compliance with WQBELs has been moved to new monitoring location, EFF-001A, representing the total effluent flow from the SFIA Mel Leong Treatment Plant (including flow from both the Sanitary Plant and the Industrial Plant). It should be noted that samples taken at Monitoring Location EFF-001A, and the resulting data, can be used for reporting compliance with

WQBELs established in this Order for the Sanitary Plant and may be applicable also to an Order established for the Industrial Plant.

- This Order requires monitoring for total residual chlorine with an EPA approved method that will "achieve a method detection limit (MDL) at least as low as that achieved by the Amperometric Titration Method (4500-Cl D from Standard Methods for Examination of Water and Wastewater, Edition 20)." The Regional Water Board considers this method to be the least sensitive to interferences from color, turbidity, iron, manganese, and nitrite nitrogen, and capable of consistently achieving an MDL of less than 0.1 mg/l.

## C. Whole Effluent Toxicity Testing Requirements

1. **Acute Toxicity.** Monthly 96-hour bioassay testing is required to demonstrate compliance with the effluent limitation for acute toxicity.

2. **Chronic Toxicity.** Chronic whole effluent toxicity testing is required two times per year in order to demonstrate compliance with the Basin Plan's narrative toxicity objective.

## D. Receiving Water Monitoring

### 1. Regional Monitoring Program

On April 15, 1992, the Regional Water Board adopted Resolution No. 92-043 directing the Executive Officer to implement the Regional Monitoring Program (RMP) for the San Francisco Bay. Subsequent to a public hearing and various meetings, Regional Water Board staff requested major permit holders in this region, under authority of section 13267 of California Water Code, to report on the water quality of the estuary. These permit holders responded to this request by participating in a collaborative effort, through the San Francisco Estuary Institute. This effort has come to be known as the San Francisco Bay Regional Monitoring Program for Trace Substances. This Order specifies that the Discharger shall continue to participate in the RMP, which involves collection of data on pollutants and toxicity in water, sediment and biota of the estuary.

**2.** Certain receiving water limited parameters are not monitored by the RMP or are not monitored close enough to the Discharger's outfall to assure compliance with Receiving Water limits. This annual assessment is not burdensome and will assure compliance with limits.

## E. Other Monitoring Requirements

### 1. Bypasses or Sewer Overflow Monitoring

The MRP includes new monitoring requirements to record observations related to bypasses or sanitary sewer overflows.

### 2. Sludge Monitoring

The Discharger is required to adhere to sludge monitoring requirements required by 40 CFR Part 503.

## VII. RATIONALE FOR PROVISIONS

### A. Standard Provisions (Provision VI.A)

Standard Provisions, which in accordance with 40 CFR §§122.41 and 122.42 apply to all NPDES discharges and must be included in every NPDES permit, are provided in **Attachments D and H** of this Order.

### B. Monitoring and Reporting Requirements (Provision VI.B)

The Discharger is required to conduct monitoring of the permitted discharges in order to evaluate compliance with permit conditions. Monitoring requirements are contained in the MRP (**Attachment E**), Standard Provisions and SMP, Part A (**Attachment G)** of the Permit. This provision requires compliance with these documents and is based on 40 CFR 122.63. The Standard Provisions and SMP, Part A are standard requirements in almost all NPDES permits issued by the Regional Water Board, including this Order. They contain definitions of terms, specify general sampling and analytical protocols, and set out requirements for reporting of spills, violations, and routine monitoring data in accordance with NPDES regulations, the CWC, and Regional Water Board's policies. The MRP contains a sampling program specific for the facility. It defines the sampling stations and frequency, the pollutants to be monitored, and additional reporting requirements. Pollutants to be monitored include all parameters for which effluent limitations are specified. Monitoring for additional constituents, for which no effluent limitations are established, is also required to provide data for future completion of RPAs for them.

### C. Special Provisions (Provision VI.C)

#### 1. Reopener Provisions

These provisions are based on 40 CFR Part 123 and allow future modification of this Order and its effluent limitations as necessary in response to updated WQOs that may be established in the future.

#### 2. Special Studies and Additional Monitoring Requirements

a. Effluent Characterization Study. This Order does not include effluent limitations for the selected constituents addressed in the August 6, 2001 letter that do not demonstrate reasonable potential, but this provision requires the Discharger to continue monitoring for these pollutants as described in the August 6, 2001 letter and as specified in the MRP of this Order. If concentrations of these constituents increase significantly, the Discharger will be required to investigate the source of the increases and establish remedial measures if the increases result in

reasonable potential to cause or contribute to an excursion above the applicable WQO/WQC. This provision is based on the Basin Plan and the SIP.

b. Ambient Background Receiving Water Study. This provision is based on the Basin Plan, the SIP, and the August 6, 2001 letter for priority pollutant monitoring. As indicated in the Order, this requirement may be met by participating in the collaborative BACWA study.

c. Optional Mass Offset Plan. This option is provided to encourage the Discharger to further implement aggressive reduction of mass loads to Lower San Francisco Bay. If the Discharger wishes to pursue a mass offset program, a mass offset plan for reducing 303(d) listed pollutants to the same receiving water body needs to be submitted for Regional Water Board approval. The Regional Water Board will consider any proposed mass offset plan and amend this Order accordingly.

**3. Best Management Practices and Pollution Minimization Program**

This provision is based on Chapter 4 of the Basin Plan and Sections 2.2.1 and 2.4.5 of the SIP.

**4. Requirement to Assure Compliance Schedules with Final Limits**

This provision is based on the Basin Plan (Section 4.7.6 Compliance Schedules) and 40 CFR 122.47(a)(3). Maximum allowable compliance schedules are granted to the Discharger for dioxin-TEQ, aldrin, 4,4-DDT, heptachlor and heptachlor expoxide because of the considerable uncertainty in determining an effective measure such as pollution prevention and treatment plant upgrades that should be implemented to ensure compliance with final limits. It is appropriate to allow the Discharger sufficient time to first explore source control measures before requiring it to propose further actions, such as treatment plant upgrades that are likely to be much more costly. This approach is supported by the Basin Plan (Section 4.13 Pretreatment and Pollution Prevention), which states: “In general, it is often more economical to reduce overall pollutant loading into treatment systems than to install complex and expensive technology at the plant.” Finally, because of the ubiquitous nature of the sources of dioxin-TEQ, this provision also allows the Discharger to address compliance with calculated WQBELs through other strategies such as mass offset.

**5. Construction, Operation, and Maintenance Specifications**

a. Wastewater Facilities, Review and Evaluation, Status Reports: This provision is based on the previous Order and the Basin Plan. See Section VI.C.5.a of this Order for specific requirements.

b. Operations and Maintenance Manual, Review and Status Reports: This provision is based on the Basin Plan, the requirements of 40 CFR §122, and the previous Order. See Section VI.C.5.b of this Order for specific requirements.

c. Contingency Plan, Review and Status Reports: This provision is based on the Basin Plan, the requirements of 40 CFR §122, and the previous Order. See Section VI.C.5.c of this Order for specific requirements.

**6. Special Provisions for Municipal Facilities (POTWs Only)**

a. Sludge Management Practice Requirements: This provision is based on the Basin Plan (Chapter 4) and 40 CFR Parts 257 and 503.

b. Sanitary Sewer Overflows and Sewer System Management Plan: This provision is to explain this Order's requirements as they relate to the Discharger's conveyance system, and to promote consistency with the State Water Resources Control Board adopted Statewide General Waste Discharge Requirements for Sanitary Sewer Overflow (SSO WDRs) and a related Monitoring and Reporting Program (Order No. 2006-0003-DWQ). See Section VI.C.6.b of this Order for specific requirements.

**7. Other Special Provisions**

**a. Cyanide Action Plan**

The proposed cyanide site-specific objectives, if approved, will require action plans for source control. Implementation of a similar action plan for cyanide at this time would ensure that any increase in cyanide limits would be consistent limits expected with the site-specific objectives. Therefore, the antidegradation analysis prepared for the site-specific objectives could also apply to these limits, which would therefore comply with antidegradation policies (i.e., increasing the limits would not degrade the quality of the receiving water).

**b. Copper Action Plan**

The copper SSO Basin Plan Amendment, if approved, will require action plans for source control. Implementation of an action plan for copper is necessary to ensure that any increase in copper limits would be consistent with antidegradation policies (i.e., increasing the limits would not degrade the quality of the receiving water)

## VIII. PUBLIC PARTICIPATION

The California Regional Water Quality Control Board, San Francisco Bay Region, is considering the issuance of waste discharge requirements (WDRs) that will serve as a National Pollutant Discharge Elimination System (NPDES) permit for San Francisco International Airport, Mel Leong Treatment Plant, Sanitary Plant. As a step in the WDR adoption process, the Regional Water Board staff has developed tentative WDRs. The Regional Water Board encourages public participation in the WDR adoption process.

## A. Notification of Interested Parties

The Regional Water Board has notified the Dischargers and interested agencies and persons of its intent to prescribe WDRs for the discharge and has provided them with an opportunity to submit their written comments and recommendations. Notification was provided through a public notice in the San Mateo Times on, or around, June 11, 2007.

## B. Written Comments

The staff determinations are tentative. Interested persons were invited to submit written comments concerning these tentative WDRs. Comments were to be submitted either in person or by mail to the Executive Officer at the Regional Water Board at the address above on the cover page of this Order.

To be fully responded to by staff and considered by the Regional Water Board, written comments had to be received at the Regional Water Board offices by 5:00 p.m. on Friday, July 11, 2007**.**

## C. Public Hearing

The Regional Water Board will hold a public hearing on the tentative WDRs during its regular Board meeting on the following date and time and at the following location:

Date: August 8, 2007
Time: 9:00 AM
Location: Elihu Harris State Office Building
1515 Clay Street, 1st Floor Auditorium
Oakland, CA 94612

Contact: Derek Whitworth**,** (510) 622-2349, email DWhitworth@waterboards.ca.gov

Interested persons are invited to attend. At the public hearing, the Regional Water Board will hear testimony, if any, pertinent to the discharge, WDRs, and permit. Oral testimony will be heard; however, for accuracy of the record, important testimony should be in writing.

Please be aware that dates and venues may change. Our Web address is http://www.waterboards.ca.gov/sanfranciscobay where you can access the current agenda for changes in dates and locations.

## D. Waste Discharge Requirements Petitions

Any aggrieved person may petition the State Water Resources Control Board to review the decision of the Regional Water Board regarding the final WDRs. The petition must be submitted within 30 days of the Regional Water Board's action to the following address:

State Water Resources Control Board
Office of Chief Counsel
P.O. Box 100, 1001 I Street
Sacramento, CA 95812-0100

## E. Information and Copying

The Report of Waste Discharge (RWD), related documents, tentative effluent limitations and special provisions, comments received, and other information are on file and may be inspected at the address above at any time between 8:30 a.m. and 4:45 p.m., Monday through Friday. Copying of documents may be arranged through the Regional Water Board by calling 510-622-2300.

## F. Register of Interested Persons

Any person interested in being placed on the mailing list for information regarding the WDRs and NPDES permit should contact the Regional Water Board, reference this facility, and provide a name, address, and phone number.

## G. Additional Information

Requests for additional information or questions regarding this Order should be directed to Derek Whitworth at 510-622-2349 (email at DWhitworth@waterboards.ca.gov).

## APPENDIX A

## RPA CALCULATIONS - INDUSTRIAL TREATMENT PLANT DATA

**Table 1** **Criteria** **(Table 1 in RPA spreadsheet)**
**Table 2** **Data Input for RPA** **(Table 2 in RPA spreadsheet)**
**Table 3** **Reasonable Potential Analysis Results** **(Table 3 in RPA spreadsheet)**
**Table 4** **Salinity and Hardness Data** **(Table 6 in RPA spreadsheet)**
**Table 5** **Dioxin-TEQ Data** **(Table 8 in RPA spreadsheet)**
**Table 6** **Total Metals – electronic version only** **(Table 9 in RPA spreadsheet)**
**Table 7** **Ammonia-Nitrogen Levels, Monthly average May 2005 – April 2007**

# SFIA Mel Leong WQCP
## Industrial Plant
## Table 1. Criteria

**Is it a RB2 facility (Y/N)?** Y
**Hardness (mg/L CaCO3)** 400 — For Cd, Cr(III), Cu, Pb, Ni, Ag, Zn in freshwater
**pH (s.u.)** 7.9

Note: DO NOT enter any value for the column that is NOT applicable
Note: Numbers in blue have formula in the cells - calculates values automatically
Note: Criteria for metals are expressed as total recoverable metal

| | | | Most Stringent Criteria | | | Basin Plan Criteria | | | | | | | | | | CTR Water Quality Criteria (ug/L) | | | | | | Factors for Metals Freshwater Criteria | | | | Conversion Factor (CF) | | | | Site-Specific | |
|---|---|---|---|---|---|---|---|---|---|---|---|---|---|---|---|---|---|---|---|---|---|---|---|---|---|---|---|---|---|---|---|---|
| | | | | | | from Table 4-3 | | Freshwater (from Table 3-4) | | | | Saltwater (from Table 3-3) | | | | Freshwater | | Saltwater | | Human Health for consumption of: | | | | | | | | | | | | | |
| # in CTR | PRIORITY POLLUTANTS | Lowest (most stringent) Criteria | Human Health Criterion | Lowest Chronic Criterion | Lowest Acute Criterion | Shallow Water | Deep Water (24-hr) | 4-day | 1-hr | 24-hr | Inst. Max | 4-day | 1-hr | 24-hr | Inst. Max | CMC (acute) | CCC (chronic) | CMC (acute) | CCC (chronic) | Water & organisms | Organisms only | ma | ba | mc | bc | freshwater acute criteria (MDEL) | freshwater chronic criteria (AMEL) | saltwater acute criteria (MDEL) | saltwater chronic criteria (AMEL) | Acute | Chronic |
| | | ug/L | ug/L | ug/L | ug/L | ug/L | ug/L | ug/L | ug/L | ug/L | ug/L | ug/L | ug/L | ug/L | ug/L | ug/L | ug/L | ug/L | ug/L | ug/L | ug/L | | | | | | | | | | |
| 1 | Antimony | 4300 | 4,300 | | | | | | | | | | | | | | | | | | 4,300 | | | | | | | | | | |
| 2 | Arsenic | 36 | | 36.00000 | 69.00000 | | | | | | | 36 | 69 | | | | | 69 | 36 | | | | | | | 1 | 1 | 1 | 1 | | |
| 3 | Beryllium | No Criteria | | | | | | | | | | | | | | | | | | | | | | | | | | | | | |
| 4 | Cadmium | 9.4 | | 9.35614 | 42.25352 | | | | | | | 9.4 | 42 | | | | | 42 | 9.4 | | | 1.128 | -3.6867 | 0.7852 | -2.715 | 0.886 | 0.851 | 0.994 | 0.994 | | |
| 5a | Chromium (III) | No Criteria | | | | | | | | | | | | | | | | | | | | 0.8190 | 3.6880 | 0.8190 | 1.5610 | 0.316 | 0.86 | | | | |
| 5b | Chromium (VI) | 50.4 | | 50.35247 | 1107.75428 | | | | | | | 50 | 1,108 | | | | | 1,108 | 50 | | | | | | | 0.982 | 0.962 | 0.993 | 0.993 | | |
| 6 | Copper | 4.2 | | 4.18919 | 5.45455 | | | | | | | 4.2 | 5.5 | | | | | 5.5 | 4.2 | | | 0.9422 | -1.7000 | 0.8545 | -1.7020 | 0.96 | 0.96 | 0.83 | 0.83 | 0.88 | 0.74 |
| 7 | Lead | 8.5 | | 8.51735 | 220.82019 | | | | | | | 8.5 | 221 | | | | | 221 | 8.5 | | | 1.2730 | -1.4600 | 1.2730 | -4.7050 | 0.589 | 0.589 | 0.951 | 0.951 | | |
| 8 | Mercury (303d listed) | 0.025 | 0.05 | 0.02500 | 2.10000 | | | | | | | 0.025 | 2.1 | | | | | | | | 0.051 | | | | | | | | | | |
| 9 | Nickel (303d listed) | 12.6 | 4,600 | 12.61538 | 87.05882 | | | | | | | 13 | 87 | | | | | 87 | 13 | | 4,600 | 0.8460 | 2.2550 | 0.8460 | 0.0584 | 0.998 | 0.997 | 0.99 | 0.99 | 0.85 | 0.65 |
| 10 | Selenium | 5 | | 5.00000 | 20.00000 | | | | | | | | | | | | | 20 | 5 | | | | | | | | | 0.998 | 0.88 | | |
| 11 | Silver | 2.2 | | | 2.23529 | | | | | | | | 2.2 | | | | | 2.2 | | | | 1.7200 | -6.5200 | | | 0.85 | | 0.85 | | | |
| 12 | Thallium | 6.3 | 6.30000 | | | | | | | | | | | | | | | | | | 6.3 | | | | | | | | | | |
| 13 | Zinc | 85.6 | | 85.62368 | 95.13742 | | | | | | | 86 | 95 | | | | | 95 | 86 | | | 0.8473 | 0.8840 | 0.8473 | 0.8840 | 0.978 | 0.986 | 0.946 | 0.946 | | |
| 14 | Cyanide | 1 | 220,000 | 1.00000 | 1.00000 | | | | | | | | | | | | | 1.0 | 1.0 | | 220,000 | | | | | | | | | | |
| 15 | Asbestos | No Criteria | | | | | | | | | | | | | | | | | | | | | | | | | | | | | |
| 16 | 2,3,7,8-TCDD (Dioxin) (303d listed) | 0.000000014 | 0.000000014 | | | | | | | | | | | | | | | | | | 0.000000014 | | | | | | | | | | |
| 16-TEQ | Dioxin TEQ (303d listed) | 0.000000014 | 0.000000014 | | | | | | | | | | | | | | | | | | 0.000000014 | | | | | | | | | | |
| 17 | Acrolein | 780 | 780 | | | | | | | | | | | | | | | | | | 780 | | | | | | | | | | |
| 18 | Acrylonitrile | 0.66 | 0.66000 | | | | | | | | | | | | | | | | | | 0.66 | | | | | | | | | | |
| 19 | Benzene | 71 | 71 | | | | | | | | | | | | | | | | | | 71 | | | | | | | | | | |
| 20 | Bromoform | 360 | 360 | | | | | | | | | | | | | | | | | | 360 | | | | | | | | | | |
| 21 | Carbon Tetrachloride | 4.4 | 4,40000 | | | | | | | | | | | | | | | | | | 4.4 | | | | | | | | | | |
| 22 | Chlorobenzene | 21000 | 21,000 | | | | | | | | | | | | | | | | | | 21,000 | | | | | | | | | | |
| 23 | Chlorodibromomethane | 34 | 34 | | | | | | | | | | | | | | | | | | 34 | | | | | | | | | | |
| 24 | Chloroethane | No Criteria | | | | | | | | | | | | | | | | | | | | | | | | | | | | | |
| 25 | 2-Chloroethylvinyl Ether | No Criteria | | | | | | | | | | | | | | | | | | | | | | | | | | | | | |
| 26 | Chloroform | No Criteria | | | | | | | | | | | | | | | | | | | | | | | | | | | | | |
| 27 | Dichlorobromomethane | 46 | 46 | | | | | | | | | | | | | | | | | | 46 | | | | | | | | | | |
| 28 | 1,1-Dichloroethane | No Criteria | | | | | | | | | | | | | | | | | | | | | | | | | | | | | |
| 29 | 1,2-Dichloroethane | 99 | 99 | | | | | | | | | | | | | | | | | | 99 | | | | | | | | | | |
| 30 | 1,1-Dichloroethylene | 3.2 | 3.20000 | | | | | | | | | | | | | | | | | | 3.2 | | | | | | | | | | |
| 31 | 1,2-Dichloropropane | 39 | 39 | | | | | | | | | | | | | | | | | | 39 | | | | | | | | | | |
| 32 | 1,3-Dichloropropylene | 1700 | 1,700 | | | | | | | | | | | | | | | | | | 1,700 | | | | | | | | | | |
| 33 | Ethylbenzene | 29000 | 29,000 | | | | | | | | | | | | | | | | | | 29,000 | | | | | | | | | | |
| 34 | Methyl Bromide | 4000 | 4,000 | | | | | | | | | | | | | | | | | | 4,000 | | | | | | | | | | |
| 35 | Methyl Chloride | No Criteria | | | | | | | | | | | | | | | | | | | | | | | | | | | | | |
| 36 | Methylene Chloride | 1600 | 1,600 | | | | | | | | | | | | | | | | | | 1,600 | | | | | | | | | | |
| 37 | 1,1,2,2-Tetrachloroethane | 11 | 11 | | | | | | | | | | | | | | | | | | 11 | | | | | | | | | | |
| 38 | Tetrachloroethylene | 8.85 | 8.85000 | | | | | | | | | | | | | | | | | | 8.85 | | | | | | | | | | |
| 39 | Toluene | 200000 | 200,000 | | | | | | | | | | | | | | | | | | 200,000 | | | | | | | | | | |
| 40 | 1,2-Trans-Dichloroethylene | 140000 | 140,000 | | | | | | | | | | | | | | | | | | 140,000 | | | | | | | | | | |
| 41 | 1,1,1-Trichloroethane | No Criteria | | | | | | | | | | | | | | | | | | | | | | | | | | | | | |
| 42 | 1,1,2-Trichloroethane | 42 | 42 | | | | | | | | | | | | | | | | | | 42 | | | | | | | | | | |
| 43 | Trichloroethylene | 81 | 81 | | | | | | | | | | | | | | | | | | 81 | | | | | | | | | | |
| 44 | Vinyl Chloride | 525 | 525 | | | | | | | | | | | | | | | | | | 525 | | | | | | | | | | |
| 45 | 2-Chlorophenol | 400 | 400 | | | | | | | | | | | | | | | | | | 400 | | | | | | | | | | |
| 46 | 2,4-Dichlorophenol | 790 | 790 | | | | | | | | | | | | | | | | | | 790 | | | | | | | | | | |
| 47 | 2,4-Dimethylphenol | 2300 | 2,300 | | | | | | | | | | | | | | | | | | 2,300 | | | | | | | | | | |
| 48 | 2-Methyl-4,6-Dinitrophenol | 765 | 765 | | | | | | | | | | | | | | | | | | 765 | | | | | | | | | | |
| 49 | 2,4-Dinitrophenol | 14000 | 14,000 | | | | | | | | | | | | | | | | | | 14,000 | | | | | | | | | | |
| 50 | 2-Nitrophenol | No Criteria | | | | | | | | | | | | | | | | | | | | | | | | | | | | | |
| 51 | 4-Nitrophenol | No Criteria | | | | | | | | | | | | | | | | | | | | | | | | | | | | | |
| 52 | 3-Methyl-4-Chlorophenol | No Criteria | | | | | | | | | | | | | | | | | | | | | | | | | | | | | |
| 53 | Pentachlorophenol | 7.9 | 8.20000 | 7.90000 | 13.00000 | | | | | | | | | | | | | 13 | 7.9 | | 8.2 | | | | | | | | | | |
| 54 | Phenol | 4600000 | 4,600,000 | | | | | | | | | | | | | | | | | | 4,600,000 | | | | | | | | | | |
| 55 | 2,4,6-Trichlorophenol | 6.5 | 6.50000 | | | | | | | | | | | | | | | | | | 6.5 | | | | | | | | | | |
| 56 | Acenaphthene | 2700 | 2,700 | | | | | | | | | | | | | | | | | | 2,700 | | | | | | | | | | |
| 57 | Acenaphthylene | No Criteria | | | | | | | | | | | | | | | | | | | | | | | | | | | | | |
| 58 | Anthracene | 110000 | 110,000 | | | | | | | | | | | | | | | | | | 110,000 | | | | | | | | | | |
| 59 | Benzidine | 0.00054 | 0.00054 | | | | | | | | | | | | | | | | | | 0.00054 | | | | | | | | | | |
| 60 | Benzo(a)Anthracene | 0.049 | 0.04900 | | | | | | | | | | | | | | | | | | 0.049 | | | | | | | | | | |
| 61 | Benzo(a)Pyrene | 0.049 | 0.04900 | | | | | | | | | | | | | | | | | | 0.049 | | | | | | | | | | |
| 62 | Benzo(b)Fluoranthene | 0.049 | 0.04900 | | | | | | | | | | | | | | | | | | 0.049 | | | | | | | | | | |

# SFIA Mel Leong WQCP
## Industrial Plant
## Table 1. Criteria

| | | | Most Stringent Criteria | | | Basin Plan Criteria | | | | | | | | | | CTR Water Quality Criteria (ug/L) | | | | | | | | | | | | | | | |
|---|---|---|---|---|---|---|---|---|---|---|---|---|---|---|---|---|---|---|---|---|---|---|---|---|---|---|---|---|---|---|---|
| | | | | | | from Table 4-3 | | Freshwater (from Table 3-4) | | | | Saltwater (from Table 3-3) | | | | Freshwater | | Saltwater | | Human Health for consumption of: | | Factors for Metals Freshwater Criteria | | | | Conversion Factor (CF) | | | | Site-Specific | |
| # in CTR | PRIORITY POLLUTANTS | Lowest (most stringent) Criteria | Human Health Criterion | Lowest Chronic Criterion | Lowest Acute Criterion | Shallow Water | Deep Water (24-hr) | 4-day | 1-hr | 24-hr | Inst. Max | 4-day | 1-hr | 24-hr | Inst. Max | CMC (acute) | CCC (chronic) | CMC (acute) | CCC (chronic) | Water & organisms | Organisms only | ma | ba | mc | bc | freshwater acute criteria (MDEL) | freshwater chronic criteria (AMEL) | saltwater acute criteria (MDEL) | saltwater chronic criteria (AMEL) | Acute | Chronic |
| | | ug/L | ug/L | ug/L | ug/L | ug/L | ug/L | ug/L | ug/L | ug/L | ug/L | ug/L | ug/L | ug/L | ug/L | ug/L | ug/L | ug/L | ug/L | ug/L | ug/L | | | | | | | | | | |
| 63 | Benzo(ghi)Perylene | No Criteria | | | | | | | | | | | | | | | | | | | | | | | | | | | | | |
| 64 | Benzo(k)Fluoranthene | 0.049 | 0.04900 | | | | | | | | | | | | | | | | | | 0.049 | | | | | | | | | | |
| 65 | Bis(2-Chloroethoxy)Methane | No Criteria | | | | | | | | | | | | | | | | | | | | | | | | | | | | | |
| 66 | Bis(2-Chloroethyl)Ether | 1.4 | 1.40000 | | | | | | | | | | | | | | | | | | 1.4 | | | | | | | | | | |
| 67 | Bis(2-Chloroisopropyl)Ether | 170000 | 170,000 | | | | | | | | | | | | | | | | | | 170,000 | | | | | | | | | | |
| 68 | Bis(2-Ethylhexyl)Phthalate | 5.9 | 5.90000 | | | | | | | | | | | | | | | | | | 5.9 | | | | | | | | | | |
| 69 | 4-Bromophenyl Phenyl Ether | No Criteria | | | | | | | | | | | | | | | | | | | | | | | | | | | | | |
| 70 | Butylbenzyl Phthalate | 5200 | 5,200 | | | | | | | | | | | | | | | | | | 5,200 | | | | | | | | | | |
| 71 | 2-Chloronaphthalene | 4300 | 4,300 | | | | | | | | | | | | | | | | | | 4,300 | | | | | | | | | | |
| 72 | 4-Chlorophenyl Phenyl Ether | No Criteria | | | | | | | | | | | | | | | | | | | | | | | | | | | | | |
| 73 | Chrysene | 0.049 | 0.04900 | | | | | | | | | | | | | | | | | | 0.049 | | | | | | | | | | |
| 74 | Dibenzo(a,h)Anthracene | 0.049 | 0.04900 | | | | | | | | | | | | | | | | | | 0.049 | | | | | | | | | | |
| 75 | 1,2-Dichlorobenzene | 17000 | 17,000 | | | | | | | | | | | | | | | | | | 17,000 | | | | | | | | | | |
| 76 | 1,3-Dichlorobenzene | 2600 | 2,600 | | | | | | | | | | | | | | | | | | 2,600 | | | | | | | | | | |
| 77 | 1,4-Dichlorobenzene | 2600 | 2,600 | | | | | | | | | | | | | | | | | | 2,600 | | | | | | | | | | |
| 78 | 3,3-Dichlorobenzidine | 0.077 | 0.07700 | | | | | | | | | | | | | | | | | | 0.077 | | | | | | | | | | |
| 79 | Diethyl Phthalate | 120000 | 120,000 | | | | | | | | | | | | | | | | | | 120,000 | | | | | | | | | | |
| 80 | Dimethyl Phthalate | 2900000 | 2,900,000 | | | | | | | | | | | | | | | | | | 2,900,000 | | | | | | | | | | |
| 81 | Di-n-Butyl Phthalate | 12000 | 12,000 | | | | | | | | | | | | | | | | | | 12,000 | | | | | | | | | | |
| 82 | 2,4-Dinitrotoluene | 9.1 | 9.10000 | | | | | | | | | | | | | | | | | | 9.1 | | | | | | | | | | |
| 83 | 2,6-Dinitrotoluene | No Criteria | | | | | | | | | | | | | | | | | | | | | | | | | | | | | |
| 84 | Di-n-Octyl Phthalate | No Criteria | | | | | | | | | | | | | | | | | | | | | | | | | | | | | |
| 85 | 1,2-Diphenylhydrazine | 0.54 | 0.54000 | | | | | | | | | | | | | | | | | | 0.54 | | | | | | | | | | |
| 86 | Fluoranthene | 370 | 370 | | | | | | | | | | | | | | | | | | 370 | | | | | | | | | | |
| 87 | Fluorene | 14000 | 14,000 | | | | | | | | | | | | | | | | | | 14,000 | | | | | | | | | | |
| 88 | Hexachlorobenzene | 0.00077 | 0.00077 | | | | | | | | | | | | | | | | | | 0.00077 | | | | | | | | | | |
| 89 | Hexachlorobutadiene | 50 | 50 | | | | | | | | | | | | | | | | | | 50 | | | | | | | | | | |
| 90 | Hexachlorocyclopentadiene | 17000 | 17,000 | | | | | | | | | | | | | | | | | | 17,000 | | | | | | | | | | |
| 91 | Hexachloroethane | 8.9 | 8.90000 | | | | | | | | | | | | | | | | | | 8.9 | | | | | | | | | | |
| 92 | Indeno(1,2,3-cd) Pyrene | 0.049 | 0.04900 | | | | | | | | | | | | | | | | | | 0.049 | | | | | | | | | | |
| 93 | Isophorone | 600 | 600 | | | | | | | | | | | | | | | | | | 600 | | | | | | | | | | |
| 94 | Naphthalene | No Criteria | | | | | | | | | | | | | | | | | | | | | | | | | | | | | |
| 95 | Nitrobenzene | 1900 | 1,900 | | | | | | | | | | | | | | | | | | 1,900 | | | | | | | | | | |
| 96 | N-Nitrosodimethylamine | 8.1 | 8.10000 | | | | | | | | | | | | | | | | | | 8.1 | | | | | | | | | | |
| 97 | N-Nitrosodi-n-Propylamine | 1.4 | 1.40000 | | | | | | | | | | | | | | | | | | 1.4 | | | | | | | | | | |
| 98 | N-Nitrosodiphenylamine | 16 | 16 | | | | | | | | | | | | | | | | | | 16 | | | | | | | | | | |
| 99 | Phenanthrene | No Criteria | | | | | | | | | | | | | | | | | | | | | | | | | | | | | |
| 100 | Pyrene | 11000 | 11,000 | | | | | | | | | | | | | | | | | | 11,000 | | | | | | | | | | |
| 101 | 1,2,4-Trichlorobenzene | No Criteria | | | | | | | | | | | | | | | | | | | | | | | | | | | | | |
| 102 | Aldrin | 0.00014 | 0.00014 | | 1.30000 | | | | | | | | | | | | | 1.3 | | | 0.00014 | | | | | | | | | | |
| 103 | alpha-BHC | 0.013 | 0.01300 | | | | | | | | | | | | | | | | | | 0.013 | | | | | | | | | | |
| 104 | beta-BHC | 0.046 | 0.04600 | | | | | | | | | | | | | | | | | | 0.046 | | | | | | | | | | |
| 105 | gamma-BHC | 0.063 | 0.06300 | | 0.16000 | | | | | | | | | | | | | 0.16 | | | 0.063 | | | | | | | | | | |
| 106 | delta-BHC | No Criteria | | | | | | | | | | | | | | | | | | | | | | | | | | | | | |
| 107 | Chlordane (303d listed) | 0.00059 | 0.00059 | 0.00400 | 0.09000 | | | | | | | | | | | | | 0.09 | 0.004 | | 0.00059 | | | | | | | | | | |
| 108 | 4,4-DDT (303d listed) | 0.00059 | 0.00059 | 0.00100 | 0.13000 | | | | | | | | | | | | | 0.13 | 0.001 | | 0.00059 | | | | | | | | | | |
| 109 | 4,4-DDE | 0.00059 | 0.00059 | | | | | | | | | | | | | | | | | | 0.00059 | | | | | | | | | | |
| 110 | 4,4-DDD | 0.00084 | 0.00084 | | | | | | | | | | | | | | | | | | 0.00084 | | | | | | | | | | |
| 111 | Dieldrin (303d listed) | 0.00014 | 0.00014 | 0.00190 | 0.71000 | | | | | | | | | | | | | 0.71 | 0.0019 | | 0.00014 | | | | | | | | | | |
| 112 | alpha-Endosulfan | 0.0087 | 240 | 0.00870 | 0.03400 | | | | | | | | | | | | | 0.034 | 0.0087 | | 240 | | | | | | | | | | |
| 113 | beta-Endosulfan | 0.0087 | 240 | 0.00870 | 0.03400 | | | | | | | | | | | | | 0.034 | 0.0087 | | 240 | | | | | | | | | | |
| 114 | Endosulfan Sulfate | 240 | 240 | | | | | | | | | | | | | | | | | | 240 | | | | | | | | | | |
| 115 | Endrin | 0.0023 | 0.81000 | 0.00230 | 0.03700 | | | | | | | | | | | | | 0.037 | 0.0023 | | 0.81 | | | | | | | | | | |
| 116 | Endrin Aldehyde | 0.81 | 0.81000 | | | | | | | | | | | | | | | | | | 0.81 | | | | | | | | | | |
| 117 | Heptachlor | 0.00021 | 0.00021 | 0.00360 | 0.05300 | | | | | | | | | | | | | 0.053 | 0.0036 | | 0.00021 | | | | | | | | | | |
| 118 | Heptachlor Epoxide | 0.00011 | 0.00011 | 0.00360 | 0.05300 | | | | | | | | | | | | | 0.053 | 0.0036 | | 0.00011 | | | | | | | | | | |
| 119-125 | PCBs sum (303d listed) | 0.00017 | 0.00017 | 0.03000 | | | | | | | | | | | | | | | 0.03 | | 0.00017 | | | | | | | | | | |
| 126 | Toxaphene | 0.0002 | 0.00075 | 0.00020 | 0.21000 | | | | | | | | | | | | | 0.21 | 0.0002 | | 0.00075 | | | | | | | | | | |
| | Ammonia measured as N (3) | 1500 | | 1500 | 15000 | | | | | | | 1,500 | 15,000 | | | | | | | | | | | | | | | | | | |
| | Tributyltin | 0.01 | | 0.01000 | | | | | | | | 0.010 | | | | | | | | | | | | | | | | | | | |
| | Total PAHs | 15 | | 15.00000 | | | | | | | | | | 15 | | | | | | | | | | | | | | | | | |

Notes:

1) Receiving water is Marine based on salinity data from BA40 and BB15

2) pH is mean of results from monitoring locations BA40 and BB15.

3) Criteria in Basin Plan, measured at the Oyster Point Regional Monitoring Program station

**SFIA Mel Leong WQCP**
**Industrial Plant**
**Table 2 Data Input for RPA**

| | | EFFLUENT DATA | | | | | BACKGROUND DATA (B) | | | | | |
|---|---|---|---|---|---|---|---|---|---|---|---|---|
| *CTR No.* | *Constituent name* | *Effluent Data Available (Y/N)?* | *Are all data points non-detects (Y/N)?* | *If all data points ND Enter the min detection limit (MDL) (ug/L)* | *Enter the pollutant effluent detected max conc (ug/L)* | Input Check | *B Available (Y/N)?* | *Are all B non-detects (Y/N)?* | *If all data points ND Enter the min detection limit (MDL) (ug/L)* | *Enter the Detected Maximum Background Conc* | Input Check | *7) Review other information in the SIP page 4. If information is unavailable or insufficient: 8) the RWQCB shall establish interim monitoring requirements.* |
| 1 | Antimony | Y | N | | 3.0 | | Y | N | | 1.8 | | |
| 2 | Arsenic | Y | N | | 9.87 | | Y | N | | 2.46 | | |
| 3 | Beryllium | Y | Y | 0.5 | | | Y | N | | 0.215 | | No Criteria |
| 4 | Cadmium | Y | N | | 2.365 | | Y | N | | 0.1268 | | |
| 5a | Chromium (III) | N | | | | | N | | | | | |
| 5b | Chromium (VI) | Y | N | | 21.9 | | Y | N | | 4.4 | | |
| 6 | Copper | Y | N | | 41.296 | | Y | N | | 2.45 | | |
| 7 | Lead | Y | N | | 71.28 | | Y | N | | 0.8040 | | |
| 8 | Mercury (303d listed) | Y | N | | 0.034 | | Y | N | | 0.0086 | | |
| 9 | Nickel (303d listed) | Y | N | | 29.935 | | Y | N | | 3.73 | | |
| 10 | Selenium | Y | N | | 1.402 | | Y | N | | 0.39 | | |
| 11 | Silver | Y | N | | 0.305 | | Y | N | | 0.052 | | |
| 12 | Thallium | Y | N | | 0.3 | | Y | N | | 0.21 | | |
| 13 | Zinc | Y | N | | 56.64 | | Y | N | | 5.1 | | |
| 14 | Cyanide | Y | N | | 33 | | Y | Y | 0.4 | | | |
| 15 | Asbestos | N | | | | | N | | | | | No Criteria |
| 16 | 2,3,7,8-TCDD (Dioxin) (303d listed) | Y | Y | 8.23E-07 | | | N | | | | | |
| 16-TEQ | Dioxin TEQ (303d listed) | Y | N | | 4.74E-07 | | Y | N | | 7.10E-08 | | |
| 17 | Acrolein | Y | Y | 5 | | | Y | Y | 0.5 | | | |
| 18 | Acrylonitrile | Y | Y | 5 | | | Y | N | | 0.03 | | |
| 19 | Benzene | Y | Y | 0.5 | | | Y | Y | 0.05 | | | |
| 20 | Bromoform | Y | N | | 85 | | Y | Y | 0.5 | | | |
| 21 | Carbon Tetrachloride | Y | Y | 0.5 | | | Y | N | | 0.06 | | |
| 22 | Chlorobenzene | Y | Y | 0.5 | | | Y | Y | 0.5 | | | |
| 23 | Chlorodibromomethane | Y | N | | 22 | | Y | Y | 0.05 | | | |
| 24 | Chloroethane | Y | Y | 0.5 | | | Y | Y | 0.5 | | | No Criteria |
| 25 | 2-Chloroethylvinyl Ether | Y | Y | 0.5 | | | Y | Y | 0.5 | | | No Criteria |
| 26 | Chloroform | Y | N | | 5.6 | | Y | Y | 0.5 | | | No Criteria |
| 27 | Dichlorobromomethane | Y | N | | 8.5 | | Y | Y | 0.05 | | | |
| 28 | 1,1-Dichloroethane | Y | Y | 0.5 | | | Y | Y | 0.05 | | | No Criteria |
| 29 | 1,2-Dichloroethane | Y | Y | 0.5 | | | Y | N | | 0.04 | | |
| 30 | 1,1-Dichloroethylene | Y | Y | 0.5 | | | Y | Y | 0.5 | | | |
| 31 | 1,2-Dichloropropane | Y | Y | 0.5 | | | Y | Y | 0.05 | | | |
| 32 | 1,3-Dichloropropylene | Y | Y | 0.5 | | | N | | | | | |
| 33 | Ethylbenzene | Y | N | | 0.407 | | Y | Y | 0.5 | | | |
| 34 | Methyl Bromide | Y | N | | 0.34 | | Y | Y | 0.5 | | | |
| 35 | Methyl Chloride | Y | Y | 0.5 | | | Y | Y | 0.5 | | | No Criteria |
| 36 | Methylene Chloride | Y | N | | 0.383 | | Y | N | | 0.5 | | |
| 37 | 1,1,2,2-Tetrachloroethane | Y | Y | 0.5 | | | Y | Y | 0.05 | | | |
| 38 | Tetrachloroethylene | Y | Y | 0.5 | | | Y | Y | 0.05 | | | |
| 39 | Toluene | Y | N | | 2.33 | | Y | Y | 0.3 | | | |
| 40 | 1,2-Trans-Dichloroethylene | Y | Y | 0.5 | | | Y | Y | 0.5 | | | |
| 41 | 1,1,1-Trichloroethane | Y | N | | 0.7 | | Y | Y | 0.5 | | | No Criteria |
| 42 | 1,1,2-Trichloroethane | Y | Y | 0.5 | | | Y | Y | 0.05 | | | |
| 43 | Trichloroethylene | Y | Y | 0.5 | | | Y | Y | 0.5 | | | |
| 44 | Vinyl Chloride | Y | Y | 0.5 | | | Y | Y | 0.5 | | | |
| 45 | 2-Chlorophenol | Y | Y | 1.05 | | | Y | Y | 1.2 | | | |
| 46 | 2,4-Dichlorophenol | Y | Y | 1.2 | | | Y | Y | 1.3 | | | |
| 47 | 2,4-Dimethylphenol | Y | Y | 1 | | | Y | Y | 1.3 | | | |
| 48 | 2-Methyl-4,6-Dinitrophenol | Y | Y | 1 | | | Y | Y | 1.2 | | | |
| 49 | 2,4-Dinitrophenol | Y | Y | 3.89 | | | Y | Y | 0.7 | | | |
| 50 | 2-Nitrophenol | Y | Y | 1.86 | | | Y | Y | 1.3 | | | No Criteria |
| 51 | 4-Nitrophenol | Y | Y | 1.96 | | | Y | Y | 1.6 | | | No Criteria |
| 52 | 3-Methyl-4-Chlorophenol | Y | Y | 1 | | | Y | Y | 1.1 | | | No Criteria |
| 53 | Pentachlorophenol | Y | Y | 1.04 | | | Y | Y | 1 | | | |
| 54 | Phenol | Y | Y | 1 | | | Y | Y | 1.3 | | | |
| 55 | 2,4,6-Trichlorophenol | Y | Y | 1.88 | | | Y | Y | 1.3 | | | |
| 56 | Acenaphthene | Y | Y | 0.52 | | | Y | N | | 0.0015 | | |
| 57 | Acenaphthylene | Y | Y | 0.39 | | | Y | N | | 0.00053 | | No Criteria |
| 58 | Anthracene | Y | Y | 0.02 | | | Y | N | | 0.0005 | | |
| 59 | Benzidine | Y | Y | 2.5 | | | Y | Y | 0.0015 | | | |
| 60 | Benzo(a)Anthracene | Y | Y | 0.05 | | | Y | N | | 0.0053 | | |
| 61 | Benzo(a)Pyrene | Y | Y | 0.05 | | | Y | N | | 0.00029 | | |
| 62 | Benzo(b)Fluoranthene | Y | Y | 0.1 | | | Y | N | | 0.0046 | | |
| 63 | Benzo(ghi)Perylene | Y | Y | 0.09 | | | Y | N | | 0.0027 | | No Criteria |
| 64 | Benzo(k)Fluoranthene | Y | Y | 0.05 | | | Y | N | | 0.0015 | | |
| 65 | Bis(2-Chloroethoxy)Methane | Y | Y | 0.97 | | | Y | Y | 0.3 | | | No Criteria |
| 66 | Bis(2-Chloroethyl)Ether | Y | Y | 0.97 | | | Y | Y | 0.3 | | | |
| 67 | Bis(2-Chloroisopropyl)Ether | Y | Y | 0.81 | | | N | | | | | |
| 68 | Bis(2-Ethylhexyl)Phthalate | Y | Y | 0.69 | | | Y | Y | 0.5 | | | |
| 69 | 4-Bromophenyl Phenyl Ether | Y | Y | 1 | | | Y | Y | 0.23 | | | No Criteria |
| 70 | Butylbenzyl Phthalate | Y | Y | 0.95 | | | Y | Y | 0.52 | | | |
| 71 | 2-Chloronaphthalene | Y | Y | 1 | | | Y | Y | 0.3 | | | |
| 72 | 4-Chlorophenyl Phenyl Ether | Y | Y | 0.89 | | | Y | Y | 0.3 | | | No Criteria |
| 73 | Chrysene | Y | Y | 0.9 | | | Y | N | | 0.0024 | | |
| 74 | Dibenzo(a,h)Anthracene | Y | Y | 0.09 | | | Y | N | | 0.00064 | | |
| 75 | 1,2-Dichlorobenzene | Y | Y | 0.5 | | | Y | Y | 0.8 | | | |
| 76 | 1,3-Dichlorobenzene | Y | Y | 0.5 | | | Y | Y | 0.8 | | | |
| 77 | 1,4-Dichlorobenzene | Y | Y | 0.5 | | | Y | Y | 0.8 | | | |
| 78 | 3,3-Dichlorobenzidine | Y | Y | 0.9 | | | Y | Y | 0.001 | | | |
| 79 | Diethyl Phthalate | Y | Y | 1 | | | Y | Y | 0.24 | | | |
| 80 | Dimethyl Phthalate | Y | Y | 1 | | | Y | Y | 0.24 | | | |
| 81 | Di-n-Butyl Phthalate | Y | Y | 0.87 | | | Y | Y | 0.5 | | | |
| 82 | 2,4-Dinitrotoluene | Y | Y | 1 | | | Y | Y | 0.27 | | | |
| 83 | 2,6-Dinitrotoluene | Y | Y | 1.29 | | | Y | Y | 0.29 | | | No Criteria |
| 84 | Di-n-Octyl Phthalate | Y | N | | 2.0 | | Y | Y | 0.38 | | | No Criteria |
| 85 | 1,2-Diphenylhydrazine | Y | Y | 1 | | | Y | N | | 0.0037 | | |
| 86 | Fluoranthene | Y | Y | 0.1 | | | Y | N | | 0.011 | | |
| 87 | Fluorene | Y | Y | 0.1 | | | Y | N | | 0.00208 | | |
| 88 | Hexachlorobenzene | Y | Y | 0.98 | | | Y | N | | 0.0000202 | | |
| 89 | Hexachlorobutadiene | Y | Y | 1 | | | Y | Y | 0.3 | | | |
| 90 | Hexachlorocyclopentadiene | Y | Y | 1 | | | Y | Y | 0.31 | | | |
| 91 | Hexachloroethane | Y | Y | 1 | | | Y | Y | 0.2 | | | |
| 92 | Indeno(1,2,3-cd) Pyrene | Y | Y | 0.1 | | | Y | N | | 0.004 | | |

**SFIA Mel Leong WQCP**
**Industrial Plant**
**Table 2 Data Input for RPA**

| | | EFFLUENT DATA | | | | | BACKGROUND DATA (B) | | | | | |
|---|---|---|---|---|---|---|---|---|---|---|---|---|
| *CTR No.* | *Constituent name* | *Effluent Data Available (Y/N)?* | *Are all data points non-detects (Y/N)?* | *If all data points ND Enter the min detection limit (MDL) (ug/L)* | *Enter the pollutant effluent detected max conc (ug/L)* | Input Check | *B Available (Y/N)?* | *Are all B non-detects (Y/N)?* | *If all data points ND Enter the min detection limit (MDL) (ug/L)* | *Enter the Detected Maximum Background Conc* | Input Check | *7) Review other information in the SIP page 4. If information is unavailable or insufficient: 8) the RWQCB shall establish interim monitoring requirements.* |
| 93 | Isophorone | Y | Y | 0.95 | | | Y | Y | 0.3 | | | |
| 94 | Naphthalene | Y | Y | 1 | | | Y | N | | 0.0023 | | No Criteria |
| 95 | Nitrobenzene | Y | Y | 0.71 | | | Y | Y | 0.25 | | | |
| 96 | N-Nitrosodimethylamine | Y | Y | 0.1 | | | Y | Y | 0.3 | | | |
| 97 | N-Nitrosodi-n-Propylamine | Y | Y | 0.84 | | | Y | Y | 0.001 | | | |
| 98 | N-Nitrosodiphenylamine | Y | Y | 0.94 | | | Y | Y | 0.001 | | | |
| 99 | Phenanthrene | Y | Y | 0.93 | | | Y | N | | 0.0061 | | No Criteria |
| 100 | Pyrene | Y | Y | 0.1 | | | Y | N | | 0.0051 | | |
| 101 | 1,2,4-Trichlorobenzene | Y | Y | 0.94 | | | Y | Y | 0.3 | | | No Criteria |
| 102 | Aldrin | Y | Y | 0.005 | | | N | | | | | |
| 103 | alpha-BHC | Y | N | | 0.051 | | Y | N | | 0.000496 | | |
| 104 | beta-BHC | Y | N | | 0.039 | | Y | N | | 0.000413 | | |
| 105 | gamma-BHC | Y | Y | 0.005 | | | Y | N | | 0.0007034 | | |
| 106 | delta-BHC | Y | Y | 0.005 | | | Y | N | | 0.000042 | | No Criteria |
| 107 | Chlordane (303d listed) | Y | Y | 0.005 | | | Y | N | | 0.00018 | | |
| 108 | 4,4-DDT (303d listed) | Y | Y | 0.01 | | | Y | N | | 0.000066 | | |
| 109 | 4,4-DDE | Y | Y | 0.01 | | | Y | N | | 0.000693 | | |
| 110 | 4,4-DDD | Y | Y | 0.03 | | | Y | N | | 0.000313 | | |
| 111 | Dieldrin (303d listed) | Y | Y | 0.01 | | | Y | N | | 0.000264 | | |
| 112 | alpha-Endosulfan | Y | Y | 0.01 | | | Y | N | | 0.000031 | | |
| 113 | beta-Endosulfan | Y | Y | 0.01 | | | Y | N | | 0.000069 | | |
| 114 | Endosulfan Sulfate | Y | Y | 0.03 | | | Y | N | | 0.0000819 | | |
| 115 | Endrin | Y | N | | 0.01 | | Y | N | | 0.000036 | | |
| 116 | Endrin Aldehyde | Y | Y | 0.01 | | | N | | | | | |
| 117 | Heptachlor | Y | N | | 0.035 | | Y | N | | 0.000019 | | |
| 118 | Heptachlor Epoxide | Y | Y | 0.005 | | | Y | N | | 0.00002458 | | |
| 119-125 | PCBs sum (303d listed) | Y | Y | 0.47 | | | N | | | | | |
| 126 | Toxaphene | Y | Y | 0.5 | | | N | | | | | |
| | Ammonia [(2)] | Y | N | | 118,000 | | Y | N | | 210 | | |
| | Tributyltin | Y | Y | 0.0046 | | | N | | | | | |
| | Total PAHs | Y | Y | 0.02 | | | Y | N | | 0.26 | | |

Notes:

1) Background data used for toxics is from monitoring location BC10.

2) Background data for ammonia taken from Oyster Point RMP station

**SFIA Mel Leong WQCP**
**Industrial Plant**
**Table 3 RPA Results**

| Beginning | | | Step 2 | Step 3 | | | | | Step 4 | Step 2 | Step 3 | | Step 4. | Step 5. | Step 6. | Step 7 & 8. | | |
|---|---|---|---|---|---|---|---|---|---|---|---|---|---|---|---|---|---|---|
| | | C ( µg/L) | | | | | | Maximum Pollutant Concentration (MEC) (ug/L) | MEC vs. C | | | | | | B vs. C | 7) Review other information in the SIP page 4. Y if other information indicates limits are required. If information is unavailable or insufficient: 8) the RWQCB shall establish interim monitoring requirements. | | |
| | Constituent name | Lowest (most stringent) Criteria (a) (Enter "No Criteria" for no criteria) | Effluent Data Available? | Are all data points non-detects? | Minimum MDL (ug/L) if all data ND. | Enter the pollutant effluent detected max conc (ug/L) | If all data points are ND and MinDL>C, interim monitoring is required | (MEC= detected max value; if all ND & MDL<C then MEC = MDL) | Y if If MEC >= C, effluent limitation is required; 2. If MEC<C, go to Step 5 | Background Data Available? | Are all background data points non-detects? | If all background data points ND Enter the min detection limit (MDL) (ug/L) | Enter the pollutant background detected max conc (ug/L) | If all B is ND, is MDL>C? (If Y, Go To Step 7) | If B>C, effluent limitation is required | | RPA Result | Reason |
| A | B | C | D | E | F | G | H | I | J | L | M | N | O | P | Q | r | S | T |
| 1 | Antimony | 4300 | Y | N | | 3 | | 3 | MEC<C, go to Step 5 | Y | | | 1.8 | | B<C, Step 7 | | | |
| 2 | Arsenic | 36 | Y | N | | 9.87 | | 9.87 | MEC<C, go to Step 5 | Y | | | 2.46 | | B<C, Step 7 | | | |
| 3 | Beryllium | No Criteria | Y | Y | 0.5 | | No Criteria | 0.5 | No Criteria | Y | | | 0.215 | | No Criteria | No Criteria | | **Uo - No Criteria** |
| 4 | Cadmium | 9.3561368 2 | Y | | | 2.365 | | 2.365 | MEC<C, go to Step 5 | Y | | | 0.1268 | | B<C, Step 7 | | | |
| 5a | Chromium (III) | No Criteria | N | | | 0 | No Effluent Data | | | | | | | | No detected value of B, Step 7 | | | |
| 5b | Chromium (VI) | 50.3524673 | Y | N | | 21.9 | | 21.9 | MEC<C, go to Step 5 | Y | | | 4.4 | | B<C, Step 7 | | | |
| 6 | Copper | 4.189 | Y | N | | 41.296 | | 41.296 | Y | Y | | | 2.45 | | B<C, Step 7 | | Y | **MEC => C [41.3 ug/l vs 4.19 ug/l ]** |
| 7 | Lead | 8.5173501 6 | Y | N | | 71.28 | | 71.28 | Y | Y | | | 0.804 | | B<C, Step 7 | | Y | **MEC => C [71.280 ug/l vs 8.517 ug/l ]** |
| 8 | Mercury (303d listed) | 0.025 | Y | N | | 0.034 | | 0.034 | Y | Y | | | 0.0086 | | B<C, Step 7 | | Y | **MEC => C [0.034 ug/l vs 0.025 ug/l ]** |
| 9 | Nickel (303d listed) | 12.6153846 | Y | N | | 29.935 | | 29.935 | Y | Y | | | 3.73 | | B<C, Step 7 | | Y | **MEC => C [29.94 ug/l vs 12.62 ug/l ]** |
| 10 | Selenium | 5 | Y | N | | 1.402 | | 1.402 | MEC<C, go to Step 5 | Y | | | 0.39 | | B<C, Step 7 | | | |
| 11 | Silver | 2.2352941 2 | Y | N | | 0.305 | | 0.305 | MEC<C, go to Step 5 | Y | | | 0.052 | | B<C, Step 7 | | | |
| 12 | Thallium | 6.3 | Y | N | | 0.3 | | 0.3 | MEC<C, go to Step 5 | Y | | | 0.21 | | B<C, Step 7 | | | |
| 13 | Zinc | 85.6236786 | Y | N | | 56.64 | | 56.64 | MEC<C, go to Step 5 | Y | | | 5.1 | | B<C, Step 7 | | | |
| 14 | Cyanide | 1 | Y | N | | 33 | | 33 | Y | Y | Y | 0.4 | | N | No detected value of B, Step 7 | | Y | **MEC => C [33.0 ug/l vs 1.0 ug/l ]** |
| 15 | Asbestos | No Criteria | N | | | 0 | No Criteria | | No Criteria | | | | | | No Criteria | No Criteria | | **Uo - No Criteria** |
| 16 | 2,3,7,8-TCDD (Dioxin) (303d list | 1.4E-08 | Y | Y | 8.23E-07 | | MDL > C, Interim Monitor, Go To Step 5 | | | | | | | | No detected value of B, Step 7 | | | |
| 16-TEQ | Dioxin TEQ (303d listed) | 1.4E-08 | Y | N | | 4.74E-07 | | 4.74E-07 | Y | Y | | | 7.10E-08 | | Y | | Y | **MEC => C [4.7E-07 ug/l vs 1.4E-08 ug/l ]** |
| 17 | Acrolein | 780 | Y | Y | 5 | | MDL<=C, MDL=MEC | 5 | MEC<C, go to Step 5 | Y | Y | 0.5 | | N | No detected value of B, Step 7 | | | |
| 18 | Acrylonitrile | 0.66 | Y | Y | 5 | | MDL > C, Interim Monitor, Go To Step 5 | | | Y | | | 0.03 | | B<C, Step 7 | | | **Effluent MDL > C, Interim Monitor** |
| 19 | Benzene | 71 | Y | Y | 0.5 | | MDL<=C, MDL=MEC | 0.5 | MEC<C, go to Step 5 | Y | Y | 0.05 | | N | No detected value of B, Step 7 | | | |
| 20 | Bromoform | 360 | Y | N | | 85 | | 85 | MEC<C, go to Step 5 | Y | Y | 0.5 | | N | No detected value of B, Step 7 | | | |
| 21 | Carbon Tetrachloride | 4.4 | Y | Y | 0.5 | | MDL<=C, MDL=MEC | 0.5 | MEC<C, go to Step 5 | Y | | | 0.06 | | B<C, Step 7 | | | |
| 22 | Chlorobenzene | 21000 | Y | Y | 0.5 | | MDL<=C, MDL=MEC | 0.5 | MEC<C, go to Step 5 | Y | Y | 0.5 | | N | No detected value of B, Step 7 | | | |
| 23 | Chlorodibromomethane | 34 | Y | N | | 22 | | 22 | MEC<C, go to Step 5 | Y | Y | 0.05 | | N | No detected value of B, Step 7 | | | |
| 24 | Chloroethane | No Criteria | Y | Y | 0.5 | | No Criteria | 0.5 | No Criteria | Y | Y | 0.5 | | N | No Criteria | No Criteria | | **Uo - No Criteria** |
| 25 | 2-Chloroethylvinyl Ether | No Criteria | Y | Y | 0.5 | | No Criteria | 0.5 | No Criteria | Y | Y | 0.5 | | N | No Criteria | No Criteria | | **Uo - No Criteria** |
| 26 | Chloroform | No Criteria | Y | N | | 5.6 | No Criteria | 5.6 | No Criteria | Y | Y | 0.5 | | N | No Criteria | No Criteria | | **Uo - No Criteria** |
| 27 | Dichlorobromomethane | 46 | Y | N | | 8.5 | | 8.5 | MEC<C, go to Step 5 | Y | Y | 0.05 | | N | No detected value of B, Step 7 | | | |
| 28 | 1,1-Dichloroethane | No Criteria | Y | Y | 0.5 | | No Criteria | 0.5 | No Criteria | Y | Y | 0.05 | | N | No Criteria | No Criteria | | **Uo - No Criteria** |
| 29 | 1,2-Dichloroethane | 99 | Y | Y | 0.5 | | MDL<=C, MDL=MEC | 0.5 | MEC<C, go to Step 5 | Y | | | 0.04 | | B<C, Step 7 | | | |
| 30 | 1,1-Dichloroethylene | 3.2 | Y | Y | 0.5 | | MDL<=C, MDL=MEC | 0.5 | MEC<C, go to Step 5 | Y | Y | 0.5 | | N | No detected value of B, Step 7 | | | |
| 31 | 1,2-Dichloropropane | 39 | Y | Y | 0.5 | | MDL<=C, MDL=MEC | 0.5 | MEC<C, go to Step 5 | Y | Y | 0.05 | | N | No detected value of B, Step 7 | | | |
| 32 | 1,3-Dichloropropylene | 1700 | Y | Y | 0.5 | | MDL<=C, MDL=MEC | 0.5 | MEC<C, go to Step 5 | | | | | | No detected value of B, Step 7 | | | |
| 33 | Ethylbenzene | 29000 | Y | N | | 0.407 | | 0.407 | MEC<C, go to Step 5 | Y | Y | 0.5 | | N | No detected value of B, Step 7 | | | |
| 34 | Methyl Bromide | 4000 | Y | N | | 0.34 | | 0.34 | MEC<C, go to Step 5 | Y | Y | 0.5 | | N | No detected value of B, Step 7 | | | |
| 35 | Methyl Chloride | No Criteria | Y | Y | 0.5 | | No Criteria | 0.5 | No Criteria | Y | Y | 0.5 | | N | No Criteria | No Criteria | | **Uo - No Criteria** |
| 36 | Methylene Chloride | 1600 | Y | N | | 0.383 | | 0.383 | MEC<C, go to Step 5 | Y | | | 0.5 | | B<C, Step 7 | | | |
| 37 | 1,1,2,2-Tetrachloroethane | 11 | Y | Y | 0.5 | | MDL<=C, MDL=MEC | 0.5 | MEC<C, go to Step 5 | Y | Y | 0.05 | | N | No detected value of B, Step 7 | | | |
| 38 | Tetrachloroethylene | 8.85 | Y | Y | 0.5 | | MDL<=C, MDL=MEC | 0.5 | MEC<C, go to Step 5 | Y | Y | 0.05 | | N | No detected value of B, Step 7 | | | |
| 39 | Toluene | 200000 | Y | N | | 2.33 | | 2.33 | MEC<C, go to Step 5 | Y | Y | 0.3 | | N | No detected value of B, Step 7 | | | |
| 40 | 1,2-Trans-Dichloroethylene | 140000 | Y | Y | 0.5 | | MDL<=C, MDL=MEC | 0.5 | MEC<C, go to Step 5 | Y | Y | 0.5 | | N | No detected value of B, Step 7 | | | |
| 41 | 1,1,1-Trichloroethane | No Criteria | Y | N | | 0.7 | No Criteria | 0.7 | No Criteria | Y | Y | 0.5 | | N | No Criteria | No Criteria | | **Uo - No Criteria** |
| 42 | 1,1,2-Trichloroethane | 42 | Y | Y | 0.5 | | MDL<=C, MDL=MEC | 0.5 | MEC<C, go to Step 5 | Y | Y | 0.05 | | N | No detected value of B, Step 7 | | | |
| 43 | Trichloroethylene | 81 | Y | Y | 0.5 | | MDL<=C, MDL=MEC | 0.5 | MEC<C, go to Step 5 | Y | Y | 0.5 | | N | No detected value of B, Step 7 | | | |
| 44 | Vinyl Chloride | 525 | Y | Y | 0.5 | | MDL<=C, MDL=MEC | 0.5 | MEC<C, go to Step 5 | Y | Y | 0.5 | | N | No detected value of B, Step 7 | | | |
| 45 | 2-Chlorophenol | 400 | Y | Y | 1.05 | | MDL<=C, MDL=MEC | 1.05 | MEC<C, go to Step 5 | Y | Y | 1.2 | | N | No detected value of B, Step 7 | | | |
| 46 | 2,4-Dichlorophenol | 790 | Y | Y | 1.2 | | MDL<=C, MDL=MEC | 1.2 | MEC<C, go to Step 5 | Y | Y | 1.3 | | N | No detected value of B, Step 7 | | | |
| 47 | 2,4-Dimethylphenol | 2300 | Y | Y | 1 | | MDL<=C, MDL=MEC | 1 | MEC<C, go to Step 5 | Y | Y | 1.3 | | N | No detected value of B, Step 7 | | | |
| 48 | 2-Methyl-4,6-Dinitrophenol | 765 | Y | Y | 1 | | MDL<=C, MDL=MEC | 1 | MEC<C, go to Step 5 | Y | Y | 1.2 | | N | No detected value of B, Step 7 | | | |
| 49 | 2,4-Dinitrophenol | 14000 | Y | Y | 3.89 | | MDL<=C, MDL=MEC | 3.89 | MEC<C, go to Step 5 | Y | Y | 0.7 | | N | No detected value of B, Step 7 | | | |
| 50 | 2-Nitrophenol | No Criteria | Y | Y | 1.86 | | No Criteria | 1.86 | No Criteria | Y | Y | 1.3 | | N | No Criteria | No Criteria | | **Uo - No Criteria** |
| 51 | 4-Nitrophenol | No Criteria | Y | Y | 1.96 | | No Criteria | 1.96 | No Criteria | Y | Y | 1.6 | | N | No Criteria | No Criteria | | **Uo - No Criteria** |
| 52 | 3-Methyl-4-Chlorophenol | No Criteria | Y | Y | 1 | | No Criteria | 1 | No Criteria | Y | Y | 1.1 | | N | No Criteria | No Criteria | | **Uo - No Criteria** |
| 53 | Pentachlorophenol | 7.9 | Y | Y | 1.04 | | MDL<=C, MDL=MEC | 1.04 | MEC<C, go to Step 5 | Y | Y | 1 | | N | No detected value of B, Step 7 | | | |
| 54 | Phenol | 4600000 | Y | Y | 1 | | MDL<=C, MDL=MEC | 1 | MEC<C, go to Step 5 | Y | Y | 1.3 | | N | No detected value of B, Step 7 | | | |
| 55 | 2,4,6-Trichlorophenol | 6.5 | Y | Y | 1.88 | | All ND MDL<=C, MDL=MEC | 1.88 | MEC<C, go to Step 5 | Y | Y | 1.3 | | N | No detected value of B, Step 7 | | | |
| 56 | Acenaphthene | 2700 | Y | Y | 0.52 | | All ND MDL<=C, MDL=MEC | 0.52 | MEC<C, go to Step 5 | Y | | | 0.0015 | | B<C, Step 7 | | | |
| 57 | Acenaphthylene | No Criteria | Y | Y | 0.39 | | No Criteria | 0.39 | No Criteria | Y | | | 0.00053 | | No Criteria | No Criteria | | **Uo - No Criteria** |
| 58 | Anthracene | 110000 | Y | Y | 0.02 | | All ND MDL<=C, MDL=MEC | 0.02 | MEC<C, go to Step 5 | Y | | | 0.0005 | | B<C, Step 7 | | | |
| 59 | Benzidine | 0.00054 | Y | Y | 2.5 | | MDL > C, Go to Step 5 | | | Y | Y | 0.0015 | | Y | No detected value of B, Step 7 | | | |
| 60 | Benzo(a)Anthracene | 0.049 | Y | Y | 0.05 | | MDL > C, Go to Step 5 | | | Y | | | 0.0053 | | B<C, Step 7 | | | |
| 61 | Benzo(a)Pyrene | 0.049 | Y | Y | 0.05 | | MDL > C, Go to Step 5 | | | Y | | | 0.00029 | | B<C, Step 7 | | | |
| 62 | Benzo(b)Fluoranthene | 0.049 | Y | Y | 0.1 | | MDL > C, Go to Step 5 | | | Y | | | 0.0046 | | B<C, Step 7 | | | |
| 63 | Benzo(ghi)Perylene | No Criteria | Y | Y | 0.09 | | No Criteria | 0.09 | No Criteria | Y | | | 0.0027 | | No Criteria | No Criteria | | **Uo - No Criteria** |
| 64 | Benzo(k)Fluoranthene | 0.049 | Y | Y | 0.05 | | MDL > C, Go to Step 5 | | | Y | | | 0.0015 | | B<C, Step 7 | | | |
| 65 | Bis(2-Chloroethoxy)Methane | No Criteria | Y | Y | 0.97 | | No Criteria | 0.97 | No Criteria | Y | Y | 0.3 | | N | No Criteria | No Criteria | | **Uo - No Criteria** |
| 66 | Bis(2-Chloroethyl)Ether | 1.4 | Y | Y | 0.97 | | All ND MDL<=C, MDL=MEC | 0.97 | MEC<C, go to Step 5 | Y | Y | 0.3 | | N | No detected value of B, Step 7 | | | |
| 67 | Bis(2-Chloroisopropyl)Ether | 170000 | Y | Y | 0.81 | | All ND MDL<=C, MDL=MEC | 0.81 | MEC<C, go to Step 5 | | | | | | No detected value of B, Step 7 | | | |
| 68 | Bis(2-Ethylhexyl)Phthalate | 5.9 | Y | Y | 0.69 | | All ND MDL<=C, MDL=MEC | 0.69 | MEC<C, go to Step 5 | Y | Y | 0.5 | | N | No detected value of B, Step 7 | | | |
| 69 | 4-Bromophenyl Phenyl Ether | No Criteria | Y | Y | 1 | | No Criteria | 1 | No Criteria | Y | Y | 0.23 | | N | No Criteria | No Criteria | | **Uo - No Criteria** |
| 70 | Butylbenzyl Phthalate | 5200 | Y | Y | 0.95 | | All ND MDL<=C, MDL=MEC | 0.95 | MEC<C, go to Step 5 | Y | Y | 0.52 | | N | No detected value of B, Step 7 | | | |
| 71 | 2-Chloronaphthalene | 4300 | Y | Y | 1 | | All ND MDL<=C, MDL=MEC | 1 | MEC<C, go to Step 5 | Y | Y | 0.3 | | N | No detected value of B, Step 7 | | | |
| 72 | 4-Chlorophenyl Phenyl Ether | No Criteria | Y | Y | 0.89 | | No Criteria | 0.89 | No Criteria | Y | Y | 0.3 | | N | No Criteria | No Criteria | | **Uo - No Criteria** |
| 73 | Chrysene | 0.049 | Y | Y | 0.9 | | MDL > C, Go to Step 5 | | | Y | | | 0.0024 | | B<C, Step 7 | | | |
| 74 | Dibenzo(a,h)Anthracene | 0.049 | Y | Y | 0.09 | | MDL > C, Go to Step 5 | | | Y | | | 0.00064 | | B<C, Step 7 | | | |
| 75 | 1,2-Dichlorobenzene | 17000 | Y | Y | 0.5 | | All ND MDL<=C, MDL=MEC | 0.5 | MEC<C, go to Step 5 | Y | Y | 0.8 | | N | No detected value of B, Step 7 | | | |
| 76 | 1,3-Dichlorobenzene | 2600 | Y | Y | 0.5 | | All ND MDL<=C, MDL=MEC | 0.5 | MEC<C, go to Step 5 | Y | Y | 0.8 | | N | No detected value of B, Step 7 | | | |
| 77 | 1,4-Dichlorobenzene | 2600 | Y | Y | 0.5 | | All ND MDL<=C, MDL=MEC | 0.5 | MEC<C, go to Step 5 | Y | Y | 0.8 | | N | No detected value of B, Step 7 | | | |
| 78 | 3,3-Dichlorobenzidine | 0.077 | Y | Y | 0.9 | | MDL > C, Go to Step 5 | | | Y | Y | 0.001 | | N | No detected value of B, Step 7 | | | |
| 79 | Diethyl Phthalate | 120000 | Y | Y | 1 | | All ND MDL<=C, MDL=MEC | 1 | MEC<C, go to Step 5 | Y | Y | 0.24 | | N | No detected value of B, Step 7 | | | |
| 80 | Dimethyl Phthalate | 2900000 | Y | Y | 1 | | All ND MDL<=C, MDL=MEC | 1 | MEC<C, go to Step 5 | Y | Y | 0.24 | | N | No detected value of B, Step 7 | | | |
| 81 | Di-n-Butyl Phthalate | 12000 | Y | Y | 0.87 | | All ND MDL<=C, MDL=MEC | 0.87 | MEC<C, go to Step 5 | Y | Y | 0.5 | | N | No detected value of B, Step 7 | | | |
| 82 | 2,4-Dinitrotoluene | 9.1 | Y | Y | 1 | | All ND MDL<=C, MDL=MEC | 1 | MEC<C, go to Step 5 | Y | Y | 0.27 | | N | No detected value of B, Step 7 | | | |
| 83 | 2,6-Dinitrotoluene | No Criteria | Y | Y | 1.29 | | No Criteria | 1.29 | No Criteria | Y | Y | 0.29 | | N | No Criteria | No Criteria | | **Uo - No Criteria** |

**SFIA Mel Leong WQCP**
**Industrial Plant**
**Table 3 RPA Results**

| Beginning | | | Step 2 | Step 3 | | | | | Step 4 | Step 2 | Step 3 | | Step 4. | Step 5. | Step 6. | Step 7 & 8. | | |
|---|---|---|---|---|---|---|---|---|---|---|---|---|---|---|---|---|---|---|
| | Constituent name | C ( µg/L) Lowest (most stringent) Criteria [a] (Enter "No Criteria" for no criteria) | Effluent Data Available? | Are all data points non-detects? | Minimum MDL (ug/L) if all data ND. | Enter the pollutant effluent detected max conc (ug/L) | If all data points are ND and MinDL>C, interim monitoring is required | Maximum Pollutant Concentration (MEC) (ug/L) (MEC= detected max value; if all ND & MDL<C then MEC = MDL) | MEC vs. C Y if If MEC >= C, effluent limitation is required; 2. If MEC<C, go to Step 5 | Background Data Available? | Are all background data points non-detects? | If all background data points ND Enter the min detection limit (MDL) (ug/L) | Enter the pollutant background detected max conc (ug/L) | If all B is ND, is MDL>C? (If Y, Go To Step 7) | B vs. C If B>C, effluent limitation is required | 7) Review other information in the SIP page 4. Y if other information indicates limits are required. If information is unavailable or insufficient: 8) the RWQCB shall establish interim monitoring requirements. | RPA Result | Reason |
| 84 | Di-n-Octyl Phthalate | No Criteria | Y | N | | 2 | No Criteria | 2 | No Criteria | Y | Y | 0.38 | | N | No Criteria | No Criteria | | **Uo - No Criteria** |
| 85 | 1,2-Diphenylhydrazine | 0.54 | Y | Y | 1 | | MDL > C, Interim Monitor, Go To Step 5 | | | Y | | | 0.0037 | | B<C, Step 7 | | | **Effluent MDL > C, Interim Monitor** |
| 86 | Fluoranthene | 370 | Y | Y | 0.1 | | All ND MDL<=C, MDL=MEC | 0.1 | MEC<C, go to Step 5 | Y | | | 0.011 | | B<C, Step 7 | | | |
| 87 | Fluorene | 14000 | Y | Y | 0.1 | | All ND MDL<=C, MDL=MEC | 0.1 | MEC<C, go to Step 5 | Y | | | 0.00208 | | B<C, Step 7 | | | |
| 88 | Hexachlorobenzene | 0.00077 | Y | Y | 0.98 | | MDL > C, Go to Step 5 | | | Y | | | 0.0000202 | | B<C, Step 7 | | | |
| 89 | Hexachlorobutadiene | 50 | Y | Y | 1 | | All ND MDL<=C, MDL=MEC | 1 | MEC<C, go to Step 5 | Y | Y | 0.3 | | N | No detected value of B, Step 7 | | | |
| 90 | Hexachlorocyclopentadiene | 17000 | Y | Y | 1 | | All ND MDL<=C, MDL=MEC | 1 | MEC<C, go to Step 5 | Y | Y | 0.31 | | N | No detected value of B, Step 7 | | | |
| 91 | Hexachloroethane | 8.9 | Y | Y | 1 | | All ND MDL<=C, MDL=MEC | 1 | MEC<C, go to Step 5 | Y | Y | 0.2 | | N | No detected value of B, Step 7 | | | |
| 92 | Indeno(1,2,3-cd) Pyrene | 0.049 | Y | Y | 0.1 | | MDL > C, Go to Step 5 | | | Y | | | 0.004 | | B<C, Step 7 | | | |
| 93 | Isophorone | 600 | Y | Y | 0.95 | | All ND MDL<=C, MDL=MEC | 0.95 | MEC<C, go to Step 5 | Y | Y | 0.3 | | N | No detected value of B, Step 7 | | | |
| 94 | Naphthalene | No Criteria | Y | Y | 1 | | No Criteria | 1 | No Criteria | Y | | | 0.0023 | | No Criteria | No Criteria | | **Uo - No Criteria** |
| 95 | Nitrobenzene | 1900 | Y | Y | 0.71 | | All ND MDL<=C, MDL=MEC | 0.71 | MEC<C, go to Step 5 | Y | Y | 0.25 | | N | No detected value of B, Step 7 | | | |
| 96 | N-Nitrosodimethylamine | 8.1 | Y | Y | 0.1 | | All ND MDL<=C, MDL=MEC | 0.1 | MEC<C, go to Step 5 | Y | Y | 0.3 | | N | No detected value of B, Step 7 | | | |
| 97 | N-Nitrosodi-n-Propylamine | 1.4 | Y | Y | 0.84 | | All ND MDL<=C, MDL=MEC | 0.84 | MEC<C, go to Step 5 | Y | Y | 0.001 | | N | No detected value of B, Step 7 | | | |
| 98 | N-Nitrosodiphenylamine | 16 | Y | Y | 0.94 | | All ND MDL<=C, MDL=MEC | 0.94 | MEC<C, go to Step 5 | Y | Y | 0.001 | | N | No detected value of B, Step 7 | | | |
| 99 | Phenanthrene | No Criteria | Y | Y | 0.93 | | No Criteria | 0.93 | No Criteria | Y | | | 0.0061 | | No Criteria | No Criteria | | **Uo - No Criteria** |
| 100 | Pyrene | 11000 | Y | Y | 0.1 | | All ND MDL<=C, MDL=MEC | 0.1 | MEC<C, go to Step 5 | Y | | | 0.0051 | | B<C, Step 7 | | | |
| 101 | 1,2,4-Trichlorobenzene | No Criteria | Y | Y | 0.94 | | No Criteria | 0.94 | No Criteria | Y | Y | 0.3 | | N | No Criteria | No Criteria | | **Uo - No Criteria** |
| 102 | Aldrin | 0.00014 | Y | Y | 0.005 | | MDL > C, Go to Step 5 | | | | | | | | No detected value of B, Step 7 | | | |
| 103 | alpha-BHC | 0.013 | Y | N | | 0.051 | | 0.051 | Y | Y | | | 0.000496 | | B<C, Step 7 | | Y | **MEC => C [0.0510 ug/l vs 0.0130 ug/l ]** |
| 104 | beta-BHC | 0.046 | Y | N | | 0.039 | | 0.039 | MEC<C, go to Step 5 | Y | | | 0.000413 | | B<C, Step 7 | | | |
| 105 | gamma-BHC | 0.063 | Y | Y | 0.005 | | All ND MDL<=C, MDL=MEC | 0.005 | MEC<C, go to Step 5 | Y | | | 0.0007034 | | B<C, Step 7 | | | |
| 106 | delta-BHC | No Criteria | Y | Y | 0.005 | | No Criteria | 0.005 | No Criteria | Y | | | 0.000042 | | No Criteria | No Criteria | | **Uo - No Criteria** |
| 107 | Chlordane (303d listed) | 0.00059 | Y | Y | 0.005 | | MDL > C, Go to Step 5 | | | Y | | | 0.00018 | | B<C, Step 7 | | | |
| 108 | 4,4-DDT (303d listed) | 0.00059 | Y | Y | 0.01 | | MDL > C, Go to Step 5 | | | Y | | | 0.000066 | | B<C, Step 7 | | | |
| 109 | 4,4-DDE | 0.00059 | Y | Y | 0.01 | | MDL > C, Go to Step 5 | | | Y | | | 0.000693 | | | | | |
| 110 | 4,4-DDD | 0.00084 | Y | Y | 0.03 | | MDL > C, Go to Step 5 | | | Y | | | 0.000313 | | B<C, Step 7 | | | |
| 111 | Dieldrin (303d listed) | 0.00014 | Y | Y | 0.01 | | MDL > C, Go to Step 5 | | | Y | | | 0.000264 | | | | | |
| 112 | alpha-Endosulfan | 0.0087 | Y | Y | 0.01 | | MDL > C, Interim Monitor, Go To Step 5 | | | Y | | | 0.000031 | | B<C, Step 7 | | | **Effluent MDL > C, Interim Monitor** |
| 113 | beta-Endosulfan | 0.0087 | Y | Y | 0.01 | | MDL > C, Interim Monitor, Go To Step 5 | | | Y | | | 0.000069 | | B<C, Step 7 | | | **Effluent MDL > C, Interim Monitor** |
| 114 | Endosulfan Sulfate | 240 | Y | Y | 0.03 | | All ND MDL<=C, MDL=MEC | 0.03 | MEC<C, go to Step 5 | Y | | | 0.0000819 | | B<C, Step 7 | | | |
| 115 | Endrin | 0.0023 | Y | N | | 0.01 | | 0.01 | Y | Y | | | 0.000036 | | B<C, Step 7 | | Y | **MEC => C [0.0100 ug/l vs 0.0023 ug/l ]** |
| 116 | Endrin Aldehyde | 0.81 | Y | Y | 0.01 | | All ND MDL<=C, MDL=MEC | 0.01 | MEC<C, go to Step 5 | | | | | | No detected value of B, Step 7 | | | |
| 117 | Heptachlor | 0.00021 | Y | N | | 0.035 | MDL > C, Go to Step 5 | 0.035 | Y | Y | | | 0.000019 | | B<C, Step 7 | | Y | **MEC => C [0.03500 ug/l vs 0.00021 ug/l ]** |
| 118 | Heptachlor Epoxide | 0.00011 | Y | Y | 0.005 | | MDL > C, Go to Step 5 | | | Y | | | 0.00002458 | | B<C, Step 7 | | | |
| 119-125 | PCBs sum (303d listed) | 0.00017 | Y | Y | 0.47 | | MDL > C, Go to Step 5 | | | | | | | | No detected value of B, Step 7 | | | |
| 126 | Toxaphene | 0.0002 | Y | Y | 0.5 | | MDL > C, Go to Step 5 | | | | | | | | No detected value of B, Step 7 | | | |
| | Ammonia | 1,500 | Y | N | | 120,000 | MDL > C, Go to Step 5 | 118,000 | Y | Y | | | 210 | | B<C, Step 7 | | Y | **MEC => C (120 mg/l vs 1.5 mg/l)** |
| | Tributyltin | 0.01 | Y | Y | 0.0046 | | All ND MDL<=C, MDL=MEC | 0.0046 | MEC<C, go to Step 5 | | | | | | No detected value of B, Step 7 | | | |
| | Total PAHs | 15 | Y | Y | 0.02 | | All ND MDL<=C, MDL=MEC | 0.02 | MEC<C, go to Step 5 | Y | | | 0.26 | | B<C, Step 7 | | | |

a. The most stringent of saltwater criteria were selected for this analysis.

b. Acronyms in the "Final Result" column: Ud: Cannot determine reasonable potential due to the absence of data, or because Minimum DL is greater than water quality objective or CTR criteria

Uo: No criteria available

IM: Interim monitoring is required

**SFIA Mel Leong Plant**
**Industrial Plant**
**Table 6, Salinity Hardness data**

| Sort | | | | | | Hardness | | | | Salinity (by Solomat) | | | | Salinity (by salinometer) | | | | Salinity (SCT) | | | | pH | | | |
|---|---|---|---|---|---|---|---|---|---|---|---|---|---|---|---|---|---|---|---|---|---|---|---|---|---|
| 1 | | | | | | | | | | | | | | | | | | | | | | | | | |
| 2 | | | | | | | | | | | | | | | | | | | | | | | | | |
| 3 | Test Material | Matrix | Site Code | Cruise # | Sample Date | Qual | Result | MDL | Unit | Qual | Result | MDL | Unit | Qual | Result | MDL | Unit | Qual | Result | MDL | Unit | Qual | Result | MDL | Unit |
| 4 | | | | | | | | | | | | | | | | | | | | | | | | | |
| 187 | ES_WATER | WCD | BB15 | 1994-01 | 01/31/1994 | | | | | | | | | | | | | | | | | | | | |
| 188 | ES_WATER | WCD | BB15 | 1994-04 | 04/18/1994 | | | | | | | | | | | | | | | | | | | | |
| 189 | ES_WATER | WCD | BB15 | 1994-08 | 08/15/1994 | | | | | | | | | | | | | | | | | | | | |
| 190 | ES_WATER | WCD | BB15 | 1995-02 | 02/06/1995 | | | | | | | | | | 15.1 | 1.0 | o/oo | | | | | | | | |
| 191 | ES_WATER | WCD | BB15 | 1995-04 | 04/25/1995 | | | | | | | | | | 16.2 | 2.0 | o/oo | | | | | | | | |
| 192 | ES_WATER | WCD | BB15 | 1995-08 | 08/15/1995 | | | | | | | | | | 23.8 | 2.0 | o/oo | | | | | | | | |
| 193 | ES_WATER | WCD | BB15 | 1996-02 | 02/05/1996 | | | | | | | | | | 22.3 | 2.0 | o/oo | | | | | | | | |
| 194 | ES_WATER | WCD | BB15 | 1996-04 | 04/30/1996 | | | | | | | | | | 21.1 | 2.0 | o/oo | | | | | | | | |
| 195 | ES_WATER | WCD | BB15 | 1996-07 | 07/29/1996 | | | | | | | | | | 27.1 | 2.0 | o/oo | | | | | | | | |
| 196 | ES_WATER | WCD | BB15 | 1997-01 | 01/21/1997 | | | | | | 12.9 | 2.0 | o/oo | | | | | | | | | | | | |
| 197 | ES_WATER | WCD | BB15 | 1997-04 | 04/16/1997 | | | | | | 24.1 | 2.0 | o/oo | | | | | | | | | | | | |
| 198 | ES_WATER | WCD | BB15 | 1997-07 | 07/28/1997 | | | | | | | | | | 30.0 | 2.0 | o/oo | | | | | | | | |
| 199 | ES_WATER | WCD | BB15 | 1998-02 | 01/27/1998 | | | | | | | | | | 19.2 | 2.0 | o/oo | | | | | | | | |
| 200 | ES_WATER | WCD | BB15 | 1998-04 | 04/20/1998 | | | | | | | | | | 17.7 | | o/oo | | | | | | | | |
| 201 | ES_WATER | WCD | BB15 | 1998-07 | 07/20/1998 | | | | | | | | | | 22.1 | 2.0 | o/oo | | | | | | | | |
| 202 | ES_WATER | WCD | BB15 | 1999-02 | 02/01/1999 | | | | | | | | | | 24.0 | 2.0 | psu | | | | | | | | |
| 203 | ES_WATER | WCD | BB15 | 1999-04 | 04/12/1999 | | | | | | | | | | 21.0 | 2.0 | psu | | | | | | | | |
| 204 | ES_WATER | WCD | BB15 | 1999-07 | 07/13/1999 | | | | | | | | | | 27.9 | 2.0 | psu | | | | | | | | |
| 205 | ES_WATER | WCD | BB15 | 2000-02 | 02/01/2000 | | | | | | | | | | 26.8 | 2.0 | psu | | | | | | | | |
| 206 | ES_WATER | WCD | BB15 | 2000-07 | 07/11/2000 | | | | | | | | | | 28.1 | 2.0 | psu | | | | | | | | |
| 207 | ES_WATER | WCD | BB15 | 2001-02 | 02/06/2001 | | | | | | | | | | 28.6 | 2.0 | psu | | | | | | | | |
| 208 | ES_WATER | WCD | BB15 | 2001-08 | 07/31/2001 | | | | | | | | | | 30.4 | 2.0 | psu | | | | | | | | |
| 386 | ES_WATER | WCT | BB15 | 1994-01 | 01/31/1994 | | | | | | | | | | | | | | 28.2 | 0.0 | o/oo | | 7.7 | 0.1 | pH |
| 387 | ES_WATER | WCT | BB15 | 1994-04 | 04/18/1994 | | | | | | | | | | | | | | 26.7 | 0.0 | o/oo | | 8.1 | 0.1 | pH |
| 388 | ES_WATER | WCT | BB15 | 1994-08 | 08/15/1994 | | | | | | | | | | | | | | 31.0 | 1.0 | o/oo | | 8.0 | 0.1 | pH |
| 389 | ES_WATER | WCT | BB15 | 1995-02 | 02/06/1995 | | | | | | | | | | | | | | 16.0 | | o/oo | | 7.6 | 0.1 | pH |
| 390 | ES_WATER | WCT | BB15 | 1995-04 | 04/25/1995 | | | | | | | | | | | | | | 16.8 | | o/oo | | 8.1 | 0.1 | pH |
| 391 | ES_WATER | WCT | BB15 | 1995-08 | 08/15/1995 | | | | | | | | | | | | | | 24.2 | | o/oo | | 7.8 | 0.1 | pH |
| 392 | ES_WATER | WCT | BB15 | 1996-02 | 02/05/1996 | | | | | | | | | | | | | | 18.0 | 1.0 | o/oo | | 7.9 | 0.0 | pH |
| 393 | ES_WATER | WCT | BB15 | 1996-04 | 04/30/1996 | | | | | | | | | | | | | | 18.0 | | o/oo | | 8.0 | 0.0 | pH |
| 394 | ES_WATER | WCT | BB15 | 1996-07 | 07/29/1996 | | | | | | | | | | | | | | 21.0 | | o/oo | | 8.0 | 0.0 | pH |
| 395 | ES_WATER | WCT | BB15 | 1997-01 | 01/21/1997 | | | | | | | | | | | | | | 12.2 | | o/oo | | 7.8 | 0.0 | pH |
| 396 | ES_WATER | WCT | BB15 | 1997-04 | 04/16/1997 | | | | | | | | | | | | | | | | | | 8.0 | 0.0 | pH |
| 397 | ES_WATER | WCT | BB15 | 1997-07 | 07/28/1997 | | | | | | | | | | | | | | 28.9 | | o/oo | | 7.8 | 0.0 | pH |
| 398 | ES_WATER | WCT | BB15 | 1998-02 | 01/27/1998 | | | | | | | | | | | | | | 19.0 | | o/oo | | 7.8 | 0.0 | pH |
| 399 | ES_WATER | WCT | BB15 | 1998-04 | 04/20/1998 | | | | | | | | | | | | | | 16.8 | | o/oo | | 8.3 | 0.0 | pH |
| 400 | ES_WATER | WCT | BB15 | 1998-07 | 07/20/1998 | | | | | | | | | | | | | | 22.6 | | o/oo | | 8.0 | 0.0 | pH |
| 401 | ES_WATER | WCT | BB15 | 1999-02 | 02/01/1999 | | | | | | | | | | | | | | 28.8 | | o/oo | | 7.8 | | pH |
| 402 | ES_WATER | WCT | BB15 | 1999-04 | 04/12/1999 | | | | | | | | | | | | | | 20.9 | | o/oo | | 8.4 | | pH |
| 403 | ES_WATER | WCT | BB15 | 1999-07 | 07/13/1999 | | | | | | | | | | | | | | 28.0 | | o/oo | | 8.0 | | pH |
| 404 | ES_WATER | WCT | BB15 | 2000-02 | 02/01/2000 | | | | | | | | | | | | | | 26.0 | 0.1 | o/oo | | 7.8 | 0.0 | pH |
| 405 | ES_WATER | WCT | BB15 | 2000-07 | 07/11/2000 | | | | | | | | | | | | | | 28.3 | 0.1 | o/oo | | 7.9 | 0.0 | pH |
| 406 | ES_WATER | WCT | BB15 | 2001-02 | 02/06/2001 | | | | | | | | | | | | | | 28.3 | 0.2 | o/oo | | 8.0 | 0.0 | pH |
| 407 | ES_WATER | WCT | BB15 | 2001-08 | 07/31/2001 | | | | | | | | | | | | | | 30.0 | 0.2 | o/oo | | 7.9 | 0.0 | pH |
| 27 | ES_WATER | WCD | BA40 | 1993-03 | 03/02/1993 | | | | | | | | | | 18.0 | 0.0 | o/oo | | | | | | | | |
| 28 | ES_WATER | WCD | BA40 | 1993-05 | 05/24/1993 | | | | | | | | | | 24.2 | 0.0 | o/oo | | | | | | | | |
| 29 | ES_WATER | WCD | BA40 | 1993-09 | 09/13/1993 | | | | | | | | | | 28.9 | 0.0 | o/oo | | | | | | | | |
| 30 | ES_WATER | WCD | BA40 | 1994-01 | 02/02/1994 | | | | | | | | | | | | | | | | | | | | |
| 31 | ES_WATER | WCD | BA40 | 1994-04 | 04/18/1994 | | | | | | | | | | | | | | | | | | | | |
| 32 | ES_WATER | WCD | BA40 | 1994-08 | 08/16/1994 | | | | | | | | | | | | | | | | | | | | |
| 33 | ES_WATER | WCD | BA40 | 1995-02 | 02/07/1995 | | | | | | | | | | 16.2 | 1.0 | o/oo | | | | | | | | |
| 34 | ES_WATER | WCD | BA40 | 1995-04 | 04/24/1995 | | | | | | | | | | 15.8 | 2.0 | o/oo | | | | | | | | |
| 35 | ES_WATER | WCD | BA40 | 1995-08 | 08/15/1995 | | | | | | | | | | 23.8 | 2.0 | o/oo | | | | | | | | |
| 36 | ES_WATER | WCD | BA40 | 1996-02 | 02/06/1996 | | | | | | | | | | 20.6 | 2.0 | o/oo | | | | | | | | |
| 37 | ES_WATER | WCD | BA40 | 1996-04 | 05/02/1996 | | | | | | | | | | 19.8 | 2.0 | o/oo | | | | | | | | |
| 38 | ES_WATER | WCD | BA40 | 1996-07 | 07/29/1996 | | | | | | | | | | 26.8 | 2.0 | o/oo | | | | | | | | |
| 39 | ES_WATER | WCD | BA40 | 1997-01 | 01/22/1997 | | | | | | 12.1 | 2.0 | o/oo | | | | | | | | | | | | |
| 40 | ES_WATER | WCD | BA40 | 1997-04 | 04/16/1997 | | | | | | 22.2 | 2.0 | o/oo | | | | | | | | | | | | |
| 41 | ES_WATER | WCD | BA40 | 1997-07 | 07/29/1997 | | | | | | | | | | 29.7 | 2.0 | o/oo | | | | | | | | |
| 42 | ES_WATER | WCD | BA40 | 1998-02 | 01/27/1998 | | | | | | | | | | 19.2 | 2.0 | o/oo | | | | | | | | |
| 43 | ES_WATER | WCD | BA40 | 1998-04 | 04/22/1998 | | | | | | | | | | 16.9 | | o/oo | | | | | | | | |
| 44 | ES_WATER | WCD | BA40 | 1998-07 | 07/20/1998 | | | | | | | | | | 20.5 | 2.0 | o/oo | | | | | | | | |
| 45 | ES_WATER | WCD | BA40 | 1999-02 | 02/01/1999 | | | | | | | | | | 23.2 | 2.0 | psu | | | | | | | | |
| 46 | ES_WATER | WCD | BA40 | 1999-04 | 04/12/1999 | | | | | | | | | | 19.4 | 2.0 | psu | | | | | | | | |
| 47 | ES_WATER | WCD | BA40 | 1999-07 | 07/13/1999 | | | | | | | | | | 27.6 | 2.0 | psu | | | | | | | | |
| 48 | ES_WATER | WCD | BA40 | 2000-02 | 02/01/2000 | | | | | | | | | | 26.6 | 2.0 | psu | | | | | | | | |
| 49 | ES_WATER | WCD | BA40 | 2000-07 | 07/11/2000 | | | | | | | | | | 27.3 | 2.0 | psu | | | | | | | | |
| 50 | ES_WATER | WCD | BA40 | 2001-02 | 02/06/2001 | | | | | | | | | | 28.5 | 2.0 | psu | | | | | | | | |
| 51 | ES_WATER | WCD | BA40 | 2001-08 | 07/31/2001 | | | | | | | | | | 30.1 | 2.0 | psu | | | | | | | | |
| 98 | ES_WATER | WCT | BA40 | 1993-03 | 03/02/1993 | | | | | | | | | | | | | | 17.0 | | o/oo | | 8.2 | 0.1 | pH |
| 99 | ES_WATER | WCT | BA40 | 1993-05 | 05/24/1993 | | | | | | | | | | | | | | 23.5 | | o/oo | | 7.9 | 0.1 | pH |
| 100 | ES_WATER | WCT | BA40 | 1993-09 | 09/13/1993 | | | | | | | | | | | | | | 25.5 | | o/oo | | 7.8 | 0.1 | pH |
| 101 | ES_WATER | WCT | BA40 | 1994-01 | 02/02/1994 | | | | | | | | | | | | | | 27.6 | 0.0 | o/oo | | 7.8 | 0.1 | pH |
| 102 | ES_WATER | WCT | BA40 | 1994-04 | 04/18/1994 | | | | | | | | | | | | | | 26.4 | 0.0 | o/oo | | 7.7 | 0.1 | pH |
| 103 | ES_WATER | WCT | BA40 | 1994-08 | 08/16/1994 | | | | | | | | | | | | | | 29.9 | 1.0 | o/oo | | 8.1 | 0.1 | pH |
| 104 | ES_WATER | WCT | BA40 | 1995-02 | 02/07/1995 | | | | | | | | | | | | | | 17.0 | | o/oo | | 7.7 | 0.1 | pH |
| 105 | ES_WATER | WCT | BA40 | 1995-04 | 04/24/1995 | | | | | | | | | | | | | | 16.0 | | o/oo | | 8.0 | 0.1 | pH |
| 106 | ES_WATER | WCT | BA40 | 1995-08 | 08/15/1995 | | | | | | | | | | | | | | 24.1 | | o/oo | | 7.9 | 0.1 | pH |
| 107 | ES_WATER | WCT | BA40 | 1996-02 | 02/06/1996 | | | | | | | | | | | | | | 20.1 | 1.0 | o/oo | | 7.8 | 0.0 | pH |
| 108 | ES_WATER | WCT | BA40 | 1996-04 | 05/02/1996 | | | | | | | | | | | | | | 16.1 | | o/oo | | 7.8 | 0.0 | pH |
| 109 | ES_WATER | WCT | BA40 | 1996-07 | 07/29/1996 | | | | | | | | | | | | | | 23.0 | | o/oo | | 7.9 | 0.0 | pH |
| 110 | ES_WATER | WCT | BA40 | 1997-01 | 01/22/1997 | | | | | | | | | | | | | | 11.4 | | o/oo | | 7.8 | 0.0 | pH |
| 111 | ES_WATER | WCT | BA40 | 1997-04 | 04/16/1997 | | | | | | | | | | | | | | | | | | 8.2 | 0.0 | pH |
| 112 | ES_WATER | WCT | BA40 | 1997-07 | 07/29/1997 | | | | | | | | | | | | | | 29.1 | | o/oo | | 7.7 | 0.0 | pH |
| 113 | ES_WATER | WCT | BA40 | 1998-02 | 01/27/1998 | | | | | | | | | | | | | | 19.0 | | o/oo | | 7.7 | 0.0 | pH |
| 114 | ES_WATER | WCT | BA40 | 1998-04 | 04/22/1998 | | | | | | | | | | | | | | 17.3 | | o/oo | | 8.4 | 0.0 | pH |
| 115 | ES_WATER | WCT | BA40 | 1998-07 | 07/20/1998 | | | | | | | | | | | | | | 20.7 | | o/oo | | 8.0 | 0.0 | pH |
| 116 | ES_WATER | WCT | BA40 | 1999-02 | 02/01/1999 | | | | | | | | | | | | | | 25.2 | | o/oo | | 7.8 | | pH |
| 117 | ES_WATER | WCT | BA40 | 1999-04 | 04/12/1999 | | | | | | | | | | | | | | 19.3 | | o/oo | | 8.3 | | pH |
| 118 | ES_WATER | WCT | BA40 | 1999-07 | 07/13/1999 | | | | | | | | | | | | | | 27.7 | | o/oo | | 8.0 | | pH |

**SFIA Mel Leong Plant**
**Industrial Plant**
**Table 6, Salinity Hardness data**

| | | | | | | | | | | | | |
|---|---|---|---|---|---|---|---|---|---|---|---|---|
| 119 | ES_WATER | WCT | BA40 | 2000-02 | 02/01/2000 | | | | 25.9 | 0.1 | o/oo | 7.8 | 0.0 | pH |
| 120 | ES_WATER | WCT | BA40 | 2000-07 | 07/11/2000 | | | | 27.6 | 0.1 | o/oo | 7.8 | 0.0 | pH |
| 121 | ES_WATER | WCT | BA40 | 2001-02 | 02/06/2001 | | | | 28.3 | 0.2 | o/oo | 8.2 | 0.0 | pH |
| 122 | ES_WATER | WCT | BA40 | 2001-08 | 07/31/2001 | | | | 29.8 | 0.2 | o/oo | 8.0 | 0.0 | pH |

# SFIA Mel Leong WQCP
# Industrial Plant
# Table 8. Dioxin Data

## San Francisco International Airport (SFIA) - Industrial Treatment Facility - Dioxin Data

| Permit or Agency | Analyte | Sample Date | Qualifier | Result, | Unit | Reporting Limit | MDL | RDL | CTR No. | EPA Method | TEF | TEQ |
|---|---|---|---|---|---|---|---|---|---|---|---|---|
| SFIA-Industrial | 2,3,7,8-TCDD | 27-Sep-02 | ND | 1.88 | pg/L | 1.88 | | | **16a** | 1613 | | |
| SFIA-Industrial | 1,2,3,7,8-PeCDD | 27-Sep-02 | ND | 2.99 | pg/L | 2.99 | | | **16b** | 1613 | | |
| SFIA-Industrial | 1,2,3,4,7,8-HxCDD | 27-Sep-02 | ND | 5.01 | pg/L | 5.01 | | | **16c** | 1613 | | |
| SFIA-Industrial | 1,2,3,6,7,8-HxCDD | 27-Sep-02 | ND | 4.89 | pg/L | 4.89 | | | **16d** | 1613 | | |
| SFIA-Industrial | 1,2,3,7,8,9-HxCDD | 27-Sep-02 | ND | 4.55 | pg/L | 4.55 | | | **16e** | 1613 | | |
| SFIA-Industrial | 1,2,3,4,6,7,8-HpCDD | 27-Sep-02 | ND | 3.60 | pg/L | 3.60 | | | **16f** | 1613 | | |
| SFIA-Industrial | OCDD | 27-Sep-02 | ND | 6.00 | pg/L | 6.00 | | | **16g** | 1613 | | |
| SFIA-Industrial | 2,3,7,8-TCDF | 27-Sep-02 | ND | 1.34 | pg/L | 1.34 | | | **16h** | 1613 | | |
| SFIA-Industrial | 1,2,3,7,8-PeCDF | 27-Sep-02 | ND | 3.12 | pg/L | 3.12 | | | **16i** | 1613 | | |
| SFIA-Industrial | 2,3,4,7,8-PeCDF | 27-Sep-02 | ND | 3.20 | pg/L | 3.20 | | | **16j** | 1613 | | |
| SFIA-Industrial | 1,2,3,4,7,8-HxCDF | 27-Sep-02 | ND | 1.46 | pg/L | 1.46 | | | **16k** | 1613 | | |
| SFIA-Industrial | 1,2,3,6,7,8-HxCDF | 27-Sep-02 | ND | 1.71 | pg/L | 1.71 | | | **16l** | 1613 | | |
| SFIA-Industrial | 2,3,4,6,7,8-HxCDF | 27-Sep-02 | ND | 1.68 | pg/L | 1.68 | | | **16m** | 1613 | | |
| SFIA-Industrial | 1,2,3,7,8,9-HxCDF | 27-Sep-02 | ND | 2.10 | pg/L | 2.10 | | | **16n** | 1613 | | |
| SFIA-Industrial | 1,2,3,4,6,7,8-HpCDF | 27-Sep-02 | ND | 1.80 | pg/L | 1.80 | | | **16o** | 1613 | | |
| SFIA-Industrial | 1,2,3,4,7,8,9-HpCDF | 27-Sep-02 | ND | 2.38 | pg/L | 2.38 | | | **16p** | 1613 | | |
| SFIA-Industrial | OCDF | 27-Sep-02 | ND | 6.46 | pg/L | 6.46 | | | **16q** | 1613 | | |
| SFIA-Industrial | WHO TEQ = 0.00 | 27-Sep-02 | ND | 0.00 | pg/L | | | | **16-TEQ** | 1613 | | |
| SFIA-Industrial | 2,3,7,8-TCDD | 3-Mar-03 | ND | 1.30 | pg/L | 1.3 | | | **16a** | 1613 | | |
| SFIA-Industrial | 1,2,3,7,8-PeCDD | 3-Mar-03 | ND | 2.29 | pg/L | 2.29 | | | **16b** | 1613 | | |
| SFIA-Industrial | 1,2,3,4,7,8-HxCDD | 3-Mar-03 | ND | 3.96 | pg/L | 3.96 | | | **16c** | 1613 | | |
| SFIA-Industrial | 1,2,3,6,7,8-HxCDD | 3-Mar-03 | ND | 4.17 | pg/L | 4.17 | | | **16d** | 1613 | | |
| SFIA-Industrial | 1,2,3,7,8,9-HxCDD | 3-Mar-03 | ND | 3.40 | pg/L | 3.4 | | | **16e** | 1613 | | |
| SFIA-Industrial | 1,2,3,4,6,7,8-HpCDD | 3-Mar-03 | ND | 3.15 | pg/L | 3.15 | | | **16f** | 1613 | | |
| SFIA-Industrial | OCDD | 3-Mar-03 | ND | 4.14 | pg/L | 4.14 | | | **16g** | 1613 | | |
| SFIA-Industrial | 2,3,7,8-TCDF | 3-Mar-03 | ND | 1.40 | pg/L | 1.4 | | | **16h** | 1613 | | |
| SFIA-Industrial | 1,2,3,7,8-PeCDF | 3-Mar-03 | ND | 2.16 | pg/L | 2.16 | | | **16i** | 1613 | | |
| SFIA-Industrial | 2,3,4,7,8-PeCDF | 3-Mar-03 | ND | 2.24 | pg/L | 2.24 | | | **16j** | 1613 | | |
| SFIA-Industrial | 1,2,3,4,7,8-HxCDF | 3-Mar-03 | ND | 0.79 | pg/L | 0.786 | | | **16k** | 1613 | | |
| SFIA-Industrial | 1,2,3,6,7,8-HxCDF | 3-Mar-03 | ND | 1.02 | pg/L | 1.02 | | | **16l** | 1613 | | |
| SFIA-Industrial | 2,3,4,6,7,8-HxCDF | 3-Mar-03 | ND | 1.05 | pg/L | 1.05 | | | **16m** | 1613 | | |
| SFIA-Industrial | 1,2,3,7,8,9-HxCDF | 3-Mar-03 | ND | 1.22 | pg/L | 1.22 | | | **16n** | 1613 | | |
| SFIA-Industrial | 1,2,3,4,6,7,8-HpCDF | 3-Mar-03 | ND | 1.13 | pg/L | 1.13 | | | **16o** | 1613 | | |
| SFIA-Industrial | 1,2,3,4,7,8,9-HpCDF | 3-Mar-03 | ND | 1.41 | pg/L | 1.41 | | | **16p** | 1613 | | |
| SFIA-Industrial | OCDF | 3-Mar-03 | ND | 3.37 | pg/L | 3.37 | | | **16q** | 1613 | | |
| SFIA-Industrial | WHO TEQ = 0.00 | 3-Mar-03 | ND | 0.00 | pg/L | | | | **16-TEQ** | 1613 | | |
| SFIA-Industrial | 2,3,7,8-TCDD | 25-Jul-03 | ND | 1.95 | pg/L | 1.95 | | | **16a** | 1613 | | |
| SFIA-Industrial | 1,2,3,7,8-PeCDD | 25-Jul-03 | ND | 2.55 | pg/L | 2.55 | | | **16b** | 1613 | | |
| SFIA-Industrial | 1,2,3,4,7,8-HxCDD | 25-Jul-03 | ND | 5.21 | pg/L | 5.21 | | | **16c** | 1613 | | |
| SFIA-Industrial | 1,2,3,6,7,8-HxCDD | 25-Jul-03 | ND | 5.08 | pg/L | 5.08 | | | **16d** | 1613 | | |
| SFIA-Industrial | 1,2,3,7,8,9-HxCDD | 25-Jul-03 | ND | 4.68 | pg/L | 4.68 | | | **16e** | 1613 | | |
| SFIA-Industrial | 1,2,3,4,6,7,8-HpCDD | 25-Jul-03 | ND | 3.17 | pg/L | 3.17 | | | **16f** | 1613 | | |
| SFIA-Industrial | OCDD | 25-Jul-03 | ND | 4.42 | pg/L | 4.42 | | | **16g** | 1613 | | |
| SFIA-Industrial | 2,3,7,8-TCDF | 25-Jul-03 | ND | 1.34 | pg/L | 1.34 | | | **16h** | 1613 | | |
| SFIA-Industrial | 1,2,3,7,8-PeCDF | 25-Jul-03 | ND | 3.85 | pg/L | 3.85 | | | **16i** | 1613 | | |
| SFIA-Industrial | 2,3,4,7,8-PeCDF | 25-Jul-03 | ND | 3.86 | pg/L | 3.86 | | | **16j** | 1613 | | |
| SFIA-Industrial | 1,2,3,4,7,8-HxCDF | 25-Jul-03 | ND | 0.72 | pg/L | 0.724 | | | **16k** | 1613 | | |
| SFIA-Industrial | 1,2,3,6,7,8-HxCDF | 25-Jul-03 | ND | 0.93 | pg/L | 0.926 | | | **16l** | 1613 | | |
| SFIA-Industrial | 2,3,4,6,7,8-HxCDF | 25-Jul-03 | ND | 1.05 | pg/L | 1.05 | | | **16m** | 1613 | | |
| SFIA-Industrial | 1,2,3,7,8,9-HxCDF | 25-Jul-03 | ND | 1.32 | pg/L | 1.32 | | | **16n** | 1613 | | |
| SFIA-Industrial | 1,2,3,4,6,7,8-HpCDF | 25-Jul-03 | ND | 1.33 | pg/L | 1.33 | | | **16o** | 1613 | | |
| SFIA-Industrial | 1,2,3,4,7,8,9-HpCDF | 25-Jul-03 | ND | 2.23 | pg/L | 2.23 | | | **16p** | 1613 | | |
| SFIA-Industrial | OCDF | 25-Jul-03 | ND | 5.36 | pg/L | 5.36 | | | **16q** | 1613 | | |
| SFIA-Industrial | WHO TEQ = 0.00 | 25-Jul-03 | ND | 0.00 | pg/L | | | | **16-TEQ** | 1613 | | |
| SFIA-Industrial | 2,3,7,8-TCDD | 3/30/2004 | ND | 4.20 | pg/L | 4.2 | | | **16a** | 1613 | | |
| SFIA-Industrial | 1,2,3,7,8-PeCDD | 3/30/2004 | ND | 8.30 | pg/L | 8.3 | | | **16b** | 1613 | | |
| SFIA-Industrial | 1,2,3,4,7,8-HxCDD | 3/30/2004 | ND | 10.00 | pg/L | 10 | | | **16c** | 1613 | | |
| SFIA-Industrial | 1,2,3,6,7,8-HxCDD | 3/30/2004 | ND | 9.60 | pg/L | 9.6 | | | **16d** | 1613 | | |
| SFIA-Industrial | 1,2,3,7,8,9-HxCDD | 3/30/2004 | ND | 9.20 | pg/L | 9.2 | | | **16e** | 1613 | | |
| SFIA-Industrial | 1,2,3,4,6,7,8-HpCDD | 3/30/2004 | ND | 9.30 | pg/L | 9.3 | | | **16f** | 1613 | | |
| SFIA-Industrial | OCDD | 3/30/2004 | ND | 11.00 | pg/L | 11 | | | **16g** | 1613 | | |
| SFIA-Industrial | 2,3,7,8-TCDF | 3/30/2004 | ND | 5.40 | pg/L | 5.4 | | | **16h** | 1613 | | |
| SFIA-Industrial | 1,2,3,7,8-PeCDF | 3/30/2004 | ND | 5.20 | pg/L | 5.2 | | | **16i** | 1613 | | |
| SFIA-Industrial | 2,3,4,7,8-PeCDF | 3/30/2004 | ND | 5.70 | pg/L | 5.7 | | | **16j** | 1613 | | |
| SFIA-Industrial | 1,2,3,4,7,8-HxCDF | 3/30/2004 | ND | 8.60 | pg/L | 8.6 | | | **16k** | 1613 | | |
| SFIA-Industrial | 1,2,3,6,7,8-HxCDF | 3/30/2004 | ND | 8.10 | pg/L | 8.1 | | | **16l** | 1613 | | |
| SFIA-Industrial | 2,3,4,6,7,8-HxCDF | 3/30/2004 | ND | 6.00 | pg/L | 6 | | | **16m** | 1613 | | |
| SFIA-Industrial | 1,2,3,7,8,9-HxCDF | 3/30/2004 | ND | 5.70 | pg/L | 5.7 | | | **16n** | 1613 | | |
| SFIA-Industrial | 1,2,3,4,6,7,8-HpCDF | 3/30/2004 | ND | 5.30 | pg/L | 5.3 | | | **16o** | 1613 | | |
| SFIA-Industrial | 1,2,3,4,7,8,9-HpCDF | 3/30/2004 | ND | 7.00 | pg/L | 7 | | | **16p** | 1613 | | |
| SFIA-Industrial | OCDF | 3/30/2004 | ND | 12.00 | pg/L | 12 | | | **16q** | 1613 | | |
| SFIA-Industrial | WHO TEQ = 0.00 | 3/30/2004 | ND | 0.00 | pg/L | | | | **16-TEQ** | 1613 | | |
| SFIA-Industrial | 2,3,7,8-TCDD | 8/24/2004 | ND | 2.01 | pg/L | 2.01 | | | **16a** | 1613 | | |
| SFIA-Industrial | 1,2,3,7,8-PeCDD | 8/24/2004 | ND | 6.48 | pg/L | 6.48 | | | **16b** | 1613 | | |

# SFIA Mel Leong WQCP
## Industrial Plant
## Table 8. Dioxin Data

| | | | | | | | | | | |
|---|---|---|---|---|---|---|---|---|---|---|
| SFIA-Industrial | 1,2,3,4,7,8-HxCDD | 8/24/2004 | ND | 7.83 | pg/L | 7.83 | **16c** | 1613 | | |
| SFIA-Industrial | 1,2,3,6,7,8-HxCDD | 8/24/2004 | ND | 7.49 | pg/L | 7.49 | **16d** | 1613 | | |
| SFIA-Industrial | 1,2,3,7,8,9-HxCDD | 8/24/2004 | ND | 7.66 | pg/L | 7.66 | **16e** | 1613 | | |
| SFIA-Industrial | 1,2,3,4,6,7,8-HpCDD | 8/24/2004 | ND | 8.55 | pg/L | 8.55 | **16f** | 1613 | | |
| SFIA-Industrial | OCDD | 8/24/2004 | ND | 9.77 | pg/L | 9.77 | **16g** | 1613 | | |
| SFIA-Industrial | 2,3,7,8-TCDF | 8/24/2004 | ND | 2.17 | pg/L | 2.17 | **16h** | 1613 | | |
| SFIA-Industrial | 1,2,3,7,8-PeCDF | 8/24/2004 | ND | 4.26 | pg/L | 4.26 | **16i** | 1613 | | |
| SFIA-Industrial | 2,3,4,7,8-PeCDF | 8/24/2004 | ND | 3.60 | pg/L | 3.6 | **16j** | 1613 | | |
| SFIA-Industrial | 1,2,3,4,7,8-HxCDF | 8/24/2004 | ND | 1.69 | pg/L | 1.69 | **16k** | 1613 | | |
| SFIA-Industrial | 1,2,3,6,7,8-HxCDF | 8/24/2004 | ND | 2.28 | pg/L | 2.28 | **16l** | 1613 | | |
| SFIA-Industrial | 2,3,4,6,7,8-HxCDF | 8/24/2004 | ND | 2.38 | pg/L | 2.38 | **16m** | 1613 | | |
| SFIA-Industrial | 1,2,3,7,8,9-HxCDF | 8/24/2004 | ND | 3.45 | pg/L | 3.45 | **16n** | 1613 | | |
| SFIA-Industrial | 1,2,3,4,6,7,8-HpCDF | 8/24/2004 | ND | 3.29 | pg/L | 3.29 | **16o** | 1613 | | |
| SFIA-Industrial | 1,2,3,4,7,8,9-HpCDF | 8/24/2004 | ND | 5.06 | pg/L | 5.06 | **16p** | 1613 | | |
| SFIA-Industrial | OCDF | 8/24/2004 | ND | 12.50 | pg/L | 12.5 | **16q** | 1613 | | |
| SFIA-Industrial | WHO TEQ = 0.00 | 8/24/2004 | ND | 0.00 | pg/L | | **16-TEQ** | 1613 | | |
| | | | | | | | | | | |
| SFIA-Industrial | 2,3,7,8-TCDD | 3/22/2005 | ND | 2.30 | pg/L | 2.3 | **16a** | 1613 | | |
| SFIA-Industrial | 1,2,3,7,8-PeCDD | 3/22/2005 | ND | 1.55 | pg/L | 1.55 | **16b** | 1613 | | |
| SFIA-Industrial | 1,2,3,4,7,8-HxCDD | 3/22/2005 | ND | 2.03 | pg/L | 2.03 | **16c** | 1613 | | |
| SFIA-Industrial | 1,2,3,6,7,8-HxCDD | 3/22/2005 | ND | 2.69 | pg/L | 2.69 | **16d** | 1613 | | |
| SFIA-Industrial | 1,2,3,7,8,9-HxCDD | 3/22/2005 | ND | 2.20 | pg/L | 2.2 | **16e** | 1613 | | |
| SFIA-Industrial | 1,2,3,4,6,7,8-HpCDD | 3/22/2005 | ND | 2.03 | pg/L | 2.03 | **16f** | 1613 | | |
| SFIA-Industrial | OCDD | 3/22/2005 | ND | 2.23 | pg/L | 2.23 | **16g** | 1613 | | |
| SFIA-Industrial | 2,3,7,8-TCDF | 3/22/2005 | ND | 1.42 | pg/L | 1.42 | **16h** | 1613 | | |
| SFIA-Industrial | 1,2,3,7,8-PeCDF | 3/22/2005 | ND | 2.91 | pg/L | 2.91 | **16i** | 1613 | | |
| SFIA-Industrial | 2,3,4,7,8-PeCDF | 3/22/2005 | ND | 2.83 | pg/L | 2.83 | **16j** | 1613 | | |
| SFIA-Industrial | 1,2,3,4,7,8-HxCDF | 3/22/2005 | ND | 0.62 | pg/L | 0.618 | **16k** | 1613 | | |
| SFIA-Industrial | 1,2,3,6,7,8-HxCDF | 3/22/2005 | ND | 0.55 | pg/L | 0.553 | **16l** | 1613 | | |
| SFIA-Industrial | 2,3,4,6,7,8-HxCDF | 3/22/2005 | ND | 0.52 | pg/L | 0.523 | **16m** | 1613 | | |
| SFIA-Industrial | 1,2,3,7,8,9-HxCDF | 3/22/2005 | ND | 0.74 | pg/L | 0.735 | **16n** | 1613 | | |
| SFIA-Industrial | 1,2,3,4,6,7,8-HpCDF | 3/22/2005 | ND | 0.92 | pg/L | 0.92 | **16o** | 1613 | | |
| SFIA-Industrial | 1,2,3,4,7,8,9-HpCDF | 3/22/2005 | ND | 1.17 | pg/L | 1.17 | **16p** | 1613 | | |
| SFIA-Industrial | OCDF | 3/22/2005 | ND | 2.32 | pg/L | 2.32 | **16q** | 1613 | | |
| SFIA-Industrial | WHO TEQ = 0.00 | 3/22/2005 | ND | 0.00 | pg/L | | **16-TEQ** | 1613 | | |
| | | | | | | | | | | |
| SFIA-Industrial | 2,3,7,8-TCDD | 9/19/2005 | ND | 10.00 | pg/L | 10 | **16a** | 1613 | | |
| SFIA-Industrial | 1,2,3,7,8-PeCDD | 9/19/2005 | ND | 50.00 | pg/L | 50 | **16b** | 1613 | | |
| SFIA-Industrial | 1,2,3,4,7,8-HxCDD | 9/19/2005 | ND | 50.00 | pg/L | 50 | **16c** | 1613 | | |
| SFIA-Industrial | 1,2,3,6,7,8-HxCDD | 9/19/2005 | ND | 50.00 | pg/L | 50 | **16d** | 1613 | | |
| SFIA-Industrial | 1,2,3,7,8,9-HxCDD | 9/19/2005 | ND | 50.00 | pg/L | 50 | **16e** | 1613 | | |
| SFIA-Industrial | 1,2,3,4,6,7,8-HpCDD | 9/19/2005 | ND | 50.00 | pg/L | 50 | **16f** | 1613 | | |
| SFIA-Industrial | OCDD | 9/19/2005 | ND | 100.00 | pg/L | 100 | **16g** | 1613 | | |
| SFIA-Industrial | 2,3,7,8-TCDF | 9/19/2005 | ND | 10.00 | pg/L | 10 | **16h** | 1613 | | |
| SFIA-Industrial | 1,2,3,7,8-PeCDF | 9/19/2005 | ND | 50.00 | pg/L | 50 | **16i** | 1613 | | |
| SFIA-Industrial | 2,3,4,7,8-PeCDF | 9/19/2005 | ND | 50.00 | pg/L | 50 | **16j** | 1613 | | |
| SFIA-Industrial | 1,2,3,4,7,8-HxCDF | 9/19/2005 | ND | 50.00 | pg/L | 50 | **16k** | 1613 | | |
| SFIA-Industrial | 1,2,3,6,7,8-HxCDF | 9/19/2005 | ND | 50.00 | pg/L | 50 | **16l** | 1613 | | |
| SFIA-Industrial | 2,3,4,6,7,8-HxCDF | 9/19/2005 | ND | 50.00 | pg/L | 50 | **16m** | 1613 | | |
| SFIA-Industrial | 1,2,3,7,8,9-HxCDF | 9/19/2005 | ND | 50.00 | pg/L | 50 | **16n** | 1613 | | |
| SFIA-Industrial | 1,2,3,4,6,7,8-HpCDF | 9/19/2005 | ND | 50.00 | pg/L | 50 | **16o** | 1613 | | |
| SFIA-Industrial | 1,2,3,4,7,8,9-HpCDF | 9/19/2005 | ND | 50.00 | pg/L | 50 | **16p** | 1613 | | |
| SFIA-Industrial | OCDF | 9/19/2005 | ND | 100.00 | pg/L | 100 | **16q** | 1613 | | |
| SFIA-Industrial | WHO TEQ = 0.00 | 9/19/2005 | ND | 0.00 | pg/L | | **16-TEQ** | 1613 | | |
| | | | | | | | | | | |
| SFIA-Industrial | 2,3,7,8-TCDD | 3/13/2006 | ND | 0.82 | pg/L | 0.823 | **16a** | 1613 | | |
| SFIA-Industrial | 1,2,3,7,8-PeCDD | 3/13/2006 | ND | 0.71 | pg/L | 0.711 | **16b** | 1613 | | |
| SFIA-Industrial | 1,2,3,4,7,8-HxCDD | 3/13/2006 | ND | 0.79 | pg/L | 0.788 | **16c** | 1613 | | |
| SFIA-Industrial | 1,2,3,6,7,8-HxCDD | 3/13/2006 | ND | 0.85 | pg/L | 0.849 | **16d** | 1613 | | |
| SFIA-Industrial | 1,2,3,7,8,9-HxCDD | 3/13/2006 | ND | 0.90 | pg/L | 0.9 | **16e** | 1613 | | |
| SFIA-Industrial | 1,2,3,4,6,7,8-HpCDD | 3/13/2006 | | 1.48 | pg/L | 0.798 | **16f** | 1613 | 0.01 | 0.0148 |
| SFIA-Industrial | OCDD | 3/13/2006 | | 6.37 | pg/L | 1.03 | **16g** | 1613 | 0.0001 | 0.000637 |
| SFIA-Industrial | 2,3,7,8-TCDF | 3/13/2006 | ND | 0.85 | pg/L | 0.834 | **16h** | 1613 | | |
| SFIA-Industrial | 1,2,3,7,8-PeCDF | 3/13/2006 | ND | 0.86 | pg/L | 0.859 | **16i** | 1613 | | |
| SFIA-Industrial | 2,3,4,7,8-PeCDF | 3/13/2006 | | 0.92 | pg/L | 0.806 | **16j** | 1613 | 0.5 | 0.4585 |
| SFIA-Industrial | 1,2,3,4,7,8-HxCDF | 3/13/2006 | ND | 0.64 | pg/L | 0.639 | **16k** | 1613 | | |
| SFIA-Industrial | 1,2,3,6,7,8-HxCDF | 3/13/2006 | ND | 0.67 | pg/L | 0.672 | **16l** | 1613 | | |
| SFIA-Industrial | 2,3,4,6,7,8-HxCDF | 3/13/2006 | ND | 0.66 | pg/L | 0.655 | **16m** | 1613 | | |
| SFIA-Industrial | 1,2,3,7,8,9-HxCDF | 3/13/2006 | ND | 0.67 | pg/L | 0.673 | **16n** | 1613 | | |
| SFIA-Industrial | 1,2,3,4,6,7,8-HpCDF | 3/13/2006 | ND | 0.74 | pg/L | 0.744 | **16o** | 1613 | | |
| SFIA-Industrial | 1,2,3,4,7,8,9-HpCDF | 3/13/2006 | ND | 0.75 | pg/L | 0.749 | **16p** | 1613 | | |
| SFIA-Industrial | OCDF | 3/13/2006 | | 1.49 | pg/L | 0.999 | **16q** | 1613 | 0.0001 | 0.000149 |
| SFIA-Industrial | WHO TEQ = 0.00 | 3/13/2006 | ND | 0.00 | pg/L | | **16-TEQ** | 1613 | | |

| | |
|---|---|
| Sum of TEQs (pg/L) | 0.474086 |
| Sum of TEQs (ug/L) | 4.74086E-07 |

# Table 7

San Francisco International Airport

**MEL LEONG TREATMENT PLANT**

## Ammonia-Nitrogen Levels

(Monthly Average Values)

| Month | Sanitary | | Industrial | |
|---|---|---|---|---|
| | ***M.E.C.*** *= 118 mg/L* | | ***M.E.C.*** *= 6.9 mg/L* | |
| | **Influent** | **Effluent** | **Influent** | **Effluent** |
| May-05 | 92 | 72.8 | 0.6 | 0.2 |
| Jun-05 | 98 | 53.6 | 1.2 | 0.2 |
| Jul-05 | 99 | 33.9 | 3.8 | 0.2 |
| Aug-05 | 98 | 37.6 | 0.8 | 0.3 |
| Sep-05 | 92 | 29.4 | 0.9 | 0.3 |
| Oct-05 | 93 | 51.2 | 1.7 | 0.3 |
| Nov-05 | 92 | 46.0 | 1.0 | 0.1 |
| Dec-05 | 83 | 38.4 | 2.4 | 0.4 |
| Jan-06 | 89 | 47.1 | 0.8 | 0.5 |
| Feb-06 | 85 | 48.1 | 0.3 | 0.1 |
| Mar-06 | 82 | 77.1 | 0.8 | 0.3 |
| Apr-06 | 93 | 85.6 | 2.3 | 1.0 |
| May-06 | 81 | 73.7 | 6.5 | 1.4 |
| Jun-06 | 86 | 56.9 | 1.5 | 0.8 |
| Jul-06 | 86 | 42.1 | 1.5 | 3.0 |
| Aug-06 | 92 | 55.5 | 7.9 | 5.6 |
| Sep-06 | 99 | 60.0 | 2.1 | 0.5 |
| Oct-06 | 98 | 98.0 | 1.4 | 0.4 |
| Nov-06 | 95 | 67.8 | 0.7 | 0.4 |
| Dec-06 | 87 | 74.5 | 0.3 | 0.4 |
| Jan-07 | 97 | 91.4 | 2.6 | 0.7 |
| Feb-07 | 92 | 93.1 | 1.0 | 0.6 |
| Mar-07 | 100 | 96.9 | 0.9 | 1.8 |
| Apr-07 | 103 | 91.1 | 1.0 | 0.9 |
| **2-year Average value** | **92.2** | **63.4** | **1.8** | **0.9** |

All values are in **mg/L**

## APPENDIX B

## RPA CALCULATIONS – SANITARY TREATMENT PLANT DATA

**Table 1** **Criteria** **(Table 1 in RPA spreadsheet)**
**Table 2** **Data Input for RPA** **(Table 2 in RPA spreadsheet)**
**Table 3** **Reasonable Potential Analysis Results** **(Table 3 in RPA spreadsheet)**
**Table 4** **Salinity and Hardness Data** **(Table 6 in RPA spreadsheet)**
**Table 5** **Dioxin-TEQ Data** **(Table 8 in RPA spreadsheet)**
**Table 6** **Total PAHs** **(Table 9 in RPA spreadsheet)**
**Table 7** **Ammonia-Nitrogen Levels, Monthly average May 2005 – April 2007**

**Is it a RB2 facility (Y/N)?** Y
**Hardness (mg/L CaCO3)** 400
**pH (s.u.)** 7.9

For Cd, Cr(III), Cu, Pb, Ni, Ag, Zn in freshwater

Note: DO NOT enter any value for the column that is NOT applicable
Note: Numbers in blue have formula in the cells - calculates values automatically
Note: Criteria for metals are expressed as total recoverable metal

| | | | Most Stringent Criteria | | | Basin Plan Criteria | | | | | | | | | | CTR Water Quality Criteria (ug/L) | | | | | | Factors for Metals Freshwater Criteria | | | | Conversion Factor (CF) | | | | Site-Specific Translators | |
|---|---|---|---|---|---|---|---|---|---|---|---|---|---|---|---|---|---|---|---|---|---|---|---|---|---|---|---|---|---|---|---|---|
| | | | | | | from Table 4-3 | | Freshwater (from Table 3-4) | | | | Saltwater (from Table 3-3) | | | | Freshwater | | Saltwater | | Human Health for consumption of: | | | | | | | | | | | | |
| # in CTR | PRIORITY POLLUTANTS | Lowest (most stringent) Criteria | Human Health Criterion | Lowest Chronic Criterion | Lowest Acute Criterion | Shallow Water | Deep Water (24-hr) | 4-day | 1-hr | 24-hr | Inst. Max | 4-day | 1-hr | 24-hr | Inst. Max | CMC (acute) | CCC (chronic) | CMC (acute) | CCC (chronic) | Water & organisms | Organisms only | ma | ba | mc | bc | freshwater acute criteria (MDEL) | freshwater chronic criteria (AMEL) | saltwater acute criteria (MDEL) | saltwater chronic criteria (AMEL) | Acute | Chronic |
| | | ug/L | ug/L | ug/L | ug/L | ug/L | ug/L | ug/L | ug/L | ug/L | ug/L | ug/L | ug/L | ug/L | ug/L | ug/L | ug/L | ug/L | ug/L | ug/L | ug/L | | | | | | | | | | |
| 1 | Antimony | 4300 | 4,300 | | | | | | | | | | | | | | | | | | 4,300 | | | | | | | | | | |
| 2 | Arsenic | 36 | | 36.00000 | 69.00000 | | | | | | | 36 | 69 | | | | | 69 | 36 | | | | | | | 1 | 1 | 1 | 1 | | |
| 3 | Beryllium | No Criteria | | | | | | | | | | | | | | | | | | | | | | | | | | | | | |
| 4 | Cadmium | 9.4 | | 9.35614 | 42.25352 | | | | | | | 9.4 | 42 | | | | | 42 | 9.4 | | | 1.128 | -3.6867 | 0.7852 | -2.715 | 0.886 | 0.851 | 0.994 | 0.994 | | |
| 5a | Chromium (III) | No Criteria | | | | | | | | | | | | | | | | | | | | 0.8190 | 3.6880 | 0.8190 | 1.5610 | 0.316 | 0.86 | | | | |
| 5b | Chromium (VI) | 50.4 | | 50.35247 | 1107.75428 | | | | | | | 50 | 1,108 | | | | | 1,108 | 50 | | | | | | | 0.982 | 0.962 | 0.993 | 0.993 | | |
| 6 | Copper | 4.2 | | 4.18919 | 5.45455 | | | | | | | 4.2 | 5.5 | | | | | 5.5 | 4.2 | | | 0.9422 | -1.7000 | 0.8545 | -1.7020 | 0.96 | 0.96 | 0.83 | 0.83 | 0.88 | 0.74 |
| 7 | Lead | 8.5 | | 8.51735 | 220.82019 | | | | | | | 8.5 | 221 | | | | | 221 | 8.5 | | | 1.2730 | -1.4600 | 1.2730 | -4.7050 | 0.589 | 0.589 | 0.951 | 0.951 | | |
| 8 | Mercury (303d listed) | 0.025 | 0.051 | 0.02500 | 2.10000 | | | | | | | 0.025 | 2.1 | | | | | | | | 0.051 | | | | | | | | | | |
| 9 | Nickel (303d listed) | 12.6 | 4,600 | 12.61538 | 87.05882 | | | | | | | 13 | 87 | | | | | 87 | 13 | | 4,600 | 0.8460 | 2.2550 | 0.8460 | 0.0584 | 0.998 | 0.997 | 0.99 | 0.99 | 0.85 | 0.65 |
| 10 | Selenium | 5 | | 5.00000 | 20.00000 | | | | | | | | | | | | | 20 | 5 | | | | | | | | | 0.998 | 0.88 | | |
| 11 | Silver | 2.2 | | | 2.23529 | | | | | | | | 2.2 | | | | | 2.2 | | | | 1.7200 | -6.5200 | | | 0.85 | | 0.85 | | | |
| 12 | Thallium | 6.3 | 6.30000 | | | | | | | | | | | | | | | | | | 6.3 | | | | | | | | | | |
| 13 | Zinc | 85.6 | | 85.62368 | 95.13742 | | | | | | | 86 | 95 | | | | | 95 | 86 | | | 0.8473 | 0.8840 | 0.8473 | 0.8840 | 0.978 | 0.986 | 0.946 | 0.946 | | |
| 14 | Cyanide | 1 | 220,000 | 1.00000 | 1.00000 | | | | | | | | | | | | | 1.0 | 1.0 | | 220,000 | | | | | | | | | | |
| 15 | Asbestos | No Criteria | | | | | | | | | | | | | | | | | | | | | | | | | | | | | |
| 16 | 2,3,7,8-TCDD (303d listed) | 0.000000014 | 0.000000014 | | | | | | | | | | | | | | | | | | 0.000000014 | | | | | | | | | | |
| 16-TEQ | Dioxin TEQ (303d listed) | 0.000000014 | 0.000000014 | | | | | | | | | | | | | | | | | | 0.000000014 | | | | | | | | | | |
| 17 | Acrolein | 780 | 780 | | | | | | | | | | | | | | | | | | 780 | | | | | | | | | | |
| 18 | Acrylonitrile | 0.66 | 0.66000 | | | | | | | | | | | | | | | | | | 0.66 | | | | | | | | | | |
| 19 | Benzene | 71 | 71 | | | | | | | | | | | | | | | | | | 71 | | | | | | | | | | |
| 20 | Bromoform | 360 | 360 | | | | | | | | | | | | | | | | | | 360 | | | | | | | | | | |
| 21 | Carbon Tetrachloride | 4.4 | 4.40000 | | | | | | | | | | | | | | | | | | 4.4 | | | | | | | | | | |
| 22 | Chlorobenzene | 21000 | 21,000 | | | | | | | | | | | | | | | | | | 21,000 | | | | | | | | | | |
| 23 | Chlorodibromomethane | 34 | 34 | | | | | | | | | | | | | | | | | | 34 | | | | | | | | | | |
| 24 | Chloroethane | No Criteria | | | | | | | | | | | | | | | | | | | | | | | | | | | | | |
| 25 | 2-Chloroethylvinyl Ether | No Criteria | | | | | | | | | | | | | | | | | | | | | | | | | | | | | |
| 26 | Chloroform | No Criteria | | | | | | | | | | | | | | | | | | | | | | | | | | | | | |
| 27 | Dichlorobromomethane | 46 | 46 | | | | | | | | | | | | | | | | | | 46 | | | | | | | | | | |
| 28 | 1,1-Dichloroethane | No Criteria | | | | | | | | | | | | | | | | | | | | | | | | | | | | | |
| 29 | 1,2-Dichloroethane | 99 | 99 | | | | | | | | | | | | | | | | | | 99 | | | | | | | | | | |
| 30 | 1,1-Dichloroethylene | 3.2 | 3.20000 | | | | | | | | | | | | | | | | | | 3.2 | | | | | | | | | | |
| 31 | 1,2-Dichloropropane | 39 | 39 | | | | | | | | | | | | | | | | | | 39 | | | | | | | | | | |
| 32 | 1,3-Dichloropropylene | 1700 | 1,700 | | | | | | | | | | | | | | | | | | 1,700 | | | | | | | | | | |
| 33 | Ethylbenzene | 29000 | 29,000 | | | | | | | | | | | | | | | | | | 29,000 | | | | | | | | | | |
| 34 | Methyl Bromide | 4000 | 4,000 | | | | | | | | | | | | | | | | | | 4,000 | | | | | | | | | | |
| 35 | Methyl Chloride | No Criteria | | | | | | | | | | | | | | | | | | | | | | | | | | | | | |
| 36 | Methylene Chloride | 1600 | 1,600 | | | | | | | | | | | | | | | | | | 1,600 | | | | | | | | | | |
| 37 | 1,1,2,2-Tetrachloroethane | 11 | 11 | | | | | | | | | | | | | | | | | | 11 | | | | | | | | | | |
| 38 | Tetrachloroethylene | 8.85 | 8.85000 | | | | | | | | | | | | | | | | | | 8.85 | | | | | | | | | | |
| 39 | Toluene | 200000 | 200,000 | | | | | | | | | | | | | | | | | | 200,000 | | | | | | | | | | |
| 40 | 1,2-Trans-Dichloroethylene | 140000 | 140,000 | | | | | | | | | | | | | | | | | | 140,000 | | | | | | | | | | |
| 41 | 1,1,1-Trichloroethane | No Criteria | | | | | | | | | | | | | | | | | | | | | | | | | | | | | |
| 42 | 1,1,2-Trichloroethane | 42 | 42 | | | | | | | | | | | | | | | | | | 42 | | | | | | | | | | |
| 43 | Trichloroethylene | 81 | 81 | | | | | | | | | | | | | | | | | | 81 | | | | | | | | | | |
| 44 | Vinyl Chloride | 525 | 525 | | | | | | | | | | | | | | | | | | 525 | | | | | | | | | | |
| 45 | Chlorophenol | 400 | 400 | | | | | | | | | | | | | | | | | | 400 | | | | | | | | | | |
| 46 | 2,4-Dichlorophenol | 790 | 790 | | | | | | | | | | | | | | | | | | 790 | | | | | | | | | | |
| 47 | 2,4-Dimethylphenol | 2300 | 2,300 | | | | | | | | | | | | | | | | | | 2,300 | | | | | | | | | | |
| 48 | 2-Methyl-4,6-Dinitrophenol | 765 | 765 | | | | | | | | | | | | | | | | | | 765 | | | | | | | | | | |
| 49 | 2,4-Dinitrophenol | 14000 | 14,000 | | | | | | | | | | | | | | | | | | 14,000 | | | | | | | | | | |
| 50 | 2-Nitrophenol | No Criteria | | | | | | | | | | | | | | | | | | | | | | | | | | | | | |
| 51 | 4-Nitrophenol | No Criteria | | | | | | | | | | | | | | | | | | | | | | | | | | | | | |
| 52 | 3-Methyl-4-Chlorophenol | No Criteria | | | | | | | | | | | | | | | | | | | | | | | | | | | | | |
| 53 | Pentachlorophenol | 7.9 | 8.20000 | 7.90000 | 13.00000 | | | | | | | | | | | | | 13 | 7.9 | | 8.2 | | | | | | | | | | |
| 54 | Phenol | 4600000 | 4,600,000 | | | | | | | | | | | | | | | | | | 4,600,000 | | | | | | | | | | |
| 55 | 2,4,6-Trichlorophenol | 6.5 | 6.50000 | | | | | | | | | | | | | | | | | | 6.5 | | | | | | | | | | |
| 56 | Acenaphthene | 2700 | 2,700 | | | | | | | | | | | | | | | | | | 2,700 | | | | | | | | | | |
| 57 | Acenephthylene | No Criteria | | | | | | | | | | | | | | | | | | | | | | | | | | | | | |
| 58 | Anthracene | 110000 | 110,000 | | | | | | | | | | | | | | | | | | 110,000 | | | | | | | | | | |
| 59 | Benzidine | 0.00054 | 0.00054 | | | | | | | | | | | | | | | | | | 0.00054 | | | | | | | | | | |
| 60 | Benzo(a)Anthracene | 0.049 | 0.04900 | | | | | | | | | | | | | | | | | | 0.049 | | | | | | | | | | |
| 61 | Benzo(a)Pyrene | 0.049 | 0.04900 | | | | | | | | | | | | | | | | | | 0.049 | | | | | | | | | | |
| 62 | Benzo(b)Fluoranthene | 0.049 | 0.04900 | | | | | | | | | | | | | | | | | | 0.049 | | | | | | | | | | |
| 63 | Benzo(ghi)Perylene | No Criteria | | | | | | | | | | | | | | | | | | | | | | | | | | | | | |
| 64 | Benzo(k)Fluoranthene | 0.049 | 0.04900 | | | | | | | | | | | | | | | | | | 0.049 | | | | | | | | | | |
| 65 | Bis(2-Chloroethoxy)Methane | No Criteria | | | | | | | | | | | | | | | | | | | | | | | | | | | | | |
| 66 | Bis(2-Chloroethyl)Ether | 1.4 | 1.40000 | | | | | | | | | | | | | | | | | | 1.4 | | | | | | | | | | |
| 67 | Bis(2-Chloroisopropyl)Ether | 170000 | 170,000 | | | | | | | | | | | | | | | | | | 170,000 | | | | | | | | | | |
| 68 | Bis(2-Ethylhexyl)Phthalate | 5.9 | 5.90000 | | | | | | | | | | | | | | | | | | 5.9 | | | | | | | | | | |
| 69 | 4-Bromophenyl Phenyl Ether | No Criteria | | | | | | | | | | | | | | | | | | | | | | | | | | | | | |

| | | | Most Stringent Criteria | | | Basin Plan Criteria | | | | | | | | | | CTR Water Quality Criteria (ug/L) | | | | | | | | | | | | | | | |
|---|---|---|---|---|---|---|---|---|---|---|---|---|---|---|---|---|---|---|---|---|---|---|---|---|---|---|---|---|---|---|---|
| | | | | | | from Table 4-3 | | Freshwater (from Table 3-4) | | | | Saltwater (from Table 3-3) | | | | Freshwater | | Saltwater | | Human Health for consumption of: | | Factors for Metals Freshwater Criteria | | | | Conversion Factor (CF) | | | | Site-Specific Translators | |
| # in CTR | PRIORITY POLLUTANTS | *Lowest (most stringent) Criteria* | Human Health Criterion | Lowest Chronic Criterion | Lowest Acute Criterion | Shallow Water | Deep Water (24-hr) | 4-day | 1-hr | 24-hr | Inst. Max | 4-day | 1-hr | 24-hr | Inst. Max | CMC (acute) | CCC (chronic) | CMC (acute) | CCC (chronic) | Water & organisms | Organisms only | ma | ba | mc | bc | freshwater acute criteria (MDEL) | freshwater chronic criteria (AMEL) | saltwater acute criteria (MDEL) | saltwater chronic criteria (AMEL) | Acute | Chronic |
| | | ug/L | ug/L | ug/L | ug/L | ug/L | ug/L | ug/L | ug/L | ug/L | ug/L | ug/L | ug/L | ug/L | ug/L | ug/L | ug/L | ug/L | ug/L | ug/L | ug/L | | | | | | | | | | |
| 70 | Butylbenzyl Phthalate | 5200 | 5,200 | | | | | | | | | | | | | | | | | | 5,200 | | | | | | | | | | |
| 71 | 2-Chloronaphthalene | 4300 | 4,300 | | | | | | | | | | | | | | | | | | 4,300 | | | | | | | | | | |
| 72 | 4-Chlorophenyl Phenyl Ether | No Criteria | | | | | | | | | | | | | | | | | | | | | | | | | | | | | |
| 73 | Chrysene | 0.049 | 0.04900 | | | | | | | | | | | | | | | | | | 0.049 | | | | | | | | | | |
| 74 | Dibenzo(a,h)Anthracene | 0.049 | 0.04900 | | | | | | | | | | | | | | | | | | 0.049 | | | | | | | | | | |
| 75 | 1,2-Dichlorobenzene | 17000 | 17,000 | | | | | | | | | | | | | | | | | | 17,000 | | | | | | | | | | |
| 76 | 1,3-Dichlorobenzene | 2600 | 2,600 | | | | | | | | | | | | | | | | | | 2,600 | | | | | | | | | | |
| 77 | 1,4-Dichlorobenzene | 2600 | 2,600 | | | | | | | | | | | | | | | | | | 2,600 | | | | | | | | | | |
| 78 | 3,3'-Dichlorobenzidine | 0.077 | 0.07700 | | | | | | | | | | | | | | | | | | 0.077 | | | | | | | | | | |
| 79 | Diethyl Phthalate | 120000 | 120,000 | | | | | | | | | | | | | | | | | | 120,000 | | | | | | | | | | |
| 80 | Dimethyl Phthalate | 2900000 | 2,900,000 | | | | | | | | | | | | | | | | | | 2,900,000 | | | | | | | | | | |
| 81 | Di-n-Butyl Phthalate | 12000 | 12,000 | | | | | | | | | | | | | | | | | | 12,000 | | | | | | | | | | |
| 82 | 2,4-Dinitrotoluene | 9.1 | 9.10000 | | | | | | | | | | | | | | | | | | 9.1 | | | | | | | | | | |
| 83 | 2,6-Dinitrotoluene | No Criteria | | | | | | | | | | | | | | | | | | | | | | | | | | | | | |
| 84 | Di-n-Octyl Phthalate | No Criteria | | | | | | | | | | | | | | | | | | | | | | | | | | | | | |
| 85 | 1,2-Diphenylhydrazine | 0.54 | 0.54000 | | | | | | | | | | | | | | | | | | 0.54 | | | | | | | | | | |
| 86 | Fluoranthene | 370 | 370 | | | | | | | | | | | | | | | | | | 370 | | | | | | | | | | |
| 87 | Fluorene | 14000 | 14,000 | | | | | | | | | | | | | | | | | | 14,000 | | | | | | | | | | |
| 88 | Hexachlorobenzene | 0.00077 | 0.00077 | | | | | | | | | | | | | | | | | | 0.00077 | | | | | | | | | | |
| 89 | Hexachlorobutadiene | 50 | 50 | | | | | | | | | | | | | | | | | | 50 | | | | | | | | | | |
| 90 | Hexachlorocyclopentadiene | 17000 | 17,000 | | | | | | | | | | | | | | | | | | 17,000 | | | | | | | | | | |
| 91 | Hexachloroethane | 8.9 | 8.90000 | | | | | | | | | | | | | | | | | | 8.9 | | | | | | | | | | |
| 92 | Indeno(1,2,3-cd) Pyrene | 0.049 | 0.04900 | | | | | | | | | | | | | | | | | | 0.049 | | | | | | | | | | |
| 93 | Isophorone | 600 | 600 | | | | | | | | | | | | | | | | | | 600 | | | | | | | | | | |
| 94 | naphthalene | No Criteria | | | | | | | | | | | | | | | | | | | | | | | | | | | | | |
| 95 | Nitrobenzene | 1900 | 1,900 | | | | | | | | | | | | | | | | | | 1,900 | | | | | | | | | | |
| 96 | N-Nitrosodimethylamine | 8.1 | 8.10000 | | | | | | | | | | | | | | | | | | 8.1 | | | | | | | | | | |
| 97 | N-Nitrosodi-n-Propylamine | 1.4 | 1.40000 | | | | | | | | | | | | | | | | | | 1.4 | | | | | | | | | | |
| 98 | N-Nitrosodiphenylamine | 16 | 16 | | | | | | | | | | | | | | | | | | 16 | | | | | | | | | | |
| 99 | Phenanthrene | No Criteria | | | | | | | | | | | | | | | | | | | | | | | | | | | | | |
| 100 | Pyrene | 11000 | 11,000 | | | | | | | | | | | | | | | | | | 11,000 | | | | | | | | | | |
| 101 | 1,2,4-Trichlorobenzene | No Criteria | | | | | | | | | | | | | | | | | | | | | | | | | | | | | |
| 102 | Aldrin | 0.00014 | 0.00014 | | 1.30000 | | | | | | | | | | | | | 1.3 | | | 0.00014 | | | | | | | | | | |
| 103 | alpha-BHC | 0.013 | 0.01300 | | | | | | | | | | | | | | | | | | 0.013 | | | | | | | | | | |
| 104 | beta-BHC | 0.046 | 0.04600 | | | | | | | | | | | | | | | | | | 0.046 | | | | | | | | | | |
| 105 | gamma-BHC | 0.063 | 0.06300 | | 0.16000 | | | | | | | | | | | | | 0.16 | | | 0.063 | | | | | | | | | | |
| 106 | delta-BHC | No Criteria | | | | | | | | | | | | | | | | | | | | | | | | | | | | | |
| 107 | Chlordane (303d listed) | 0.00059 | 0.00059 | 0.00400 | 0.09000 | | | | | | | | | | | | | 0.09 | 0.004 | | 0.00059 | | | | | | | | | | |
| 108 | 4,4-DDT (303d listed) | 0.00059 | 0.00059 | 0.001 | 0.13 | | | | | | | | | | | | | 0.13 | 0.001 | | 0.00059 | | | | | | | | | | |
| 109 | 4,4-DDE | 0.00059 | 0.00059 | | | | | | | | | | | | | | | | | | 0.00059 | | | | | | | | | | |
| 110 | 4,4-DDD | 0.00084 | 0.00084 | | | | | | | | | | | | | | | | | | 0.00084 | | | | | | | | | | |
| 111 | Dieldrin (303d listed) | 0.00014 | 0.00014 | 0.0019 | 0.71 | | | | | | | | | | | | | 0.71 | 0.0019 | | 0.00014 | | | | | | | | | | |
| 112 | alpha-Endosulfan | 0.0087 | 240 | 0.00870 | 0.03400 | | | | | | | | | | | | | 0.034 | 0.0087 | | 240 | | | | | | | | | | |
| 113 | beta-Endosulfan | 0.0087 | 240 | 0.00870 | 0.03400 | | | | | | | | | | | | | 0.034 | 0.0087 | | 240 | | | | | | | | | | |
| 114 | Endosulfan Sulfate | 240 | 240 | | | | | | | | | | | | | | | | | | 240 | | | | | | | | | | |
| 115 | Endrin | 0.0023 | 0.81000 | 0.0023 | 0.037 | | | | | | | | | | | | | 0.037 | 0.0023 | | 0.81 | | | | | | | | | | |
| 116 | Endrin Aldehyde | 0.81 | 0.81000 | | | | | | | | | | | | | | | | | | 0.81 | | | | | | | | | | |
| 117 | Heptachlor | 0.00021 | 0.00021 | 0.0036 | 0.053 | | | | | | | | | | | | | 0.053 | 0.0036 | | 0.00021 | | | | | | | | | | |
| 118 | Heptachlor Epoxide | 0.00011 | 0.00011 | 0.0036 | 0.053 | | | | | | | | | | | | | 0.053 | 0.0036 | | 0.00011 | | | | | | | | | | |
| 119-125 | PCBs sum (303d listed) | 0.00017 | 0.00017 | 0.03000 | | | | | | | | | | | | | | | 0.03 | | 0.00017 | | | | | | | | | | |
| 126 | Toxaphene | 0.0002 | 0.00075 | 0.00020 | 0.21000 | | | | | | | | | | | | | 0.21 | 0.0002 | | 0.00075 | | | | | | | | | | |
| | Ammonia measured as N (3) | 1500 | | 1500 | 15000 | | | | | | | 1,500 | 15,000 | | | | | | | | | | | | | | | | | | |
| | Tributyltin | 0.01 | | 0.01 | | | | | | | | 0.010 | | | | | | | | | | | | | | | | | | | |
| | Total PAHs | 15 | | 15.00000 | | | | | | | | | | 15 | | | | | | | | | | | | | | | | | |

Notes:
1) Receiving water is Marine based on salinity data from BA40 and BB15
2) pH is mean of results from monitoring locations BA40 and BB15.
3) Criteria in Basin Plan, measured at the Oyster Point Regional Monitoring Program station

**SFIA - Mel Leong WQCP**
**Sanitary Treatment Plant**
**Table 2. Data Input for RPA**

| | | EFFLUENT DATA | | | | | BACKGROUND DATA (B) | | | | | |
|---|---|---|---|---|---|---|---|---|---|---|---|---|
| *CTR No.* | *Constituent name* | *Effluent Data Available (Y/N)?* | *Are all data points non-detects (Y/N)?* | *If all data points ND Enter the min detection limit (MDL) (ug/L)* | *Enter the pollutant effluent detected max conc (ug/L)* | Input Check | *B Available (Y/N)?* | *Are all B non-detects (Y/N)?* | *If all data points ND Enter the min detection limit (MDL) (ug/L)* | *Enter the Detected Maximum Background Conc* | Input Check | *7) Review other information in the SIP page 4. If information is unavailable or insufficient: 8) the RWQCB shall establish interim monitoring requirements.* |
| 1 | Antimony | Y | N | | 0.41 | | Y | N | | 1.8 | | |
| 2 | Arsenic | Y | N | | 5 | | Y | N | | 2.46 | | |
| 3 | Beryllium | Y | Y | 0.5 | | | Y | N | | 0.215 | | No Criteria |
| 4 | Cadmium | Y | N | | 0.58 | | Y | N | | 0.1268 | | |
| 5a | Chromium (III) | N | | | | | N | | | | | |
| 5b | Chromium (VI) | Y | N | | 6.77 | | Y | N | | 4.4 | | |
| 6 | Copper | Y | N | | 13.95 | | Y | N | | 2.45 | | |
| 7 | Lead | Y | N | | 5 | | Y | N | | 0.8040 | | |
| 8 | Mercury (303d listed) | Y | N | | 0.0867 | | Y | N | | 0.0086 | | |
| 9 | Nickel (303d listed) | Y | N | | 14.91 | | Y | N | | 3.73 | | |
| 10 | Selenium | Y | N | | 1.563 | | Y | N | | 0.39 | | |
| 11 | Silver | Y | N | | 0.5 | | Y | N | | 0.052 | | |
| 12 | Thallium | Y | N | | 1.3 | | Y | N | | 0.21 | | |
| 13 | Zinc | Y | N | | 71.4 | | Y | N | | 5.1 | | |
| 14 | Cyanide | Y | N | | 15.8 | | Y | Y | 0.4 | | | |
| 15 | Asbestos | N | | | | | N | | | | | No Criteria |
| 16 | 2,3,7,8-TCDD (303d listed) | Y | Y | 9.80E-07 | | | N | | | | | |
| 16-TEQ | Dioxin TEQ (303d listed) | Y | Y | 3.55E-07 | | | Y | N | | 7.10E-08 | | |
| 17 | Acrolein | Y | Y | 5 | | | Y | Y | 0.5 | | | |
| 18 | Acrylonitrile | Y | Y | 5 | | | Y | N | | 0.03 | | |
| 19 | Benzene | Y | Y | 0.5 | | | Y | Y | 0.05 | | | |
| 20 | Bromoform | Y | N | | 0.6 | | Y | Y | 0.5 | | | |
| 21 | Carbon Tetrachloride | Y | Y | 0.5 | | | Y | N | | 0.06 | | |
| 22 | Chlorobenzene | Y | Y | 0.5 | | | Y | Y | 0.5 | | | |
| 23 | Chlorodibromomethane | Y | N | | 1 | | Y | Y | 0.05 | | | |
| 24 | Chloroethane | Y | N | | 0.075 | | Y | Y | 0.5 | | | No Criteria |
| 25 | 2-Chloroethylvinyl Ether | Y | Y | 20 | | | Y | Y | 0.5 | | | No Criteria |
| 26 | Chloroform | Y | N | | 11 | | Y | Y | 0.5 | | | No Criteria |
| 27 | Dichlorobromomethane | Y | N | | 5 | | Y | Y | 0.05 | | | |
| 28 | 1,1-Dichloroethane | Y | Y | 0.5 | | | Y | Y | 0.05 | | | No Criteria |
| 29 | 1,2-Dichloroethane | Y | Y | 0.5 | | | Y | N | | 0.04 | | |
| 30 | 1,1-Dichloroethylene | Y | Y | 0.5 | | | Y | Y | 0.5 | | | |
| 31 | 1,2-Dichloropropane | Y | Y | 0.5 | | | Y | Y | 0.05 | | | |
| 32 | 1,3-Dichloropropylene | Y | Y | 0.5 | | | N | | | | | |
| 33 | Ethylbenzene | Y | Y | 0.5 | | | Y | Y | 0.5 | | | |
| 34 | Methyl Bromide | Y | Y | 0.5 | | | Y | Y | 0.5 | | | |
| 35 | Methyl Chloride | Y | Y | 0.5 | | | Y | Y | 0.5 | | | No Criteria |
| 36 | Methylene Chloride | Y | N | | 0.485 | | Y | N | | 0.5 | | |
| 37 | 1,1,2,2-Tetrachloroethane | Y | Y | 0.5 | | | Y | Y | 0.05 | | | |
| 38 | Tetrachloroethylene | Y | Y | 0.5 | | | Y | Y | 0.05 | | | |
| 39 | Toluene | Y | N | | 0.46 | | Y | Y | 0.3 | | | |
| 40 | 1,2-Trans-Dichloroethylene | Y | Y | 0.5 | | | Y | Y | 0.5 | | | |
| 41 | 1,1,1-Trichloroethane | Y | Y | 0.5 | | | Y | Y | 0.5 | | | No Criteria |
| 42 | 1,1,2-Trichloroethane | Y | Y | 0.5 | | | Y | Y | 0.05 | | | |
| 43 | Trichloroethylene | Y | Y | 0.5 | | | Y | Y | 0.5 | | | |
| 44 | Vinyl Chloride | Y | Y | 0.5 | | | Y | Y | 0.5 | | | |
| 45 | Chlorophenol | Y | Y | 1.05 | | | Y | Y | 1.2 | | | |
| 46 | 2,4-Dichlorophenol | Y | Y | 1.2 | | | Y | Y | 1.3 | | | |
| 47 | 2,4-Dimethylphenol | Y | Y | 1 | | | Y | Y | 1.3 | | | |
| 48 | 2-Methyl-4,6-Dinitrophenol | Y | Y | 1 | | | Y | Y | 1.2 | | | |
| 49 | 2,4-Dinitrophenol | Y | Y | 3.89 | | | Y | Y | 0.7 | | | |
| 50 | 2-Nitrophenol | Y | Y | 1.86 | | | Y | Y | 1.3 | | | No Criteria |
| 51 | 4-Nitrophenol | Y | Y | 1.96 | | | Y | Y | 1.6 | | | No Criteria |
| 52 | 3-Methyl-4-Chlorophenol | Y | Y | 1 | | | Y | Y | 1.1 | | | No Criteria |
| 53 | Pentachlorophenol | Y | Y | 1.04 | | | Y | Y | 1 | | | |
| 54 | Phenol | Y | Y | 1 | | | Y | Y | 1.3 | | | |
| 55 | 2,4,6-Trichlorophenol | Y | Y | 1.88 | | | Y | Y | 1.3 | | | |
| 56 | Acenaphthene | Y | Y | 0.52 | | | Y | N | | 0.0015 | | |
| 57 | Acenephthylene | Y | Y | 0.39 | | | Y | N | | 0.00053 | | No Criteria |
| 58 | Anthracene | Y | Y | 0.02 | | | Y | N | | 0.0005 | | |
| 59 | Benzidine | Y | Y | 2.5 | | | Y | Y | 0.0015 | | | |
| 60 | Benzo(a)Anthracene | Y | Y | 0.05 | | | Y | N | | 0.0053 | | |
| 61 | Benzo(a)Pyrene | Y | Y | 0.05 | | | Y | N | | 0.00029 | | |
| 62 | Benzo(b)Fluoranthene | Y | Y | 0.1 | | | Y | N | | 0.0046 | | |
| 63 | Benzo(ghi)Perylene | Y | Y | 0.09 | | | Y | N | | 0.0027 | | No Criteria |
| 64 | Benzo(k)Fluoranthene | Y | Y | 0.05 | | | Y | N | | 0.0015 | | |
| 65 | Bis(2-Chloroethoxy)Methane | Y | Y | 0.97 | | | Y | Y | 0.3 | | | No Criteria |
| 66 | Bis(2-Chloroethyl)Ether | Y | Y | 0.97 | | | Y | Y | 0.3 | | | |
| 67 | Bis(2-Chloroisopropyl)Ether | Y | Y | 0.81 | | | N | | | | | |
| 68 | Bis(2-Ethylhexyl)Phthalate | Y | Y | 0.69 | | | Y | Y | 0.5 | | | |
| 69 | 4-Bromophenyl Phenyl Ether | Y | Y | 1 | | | Y | Y | 0.23 | | | No Criteria |
| 70 | Butylbenzyl Phthalate | Y | Y | 0.26 | | | Y | Y | 0.52 | | | |
| 71 | 2-Chloronaphthalene | Y | Y | 1 | | | Y | Y | 0.3 | | | |
| 72 | 4-Chlorophenyl Phenyl Ether | Y | Y | 0.89 | | | Y | Y | 0.3 | | | No Criteria |
| 73 | Chrysene | Y | Y | 0.9 | | | Y | N | | 0.0024 | | |
| 74 | Dibenzo(a,h)Anthracene | Y | Y | 0.09 | | | Y | N | | 0.00064 | | |
| 75 | 1,2-Dichlorobenzene | Y | Y | 0.5 | | | Y | Y | 0.8 | | | |
| 76 | 1,3-Dichlorobenzene | Y | Y | 0.5 | | | Y | Y | 0.8 | | | |
| 77 | 1,4-Dichlorobenzene | Y | N | | 0.13 | | Y | Y | 0.8 | | | |
| 78 | 3,3'-Dichlorobenzidine | Y | Y | 0.9 | | | Y | Y | 0.001 | | | |
| 79 | Diethyl Phthalate | Y | Y | 1 | | | Y | Y | 0.24 | | | |
| 80 | Dimethyl Phthalate | Y | Y | 1 | | | Y | Y | 0.24 | | | |
| 81 | Di-n-Butyl Phthalate | Y | Y | 1 | | | Y | Y | 0.5 | | | |
| 82 | 2,4-Dinitrotoluene | Y | Y | 1 | | | Y | Y | 0.27 | | | |
| 83 | 2,6-Dinitrotoluene | Y | Y | 1.29 | | | Y | Y | 0.29 | | | No Criteria |
| 84 | Di-n-Octyl Phthalate | Y | N | | 2 | | Y | Y | 0.38 | | | No Criteria |
| 85 | 1,2-Diphenylhydrazine | Y | Y | 1 | | | Y | N | | 0.0037 | | |
| 86 | Fluoranthene | Y | Y | 0.1 | | | Y | N | | 0.011 | | |
| 87 | Fluorene | Y | Y | 0.1 | | | Y | N | | 0.00208 | | |
| 88 | Hexachlorobenzene | Y | Y | 0.98 | | | Y | N | | 0.0000202 | | |
| 89 | Hexachlorobutadiene | Y | Y | 1 | | | Y | Y | 0.3 | | | |
| 90 | Hexachlorocyclopentadiene | Y | Y | 1 | | | Y | Y | 0.31 | | | |
| 91 | Hexachloroethane | Y | Y | 1 | | | Y | Y | 0.2 | | | |
| 92 | Indeno(1,2,3-cd) Pyrene | Y | Y | 0.1 | | | Y | N | | 0.004 | | |
| 93 | Isophorone | Y | Y | 0.95 | | | Y | Y | 0.3 | | | |
| 94 | naphthalene | Y | Y | 1 | | | Y | N | | 0.0023 | | No Criteria |
| 95 | Nitrobenzene | Y | Y | 0.71 | | | Y | Y | 0.25 | | | |
| 96 | N-Nitrosodimethylamine | Y | Y | 0.1 | | | Y | Y | 0.3 | | | |
| 97 | N-Nitrosodi-n-Propylamine | Y | Y | 0.84 | | | Y | Y | 0.001 | | | |
| 98 | N-Nitrosodiphenylamine | Y | Y | 0.94 | | | Y | Y | 0.001 | | | |
| 99 | Phenanthrene | Y | Y | 0.93 | | | Y | N | | 0.0061 | | No Criteria |
| 100 | Pyrene | Y | Y | 0.1 | | | Y | N | | 0.0051 | | |
| 101 | 1,2,4-Trichlorobenzene | Y | Y | 0.94 | | | Y | Y | 0.3 | | | No Criteria |
| 102 | Aldrin | Y | N | | 0.009 | | N | | | | | |
| 103 | alpha-BHC | Y | Y | 0.005 | | | Y | N | | 0.000496 | | |
| 104 | beta-BHC | Y | N | | 0.13 | | Y | N | | 0.000413 | | |

**SFIA - Mel Leong WQCP**
**Sanitary Treatment Plant**
**Table 2. Data Input for RPA**

| | | EFFLUENT DATA | | | | | BACKGROUND DATA (B) | | | | | |
|---|---|---|---|---|---|---|---|---|---|---|---|---|
| *CTR No.* | *Constituent name* | *Effluent Data Available (Y/N)?* | *Are all data points non-detects (Y/N)?* | *If all data points ND Enter the min detection limit (MDL) (ug/L)* | *Enter the pollutant effluent detected max conc (ug/L)* | Input Check | *B Available (Y/N)?* | *Are all B non-detects (Y/N)?* | *If all data points ND Enter the min detection limit (MDL) (ug/L)* | *Enter the Detected Maximum Background Conc* | Input Check | *7) Review other information in the SIP page 4. If information is unavailable or insufficient: 8) the RWQCB shall establish interim monitoring requirements.* |
| 105 | gamma-BHC | Y | N | | 0.036 | | Y | N | | 0.0007034 | | |
| 106 | delta-BHC | Y | N | | 0.097 | | Y | N | | 0.000042 | | No Criteria |
| 107 | Chlordane (303d listed) | Y | Y | 0.1 | | | Y | N | | 0.00018 | | |
| 108 | 4,4-DDT (303d listed) | Y | N | | 0.053 | | Y | N | | 0.000066 | | |
| 109 | 4,4-DDE | Y | N | | 0.05 | | Y | N | | 0.000693 | | |
| 110 | 4,4-DDD | Y | Y | 0.03 | | | Y | N | | 0.000313 | | |
| 111 | Dieldrin (303d listed) | Y | N | | 0.014 | | Y | N | | 0.000264 | | |
| 112 | alpha-Endosulfan | Y | Y | 0.01 | | | Y | N | | 0.000031 | | |
| 113 | beta-Endosulfan | Y | Y | 0.01 | | | Y | N | | 0.000069 | | |
| 114 | Endosulfan Sulfate | Y | Y | 0.03 | | | Y | N | | 0.0000819 | | |
| 115 | Endrin | Y | N | | 0.021 | | Y | N | | 0.000036 | | |
| 116 | Endrin Aldehyde | Y | Y | 0.01 | | | N | | | | | |
| 117 | Heptachlor | Y | N | | 0.26 | | Y | N | | 0.000019 | | |
| 118 | Heptachlor Epoxide | Y | N | | 0.022 | | Y | N | | 0.00002458 | | |
| 119-125 | PCBs sum (303d listed) | Y | Y | 0.47 | | | N | | | | | |
| 126 | Toxaphene | Y | Y | 0.5 | | | N | | | | | |
| | Ammonia [2] | Y | N | | 118,000 | | Y | N | | 210 | | |
| | Tributyltin | Y | N | | 0.019 | | N | | | | | |
| | Total PAHs | Y | Y | 0.02 | | | Y | N | | 0.26 | | |

Notes:

1) Background data used for toxics is from monitoring location BC10 (Yerba Buena Island).
2) Background data for ammonia taken from Oyster Point RMP station

**SFIA - Mel Leong WQCP**
**Sanitary Treatment Plant**
**Table 3. Reasonable Potential Analysis Results**

| Beginning | | | Step 2 | Step 3 | | | | | Step 4 | Step 2 | Step 3 | | Step 4. | Step 5. | Step 6. | Step 7 & 8. | | |
|---|---|---|---|---|---|---|---|---|---|---|---|---|---|---|---|---|---|---|
| | Constituent name | C (µg/L) Lowest (most stringent) Criteria [a] (Enter "No Criteria" for no criteria) | Effluent Data Available? | Are all data points non-detects? | Minimum MDL (ug/L) if all data ND. | Enter the pollutant effluent detected max conc (ug/L) | If all data points are ND and MinDL>C, interim monitoring is required | Maximum Pollutant Concentration (MEC) (ug/L) (MEC= deteted max value; if all ND & MDL<C then MEC = MDL) | MEC vs. C Y if MEC >= C, effluent limitation is required; 2. If MEC<C, go to Step 5 | Background Data Available? | Are all background data points non-detects? | If all background data points ND Enter the min detection limit (MDL) (ug/L) | Enter the pollutant background detected max conc (ug/L) | If all B is ND, is MDL>C? (If Y, Go To Step 7) | B vs. C If B>C, effluent limitation is required | 7) Review other information in the SIP page 4. Y if other information indicates limits are required. If information is unavailable or insufficient: 8) the RWQCB shall establish interim monitoring requirements. | RPA Result | Reason |
| A | B | C | D | E | F | G | H | I | J | L | M | N | O | P | Q | r | S | T |
| 1 | Antimony | 4300 | Y | N | | 0.41 | | 0.41 | MEC<C, go to Step 5 | Y | | | 1.8 | | B<C, Step 7 | | | |
| 2 | Arsenic | 36 | Y | N | | 5 | | 5 | MEC<C, go to Step 5 | Y | | | 2.46 | | B<C, Step 7 | | | |
| 3 | Beryllium | No Criteria | Y | Y | 0.5 | | No Criteria | 0.5 | No Criteria | Y | | | 0.215 | | No Criteria | No Criteria | | **Uo - No Criteria** |
| 4 | Cadmium | 9.356136821 | Y | | | 0.58 | | 0.58 | MEC<C, go to Step 5 | Y | | | 0.1268 | | B<C, Step 7 | | | |
| 5a | Chromium (III) | No Criteria | N | | | 0 | No Effluent Data | | | | | | | | No detected value of B, Step 7 | | | |
| 5b | Chromium (VI) | 50.35246727 | Y | N | | 6.77 | | 6.77 | MEC<C, go to Step 5 | Y | | | 4.4 | | B<C, Step 7 | | | |
| 6 | **Copper** | 4.189 | Y | N | | 13.95 | | 13.95 | Y | Y | | | 2.45 | | B<C, Step 7 | | Y | **MEC => C [13.95 ug/l vs 4.19 ug/l ]** |
| 7 | Lead | 8.517350158 | Y | N | | 5 | | 5 | MEC<C, go to Step 5 | Y | | | 0.804 | | B<C, Step 7 | | | |
| 8 | **Mercury (303d listed)** | 0.025 | Y | N | | 0.0867 | | 0.0867 | Y | Y | | | 0.0086 | | B<C, Step 7 | | Y | **MEC => C [0.09 ug/l vs 0.03 ug/l ]** |
| 9 | **Nickel (303d listed)** | 12.61538462 | Y | N | | 14.91 | | 14.91 | Y | Y | | | 3.73 | | B<C, Step 7 | | Y | **MEC => C [14.91 ug/l vs 12.62 ug/l ]** |
| 10 | Selenium | 5 | Y | N | | 1.563 | | 1.563 | MEC<C, go to Step 5 | Y | | | 0.39 | | B<C, Step 7 | | | |
| 11 | Silver | 2.235294118 | Y | N | | 0.5 | | 0.5 | MEC<C, go to Step 5 | Y | | | 0.052 | | B<C, Step 7 | | | |
| 12 | Thallium | 6.3 | Y | N | | 1.3 | | 1.3 | MEC<C, go to Step 5 | Y | | | 0.21 | | B<C, Step 7 | | | |
| 13 | Zinc | 85.62367865 | Y | N | | 71.4 | | 71.4 | MEC<C, go to Step 5 | Y | | | 5.1 | | B<C, Step 7 | | | |
| 14 | **Cyanide** | 1 | Y | N | | 15.8 | | 15.8 | Y | Y | Y | 0.4 | | N | No detected value of B, Step 7 | | Y | **MEC => C [15.8 ug/l vs 1.0 ug/l ]** |
| 15 | Asbestos | No Criteria | N | | | 0 | No Criteria | | No Criteria | | | | | | No Criteria | No Criteria | | **Uo - No Criteria** |
| 16 | 2,3,7,8-TCDD (303d listed) | 0.000000014 | Y | Y | 9.80E-07 | | MDL > C, Interim Monitor, Go To Ste | | | | | | | | No detected value of B, Step 7 | | | |
| 16-TEQ | Dioxin TEQ (303d listed) | 0.000000014 | Y | Y | 0.000000355 | | MDL > C, Interim Monitor, Go To Ste | | | Y | | | 7.10E-08 | | Y | | | |
| 17 | Acrolein | 780 | Y | Y | 5 | | MDL<=C, MDL=MEC | 5 | MEC<C, go to Step 5 | Y | Y | 0.5 | | N | No detected value of B, Step 7 | | | |
| 18 | Acrylonitrile | 0.66 | Y | Y | 5 | | MDL > C, Interim Monitor, Go To Ste | | | Y | | | 0.03 | | B<C, Step 7 | | | **Effluent MDL > C, Interim Monitor** |
| 19 | Benzene | 71 | Y | Y | 0.5 | | MDL<=C, MDL=MEC | 0.5 | MEC<C, go to Step 5 | Y | Y | 0.05 | | N | No detected value of B, Step 7 | | | |
| 20 | Bromoform | 360 | Y | N | | 0.6 | | 0.6 | MEC<C, go to Step 5 | Y | Y | 0.5 | | N | No detected value of B, Step 7 | | | |
| 21 | Carbon Tetrachloride | 4.4 | Y | Y | 0.5 | | MDL<=C, MDL=MEC | 0.5 | MEC<C, go to Step 5 | Y | | | 0.06 | | B<C, Step 7 | | | |
| 22 | Chlorobenzene | 21000 | Y | Y | 0.5 | | MDL<=C, MDL=MEC | 0.5 | MEC<C, go to Step 5 | Y | Y | 0.5 | | N | No detected value of B, Step 7 | | | |
| 23 | Chlorodibromomethane | 34 | Y | N | | 1 | | 1 | MEC<C, go to Step 5 | Y | Y | 0.05 | | N | No detected value of B, Step 7 | | | |
| 24 | Chloroethane | No Criteria | Y | N | | 0.075 | No Criteria | 0.075 | No Criteria | Y | Y | 0.5 | | N | No Criteria | No Criteria | | **Uo - No Criteria** |
| 25 | 2-Chloroethylvinyl Ether | No Criteria | Y | Y | 20 | | No Criteria | 20 | No Criteria | Y | Y | 0.5 | | N | No Criteria | No Criteria | | **Uo - No Criteria** |
| 26 | Chloroform | No Criteria | Y | N | | 11 | No Criteria | 11 | No Criteria | Y | Y | 0.5 | | N | No Criteria | No Criteria | | **Uo - No Criteria** |
| 27 | Dichlorobromomethane | 46 | Y | N | | 5 | | 5 | MEC<C, go to Step 5 | Y | Y | 0.05 | | N | No detected value of B, Step 7 | | | |
| 28 | 1,1-Dichloroethane | No Criteria | Y | Y | 0.5 | | No Criteria | 0.5 | No Criteria | Y | Y | 0.05 | | N | No Criteria | No Criteria | | **Uo - No Criteria** |
| 29 | 1,2-Dichloroethane | 99 | Y | Y | 0.5 | | MDL<=C, MDL=MEC | 0.5 | MEC<C, go to Step 5 | Y | | | 0.04 | | B<C, Step 7 | | | |
| 30 | 1,1-Dichloroethylene | 3.2 | Y | Y | 0.5 | | MDL<=C, MDL=MEC | 0.5 | MEC<C, go to Step 5 | Y | Y | 0.5 | | N | No detected value of B, Step 7 | | | |
| 31 | 1,2-Dichloropropane | 39 | Y | Y | 0.5 | | MDL<=C, MDL=MEC | 0.5 | MEC<C, go to Step 5 | Y | Y | 0.05 | | N | No detected value of B, Step 7 | | | |
| 32 | 1,3-Dichloropropylene | 1700 | Y | Y | 0.5 | | MDL<=C, MDL=MEC | 0.5 | MEC<C, go to Step 5 | | | | | | No detected value of B, Step 7 | | | |
| 33 | Ethylbenzene | 29000 | Y | Y | 0.5 | | MDL<=C, MDL=MEC | 0.5 | MEC<C, go to Step 5 | Y | Y | 0.5 | | N | No detected value of B, Step 7 | | | |
| 34 | Methyl Bromide | 4000 | Y | Y | 0.5 | | MDL<=C, MDL=MEC | 0.5 | MEC<C, go to Step 5 | Y | Y | 0.5 | | N | No detected value of B, Step 7 | | | |
| 35 | Methyl Chloride | No Criteria | Y | Y | 0.5 | | No Criteria | 0.5 | No Criteria | Y | Y | 0.5 | | N | No Criteria | No Criteria | | **Uo - No Criteria** |
| 36 | Methylene Chloride | 1600 | Y | N | | 0.485 | | 0.485 | MEC<C, go to Step 5 | Y | | | 0.5 | | B<C, Step 7 | | | |
| 37 | 1,1,2,2-Tetrachloroethane | 11 | Y | Y | 0.5 | | MDL<=C, MDL=MEC | 0.5 | MEC<C, go to Step 5 | Y | Y | 0.05 | | N | No detected value of B, Step 7 | | | |
| 38 | Tetrachloroethylene | 8.85 | Y | Y | 0.5 | | MDL<=C, MDL=MEC | 0.5 | MEC<C, go to Step 5 | Y | Y | 0.05 | | N | No detected value of B, Step 7 | | | |
| 39 | Toluene | 200000 | Y | N | | 0.46 | | 0.46 | MEC<C, go to Step 5 | Y | Y | 0.3 | | N | No detected value of B, Step 7 | | | |
| 40 | 1,2-Trans-Dichloroethylene | 140000 | Y | Y | 0.5 | | MDL<=C, MDL=MEC | 0.5 | MEC<C, go to Step 5 | Y | Y | 0.5 | | N | No detected value of B, Step 7 | | | |
| 41 | 1,1,1-Trichloroethane | No Criteria | Y | Y | 0.5 | | No Criteria | 0.5 | No Criteria | Y | Y | 0.5 | | N | No Criteria | No Criteria | | **Uo - No Criteria** |
| 42 | 1,1,2-Trichloroethane | 42 | Y | Y | 0.5 | | MDL<=C, MDL=MEC | 0.5 | MEC<C, go to Step 5 | Y | Y | 0.05 | | N | No detected value of B, Step 7 | | | |
| 43 | Trichloroethylene | 81 | Y | Y | 0.5 | | MDL<=C, MDL=MEC | 0.5 | MEC<C, go to Step 5 | Y | Y | 0.5 | | N | No detected value of B, Step 7 | | | |
| 44 | Vinyl Chloride | 525 | Y | Y | 0.5 | | MDL<=C, MDL=MEC | 0.5 | MEC<C, go to Step 5 | Y | Y | 0.5 | | N | No detected value of B, Step 7 | | | |
| 45 | Chlorophenol | 400 | Y | Y | 1.05 | | MDL<=C, MDL=MEC | 1.05 | MEC<C, go to Step 5 | Y | Y | 1.2 | | N | No detected value of B, Step 7 | | | |
| 46 | 2,4-Dichlorophenol | 790 | Y | Y | 1.2 | | MDL<=C, MDL=MEC | 1.2 | MEC<C, go to Step 5 | Y | Y | 1.3 | | N | No detected value of B, Step 7 | | | |
| 47 | 2,4-Dimethylphenol | 2300 | Y | Y | 1 | | MDL<=C, MDL=MEC | 1 | MEC<C, go to Step 5 | Y | Y | 1.3 | | N | No detected value of B, Step 7 | | | |
| 48 | 2-Methyl-4,6-Dinitrophenol | 765 | Y | Y | 1 | | MDL<=C, MDL=MEC | 1 | MEC<C, go to Step 5 | Y | Y | 1.2 | | N | No detected value of B, Step 7 | | | |
| 49 | 2,4-Dinitrophenol | 14000 | Y | Y | 3.89 | | MDL<=C, MDL=MEC | 3.89 | MEC<C, go to Step 5 | Y | Y | 0.7 | | N | No detected value of B, Step 7 | | | |
| 50 | 2-Nitrophenol | No Criteria | Y | Y | 1.86 | | No Criteria | 1.86 | No Criteria | Y | Y | 1.3 | | N | No Criteria | No Criteria | | **Uo - No Criteria** |
| 51 | 4-Nitrophenol | No Criteria | Y | Y | 1.96 | | No Criteria | 1.96 | No Criteria | Y | Y | 1.6 | | N | No Criteria | No Criteria | | **Uo - No Criteria** |
| 52 | 3-Methyl-4-Chlorophenol | No Criteria | Y | Y | 1 | | No Criteria | 1 | No Criteria | Y | Y | 1.1 | | N | No Criteria | No Criteria | | **Uo - No Criteria** |
| 53 | Pentachlorophenol | 7.9 | Y | Y | 1.04 | | MDL<=C, MDL=MEC | 1.04 | MEC<C, go to Step 5 | Y | Y | 1 | | N | No detected value of B, Step 7 | | | |
| 54 | Phenol | 4600000 | Y | Y | 1 | | MDL<=C, MDL=MEC | 1 | MEC<C, go to Step 5 | Y | Y | 1.3 | | N | No detected value of B, Step 7 | | | |
| 55 | 2,4,6-Trichlorophenol | 6.5 | Y | Y | 1.88 | | All ND MDL<=C, MDL=MEC | 1.88 | MEC<C, go to Step 5 | Y | Y | 1.3 | | N | No detected value of B, Step 7 | | | |
| 56 | Acenaphthene | 2700 | Y | Y | 0.52 | | All ND MDL<=C, MDL=MEC | 0.52 | MEC<C, go to Step 5 | Y | | | 0.0015 | | B<C, Step 7 | | | |
| 57 | Acenephthylene | No Criteria | Y | Y | 0.39 | | No Criteria | 0.39 | No Criteria | Y | | | 0.00053 | | No Criteria | No Criteria | | **Uo - No Criteria** |
| 58 | Anthracene | 110000 | Y | Y | 0.02 | | All ND MDL<=C, MDL=MEC | 0.02 | MEC<C, go to Step 5 | Y | | | 0.0005 | | B<C, Step 7 | | | |
| 59 | Benzidine | 0.00054 | Y | Y | 2.5 | | MDL > C, Go to Step 5 | | | Y | Y | 0.0015 | | Y | No detected value of B, Step 7 | | | |
| 60 | Benzo(a)Anthracene | 0.049 | Y | Y | 0.05 | | MDL > C, Go to Step 5 | | | Y | | | 0.0053 | | B<C, Step 7 | | | |
| 61 | Benzo(a)Pyrene | 0.049 | Y | Y | 0.05 | | MDL > C, Go to Step 5 | | | Y | | | 0.00029 | | B<C, Step 7 | | | |
| 62 | Benzo(b)Fluoranthene | 0.049 | Y | Y | 0.1 | | MDL > C, Go to Step 5 | | | Y | | | 0.0046 | | B<C, Step 7 | | | |
| 63 | Benzo(ghi)Perylene | No Criteria | Y | Y | 0.09 | | No Criteria | 0.09 | No Criteria | Y | | | 0.0027 | | No Criteria | No Criteria | | **Uo - No Criteria** |
| 64 | Benzo(k)Fluoranthene | 0.049 | Y | Y | 0.05 | | MDL > C, Go to Step 5 | | | Y | | | 0.0015 | | B<C, Step 7 | | | |
| 65 | Bis(2-Chloroethoxy)Methane | No Criteria | Y | Y | 0.97 | | No Criteria | 0.97 | No Criteria | Y | Y | 0.3 | | N | No Criteria | No Criteria | | **Uo - No Criteria** |
| 66 | Bis(2-Chloroethyl)Ether | 1.4 | Y | Y | 0.97 | | All ND MDL<=C, MDL=MEC | 0.97 | MEC<C, go to Step 5 | Y | Y | 0.3 | | N | No detected value of B, Step 7 | | | |
| 67 | Bis(2-Chloroisopropyl)Ether | 170000 | Y | Y | 0.81 | | All ND MDL<=C, MDL=MEC | 0.81 | MEC<C, go to Step 5 | | | | | | No detected value of B, Step 7 | | | |
| 68 | Bis(2-Ethylhexyl)Phthalate | 5.9 | Y | Y | 0.69 | | All ND MDL<=C, MDL=MEC | 0.69 | MEC<C, go to Step 5 | Y | Y | 0.5 | | N | No detected value of B, Step 7 | | | |
| 69 | 4-Bromophenyl Phenyl Ether | No Criteria | Y | Y | 1 | | No Criteria | 1 | No Criteria | Y | Y | 0.23 | | N | No Criteria | No Criteria | | **Uo - No Criteria** |
| 70 | Butylbenzyl Phthalate | 5200 | Y | Y | 0.26 | | All ND MDL<=C, MDL=MEC | 0.26 | MEC<C, go to Step 5 | Y | Y | 0.52 | | N | No detected value of B, Step 7 | | | |
| 71 | 2-Chloronaphthalene | 4300 | Y | Y | 1 | | All ND MDL<=C, MDL=MEC | 1 | MEC<C, go to Step 5 | Y | Y | 0.3 | | N | No detected value of B, Step 7 | | | |
| 72 | 4-Chlorophenyl Phenyl Ether | No Criteria | Y | Y | 0.89 | | No Criteria | 0.89 | No Criteria | Y | Y | 0.3 | | N | No Criteria | No Criteria | | **Uo - No Criteria** |

**SFIA - Mel Leong WQCP**
**Sanitary Treatment Plant**
**Table 3. Reasonable Potential Analysis Results**

| Beginning | | | Step 2 | Step 3 | | | | | Step 4 | Step 2 | Step 3 | | Step 4. | Step 5. | Step 6. | Step 7 & 8. | | |
|---|---|---|---|---|---|---|---|---|---|---|---|---|---|---|---|---|---|---|
| | Constituent name | C (µg/L) / Lowest (most stringent) Criteria [a] (Enter "No Criteria" for no criteria) | Effluent Data Available? | Are all data points non-detects? | Minimum MDL (ug/L) if all data ND. | Enter the pollutant effluent detected max conc (ug/L) | If all data points are ND and MinDL>C, interim monitoring is required | Maximum Pollutant Concentration (MEC) (ug/L) / (MEC= deteted max value; if all ND & MDL<C then MEC = MDL) | MEC vs. C / Y if If MEC >= C, effluent limitation is required; 2. If MEC<C, go to Step 5 | Background Data Available? | Are all background data points non-detects? | If all background data points ND Enter the min detection limit (MDL) (ug/L) | Enter the pollutant background detected max conc (ug/L) | If all B is ND, is MDL>C? (If Y, Go To Step 7) | B vs. C / If B>C, effluent limitation is required | 7) Review other information in the SIP page 4. Y if other information indicates limits are required. If information is unavailable or insufficient: 8) the RWQCB shall establish interim monitoring requirements. | RPA Result | Reason |
| 73 | Chrysene | 0.049 | Y | Y | 0.9 | | MDL > C, Go to Step 5 | | | Y | | | 0.0024 | | B<C, Step 7 | | | |
| 74 | Dibenzo(a,h)Anthracene | 0.049 | Y | Y | 0.09 | | MDL > C, Go to Step 5 | | | Y | | | 0.00064 | | B<C, Step 7 | | | |
| 75 | 1,2-Dichlorobenzene | 17000 | Y | Y | 0.5 | | All ND MDL<=C, MDL=MEC | 0.5 | MEC<C, go to Step 5 | Y | Y | 0.8 | | N | No detected value of B, Step 7 | | | |
| 76 | 1,3-Dichlorobenzene | 2600 | Y | Y | 0.5 | | All ND MDL<=C, MDL=MEC | 0.5 | MEC<C, go to Step 5 | Y | Y | 0.8 | | N | No detected value of B, Step 7 | | | |
| 77 | 1,4-Dichlorobenzene | 2600 | Y | N | | 0.13 | | 0.13 | MEC<C, go to Step 5 | Y | Y | 0.8 | | N | No detected value of B, Step 7 | | | |
| 78 | 3,3'-Dichlorobenzidine | 0.077 | Y | Y | 0.9 | | MDL > C, Go to Step 5 | | | Y | Y | 0.001 | | N | No detected value of B, Step 7 | | | |
| 79 | Diethyl Phthalate | 120000 | Y | Y | 1 | | All ND MDL<=C, MDL=MEC | 1 | MEC<C, go to Step 5 | Y | Y | 0.24 | | N | No detected value of B, Step 7 | | | |
| 80 | Dimethyl Phthalate | 2900000 | Y | Y | 1 | | All ND MDL<=C, MDL=MEC | 1 | MEC<C, go to Step 5 | Y | Y | 0.24 | | N | No detected value of B, Step 7 | | | |
| 81 | Di-n-Butyl Phthalate | 12000 | Y | Y | 1 | | All ND MDL<=C, MDL=MEC | 1 | MEC<C, go to Step 5 | Y | Y | 0.5 | | N | No detected value of B, Step 7 | | | |
| 82 | 2,4-Dinitrotoluene | 9.1 | Y | Y | 1 | | All ND MDL<=C, MDL=MEC | 1 | MEC<C, go to Step 5 | Y | Y | 0.27 | | N | No detected value of B, Step 7 | | | |
| 83 | 2,6-Dinitrotoluene | No Criteria | Y | Y | 1.29 | | No Criteria | 1.29 | No Criteria | Y | Y | 0.29 | | N | No Criteria | No Criteria | | **Uo - No Criteria** |
| 84 | Di-n-Octyl Phthalate | No Criteria | Y | N | | 2 | No Criteria | 2 | No Criteria | Y | Y | 0.38 | | N | No Criteria | No Criteria | | **Uo - No Criteria** |
| 85 | 1,2-Diphenylhydrazine | 0.54 | Y | Y | 1 | | MDL > C, Interim Monitor, Go To Ste | | | Y | | | 0.0037 | | B<C, Step 7 | | | **Effluent MDL > C, Interim Monitor** |
| 86 | Fluoranthene | 370 | Y | Y | 0.1 | | All ND MDL<=C, MDL=MEC | 0.1 | MEC<C, go to Step 5 | Y | | | 0.011 | | B<C, Step 7 | | | |
| 87 | Fluorene | 14000 | Y | Y | 0.1 | | All ND MDL<=C, MDL=MEC | 0.1 | MEC<C, go to Step 5 | Y | | | 0.00208 | | B<C, Step 7 | | | |
| 88 | Hexachlorobenzene | 0.00077 | Y | Y | 0.98 | | MDL > C, Go to Step 5 | | | Y | | | 0.0000202 | | B<C, Step 7 | | | |
| 89 | Hexachlorobutadiene | 50 | Y | Y | 1 | | All ND MDL<=C, MDL=MEC | 1 | MEC<C, go to Step 5 | Y | Y | 0.3 | | N | No detected value of B, Step 7 | | | |
| 90 | Hexachlorocyclopentadiene | 17000 | Y | Y | 1 | | All ND MDL<=C, MDL=MEC | 1 | MEC<C, go to Step 5 | Y | Y | 0.31 | | N | No detected value of B, Step 7 | | | |
| 91 | Hexachloroethane | 8.9 | Y | Y | 1 | | All ND MDL<=C, MDL=MEC | 1 | MEC<C, go to Step 5 | Y | Y | 0.2 | | N | No detected value of B, Step 7 | | | |
| 92 | Indeno(1,2,3-cd) Pyrene | 0.049 | Y | Y | 0.1 | | MDL > C, Go to Step 5 | | | Y | | | 0.004 | | B<C, Step 7 | | | |
| 93 | Isophorone | 600 | Y | Y | 0.95 | | All ND MDL<=C, MDL=MEC | 0.95 | MEC<C, go to Step 5 | Y | Y | 0.3 | | N | No detected value of B, Step 7 | | | |
| 94 | naphthalene | No Criteria | Y | Y | 1 | | No Criteria | 1 | No Criteria | Y | | | 0.0023 | | No Criteria | No Criteria | | **Uo - No Criteria** |
| 95 | Nitrobenzene | 1900 | Y | Y | 0.71 | | All ND MDL<=C, MDL=MEC | 0.71 | MEC<C, go to Step 5 | Y | Y | 0.25 | | N | No detected value of B, Step 7 | | | |
| 96 | N-Nitrosodimethylamine | 8.1 | Y | Y | 0.1 | | All ND MDL<=C, MDL=MEC | 0.1 | MEC<C, go to Step 5 | Y | Y | 0.3 | | N | No detected value of B, Step 7 | | | |
| 97 | N-Nitrosodi-n-Propylamine | 1.4 | Y | Y | 0.84 | | All ND MDL<=C, MDL=MEC | 0.84 | MEC<C, go to Step 5 | Y | Y | 0.001 | | N | No detected value of B, Step 7 | | | |
| 98 | N-Nitrosodiphenylamine | 16 | Y | Y | 0.94 | | All ND MDL<=C, MDL=MEC | 0.94 | MEC<C, go to Step 5 | Y | Y | 0.001 | | N | No detected value of B, Step 7 | | | |
| 99 | Phenanthrene | No Criteria | Y | Y | 0.93 | | No Criteria | 0.93 | No Criteria | Y | | | 0.0061 | | No Criteria | No Criteria | | **Uo - No Criteria** |
| 100 | Pyrene | 11000 | Y | Y | 0.1 | | All ND MDL<=C, MDL=MEC | 0.1 | MEC<C, go to Step 5 | Y | | | 0.0051 | | B<C, Step 7 | | | |
| 101 | 1,2,4-Trichlorobenzene | No Criteria | Y | Y | 0.94 | | No Criteria | 0.94 | No Criteria | Y | Y | 0.3 | | N | No Criteria | No Criteria | | **Uo - No Criteria** |
| 102 | **Aldrin** | 0.00014 | Y | N | | 0.009 | | 0.009 | Y | | | | | | No detected value of B, Step 7 | | Y | **MEC => C [0.009 ug/l vs 0.00014 ug/l ]** |
| 103 | alpha-BHC | 0.013 | Y | Y | 0.005 | | All ND MDL<=C, MDL=MEC | 0.005 | MEC<C, go to Step 5 | Y | | | 0.000496 | | B<C, Step 7 | | | |
| 104 | **beta-BHC** | 0.046 | Y | N | | 0.13 | | 0.13 | Y | Y | | | 0.000413 | | B<C, Step 7 | | Y | **MEC => C [0.13 ug/l vs 0.046 ug/l ]** |
| 105 | gamma-BHC | 0.063 | Y | N | | 0.036 | | 0.036 | MEC<C, go to Step 5 | Y | | | 0.0007034 | | B<C, Step 7 | | | |
| 106 | delta-BHC | No Criteria | Y | N | | 0.097 | No Criteria | 0.097 | No Criteria | Y | | | 0.000042 | | No Criteria | No Criteria | | **Uo - No Criteria** |
| 107 | Chlordane (303d listed) | 0.00059 | Y | Y | 0.1 | | MDL > C, Go to Step 5 | | | Y | | | 0.00018 | | B<C, Step 7 | | | |
| 108 | **4,4-DDT (303d listed)** | 0.00059 | Y | N | | 0.053 | MDL > C, Go to Step 5 | 0.053 | Y | Y | | | 0.000066 | | B<C, Step 7 | | Y | **MEC => C [0.053 ug/l vs 0.00059 ug/l ]** |
| 109 | **4,4-DDE** | 0.00059 | Y | N | | 0.05 | MDL > C, Go to Step 5 | 0.05 | Y | Y | | | 0.000693 | | | | Y | **MEC => C [0.050 ug/l vs 0.00059 ug/l ]** |
| 110 | 4,4-DDD | 0.00084 | Y | Y | 0.03 | | MDL > C, Go to Step 5 | | | Y | | | 0.000313 | | B<C, Step 7 | | | |
| 111 | **Dieldrin (303d listed)** | 0.00014 | Y | N | | 0.014 | MDL > C, Go to Step 5 | 0.014 | Y | Y | | | 0.000264 | | | | Y | **MEC => C [0.014 ug/l vs 0.00014 ug/l ]** |
| 112 | alpha-Endosulfan | 0.0087 | Y | Y | 0.01 | | MDL > C, Interim Monitor, Go To Ste | | | Y | | | 0.000031 | | B<C, Step 7 | | | **Effluent MDL > C, Interim Monitor** |
| 113 | beta-Endosulfan | 0.0087 | Y | Y | 0.01 | | MDL > C, Interim Monitor, Go To Ste | | | Y | | | 0.000069 | | B<C, Step 7 | | | **Effluent MDL > C, Interim Monitor** |
| 114 | Endosulfan Sulfate | 240 | Y | Y | 0.03 | | All ND MDL<=C, MDL=MEC | 0.03 | MEC<C, go to Step 5 | Y | | | 0.0000819 | | B<C, Step 7 | | | |
| 115 | **Endrin** | 0.0023 | Y | N | | 0.021 | | 0.021 | Y | Y | | | 0.000036 | | B<C, Step 7 | | Y | **MEC => C [0.0210 ug/l vs 0.0023 ug/l ]** |
| 116 | Endrin Aldehyde | 0.81 | Y | Y | 0.01 | | All ND MDL<=C, MDL=MEC | 0.01 | MEC<C, go to Step 5 | | | | | | No detected value of B, Step 7 | | | |
| 117 | **Heptachlor** | 0.00021 | Y | N | | 0.26 | MDL > C, Go to Step 5 | 0.26 | Y | Y | | | 0.000019 | | B<C, Step 7 | | Y | **MEC => C [0.260 ug/l vs 0.00021 ug/l ]** |
| 118 | **Heptachlor Epoxide** | 0.00011 | Y | N | | 0.022 | MDL > C, Go to Step 5 | 0.022 | Y | Y | | | 0.00002458 | | B<C, Step 7 | | Y | **MEC => C [0.022 ug/l vs 0.00011 ug/l ]** |
| 119-125 | PCBs sum (303d listed) | 0.00017 | Y | Y | 0.47 | | MDL > C, Go to Step 5 | | | | | | | | No detected value of B, Step 7 | | | |
| 126 | Toxaphene | 0.0002 | Y | Y | 0.5 | | MDL > C, Go to Step 5 | | | | | | | | No detected value of B, Step 7 | | | |
| | **Ammonia** | 1,500 | Y | N | | 118,000 | MDL > C, Go to Step 5 | 118,000 | Y | Y | | | 210 | | B<C, Step 7 | | Y | **MEC => C (120 mg/l vs 1.5 mg/l)** |
| | **Tributyltin** | 0.01 | Y | N | | 0.019 | | 0.019 | Y | | | | | | No detected value of B, Step 7 | | Y | **MEC => C [0.019 ug/l vs 0.010 ug/l ]** |
| | Total PAHs | 15 | Y | Y | 0.02 | | All ND MDL<=C, MDL=MEC | 0.02 | MEC<C, go to Step 5 | Y | | | 0.26 | | B<C, Step 7 | | | |

a. The most stringent of salt and fresh water criteria were selected for this analysis.

b. Acronyms in the "Final Result" column: Ud: Cannot determine reasonable potential due to the absence of data, or because Minimum DL is greater than water quality objective or CTR criteria

Uo: No criteria available

IM: Interim monitoring is required

**SFIA - Mel Leong WQCP**
**Sanitary Treatment Plant**
**Table 3. Reasonable Potential Analysis Results**

| Beginning | |
|---|---|
| | *Constituent name* |
| **A** | **B** |
| 1 | Antimony |
| 2 | Arsenic |
| 3 | Beryllium |
| 4 | Cadmium |
| 5a | Chromium (III) |
| 5b | Chromium (VI) |
| 6 | **Copper** |
| 7 | Lead |
| 8 | **Mercury (303d listed)** |
| 9 | **Nickel (303d listed)** |
| 10 | Selenium |
| 11 | Silver |
| 12 | Thallium |
| 13 | Zinc |
| 14 | **Cyanide** |
| 15 | Asbestos |
| 16 | 2,3,7,8-TCDD (303d listed) |
| 16-TEQ | Dioxin TEQ (303d listed) |
| 17 | Acrolein |
| 18 | Acrylonitrile |
| 19 | Benzene |
| 20 | Bromoform |
| 21 | Carbon Tetrachloride |
| 22 | Chlorobenzene |
| 23 | Chlorodibromomethane |
| 24 | Chloroethane |
| 25 | 2-Chloroethylvinyl Ether |
| 26 | Chloroform |
| 27 | Dichlorobromomethane |
| 28 | 1,1-Dichloroethane |
| 29 | 1,2-Dichloroethane |
| 30 | 1,1-Dichloroethylene |
| 31 | 1,2-Dichloropropane |
| 32 | 1,3-Dichloropropylene |
| 33 | Ethylbenzene |
| 34 | Methyl Bromide |
| 35 | Methyl Chloride |
| 36 | Methylene Chloride |
| 37 | 1,1,2,2-Tetrachloroethane |
| 38 | Tetrachloroethylene |
| 39 | Toluene |
| 40 | 1,2-Trans-Dichloroethylene |
| 41 | 1,1,1-Trichloroethane |
| 42 | 1,1,2-Trichloroethane |
| 43 | Trichloroethylene |
| 44 | Vinyl Chloride |
| 45 | Chlorophenol |
| 46 | 2,4-Dichlorophenol |
| 47 | 2,4-Dimethylphenol |
| 48 | 2-Methyl-4,6-Dinitrophenol |
| 49 | 2,4-Dinitrophenol |
| 50 | 2-Nitrophenol |
| 51 | 4-Nitrophenol |
| 52 | 3-Methyl-4-Chlorophenol |
| 53 | Pentachlorophenol |
| 54 | Phenol |
| 55 | 2,4,6-Trichlorophenol |
| 56 | Acenaphthene |
| 57 | Acenephthylene |
| 58 | Anthracene |
| 59 | Benzidine |
| 60 | Benzo(a)Anthracene |
| 61 | Benzo(a)Pyrene |
| 62 | Benzo(b)Fluoranthene |
| 63 | Benzo(ghi)Perylene |
| 64 | Benzo(k)Fluoranthene |
| 65 | Bis(2-Chloroethoxy)Methane |
| 66 | Bis(2-Chloroethyl)Ether |
| 67 | Bis(2-Chloroisopropyl)Ether |
| 68 | Bis(2-Ethylhexyl)Phthalate |
| 69 | 4-Bromophenyl Phenyl Ether |
| 70 | Butylbenzyl Phthalate |
| 71 | 2-Chloronaphthalene |
| 72 | 4-Chlorophenyl Phenyl Ether |

| **Beginning** | | |
|---|---|---|
| | *Constituent name* | |
| 73 | Chrysene | |
| 74 | Dibenzo(a,h)Anthracene | |
| 75 | 1,2-Dichlorobenzene | |
| 76 | 1,3-Dichlorobenzene | |
| 77 | 1,4-Dichlorobenzene | |
| 78 | 3,3'-Dichlorobenzidine | |
| 79 | Diethyl Phthalate | |
| 80 | Dimethyl Phthalate | |
| 81 | Di-n-Butyl Phthalate | |
| 82 | 2,4-Dinitrotoluene | |
| 83 | 2,6-Dinitrotoluene | |
| 84 | Di-n-Octyl Phthalate | |
| 85 | 1,2-Diphenylhydrazine | |
| 86 | Fluoranthene | |
| 87 | Fluorene | |
| 88 | Hexachlorobenzene | |
| 89 | Hexachlorobutadiene | |
| 90 | Hexachlorocyclopentadiene | |
| 91 | Hexachloroethane | |
| 92 | Indeno(1,2,3-cd) Pyrene | |
| 93 | Isophorone | |
| 94 | naphthalene | |
| 95 | Nitrobenzene | |
| 96 | N-Nitrosodimethylamine | |
| 97 | N-Nitrosodi-n-Propylamine | |
| 98 | N-Nitrosodiphenylamine | |
| 99 | Phenanthrene | |
| 100 | Pyrene | |
| 101 | 1,2,4-Trichlorobenzene | |
| 102 | **Aldrin** | |
| 103 | alpha-BHC | |
| 104 | **beta-BHC** | |
| 105 | gamma-BHC | |
| 106 | delta-BHC | |
| 107 | Chlordane (303d listed) | |
| 108 | **4,4-DDT (303d listed)** | |
| 109 | **4,4-DDE** | |
| 110 | 4,4-DDD | |
| 111 | **Dieldrin (303d listed)** | |
| 112 | alpha-Endosulfan | |
| 113 | beta-Endosulfan | |
| 114 | Endosulfan Sulfate | |
| 115 | **Endrin** | |
| 116 | Endrin Aldehyde | |
| 117 | **Heptachlor** | |
| 118 | **Heptachlor Epoxide** | |
| 119-125 | PCBs sum (303d listed) | |
| 126 | Toxaphene | |
| | **Ammonia** | |
| | **Tributyltin** | |
| | Total PAHs | |
| | a. The most stringent of salt and fr | |
| | b. Acronyms in the "Final Result" c | |
| | | |
| | | |

**SFIA Mel Leong WQCP**
**Sanitary Treatment Plant**
**Table 6. Salinity Hardness**

| Sort | Test Material | Matrix | Site Code | Cruise # | Sample Date | Hardness Qual | Hardness Result | Hardness MDL | Hardness Unit | Salinity (by Solomat) Qual | Salinity (by Solomat) Result | Salinity (by Solomat) MDL | Salinity (by Solomat) Unit | Salinity (by salinometer) Qual | Salinity (by salinometer) Result | Salinity (by salinometer) MDL | Salinity (by salinometer) Unit | Salinity (by SCT) Qual | Salinity (by SCT) Result | Salinity (by SCT) MDL | Salinity (by SCT) Unit | pH Qual | pH Result | pH MDL | pH Unit |
|---|---|---|---|---|---|---|---|---|---|---|---|---|---|---|---|---|---|---|---|---|---|---|---|---|---|
| 187 | ES_WATER | WCD | BB15 | 1994-01 | 01/31/1994 | | | | | | | | | | | | | | | | | | | | |
| 188 | ES_WATER | WCD | BB15 | 1994-04 | 04/18/1994 | | | | | | | | | | | | | | | | | | | | |
| 189 | ES_WATER | WCD | BB15 | 1994-08 | 08/15/1994 | | | | | | | | | | | | | | | | | | | | |
| 190 | ES_WATER | WCD | BB15 | 1995-02 | 02/06/1995 | | | | | | | | | | 15.1 | 1.0 | o/oo | | | | | | | | |
| 191 | ES_WATER | WCD | BB15 | 1995-04 | 04/25/1995 | | | | | | | | | | 16.2 | 2.0 | o/oo | | | | | | | | |
| 192 | ES_WATER | WCD | BB15 | 1995-08 | 08/15/1995 | | | | | | | | | | 23.8 | 2.0 | o/oo | | | | | | | | |
| 193 | ES_WATER | WCD | BB15 | 1996-02 | 02/05/1996 | | | | | | | | | | 22.3 | 2.0 | o/oo | | | | | | | | |
| 194 | ES_WATER | WCD | BB15 | 1996-04 | 04/30/1996 | | | | | | | | | | 21.1 | 2.0 | o/oo | | | | | | | | |
| 195 | ES_WATER | WCD | BB15 | 1996-07 | 07/29/1996 | | | | | | | | | | 27.1 | 2.0 | o/oo | | | | | | | | |
| 196 | ES_WATER | WCD | BB15 | 1997-01 | 01/21/1997 | | | | | | 12.9 | 2.0 | o/oo | | | | | | | | | | | | |
| 197 | ES_WATER | WCD | BB15 | 1997-04 | 04/16/1997 | | | | | | 24.1 | 2.0 | o/oo | | | | | | | | | | | | |
| 198 | ES_WATER | WCD | BB15 | 1997-07 | 07/28/1997 | | | | | | | | | | 30.0 | 2.0 | o/oo | | | | | | | | |
| 199 | ES_WATER | WCD | BB15 | 1998-02 | 01/27/1998 | | | | | | | | | | 19.2 | 2.0 | o/oo | | | | | | | | |
| 200 | ES_WATER | WCD | BB15 | 1998-04 | 04/20/1998 | | | | | | | | | | 17.7 | | o/oo | | | | | | | | |
| 201 | ES_WATER | WCD | BB15 | 1998-07 | 07/20/1998 | | | | | | | | | | 22.1 | 2.0 | o/oo | | | | | | | | |
| 202 | ES_WATER | WCD | BB15 | 1999-02 | 02/01/1999 | | | | | | | | | | 24.0 | 2.0 | psu | | | | | | | | |
| 203 | ES_WATER | WCD | BB15 | 1999-04 | 04/12/1999 | | | | | | | | | | 21.0 | 2.0 | psu | | | | | | | | |
| 204 | ES_WATER | WCD | BB15 | 1999-07 | 07/13/1999 | | | | | | | | | | 27.9 | 2.0 | psu | | | | | | | | |
| 205 | ES_WATER | WCD | BB15 | 2000-02 | 02/01/2000 | | | | | | | | | | 26.8 | 2.0 | psu | | | | | | | | |
| 206 | ES_WATER | WCD | BB15 | 2000-07 | 07/11/2000 | | | | | | | | | | 28.1 | 2.0 | psu | | | | | | | | |
| 207 | ES_WATER | WCD | BB15 | 2001-02 | 02/06/2001 | | | | | | | | | | 28.6 | 2.0 | psu | | | | | | | | |
| 208 | ES_WATER | WCD | BB15 | 2001-08 | 07/31/2001 | | | | | | | | | | 30.4 | 2.0 | psu | | | | | | | | |
| 386 | ES_WATER | WCT | BB15 | 1994-01 | 01/31/1994 | | | | | | | | | | | | | | 28.2 | 0.0 | o/oo | | 7.7 | 0.1 | pH |
| 387 | ES_WATER | WCT | BB15 | 1994-04 | 04/18/1994 | | | | | | | | | | | | | | 26.7 | 0.0 | o/oo | | 8.1 | 0.1 | pH |
| 388 | ES_WATER | WCT | BB15 | 1994-08 | 08/15/1994 | | | | | | | | | | | | | | 31.0 | 1.0 | o/oo | | 8.0 | 0.1 | pH |
| 389 | ES_WATER | WCT | BB15 | 1995-02 | 02/06/1995 | | | | | | | | | | | | | | 16.0 | | o/oo | | 7.6 | 0.1 | pH |
| 390 | ES_WATER | WCT | BB15 | 1995-04 | 04/25/1995 | | | | | | | | | | | | | | 16.8 | | o/oo | | 8.1 | 0.1 | pH |
| 391 | ES_WATER | WCT | BB15 | 1995-08 | 08/15/1995 | | | | | | | | | | | | | | 24.2 | | o/oo | | 7.8 | 0.1 | pH |
| 392 | ES_WATER | WCT | BB15 | 1996-02 | 02/05/1996 | | | | | | | | | | | | | | 18.0 | 1.0 | o/oo | | 7.9 | 0.0 | pH |
| 393 | ES_WATER | WCT | BB15 | 1996-04 | 04/30/1996 | | | | | | | | | | | | | | 18.0 | | o/oo | | 8.0 | 0.0 | pH |
| 394 | ES_WATER | WCT | BB15 | 1996-07 | 07/29/1996 | | | | | | | | | | | | | | 21.0 | | o/oo | | 8.0 | 0.0 | pH |
| 395 | ES_WATER | WCT | BB15 | 1997-01 | 01/21/1997 | | | | | | | | | | | | | | 12.2 | | o/oo | | 7.8 | 0.0 | pH |
| 396 | ES_WATER | WCT | BB15 | 1997-04 | 04/16/1997 | | | | | | | | | | | | | | | | | | 8.0 | 0.0 | pH |
| 397 | ES_WATER | WCT | BB15 | 1997-07 | 07/28/1997 | | | | | | | | | | | | | | 28.9 | | o/oo | | 7.8 | 0.0 | pH |
| 398 | ES_WATER | WCT | BB15 | 1998-02 | 01/27/1998 | | | | | | | | | | | | | | 19.0 | | o/oo | | 7.8 | 0.0 | pH |
| 399 | ES_WATER | WCT | BB15 | 1998-04 | 04/20/1998 | | | | | | | | | | | | | | 16.8 | | o/oo | | 8.3 | 0.0 | pH |
| 400 | ES_WATER | WCT | BB15 | 1998-07 | 07/20/1998 | | | | | | | | | | | | | | 22.6 | | o/oo | | 8.0 | 0.0 | pH |
| 401 | ES_WATER | WCT | BB15 | 1999-02 | 02/01/1999 | | | | | | | | | | | | | | 28.8 | | o/oo | | 7.8 | | pH |
| 402 | ES_WATER | WCT | BB15 | 1999-04 | 04/12/1999 | | | | | | | | | | | | | | 20.9 | | o/oo | | 8.4 | | pH |
| 403 | ES_WATER | WCT | BB15 | 1999-07 | 07/13/1999 | | | | | | | | | | | | | | 28.0 | | o/oo | | 8.0 | | pH |
| 404 | ES_WATER | WCT | BB15 | 2000-02 | 02/01/2000 | | | | | | | | | | | | | | 26.0 | 0.1 | o/oo | | 7.8 | 0.0 | pH |
| 405 | ES_WATER | WCT | BB15 | 2000-07 | 07/11/2000 | | | | | | | | | | | | | | 28.3 | 0.1 | o/oo | | 7.9 | 0.0 | pH |
| 406 | ES_WATER | WCT | BB15 | 2001-02 | 02/06/2001 | | | | | | | | | | | | | | 28.3 | 0.2 | o/oo | | 8.0 | 0.0 | pH |
| 407 | ES_WATER | WCT | BB15 | 2001-08 | 07/31/2001 | | | | | | | | | | | | | | 30.0 | 0.2 | o/oo | | 7.9 | 0.0 | pH |
| 27 | ES_WATER | WCD | BA40 | 1993-03 | 03/02/1993 | | | | | | | | | | 18.0 | 0.0 | o/oo | | | | | | | | |
| 28 | ES_WATER | WCD | BA40 | 1993-05 | 05/24/1993 | | | | | | | | | | 24.2 | 0.0 | o/oo | | | | | | | | |
| 29 | ES_WATER | WCD | BA40 | 1993-09 | 09/13/1993 | | | | | | | | | | 28.9 | 0.0 | o/oo | | | | | | | | |
| 30 | ES_WATER | WCD | BA40 | 1994-01 | 02/02/1994 | | | | | | | | | | | | | | | | | | | | |
| 31 | ES_WATER | WCD | BA40 | 1994-04 | 04/18/1994 | | | | | | | | | | | | | | | | | | | | |
| 32 | ES_WATER | WCD | BA40 | 1994-08 | 08/16/1994 | | | | | | | | | | | | | | | | | | | | |
| 33 | ES_WATER | WCD | BA40 | 1995-02 | 02/07/1995 | | | | | | | | | | 16.2 | 1.0 | o/oo | | | | | | | | |
| 34 | ES_WATER | WCD | BA40 | 1995-04 | 04/24/1995 | | | | | | | | | | 15.8 | 2.0 | o/oo | | | | | | | | |
| 35 | ES_WATER | WCD | BA40 | 1995-08 | 08/15/1995 | | | | | | | | | | 23.8 | 2.0 | o/oo | | | | | | | | |
| 36 | ES_WATER | WCD | BA40 | 1996-02 | 02/06/1996 | | | | | | | | | | 20.6 | 2.0 | o/oo | | | | | | | | |
| 37 | ES_WATER | WCD | BA40 | 1996-04 | 05/02/1996 | | | | | | | | | | 19.8 | 2.0 | o/oo | | | | | | | | |
| 38 | ES_WATER | WCD | BA40 | 1996-07 | 07/29/1996 | | | | | | | | | | 26.8 | 2.0 | o/oo | | | | | | | | |
| 39 | ES_WATER | WCD | BA40 | 1997-01 | 01/22/1997 | | | | | | 12.1 | 2.0 | o/oo | | | | | | | | | | | | |
| 40 | ES_WATER | WCD | BA40 | 1997-04 | 04/16/1997 | | | | | | 22.2 | 2.0 | o/oo | | | | | | | | | | | | |
| 41 | ES_WATER | WCD | BA40 | 1997-07 | 07/29/1997 | | | | | | | | | | 29.7 | 2.0 | o/oo | | | | | | | | |
| 42 | ES_WATER | WCD | BA40 | 1998-02 | 01/27/1998 | | | | | | | | | | 19.2 | 2.0 | o/oo | | | | | | | | |
| 43 | ES_WATER | WCD | BA40 | 1998-04 | 04/22/1998 | | | | | | | | | | 16.9 | | o/oo | | | | | | | | |
| 44 | ES_WATER | WCD | BA40 | 1998-07 | 07/20/1998 | | | | | | | | | | 20.5 | 2.0 | o/oo | | | | | | | | |
| 45 | ES_WATER | WCD | BA40 | 1999-02 | 02/01/1999 | | | | | | | | | | 23.2 | 2.0 | psu | | | | | | | | |
| 46 | ES_WATER | WCD | BA40 | 1999-04 | 04/12/1999 | | | | | | | | | | 19.4 | 2.0 | psu | | | | | | | | |
| 47 | ES_WATER | WCD | BA40 | 1999-07 | 07/13/1999 | | | | | | | | | | 27.6 | 2.0 | psu | | | | | | | | |
| 48 | ES_WATER | WCD | BA40 | 2000-02 | 02/01/2000 | | | | | | | | | | 26.6 | 2.0 | psu | | | | | | | | |
| 49 | ES_WATER | WCD | BA40 | 2000-07 | 07/11/2000 | | | | | | | | | | 27.3 | 2.0 | psu | | | | | | | | |
| 50 | ES_WATER | WCD | BA40 | 2001-02 | 02/06/2001 | | | | | | | | | | 28.5 | 2.0 | psu | | | | | | | | |
| 51 | ES_WATER | WCD | BA40 | 2001-08 | 07/31/2001 | | | | | | | | | | 30.1 | 2.0 | psu | | | | | | | | |
| 98 | ES_WATER | WCT | BA40 | 1993-03 | 03/02/1993 | | | | | | | | | | | | | | 17.0 | | o/oo | | 8.2 | 0.1 | pH |
| 99 | ES_WATER | WCT | BA40 | 1993-05 | 05/24/1993 | | | | | | | | | | | | | | 23.5 | | o/oo | | 7.9 | 0.1 | pH |
| 100 | ES_WATER | WCT | BA40 | 1993-09 | 09/13/1993 | | | | | | | | | | | | | | 25.5 | | o/oo | | 7.8 | 0.1 | pH |
| 101 | ES_WATER | WCT | BA40 | 1994-01 | 02/02/1994 | | | | | | | | | | | | | | 27.6 | 0.0 | o/oo | | 7.8 | 0.1 | pH |
| 102 | ES_WATER | WCT | BA40 | 1994-04 | 04/18/1994 | | | | | | | | | | | | | | 26.4 | 0.0 | o/oo | | 7.7 | 0.1 | pH |
| 103 | ES_WATER | WCT | BA40 | 1994-08 | 08/16/1994 | | | | | | | | | | | | | | 29.9 | 1.0 | o/oo | | 8.1 | 0.1 | pH |
| 104 | ES_WATER | WCT | BA40 | 1995-02 | 02/07/1995 | | | | | | | | | | | | | | 17.0 | | o/oo | | 7.7 | 0.1 | pH |
| 105 | ES_WATER | WCT | BA40 | 1995-04 | 04/24/1995 | | | | | | | | | | | | | | 16.0 | | o/oo | | 8.0 | 0.1 | pH |
| 106 | ES_WATER | WCT | BA40 | 1995-08 | 08/15/1995 | | | | | | | | | | | | | | 24.1 | | o/oo | | 7.9 | 0.1 | pH |
| 107 | ES_WATER | WCT | BA40 | 1996-02 | 02/06/1996 | | | | | | | | | | | | | | 20.1 | 1.0 | o/oo | | 7.8 | 0.0 | pH |
| 108 | ES_WATER | WCT | BA40 | 1996-04 | 05/02/1996 | | | | | | | | | | | | | | 16.1 | | o/oo | | 7.8 | 0.0 | pH |

**SFIA Mel Leong WQCP**
**Sanitary Treatment Plant**
**Table 6. Salinity Hardness**

| | | | | | | | | | | | | | | |
|---|---|---|---|---|---|---|---|---|---|---|---|---|---|---|
| 109 | ES_WATER | WCT | BA40 | 1996-07 | 07/29/1996 | | | | | 23.0 | | o/oo | 7.9 | 0.0 pH |
| 110 | ES_WATER | WCT | BA40 | 1997-01 | 01/22/1997 | | | | | 11.4 | | o/oo | 7.8 | 0.0 pH |
| 111 | ES_WATER | WCT | BA40 | 1997-04 | 04/16/1997 | | | | | | | | 8.2 | 0.0 pH |
| 112 | ES_WATER | WCT | BA40 | 1997-07 | 07/29/1997 | | | | | 29.1 | | o/oo | 7.7 | 0.0 pH |
| 113 | ES_WATER | WCT | BA40 | 1998-02 | 01/27/1998 | | | | | 19.0 | | o/oo | 7.7 | 0.0 pH |
| 114 | ES_WATER | WCT | BA40 | 1998-04 | 04/22/1998 | | | | | 17.3 | | o/oo | 8.4 | 0.0 pH |
| 115 | ES_WATER | WCT | BA40 | 1998-07 | 07/20/1998 | | | | | 20.7 | | o/oo | 8.0 | 0.0 pH |
| 116 | ES_WATER | WCT | BA40 | 1999-02 | 02/01/1999 | | | | | 25.2 | | o/oo | 7.8 | pH |
| 117 | ES_WATER | WCT | BA40 | 1999-04 | 04/12/1999 | | | | | 19.3 | | o/oo | 8.3 | pH |
| 118 | ES_WATER | WCT | BA40 | 1999-07 | 07/13/1999 | | | | | 27.7 | | o/oo | 8.0 | pH |
| 119 | ES_WATER | WCT | BA40 | 2000-02 | 02/01/2000 | | | | | 25.9 | 0.1 | o/oo | 7.8 | 0.0 pH |
| 120 | ES_WATER | WCT | BA40 | 2000-07 | 07/11/2000 | | | | | 27.6 | 0.1 | o/oo | 7.8 | 0.0 pH |
| 121 | ES_WATER | WCT | BA40 | 2001-02 | 02/06/2001 | | | | | 28.3 | 0.2 | o/oo | 8.2 | 0.0 pH |
| 122 | ES_WATER | WCT | BA40 | 2001-08 | 07/31/2001 | | | | | 29.8 | 0.2 | o/oo | 8.0 | 0.0 pH |

**SFIA Mel Leong WQCP**
**Sanitary Treatment Plant**
**Table 8. Dioxin Data**

Sort **Dioxin Data from San Francisco International Airport - Municipal Wastewater Treatment Plant**

| | Permit Title | Analyte | Sampled Date | Qualifier | Result, pg/L | Unit in pg/L | Reporting Limit / ML | MDL | CTR No. |
|---|---|---|---|---|---|---|---|---|---|
| 1 | | | | | | | | | |
| 2 | | | | | | | | | |
| 3 | | | | | | | | | |
| 4 | S.F. Airport, Water Quality Control Plant | 2,3,7,8-TCDD | 9/27/2002 | ND | 2.64 | pg/L | 2.64 | | 16-01 |
| 5 | S.F. Airport, Water Quality Control Plant | 2,3,7,8-TCDD | 2/28/2003 | ND | 1.77 | pg/L | 1.77 | | 16-01 |
| 6 | S.F. Airport, Water Quality Control Plant | 2,3,7,8-TCDD | 7/25/2003 | ND | 1.72 | pg/L | 1.72 | | 16-01 |
| 7 | S.F. Airport, Water Quality Control Plant | 2,3,7,8-TCDD | 3/30/2004 | ND | 3.9 | pg/L | 3.9 | | 16-01 |
| 8 | S.F. Airport, Water Quality Control Plant | 2,3,7,8-TCDD | 8/24/2004 | ND | 1.32 | pg/L | 2.24 | | 16-01 |
| 9 | S.F. Airport, Water Quality Control Plant | 2,3,7,8-TCDD | 3/22/2005 | ND | 0.543 | pg/L | 2.81 | | 16-01 |
| 10 | S.F. Airport, Water Quality Control Plant | 2,3,7,8-TCDD | 9/19/2005 | ND | 10 | pg/L | 10 | | 16-01 |
| 11 | S.F. Airport, Water Quality Control Plant | 2,3,7,8-TCDD | 3/13/2006 | ND | 0.975 | pg/L | 0.975 | | 16-01 |
| 12 | S.F. Airport, Water Quality Control Plant | 1,2,3,7,8-PeCDD | 9/27/2002 | ND | 3.32 | pg/L | 3.32 | | 16-02 |
| 13 | S.F. Airport, Water Quality Control Plant | 1,2,3,7,8-PeCDD | 2/28/2003 | ND | 2.9 | pg/L | 2.9 | | 16-02 |
| 14 | S.F. Airport, Water Quality Control Plant | 1,2,3,7,8-PeCDD | 7/25/2003 | ND | 3.34 | pg/L | 3.34 | | 16-02 |
| 15 | S.F. Airport, Water Quality Control Plant | 1,2,3,7,8-PeCDD | 3/30/2004 | ND | 11 | pg/L | 11.0 | | 16-02 |
| 16 | S.F. Airport, Water Quality Control Plant | 1,2,3,7,8-PeCDD | 8/24/2004 | ND | 1.97 | pg/L | 4.10 | | 16-02 |
| 17 | S.F. Airport, Water Quality Control Plant | 1,2,3,7,8-PeCDD | 3/22/2005 | ND | 0.771 | pg/L | 2.13 | | 16-02 |
| 18 | S.F. Airport, Water Quality Control Plant | 1,2,3,7,8-PeCDD | 9/19/2005 | ND | 50 | pg/L | 50 | | 16-02 |
| 19 | S.F. Airport, Water Quality Control Plant | 1,2,3,7,8-PeCDD | 3/13/2006 | ND | 0.844 | pg/L | 0.844 | | 16-02 |
| 20 | S.F. Airport, Water Quality Control Plant | 1,2,3,4,7,8-HxCDD | 9/27/2002 | ND | 4.43 | pg/L | 4.43 | | 16-03 |
| 21 | S.F. Airport, Water Quality Control Plant | 1,2,3,4,7,8-HxCDD | 2/28/2003 | ND | 3.67 | pg/L | 3.67 | | 16-03 |
| 22 | S.F. Airport, Water Quality Control Plant | 1,2,3,4,7,8-HxCDD | 7/25/2003 | ND | 4.28 | pg/L | 4.28 | | 16-03 |
| 23 | S.F. Airport, Water Quality Control Plant | 1,2,3,4,7,8-HxCDD | 3/30/2004 | ND | 11 | pg/L | 11.0 | | 16-03 |
| 24 | S.F. Airport, Water Quality Control Plant | 1,2,3,4,7,8-HxCDD | 8/24/2004 | ND | 2.86 | pg/L | 5.19 | | 16-03 |
| 25 | S.F. Airport, Water Quality Control Plant | 1,2,3,4,7,8-HxCDD | 3/22/2005 | ND | 0.845 | pg/L | 2.89 | | 16-03 |
| 26 | S.F. Airport, Water Quality Control Plant | 1,2,3,4,7,8-HxCDD | 9/19/2005 | ND | 50 | pg/L | 50 | | 16-03 |
| 27 | S.F. Airport, Water Quality Control Plant | 1,2,3,4,7,8-HxCDD | 3/13/2006 | ND | 0.704 | pg/L | 0.704 | | 16-03 |
| 28 | S.F. Airport, Water Quality Control Plant | 1,2,3,6,7,8-HxCDD | 9/27/2002 | ND | 4.97 | pg/L | 4.97 | | 16-04 |
| 29 | S.F. Airport, Water Quality Control Plant | 1,2,3,6,7,8-HxCDD | 2/28/2003 | ND | 4.07 | pg/L | 4.07 | | 16-04 |
| 30 | S.F. Airport, Water Quality Control Plant | 1,2,3,6,7,8-HxCDD | 7/25/2003 | ND | 4.62 | pg/L | 4.62 | | 16-04 |
| 31 | S.F. Airport, Water Quality Control Plant | 1,2,3,6,7,8-HxCDD | 3/30/2004 | ND | 10 | pg/L | 10.0 | | 16-04 |
| 32 | S.F. Airport, Water Quality Control Plant | 1,2,3,6,7,8-HxCDD | 8/24/2004 | ND | 2.82 | pg/L | 5.51 | | 16-04 |
| 33 | S.F. Airport, Water Quality Control Plant | 1,2,3,6,7,8-HxCDD | 3/22/2005 | ND | 1.05 | pg/L | 3.6 | | 16-04 |
| 34 | S.F. Airport, Water Quality Control Plant | 1,2,3,6,7,8-HxCDD | 9/19/2005 | ND | 50 | pg/L | 50 | | 16-04 |
| 35 | S.F. Airport, Water Quality Control Plant | 1,2,3,6,7,8-HxCDD | 3/13/2006 | ND | 0.758 | pg/L | 0.758 | | 16-04 |
| 36 | S.F. Airport, Water Quality Control Plant | 1,2,3,7,8,9-HxCDD | 9/27/2002 | ND | 4.62 | pg/L | 4.62 | | 16-05 |
| 37 | S.F. Airport, Water Quality Control Plant | 1,2,3,7,8,9-HxCDD | 2/28/2003 | ND | 3.28 | pg/L | 3.28 | | 16-05 |
| 38 | S.F. Airport, Water Quality Control Plant | 1,2,3,7,8,9-HxCDD | 7/25/2003 | ND | 4.15 | pg/L | 4.15 | | 16-05 |
| 39 | S.F. Airport, Water Quality Control Plant | 1,2,3,7,8,9-HxCDD | 3/30/2004 | ND | 10 | pg/L | 10.0 | | 16-05 |
| 40 | S.F. Airport, Water Quality Control Plant | 1,2,3,7,8,9-HxCDD | 8/24/2004 | ND | 2.68 | pg/L | 5.19 | | 16-05 |
| 41 | S.F. Airport, Water Quality Control Plant | 1,2,3,7,8,9-HxCDD | 3/22/2005 | ND | 0.91 | pg/L | 3.02 | | 16-05 |
| 42 | S.F. Airport, Water Quality Control Plant | 1,2,3,7,8,9-HxCDD | 9/19/2005 | ND | 50 | pg/L | 50 | | 16-05 |
| 43 | S.F. Airport, Water Quality Control Plant | 1,2,3,7,8,9-HxCDD | 3/13/2006 | ND | 0.804 | pg/L | 0.804 | | 16-05 |
| 44 | S.F. Airport, Water Quality Control Plant | 1,2,3,4,6,7,8-HpCDD | 9/27/2002 | ND | 5 | pg/L | 5.00 | | 16-06 |
| 45 | S.F. Airport, Water Quality Control Plant | 1,2,3,4,6,7,8-HpCDD | 2/28/2003 | ND | 3.14 | pg/L | 3.14 | | 16-06 |
| 46 | S.F. Airport, Water Quality Control Plant | 1,2,3,4,6,7,8-HpCDD | 7/25/2003 | ND | 3.85 | pg/L | 3.85 | | 16-06 |
| 47 | S.F. Airport, Water Quality Control Plant | 1,2,3,4,6,7,8-HpCDD | 3/30/2004 | ND | 11 | pg/L | 11.0 | | 16-06 |
| 48 | S.F. Airport, Water Quality Control Plant | 1,2,3,4,6,7,8-HpCDD | 8/24/2004 | ND | 2.4 | pg/L | 5.98 | | 16-06 |
| 49 | S.F. Airport, Water Quality Control Plant | 1,2,3,4,6,7,8-HpCDD | 3/22/2005 | ND | 1.18 | pg/L | 3 | | 16-06 |
| 50 | S.F. Airport, Water Quality Control Plant | 1,2,3,4,6,7,8-HpCDD | 9/19/2005 | ND | 50 | pg/L | 50 | | 16-06 |
| 51 | S.F. Airport, Water Quality Control Plant | 1,2,3,4,6,7,8-HpCDD | 3/13/2006 | ND | **0.919** | pg/L | 0.613 | | 16-06 |
| 52 | S.F. Airport, Water Quality Control Plant | OCDD | 9/27/2002 | ND | 6.26 | pg/L | 6.26 | | 16-07 |
| 53 | S.F. Airport, Water Quality Control Plant | OCDD | 2/28/2003 | ND | 5.62 | pg/L | 5.62 | | 16-07 |
| 54 | S.F. Airport, Water Quality Control Plant | OCDD | 7/25/2003 | ND | 4.42 | pg/L | 4.42 | | 16-07 |
| 55 | S.F. Airport, Water Quality Control Plant | OCDD | 3/30/2004 | ND | 13 | pg/L | 13.0 | | 16-07 |
| 56 | S.F. Airport, Water Quality Control Plant | OCDD | 8/24/2004 | ND | 4.89 | pg/L | 9.38 | | 16-07 |
| 57 | S.F. Airport, Water Quality Control Plant | OCDD | 3/22/2005 | ND | 2.26 | pg/L | 5.58 | | 16-07 |
| 58 | S.F. Airport, Water Quality Control Plant | OCDD | 9/19/2005 | ND | 100 | pg/L | 100 | | 16-07 |
| 59 | S.F. Airport, Water Quality Control Plant | OCDD | 3/13/2006 | ND | **2.49** | pg/L | 1.07 | | 16-07 |
| 60 | S.F. Airport, Water Quality Control Plant | 2,3,7,8-TCDF | 9/27/2002 | ND | 1.78 | pg/L | 1.78 | | 16-08 |
| 61 | S.F. Airport, Water Quality Control Plant | 2,3,7,8-TCDF | 2/28/2003 | ND | 1.24 | pg/L | 1.24 | | 16-08 |
| 62 | S.F. Airport, Water Quality Control Plant | 2,3,7,8-TCDF | 7/25/2003 | ND | 1.36 | pg/L | 1.36 | | 16-08 |

**SFIA Mel Leong WQCP**
**Sanitary Treatment Plant**
**Table 8. Dioxin Data**

| | | | | | | | | |
|---|---|---|---|---|---|---|---|---|
| 63 | S.F. Airport, Water Quality Control Plant | 2,3,7,8-TCDF | 3/30/2004 | ND | 4 | pg/L | 4.0 | **16-08** |
| 64 | S.F. Airport, Water Quality Control Plant | 2,3,7,8-TCDF | 8/24/2004 | ND | 1.01 | pg/L | 1.40 | **16-08** |
| 65 | S.F. Airport, Water Quality Control Plant | 2,3,7,8-TCDF | 3/22/2005 | ND | 0.449 | pg/L | 2.16 | **16-08** |
| 66 | S.F. Airport, Water Quality Control Plant | 2,3,7,8-TCDF | 9/19/2005 | ND | 10 | pg/L | 10 | **16-08** |
| 67 | S.F. Airport, Water Quality Control Plant | 2,3,7,8-TCDF | 3/13/2006 | ND | 0.675 | pg/L | 0.675 | **16-08** |
| 68 | S.F. Airport, Water Quality Control Plant | 1,2,3,7,8-PeCDF | 9/27/2002 | ND | 3.19 | pg/L | 3.19 | **16-09** |
| 69 | S.F. Airport, Water Quality Control Plant | 1,2,3,7,8-PeCDF | 2/28/2003 | ND | 3.15 | pg/L | 3.15 | **16-09** |
| 70 | S.F. Airport, Water Quality Control Plant | 1,2,3,7,8-PeCDF | 7/25/2003 | ND | 3.7 | pg/L | 3.70 | **16-09** |
| 71 | S.F. Airport, Water Quality Control Plant | 1,2,3,7,8-PeCDF | 3/30/2004 | ND | 6.5 | pg/L | 6.5 | **16-09** |
| 72 | S.F. Airport, Water Quality Control Plant | 1,2,3,7,8-PeCDF | 8/24/2004 | ND | 1.8 | pg/L | 4.65 | **16-09** |
| 73 | S.F. Airport, Water Quality Control Plant | 1,2,3,7,8-PeCDF | 3/22/2005 | ND | 1.05 | pg/L | 2.11 | **16-09** |
| 74 | S.F. Airport, Water Quality Control Plant | 1,2,3,7,8-PeCDF | 9/19/2005 | ND | 50 | pg/L | 50 | **16-09** |
| 75 | S.F. Airport, Water Quality Control Plant | 1,2,3,7,8-PeCDF | 3/13/2006 | ND | 0.95 | pg/L | 0.95 | **16-09** |
| 76 | S.F. Airport, Water Quality Control Plant | 2,3,4,7,8-PeCDF | 9/27/2002 | ND | 2.88 | pg/L | 2.88 | **16-10** |
| 77 | S.F. Airport, Water Quality Control Plant | 2,3,4,7,8-PeCDF | 2/28/2003 | ND | 2.97 | pg/L | 2.97 | **16-10** |
| 78 | S.F. Airport, Water Quality Control Plant | 2,3,4,7,8-PeCDF | 7/25/2003 | ND | 3.28 | pg/L | 3.28 | **16-10** |
| 79 | S.F. Airport, Water Quality Control Plant | 2,3,4,7,8-PeCDF | 3/30/2004 | ND | 7.9 | pg/L | 7.9 | **16-10** |
| 80 | S.F. Airport, Water Quality Control Plant | 2,3,4,7,8-PeCDF | 8/24/2004 | ND | 1.77 | pg/L | 4.14 | **16-10** |
| 81 | S.F. Airport, Water Quality Control Plant | 2,3,4,7,8-PeCDF | 3/22/2005 | ND | 1.08 | pg/L | 2 | **16-10** |
| 82 | S.F. Airport, Water Quality Control Plant | 2,3,4,7,8-PeCDF | 9/19/2005 | ND | 50 | pg/L | 50 | **16-10** |
| 83 | S.F. Airport, Water Quality Control Plant | 2,3,4,7,8-PeCDF | 3/13/2006 | ND | 0.892 | pg/L | 0.892 | **16-10** |
| 84 | S.F. Airport, Water Quality Control Plant | 1,2,3,4,7,8-HxCDF | 9/27/2002 | ND | 1.22 | pg/L | 1.22 | **16-11** |
| 85 | S.F. Airport, Water Quality Control Plant | 1,2,3,4,7,8-HxCDF | 2/28/2003 | ND | 0.871 | pg/L | 0.871 | **16-11** |
| 86 | S.F. Airport, Water Quality Control Plant | 1,2,3,4,7,8-HxCDF | 7/25/2003 | ND | 0.918 | pg/L | 0.918 | **16-11** |
| 87 | S.F. Airport, Water Quality Control Plant | 1,2,3,4,7,8-HxCDF | 3/30/2004 | ND | 11 | pg/L | 11.0 | **16-11** |
| 88 | S.F. Airport, Water Quality Control Plant | 1,2,3,4,7,8-HxCDF | 8/24/2004 | ND | 1 | pg/L | 1.57 | **16-11** |
| 89 | S.F. Airport, Water Quality Control Plant | 1,2,3,4,7,8-HxCDF | 3/22/2005 | ND | 0.545 | pg/L | 1.01 | **16-11** |
| 90 | S.F. Airport, Water Quality Control Plant | 1,2,3,4,7,8-HxCDF | 9/19/2005 | ND | 50 | pg/L | 50 | **16-11** |
| 91 | S.F. Airport, Water Quality Control Plant | 1,2,3,4,7,8-HxCDF | 3/13/2006 | ND | 0.567 | pg/L | 0.567 | **16-11** |
| 92 | S.F. Airport, Water Quality Control Plant | 1,2,3,6,7,8-HxCDF | 9/27/2002 | ND | 1.51 | pg/L | 1.51 | **16-12** |
| 93 | S.F. Airport, Water Quality Control Plant | 1,2,3,6,7,8-HxCDF | 2/28/2003 | ND | 1.08 | pg/L | 1.08 | **16-12** |
| 94 | S.F. Airport, Water Quality Control Plant | 1,2,3,6,7,8-HxCDF | 7/25/2003 | ND | 1.09 | pg/L | 1.09 | **16-12** |
| 95 | S.F. Airport, Water Quality Control Plant | 1,2,3,6,7,8-HxCDF | 3/30/2004 | ND | 9.4 | pg/L | 9.4 | **16-12** |
| 96 | S.F. Airport, Water Quality Control Plant | 1,2,3,6,7,8-HxCDF | 8/24/2004 | ND | 1.01 | pg/L | 2.13 | **16-12** |
| 97 | S.F. Airport, Water Quality Control Plant | 1,2,3,6,7,8-HxCDF | 3/22/2005 | ND | 0.355 | pg/L | 0.94 | **16-12** |
| 98 | S.F. Airport, Water Quality Control Plant | 1,2,3,6,7,8-HxCDF | 9/19/2005 | ND | 50 | pg/L | 50 | **16-12** |
| 99 | S.F. Airport, Water Quality Control Plant | 1,2,3,6,7,8-HxCDF | 3/13/2006 | ND | 0.596 | pg/L | 0.596 | **16-12** |
| 100 | S.F. Airport, Water Quality Control Plant | 2,3,4,6,7,8-HxCDF | 9/27/2002 | ND | 1.46 | pg/L | 1.46 | **16-13** |
| 101 | S.F. Airport, Water Quality Control Plant | 2,3,4,6,7,8-HxCDF | 2/28/2003 | ND | 1.1 | pg/L | 1.1 | **16-13** |
| 102 | S.F. Airport, Water Quality Control Plant | 2,3,4,6,7,8-HxCDF | 7/25/2003 | ND | 1.29 | pg/L | 1.29 | **16-13** |
| 103 | S.F. Airport, Water Quality Control Plant | 2,3,4,6,7,8-HxCDF | 3/30/2004 | ND | 6.9 | pg/L | 6.9 | **16-13** |
| 104 | S.F. Airport, Water Quality Control Plant | 2,3,4,6,7,8-HxCDF | 8/24/2004 | ND | 1.01 | pg/L | 2.04 | **16-13** |
| 105 | S.F. Airport, Water Quality Control Plant | 2,3,4,6,7,8-HxCDF | 3/22/2005 | ND | 0.37 | pg/L | 0.884 | **16-13** |
| 106 | S.F. Airport, Water Quality Control Plant | 2,3,4,6,7,8-HxCDF | 9/19/2005 | ND | 50 | pg/L | 50 | **16-13** |
| 107 | S.F. Airport, Water Quality Control Plant | 2,3,4,6,7,8-HxCDF | 3/13/2006 | ND | 0.58 | pg/L | 0.58 | **16-13** |
| 108 | S.F. Airport, Water Quality Control Plant | 1,2,3,7,8,9-HxCDF | 9/27/2002 | ND | 1.87 | pg/L | 1.87 | **16-14** |
| 109 | S.F. Airport, Water Quality Control Plant | 1,2,3,7,8,9-HxCDF | 2/28/2003 | ND | 1.35 | pg/L | 1.35 | **16-14** |
| 110 | S.F. Airport, Water Quality Control Plant | 1,2,3,7,8,9-HxCDF | 7/25/2003 | ND | 1.55 | pg/L | 1.55 | **16-14** |
| 111 | S.F. Airport, Water Quality Control Plant | 1,2,3,7,8,9-HxCDF | 3/30/2004 | ND | 6.4 | pg/L | 6.4 | **16-14** |
| 112 | S.F. Airport, Water Quality Control Plant | 1,2,3,7,8,9-HxCDF | 8/24/2004 | ND | 1.06 | pg/L | 2.98 | **16-14** |
| 113 | S.F. Airport, Water Quality Control Plant | 1,2,3,7,8,9-HxCDF | 3/22/2005 | ND | 0.476 | pg/L | 1.21 | **16-14** |
| 114 | S.F. Airport, Water Quality Control Plant | 1,2,3,7,8,9-HxCDF | 9/19/2005 | ND | 50 | pg/L | 50 | **16-14** |
| 115 | S.F. Airport, Water Quality Control Plant | 1,2,3,7,8,9-HxCDF | 3/13/2006 | ND | 0.597 | pg/L | 0.597 | **16-14** |
| 116 | S.F. Airport, Water Quality Control Plant | 1,2,3,4,6,7,8-HpCDF | 9/27/2002 | ND | 2.73 | pg/L | 2.73 | **16-15** |
| 117 | S.F. Airport, Water Quality Control Plant | 1,2,3,4,6,7,8-HpCDF | 2/28/2003 | ND | 1.32 | pg/L | 1.32 | **16-15** |
| 118 | S.F. Airport, Water Quality Control Plant | 1,2,3,4,6,7,8-HpCDF | 7/25/2003 | ND | 1.78 | pg/L | 1.78 | **16-15** |
| 119 | S.F. Airport, Water Quality Control Plant | 1,2,3,4,6,7,8-HpCDF | 3/30/2004 | ND | 5.1 | pg/L | 5.1 | **16-15** |
| 120 | S.F. Airport, Water Quality Control Plant | 1,2,3,4,6,7,8-HpCDF | 8/24/2004 | ND | 1.03 | pg/L | 4.14 | **16-15** |
| 121 | S.F. Airport, Water Quality Control Plant | 1,2,3,4,6,7,8-HpCDF | 3/22/2005 | ND | 0.516 | pg/L | 1.56 | **16-15** |
| 122 | S.F. Airport, Water Quality Control Plant | 1,2,3,4,6,7,8-HpCDF | 9/19/2005 | ND | 50 | pg/L | 50 | **16-15** |
| 123 | S.F. Airport, Water Quality Control Plant | 1,2,3,4,6,7,8-HpCDF | 3/13/2006 | ND | 0.811 | pg/L | 0.811 | **16-15** |
| 124 | S.F. Airport, Water Quality Control Plant | 1,2,3,4,7,8,9-HpCDF | 9/27/2002 | ND | 3.64 | pg/L | 3.64 | **16-16** |
| 125 | S.F. Airport, Water Quality Control Plant | 1,2,3,4,7,8,9-HpCDF | 2/28/2003 | ND | 1.65 | pg/L | 1.65 | **16-16** |
| 126 | S.F. Airport, Water Quality Control Plant | 1,2,3,4,7,8,9-HpCDF | 7/25/2003 | ND | 2.52 | pg/L | 2.52 | **16-16** |

**SFIA Mel Leong WQCP**
**Sanitary Treatment Plant**
**Table 8. Dioxin Data**

| | | | | | | | | |
|---|---|---|---|---|---|---|---|---|
| 127 | S.F. Airport, Water Quality Control Plant | 1,2,3,4,7,8,9-HpCDF | 3/30/2004 | ND | 7.1 | pg/L | 7.1 | **16-16** |
| 128 | S.F. Airport, Water Quality Control Plant | 1,2,3,4,7,8,9-HpCDF | 8/24/2004 | ND | 1.25 | pg/L | 5.52 | **16-16** |
| 129 | S.F. Airport, Water Quality Control Plant | 1,2,3,4,7,8,9-HpCDF | 3/22/2005 | ND | 0.654 | pg/L | 2.03 | **16-16** |
| 130 | S.F. Airport, Water Quality Control Plant | 1,2,3,4,7,8,9-HpCDF | 9/19/2005 | ND | 50 | pg/L | 50 | **16-16** |
| 131 | S.F. Airport, Water Quality Control Plant | 1,2,3,4,7,8,9-HpCDF | 3/13/2006 | ND | 0.912 | pg/L | 0.912 | **16-16** |
| 132 | S.F. Airport, Water Quality Control Plant | OCDF | 9/27/2002 | ND | 9.18 | pg/L | 9.18 | **16-17** |
| 133 | S.F. Airport, Water Quality Control Plant | OCDF | 2/28/2003 | ND | 5.01 | pg/L | 5.01 | **16-17** |
| 134 | S.F. Airport, Water Quality Control Plant | OCDF | 7/25/2003 | ND | 5.04 | pg/L | 5.04 | **16-17** |
| 135 | S.F. Airport, Water Quality Control Plant | OCDF | 3/30/2004 | ND | 14 | pg/L | 14.0 | **16-17** |
| 136 | S.F. Airport, Water Quality Control Plant | OCDF | 8/24/2004 | ND | 3.97 | pg/L | 9.25 | **16-17** |
| 137 | S.F. Airport, Water Quality Control Plant | OCDF | 3/22/2005 | ND | 1.22 | pg/L | 3.5 | **16-17** |
| 138 | S.F. Airport, Water Quality Control Plant | OCDF | 9/19/2005 | ND | 100 | pg/L | 100 | **16-17** |
| 139 | S.F. Airport, Water Quality Control Plant | OCDF | 3/13/2006 | ND | 1.09 | pg/L | 1.09 | **16-17** |
| 140 | S.F. Airport, Water Quality Control Plant | TCDD-TEQ | 9/27/2002 | ND | 1.22 | pg/L | 1.22 | **16-TEQ** |
| 141 | S.F. Airport, Water Quality Control Plant | TCDD-TEQ | 2/28/2003 | ND | 0.871 | pg/L | 0.871 | **16-TEQ** |
| 142 | S.F. Airport, Water Quality Control Plant | TCDD-TEQ | 7/25/2003 | ND | 0.918 | pg/L | 0.918 | **16-TEQ** |
| 143 | S.F. Airport, Water Quality Control Plant | TCDD-TEQ | 3/30/2004 | ND | 3.9 | pg/L | 3.9 | **16-TEQ** |
| 144 | S.F. Airport, Water Quality Control Plant | TCDD-TEQ | 8/24/2004 | ND | 1 | pg/L | 1 | **16-TEQ** |
| 145 | S.F. Airport, Water Quality Control Plant | TCDD-TEQ | 3/22/2005 | ND | 0.355 | pg/L | 0.355 | **16-TEQ** |
| 146 | S.F. Airport, Water Quality Control Plant | TCDD-TEQ | 9/19/2005 | ND | 10 | pg/L | 10 | **16-TEQ** |
| 147 | S.F. Airport, Water Quality Control Plant | TCDD-TEQ | 3/13/2006 | ND | 0.567 | pg/L | 0.567 | **16-TEQ** |

SFIA Mel Leong WQCP
Sanitary Treatment Plant
Table 9. Total PAHs

| Sort | PermitTitle | Pollutant | Date | CTRS | Value | Unit | ML | MDL | RDL | CTR | Comment |
|---|---|---|---|---|---|---|---|---|---|---|---|
| 1 | | | | | | | | | | | |
| 2 | | | | | | | | | | | |
| 874 | S.F. Airport, Water Quality Control Plant | Acenaphthene | 9/27/02 | ND | 2.3 | ug/l | 4.8 | 2.3 | | 56 | 3520C/8310 |
| 875 | S.F. Airport, Water Quality Control Plant | Acenaphthene | 2/28/03 | ND | 2.3 | ug/l | 4.7 | 2.3 | | 56 | 3520C/8310 |
| 876 | S.F. Airport, Water Quality Control Plant | Acenaphthene | 7/25/03 | ND | 2.4 | ug/l | 5 | 2.4 | | 56 | 3520C/8310 |
| 877 | S.F. Airport, Water Quality Control Plant | Acenaphthene | 3/30/04 | ND | 0.52 | ug/l | 0.52 | 0.11 | | 56 | 3520C/8310 |
| 878 | S.F. Airport, Water Quality Control Plant | Acenaphthene | 8/24/04 | ND | 0.11 | ug/l | 0.52 | 0.11 | | 56 | 3520C/8310 |
| 879 | S.F. Airport, Water Quality Control Plant | Acenaphthene | 3/22/05 | ND | 0.11 | ug/l | 0.52 | 0.11 | | 56 | 3520C/8310 |
| 880 | S.F. Airport, Water Quality Control Plant | Acenaphthene | 9/19/05 | ND | 0.13 | ug/l | 1 | 0.13 | | 56 | 3520C/8310 |
| 881 | S.F. Airport, Water Quality Control Plant | Acenaphthene | 3/13/06 | ND | 0.13 | ug/l | 1 | 0.13 | | 56 | 3520C/8310 |
| 882 | S.F. Airport, Water Quality Control Plant | Acenaphthylene | 9/27/02 | ND | 2.4 | ug/l | 4.8 | 2.4 | | 57 | 3520C/8310 |
| 883 | S.F. Airport, Water Quality Control Plant | Acenaphthylene | 2/28/03 | ND | 2.4 | ug/l | 4.7 | 2.4 | | 57 | 3520C/8310 |
| 884 | S.F. Airport, Water Quality Control Plant | Acenaphthylene | 7/25/03 | ND | 2.6 | ug/l | 5 | 2.6 | | 57 | 3520C/8310 |
| 885 | S.F. Airport, Water Quality Control Plant | Acenaphthylene | 3/30/04 | ND | 0.39 | ug/l | 0.39 | 0.07 | | 57 | 3520C/8310 |
| 886 | S.F. Airport, Water Quality Control Plant | Acenaphthylene | 8/24/04 | ND | 0.07 | ug/l | 0.39 | 0.07 | | 57 | 3520C/8310 |
| 887 | S.F. Airport, Water Quality Control Plant | Acenaphthylene | 3/22/05 | ND | 0.07 | ug/l | 0.39 | 0.07 | | 57 | 3520C/8310 |
| 888 | S.F. Airport, Water Quality Control Plant | Acenaphthylene | 9/19/05 | ND | 0.4 | ug/l | 1 | 0.4 | | 57 | 3520C/8310 |
| 889 | S.F. Airport, Water Quality Control Plant | Acenaphthylene | 3/13/06 | ND | 0.4 | ug/l | 1 | 0.4 | | 57 | 3520C/8310 |
| 890 | S.F. Airport, Water Quality Control Plant | Anthracene | 9/27/02 | ND | 2.3 | ug/l | 4.8 | 2.3 | | 58 | 3520C/8310 |
| 891 | S.F. Airport, Water Quality Control Plant | Anthracene | 2/28/03 | ND | 2.3 | ug/l | 4.7 | 2.3 | | 58 | 3520C/8310 |
| 892 | S.F. Airport, Water Quality Control Plant | Anthracene | 7/25/03 | ND | 2.4 | ug/l | 5 | 2.4 | | 58 | 3520C/8310 |
| 893 | S.F. Airport, Water Quality Control Plant | Anthracene | 3/30/04 | ND | 0.52 | ug/l | 0.52 | 0.01 | | 58 | 3520C/8310 |
| 894 | S.F. Airport, Water Quality Control Plant | Anthracene | 8/24/04 | ND | 0.01 | ug/l | 0.02 | 0.01 | | 58 | 3520C/8310 |
| 895 | S.F. Airport, Water Quality Control Plant | Anthracene | 3/22/05 | ND | 0.01 | ug/l | 0.02 | 0.01 | | 58 | 3520C/8310 |
| 896 | S.F. Airport, Water Quality Control Plant | Anthracene | 9/19/05 | ND | 0.0083 | ug/l | 0.05 | 0.0083 | | 58 | 3520C/8310 |
| 897 | S.F. Airport, Water Quality Control Plant | Anthracene | 3/13/06 | ND | 0.0083 | ug/l | 0.05 | 0.0083 | | 58 | 3520C/8310 |
| 906 | S.F. Airport, Water Quality Control Plant | Benzo(a)Anthracene or 1,2-Benzanthracene | 9/27/02 | ND | 1.2 | ug/l | 4.8 | 1.2 | | 60 | 3520C/8310 |
| 907 | S.F. Airport, Water Quality Control Plant | Benzo(a)Anthracene or 1,2-Benzanthracene | 2/28/03 | ND | 4.7 | ug/l | 4.7 | 1.2 | | 60 | 3520C/8310 |
| 908 | S.F. Airport, Water Quality Control Plant | Benzo(a)Anthracene or 1,2-Benzanthracene | 7/25/03 | ND | 1.3 | ug/l | 5 | 1.3 | | 60 | 3520C/8310 |
| 909 | S.F. Airport, Water Quality Control Plant | Benzo(a)Anthracene or 1,2-Benzanthracene | 3/30/04 | ND | 0.1 | ug/l | 0.1 | 0.02 | | 60 | 3520C/8310 |
| 910 | S.F. Airport, Water Quality Control Plant | Benzo(a)Anthracene or 1,2-Benzanthracene | 8/24/04 | ND | 0.02 | ug/l | 0.1 | 0.02 | | 60 | 3520C/8310 |
| 911 | S.F. Airport, Water Quality Control Plant | Benzo(a)Anthracene or 1,2-Benzanthracene | 3/22/05 | ND | 0.02 | ug/l | 0.1 | 0.02 | | 60 | 3520C/8310 |
| 912 | S.F. Airport, Water Quality Control Plant | Benzo(a)Anthracene or 1,2-Benzanthracene | 9/19/05 | ND | 0.015 | ug/l | 0.05 | 0.015 | | 60 | 3520C/8310 |
| 913 | S.F. Airport, Water Quality Control Plant | Benzo(a)Anthracene or 1,2-Benzanthracene | 3/13/06 | ND | 0.015 | ug/l | 0.05 | 0.015 | | 60 | 3520C/8310 |
| 914 | S.F. Airport, Water Quality Control Plant | Benzo(a)Pyrene | 9/27/02 | ND | 0.05 | ug/l | 0.05 | | | 61 | 3520C/8310 |
| 915 | S.F. Airport, Water Quality Control Plant | Benzo(a)Pyrene | 2/28/03 | ND | 4.7 | ug/l | 4.7 | 2.1 | | 61 | 3520C/8310 |
| 916 | S.F. Airport, Water Quality Control Plant | Benzo(a)Pyrene | 7/25/03 | ND | 2.2 | ug/l | 5 | 2.2 | | 61 | 3520C/8310 |
| 917 | S.F. Airport, Water Quality Control Plant | Benzo(a)Pyrene | 3/30/04 | ND | 0.12 | ug/l | 0.12 | 0.02 | | 61 | 3520C/8310 |
| 918 | S.F. Airport, Water Quality Control Plant | Benzo(a)Pyrene | 8/24/04 | ND | 0.02 | ug/l | 0.12 | 0.02 | | 61 | 3520C/8310 |
| 919 | S.F. Airport, Water Quality Control Plant | Benzo(a)Pyrene | 3/22/05 | ND | 0.02 | ug/l | 0.12 | 0.02 | | 61 | 3520C/8310 |
| 920 | S.F. Airport, Water Quality Control Plant | Benzo(a)Pyrene | 9/19/05 | ND | 0.018 | ug/l | 0.05 | 0.018 | | 61 | 3520C/8310 |
| 921 | S.F. Airport, Water Quality Control Plant | Benzo(a)Pyrene | 3/13/06 | ND | 0.018 | ug/l | 0.05 | 0.018 | | 61 | 3520C/8310 |
| 922 | S.F. Airport, Water Quality Control Plant | Benzo(b)Fluoranthene or 3,4 Benzofluoranthene | 9/27/02 | ND | 2.1 | ug/l | 4.8 | 2.1 | | 62 | 3520C/8310 |
| 923 | S.F. Airport, Water Quality Control Plant | Benzo(b)Fluoranthene or 3,4 Benzofluoranthene | 2/28/03 | ND | 2.1 | ug/l | 4.7 | 2.1 | | 62 | 3520C/8310 |
| 924 | S.F. Airport, Water Quality Control Plant | Benzo(b)Fluoranthene or 3,4 Benzofluoranthene | 7/25/03 | ND | 2.2 | ug/l | 5 | 2.2 | | 62 | 3520C/8310 |
| 925 | S.F. Airport, Water Quality Control Plant | Benzo(b)Fluoranthene or 3,4 Benzofluoranthene | 3/30/04 | ND | 0.1 | ug/l | 0.1 | 0.02 | | 62 | 3520C/8310 |
| 926 | S.F. Airport, Water Quality Control Plant | Benzo(b)Fluoranthene or 3,4 Benzofluoranthene | 8/24/04 | ND | 0.03 | ug/l | 0.12 | 0.03 | | 62 | 3520C/8310 |
| 927 | S.F. Airport, Water Quality Control Plant | Benzo(b)Fluoranthene or 3,4 Benzofluoranthene | 3/22/05 | ND | 0.02 | ug/l | 0.1 | 0.02 | | 62 | 3520C/8310 |
| 928 | S.F. Airport, Water Quality Control Plant | Benzo(b)Fluoranthene or 3,4 Benzofluoranthene | 9/19/05 | ND | 0.014 | ug/l | 0.1 | 0.014 | | 62 | 3520C/8310 |
| 929 | S.F. Airport, Water Quality Control Plant | Benzo(b)Fluoranthene or 3,4 Benzofluoranthene | 3/13/06 | ND | 0.014 | ug/l | 0.1 | 0.014 | | 62 | 3520C/8310 |
| 930 | S.F. Airport, Water Quality Control Plant | Benzo(ghi)Perylene | 9/27/02 | ND | 5.9 | ug/l | 9.5 | 5.9 | | 63 | 3520C/8310 |
| 931 | S.F. Airport, Water Quality Control Plant | Benzo(ghi)Perylene | 2/28/03 | ND | 5.8 | ug/l | 9.4 | 5.8 | | 63 | 3520C/8310 |
| 932 | S.F. Airport, Water Quality Control Plant | Benzo(ghi)Perylene | 7/25/03 | ND | 6.2 | ug/l | 10 | 6.2 | | 63 | 3520C/8310 |
| 933 | S.F. Airport, Water Quality Control Plant | Benzo(ghi)Perylene | 3/30/04 | ND | 0.09 | ug/l | 0.09 | 0.02 | | 63 | 3520C/8310 |
| 934 | S.F. Airport, Water Quality Control Plant | Benzo(ghi)Perylene | 8/24/04 | ND | 0.02 | ug/l | 0.09 | 0.02 | | 63 | 3520C/8310 |
| 935 | S.F. Airport, Water Quality Control Plant | Benzo(ghi)Perylene | 3/22/05 | ND | 0.02 | ug/l | 0.09 | 0.02 | | 63 | 3520C/8310 |
| 936 | S.F. Airport, Water Quality Control Plant | Benzo(ghi)Perylene | 9/19/05 | ND | 0.034 | ug/l | 0.1 | 0.034 | | 63 | 3520C/8310 |
| 937 | S.F. Airport, Water Quality Control Plant | Benzo(ghi)Perylene | 3/13/06 | ND | 0.034 | ug/l | 0.1 | 0.034 | | 63 | 3520C/8310 |
| 938 | S.F. Airport, Water Quality Control Plant | Benzo(k)Fluoranthene | 9/27/02 | ND | 2.6 | ug/l | 4.8 | 2.6 | | 64 | 3520C/8310 |
| 939 | S.F. Airport, Water Quality Control Plant | Benzo(k)Fluoranthene | 2/28/03 | ND | 2.5 | ug/l | 4.7 | 2.5 | | 64 | 3520C/8310 |
| 940 | S.F. Airport, Water Quality Control Plant | Benzo(k)Fluoranthene | 7/25/03 | ND | 2.7 | ug/l | 5 | 2.7 | | 64 | 3520C/8310 |
| 941 | S.F. Airport, Water Quality Control Plant | Benzo(k)Fluoranthene | 3/30/04 | ND | 0.12 | ug/l | 0.12 | 0.02 | | 64 | 3520C/8310 |
| 942 | S.F. Airport, Water Quality Control Plant | Benzo(k)Fluoranthene | 8/24/04 | ND | 0.03 | ug/l | 0.12 | 0.03 | | 64 | 3520C/8310 |
| 943 | S.F. Airport, Water Quality Control Plant | Benzo(k)Fluoranthene | 3/22/05 | ND | 0.03 | ug/l | 0.12 | 0.03 | | 64 | 3520C/8310 |
| 944 | S.F. Airport, Water Quality Control Plant | Benzo(k)Fluoranthene | 9/19/05 | ND | 0.019 | ug/l | 0.05 | 0.019 | | 64 | 3520C/8310 |
| 945 | S.F. Airport, Water Quality Control Plant | Benzo(k)Fluoranthene | 3/13/06 | ND | 0.019 | ug/l | 0.1 | 0.019 | | 64 | 3520C/8310 |
| 1010 | S.F. Airport, Water Quality Control Plant | Chrysene | 9/27/02 | ND | 1 | ug/l | 4.8 | 1 | | 73 | 8270C |
| 1011 | S.F. Airport, Water Quality Control Plant | Chrysene | 2/28/03 | ND | 1 | ug/l | 4.7 | 1 | | 73 | 8270C |
| 1012 | S.F. Airport, Water Quality Control Plant | Chrysene | 7/25/03 | ND | 1.1 | ug/l | 5 | 1.1 | | 73 | 8270C |
| 1013 | S.F. Airport, Water Quality Control Plant | Chrysene | 3/30/04 | ND | 0.9 | ug/l | 0.9 | 0.9 | | 73 | 8270C |
| 1014 | S.F. Airport, Water Quality Control Plant | Chrysene | 8/24/04 | ND | 0.42 | ug/l | 1 | 0.42 | | 73 | 8270C |
| 1015 | S.F. Airport, Water Quality Control Plant | Chrysene | 3/22/05 | ND | 0.42 | ug/l | 1 | 0.42 | | 73 | 8270C |
| 1016 | S.F. Airport, Water Quality Control Plant | Chrysene | 9/19/05 | ND | 0.5 | ug/l | 4.8 | 0.5 | | 73 | 8270C |
| 1017 | S.F. Airport, Water Quality Control Plant | Chrysene | 3/13/06 | ND | 0.49 | ug/l | 4.7 | 0.49 | | 73 | 8270C |
| 1018 | S.F. Airport, Water Quality Control Plant | Dibenzo(a,h)Anthracene | 9/27/02 | ND | 3.9 | ug/l | 4.8 | 3.9 | | 74 | 3520C/8310 |
| 1019 | S.F. Airport, Water Quality Control Plant | Dibenzo(a,h)Anthracene | 2/28/03 | ND | 3.9 | ug/l | 4.7 | 3.9 | | 74 | 3520C/8310 |
| 1020 | S.F. Airport, Water Quality Control Plant | Dibenzo(a,h)Anthracene | 7/25/03 | ND | 4.1 | ug/l | 5 | 4.1 | | 74 | 3520C/8310 |
| 1021 | S.F. Airport, Water Quality Control Plant | Dibenzo(a,h)Anthracene | 3/30/04 | ND | 0.09 | ug/l | 0.09 | 0.02 | | 74 | 3520C/8310 |
| 1022 | S.F. Airport, Water Quality Control Plant | Dibenzo(a,h)Anthracene | 8/24/04 | ND | 0.02 | ug/l | 0.09 | 0.02 | | 74 | 3520C/8310 |
| 1023 | S.F. Airport, Water Quality Control Plant | Dibenzo(a,h)Anthracene | 3/22/05 | ND | 0.02 | ug/l | 0.09 | 0.02 | | 74 | 3520C/8310 |
| 1024 | S.F. Airport, Water Quality Control Plant | Dibenzo(a,h)Anthracene | 9/19/05 | ND | 0.011 | ug/l | 0.1 | 0.011 | | 74 | 3520C/8310 |
| 1025 | S.F. Airport, Water Quality Control Plant | Dibenzo(a,h)Anthracene | 3/13/06 | ND | 0.011 | ug/l | 0.1 | 0.011 | | 74 | 3520C/8310 |
| 1114 | S.F. Airport, Water Quality Control Plant | Fluoranthene | 9/27/02 | ND | 2 | ug/l | 4.8 | 2 | | 86 | 3520C/8310 |
| 1115 | S.F. Airport, Water Quality Control Plant | Fluoranthene | 2/28/03 | ND | 1.9 | ug/l | 4.7 | 1.9 | | 86 | 3520C/8310 |
| 1116 | S.F. Airport, Water Quality Control Plant | Fluoranthene | 7/25/03 | ND | 2 | ug/l | 5 | 2 | | 86 | 3520C/8310 |
| 1117 | S.F. Airport, Water Quality Control Plant | Fluoranthene | 3/30/04 | ND | 0.19 | ug/l | 0.19 | 0.06 | | 86 | 3520C/8310 |
| 1118 | S.F. Airport, Water Quality Control Plant | Fluoranthene | 8/24/04 | ND | 0.06 | ug/l | 0.19 | 0.06 | | 86 | 3520C/8310 |
| 1119 | S.F. Airport, Water Quality Control Plant | Fluoranthene | 3/22/05 | ND | 0.06 | ug/l | 0.19 | 0.06 | | 86 | 3520C/8310 |

Sort

# SF International Airport, Water Quality Control Plant - Priority Pollutant Data (2002-2006) - Updated On September 18, 2006)

SFIA McLeong WQCP
Sanitary Treatment Plant
Table 9. Total PAHs

| Sort 1 | PermitTitle | Pollutant | Date | CTRS | Value | Unit | ML | MDL | RDL | CTR | Comment |
|---|---|---|---|---|---|---|---|---|---|---|---|
| 1120 | S.F. Airport, Water Quality Control Plant | Fluoranthene | 9/19/05 | ND | 0.031 | ug/l | 0.1 | 0.031 | | 86 | 3520C/8310 |
| 1121 | S.F. Airport, Water Quality Control Plant | Fluoranthene | 3/13/06 | ND | 0.031 | ug/l | 0.1 | 0.031 | | 86 | 3520C/8310 |
| 1122 | S.F. Airport, Water Quality Control Plant | Fluorene | 9/27/02 | ND | 1.8 | ug/l | 4.8 | 1.8 | | 87 | 3520C/8310 |
| 1123 | S.F. Airport, Water Quality Control Plant | Fluorene | 2/28/03 | ND | 1.8 | ug/l | 4.7 | 1.8 | | 87 | 3520C/8310 |
| 1124 | S.F. Airport, Water Quality Control Plant | Fluorene | 7/25/03 | ND | 5 | ug/l | 5 | 1.9 | | 87 | 3520C/8310 |
| 1125 | S.F. Airport, Water Quality Control Plant | Fluorene | 3/30/04 | ND | 0.12 | ug/l | 0.12 | 0.03 | | 87 | 3520C/8310 |
| 1126 | S.F. Airport, Water Quality Control Plant | Fluorene | 8/24/04 | ND | 0.03 | ug/l | 0.12 | 0.03 | | 87 | 3520C/8310 |
| 1127 | S.F. Airport, Water Quality Control Plant | Fluorene | 3/22/05 | ND | 0.03 | ug/l | 0.12 | 0.03 | | 87 | 3520C/8310 |
| 1128 | S.F. Airport, Water Quality Control Plant | Fluorene | 9/19/05 | ND | 0.028 | ug/l | 0.1 | 0.028 | | 87 | 3520C/8310 |
| 1129 | S.F. Airport, Water Quality Control Plant | Fluorene | 3/13/06 | ND | 0.028 | ug/l | 0.1 | 0.028 | | 87 | 3520C/8310 |
| 1162 | S.F. Airport, Water Quality Control Plant | Indeno(1,2,3-cd)Pyrene | 9/27/02 | ND | 5.1 | ug/l | 9.5 | 5.1 | | 92 | 3520C/8310 |
| 1163 | S.F. Airport, Water Quality Control Plant | Indeno(1,2,3-cd)Pyrene | 2/28/03 | ND | 5.1 | ug/l | 9.4 | 5.1 | | 92 | 3520C/8310 |
| 1164 | S.F. Airport, Water Quality Control Plant | Indeno(1,2,3-cd)Pyrene | 7/25/03 | ND | 5 | ug/l | 5 | 1.9 | | 92 | 3520C/8310 |
| 1165 | S.F. Airport, Water Quality Control Plant | Indeno(1,2,3-cd)Pyrene | 3/30/04 | ND | 0.11 | ug/l | 0.11 | 0.08 | | 92 | 3520C/8310 |
| 1166 | S.F. Airport, Water Quality Control Plant | Indeno(1,2,3-cd)Pyrene | 8/24/04 | ND | 0.03 | ug/l | 0.11 | 0.03 | | 92 | 3520C/8310 |
| 1167 | S.F. Airport, Water Quality Control Plant | Indeno(1,2,3-cd)Pyrene | 3/22/05 | ND | 0.03 | ug/l | 0.11 | 0.03 | | 92 | 3520C/8310 |
| 1168 | S.F. Airport, Water Quality Control Plant | Indeno(1,2,3-cd)Pyrene | 9/19/05 | ND | 0.021 | ug/l | 0.1 | 0.021 | | 92 | 3520C/8310 |
| 1169 | S.F. Airport, Water Quality Control Plant | Indeno(1,2,3-cd)Pyrene | 3/13/06 | ND | 0.021 | ug/l | 0.1 | 0.021 | | 92 | 3520C/8310 |
| 1178 | S.F. Airport, Water Quality Control Plant | Naphthalene | 9/27/02 | ND | 3.4 | ug/l | 4.8 | 3.4 | | 94 | 8270C |
| 1179 | S.F. Airport, Water Quality Control Plant | Naphthalene | 2/28/03 | ND | 3.3 | ug/l | 4.7 | 3.3 | | 94 | 8270C |
| 1180 | S.F. Airport, Water Quality Control Plant | Naphthalene | 7/25/03 | ND | 3.6 | ug/l | 5 | 3.6 | | 94 | 8270C |
| 1181 | S.F. Airport, Water Quality Control Plant | Naphthalene | 3/30/04 | ND | 1.04 | ug/l | 1.04 | 1.04 | | 94 | 8270C |
| 1182 | S.F. Airport, Water Quality Control Plant | Naphthalene | 8/24/04 | ND | 0.93 | ug/l | 1 | 0.93 | | 94 | 8270C |
| 1183 | S.F. Airport, Water Quality Control Plant | Naphthalene | 3/22/05 | ND | 0.93 | ug/l | 1 | 0.93 | | 94 | 8270C |
| 1184 | S.F. Airport, Water Quality Control Plant | Naphthalene | 9/19/05 | ND | 0.82 | ug/l | 4.8 | 0.82 | | 94 | 8270C |
| 1185 | S.F. Airport, Water Quality Control Plant | Naphthalene | 3/13/06 | ND | 0.81 | ug/l | 4.7 | 0.81 | | 94 | 8270C |
| 1218 | S.F. Airport, Water Quality Control Plant | Phenanthrene | 9/27/02 | ND | 2.3 | ug/l | 4.8 | 2.3 | | 99 | 8270C |
| 1219 | S.F. Airport, Water Quality Control Plant | Phenanthrene | 2/28/03 | ND | 2.3 | ug/l | 4.7 | 2.3 | | 99 | 8270C |
| 1220 | S.F. Airport, Water Quality Control Plant | Phenanthrene | 7/25/03 | ND | 2.5 | ug/l | 5 | 2.5 | | 99 | 8270C |
| 1221 | S.F. Airport, Water Quality Control Plant | Phenanthrene | 3/30/04 | ND | 0.93 | ug/l | 0.93 | 0.93 | | 99 | 8270C |
| 1222 | S.F. Airport, Water Quality Control Plant | Phenanthrene | 8/24/04 | ND | 0.41 | ug/l | 1 | 0.41 | | 99 | 8270C |
| 1223 | S.F. Airport, Water Quality Control Plant | Phenanthrene | 3/22/05 | ND | 0.41 | ug/l | 1 | 0.41 | | 99 | 8270C |
| 1224 | S.F. Airport, Water Quality Control Plant | Phenanthrene | 9/19/05 | ND | 0.56 | ug/l | 4.8 | 0.56 | | 99 | 8270C |
| 1225 | S.F. Airport, Water Quality Control Plant | Phenanthrene | 3/13/06 | ND | 0.55 | ug/l | 4.7 | 0.55 | | 99 | 8270C |
| 1226 | S.F. Airport, Water Quality Control Plant | Pyrene | 9/27/02 | ND | 1.3 | ug/l | 4.8 | 1.3 | | 100 | 3520C/8310 |
| 1227 | S.F. Airport, Water Quality Control Plant | Pyrene | 2/28/03 | ND | 1.3 | ug/l | 4.7 | 1.3 | | 100 | 3520C/8310 |
| 1228 | S.F. Airport, Water Quality Control Plant | Pyrene | 7/25/03 | ND | 5 | ug/l | 5 | 1.4 | | 100 | 3520C/8310 |
| 1229 | S.F. Airport, Water Quality Control Plant | Pyrene | 3/30/04 | ND | 0.21 | ug/l | 0.21 | 0.06 | | 100 | 3520C/8310 |
| 1230 | S.F. Airport, Water Quality Control Plant | Pyrene | 8/24/04 | ND | 0.06 | ug/l | 0.21 | 0.06 | | 100 | 3520C/8310 |
| 1231 | S.F. Airport, Water Quality Control Plant | Pyrene | 3/22/05 | ND | 0.06 | ug/l | 0.21 | 0.06 | | 100 | 3520C/8310 |
| 1232 | S.F. Airport, Water Quality Control Plant | Pyrene | 9/19/05 | ND | 0.025 | ug/l | 0.1 | 0.025 | | 100 | 3520C/8310 |
| 1233 | S.F. Airport, Water Quality Control Plant | Pyrene | 3/13/06 | ND | 0.025 | ug/l | 0.1 | 0.025 | | 100 | 3520C/8310 |

# Table 7

San Francisco International Airport

**MEL LEONG TREATMENT PLANT**

## Ammonia-Nitrogen Levels

(Monthly Average Values)

| Month | Sanitary | | Industrial | |
|---|---|---|---|---|
| | ***M.E.C.*** *= 118 mg/L* | | ***M.E.C.*** *= 6.9 mg/L* | |
| | **Influent** | **Effluent** | **Influent** | **Effluent** |
| May-05 | 92 | 72.8 | 0.6 | 0.2 |
| Jun-05 | 98 | 53.6 | 1.2 | 0.2 |
| Jul-05 | 99 | 33.9 | 3.8 | 0.2 |
| Aug-05 | 98 | 37.6 | 0.8 | 0.3 |
| Sep-05 | 92 | 29.4 | 0.9 | 0.3 |
| Oct-05 | 93 | 51.2 | 1.7 | 0.3 |
| Nov-05 | 92 | 46.0 | 1.0 | 0.1 |
| Dec-05 | 83 | 38.4 | 2.4 | 0.4 |
| Jan-06 | 89 | 47.1 | 0.8 | 0.5 |
| Feb-06 | 85 | 48.1 | 0.3 | 0.1 |
| Mar-06 | 82 | 77.1 | 0.8 | 0.3 |
| Apr-06 | 93 | 85.6 | 2.3 | 1.0 |
| May-06 | 81 | 73.7 | 6.5 | 1.4 |
| Jun-06 | 86 | 56.9 | 1.5 | 0.8 |
| Jul-06 | 86 | 42.1 | 1.5 | 3.0 |
| Aug-06 | 92 | 55.5 | 7.9 | 5.6 |
| Sep-06 | 99 | 60.0 | 2.1 | 0.5 |
| Oct-06 | 98 | 98.0 | 1.4 | 0.4 |
| Nov-06 | 95 | 67.8 | 0.7 | 0.4 |
| Dec-06 | 87 | 74.5 | 0.3 | 0.4 |
| Jan-07 | 97 | 91.4 | 2.6 | 0.7 |
| Feb-07 | 92 | 93.1 | 1.0 | 0.6 |
| Mar-07 | 100 | 96.9 | 0.9 | 1.8 |
| Apr-07 | 103 | 91.1 | 1.0 | 0.9 |
| **2-year Average value** | **92.2** | **63.4** | **1.8** | **0.9** |

All values are in **mg/L**

## ATTACHMENT G – REGIONAL WATER BOARD ATTACHMENTS

The following documents are part of this Order but are not physically attached due to volume. They are available on the Internet at:
http://www.waterboards.ca.gov/sanfranciscobay/Download.htm

- Self-Monitoring Program, Part A (August 1993).
- Standard Provisions and Reporting Requirements, August 1993.
- Regional Water Board Resolution No. 74-10.
- August 6, 2001 Regional Water Board staff letter, "Requirement for Monitoring of Pollutants in Effluent and Receiving Water to Implement New Statewide Regulations and Policy".