TREASURE ISLAND WWTP

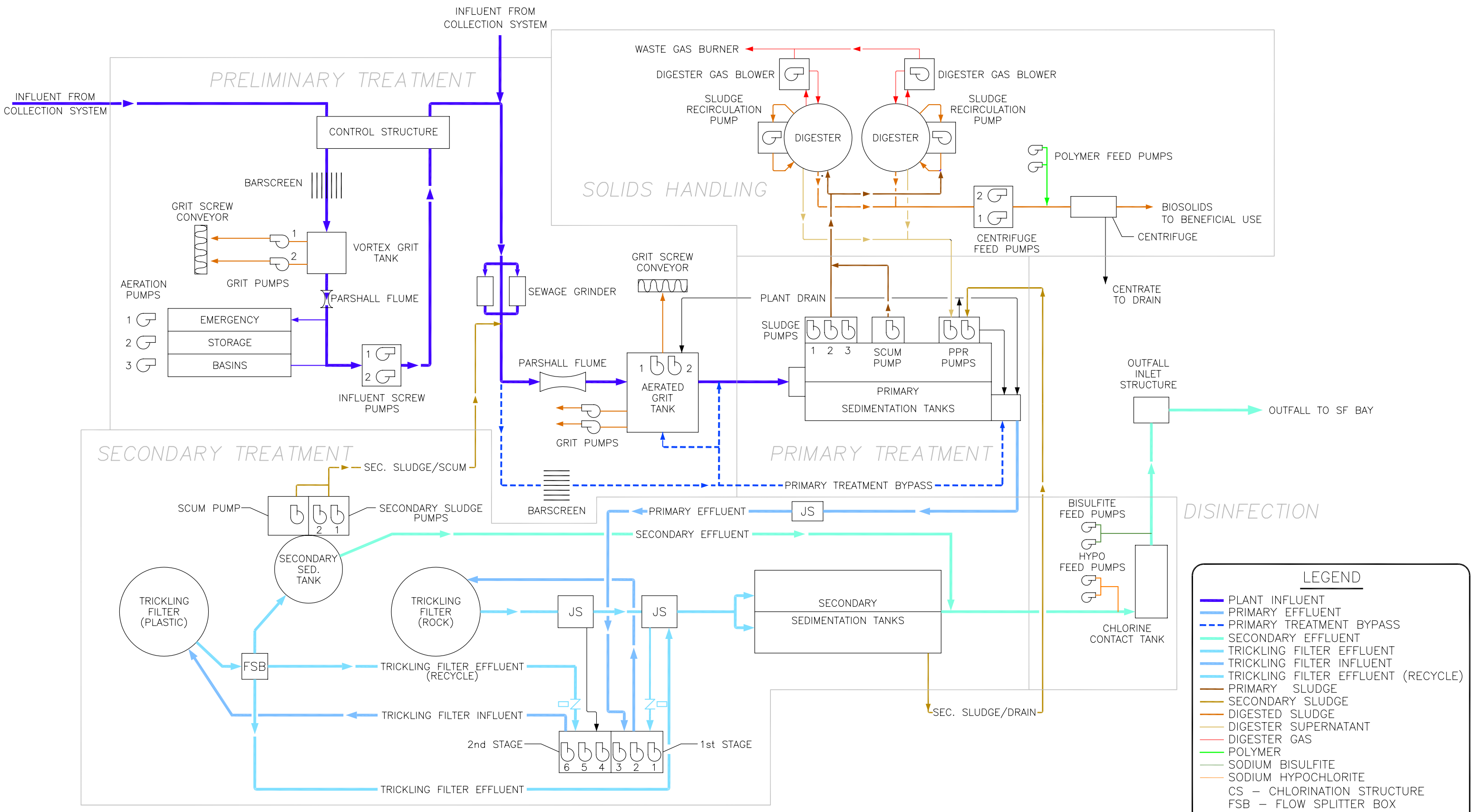

FlowDiagram.Dwg
QREP 3-13-97
MODIF. BY SJ 02/04