CALIFORNIA REGIONAL WATER QUALITY CONTROL BOARD
SAN FRANCISCO BAY REGION

ORDER NO. 95-078
NPDES NO. CA0005240

WASTE DISCHARGE REQUIREMENTS FOR:

CALIFORNIA AND HAWAIIAN SUGAR COMPANY, INC.
AND
CROCKETT-VALONA SANITARY DISTRICT
CROCKETT, CONTRA COSTA COUNTY

The California Regional Water Quality Control Board, San Francisco Bay Region (hereinafter called the Board), finds that:

1. California and Hawaiian Sugar Company, Inc. (hereinafter called C&H), and the Crockett-Valona Sanitary District (hereinafter called the District), by application (Report of Waste Discharge) dated January 3, 1994, and subsequent amendments from C&H dated January 25, 1994, and March 22, 1995, have applied for reissuance of National Pollutant Discharge Elimination System (NPDES) permit No. CA0005240.

**FACILITY DESCRIPTION**

2. C&H owns and operates a cane sugar refinery in Crockett. Refinery process wastewaters are combined with domestic sewage collected by the District from the community of Crockett and treated in the Joint C&H-CVSD Biological Wastewater Treatment Plant (hereinafter Joint Treatment Plant). The Joint Treatment Plant is owned by C&H, and is jointly operated by C&H under the terms of a November 8, 1976, Joint-Use Agreement between C&H and the District (hereinafter the Dischargers). The Joint Treatment Plant has a design capacity of 1.78 millions gallons per day (MGD).

3. The District is responsible for collecting and handling sewage within its sewer system. Sewage is comminuted and degritted before the District pumps it to the Joint Treatment Plant. All the grit thus removed is hauled to a permitted Class III disposal site. The NPDES permit application reports the District's average dry weather flow to the Joint Treatment Plant is 0.3 MGD, with a peak wet weather flow of 2.0 MGD.

4. C&H is responsible for operation of the Joint Treatment Plant and outfall, and all other waste discharges at its sugar refinery. C&H treats the refinery process wastewaters using a clarifier for solids removal before pumping the wastewater to the Joint Treatment Plant. The average flow of refinery process wastewater to the Joint Treatment Plant is 0.5 MGD. Solids are currently disposed of to a landfill owned and operated by C&H and is regulated by Waste Discharge Requirements Order No. 93-023.

## PURPOSE OF ORDER

5. This NPDES Permit regulates the discharge of effluent from the Joint Treatment Plant, and C&H's discharge of cooling water, boiler house wastewaters, and all storm water associated with industrial activity from the C&H sugar refinery and Joint Treatment Plant to Carquinez Strait, a water of the United States. These discharges are currently governed by Waste Discharge Requirements (NPDES Permit) specified in the Board's Order No. 89-121, and by Waste Discharge Requirements for Discharges of Storm Water Associated with Industrial Activities, State Water Resources Control Board Order No. 91-13-DWQ (as amended by Order No. 92-12-DWQ, NPDES General Permit No. CAS0000001). The conditions of Order No. 89-121 were continued in effect past its expirtation date, in accordance with NPDES regulation 40 CFR 122.6(d), by letter of the Executive Officer dated July 19, 1994. The USEPA and the Board have classified the discharges by C&H and the District as a major discharge.

## DISCHARGE DESCRIPTION

6. The discharges are described below and are based on information contained in the Report of Waste Discharge, recent self-monitoring reports, and other relevant information. Figure 1 of this Order shows the discharge locations, Figure 2 shows the cooling water flow diagram, Figure 3 is the process wastewater flow diagram, and Figure 4 is the flow diagram for the Joint Treatment Plant.

   a. **Waste 001** consists of an average of 14 MGD of once through barometric condenser cooling waters, condensed vapors from vacuum pans, cooling waters for evaporators and steam turbine heat exchangers, boiler blowdown, and storm water from roof drains. Waste 001 is discharged through a deep water diffuser that extends to approximately 200 feet offshore at a depth of 47 feet (Lat. 38°03'27", Long. 122°13'06"). The general quality of this discharge based on the past 3 years of data is as follows:

| | Average | Maximum | Minimum |
|---|---|---|---|
| Biological Oxygen Demand, mg/l | 2 | 19 | 1 |
| pH (standard units) | 7.9 | 8.3 | 7.2 |
| Temperature, C | 26 | 34 | 15 |

   b. **Waste 002** consists of 0.8 MGD of treated wastewater from the Joint Treatment Plant. Wastewaters to the treatment plant include process wastes from the C&H sugar refinery, domestic sewage from the District, and storm water inflows and infiltration. Waste from the refinery include waste sugar solutions, bone char washings, waste filter aid slurries, refinery equipment washdowns, rail car washings, boiler water treatment wastewaters (silica removal), and clarifier insolubles and scums. Treatment consists of a jet aerated surge basin, three activated sludge units in parallel aerated by fine bubble diffusers, two clarifiers, and a chlorine contact chamber. The treated effluent is discharged through a deepwater diffuser 637 feet from shore and 47 feet deep (Lat. 38°03'30", Long. 122°13'28") directly below the Carquinez Bridge. The general quality of this discharge based on the past 3 years of discharge is as follows:

| | Average | Maximum | Minimum |
|---|---|---|---|
| Biological Oxygen Demand, mg/l | 7 | 80 | 0 |
| Total Suspended Solids, mg/l | 30 | 212 | 0 |
| Ammonia as N, mg/l | -- | -- | <1 |
| Coliform, MPN/100ml | 8 | 348 | 2 |

c. **Waste 003** consists of 0.02 MGD of boiler house wastewaters including brine and rinse waters from zeolite softeners, fan cooling waters, sampler wastewaters, and pump gland sealing waters. Some of Waste 001 may be diverted through a valved connection for discharge with Waste 003 for pH adjustment of Waste 003 provided compliance with the temperature requirement for Waste 003 is maintained. This waste discharge is to a shallow discharge point into Carquinez Strait (Lat. 38°03'27", Long. 122°13'03"). When construction of the Crockett Cogeneration Plant is completed and the plant is online sometime in 1996, the steam from C&H's boilers will be replaced with steam from the cogeneration plant. As a result, the discharge of Waste 003 will be significantly reduces and may be completely eliminated if the remaining sample lines can be redirected. The general quality of Waste 003 based on the past 3 years of data is as follows:

| | Average | Maximum | Minimum |
|---|---|---|---|
| Biological Oxygen Demand, mg/l | 3 | 34 | 0 |
| Total Suspended Solids, mg/l | 20 | 177 | 2 |
| pH, standard units | 7.9 | 8.5 | 6.9 |
| Temperature, C | 28 | 36 | 16 |

d. **Waste 004** consists of storm water runoff from an area of approximately 30,600 square feet located at the eastern portion of the refinery. Activities in this area include railcar loading and product storage and transfer operations. Waste 004 is discharged to a shallow discharge point into Carquinez Strait (Lat. 38°03'25", Long. 122°13'08").

e. **Waste 005** consists of storm water runoff from an area of approximately 63,700 square feet located centrally in the refinery yard. The runoff is from areas adjacent to and surrounding the metal shop, and product storage and transfer operations. Drainage from small portions within this area are isolated and sent to the Joint Treatment Plant. Waste 005 combines with street runoff from Crockett and is discharged to a shallow discharge point into Carquinez Strait (Lat. 38°03'27", Long. 122°13'11").

f. **Waste 008** consists of storm water runoff from an area of approximately 13,000 square feet on the western portion of the refinery yard. The activities in this area are generally the same as those for Waste 005, and include activities around the Herreshoff Kiln and a steam cleaning rack. The drainage directly under the Herreshoff Kiln and the cleaning rack are discharged to the Joint Treatment Plant. Waste 008 is discharged to a shallow discharge point into Carquinez Strait (Lat. 38°03'27", Long. 122°13'11").

g. **Waste 009** consists of storm water runoff from the discharger's raw sugar loading dock. The discharge is through the outlet of an oil water separator at the east end of the dock into Carquinez Strait (Lat. 38°03'22", Long. 122°12'46").

h. **Waste 011** consists of storm water runoff from an area of approximately 4,400 square feet north of the Herreshoff Kiln. The discharge is to a shallow discharge point into Carquinez Strait (Lat. 38°03'27", Long. 122°13'11").

i. **Waste 012** consists of storm water runoff from the drains located under the canopied product and material storage area in the refinery yard. The storm water is runoff from areas outside of the canopied area near the Herreshoff Kiln. The discharge is to a shallow discharge point into Carquinez Strait (Lat. 38°03'27", Long. 122°13'11").

j. **Waste 013** consists of storm water runoff from an area at the western side of the refinery south of Warehouse No. 1. Activities include non-hazardous waste storage and handling, and truck traffic associated with warehouse operations. The discharge is to a shallow discharge point into Carquinez Strait (Lat. 38°03'27", Long. 122°13'15").

k. **Waste 014** consists of storm water runoff from the area adjacent to C&H's primary wastewater treatment plant and hazardous waste storage area. The discharge is to Carquinez Strait via a concrete flood control channel (Lat. 38°03'22", Long. 122°13'15").

l. **Waste 016** consists of storm water runoff from a small area along the western side of the Joint Treatment Plant. This area is adjacent to the west side of the activated sludge units and around the air blowers. The discharge combines with runoff from surrounding areas (including a parking lot and public road), and is discharged to Carquinez Strait via the Crockett storm drain system (Lat. 38°03'19", Long. 122°13'36").

## APPLICABLE PLANS, POLICIES AND REGULATIONS

7. The Board adopted a revised Water Quality Control Plan for the San Francisco Bay Basin (Basin Plan) on December 17, 1986, and the State Water Resources Control Board (State Board) approved it on May 21, 1987. The Basin Plan identifies beneficial uses and water quality objectives for surface and ground waters in the region, as well as discharge prohibitions and certain effluent limitations intended to protect beneficial uses.

8. The State Board adopted the Water Quality Control Plan for Control of Temperature in the Coastal and Interstate Waters and Enclosed Bays and Esturaries of California (hereinafter referred to as the Thermal Plan) on September 18, 1975. The discharge of Wastes 001 and 003 are subject to the requirements of the Thermal Plan except for requirements 5.A(1)a and 5.A(2). C&H is exempt from these requirements based upon State Board Resolution No. 75-72 issued July 17, 1975, and the USEPA's concurrence by letter of September 2, 1975.

9. Effluent limitation guidelines requiring the application of best practicable technology currently available for the Crystalline Cane Sugar Refining Subcategory (40 CFR 409.20) have been promulgated by the USEPA and is applicable to the discharge of Waste 002. The Biological Oxygen Demand and Total Suspended Solids Effluent Limits are set according to these guidelines proportional to the 3,600 tons per day of raw sugar melt processed by C&H as reported in the NPDES Permit application supplement dated March 22, 1995.

10. Effluent limitations and toxic effluent standards established pursuant to Sections 208(b), 301, 304, and 307 of the Federal Water Pollution Control Act and amendments thereto are applicable to the discharge.

## BENEFICIAL USES

11. The beneficial uses of Carquinez Strait and contiguous waters are:
    a. Water contact and non-contact recreation
    b. Navigation
    c. Commercial and sport fishing
    d. Wildlife habitat
    e. Estuarine habitat
    f. Preservation of rare and endangered species
    g. Fish spawning and migration
    h. Industrial service and process supply

## BASIS FOR REQUIREMENTS

12. Effluent and receiving water limitations in this Order are based on the plans, policies, and water quality objectives and criteria of the Basin Plan, the Thermal Plan, *Quality Criteria for Water* (EPA/5-86-001, 1986; Gold Book), applicable Federal Regulations (40 CFR Parts 122 through 131), the National Toxics Rule (57 FR 60848, 22 December 1992; NTR), and best professional judgement.

13. The establishment of many of the chemical specific limitations depend upon the salinity characteristics of the receiving waters. Data contained in the 1993 Annual Report for San Francisco Estuary Regional Monitoirng Program, and data from the Department of Water Resources (for the years 1993, 1992, 1986, 1985 and 1984) show that the salinity of the receiving water is above 5 parts per thousand greater than ninety-five percent of the time. Based on these data, the salinity in the vicinity of the discharges is brackish and marine in character.

14. The effluent limit for copper included in this permit is based on 4.9 µg/l copper as an interpretation of the narrative toxicity objective in the Basin Plan, based on best professional judgement. From a technical standpoint, 4.9 µg/l is currently the best available criterion that is protective of the most sensitive designated use of San Fancisco Bay marine waters with respect to copper: habitat for aquatic organisms. The criterion is based on the Regional Board's study to develop a site-specific objective for copper, which employed the "water effect ratio" approach developed by the USEPA. This approach provides a measure of the binding capacity of natural waters (dependent on particulate matter) relative to the binding capacity of reference waters (filtered oceanic water). The study and associated staff analysis are described in a September 25, 1992, Board staff report entitled "Revised Report on Proposed Amendment to Establish a Site Specific Objective for Copper for San Francisco Bay."

### Storm Water

15. The USEPA promulgated regulations for storm water discharges from areas associated with industrial activities on November 19, 1990. These regulations (40CFR Parts 122, 123, and 124) require specific categories of industrial activity to obtain a NPDES permit and to implement Best Available Technology Economically Available (BAT) and Best Conventional Pollutant Control Technology (BCT) to control pollutants in industrial storm water. Storm water runoff from around the Joint Treatment Plant and from refinery areas owned and operated by C&H are subject to these

requirements. These discharges are described in Finding 6 above. Storm water discharge from points 004 through 009 is permitted by Order No. 89-121. C&H filed a Notice of Intent dated March 30, 1992, for coverage of discharges of Wastes 010 through 016, under Waste Discharge Requirements for Discharges of Storm Water Associated with Industrial Activities, State Water Resources Control Board Order No. 91-13-DWQ (as amended by Order No. 92-12-DWQ, NPDES General Permit No. CAS0000001). A provision in this Order provides for coverage under this Permit of any other storm water discharge point(s) at the facility which may be discovered subsequent to adoption of this Order.

16. Order No. 89-121 required C&H to install facilities by July 19, 1991, to divert wastewater flows from outfalls 004 through 009 to the Joint Treatment Plant "...if any washing, cleaning, steam cleaning or other activity contributing wastewater to these outfall systems occurs ... [and] during the first rainstorm of the winter and during the entire dry season..." Order No. 89-121 finds that "... some or all of some of these flows will be permanently diverted to the wastewater treatment plant." The compliance status with this requirement is described below.

    a. C&H has complied with the first part of the requirement by diverting all water from cleaning activities to the Joint Treatment Plant.

    b. Regarding the second part of the requirement to divert storm water to the treatment plant, C&H permanently diverted to treatment storm water runoff from select areas considered to have the most contaminated runoff. These areas are the area immediately beneath and adjacent to the Herreshoff Kiln, the truck scale and pump basin areas of the Rolph Avenue truck loading station, and the steam cleaning rack. By letter of June 24, 1991, C&H estimated that to completely divert the first rainstorm of each season would cost upwards of $700,000, and in subsequent submittals, proposed to implement storm water pollution prevention measures as an alternative means of complying with the requirement. C&H described these measures in their Storm Water Pollution Prevention Plan (SWPPP) dated August 26, 1992. These measures include routine sweeping of the refinery yard, and controlled wash down of the raw sugar loading dock after each each ship and sending the collected washwaters to the treatment plant.

    c. Monitoring data and data from the NPDES permit application of the storm water discharge points Wastes 005, 008, 009 and 014 for the past three winter seasons (92/93, 93/94, and 94/95) show the following:

| Parameter | Average | Range |
|---|---|---|
| pH (standard units) | 6.9 | 6.5 to 7.2 |
| TSS (mg/l) | 260 | 8 to 2480 |
| Specific Conductance (μmhos/cm) | 196 | 48 to 900 |
| Oil and Grease (mg/l) | 3.7 | 1 to 9 |
| Total Organic Carbon (mg/l) | 30 | 5 to 126 |
| $BOD_5$ (mg/l) | 30 | 1 to 144 |
| COD (mg/l) | 505 | 25 to 1340 |

d. The above average concentrations indicate that these discharges are not enough of a threat to water quality at this time to warrant the costs of diversion of the runoff for treatment. However, the occasional high BOD, COD, TOC and TSS readings indicate that additional controls need to be implemented. This Order will require C&H to update its SWPPP to increase the level of pollution prevention measures. This requirement supercedes the requirement of Order No. 89-121 to divert to treatment the first rainstorm of each winter season.

**Whole Effluent Toxicity**

17. The Basin Plan establishes a narrative objective for acute and chronic toxicity in the Bay. In part, it states that "all waters shall be maintained free of toxic substances in concentrations that are lethal to or that produce other detrimental responses in aquatic organisms. Detrimental responses include, but are not limited to, decreased growth rate and decreased reproductive success of resident or indicator species..."

18. Because of the nature of the Waste 002 and the nature and discharge location of Waste 003, these discharges pose a reasonable potential for causing exceedance of the acute toxicity objective. This Order specifies acute toxicity effluent limits for these two waste streams.

19. The Basin Plan initiated the Effluent Toxicity Characterization Program (ETCP) in 1986. The ETCP required certain dischargers to monitor their effluent using critical life stage toxicity tests for the purpose of generating information to allow development of chronic toxicity effluent limitations. C&H participated in the ETCP with testing of influent Carquinez Strait water, and Waste 001 using the red abalone, purple sea urchin, and marine diatom. The results of the tests do not show any contribution of chronic toxicity by C&H. Based on these data and considering the nature of Waste 001, this waste stream poses a low potential to cause chronic toxicity in receiving waters. Also, considering the nature and flow volume of Wastes 002 and 003, these waste streams pose a low potential to cause chronic toxicity in receiving waters. Therefore, chronic toxicity effluent limitations for this major discharge have not been included in this Order.

**Effluent Limits Deleted from Order No. 89-121**

20. Effluent limits for arsenic, cadmium, hexavalent chromium, silver, zinc, and cyanide in Waste 002 specified in Order No. 89-121 have been deleted from the effluent limits of this Order. The basis for this is that the discharge of these pollutants by C&H and the District do not pose a reasonable potential to cause, or contribute to an excursion above any numeric or narrative water quality objective. This is based on evaluation of ambient receiving water data and self-monitoring data. The receiving water data relied upon are contained in 1993 Annual Report for San Francisco Bay Estuary Regional Monitoring Program for Trace Substances, Trace Element Cycles in the S.F. Bay Estuary [Flegal et al., 1991], and Contaminant Levels in Fish Tissue From San Francisco Bay, *draft* 1994). The self-monitoring data considered was from the past five years (1990 to 1994), and Board staff compliance inspection data from the past three years (1992 to 1994). These data show that the discharge concentrations of these pollutants are not at levels of concern. Specifically, the discharge data show that these pollutants are mostly non-detectable at levels from one to two orders of magnitude below the limit. Less than twenty-five percent of the samples showed measurable

concentrations of these pollutants. Of these samples, the levels were at least one order of magnitude below the limit.

21. The effluent limit for Total Identifiable Chlorinated Hydrocarbons (TICH) in Waste 002 specified in Order No. 89-121 has been deleted from the effluent limits of this Order. TICH is defined as the sum of "DDT, DDD, DDE, aldrin, BHC, chlordane, endrin, heptachlor, lindane, dieldrin, polychorinated biphenyls, and other identifiable chlorinated hydrocarbons." The basis for this deletion is that the discharge of these pollutants by C&H and the District do not pose a reasonable potential to cause, or contribute to an excursion above any numeric or narrative water quality objective. This is based on data supplied by C&H on the use of pesticides and herbicides from 1985 through 1993 by Hawaiian cane growers. These data show no usage of the pesticides and herbicides listed under TICH for those years. Also, the original basis for the TICH limit is the Board's 1982 Basin Plan. The TICH limit has been eliminated in the 1986 Basin Plan. Furthermore, water quality based effluent limits have been retained for TICH compounds believed to be of concern in the Bay or are known to be present in the discharge. These include polychlorinated biphenyls, halomethanes and chloroform.

**OTHER FINDINGS**

22. Pursuant to 40 CFR 122.44, "Establishing Limitations, Standards, and Other Permit Conditions," NPDES permits should also include toxic pollutant limitations if the discharger uses or manufactures a toxic pollutant as an intermediate or final product or byproduct. This permit may be modified prior to the expiration date, pursuant to 40 CFR 122.62 and 124.5, to include effluent limitations for toxic constituents determined to be present in significant amounts in the discharge through the monitoring program included as a part of this Order.

23. The reissuance of waste discharge requirements for this discharge is exempt from the provisions of Chapter 3 (commencing with Section 21000 of Division 13) of the Public Resources Code (CEQA) pursuant to Section 13389 of the California Water Code.

24. The Board has notified the discharger and interested agencies and persons of its intent to reissue waste discharge requirements, and has provided them with an opportunity for a public hearing and an opportunity to submit their written views and recommendations.

25. The Board, in a public meeting, heard and considered all comments pertaining to the discharge.

**IT IS HEREBY ORDERED** that C&H and the District, in order to meet the provisions contained in Division 7 of the California Water Code and regulations adopted thereunder, and the provisions of the Clean Water Act and regulations and guidelines adopted thereunder, shall comply with the following:

## A. <u>DISCHARGE PROHIBITIONS</u>

1. The discharge of Waste 001and 002 at any point at which the wastewaters do not receive an initial dilution of at least 10:1 is prohibited, unless as otherwise authorized by a permit issued by the Board for purposes such as water reclamation.

2. The use of algeacides or anti-fouling additives in the cooling water system contributing to Waste 001 is prohibited.

3. The bypass or overflow of untreated or partially treated Waste 002 to waters of the State, either at the treatment plant or from the collection system or pump stations tributary to the treatment plant is prohibited.

4. Discharges of wastewaters, materials, or other wastes other than storm water which are not otherwise authorized by this Order, to a storm drain system or waters of the State are prohibited.

5. The handling, storage, treatment, or discharge of wastewaters or sludges by C&H and the District shall not cause a condition of pollution, contamination, or nuisance as defined in Section 13050 of the California Water Code.

## B. EFFLUENT LIMITATIONS

**Mass Emission Rates**

1. The discharge of effluent shall not exceed the following total mass emission rates for $BOD_5$ and Total Suspended Solids:

   a. Total mass emission rate of **$BOD_5$** contributed by **Wastes 001[i], 002, and 003** shall be determined by summing the calculated industrial effluent guideline limits for C&H with the calculated municipal limits for the District as follows:

| $BOD_5$ Limit | = | C&H | + | District |
|---|---|---|---|---|
| Monthly Average Limit (lb/day) | = | 3096 | + | (30 mg/l) x (District Flow in MGD) x (8.345) |
| Monthly Average Limit (kg/day) | = | 1548 | + | (30 mg/l) x (District Flow in MGD) x (3.785) |
| Daily Maximum Limit (lb/day) | = | 8568 | + | (60 mg/l) x (District Flow in MGD) x (8.345) |
| Daily Maximum Limit (kg/day) | = | 4284 | + | (60 mg/l) x (District Flow in MGD) x (3.785) |

   [*i*] $BOD_5$ for Waste 001 shall be the net increase above intake water $BOD_5$ loading.

   b. Total mass emission rate of **Total Suspended Solids** contributed by **Wastes 002 and 003** shall be determined by summing the calculated industrial effluent guideline limits for C&H with the calculated municipal limits for the District as follows:

| | | | | |
|---|---|---|---|---|
| Total Suspended Solids Limit | = | C&H | + | District |
| Monthly Average (lb/day) | = | 648 | + | (30 mg/l) x (District Flow in MGD) x (8.345) |
| Monthly Average Limit (kg/day) | = | 324 | + | (30 mg/l) x (District Flow in MGD) x (3.785) |
| Daily Maximum Limit (lb/day) | = | 1944 | + | (60 mg/l) x (District Flow in MGD) x (8.345) |
| Daily Maximum Limit (kg/day) | = | 972 | + | (60 mg/l) x (District Flow in MGD) x (3.785) |

**Conventional and Toxic Pollutants**

2. **Waste 001** as discharged shall not have a pH of less than 6.0 nor greater than 9.0.

3. The discharge of **Waste 002** outside the pH range or containing constituents in excess of the limits specified below is prohibited:

| Constituent/Parameter | Units | Limitations |
|---|---|---|
| pH | standard | 6.0 to 9.0 |
| Chlorine Residual | mg/l | 0.0 |
| Total Coliform Bacteria | MPN per 100 ml | 240 in a median of 5 consecutive samples, or 10,000 in any single sample. |

| | | Monthly Average | Daily Average |
|---|---|---|---|
| Copper | µg/l | -- | 37 |
| Lead | µg/l | -- | 53 |
| Mercury | µg/l | 0.21 | 1 |
| Nickel | µg/l | -- | 65 |
| Oil and Grease | mg/l | 10 | 20 |
| Settleable Matter | ml/l-hr | 10 | 20 |
| Total Phenols | µg/l | -- | 500 |
| Chloroform | mg/l | 4.8 | -- |
| Halomethanes[a] | mg/l | 4.8 | -- |
| PAH[b] | µg/l | 0.31[d] | 150 |
| PCBs, total[c] | µg/l | 0.0007[d] | 0.3 |

[a] HALOMETHANES shall mean the sum of bromoform, bromomethane (methyl bromide), chloromethane (methyl chloride), chlorodibromomethane, and dichlorobromomethane.

[b] PAHs (polynuclear aromatic hydrocarbons) shall mean the sum of acenaphthylene, anthracene, 1,2-benzanthracene, 3,4-benzofluoranthene, benzo[k]fluoranthene, 1,12-benzoperylene, benzo[a]pyrene, chrysene, dibenzo[ah]anthracene, fluorene, indeno[1,2,3-cd]pyrene, phenanthrene, and pyrene.

[c] PCBs (polychlorinated biphenyls) shall mean the sum of chlorinated biphenyls whose analytical characteristics resemble those of Aroclor-1016, Aroclor-1221, Aroclor-1232, Aroclor-1242, Aroclor-1248, Aroclor-1254, and Aroclor-1260.

[d] Currently, the analytical reporting limits available from commercial laboratories are not low enough to determine compliance with the monthly average limits for PAHs and PCBs. Compliance with these limits shall be determined at 10 µg/l for PAHs, and at 2.0 µg/l for PCBs. Because analytical reporting limits may be improved, the Executive Officer may change these compliance limits prior to the expiration date of this permit.

4. The discharge of **Waste 003** outside the pH range or containing constituents in excess of the following limits is prohibited:

| Constituent | Units | Limitation |
|---|---|---|
| pH | standard | 6.5 to 8.5 |
| Oil and Grease | mg/l | Monthly average: 10<br>and Daily Maximum: 20 |

5. The discharge of storm water runoff **Wastes 004 through and including 016** outside the pH range or containing constituents in excess of the following limits is prohibited:

| Constituent | Units | Daily Maximum |
|---|---|---|
| pH | standard | 6.5 to 8.5 |
| visible oil | - | none observed |
| visible color | - | none observed |

**Whole Effluent Toxicity**

6. **Wastes 002** as discharged shall meet the following **acute toxicity limitation**:

The survival of test fishes[a] in 96-hour flow through bioassays shall be an eleven (11) sample median value[b] of not less than 90 percent survival, and a ninety percentile value[c] of not less than 70 percent survival.

[a] Test fish species as specified by the Executive Officer in the Self-Monitoring Program.

[b] A bioassay test showing survival of less than 90 percent represents a violation of this effluent limit, if five or more of the past ten or less bioassay tests show less than 90 percent survival.

[c] A bioassay test showing survival of less than 70 percent represents a violation of this effluent limit, if one or more of the past ten or less bioassay tests show less than 70 percent survival.

7. **Wastes 003** as discharged shall meet the following **acute toxicity limitation**:

The survival of test fishes[a] in a 96-hour static renewal bioassay shall be a three (3) sample median value[b] of not less than 90 percent survival, and a single sample value of not less than 70 percent survival.

[a] Test fish species as specified by the Executive Officer in the Self-Monitoring Program.

[b] A bioassay test showing survival of less than 90 percent represents a violation of this effluent limit, if one or more of the past two or less bioassay tests show less than 90 percent survival.

## C. RECEIVING WATER LIMITATIONS

1. **Waste 001 and Waste 003**, either individually or combined with other discharges, shall not create a zone, defined by water temperatures of more than 1 degree Fahrenheit above natural receiving water temperature, which exceeds 25 percent of the cross-sectional area of Carquinez Strait at any point.

2. Neither **Waste 001** nor **Waste 003** as discharged shall cause a surface water temperature rise greater than 4 degrees Fahrenheit above the natural temperature of the receiving waters at any time or place.

3. The discharge of wastes shall not cause the following conditions to exist in waters of the State at any place at levels that cause nuisance or adversely affect beneficial uses:

   a. Floating, suspended, or deposited macroscopic particulate matter or foam;

   b. Bottom deposits or aquatic growths;

   c. Alteration of temperature, turbidity, or apparent color beyond present natural background levels;

   d. Visible, floating, suspended, or deposited oil or other products of petroleum origin;

e. Toxic or deleterious substances to be present in concentrations or quantities which will cause deleterious effects on aquatic biota, wildlife, or waterfowl, or which render any of these unfit for human consumption either at levels created in the receiving waters or as a result of biological concentration.

4. The discharge of waste shall not cause the following limits to be exceeded in waters of the State in any place within one foot of the water surface:

| | | |
|---|---|---|
| a. | Dissolved oxygen: | 7.0 mg/l minimum. Annual median of 80% of saturation. When natural factors cause lesser concentrations than those specified above, then the discharge shall not cause further reduction in the concentration of dissolved oxygen. |
| b. | Dissolved sulfide: | 0.1 mg/l Maximum. |
| c. | pH: | Variation from natural ambient pH by more than 0.5 units. |
| d. | Un-ionized ammonia (as N) | 0.16 mg/l Maximum<br>0.025 mg/l Annual Median |

5. The discharges shall not cause a violation of any applicable water quality standard for receiving waters adopted by the Board or the State Board as required by the Federal Water Pollution Control Act and regulations adopted thereunder. If more stringent applicable water quality standards are promulgated or approved pursuant to Section 303 or the Federal Water Pollution Control Act or amendments thereto, the Board will revise and modify this Order in accordance with such more stringent standards.

## D. SLUDGE MANAGEMENT PRACTICES

1. Permanent sludge disposal activites are not authorized by this NPDES Permit.

2. The treatment, disposal, storage, or processing of sludge shall not cause waste material to be in any position where it is or can be, carried from the sludge treatment, disposal, storage, or processing site and deposited in waters of the State.

3. The sludge treatment, storage and handling site shall have facilities adequate to divert surface runoff from adjacent areas, to protect boundaries of the site from erosion, and to prevent any conditions that would cause drainage from the materials in the temporary storage site. Adequate protection is defined as protection from at least 100-year storm and protection from the highest possible tidal stage that may occur.

## E. PROVISIONS

1. **Storm Water Pollution Prevention Plan**: C&H shall update and submit a Storm Water Pollution Prevention Plan (SWPPP) acceptable to the Executive Officer by **August 1, 1995**. The SWPPP shall comply with the requirements contained in the attached Standard Provisions. Specifically, the SWPPP shall be updated to address all areas contributing storm

water discharge from facilities owned and operated by C&H as described in the findings of this Order. It shall include pollution prevention measures which are above and beyond the current practices of C&H in order to further reduce and control sources of TOC and TSS. These measures may first include a study to determine sources of contaminants, followed by increased frequency of sweeping, cleaning and/or erosion control measures for certain areas. The updated SWPPP shall be implemented by October 1, 1995.

Henceforth, C&H shall evaluate and update annually the SWPPP, or sooner if there is a change in the operation of the facility which may substantially affect the quality of the storm water discharged from the facility. The annual update shall be timed with the preparation and submittal of the annual storm water report required in the Self-Monitoring Program.

2. **Other Storm Water Discharge Point(s)**: If there are any other storm water discharges associated with industrial activities discovered during the course of storm water monitoring, SWPPP implementation, or other activities, C&H shall provide written notification to the Executive Officer within 30 calendar days of the discovery. The written notification shall include a map showing the location of the discharge point(s) with latitude and longitude, the size of the area which drains to the point, the types of activities in the area, and a proposed monitoring program for this discharge. This discharge(s) shall comply with the discharge limits for storm water discharges specified in B.5 of this Order and the monitoring requirements specified by the Executive Officer.

3. **Sewage Wastewater Pumping Station and Collection System Reliability:** By January 31, 1996, and on January 31 of each year thereafter, the District shall submit a technical report summarizing progress made towards development and implementation of the District's pumping station and collection system reliability improvement and management plan. The purpose of this plan is to minimize or eliminate sewage wastewater spills from pumping stations and collection systems. The District's plan should be based on Board staffs' recommendations contained in documents titled *Wastewater Pumping Stations Reliability Recommendations* and *Pumping and Collection System Reliability Improvement and Management Plan Recommendations*.

4. **Self-Monitoring Program**: C&H and the District shall conduct monitoring in accordance with the attached Self-Monitoring Program as adopted by the Board. The Self-Monitoring Program may be amended by the Executive Officer pursuant to 40 CFR 122.62, 122.63, and 124.5.

5. Pursuant to USEPA regulations 40 CFR 122.44, 122.62, and 124.5, this permit may be modified prior to the expiration date to include effluent limitations for toxic constituents determined to be present in significant amounts in the discharge through the monitoring program included as part of this Order.

6. All applications, reports, or information submitted to the Board shall be signed and certified pursuant to USEPA regulations 40 CFR 122.41(k).

7. Pursuant to USEPA regulations, 40 CFR 122.41(a), C&H and the District shall notify the Board as soon as it knows or has reason to believe 1) that they have begun or expect to begin,

use or manufacture of a toxic pollutant not reported in the permit application, or 2) a discharge of a toxic pollutant not limited by this permit has occurred, or will occur, in concentrations that exceed the specified limits in 40 CFR 122.42(a).

8. This Order includes all items of the attached "Standard Provisions, and Reporting Requirements" dated August 1993. In part, these Standard Provisions require submittal, within 90 days of adoption of this Order, of reports on Safeguards to Electric Power Failure, and Spill Prevention and Contingency Plan.

9. This Order supersedes the requirements of Order No. 89-121. Order No. 89-121 is hereby rescinded.

10. **Permit Expiration**: This Order expires on **April 19, 2000**. C&H and the District must file a Report of Waste Discharge in accordance with Title 23 of the California Code of Regulations, not later than 180 days in advance of such date as application for issuance of new waste discharge requirements.

11. This Order shall serve as National Pollutant Discharge Elimination System permits pursuant to Section 402 of the Federal Water Pollution Control Act, or amendments thereto, and shall become effective on the date of adoption provided the Regional Administrator, Environmental Protection Agency, has no objection. If the Regional Administrator objects to its issuance, the permit shall not become effective until such objection is withdrawn.

12. C&H and the District shall comply with all sections of this Order immediately upon adoption.

I, Steven R. Ritchie, Executive Officer do hereby certify the foregoing is a full, true and correct copy of an Order adopted by the California Regional Water Quality Control Board, San Francisco Bay Region on April 19, 1995.

STEVEN R. RITCHIE
Executive Officer

Attachments:

Figure 1 - Discharge Locations
Figure 2 - C&H Cooling Water Flow Diagram
Figure 3 - Process Wastewater Flow Diagram
Figure 4 - Process Wastewater Flow Diagram for Joint Treatment Plant
Standard Provisions & Reporting Requirements, August 1993
Self-Monitoring Program - Part A (8/93), and Part B

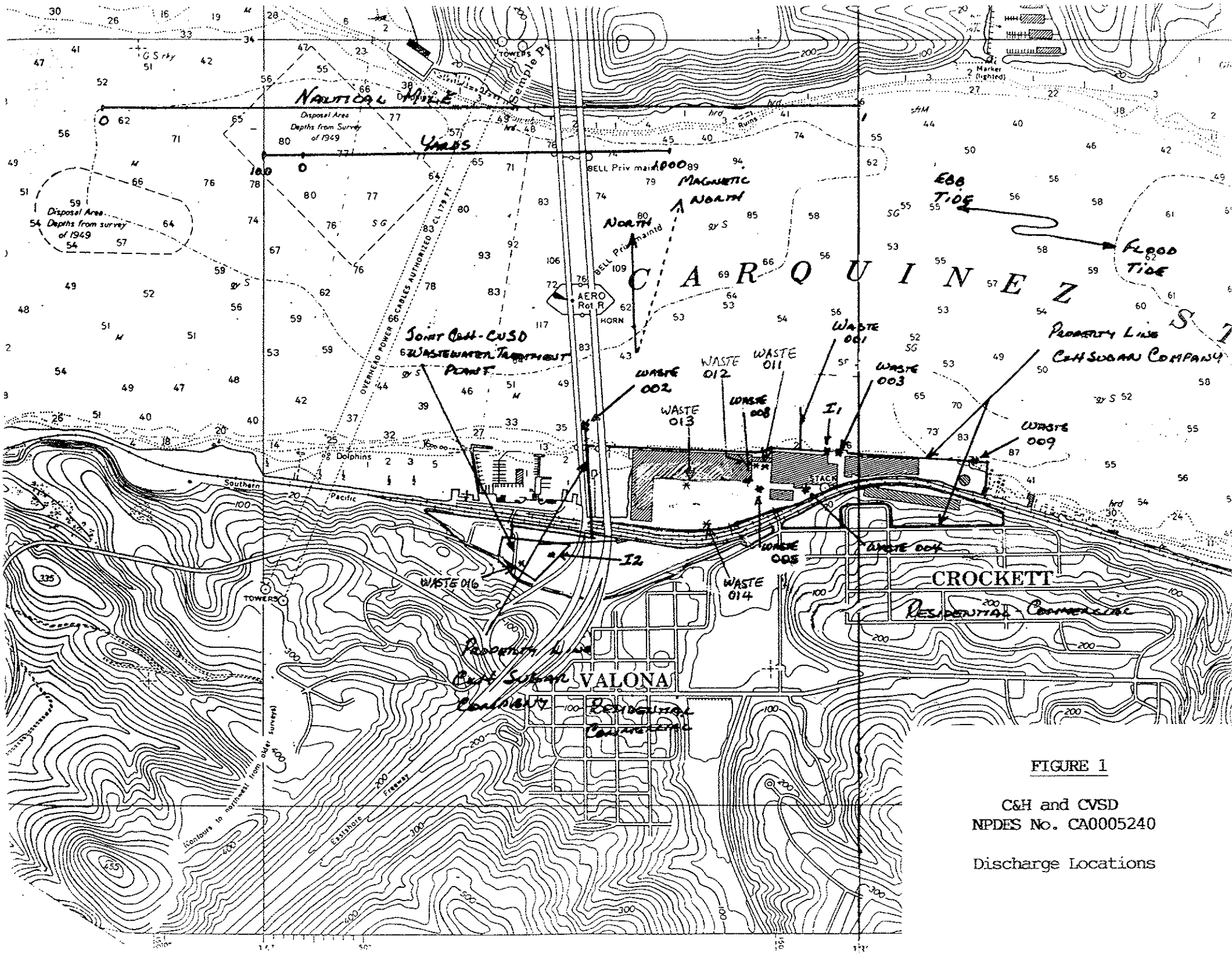


FIGURE 1

C&H and CVSD
NPDES No. CA0005240

Discharge Locations

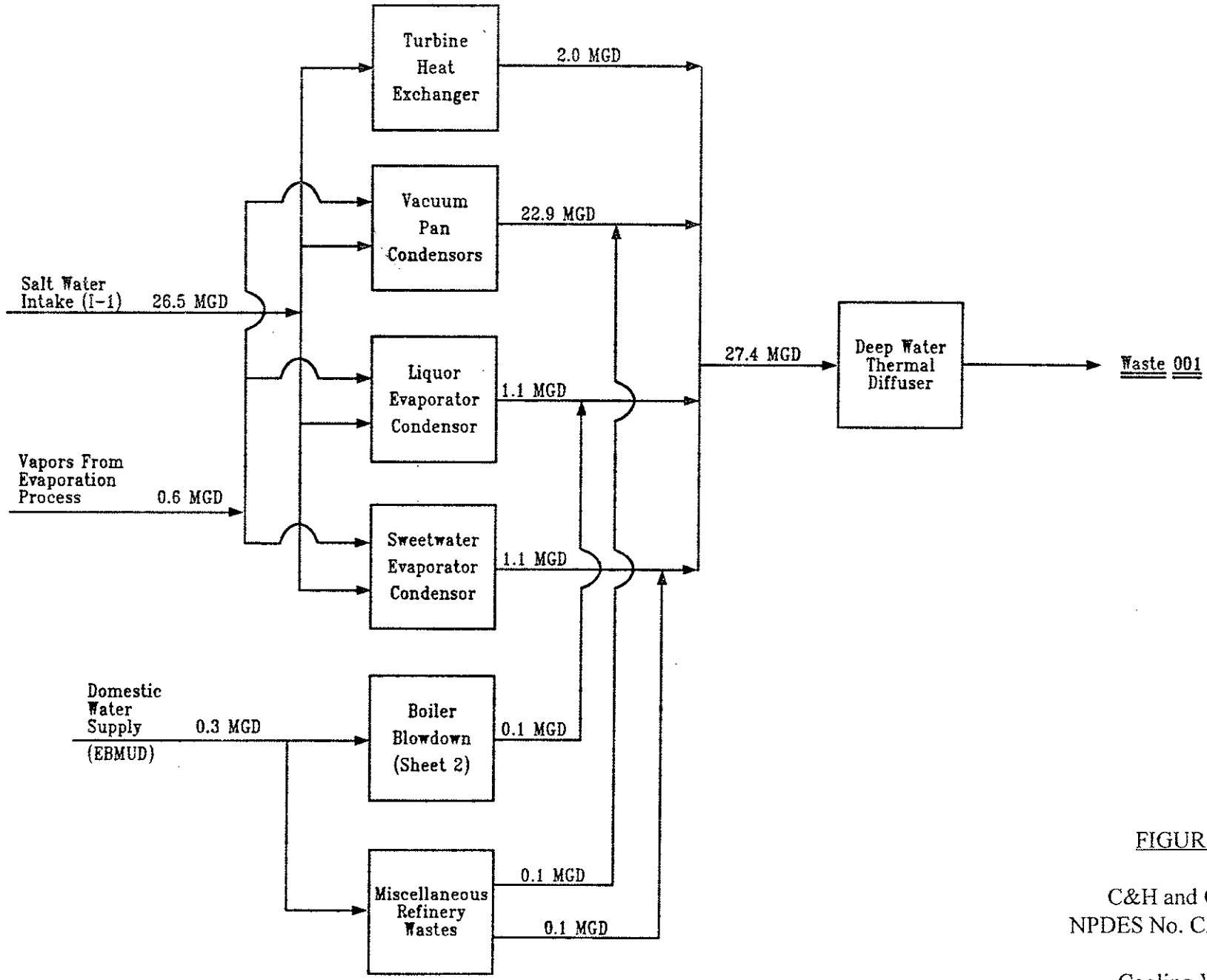


FIGURE 2

C&H and CVSD
NPDES No. CA0005240

Cooling Water
Flow Diagram

RRK

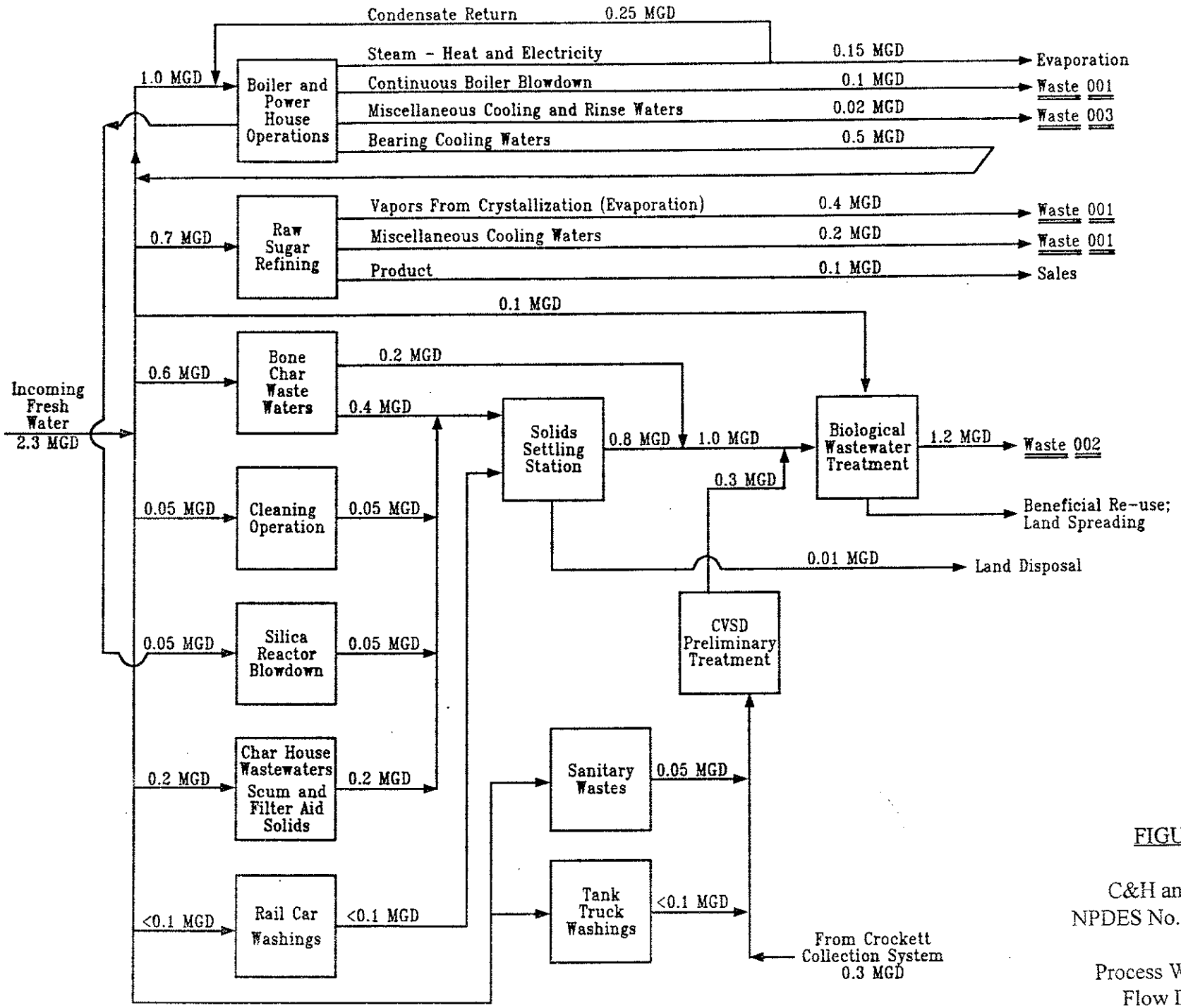


RRK

FIGURE 3

C&H and CVSD
NPDES No. CA0005240

Process Wastewater
Flow Diagram

# Process Flow Diagram

## Joint C&H - CVSD Secondary Wastewater Treatment Plant

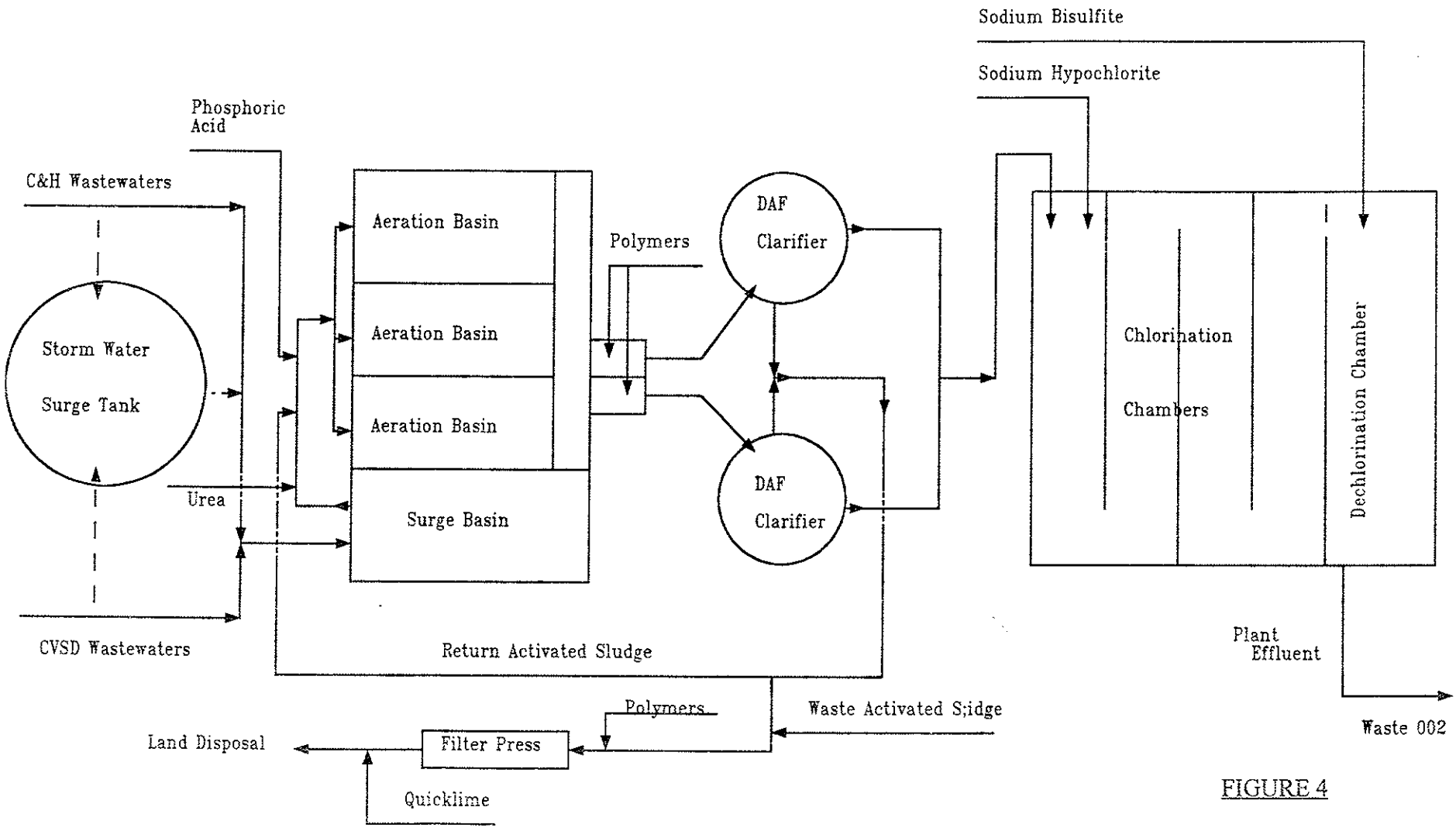


FIGURE 4

Process Flow Diagram
C&H and CVSD Joint Treatment Plant
NPDES No. CA0005240

CALIFORNIA REGIONAL WATER QUALITY CONTROL BOARD
SAN FRANCISCO BAY REGION

# SELF-MONITORING PROGRAM

FOR

CALIFORNIA AND HAWAIIAN SUGAR COMPANY, INC.

AND

CROCKETT-VALONA SANITARY DISTRICT

NPDES NO. CA0005240

ORDER NO. 95-078

CONSISTS OF

PART A (August 1993)
&
PART B Issued: April 19, 1995

PART B

# I. DESCRIPTION OF SAMPLING STATIONS

## A. INFLUENT AND INTAKE

| Station | Description |
|---|---|
| I-1 | At any point in the salt water intake system prior to any usage or treatment of intake water. |
| I-2 | At any point in the wastewater conveyance system from Crockett-Valona Sanitary District to the Joint C&H-CVSD Biological Wastewater Treatment Plant where flow measurements are representative of the flow rates of wastewater delivered by CVSD. |
| I-3 | At any point in the wastewater conveyance system where the flow measurements are representative of the flow rates of Waste 001 divereted for discharge as part of Waste 003. |

## B. EFFLUENT

| Station | Description |
|---|---|
| E-001 | At any point in the Waste 001 outfall between the point of discharge and the point at which all waste tributary to that discharge is present. |
| E-002 | At any point in the outfall from the treatment facilities for Waste 002 between the point of discharge and the point at which all waste tributary to that discharge is present. |
| E-002-D | At a point in the disinfection facilities at which adequate contact with the disinfectant has been achieved. |
| E-003 | At any point in the outfall for Waste 003 between the point of discharge and the point at which all waste tributary to that discharge is present. |
| E-004 | At any point in the outfall for Waste 004 between the point of discharge and the point at which all storm water tributary to that discharge is present. |
| E-005 | At any point in the outfall for Waste 005 between the point of discharge and the point at which all storm water tributary to that discharge is present. |

| | |
|---|---|
| E-008 | At any point in the outfall for Waste 008 between the point of discharge and the point at which all storm water tributary to that discharge is present. |
| E-009 | At any point in the outfall for Waste 009 between the point of discharge and the point at which all storm water tributary to that discharge is present. |
| E-011 | At any point in the outfall for Waste 011 between the point of discharge and the point at which all storm water tributary to that discharge is present. |
| E-012 | At any point in the outfall for Waste 012 between the point of discharge and the point at which all storm water tributary to that discharge is present. |
| E-013 | At any point in the outfall for Waste 013 between the point of discharge and the point at which all waste tributary to that discharge is present. |
| E-014 | At any point in the outfall for Waste 014 between the point of discharge and the point at which all storm water tributary to that discharge is present. |
| E-016 | At any point in the outfall for Waste 016 between the point of discharge and the point at which all storm water tributary to that discharge is present. |

C. RECEIVING WATERS

| Station | Description |
|---|---|
| C-10 | At a point in Carquinez Strait, located in the boil caused by Waste 001. |
| C-20 | At a point in Carquinez Strait, located at the edge of the wharf at the intersection of a line extended northerly from the outfall for Waste 003. |
| C-RE | At a point in Carquinez Strait, located at the edge of the wharf at its easterly end. |
| C-RW | At a point in Carquinez Strait, located at the edge of the wharf at its westerly end. |

## II. SCHEDULE OF SAMPLING AND ANALYSIS

A. The frequency of sampling and analysis shall be that given in Table 1 (attached).

B. Because the sugar refinery operates on a 14-day cycle with 10 days on and 4 days down, samples for process wastewater at stations E-001, E-002, and E-003 shall be collected in a well-ordered pattern, as defined below. Day 1 will be the first day of the 10 days on, with day 14 being the last day of the 4 days shutdown.

| Sampling Frequency | Day of cycle to be sampled |
|---|---|
| D | 1,2,3,4,5,6,7,8,9,10,11,12,13,14 |
| 5/W | 1,2,3,4,5,6,7,8,9,10 |
| 2/W | 2, 4, 7, 9 |
| W | 2, 7 |
| 2W | 2 |
| M | 2 |
| Q | 2 |
| 2/Y or Y | 2 |

## III. MODIFICATIONS TO PART A

A. Exclude paragraphs C.1; C.2.a. and b.; C.3.b., c., and d.; C.5; D.3; and D.4.

B. Section F.5. is amended to read:

F.5. **Annual Reporting**

a. **Process and sewage wastewaters**: By January 30 of each year, the discharger shall submit an annual report to the Regional Board covering the previous calender year for Wastes 001, 002, and 003. The report shall contain:

1) Both tabular and graphical summaries of the monitoring data for all parameters monitored during the previous year.

2) A comprehensive discussion of the compliance record and the corrective actions taken or planned which may be needed to bring the discharger into full compliace with the waste discharge requirements.

3) List of Approved Analyses to include:

a) Listing of analyses for which the discharger is approved by the California Department of Health Services.

b) List of analyses performed for the discharger by another approved laboratory shall also be submitted as part of the report.

c) List of "waived" analyses, as approved.

b. **Storm water**: The discharger shall submit an annual report by July 1 of each year covering data for the previous wet weather season. The annual storm water report shall include:

1) a tabulated summary of all sampling results and a summary of visual observations taken during the inspections;

2) a comprehensive discussion of the compliance record and the corrective actions taken or planned which may be needed to bring the discharger into full compliance with the waste discharge requirements.

3) a comprehensive discussion of the progress and/or success of source identification and control programs for non-effluent limited parameters such as BOD and TSS.

## IV. MISCELLANEOUS REPORTING

The discharger shall submit in the monthly self-monitoring report the metallic and organic test results together with the detection limits. All unidentified (non-Priority Pollutant) peaks detected in the EPA 624 or 8240, 625 or 8250 test methods shall be identified and semi-quantified pursuant to EPA guidelines for making tentative identifications. Hydrocarbons detected at <10 $\mu$g/l based on the nearest internal standard may be appropriately grouped and identified together as aliphatic, aromatic and unsaturated hydrocarbons. All other hydrocarbons detected at >10 $\mu$g/l based on the nearest internal standard shall be identified and semi-quantified.

I, Steven R. Ritchie, Executive Officer, hereby certify that the foregoing Self-Monitoring Program:

1. Has been developed in order to obtain data and document compliance with waste discharge requirements established in Regional Board Order No. 95-078.

2. Was adopted by the Board, and is effective on April 19, 1995.

3. May be reviewed at any time subsequent to the effective date upon written notice from the Executive Officer or request from the discharger, and revisions will be ordered by the Executive Officer.

STEVEN R. RITCHIE
Executive Officer

Attachment: Table I

TABLE 1
SCHEDULE FOR SAMPLING, MEASUREMENTS, AND ANALYSIS

| Sampling Station | I-1 | I-2 | I-3 | E-001 | | E-002 | | E-002D | E-003 | | E-004,E-005 E-008,E-009 | | E-011 E-014 | | E-013 E-016 | | "C" Stations [13] | |
|---|---|---|---|---|---|---|---|---|---|---|---|---|---|---|---|---|---|---|
| TYPE OF SAMPLE | C-24 | C-24 | C-24 | C-24 | G | C-24 | G | G | C-24 | G | G[9] | O | G[9] | O | G[9] | O | G | O |
| Flow Rate (MGD) | Cont | Cont | Cont | | Cont | | Cont | | W | | 5/Y [10] | | 3/Y [10] | | 2/Y [10] | | | |
| BOD, 5-day, 20°C (mg/l & kg/day) | W | | | W | | W | | | W | | | | | | | | | |
| Dissolved Oxygen (mg/l and % Saturation) | | | | | | M | | | | | | | | | | | Q | |
| Sulfides (if D.O. < 5mg/l) Total and Dissolved (mg/l) | | | | | | M | | | | | | | | | | | | |
| pH (units) | | | | | 5D/W | | Cont | | | 5D/W | 5/Y | | 3/Y | | 2/Y | | Q | |
| Temperature (°F or C) | | | | | 5D/W | | Cont | | | 5D/W | | | | | | | Q | |
| Total Coliform (MPN/100 ml) | | | | | | | | 3D/W | | | | | | | | | | |
| Chlorine Residual & Dosage [1] (mg/l & kg/day) | | | | | | | Cont or 2hr | | | | | | | | | | | |
| Settleable Matter (ml/l-hr) | | | | | | | 2W | | | | | | | | | | | |
| Total Suspended Solids (mg/l & kg/day) | | | | | | W | | | W | | 5/Y | | 3/Y | | 2/Y | | | |
| Oil and Grease (mg/l) | | | | | | W[2] | | | W[2] | | | | | | | | | |
| Total Organic Carbon (mg/l) | | | | | | | | | | | 5/Y | | 3/Y | | 2/Y | | | |
| Ammonia as N (mg/l) | | | | | | | 2W[3] | | | Q | | | | | | | Q | |
| Conductivity (μmhos/cm) | | | | M | | | 2W[3] | | | Q | 5/Y | | 3/Y | | 2/Y | | Q | |
| Fish Toxicity, 96-hr [4] (% surv. in undiluted effluent) | | | | | | | 2W[4] | | Q[4] | | | | | | | | | |
| Copper (mg/l & kg/day) | | | | | | M | | | Y | | 5/Y [11] | | 3/Y [11] | | | | | |
| Lead (mg/l & kg/day) | | | | | | Q | | | Y | | 5/Y [11] | | 3/Y [11] | | | | | |

| Sampling Station | I-1 | I-2 | I-3 | E-001 | | E-002 | | E-002D | E-003 | | E-004,E-005 E-008,E-009 | | E-011 E-014 | | E-013 E-016 | | "C" Stations [13] | |
|---|---|---|---|---|---|---|---|---|---|---|---|---|---|---|---|---|---|---|
| TYPE OF SAMPLE | C-24 | C-24 | C-24 | C-24 | G | C-24 | G | G | C-24 | G | G[9] | O | G[9] | O | G[9] | O | G | O |
| Mercury (mg/l & kg/day) | | | | | | Q[5] | | | Y | | | | | | | | | |
| Nickel (mg/l & kg/day) | | | | | | Q | | | Y | | | | | | | | | |
| Total Phenolic Compounds ($\mu$g/l) | | | | | | Q | | | | | | | | | | | | |
| Polynuclear Aromatic Hydrocarbons [6], EPA Method 610 or 8100 ($\mu$g/l) | | | | | | 2/Y | | | | | | | | | | | | |
| Purgeable Hydrocarbons [7], EPA Method 624 or 8240, ($\mu$g/l) | | | | | | Y | | | | | | | | | | | | |
| Extractable Hydrocarbons [7], EPA Method 625 or 8250 or 8270 ($\mu$g/l) | | | | | | Y | | | | | | | | | | | | |
| Organochlorine Pesticides and Polychlorinated Biphenyls [6], EPA Method 608 or 8080 ($\mu$g/l) | | | | | | Y | | | | | | | | | | | | |
| Nitrogen and Phosphorus Containing Pesticides, EPA Method 8140 | | | | | | Y | | | | | | | | | | | | |
| Chlorinated Herbicides and Other Chlorinated Acids, EPA Method 8150 | | | | | | Y | | | | | | | | | | | | |
| Tributyltin (ng/l) | | | | | | [8] | | | | | | | | | | | | |
| All Applicable Standard Observations | | | | | W | | 5D/W | | | W | | M[12] | | M[12] | | M[12] | | Q |
| | | | | | | | | | | | | | | | | | | |
| | | | | | | | | | | | | | | | | | | |
| | | | | | | | | | | | | | | | | | | |
| | | | | | | | | | | | | | | | | | | |

LEGEND FOR TABLE

TYPES OF SAMPLES

G = grab sample (collected on the same days as composites)
C-24 = 24-hour composite sample
O = observation

TYPES OF STATIONS

I = intake and/or supply station
E = waste effluent stations
C = receiving water stations

FREQUENCY OF SAMPLING

Cont = continuous
2hr = every two hours
W = once each week
M = once each month
Q = once each quarter (March, June, September and December)
Y = once each year

2W= every two weeks
2M= every two months
5D/W = 5 days each week
5/Y= five times each year
2/Y= twice each year

NOTES FOR TABLE 1:

1. **Chlorine dosage** shall be reported in lb/day on a daily basis. Chlorine residual after adequate contact and prior to dechlorinations shall be monitored continuously or every 2 hours and reported as a daily grab. Final chlorine residual after dechlorination shall be monitored and reported.

2. Separately collect and analyze at 8 hour intervals three grab samples for **oil and grease** on each sampling day. Report the arithmetic average of these as the value for that day, and use it to calculate the kg/day discharge rate. Alternately, the samples may be combined for analysis if their volume is proportional to flow rate at time collected within ± 5% and if the samples and their containers are handled in accordance with the procedures of Standard Methods for oil and grease samples. This means that glass containers used for sample collection or mixing shall be thoroughly rinsed with solvent as soon as possible after use, and the solvent rinsing shall be added to the composite wastewater sample for extraction and analysis.

3. **Ammonia and Conductivity** are required as part of the fish bioassays. Analysis shall be conducted on grab samples of the toxicity test water for each day of the 4-day toxicity test.

4. **Fish bioassays** shall be conducted using flow through tests in Waste 002, and static renewal tests in Waste 003. Compliance with the acute toxicity limitations shall be determined using tests with 3-spined stickleback until September 1996. During this period, the discharger shall conduct twelve monthly 96-hour flow through bioassays in Waste 002 using Rainbow Trout, and four quarterly 96-hr static renewal bioassays in Waste 003 using Rainbow Trout.

   Starting in October 1, 1996, compliance shall be determined using Rainbow Trouts. If data from this initial screening with Rainbow Trout show that the discharger may not be able to comply with the acute toxicity limit using Rainbow Trout, the discharger shall investigate the cause of the toxicity and take all reasonable steps to reduce toxicity. During this acute toxicity identification and reduction period which shall not pass beyond October 1, 1998, compliance shall be

determined using 3-spine stickleback. All tests shall be conducted in accordance with EPA protocols (Methods for Measuring the Acute Toxicity of Effluents and Receiving Waters to Freshwater and Marine Organisms, 4th edition, EPA/600/4-90/027).

5. For the first three calendar quarters subsequent to the effective date of this Self-Monitoring Program, the discharger shall analyze for **mercury** using an analytical method capable of low detection limits (less than 0.05 μg/l). At the end of this special study the analytical detection limits may return to 0.2 μg/l.

6. Report results for **polynuclear aromatic hydrocarbon** and **chlorinated pesticides and polychlorinated biphenyls** constituents as defined in the Permit.

7. Report results for **Purgeable Hydrocarbons and Extractable Hydrocarbons** as specified in Section V of this Monitoring Program. Specifically report and summarize on the results for chloroform and halomethanes (as defined in the Permit) for compliance purposes.

8. Within twelve (12) months of the effective date of this monitoring program, the discharge shall collect and analyze two (2) composite sample of Waste 002 for **tributyltin** at a detection level on the order of 5 nanograms per liter (ng/l). The discharger shall use a USEPA approved method, or a method which is capable of speciating organotins.

9. Storm water discharges shall be **sampled during the first 30 minutes of the first daylight storm event** which occurs during scheduled operating periods and which is preceded by at least 3 days of dry weather. If sampling during the first 30 minutes if impractical, samples can be taken during the first one hour of discharge, and the discharger shall explain in the monitoring report why the grab sample(s) could not be taken in the first 30 minutes.

   A storm event is defined as a continuous or semi-continuous period of rainfall which produces significant storm water discharge. Significant storm water discharge is a continuous discharge of storm water for approximately one hour or more.

   The discharger may apply to the Executive Officer for reduced number of storm water monitoring locations if the discharger can establish and document that storm water discharges from different locations are substantially identical.

10. Measure or estimate the total **volume of storm water discharge** from each station for the storm event sampled. Estimates shall be determined from the amount of rainfall and the area of drainage multiplied by a drainage factor satisfactory to the Executive Officer. The areas and drainage factors shall be proposed by the discharger in the SWPPP.

11. Analysis of **copper and lead in storm water discharges** are required for discharge during the first wet weather season: October 1, 1995 through April 30, 1996.

12. See Part A Section C.3.a. Also, **storm water observations** during the dry period (May 1 through September 30) may be reduced to twice during this five month period.

13. **Receiving water** analysis required at C-RE station only during the dischargers' participation in the S.F. Bay Estuary Regional Monitoring Program. The tidal conditions during sampling shall be reported with the analytical results. Standard observations are required at all 'C' stations.