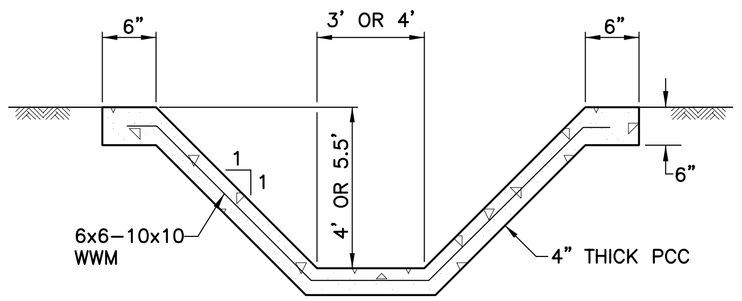

PCC TRAPEZOIDAL CHANNEL (1/20)
NTS

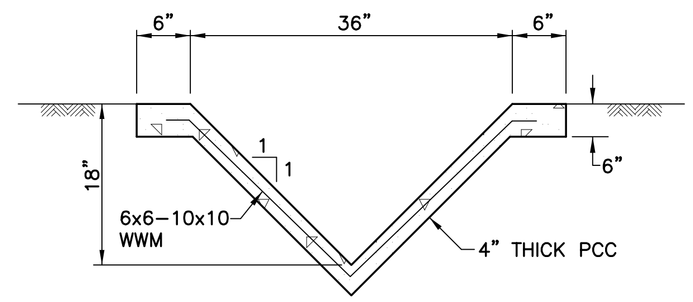

PCC V-DITCH (2/20)
NTS

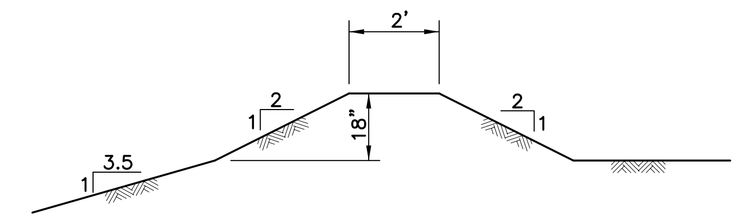

TOP DECK EARTHEN BERM (3/20)
NTS

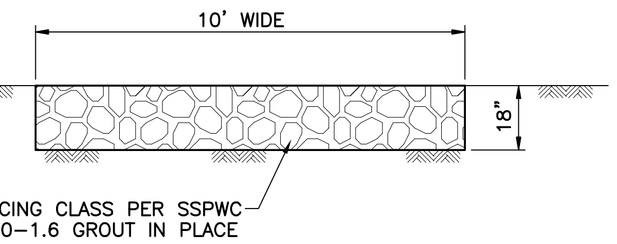

GROUTED RIPRAP (4/20)
NTS

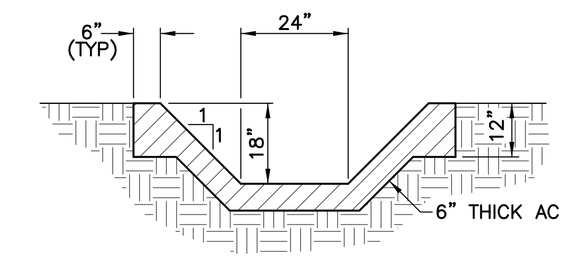

AC DOWNDRAIN TRAPEZOIDAL CHANNEL (8/20)
NTS

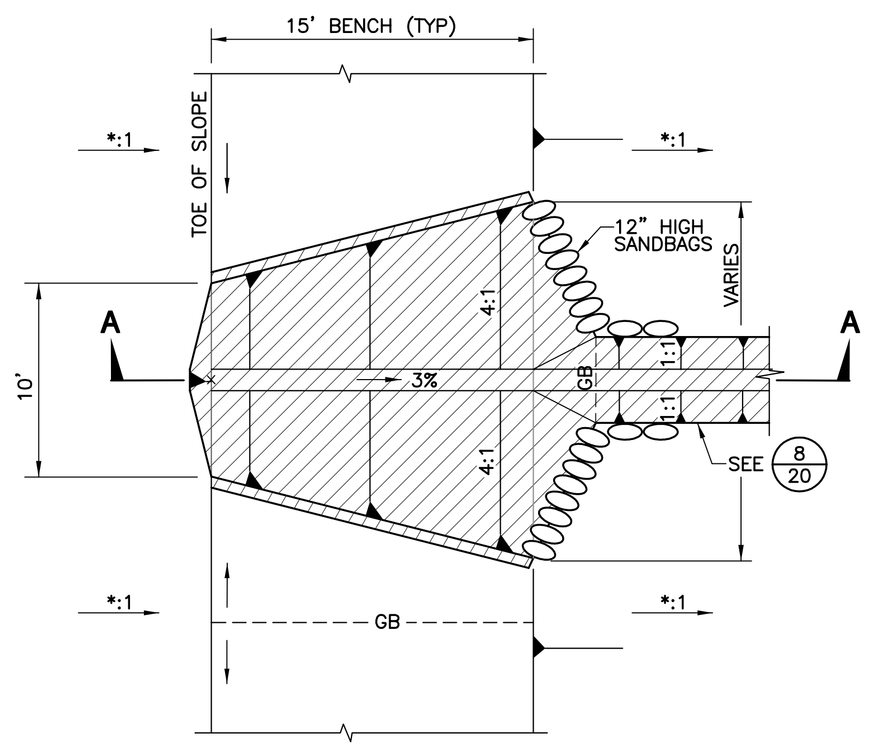

PLAN

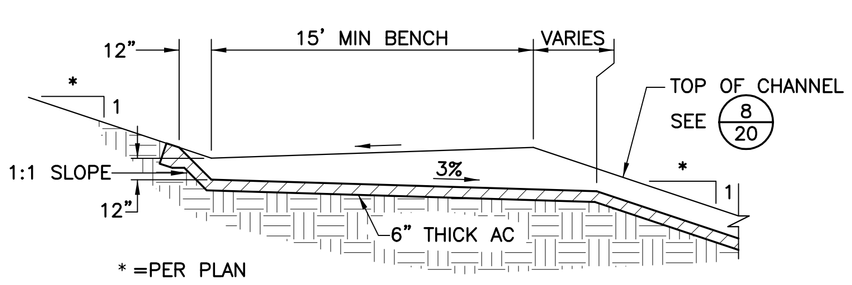

SECTION A-A

TYPICAL BENCH INLET (5/20)
NTS

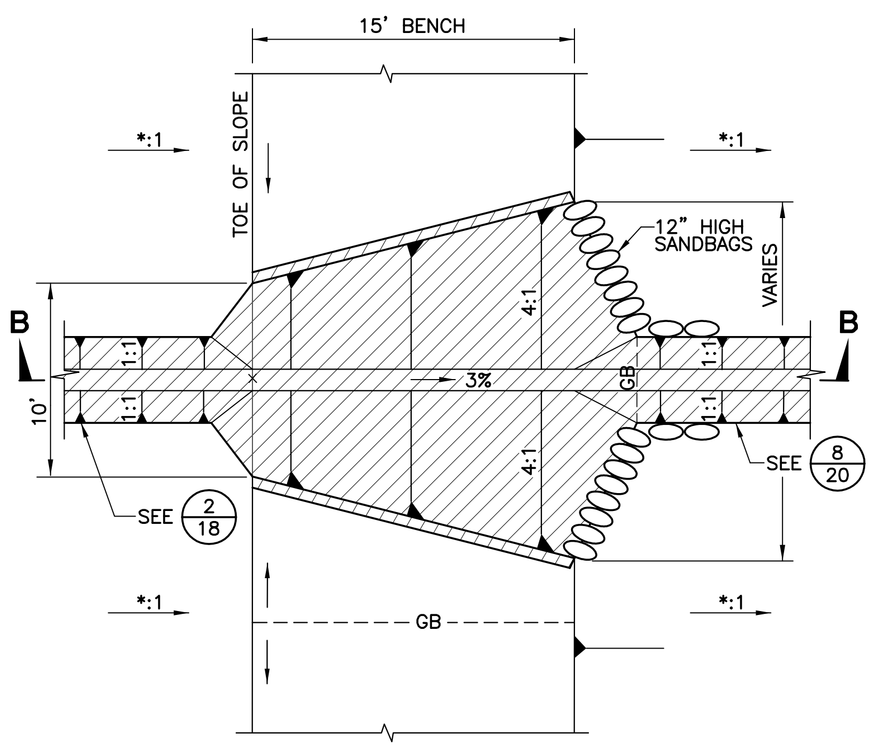

PLAN

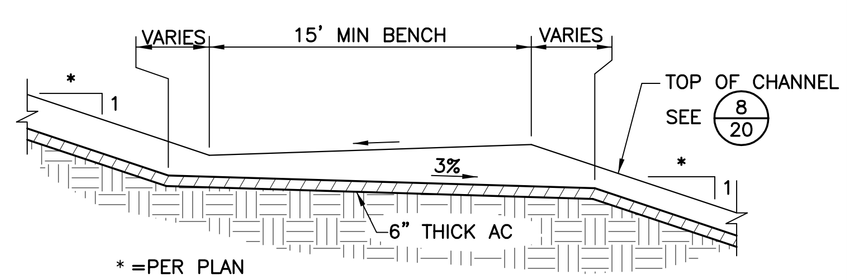

SECTION B-B

AC DOWNDRAIN BENCH CROSSING (6/20)
NTS

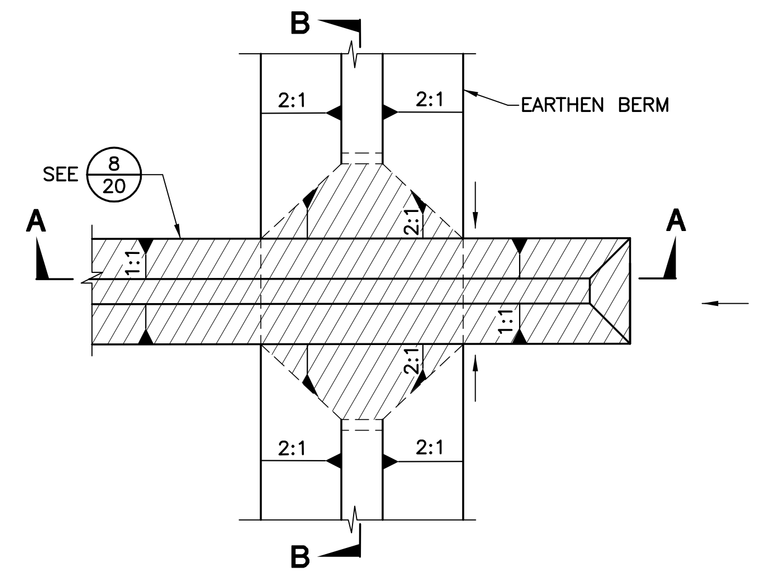

PLAN

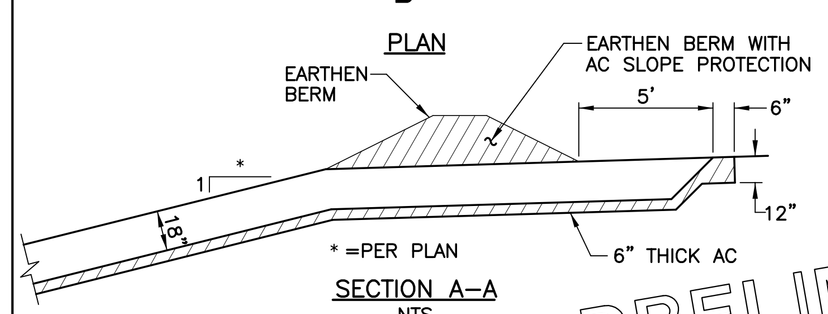

SECTION A-A
NTS

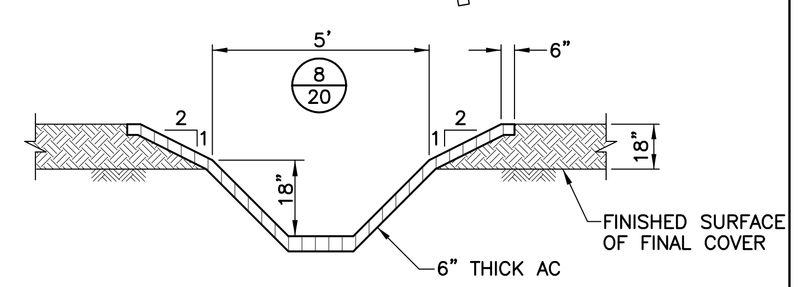

SECTION B-B
NTS

TOP DECK INLET (7/20)
NTS

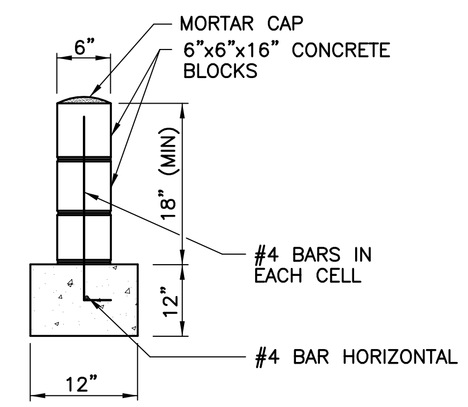

SPLASH WALL (9/20)
NTS

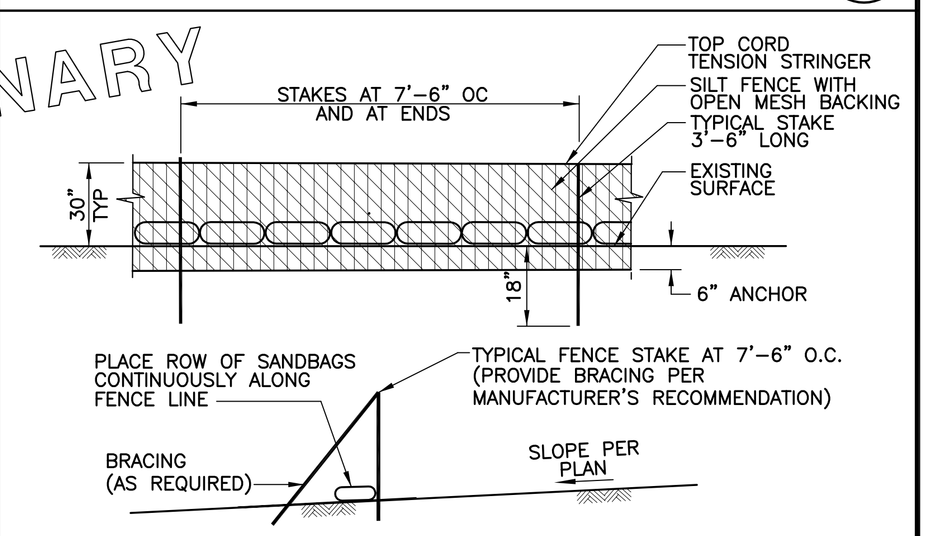

SILT FENCE DETAIL (10/20)
NTS

FIGURE 19

PRELIMINARY

NO.	REVISION DESCRIPTION	BY:

BAS
BRYAN A. STIRRAT & ASSOCIATES
CONSULTING CIVIL & ENVIRONMENTAL ENGINEERS
1360 E. VALLEY VISTA DRIVE
DIAMOND BAR, CALIFORNIA 91765
(909) 860-7777

GREGORY CANYON LANDFILL
DETAIL SHEET

DESIGNED BY : G.V.N.	SCALE : AS SHOWN	
DRAWN BY : T.J.S.	DATE : 8-1998	FILE NO.: 29158DB
CHECKED BY :	DATE :	DRAWING 21
APPROVED BY :	DATE :	

H:\dwg\gregory\2001\29158db.dwg 05/20/2003 13:09

FOR PERMIT PURPOSES ONLY - NOT FOR CONSTRUCTION