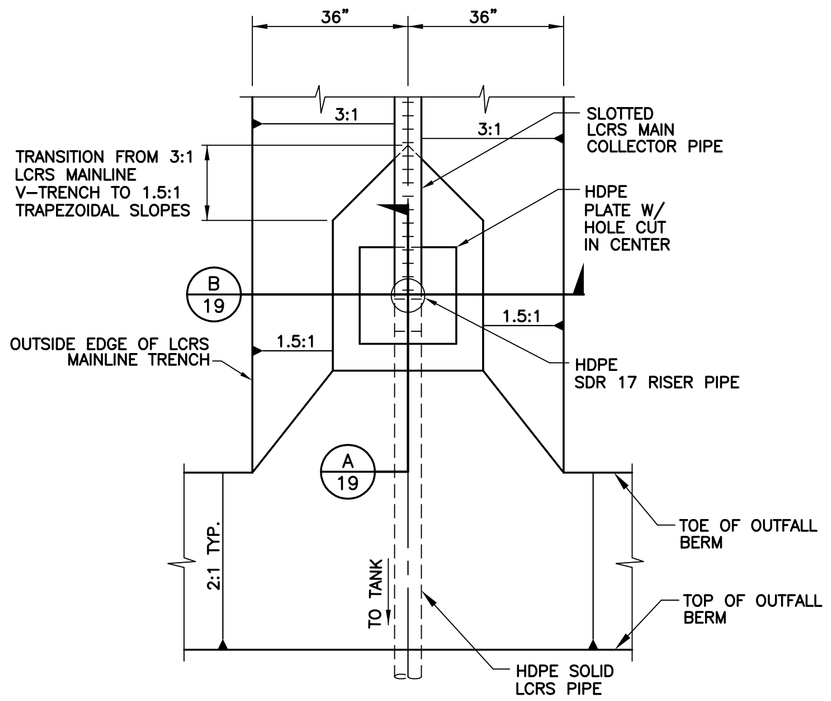

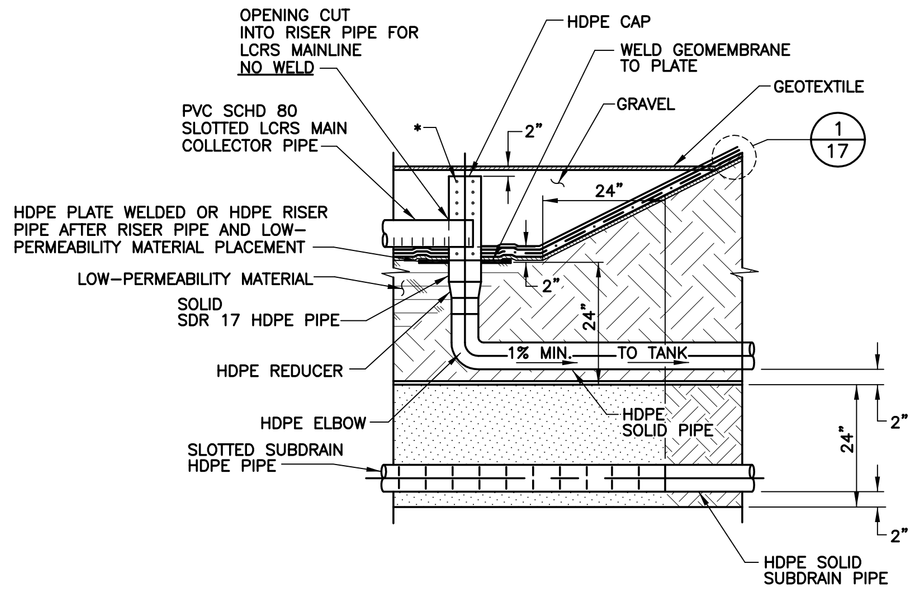

SECTION A 19
NTS

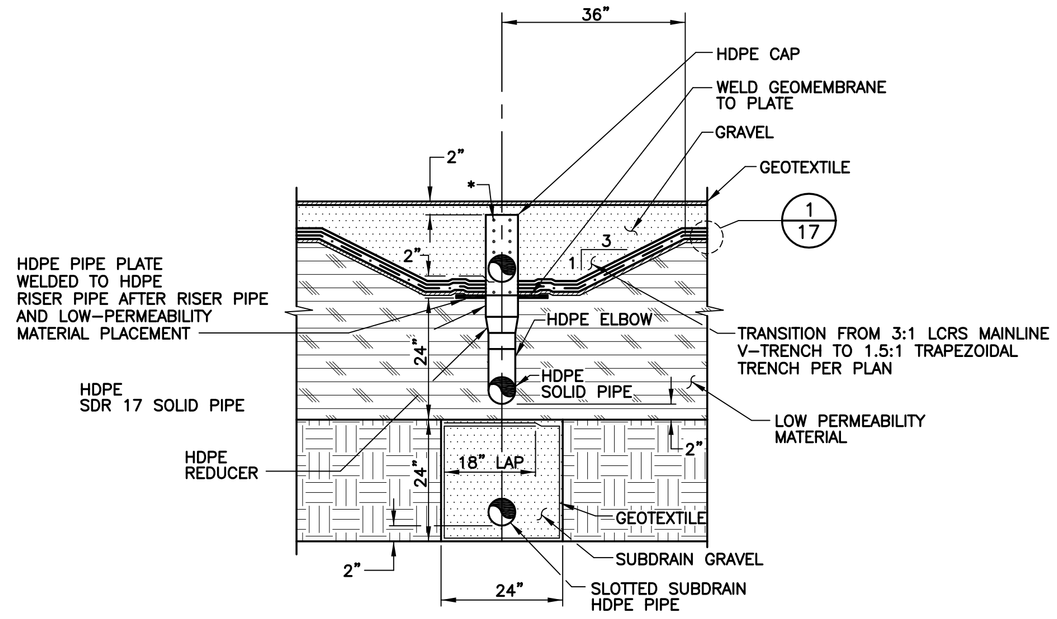

SECTION B 19
NTS

LCRS AND SUBDRAIN OUTFALL PLAN

NTS

1
19

PRELIMINARY

FIGURE 15A

NO.	REVISION DESCRIPTION	BY:

BAS
BRYAN A. STIRRAT & ASSOCIATES
CONSULTING CIVIL & ENVIRONMENTAL ENGINEERS
1360 E. VALLEY VISTA DRIVE
DIAMOND BAR, CALIFORNIA 91765
(909) 860-7777

GREGORY CANYON LANDFILL

DETAIL SHEET

DESIGNED BY : T.W.	SCALE : AS SHOWN	
DRAWN BY : J.P.J.	DATE : 9-2001	FILE NO.: 29161DB.DWG
CHECKED BY :	DATE :	DRAWING 20
APPROVED BY :	DATE :	

H:\dwg\gregory\2001\29161db.dwg 05/20/2003 13:06

FOR PERMIT PURPOSES ONLY - NOT FOR CONSTRUCTION