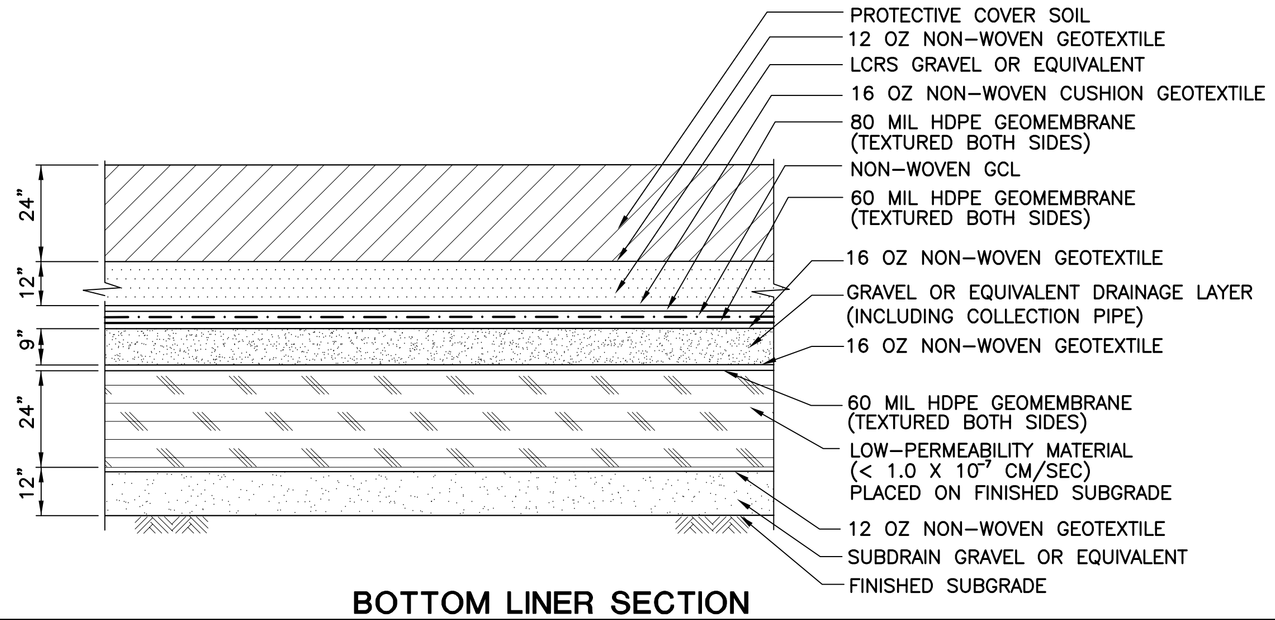

BOTTOM LINER SECTION

NTS

1/17

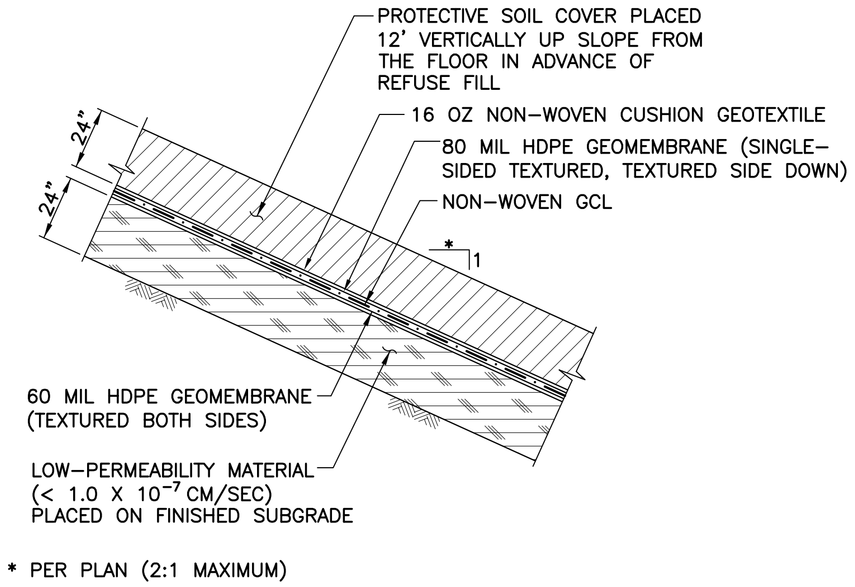

SLOPE LINER SECTION

NTS

2/17

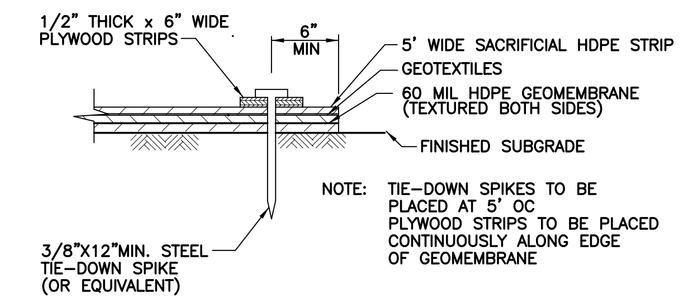

TIE-DOWN FOR SLOPE

TIE-DOWN FOR LINER TERMINATION ALONG SLOPE

NTS

3/17

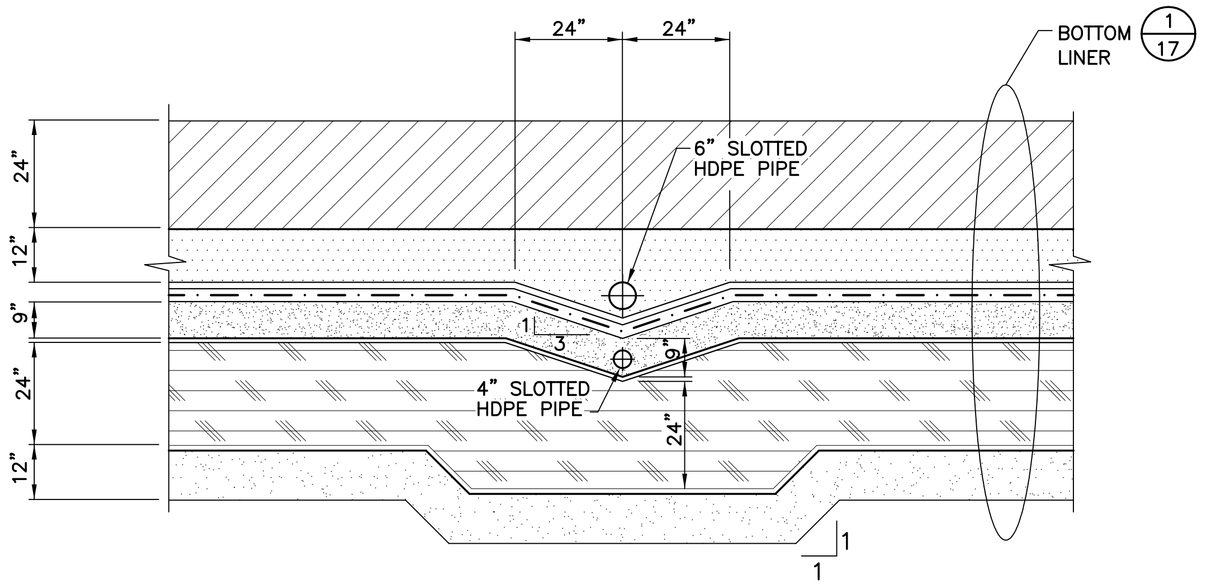

TRENCH FOR LCRS LATERAL

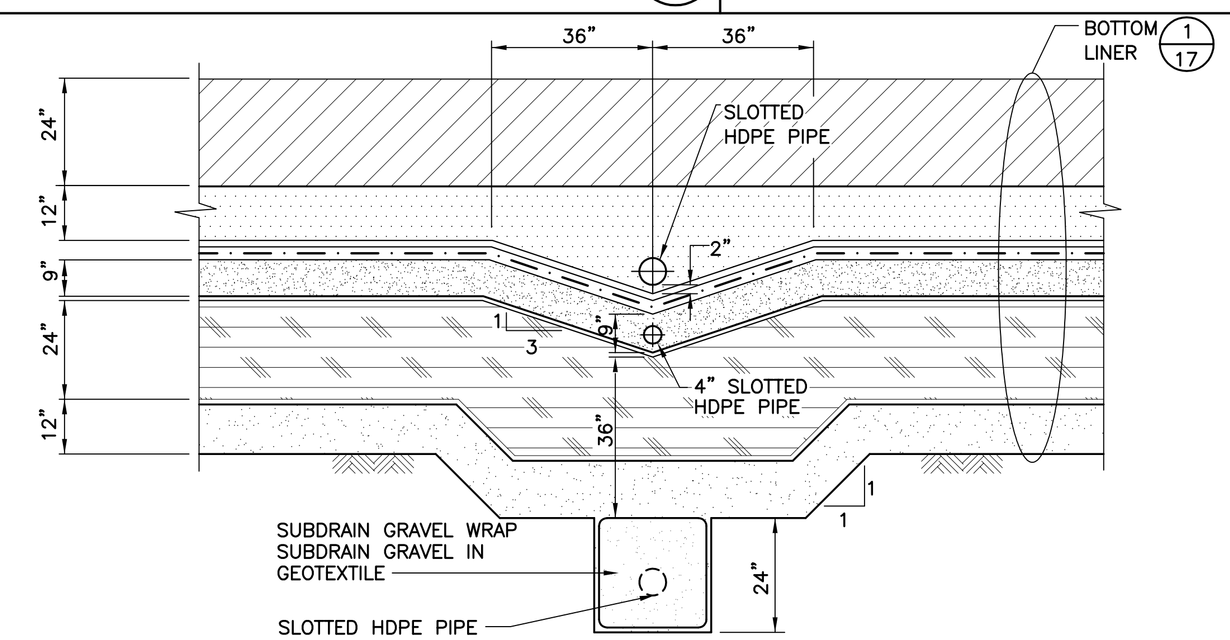

LCRS MAINLINE

LCRS SECTIONS

NTS

4/17

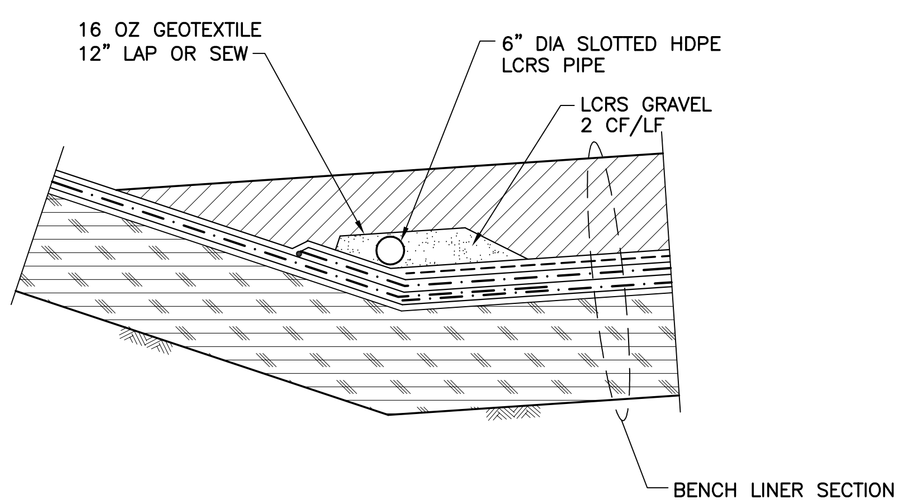

LCRS BENCH COLLECTOR

NTS

5/17

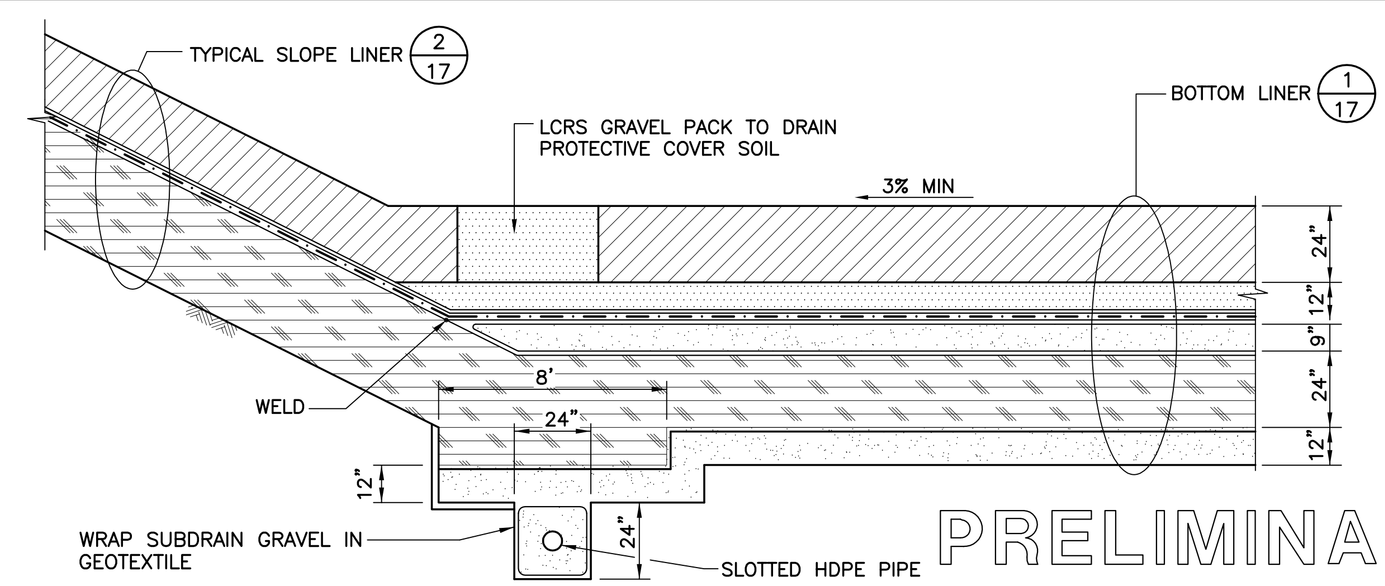

PRELIMINARY

TYPICAL BOTTOM AND SLOPE LINER TRANSITION

NTS

6/17

FIGURE 14

NO.	REVISION DESCRIPTION	BY:

BAS
BRYAN A. STIRRAT & ASSOCIATES
CONSULTING CIVIL & ENVIRONMENTAL ENGINEERS
1360 E. VALLEY VISTA DRIVE
DIAMOND BAR, CALIFORNIA 91765
(909) 860-7777

GREGORY CANYON LANDFILL
DETAIL SHEET

DESIGNED BY : T.W.	SCALE : AS SHOWN	
DRAWN BY : J.P.J.	DATE : REV 1-05	FILE NO.: 29159DB.DWG
CHECKED BY :	DATE :	DRAWING 18
APPROVED BY :	DATE :	

FOR PERMIT PURPOSES ONLY - NOT FOR CONSTRUCTION