NOTE:

1) THE PERIMETER OPEN CHANNEL SHALL CONVEY RUNOFF FROM NATURAL UNDISTURBED AREAS AND DISTURBED AREAS THAT HAVE ESTABLISHED VEGETATION FOR MORE THAN TWO YEARS. RUNOFF FROM THIS CHANNEL SHALL BYPASS PROPOSED DESILTING BASINS.

2) THE PERIMETER STORM DRAIN PIPE SHALL CONVEY RUNOFF FROM DISTURBED AREAS AND WILL DISCHARGE TO PROPOSED DESILTING BASINS.

3) RUNOFF FROM THE METAL FLUME MAY BE DIVERTED TO THE CHANNEL CROSSING AND INTO THE PERIMETER OPEN CHANNEL ONCE THE TRIBUTARY AREAS TO THE METAL FLUME HAVE ESTABLISHED VEGETATION FOR MORE THAN TWO YEARS.

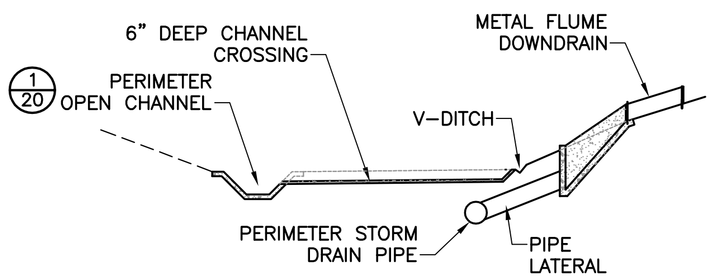

SECTION B-B (1/20)
NTS

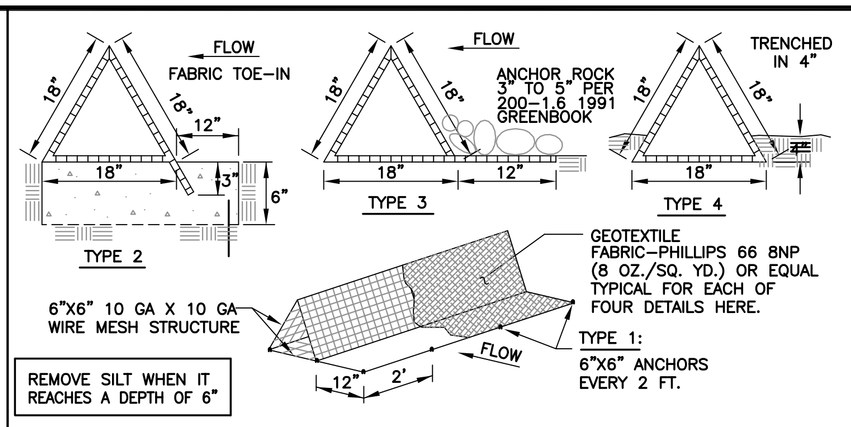

TRIANGULAR SEDIMENT FILTER DIKE (2/10A)
NTS

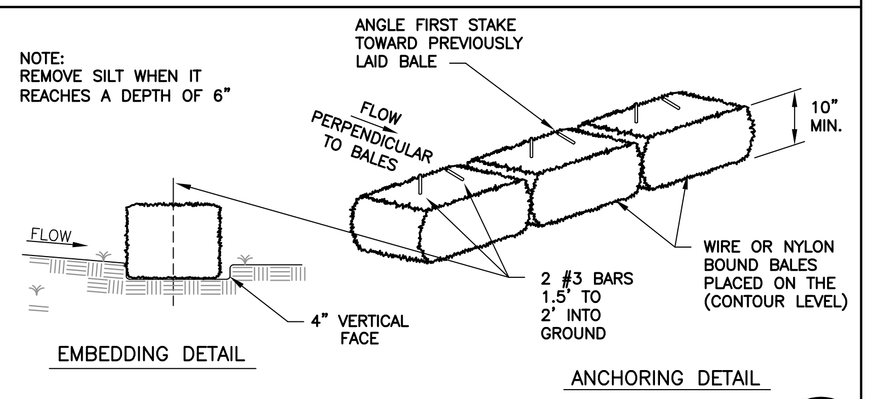

HAY BALE DIKE (3/10A)
NTS

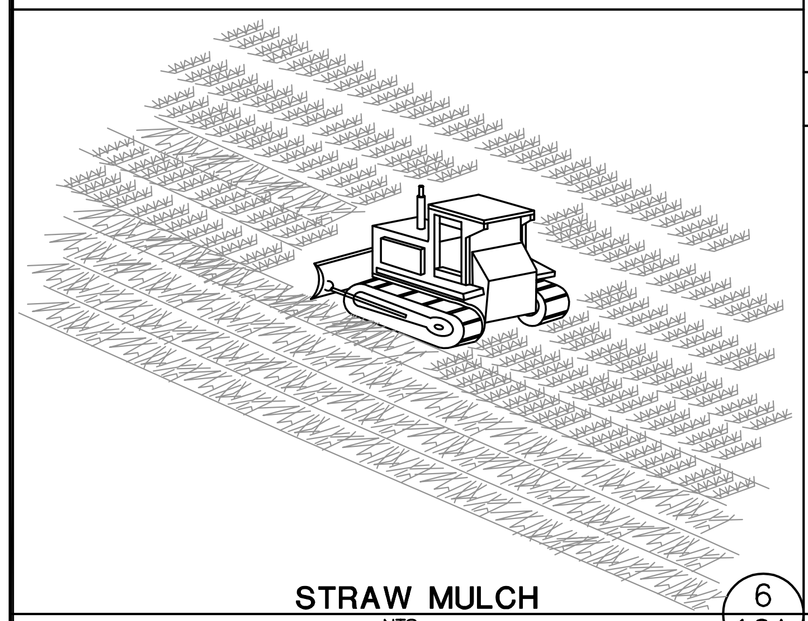

STRAW MULCH (6/10A)
NTS

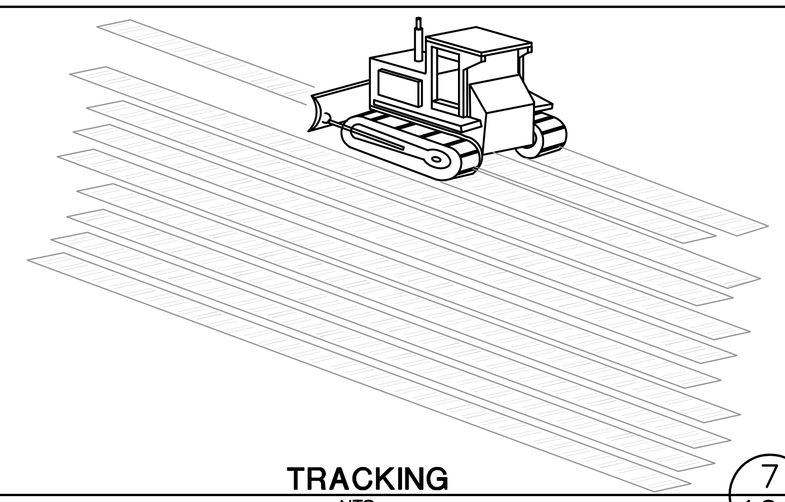

TRACKING (7/10A)
NTS

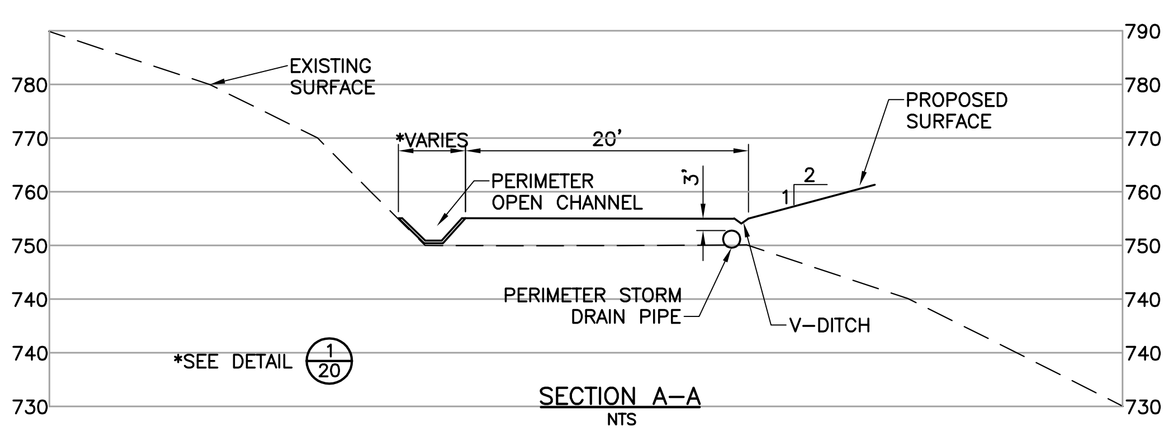

TYP. BERM @ TOP OF FILL SLOPES (9/10A)
NTS

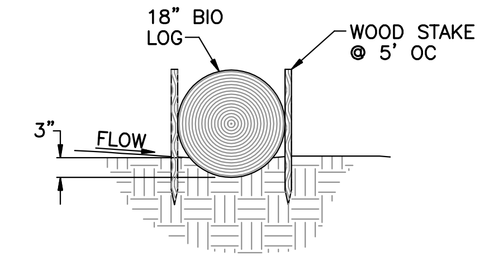

BIO LOG (4/10A)
NTS

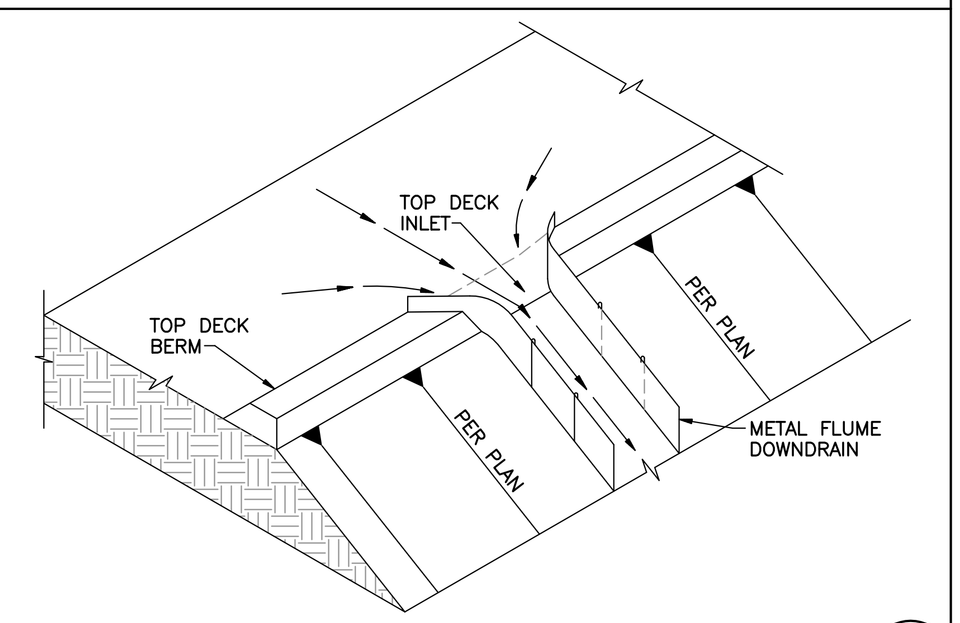

TOP DECK INLET AND BERM (5/10A)
NTS

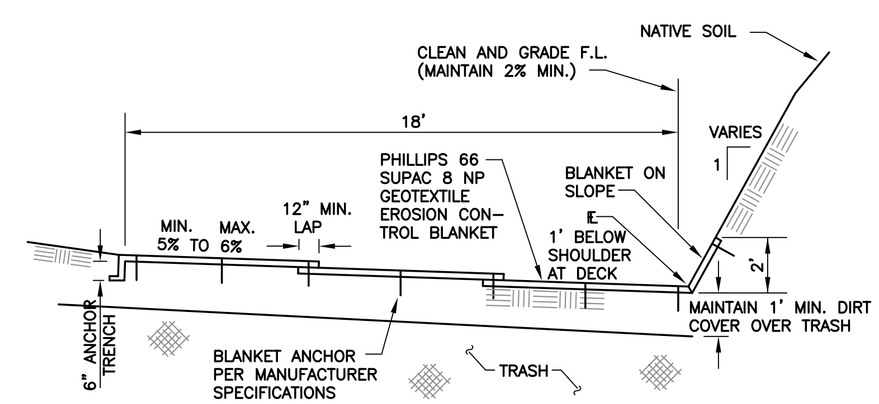

EROSION CONTROL BLANKET (8/10A)
NTS

THIS BERM SHALL BE CONSTRUCTED (OR EXISTING BERMS REPAIRED) WHERE CALLED FOR ON PLANS, TO PREVENT SLOPE EROSION IN CASE OF LOCALIZED REFUSE SETTLEMENT.

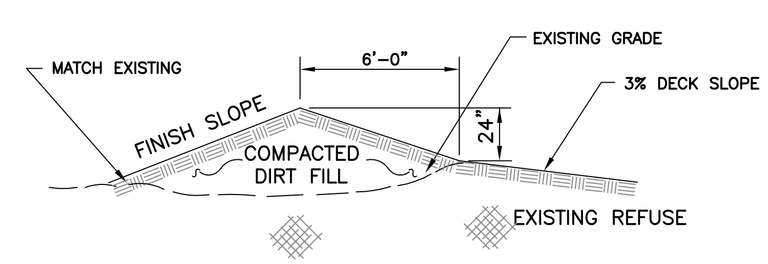

TYP. BERM @ TOP OF FILL SLOPES (10/10A)
NTS

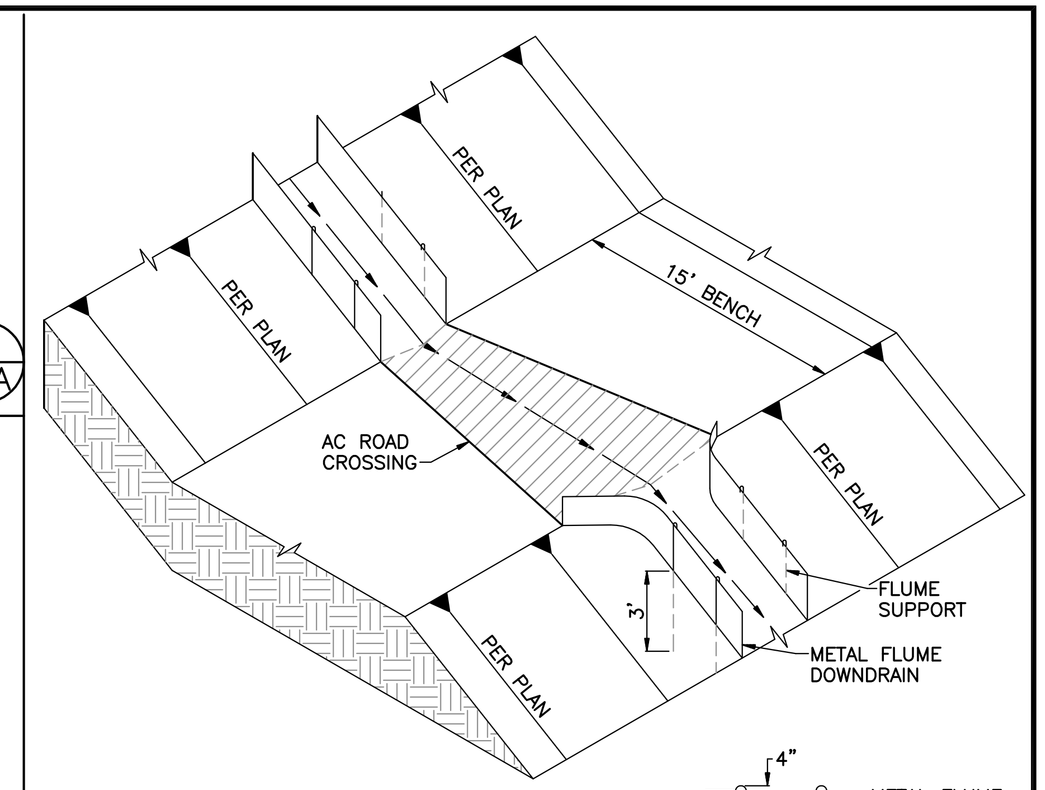

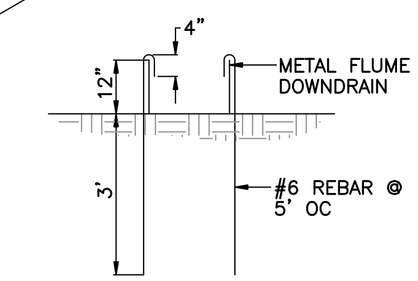

FLUME SUPPORT

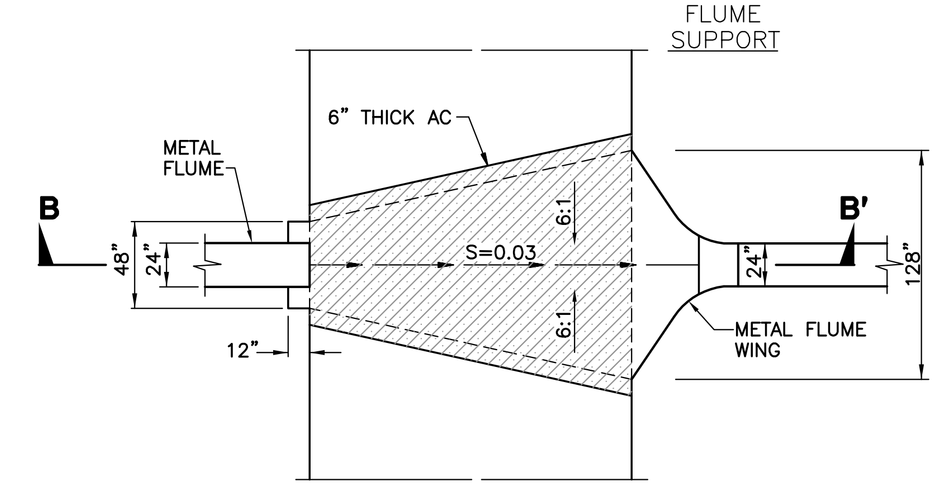

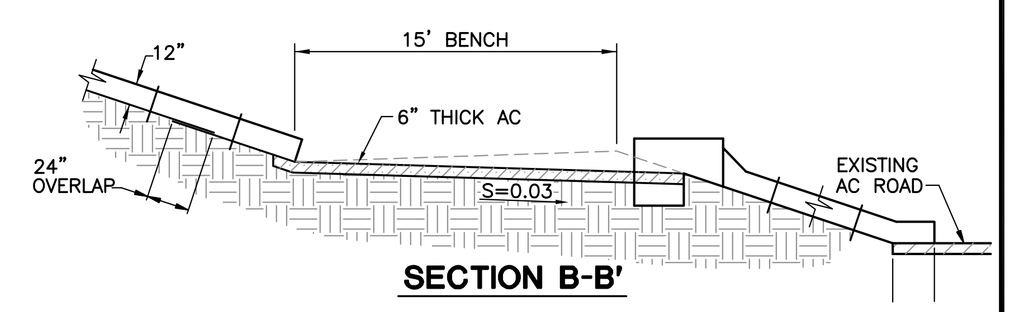

SECTION B-B'

PRELIMINARY

TYPICAL BENCH CROSSING DETAIL (11/10A)
NTS

FIGURE 21A

NO.	REVISION DESCRIPTION	BY:

BAS
BRYAN A. STIRRAT & ASSOCIATES
CONSULTING CIVIL & ENVIRONMENTAL ENGINEERS
1360 E. VALLEY VISTA DRIVE
DIAMOND BAR, CALIFORNIA 91765
(909) 860-7777

GREGORY CANYON LANDFILL
BMP DETAILS AND SECTIONS

DESIGNED BY : A.C.R.	SCALE : AS SHOWN	
DRAWN BY : C.A.L.	DATE : 4-2002	FILE NO.: 29402DB.DWG
CHECKED BY :	DATE :	DRAWING 11
APPROVED BY :	DATE :	

FOR PERMIT PURPOSES ONLY - NOT FOR CONSTRUCTION