APPENDIX J

DRAINAGE CALCULATIONS

BAS
(909) 860-7777
BRYAN A. STIRRAT & ASSOCIATES
CIVIL AND ENVIRONMENTAL ENGINEERS
1360 VALLEY VISTA DRIVE • DIAMOND BAR, CA 91765

JOB: GREGORY HYDROLOGY / HYDRAULICS
SHEET NO. 1 OF 4
CALCULATED BY: CHM DATE: 10-4-2004
CHECKED BY: DATE:
SCALE: N.A.

EASTERN DESILTING

AREA @ 368.0 = 62,890 SF

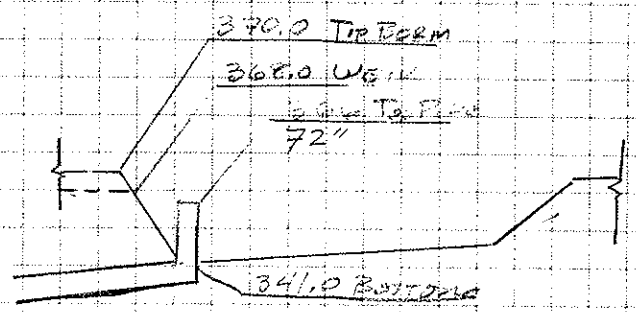

PURPOSE: [illegible] THAT COULD BE SERVED IN THE EASTERN BASIN DESIGN AREA LAYOUT. USE MEDIUM SILT PARTICLE CRITERIA (0.02 mm).

CRITERIA: BASIN EFFICIENCY EQUATION

$$A_S = \frac{1.2\ Q_{10}}{V_S}$$

WHERE:

Q_{10} - 10-YEAR PEAK RUNOFF (CFS)

V_S - SETTLING VELOCITY (FPS)

A_S - BASIN AREA (SF)

A_U - AREA UNDERCUT (SF)

RATIONAL METHOD

$Q_{10} = CIA$

Q_{10} 3.00 - 3.03 = 88.85 CFS

$$Q_{10} = \frac{(0.00096)(62{,}890)}{1.2} = 50.3\ \text{CFS}$$

Σ AREA = 79.2 ACRES

$$A_{UE} = \frac{50.3\ \text{CFS}}{1.1\ \text{CFS/AC}} = \underline{44.8\ \text{AC}}$$

$$\text{AVE CFS/AC} = \frac{88.9}{79.2} = 1.1\ \frac{\text{CFS}}{\text{AC}}$$

BAS
(909) 860-7777
BRYAN A. STIRRAT & ASSOCIATES
CIVIL AND ENVIRONMENTAL ENGINEERS
1360 VALLEY VISTA DRIVE • DIAMOND BAR, CA 91765

EASTERN BASIN (CONT)

PURPOSE: DETERMINE SPILLWAY & INLET PIPE SIZE TO CONVEY 100-YEAR FLOW RUNOFF

CRITERIA: $Q = CLH^{3/2}$ WEIR $\quad Q = CA(2gh)^{1/2}$ ORIFICE

WHERE: $Q = Q_{100}$
$C = (3.5)$ KINGS HANDBOOK
L = LENGTH OF WEIR
H = HEIGHT OF RUNOFF ABOVE WEIR

WHERE: $Q = Q_{100}$
$C = 0.6$ (KINGS)
A = AREA OF ORIFICE
g = GRAVITY 32.2 FT/S²
h = HEIGHT OF RUNOFF ABOVE ORIFICE

$Q_{100} = 3.00 - 3.03 = 148.3$ CFS

SPILLWAY WEIR: $L = \dfrac{Q_{100}}{C H^{3/2}} = \dfrac{148.3}{(3.5)(2)^{3/2}} = 14.9$ FT

USE 15 FT

STANDPIPE INLET ORIFICE: $A = \dfrac{Q_{100}}{C(2gh)^{1/2}} = 21.8$ FT²

$21.8 = \pi \dfrac{D^2}{4} = 5.2$ FT

72" > 5.2 FT OK.

CHECK WEIR RESTRICTION

$L = D\pi = 18.8$ FT

$Q = 3.5(18.8)(2)^{3/2}$

$= 186$ CFS > 148 CFS O.K.

BAS
(909) 860-7777
BRYAN A. STIRRAT & ASSOCIATES
CIVIL AND ENVIRONMENTAL ENGINEERS
1360 VALLEY VISTA DRIVE • DIAMOND BAR, CA 91765

JOB: GREGORY CANYON HYDROLOGY/HYDRAULICS
SHEET NO. 3 OF 4
CALCULATED BY: CHM DATE: 10-4-2004
CHECKED BY: DATE:
SCALE: N.A.

WESTERN BASIN

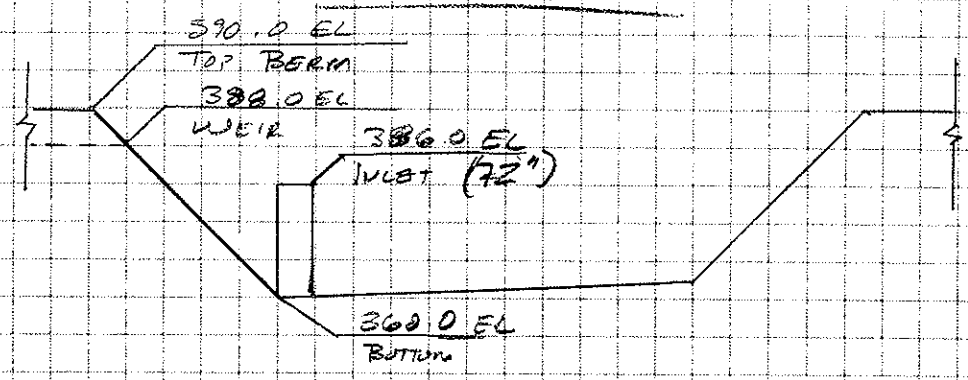

PURPOSE: CALCULATE THE UNCOVERED AREA THAT COULD BE SERVED BY THE WESTERN BASIN DESIGN AREA. LAYOUT. USE MEDIUM SILT PARTICLE CRITERIA (0.02mm, 0.00096 FPS)

CRITERIA: BASIN EFFICIENCY EQUATION

$$A_s = \frac{1.2\ Q_{10}}{V_s} \qquad \Sigma Q_{10} \Rightarrow 2.00 - 2.09 = 89.7\ \text{CFS}$$

$$V_s = 0.00096\ \text{FPS}$$

$$A_s = 77{,}500\ \text{SF}$$

$$Q_{10} = \frac{(0.00096)(77{,}500)}{1.2} = 62\ \text{CFS} \qquad \Sigma\ \text{AREA} = 122.7\ \text{ACRE}$$

$$CI = 0.7\ \frac{\text{CFS}}{\text{ACRE}}$$

$$A_{uW} = \frac{62}{0.7} = 84.8\ \text{ACRES}$$

TOTAL $A_u = A_{uW} + A_{uE} = \underline{129.6\ \text{ACRES}}$

BAS
(909) 860-7777
BRYAN A. STIRRAT & ASSOCIATES
CIVIL AND ENVIRONMENTAL ENGINEERS
1360 VALLEY VISTA DRIVE • DIAMOND BAR, CA 91765

JOB Gregory Canyon Hydrology / Hydraulics
SHEET NO. 4 OF 4
CALCULATED BY CHM DATE 10/4/2004
CHECKED BY DATE
SCALE N.A.

WESTERN BASIN (Cont)

PURPOSE: DETERMINE SPILLWAY & INLET PIPE SIZE TO CONVEY 100-YR 24-HR RUNOFF

CRITERIA: $Q = CLH^{3/2}$ WEIR $Q = CA(2gh)^{1/2}$

$Q_{100} \Rightarrow 2.00 - 2.09 = 150.1$ CFS

SPILLWAY WEIR: $L = \frac{150.1}{(3.5)(2)^{3/2}} = 15.2$ FT

USE 16.0 FT

STANDPIPE INLET ORAFICE: $A = \frac{Q_{100}}{C(2gh)^{1/2}} = \frac{150.1}{0.6(128.8)^{1/2}} = 22.0$ SF

$22.0 = \pi \frac{D^2}{4} \Rightarrow D = \left(\frac{22.0(4)}{\pi}\right)^{1/2} = 5.3$ FT

72" > 64" O.K.

CHECK WEIR CONTROL OF STANDPIPE $L = D\pi = 18.8$ FT

$Q = 3.5(18.8)(2)^{3/2} = 186$ CFS > 150.1 CFS

O.K.

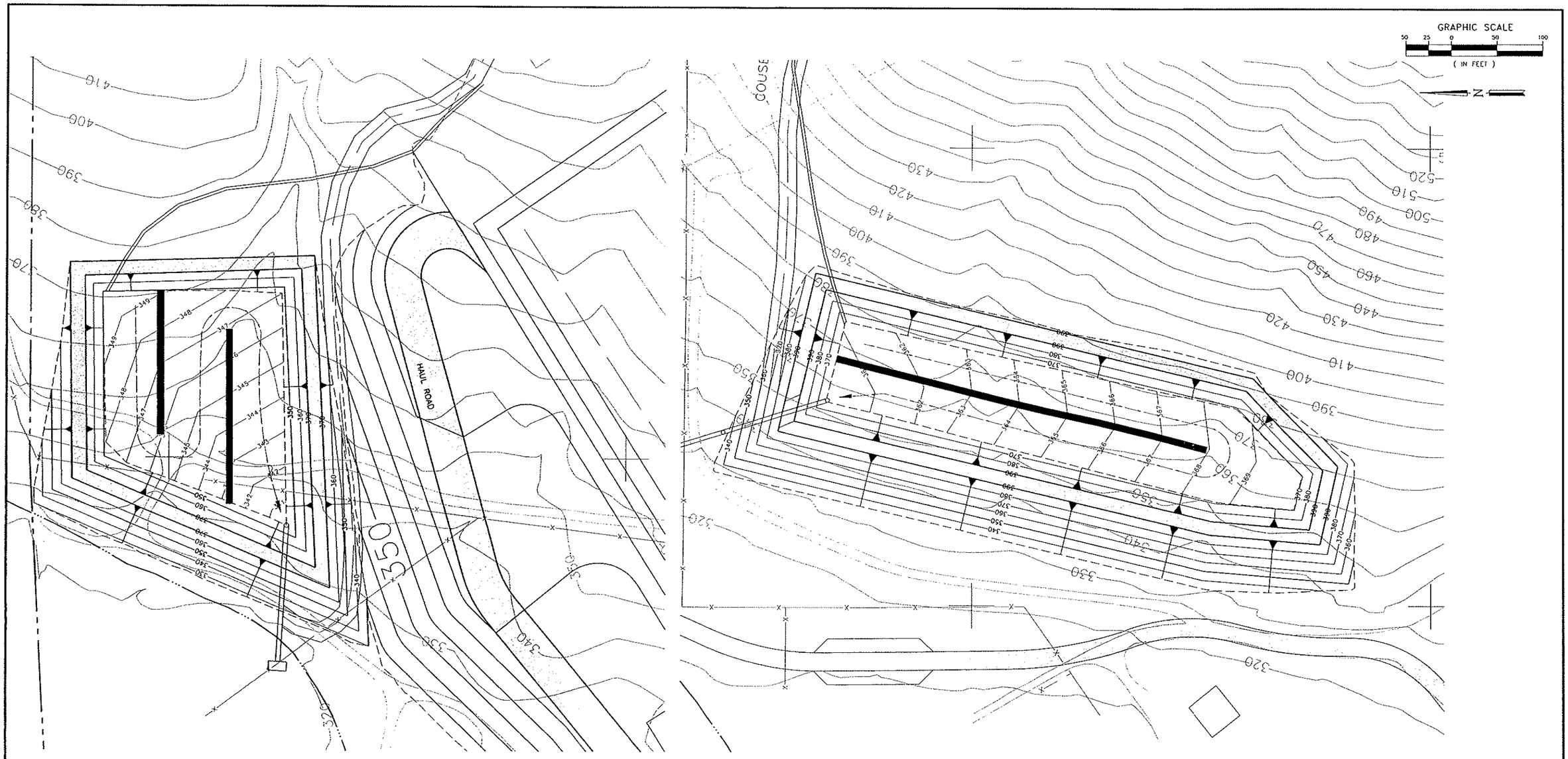

PRELIMINARY

LEGEND

- PROPERTY LINE
- LIMIT OF REFUSE/PHASE I EXCAVATION
- TOP/TOE OF SLOPE
- 900 — FINAL CONTOUR
- 950 — EXISTING CONTOUR
- ACCESS/HAUL ROAD

FIGURE 20

NO.	REVISION DESCRIPTION	BY:

BAS
BRYAN A. STIRRAT & ASSOCIATES
CONSULTING CIVIL & ENVIRONMENTAL ENGINEERS
1360 E. VALLEY VISTA DRIVE
DIAMOND BAR, CALIFORNIA 91765
(909) 860-7777

GREGORY CANYON LANDFILL
DESILTING BASIN GRADING PLAN

DESIGNED BY : E.L.S.	SCALE : AS SHOWN	
DRAWN BY : M.T.B.	DATE : 11-1999	FILE NO.: 27498DB.DWG
CHECKED BY :	DATE :	DRAWING 26
APPROVED BY :	DATE :	

FOR PERMIT PURPOSES ONLY - NOT FOR CONSTRUCTION

BAS
(909) 860-7777
BRYAN A. STIRRAT & ASSOCIATES
CIVIL AND ENVIRONMENTAL ENGINEERS
1360 VALLEY VISTA DRIVE • DIAMOND BAR, CA 91765

JOB GREGORY CANYON LANDFILL
SHEET NO. 1 OF 1
CALCULATED BY CHM DATE 11/03/2004
CHECKED BY DATE
SCALE N.A.

WEST PSD (CHANNEL)

THE WESTERN TRAPEZOIDAL CHANNEL MUST BE DESIGNED TO CONVEY:

- 100-YEAR 24-HOUR PEAK RUNOFF = 147 CFS
- SIMULTANEOUS PIPE PASSES FLOW;
  - PIPE 1 = 90 CFS
  - PIPE 2 = 90 CFS
  - PIPE 6 = 1000 CFS (PIPE 6 IS IN THE PLANNING STAGES & MAY NOT EVER REACH FULL CAPACITY)

PIPES 1, 2 & 6 ARE ALL GRAVITY FLOW PIPES FROM LAKE SKINNER & THE FLOW IS REGULATED NOT TO EXCEED THE DESIGN CAPACITY.

THE MOST CRITICAL REACH FOR THE CHANNEL IS BETWEEN NODES 4.07 & 4.08 WHERE THE BASIC DIMENSIONS ARE:

$S = 0.0325$
$Z = 1$ $D = 5.5'$
$B = 4.0'$

THE STEADY STATE DEPTH DEPTH OF FLOW = 4.5'
∴ THE CHANNEL DEPTH SHOULD BE = 5.5'

THE STANDARD CHANNEL FOR THE PERIMETER WILL BE AS SHOWN ON FIGURE 19 DETAIL 1/20

THE ALLIGNMENT, SHOWN ON THE DEVELOPED HYDROLOGY PLAN, OF THE WATER EASEMENT SHOWS THAT THE FIRST REACH THAT THE POSSIBLE BURIED PIPES COULD REACH IS THAT OF 4.07 TO 4.08.

NOTE: FLOW INFORMATION PROVIDED BY METROPOLITAN WATER DISTRICT.

Project Description	Gregory Canyon Landfill
Worksheet	4.08 Q100 PIPES 1,2&6
Flow Element	Trapezoidal Channel
Method	Manning's Formula
Solve For	Channel Depth

Section Data	
Mannings Coefficient	0.013
Slope	0.032 ft/ft
	500
Depth	4.43 ft
Left Side Slope	1.00 H : V
Right Side Slope	1.00 H : V
Bottom Width	4.00 ft
Discharge	1,327. cfs
	00

Q_{100} @ 4.08 = 147 CFS

*Q_{PIPE} 1 = 90 CFS 2 = 90 CFS**6 = 1000 CFS

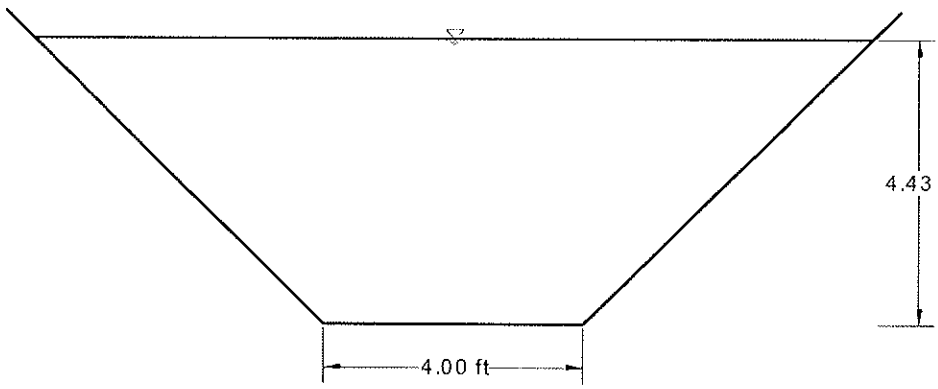

DETAIL (1/20)

D = 5.5'

1.0' FREEBOARD

V:1
H:1
NTS

* PIPES 1, 2 & 6 ARE GRAVITY FLOW PIPES WITH RESTRICTED FLOW & CAPACITY.

** PIPE 6 IS CURRENTLY IN PLANNING STAGES TO BE AT FULL CAPACITY (1000 CFS) IN 2020.

Project Description	Gregory Canyon Landfill
Worksheet	4.09 Q100 PIPES 1,2&6
Flow Element	Trapezoidal Channel
Method	Manning's Formula
Solve For	Channel Depth

Section Data	
Mannings Coefficient	0.013
Slope	0.220000 ft/ft
Depth	2.73 ft
Left Side Slope	1.00 H : V
Right Side Slope	1.00 H : V
Bottom Width	4.00 ft
Discharge	1,327.00 cfs

CALCULATED TO VERIFY CAPACITY

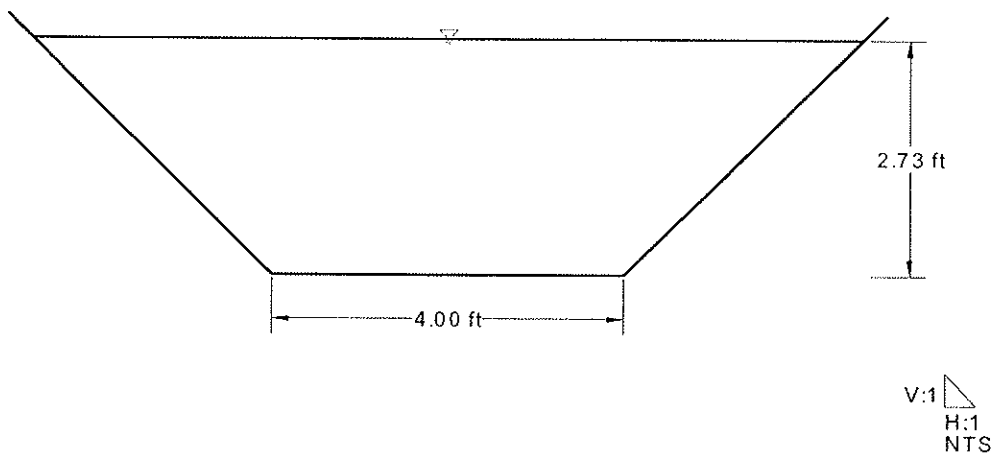

Project Description	Gregory Canyon Landfill
Worksheet	4.08 Q100 ← @ Node 4.08
Flow Element	Trapezoidal Channel
Method	Manning's Formula
Solve For	Channel Depth

Section Data		
Mannings Coefficient	0.013	
Slope	0.032	ft/ft
	500	
Depth	1.38	ft
Left Side Slope	1.00	H : V
Right Side Slope	1.00	H : V
Bottom Width	4.00	ft
Discharge	147.0	cfs
	0	

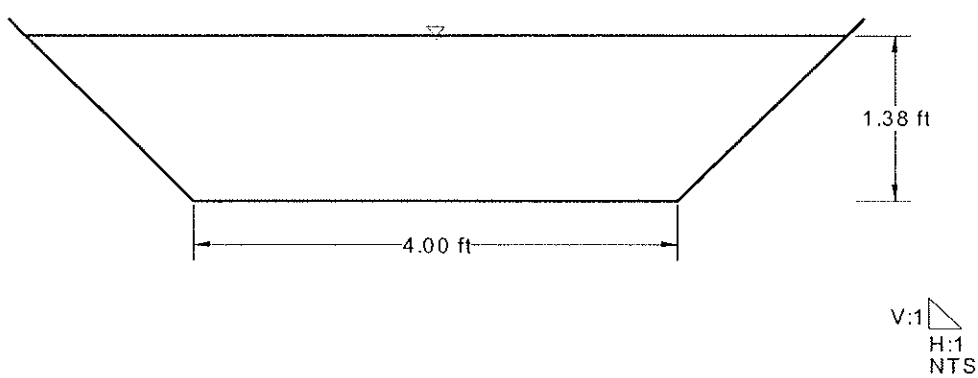

Project Description	Gregory Canyon Landfill
Worksheet	4.08 Max.
Flow Element	Trapezoidal Channel
Method	Manning's Formula
Solve For	Discharge

Section Data		
Mannings Coefficient	0.013	
Slope	0.032 500	ft/ft
Depth	5.00	ft
Left Side Slope	1.00	H : V
Right Side Slope	1.00	H : V
Bottom Width	4.00	ft
Discharge	1,699. 11	cfs

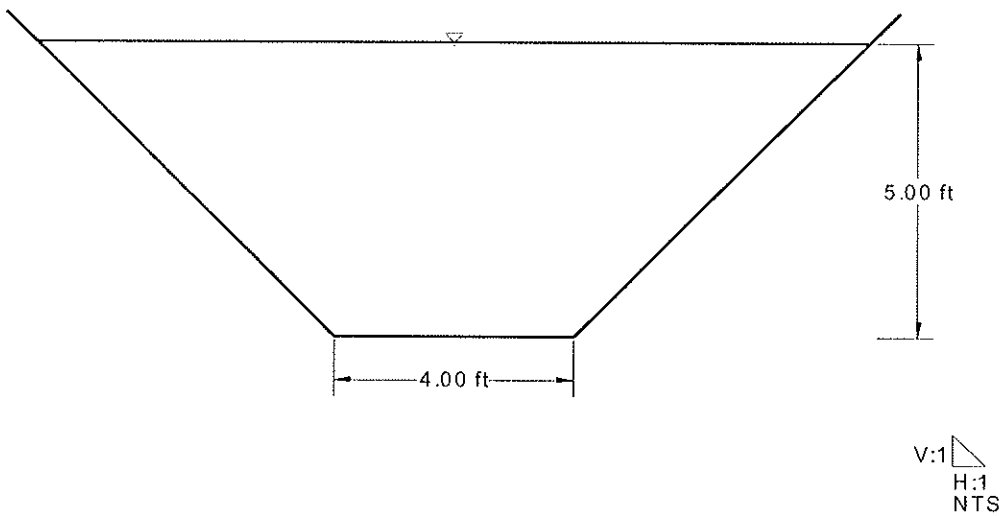

Project Description	Gregory Canyon Landfill
Worksheet	4.07 Q100
Flow Element	Trapezoidal Channel
Method	Manning's Formula
Solve For	Channel Depth

Section Data		
Mannings Coefficient	0.013	
Slope	0.004000	ft/ft
Depth	2.46	ft
Left Side Slope	1.00	H : V
Right Side Slope	1.00	H : V
Bottom Width	4.00	ft
Discharge	147.00	cfs

CALCULATED TO VERIFY CAPACITY AT THE MINIMUM GRADE FOR THE WESTERN TRAPEZOIDAL CHANNEL.

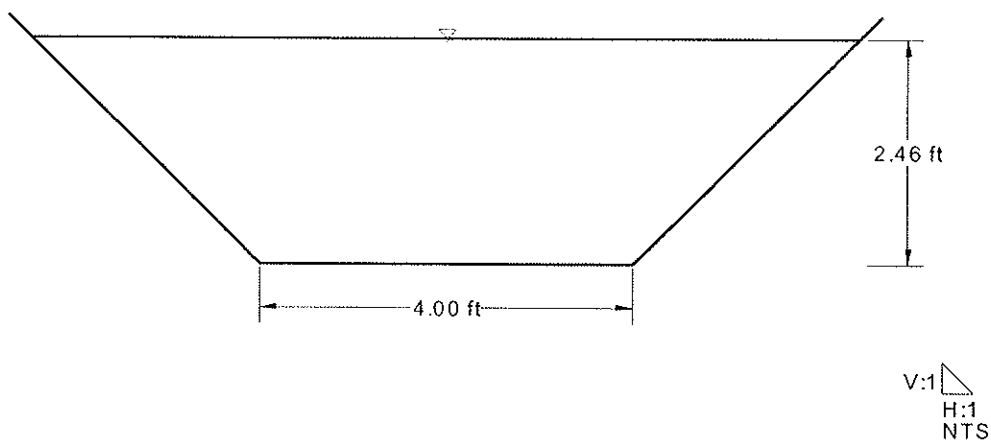

Project Description	Gregory Canyon Landfill
Worksheet	4.07 Max
Flow Element	Trapezoidal Channel
Method	Manning's Formula
Solve For	Discharge

Section Data		
Mannings Coefficient	0.013	
Slope	0.004000	ft/ft
Depth	5.00	ft
Left Side Slope	1.00	H : V
Right Side Slope	1.00	H : V
Bottom Width	4.00	ft
Discharge	596.09	cfs

CALCULATED TO VERIFY MAXIMUM CAPACITY

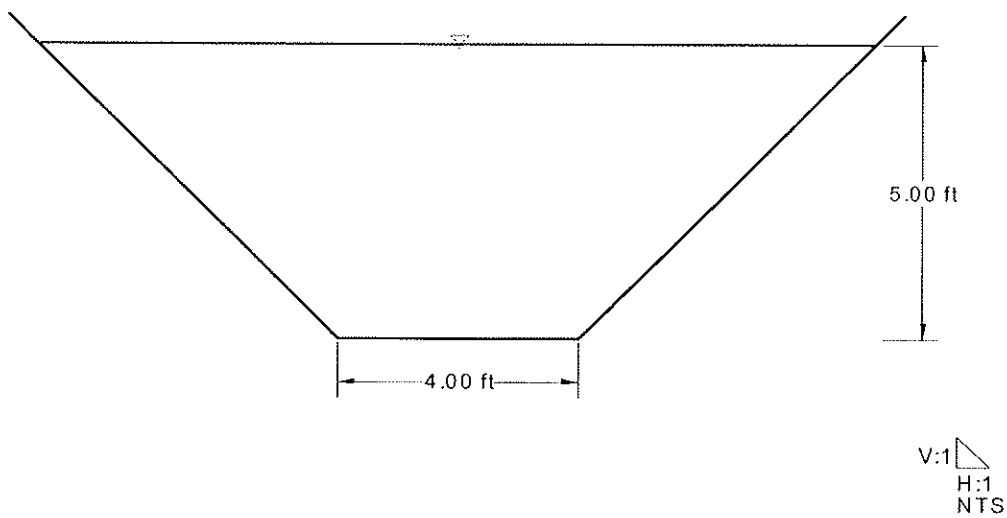

Project Description	Gregory Canyon Landfill
Worksheet	3.03
Flow Element	Circular Channel
Method	Manning's Formula
Solve For	Channel Depth

Section Data		
Mannings Coefficient	0.010	
Slope	0.330000	ft/ft
Depth	1.45	ft
Diameter	24	in
Discharge	148.00	cfs

CALCULATED TO VERIFY CAPACITY

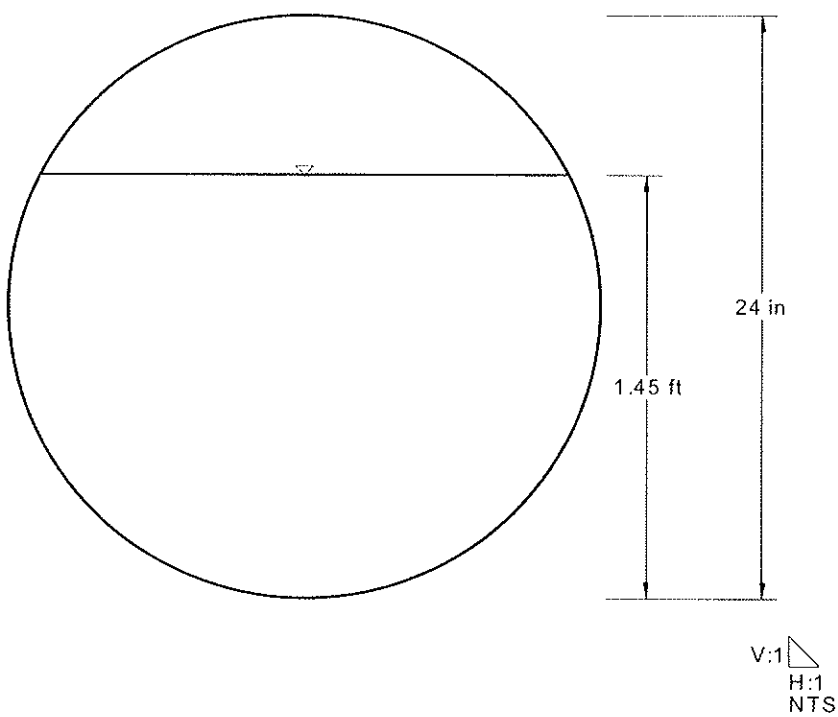

Project Description	Gregory Canyon Landfill
Worksheet	2.08
Flow Element	Circular Channel
Method	Manning's Formula
Solve For	Channel Depth

Section Data		
Mannings Coefficient	0.010	
Slope	0.200000	ft/ft
Depth	1.03	ft
Diameter	42	in
Discharge	110.00	cfs

CALCULATED TO VERIFY CAPACITY

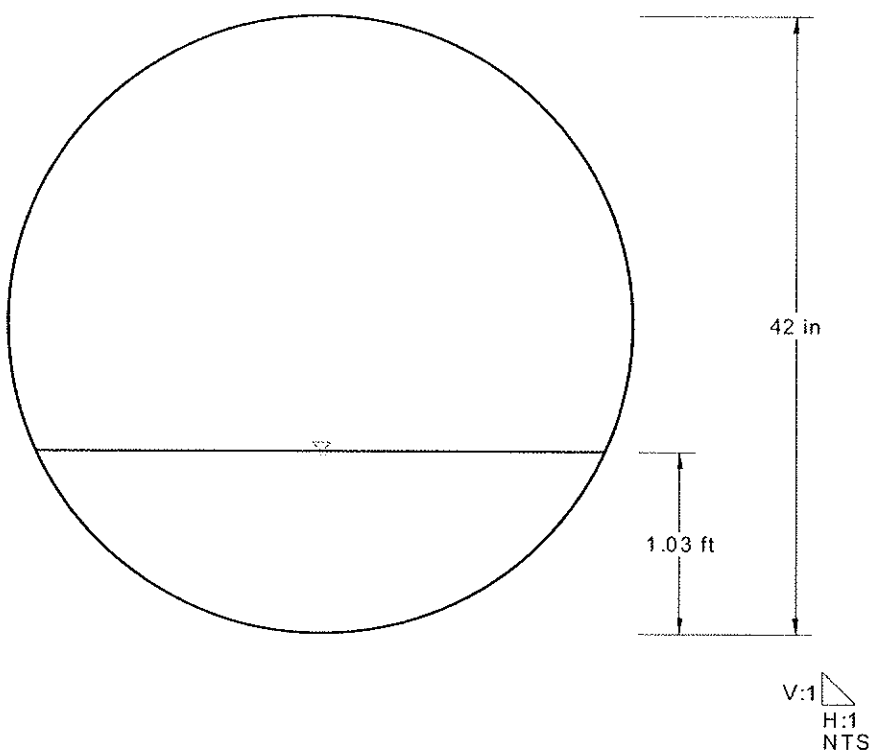

Project Description	Gregory Canyon Landfill
Worksheet	2.07
Flow Element	Circular Channel
Method	Manning's Formula
Solve For	Discharge

Section Data	
Mannings Coefficient	0.010
Slope	0.004000 ft/ft
Depth	3.50 ft
Diameter	42 in
Discharge	82.72 cfs
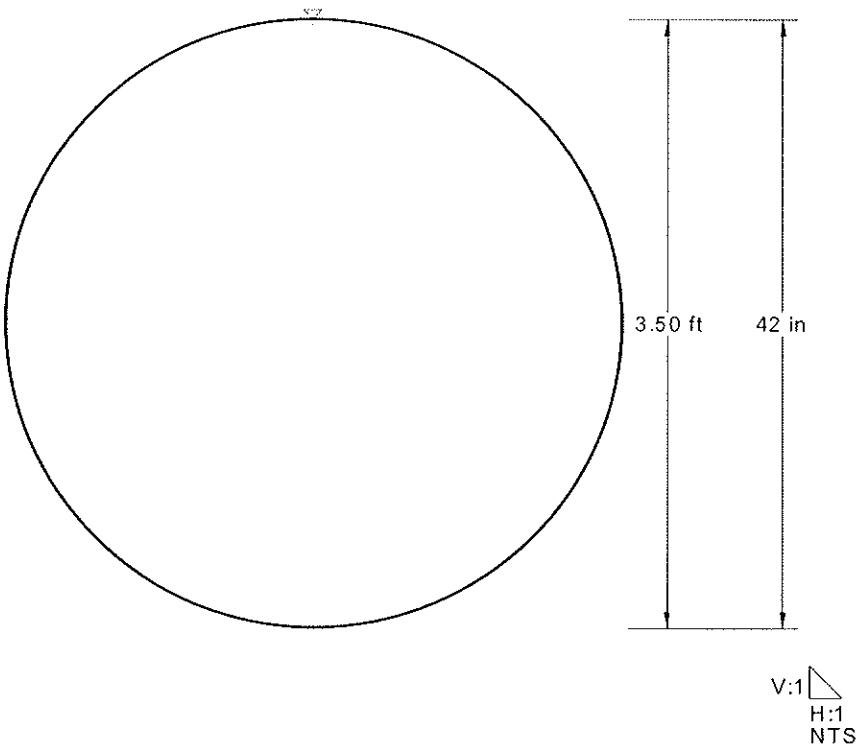
CALCULATED TO VERIFY MAXIMUM CAPACITY