CALIFORNIA REGIONAL WATER QUALITY CONTROL BOARD
SAN DIEGO REGION

2375 Northside Drive, Suite.100, San Diego, CA 92108
Phone (858) 467-2952 • Fax (858) 571-6972
http://www.waterboards.ca.gov/sandiego/

ORDER NO. R9-2013-0112
NPDES NO. CA0109347

Waste Discharge Requirements For The Marine Corps Base, Camp Pendleton, Southern Regional Tertiary Treatment Plant And Advanced Water Treatment Plant, Discharge To The Pacific Ocean Via The Oceanside Ocean Outfall

The following Discharger is subject to waste discharge requirements (WDRs) set forth in this Order:

Table 1. Discharger Information

Discharger	Marine Corps Base, Camp Pendleton
Name of Facility	Southern Regional Tertiary Treatment Plant
	Advanced Water Treatment Plant at Haybarn Canyon
Facility Address	Marine Corps Base
	Camp Pendleton, CA 92055
	San Diego County

Table 2. Discharge Location

Discharge Point	Effluent Description	Discharge Point Latitude (North)	Discharge Point Longitude (West)	Receiving Water
001	Secondary- and tertiary-treated wastewater and waste brine	33° 09' 46" N	117° 23' 28" W	Pacific Ocean

Table 3. Administrative Information

This Order was adopted on:	**November 13, 2013**
This Order shall become effective on:	**January 1, 2014**
This Order shall expire on:	**December 31, 2018**
The Discharger shall file a Report of Waste Discharge as an application for reissuance of WDR's in accordance with title 23, California Code of Regulations, and an application for reissuance of a National Pollutant Discharge Elimination System (NPDES) permit no later than:	**180 days prior to the Order expiration date**
The US Environmental Protection Agency (US EPA) and the California Regional Water Quality Control Board, San Diego Region have classified this discharge as follows:	**Major**

I, David W. Gibson, Executive Officer, do hereby certify that this Order with all attachments is a full, true, and correct copy of the Order adopted by the California Regional Water Quality Control Board, San Diego Region, on **November 13, 2013**.

David W. Gibson, Executive Officer

Contents

I. Facility Information 3
II. Findings 3
III. Discharge Prohibitions 4
IV. Effluent Limitations and Discharge Specifications 4
A. Effluent Limitations and Performance Goals – Discharge Point No. 001 4
1. Final Effluent Limitations – Discharge Point No. 001 4
2. Interim Effluent Limitations – Not Applicable 11
B. Land Discharge Specifications – Not Applicable 11
C. Recycling Specifications – Not Applicable 11
V. Receiving Water Limitations 11
A. Surface Water Limitation 11
1. Bacterial Characteristics 11
2. Physical Characteristics 12
3. Chemical Characteristics 12
4. Biological Characteristics 12
5. Radioactivity 13
B. Groundwater Limitations – Not Applicable 13
VI. Provisions 13
A. Standard Provisions 13
B. Monitoring and Reporting Program (MRP) Requirements 14
C. Special Provisions 14
1. Reopener Provisions 14
2. Special Studies, Technical Reports and Additional Monitoring Requirements 16
3. Best Management Practices and Pollution Prevention – Not Applicable 18
4. Construction, Operation and Maintenance Specifications – Not Applicable 18
5. Special Provisions for Wastewater Facilities 18
6. Other Special Provisions - Responsibilities, Liabilities, Legal Action, Penalties 21
7. Compliance Schedules – Not Applicable 21
VII. Compliance Determination 22

Tables

Table 1. Discharger Information 1
Table 2. Discharge Location 1
Table 3. Administrative Information 1
Table 4. Effluent Limitations at EFF-001 5
Table 5. Effluent Limitations Based on Secondary Treatment Requirements and Table 2 of the Ocean Plan at EFF-002 6
Table 6. Effluent Limitations Based on Table 2 of the Ocean Plan at EFF-003 6
Table 7. Performance Goals Based on the Ocean Plan 7

Attachments

Attachment A – Definitions A-1
Attachment B – Map B-1
Attachment C – Flow Schematics C-1
Attachment D – Standard Provisions D-1
Attachment E – Monitoring and Reporting Program E-1
Attachment F – Fact Sheet F-1
Attachment G – Ocean Plan and Basin Plan Prohibitions G-1
Attachment H – Sanitary Sewer System Requirements H-1

I. FACILITY INFORMATION

Information describing the Southern Regional Tertiary Treatment Plant (SRTTP) and Advanced Water Treatment Plant at Haybarn Canyon (AWT) is summarized in Table 1 and in sections I and II of the Fact Sheet (Attachment F). Section I of the Fact Sheet also includes information regarding the SRTTP and AWT's permit application.

II. FINDINGS

The California Regional Water Quality Control Board, San Diego Region (San Diego Water Board), finds:

A. Legal Authorities. This Order serves as WDRs pursuant to article 4, chapter 4, division 7 of the California Water Code (commencing with section 13260). This Order is also issued pursuant to section 402 of the federal Clean Water Act (CWA) and implementing regulations adopted by the US EPA and chapter 5.5, division 7 of the Water Code (commencing with section 13370). It shall serve as an NPDES permit for point source discharges from the facilities to surface waters.

B. Background and Rationale for Requirements. The San Diego Water Board developed the requirements in this Order based on information submitted as part of the application, through monitoring and reporting programs, and other available information. The Fact Sheet (Attachment F), which contains background information and rationale for the requirements in this Order, is hereby incorporated into and constitutes Findings for this Order. Attachments A through E, G, and H are also incorporated into this Order.

C. Provisions and Requirements Implementing State Law. The provisions/requirements in subsections IV.B, IV.C, V.B, VI.A.2, VI.C.1.b, and VI.C.1.c are included to implement state law only. These provisions/requirements are not required or authorized under the CWA; consequently, violations of these provisions/requirements are not subject to the enforcement remedies that are available for NPDES violations.

D. Notification of Interested Parties. The San Diego Water Board has notified the Discharger and interested agencies and persons of its intent to prescribe WDR's for the discharge and has provided them with an opportunity to submit their written comments and recommendations. Details of the notification are provided in the Fact Sheet.

E. Consideration of Public Comment. The San Diego Water Board, in a public meeting, heard and considered all comments pertaining to the discharge. Details of the Public Hearing are provided in the Fact Sheet.

THEREFORE, IT IS HEREBY ORDERED, that this Order supersedes Order No. R9-2008-0096, except for enforcement purposes, and, in order to meet the provisions contained in division 7 of the Water Code (commencing with section 13000) and regulations adopted thereunder, and the provisions of the CWA and regulations and guidelines adopted thereunder, the Discharger shall comply with the requirements in this Order. This action in no way prevents the San Diego Water Board from taking enforcement action for past violations of the previous Order.

III. DISCHARGE PROHIBITIONS

A. The discharge of waste from SRTTP and/or AWT to a location other than the Oceanside Ocean Outfall (Discharge Point No. 001), unless specifically regulated by this Order or separate WDRs to the extent permitted by federal law, is prohibited.

B. The Discharger must comply with Discharge Prohibitions contained in the Water Quality Control Plan for Ocean Waters of California, California Ocean Plan (Ocean Plan), incorporated into this Order as if fully set forth herein and summarized in Attachment G, as a condition of this Order.

C. The Discharger must comply with Discharge Prohibitions contained in Chapter 4 of the Water Quality Control Plan for the San Diego Region (Basin Plan), incorporated into this Order as if fully set forth herein and summarized in Attachment G, as a condition of this Order to the extent permitted by federal law.

IV. EFFLUENT LIMITATIONS AND DISCHARGE SPECIFICATIONS

A. Effluent Limitations and Performance Goals – Discharge Point No. 001

1. Final Effluent Limitations – Discharge Point No. 001

The Discharger shall maintain compliance with the following effluent limitations at Discharge Point No. 001, with compliance measured at Monitoring Locations EFF-001, EFF-002, and EFF-003, as described in the Attachment E of this Order, Monitoring and Reporting Program (MRP):

a. The Discharger shall maintain compliance with the following effluent limitations for the combined effluent from SRTTP and AWT at Monitoring Location EFF-001, as described in the MRP:

Table 4. Effluent Limitations at EFF-001

Parameter	Unit	Water Quality-Based Effluent Limitations[1]				
		Average Monthly	6-Month Median	Maximum Daily	Instantaneous Maximum	30-Day Average
Flow	MGD[2]	3.6				
BASED ON OBJECTIVES FOR PROTECTION OF MARINE AQUATIC LIFE						
Chronic Toxicity	TUc	--	--	88	--	--
Copper, Total Recoverable	µg/L	--	9.00E+01	8.82E+02	2.47E+03	--
	lb/day	--	2.70E+00	2.65E+01	7.40E+01	--
Total Residual Chlorine	µg/L	--	1.76E+02	7.04E+02	5.28E+03	--
	lb/day	--	5.28E+00	2.11E+01	1.59E+02	--
Endrin	µg/L	--	1.76E-01	3.52E-01	5.28E-01	--
	lb/day	--	5.28E-03	1.06E-02	1.59E-02	--
HCH	µg/L	--	3.52E-01	7.04E-01	1.06E+00	--
	lb/day	--	1.06E-02	2.11E-02	3.17E-02	--
OBJECTIVES FOR PROTECTION OF HUMAN HEALTH – CARCINOGENS						
Aldrin	µg/L	--	--	--	--	1.94E-03
	lb/day	--	--	--	--	5.81E-05
Beryllium	µg/L	--	--	--	--	2.90E+00
	lb/day	--	--	--	--	8.72E-02
Dieldrin	µg/L	--	--	--	--	3.52E-03
	lb/day	--	--	--	--	1.06E-04
Heptachlor	µg/L	--	--	--	--	4.40E-03
	lb/day	--	--	--	--	1.32E-04
Heptachlor Epoxide	µg/L	--	--	--	--	1.76E-03
	lb/day	--	--	--	--	5.28E-05
Hexachlorobenzene	µg/L	--	--	--	--	1.85E-02
	lb/day	--	--	--	--	5.55E-04
PAHs	µg/L	--	--	--	--	7.74E-01
	lb/day	--	--	--	--	2.33E-02
PCBs	µg/L	--	--	--	--	1.67E-03
	lb/day	--	--	--	--	5.02E-05
TCDD equivalents	µg/L	--	--	--	--	3.43E-07
	lb/day	--	--	--	--	1.03E-08
Toxaphene	µg/L	--	--	--	--	1.85E-02
	lb/day	--	--	--	--	5.55E-04

[1] Scientific "E" notation is used to express certain values. In scientific "E" notation, the number following the "E" indicates that position of the decimal point in the value. Negative numbers after the "E" indicate that the value is less than 1, and positive numbers after the "E" indicate that the value is greater than 1. In this notation, a value of 6.1E-02 represents 6.1×10^{-2} or 0.061, 6.1E+02 represents 6.1×10^{2} or 610, and 6.1E+00 represents 6.1×10^{0} or 6.1.

[2] Million gallons per day (MGD)

b. The Discharger shall maintain compliance with the following effluent limitations for SRTTP at Monitoring Location EFF-002, as described in the MRP:

Table 5. Effluent Limitations Based on Secondary Treatment Requirements and Table 2 of the Ocean Plan at EFF-002

Parameter	Unit	Effluent Limitations		
		Average Monthly	Average Weekly	Instantaneous Maximum
5-day biochemical oxygen demand @ 20°C (BOD_5)[1]	mg/L	30	45	
	lbs/day[3]	901	1351	
Total Suspended Solids (TSS)[1]	mg/L	30	45	--
	lbs/day[3]	901	1351	
Oil and Grease	mg/L	25	40	75
	lbs/day[3]	751	1201	2252
Settleable Solids	ml/L	1.0	1.5	3.0
Turbidity	NTU	75	100	225
pH	standard unit	--	--	[2]

[1] The average monthly percent removal of BOD_5 and TSS shall not be less than 85 percent.
[2] Within limit of 6.0 to 9.0 at all times.
[3] Mass limits were determined using a flow of 3.6 MGD and the following equation: lbs/day = permitted flow (MGD) x pollutant concentration (mg/L) x 8.34.

c. The Discharger shall maintain compliance with the following effluent limitations for the AWT at Monitoring Location EFF-003, as described in the MRP:

Table 6. Effluent Limitations Based on Table 2 of the Ocean Plan at EFF-003

Parameter	Unit	Effluent Limitations		
		Average Monthly	Average Weekly	Instantaneous Maximum
TSS	mg/L	60		
	lbs/day[1]	866		
Oil and Grease	mg/L	25	40	75
	lbs/day[1]	361	557	1082
Settleable Solids	ml/L	1.0	1.5	3.0
Turbidity	NTU	75	100	225
pH	standards unit			[2]

[1] Mass limits were determined using a flow of 1.73 MGD and the following equation: lbs/day = permitted flow (MGD) x pollutant concentration (mg/L) x 8.34.
[2] Within limit of 6.0 to 9.0 at all times.

d. Constituents that do not have reasonable potential or had inconclusive reasonable potential analysis results are referred to as performance goal constituents and assigned the performance goals listed in the following table. Performance goal constituents shall also be monitored at EFF-001, but the results will be used for informational purposes only, not compliance determination.

Table 7. Performance Goals Based on the Ocean Plan

Parameter	Unit	Performance Goals[1]			
		6-Month Median	Maximum Daily	Instantaneous Maximum	30-Day Average
BASED ON OBJECTIVES FOR PROTECTION OF MARINE AQUATIC LIFE					
Arsenic, Total Recoverable	µg/L	4.43E+02	2.56E+03	6.78E+03	--
	lb/day	1.33E+01	7.67E+01	2.04E+02	--
Cadmium, Total Recoverable	µg/L	8.80E+01	3.52E+02	8.80E+02	--
	lb/day	2.64E+00	1.06E+01	2.64E+01	--
Chromium VI, Total Recoverable[2]	µg/L	1.76E+02	7.04E+02	1.76E+03	--
	lb/day	5.28E+00	2.11E+01	5.28E+01	--
Lead, Total Recoverable	µg/L	1.76E+02	7.04E+02	1.76E+03	--
	lb/day	5.28E+00	2.11E+01	5.28E+01	--
Mercury, Total Recoverable	µg/L	3.48E+00	1.40E+01	3.52E+01	--
	lb/day	1.04E-01	4.21E-01	1.06E+00	--
Nickel, Total Recoverable	µg/L	4.40E+02	1.76E+03	4.40E+03	--
	lb/day	1.32E+01	5.28E+01	1.32E+02	--
Selenium, Total Recoverable	µg/L	1.32E+03	5.28E+03	1.32E+04	--
	lb/day	3.96E+01	1.59E+02	3.96E+02	--
Silver, Total Recoverable	µg/L	4.77E+01	2.32E+02	6.02E+02	--
	lb/day	1.43E+00	6.98E+00	1.81E+01	--
Zinc, Total Recoverable	µg/L	1.06E+03	6.34E+03	1.69E+04	--
	lb/day	3.19E+01	1.90E+02	5.08E+02	--
Cyanide, Total Recoverable[3]	µg/L	8.80E+01	3.52E+02	8.80E+02	--
	lb/day	2.64E+00	1.06E+01	2.64E+01	--
Ammonia (expressed as nitrogen)	µg/L	5.28E+04	2.11E+05	5.28E+05	--
	lb/day	1.59E+03	6.34E+03	1.59E+04	--
Acute Toxicity	TUa	--	2.91	--	--
Phenolic Compounds (non-chlorinated)	µg/L	2.64E+03	1.06E+04	2.64E+04	--
	lb/day	7.93E+01	3.17E+02	7.93E+02	--
Chlorinated Phenolics	µg/L	8.80E+01	3.52E+02	8.80E+02	--
	lb/day	2.64E+00	1.06E+01	2.64E+01	--
Endosulfan	µg/L	7.92E-01	1.58E+00	2.38E+00	--
	lb/day	2.38E-02	4.76E-02	7.13E-02	--
Radioactivity	pci/l	Not to exceed limits specified in Title 17, Division 1, Chapter 5, Subchapter 4, Group 3, Article 3, section 30253 of the California Code of Regulations, Reference to section 30253 is prospective, including future changes to any incorporated provisions of federal law, as the changes take effect.			

Parameter	Unit	Performance Goals[1]			
		6-Month Median	Maximum Daily	Instantaneous Maximum	30-Day Average
OBJECTIVES FOR PROTECTION OF HUMAN HEALTH – NONCARCINOGENS					
Acrolein	µg/L	--	--	--	1.94E+04
	lb/day	--	--	--	5.81E+02
Antimony	µg/L	--	--	--	1.06E+05
	lb/day	--	--	--	3.17E+03
Bis(2-chloroethoxy) Methane	µg/L	--	--	--	3.87E+02
	lb/day	--	--	--	1.16E+01
Bis(2-chloroisopropyl) Ether	µg/L	--	--	--	1.06E+05
	lb/day	--	--	--	3.17E+03
Chlorobenzene	µg/L	--	--	--	5.02E+04
	lb/day	--	--	--	1.51E+03
Chromium (III), Total Recoverable	µg/L	--	--	--	1.67E+07
	lb/day	--	--	--	5.02E+05
Di-n-butyl Phthalate	µg/L	--	--	--	3.08E+05
	lb/day	--	--	--	9.25E+03
Dichlorobenzenes	µg/L	--	--	--	4.49E+05
	lb/day	--	--	--	1.35E+04
Diethyl Phthalate	µg/L	--	--	--	2.90E+06
	lb/day	--	--	--	8.72E+04
Dimethyl Phthalate	µg/L	--	--	--	7.22E+07
	lb/day	--	--	--	2.17E+06
4,6-dinitro-2-methylphenol	µg/L	--	--	--	1.94E+04
	lb/day	--	--	--	5.81E+02
2,4-dinitrophenol	µg/L	--	--	--	3.52E+02
	lb/day	--	--	--	1.06E+01
Ethylbenzene	µg/L	--	--	--	3.61E+05
	lb/day	--	--	--	1.08E+04
Fluoranthene	µg/L	--	--	--	1.32E+03
	lb/day	--	--	--	3.96E+01
Hexachlorocyclopentadiene	µg/L	--	--	--	5.10E+03
	lb/day	--	--	--	1.53E+02
Nitrobenzene	µg/L	--	--	--	4.31E+02
	lb/day	--	--	--	1.29E+01
Thallium, Total Recoverable	µg/L	--	--	--	1.76E+02
	lb/day	--	--	--	5.28E+00
Toluene	µg/L	--	--	--	7.48E+06
	lb/day	--	--	--	2.25E+05

Parameter	Unit	Performance Goals[1]			
		6-Month Median	Maximum Daily	Instantaneous Maximum	30-Day Average
Tributyltin	µg/L	--	--	--	1.23E-01
	lb/day	--	--	--	3.70E-03
1,1,1-trichloroethane	µg/L	--	--	--	4.75E+07
	lb/day	--	--	--	1.43E+06
BASED ON OBJECTIVES FOR PROTECTION OF HUMAN HEALTH - CARCINOGENS					
Acrylonitrile	µg/L	--	--	--	8.80E+00
	lb/day	--	--	--	2.64E-01
Benzene	µg/L	--	--	--	5.19E+02
	lb/day	--	--	--	1.56E+01
Benzidine	µg/L	--	--	--	6.07E-03
	lb/day	--	--	--	1.82E-04
Bis(2-chloroethyl) Ether	µg/L	--	--	--	3.96E+00
	lb/day	--	--	--	1.19E-01
Bis(2-ethlyhexyl) Phthalate	µg/L	--	--	--	3.08E+02
	lb/day	--	--	--	9.25E+00
Carbon Tetrachloride	µg/L	--	--	--	7.92E+01
	lb/day	--	--	--	2.38E+00
Chlordane	µg/L	--	--	--	2.02E-03
	lb/day	--	--	--	6.08E-05
Chlorodibromomethane (aka Dibromochloromethane)	µg/L	--	--	--	7.57E+02
	lb/day	--	--	--	2.27E+01
Chloroform	µg/L	--	--	--	1.14E+04
	lb/day	--	--	--	3.43E+02
DDT	µg/L	--	--	--	1.50E-02
	lb/day	--	--	--	4.49E-04
1,4-dichlorobenzene	µg/L	--	--	--	1.58E+03
	lb/day	--	--	--	4.76E+01
3,3'-dichlorobenzidine	µg/L	--	--	--	7.13E-01
	lb/day	--	--	--	2.14E-02
1,2-dichloroethane	µg/L	--	--	--	2.46E+03
	lb/day	--	--	--	7.40E+01
1,1-dichloroethylene	µg/L	--	--	--	7.92E+01
	lb/day	--	--	--	2.38E+00
Dichlorobromomethane	µg/L	--	--	--	5.46E+02
	lb/day	--	--	--	1.64E+01
Dichloromethane (aka Methylene Chloride)	µg/L	--	--	--	3.96E+04
	lb/day	--	--	--	1.19E+03

Parameter	Unit	Performance Goals[1]			
		6-Month Median	Maximum Daily	Instantaneous Maximum	30-Day Average
1,3-dichloropropene (aka 1,3-Dichloropropylene)	µg/L	--	--	--	7.83E+02
	lb/day	--	--	--	2.35E+01
2,4-dinitrotoluene	µg/L	--	--	--	2.29E+02
	lb/day	--	--	--	6.87E+00
1,2-diphenylhydrazine	µg/L	--	--	--	1.41E+01
	lb/day	--	--	--	4.23E-01
Halomethanes	µg/L	--	--	--	1.14E+04
	lb/day	--	--	--	3.43E+02
Hexachlorobutadiene	µg/L	--	--	--	1.23E+03
	lb/day	--	--	--	3.70E+01
Hexachloroethane	µg/L	--	--	--	2.20E+02
	lb/day	--	--	--	6.61E+00
Isophorone	µg/L	--	--	--	6.42E+04
	lb/day	--	--	--	1.93E+03
N-nitrosodimethylamine	µg/L	--	--	--	6.42E+02
	lb/day	--	--	--	1.93E+01
N-nitrosodi-N-propylamine	µg/L	--	--	--	3.34E+01
	lb/day	--	--	--	1.00E+00
N-nitrosodiphenylamine	µg/L	--	--	--	2.20E+02
	lb/day	--	--	--	6.61E+00
1,1,2,2-tetrachloroethane	µg/L	--	--	--	2.02E+02
	lb/day	--	--	--	6.08E+00
Tetrachloroethylene (aka Tetrachloroethene)	µg/L	--	--	--	1.76E+02
	lb/day	--	--	--	5.28E+00
Trichloroethylene (aka Trichloroethene)	µg/L	--	--	--	2.38E+03
	lb/day	--	--	--	7.13E+01
1,1,2-trichloroethane	µg/L	--	--	--	8.27E+02
	lb/day	--	--	--	2.48E+01
2,4,6-trichlorophenol	µg/L	--	--	--	2.55E+01
	lb/day	--	--	--	7.66E-01
Vinyl Chloride	µg/L	--	--	--	3.17E+03
	lb/day	--	--	--	9.51E+01

[1] Scientific "E" notation is used to express certain values. In scientific "E" notation, the number following the "E" indicates that position of the decimal point in the value. Negative numbers after the "E" indicate that the value is less than 1, and positive numbers after the "E" indicate that the value is greater than 1. In this notation a value of 6.1E-02 represents 6.1×10^{-2} or 0.061, 6.1E+02 represents 6.1×10^{2} or 610, and 6.1E+00 represents 6.1×10^{0} or 6.1.

[2] Dischargers may, at their option, meet this limitation (or apply this performance goal) as a total chromium limitation (or performance goal).

[3] If a Discharger can demonstrate to the satisfaction of the San Diego Water Board (subject to USEPA approval) that an analytical method is available to reliably distinguish between strongly and weakly complexed cyanide, effluent limitations for cyanide may be met by (or performance goals may be evaluated with) the combined measurement of free cyanide,

simple alkali metals cyanides, and weakly complexed organometallic cyanide complexes. In order for the analytical method to be acceptable, the recovery of free cyanide from metal complexes must be comparable to that achieved by the approved method in 40 CFR Part 136, as revised May 14, 1999.

2. Interim Effluent Limitations – Not Applicable

B. Land Discharge Specifications – Not Applicable

C. Recycling Specifications – Not Applicable

V. RECEIVING WATER LIMITATIONS

A. Surface Water Limitation

The receiving water limitations set forth below for ocean waters are based on water quality objectives contained in the Basin Plan and Ocean Plan and are a required part of this Order. The discharge of waste shall not cause or contribute to violation of these limitations in the Pacific Ocean. Compliance with these limitations shall be determined from samples collected at stations representative of the area within the waste field where initial dilution is completed.

1. Bacterial Characteristics

a. Within a zone bounded by the shoreline and a distance of three nautical miles from the shoreline, including all kelp beds, the following bacterial objectives shall be maintained throughout the water column. The zone of initial dilution for the ocean outfall is excluded.

i. 30-day Geometric Mean – The following standards are based on the geometric mean of the five most recent samples from each site:

(a) Total coliform density shall not exceed 1,000 per 100 ml;

(b) Fecal coliform density shall not exceed 200 per 100 ml; and

(c) Enterococcus density shall not exceed 35 per 100 ml.

ii. Single Sample Maximum:

(a) Total coliform density shall not exceed 10,000 per 100 ml;

(b) Fecal coliform density shall not exceed 400 per 100 ml;

(c) Enterococcus density shall not exceed 104 per 100 ml; and

(d) Total coliform density shall not exceed 1,000 per 100 ml when the fecal coliform/total coliform ratio exceeds 0.1.

b. The Initial Dilution Zone for any wastewater outfall shall be excluded from designation as kelp beds for purposes of bacterial standards. Adventitious

assemblages of kelp plants on waste discharge structures (e.g., outfall pipes and diffusers) do not constitute kelp beds for purposes of bacterial standards.

c. At all areas where shellfish may be harvested for human consumption, as determined by the San Diego Water Board, the median total coliform density shall not exceed 70 per 100 ml throughout the water column, and not more than 10 percent of the samples shall exceed 230 per 100 ml.

2. Physical Characteristics

a. Floating particulates and grease and oils shall not be visible.

b. The discharge of waste shall not cause aesthetically undesirable discoloration of the ocean surface.

c. Natural light shall not be significantly reduced at any point outside the initial dilution zone as a result of the discharge of waste.

d. The rate of deposition of inert solids and the characteristics of inert solids in the ocean sediments shall not be changed such that benthic communities are degraded.

3. Chemical Characteristics

a. The dissolved oxygen concentration shall not at any time be depressed more than 10 percent from that which occurs naturally, as the result of the discharge of oxygen demanding waste materials.

b. The pH shall not be changed at any time more than 0.2 units from that which occurs naturally.

c. The dissolved sulfide concentration of waters in and near sediments shall not be significantly increased above that present under natural conditions.

d. The concentration of substances set forth in Chapter II, Table 1 of the Ocean Plan, shall not be increased in marine sediments to levels that would degrade indigenous biota.

e. The concentration of organic materials in marine sediments shall not be increased to levels that would degrade marine life.

f. Nutrient materials shall not cause objectionable aquatic growths or degrade indigenous biota.

4. Biological Characteristics

a. Marine communities, including vertebrate, invertebrate, and plant species, shall not be degraded.

b. The natural taste, odor, color of fish, shellfish, or other marine resources used for human consumption shall not be altered.

c. The concentration of organic materials in fish, shellfish, or other marine resources used for human consumption shall not bioaccumulate to levels that are harmful to human health.

5. Radioactivity

Discharge of radioactive waste shall not degrade marine life.

B. Groundwater Limitations – Not Applicable

VI. PROVISIONS

A. Standard Provisions

1. The Discharger shall comply with all Standard Provisions included in Attachment D of this Order.

2. The Discharger shall comply with the following provisions. In the event that there is any conflict, duplication, or overlap between provisions specified by this Order, the more stringent provision shall apply:

a. The Facilities shall be supervised and operated by persons possessing certificates of appropriate grade pursuant to Title 23, Division 3, Chapter 26 of the California Code of Regulations (CCR). The Facilities shall be provided with a sufficient number of qualified personnel to operate the facility effectively so as to achieve the required level of treatment at all times.

b. All proposed new treatment facilities and expansions of existing treatment facilities shall be completely constructed and operable prior to initiation of the discharge from the new or expanded facilities. The Discharger shall submit a certification report for each new treatment facility, expansion of an existing treatment facility, and re-ratings. The certification report shall be prepared by the design engineer. For re-ratings, the certification report shall be prepared by the engineer who evaluated the treatment facility capacity. The certification report shall:

i. Identify the design capacity of the treatment facility, including the daily and 30-day design capacity;

ii. Certify the adequacy of each component of the treatment facility; and

iii. Contain a requirement-by-requirement analysis, based on acceptable engineering practices, of the process and physical design of the facility to ensure compliance with this Order.

iv. Contain the signature and engineering license number of the engineer preparing the certification report affixed to the report. If reasonable, the certification report shall be submitted prior to beginning construction. The Discharger shall not initiate a discharge from an existing treatment facility at a daily flow rate in excess of its previously approved design capacity until:

(a) The certification report is received by the San Diego Water Board;

(b) The San Diego Water Board has received written notification of completion of construction (new treatment facilities and expansions only);

(c) An inspection of the facility has been made by the San Diego Water Board or their designated representatives (new treatment facilities and expansions only); and

(d) The San Diego Water Board has provided the Discharger with written authorization to discharge at a daily flow rate in excess of its previously approved design capacity.

c. All waste treatment, containment, and disposal facilities shall be protected against 100-year peak stream flows as defined by the San Diego County flood control agency.

d. All waste treatment, containment, and disposal facilities shall be protected against erosion, overland runoff, and other impacts resulting from a 100-year, 24-hour storm event.

e. This Order expires on December 31, 2018, after which, the terms and conditions of this permit are automatically continued pending issuance of a new permit, provided that all requirements of USEPA's NPDES regulations at Title 40, Part 122.6 of the Code of Federal Regulations (CFR) and the State's regulations at Title 23, Division 3, Chapter 9, Article 3, section 2235.4 of the CCR regarding the continuation of expired permits and waste discharge requirements are met.

f. A copy of this Order shall be posted at a prominent location at or near the treatment and disposal facilities and shall be available to operating personnel at all times.

B. Monitoring and Reporting Program (MRP) Requirements

The Discharger shall comply with the MRP, Attachment E of this Order, and future revisions thereto.

C. Special Provisions

1. Reopener Provisions

a. This Order may be reopened for modification to include an effluent limitation if monitoring establishes that the discharge causes, has the reasonable potential to cause, or contributes to an excursion above an Ocean Plan Table 1 water quality objective. (40 CFR. Part 122.44(d)(1))

b. This Order may be reopened for modification of the monitoring and reporting requirements and/or special studies requirements, at the discretion of the San Diego Water Board. Such modification(s) may include, but is (are) not limited to, revision(s) (i) to implement recommendations from Southern California Coastal Water Research Project (SCCWRP), (ii) to develop, refine, implement, and/or coordinate a regional

monitoring program, (iii) to develop and implement improved monitoring and assessment programs in keeping with San Diego Water Board Resolution No. R9-2012-0069, *Resolution in Support of a Regional Monitoring Framework*, and/or (iv) to add provisions to require the Discharger to evaluate and provide information on cost and values of the monitoring and reporting program.

c. This Order may be modified, revoked and reissued, or terminated for cause including, but not limited to, the following:

   i. Violation of any terms or conditions of this Order. (Water Code section 13381(a))

   ii. Obtaining this Order by misrepresentation or failure to disclose fully all relevant fact. (Water Code section 13381(b))

   iii. A change in any condition that requires either a temporary or permanent reduction or elimination of the authorized discharge. (Water Code section 13381(c))

d. The filing of a request by the Discharger for modifications, revocation and reissuance, or termination of this Order does not stay any condition of this Order. Notification by the Discharger of planned operational or facility changes, or anticipated noncompliance with this Order does not stay any condition of this Order. (40 CFR Part 122.41(f))

e. If any applicable toxic effluent standard or prohibition (including any schedule of compliance specified in such effluent standard or prohibition) is promulgated under section 307(a) of the CWA for a toxic pollutant and that standard or prohibition is more stringent than any limitation on the pollutant in this Order, the San Diego Water Board may institute proceedings under these regulations to modify or revoke and reissue the Order to conform to the toxic effluent standard or prohibition. (40 CFR Part 122.4(b)(1))

f. This Order may be reopened and modified, in accordance with the provisions set forth in 40 CFR Parts 122 and 124.

g. This Order may be reopened and modified to revise effluent limitations as a result of future Basin Plan Amendments, or the adoption of a total maximum daily load (TMDL) for the receiving water. (40 CFR Part 122.62(a)(2))

h. This Order may be reopened upon submission by the Discharger of adequate information, as determined by this San Diego Water Board, to provide for dilution credits or a mixing zone, as may be appropriate. (40 CFR Part 122.62(a)(2))

i. This Order may be reopened and modified to revise the toxicity language once that language becomes standardized.

j. This Order may also be reopened and modified, revoked and, reissued or terminated in accordance with the provisions of 40 CFR Parts 122.44, 122.62 to 122.64, and 125.62. Causes for taking such actions include, but are not limited to, failure to comply with any condition of this Order and permit, and endangerment to human health or the environment resulting from the permitted activity.

2. Special Studies, Technical Reports and Additional Monitoring Requirements

a. **Spill Prevention and Response Plans**

i. For purposes of this section of the Order, a spill is a discharge of treated or untreated wastewater that occurs at or downstream of the SRTTP headworks, in violation of Discharge Prohibition III.A of this Order, or a discharge of other materials related to SRTTP or AWT. The term "spill" as used in this section of the Order does not include sanitary sewer overflows from the sewage collection system that are covered under Attachment H.

ii. The Discharger shall maintain a Spill Prevention Plan (SPP) and Spill Response Plan (SRP) for SRTTP and AWT in an up-to-date condition and shall amend the SPP/SRP whenever there is a change (e.g., in the design, construction, operation, or maintenance of the sewerage system or sewerage facilities) which materially affects the potential for spills and the response required for each potential spill. The Discharger shall review and amend the SPP/SRP as appropriate after each spill from SRTTP and AWT. The SPP/SRP and any amendments thereto shall be subject to the approval of the San Diego Water Board and shall be modified as directed by the San Diego Water Board. The Discharger shall submit the SPP/SRP and any amendments thereto to the San Diego Water Board upon request of the San Diego Water Board. The Discharger shall ensure that the up-to-date SPP/SRP is readily available to the SRTTP and AWT personnel at all times and that the SRTTP and AWT personnel are familiar with it.

b. Spill Reporting Requirements

The Discharger shall report spills, as defined in section VI.C.2.a.i above, in accordance with the following procedures:

i. If a spill results in a discharge of treated or untreated wastewater that is equal to or exceeds 1,000 gallons; and/or results in a discharge to a drainage channel and/or surface water; and/or results in a discharge to a storm drain that was not fully captured and returned to the sanitary sewer system, the Discharger shall:

(a) Report the spill to the San Diego Water Board by telephone, by voice mail, or by FAX within 24 hours from the time the Discharger becomes aware of the spill. The Discharger shall inform the San Diego Water Board of the date of the spill, spill location and its final destination, time the spill began and ended, estimated total spill volume, and type of spill material.

(b) Submit a written report, as well as any additional pertinent information, to the San Diego Water Board no later than 5 days from the time the Discharger becomes aware of the spill.

(c) The San Diego Water Board may waive the above-required written report under this provision on a case-by-case basis if an oral or faxed report has been received within 24 hours.

ii. If a spill results in a discharge of treated or untreated wastewater less than 1,000 gallons and the discharge does not reach a drainage channel, surface waters, or storm drain, the Discharger is not required to notify the San Diego Water Board within 24 hours, or provide a 5-day written report.

iii. For spills of material other than treated or untreated wastewater that cause, may cause, or are caused by significant operational failure, or endangers or may endanger human health or the environment, the Discharger shall notify the San Diego Water Board by telephone, by voice mail, or by FAX within 24 hours from the time the Discharger becomes aware of the spill. The Discharger shall inform the San Diego Water Board of the date of the spill, spill location and its final destination, time the spill began and ended, estimated total spill volume, and type of spill material.

iv. For all spills, the Discharger shall include a detailed summary of spills in the monthly self-monitoring report for the month in which the spill occurred. If no spills occurred during the calendar month, the Discharger shall report no spills in the monthly self-monitoring report for that calendar month.

v. The spill reporting requirements contained in this Order do not relieve the Discharger of responsibilities to report spills to other agencies, such as the California Emergency Management Agency (CalEMA) and the County of San Diego Department of Environmental Health Services.

c. Toxicity Reduction Evaluation (TRE)

The Discharger shall develop (or revise as necessary) a TRE workplan in accordance with TRE procedures established by USEPA in the following guidance manuals.

i. *Generalized Methodology for Conducting Industrial Toxicity Reduction Evaluations* (EPA/600/2-88/070).

ii. *Toxicity Identification Evaluation, Phase I* (EPA/600/6-91/005F).

iii. *Methods for Aquatic Toxicity Identification Evaluations, Phase II* (EPA/600/R-92/080).

iv. *Methods for Aquatic Toxicity Identification Evaluations, Phase III* (EPA/600/R-92/081).

The Discharger shall submit the TRE workplan to the San Diego Water Board within 180 days of the adoption of this Order. The TRE workplan shall be subject to the approval of the San Diego Water Board and shall be modified as directed by the San Diego Water Board.

d. Toxicity Reduction Requirements

If the effluent limitation for chronic toxicity or the performance goal for acute toxicity is exceeded in any one test, then within 15 days of the exceedance, the Discharger shall begin conducting six additional tests, bi-weekly, over a 12-week period.

If the toxicity effluent limitation / performance goal is exceeded in any of these six additional tests, then the Discharger shall notify the San Diego Water Board. If the San Diego Water Board determines that the discharge consistently exceeds an effluent limitation / performance goal, then the Discharger shall initiate a Toxicity Reduction Evaluation / Toxicity Identification Evaluation (TRE/TIE) in accordance with the TRE workplan required pursuant to section VI.C.2.c, and Toxicity Reduction Evaluation Guidance for Municipal Wastewater Treatment Plants (USEPA 833-B-99-002, 1999). Once the source of toxicity is identified, the Discharger shall take all reasonable steps to reduce the toxicity to meet the chronic toxicity effluent limitation and/or the acute toxicity performance goal identified in section IV.A of this Order.

Within 30 days of completion of the TRE/TIE, the Discharger shall submit the results of the TRE/TIE, including a summary of the findings, data generated, a list of corrective actions necessary to achieve consistent compliance with the toxicity effluent limitation/ performance goal of this Order and prevent recurrence of exceedances of the effluent limitation/ performance goal, and a time schedule for implementation of such corrective actions. The corrective actions and time schedule shall be modified at the direction of the San Diego Water Board.

If no toxicity is detected in any of these additional six tests, then the Discharger may return to the testing frequency specified in the MRP.

3. Best Management Practices and Pollution Prevention – Not Applicable

4. Construction, Operation and Maintenance Specifications – Not Applicable

5. Special Provisions for Wastewater Facilities

a. Treatment Plant Capacity

Four years prior to reaching the SRTTP design capacity, the Discharger shall submit a SRTTP Capacity report to the San Diego Water Board showing how flow volumes will be prevented from exceeding existing capacity or how capacity will be increased. A notification and copy of the report shall be sent to all appropriate Marine Corps Base Camp Pendleton personnel, local permitting agencies, if any, and the press.

b. Source Control Program Requirements

i. **Source Control Program**

The Discharger shall develop and implement a source control program to control the discharge of non-domestic pollutants to its sanitary sewer system and its treatment facilities. This source control program shall be implemented to prevent:

(a) The pass-through of pollutants or any interference with wastewater treatment plant operations from any pollutant, including BOD, excessive heat, oil and grease, metals, and organics that may result in the violation of discharge requirements (including effluent limitations) contained in this Order;

(b) Sludge contamination that interferes with the disposal of sludge in accordance with 40 CFR Part 503 and as specified in section VI.C.5.c below;

(c) The introduction of pollutants which could create a fire or explosion hazard in the sanitary sewer system or the treatment plant, including waste streams with a closed cup flashpoint of less than 140 degrees Fahrenheit (°F) using test methods specified in 40 CFR Part 261.21; and

(d) The introduction of pollutants which could cause corrosive structural damage, obstructions in flow, or the formation of toxic gases and fumes in a quantity that could cause acute worker health and safety problems.

ii. Annual Industrial Waste Survey

The Discharger shall conduct an annual Industrial Waste Survey (IWS) of all non-domestic facilities in the service area of the permitted treatment plant to determine whether any such facilities may be contributing to violations of the discharge requirements specified in the Order. As part of the IWS, the Discharger shall conduct an influent priority pollutant scan at the treatment plant. A copy of the annual IWS report shall be submitted to the San Diego Water Board by March 1, of each year.

Based on the results of the IWS, the San Diego Water Board may amend this Order to require non-domestic discharges adversely impacting the performance of the treatment plant be made subject to applicable provisions in the federal regulations which require the control of pollutant discharges using best available technology economically achievable (BAT) and best conventional pollutant control technology (BCT) to prevent and/or reduce pollutants.

iii. Domestic Discharger Source Control Program

The Discharger shall implement a domestic discharger Source Control Program consisting of a public education program designed to minimize the entrance of domestic toxic pollutants into the sanitary sewer system. Annually, the domestic source control program shall be reviewed and, if necessary, updated.

iv. Treatment Plant Influent Monitoring Program

The Discharger shall implement a treatment plant influent monitoring program as specified in Attachment E (MRP).

v. Special Requirements for Facilities Using Oil/Water Separators

All non-domestic facilities with the potential to discharge oil and other petroleum products, such as vehicle maintenance facilities, shall be equipped with an oil/water separator (OWS) to handle peak hydraulic loads and to reduce plant influent from containing free oil, or oil and grease at levels that will adversely impact the operation and maintenance of the treatment plant.

vi. Special Requirements for Facilities Discharging Silver

Best Management Practices (BMPs), such as the installation of silver recovery units shall be implemented to control the discharge of non-domestic waste containing silver.

vii. Special Requirements for Dining Facilities and Commercial Restaurants

BMPs, such as the installation and maintenance of grease traps, shall be implemented to control the discharge of non-domestic waste containing oil and grease.

c. Sludge (Biosolids) Disposal Requirements

i. The handling, treatment, use, management, and disposal of sludge and solids derived from wastewater treatment must comply with applicable provisions of section 405 of the CWA and USEPA regulations at 40 CFR Parts 257, 258, 501, and 503, including all monitoring, record keeping, and reporting requirements.

ii. Sludge and wastewater solids must be disposed of in a municipal solid waste landfill, reused by land application, disposed of in a sludge-only landfill, or used in an application approved by the San Diego Water Board in accordance with 40 CFR Parts 258 and 503 and Title 23, Chapter 15 of the CCR. If the Discharger desires to dispose of solids and/or sludge in a different manner, a request for permit modification must be submitted to the USEPA and to this San Diego Water Board at least 180 days prior to beginning the alternative means of disposal.

iii. Sludge that is disposed of in a municipal solid waste landfill must meet the requirements of 40 CFR Part 258 pertaining to providing information to the public. In the annual self-monitoring report, the Discharger shall include the amount of sludge placed in the landfill as well as the landfill to which it was sent.

iv. All requirements of 40 CFR Part 503 and Title 23, Chapter 15 of the CCR are enforceable whether or not the requirements of those regulations are stated in an NPDES permit or any other permit issued to the Discharger.

v. The Discharger shall take all reasonable steps to prevent and minimize any sludge use or disposal in violation of this Order that has a likelihood of adversely affecting human health or the environment.

vi. Solids and sludge treatment, storage, and disposal or reuse shall not create a nuisance, such as objectionable odors or flies, and shall not result in groundwater contamination.

vii. The solids and sludge treatment and storage site shall have adequate facilities to divert surface water runoff from adjacent areas to protect the boundaries of the site from erosion, and to prevent drainage from the treatment and storage site. Adequate protection is defined as protection, at the minimum, from a 100-year 24-hour storm event, 100-year peak stream flows as defined by the San Diego

County flood control agency, and protection from the highest possible tidal stage that may occur.

viii. The discharge of sewage sludge and solids shall not cause waste material to be in position where it is, or can be, conveyed from the treatment and storage sites and deposited in waters of the State.

ix. The Discharger shall submit an annual report to the USEPA and the San Diego Water Board containing monitoring results and pathogen and vector attraction reduction requirements, as specified by 40 CFR Part 503. The Discharger shall also report the quantity of screenings, sludge [biosolids], grit, and other solids generated and/or removed during wastewater treatment at SRTTP and the disposal method and location. This self-monitoring report shall be postmarked by February 19 of each year and report for the period of the previous calendar year.

d. Sanitary Sewer System Requirements

The Discharger shall comply with the monitoring and reporting requirements in Attachment E, Section IX.D, of this Order and with the sanitary sewer system requirements specified in Attachment H to this Order.

6. Other Special Provisions - Responsibilities, Liabilities, Legal Action, Penalties

The Porter-Cologne Water Quality Control Act provides for civil and criminal penalties comparable to, and in some cases greater than, those provided for under the Clean Water Act. [CWC 13385, 13387].

a. Nothing in this Order shall be construed to protect the Discharger from its liabilities under federal, state, or local laws.

b. Except as provided for in 40 CFR Part 122.41(m) and (n), nothing in this Order shall be construed to relieve the Discharger from civil or criminal penalties for noncompliance.

c. Nothing in this Order shall be construed to preclude the institution of any legal action or relieve the Discharger from any responsibilities, liabilities, or penalties to which the Discharger is or may be subject to under section 311 of the CWA.

d. Nothing in this Order shall be construed to preclude institution of any legal action or relieve the Discharger from any responsibilities, liabilities, or penalties established pursuant to any applicable state law or regulation under authoring preserved by section 510 of the CWA.

7. Compliance Schedules

<u>Prior to initiation of discharge from new or modified facilities or processes through the Oceanside OO during the term of this permit, the Discharger must evaluate the impact of such discharge on the bacterial characteristics receiving water limitations as contained in</u> Section V.A.1 of this permit. Within 30 days of completion of the evaluation, the Discharger shall submit the evaluation and results to the San Diego Water Board and to the City of Oceanside. If the San Diego Water Board, in consultation with the City of

Oceanside, determines that the new discharge would cause or contribute to violation of the bacterial characteristics in the receiving waters outside of the initial dilution zone of the Oceanside OO, the Discharger must submit a time schedule that outlines the tasks and approaches to achieve full compliance with the bacterial characteristics receiving water limitations standards. The time schedule shall include, but is not limited to: timelines for design, construction and implementation of any new or improved facilities needed for compliance.

VII. COMPLIANCE DETERMINATION

Compliance with the effluent limitations contained in section IV of this Order will be determined as specified below:

A. Compliance with Average Monthly Effluent Limitation (AMEL)

If the average of daily discharges over a calendar month exceeds the AMEL for a given parameter, an alleged violation will be flagged and the Discharger will be considered out of compliance for each day of that month for that parameter (e.g., resulting in 31 days of noncompliance in a 31-day month). The average of daily discharges over the calendar month that exceeds the AMEL for a parameter will be considered out of compliance for the month only. If only a single sample is taken during the calendar month and the analytical result for that sample exceeds the AMEL, the Discharger will be considered out of compliance for that calendar month. For any one calendar month during which no sample (daily discharge) is taken, no compliance determination can be made for that calendar month.

B. Compliance with Average Weekly Effluent Limitation (AWEL)

If the average of daily discharges over a calendar week (Sunday through Saturday) exceeds the AWEL for a given parameter, an alleged violation will be flagged and the Discharger will be considered out of compliance for each day of that week for that parameter, resulting in 7 days of noncompliance. The average of daily discharges over the calendar week that exceeds the AWEL for a parameter will be considered out of compliance for that week only. If only a single sample is taken during the calendar week and the analytical result for that sample exceeds the AWEL, the Discharger will be considered out of compliance for that calendar week. For any one calendar week during which no sample (daily discharge) is taken, no compliance determination can be made for that calendar week.

C. Compliance with Maximum Daily Effluent Limitation (MDEL)

The MDEL shall apply to flow weighted 24-hour composite samples, or grab, as specified in the MRP (Attachment E). If a daily discharge exceeds the MDEL for a given parameter, an alleged violation will be flagged and the Discharger will be considered out of compliance for that parameter for that one day only within the reporting period. For any one day during which no sample is taken, no compliance determination can be made for that day.

D. Compliance with Instantaneous Minimum Effluent Limitation

The instantaneous minimum effluent concentration limitation shall apply to grab sample determinations. If the analytical result of a single grab sample is lower than the instantaneous

minimum effluent limitation for a parameter, a violation will be flagged and the Discharger will be considered out of compliance for that parameter for that single sample. Non-compliance for each sample will be considered separately (e.g., the results of two grab samples taken within a calendar day that both are lower than the instantaneous minimum effluent limitation would result in two instances of noncompliance with the instantaneous minimum effluent limitation.)

E. Compliance with Instantaneous Maximum Effluent Limitation

The instantaneous maximum effluent concentration limitation shall apply to grab sample determinations. If the analytical result of a single grab sample is higher than the instantaneous maximum effluent limitation for a parameter, a violation will be flagged and the Discharger will be considered out of compliance for that parameter for that single sample. Non-compliance for each sample will be considered separately (e.g., the results of two grab samples taken within a calendar day that both exceed the instantaneous maximum effluent limitation would result in two instances of noncompliance with the instantaneous maximum effluent limitation).

F. Compliance with 6-Month Median Effluent Limitation

If the median of daily discharges over any 180-day period exceeds the 6-month median effluent limitation for a given parameter, an alleged violation will be flagged and the Discharger will be considered out of compliance for each day of that 180-day period for that parameter. The next assessment of compliance will occur after the next sample is taken. If only a single sample is taken during a given 180-day period and the analytical result for that sample exceeds the 6-month median, the Discharger will be considered out of compliance for the 180-day period. For any 180-day period during which no sample is taken, no compliance determination can be made for the 6-month median limitation.

G. Mass and Concentration Limitations

Compliance with mass and concentration effluent limitations for the same parameter shall be determined separately with their respective limitations. When the concentration of a constituent in an effluent sample is determined to be “Not Detected” (ND) or “Detectable but not quantifiable” (DNQ), the corresponding mass emission rate (MER) determined from that sample concentration shall also be reported as “ND” or “DNQ”.

H. Percent Removal

Compliance with percent removal requirements for average monthly percent removal of BOD_5 and TSS shall be determined separately for each wastewater treatment facility discharging through an outfall. For each wastewater treatment facility, the monthly average percent removal is the average of the calculated daily discharge percent removals only for days on which the constituent concentration is monitored in both the influent and effluent of the wastewater treatment facility at the locations specified in the MRP (Attachment E) within a calendar month.

The percent removal for each day shall be calculated according to the following equation:

$$\text{Daily discharge percent removal} = \frac{\textit{Influent concentration} - \textit{Effluent concentration}}{\textit{Influent concentration}} \times 100\%$$

I. Ocean Plan Provisions for Table 1 Constituents

Sufficient sampling and analysis shall be required to determine compliance with the effluent limitations.

1. Compliance with Single-constituent Effluent Limitations

The Discharger shall be deemed out of compliance with an effluent limitation or discharge specification if the concentration of the constituent in the monitoring sample is greater than the effluent limitation or discharge specification and greater than or equal to the Minimum Level (ML).

2. Compliance with Effluent Limitations Expressed as a Sum of Several Constituents

The Discharger is out of compliance with an effluent limitation that applies to the sum of a group of chemicals (e.g., PCBs) if the sum of the individual pollutant concentrations is greater than the effluent limitation. Individual pollutants of the group will be considered to have a concentration of zero if the constituent is reported as ND or DNQ.

3. Multiple Sample Data Reduction

The concentration of the pollutant in the effluent may be estimated from the result of a single sample analysis or by a measure of central tendency (arithmetic mean, geometric mean, median, etc.) of multiple sample analyses when all sample results are quantifiable (i.e., greater than or equal to the reported ML). When one or more sample results are reported as ND or DNQ, the central tendency concentration of the pollutant shall be the median (middle) value of the multiple samples. If, in an even number of samples, one or both of the middle values is ND or DNQ, the median will be the lower of the two middle values.

4. Mass Emission Rate (MER)

The MER, in pounds per day, shall be obtained from the following calculation for any calendar day:

Mass Emission Rate (lbs/day) = 8.34 x Q x C

In which Q and C are the flow rate in million gallons per day and the constituent concentration in mg/L, respectively, and 8.34 is a conversion factor (lbs/gallon of water). If a composite sample is taken, then C is the concentration measured in the composite sample and Q is the average flow rate occurring during the period over which the samples are composited.

J. Bacterial Standards and Analysis

1. The geometric mean used for determining compliance with bacterial standards is calculated with the following equation:

Geometric Mean = $(C_1 \times C_2 \times \ldots \times C_n)^{1/n}$

Where n is the number of days samples were collected during the period and C is the concentration of bacteria (CFU/100 mL) found on each day of sampling.

2. For all bacterial analyses, sample dilutions should be performed so the range of values extends from 2 to 16,000 CFU (colony-forming units). The detection methods used for each analysis shall be reported with the results of the analysis. Detection methods used for coliforms (total and fecal) shall be those listed in 40 CFR Part 136 or any improved method determined by the San Diego Water Board (and approved by USEPA) to be appropriate. Detection methods used for enterococcus shall be those presented in USEPA publication USEPA 600/4-85/076, *Test Methods for Escherichia coli and Enterococci in Water by Membrane Filter Procedure*, listed under 40 CFR Part 136, and any other method approved by the San Diego Water Board.

K. Single Operational Upset

A single operational upset (SOU) that leads to simultaneous violations or more than one pollutant parameter shall be treated as a single violation and limits the Discharger's liability in accordance with the following conditions:

1. A SOU is broadly defined as a single unusual event that temporarily disrupts the usually satisfactory operation of a system in such a way that it results in violation of multiple pollutant parameters.

2. A Discharger may assert SOU to limit liability only for those violations which the Discharger submitted notice of the upset as required in section I.H of Attachment D.

3. For purposes outside of Water Code sections 13385(h) and (i), determination of compliance and civil liability (including any more specific definition of SOU), the requirements for Dischargers to assert the SOU limitation of liability, and the manner of counting violations, shall be in accordance with the USEPA Memorandum "Issuance of Guidance Interpreting Single Operational Upset" (September 27, 1989).

4. For purposes of Water Code sections 13385(h) and (i), determination of compliance and civil liability (including any more specific definition of SOU), the requirements for Dischargers to assert the SOU limitation of liability, and the manner of counting violations shall be in accordance with Water Code section 13385(f)(2).

L. Chronic Toxicity

Chronic toxicity is used to measure the acceptability of waters for supporting a healthy marine biota until approved methods are developed to evaluate biological response. Compliance with the chronic toxicity effluent limitation, established in section IV.A.1 of this Order for Discharge Point No. 001, shall be determined using critical life stage toxicity tests in accordance with procedures prescribed by the Ocean Plan (2012) and restated in the MRP (Attachment E). Chronic toxicity shall be expressed as Toxic Units Chronic (TUc), where:

TUc = 100 / NOEL

NOEL is the No Observed Effect Level and is expressed as the maximum percent of effluent that causes no observable effect on a test organism, as determined by the result of a critical life stage toxicity test.

M. Acute Toxicity

Acute toxicity is used to measure the acceptability of waters for supporting a healthy marine biota until approved methods are developed to evaluate biological response. Compliance with the acute toxicity performance goal established in section IV.A.1 of this Order for Discharge Point No. 001 shall be determined using the following formula:

TUa (Toxic Units Acute) = 100 / 96-hr LC 50

where LC 50 (percent waste giving 50 percent survival of test organisms) shall be determined by static or continuous flow bioassay techniques using standard marine test species as specified in Appendix III of the 2012 Ocean Plan. If specific identifiable substances in wastewater can be demonstrated by the Discharger as being rapidly rendered harmless upon discharge to the marine environment, but not as a result of dilution, the LC 50 may be determined after the test samples are adjusted to remove the influence of those substances.

When it is not possible to measure the 96-hour LC 50 due to greater than 50 percent survival of the test species in 100 percent waste, the toxicity concentration shall be calculated by the expression:

TUa = (log[100 – S])/1.7

where S is the percent survival in 100 percent waste. If S is greater than 99, TUa shall be reported as zero.

ATTACHMENT A – DEFINITIONS

Acute Toxicity

a. Acute Toxicity (TUa)
Expressed in Toxic Units Acute (TUa) calculated by the expression:

$$TUa = \frac{100}{96\text{-hr LC 50}}$$

where:

LC 50 = Lethal Concentration 50% (see below)

When it is not possible to measure the 96-hour LC 50 due to greater than 50 percent survival of the test species in 100 percent waste, the toxicity concentration shall be calculated by the expression:

$$TUa = \frac{\log (100 - S)}{1.7}$$

where:

S = percentage survival in 100 percent waste. If S > 99, TUa shall be reported as zero.

b. Lethal Concentration 50% (LC 50)
LC 50 (percent waste giving 50 percent survival of test organisms) shall be determined by static or continuous flow bioassay techniques using standard marine test species as specified in Appendix III of the Ocean Plan. If specific identifiable substances in wastewater can be demonstrated by the discharger as being rapidly rendered harmless upon discharge to the marine environment, but not as a result of dilution, the LC 50 may be determined after the test samples are adjusted to remove the influence of those substances.

Areas of Special Biological Significance (ASBS)
Those areas designated by the State Water Resources Control Board (State Water Board) as ocean areas requiring protection of species or biological communities to the extent that alteration of natural water quality is undesirable. All ASBS are also classified as a subset of STATE WATER QUALITY PROTECTION AREAS.

Average Monthly Effluent Limitation (AMEL)
The highest allowable average of daily discharges over a calendar month, calculated as the sum of all daily discharges measured during a calendar month divided by the number of daily discharges measured during that month.

Average Weekly Effluent Limitation (AWEL)
The highest allowable average of daily discharges over a calendar week (Sunday through Saturday), calculated as the sum of all daily discharges measured during a calendar week divided by the number of daily discharges measured during that week.

Chlordane
Shall mean the sum of chlordane-alpha, chlordane-gamma, nonachlor-alpha, nonachlor-gamma, and oxychlordane. The sum shall include chlordene-alpha and chlordene-gamma when standards become available in the United States and when notified by the San Diego Water Board.

Chronic Toxicity
This parameter shall be used to measure the acceptability of waters for supporting a healthy marine biota until improved methods are developed to evaluate biological response.

a. Chronic Toxicity (TUc)
   Expressed as Toxic Units Chronic (TUc) calculated by the expression:

$$TUc = \frac{100}{NOEL}$$

   where:

   NOEL = No Observed Effect Level (see below)

b. No Observed Effect Level (NOEL)
   The NOEL is expressed as the maximum percent effluent or receiving water that causes no observable effect on a test organism, as determined by the result of a critical life stage toxicity test listed in Appendix III of the Ocean Plan.

Chlorinated phenolic compounds
The sum of 4-chloro-3-methylphenol, 2-chlorophenol, pentachlorophenol, 2,4,5-trichlorophenol, and 2,4,6-trichlorophenol.

Daily Discharge
Either: (1) the total mass of the constituent discharged over the calendar day (12:00 am through 11:59 pm) or any 24-hour period that reasonably represents a calendar day for purposes of sampling (as specified in the permit), for a constituent with limitations expressed in units of mass; or, (2) the unweighted arithmetic mean measurement of the constituent over the day for a constituent with limitations expressed in other units of measurement (e.g., concentration).

The daily discharge may be determined by the analytical results of a composite sample taken over the course of one day (a calendar day or other 24-hour period defined as a day) or by the arithmetic mean of analytical results from one or more grab samples taken over the course of the day.

For composite sampling, if 1 day is defined as a 24-hour period other than a calendar day, the analytical result for the 24-hour period will be considered as the result for the calendar day in which the 24-hour period ends.

DDT
The sum of 4,4’DDT, 2,4’DDT, 4,4’DDE, 2,4’DDE, 4,4’DDD, and 2,4’DDD.

Degrade
Degradation shall be determined by comparison of the waste field and reference site(s) for characteristic species diversity, population density, contamination, growth anomalies, debility, or supplanting of normal species by undesirable plant and animal species. Degradation occurs if there are significant differences in any of three major biotic groups, namely, demersal fish, benthic invertebrates, or attached algae. Other groups may be evaluated where benthic species are not affected, or are not the only ones affected.

Detected, but Not Quantified (DNQ)
Sample results that are less than the reported Minimum Level, but greater than or equal to the laboratory's MDL. Sample results reported as DNQ are estimated concentrations.

Dichlorobenzenes
The sum of 1,2- and 1,3-dichlorobenzene.

Downstream Ocean Waters
Waters downstream with respect to ocean currents.

Dredged Material
Any material excavated or dredged from the navigable waters of the United States, including material otherwise referred to as "spoil."

Enclosed Bays
Indentations along the coast that enclose an area of oceanic water within distinct headlands or harbor works. Enclosed bays include all bays where the narrowest distance between headlands or outermost harbor works is less than 75 percent of the greatest dimension of the enclosed portion of the bay. This definition includes but is not limited to: Humboldt Bay, Bodega Harbor, Tomales Bay, Drakes Estero, San Francisco Bay, Morro Bay, Los Angeles Harbor, Upper and Lower Newport Bay, Mission Bay, and San Diego Bay.

Endosulfan
The sum of endosulfan-alpha and -beta and endosulfan sulfate.

Estuaries and Coastal Lagoons
Waters at the mouths of streams that serve as mixing zones for fresh and ocean waters during a major portion of the year. Mouths of streams that are temporarily separated from the ocean by sandbars shall be considered as estuaries. Estuarine waters will generally be considered to extend from a bay or the open ocean to the upstream limit of tidal action but may be considered to extend seaward if significant mixing of fresh and salt water occurs in the open coastal waters. The waters described by this definition include but are not limited to the Sacramento-San Joaquin Delta as defined by section 12220 of the California Water Code, Suisun Bay, Carquinez Strait downstream to Carquinez Bridge, and appropriate areas of the Smith, Klamath, Mad, Eel, Noyo, and Russian Rivers.

Halomethanes
The sum of bromoform, bromomethane (methyl bromide) and chloromethane (methyl chloride).

HCH
The sum of the alpha, beta, gamma (lindane) and delta isomers of hexachlorocyclohexane.

Initial Dilution
The process that results in the rapid and irreversible turbulent mixing of wastewater with ocean water around the point of discharge.

For a submerged buoyant discharge, characteristic of most municipal and industrial wastes that are released from the submarine outfalls, the momentum of the discharge and its initial buoyancy act together to produce turbulent mixing. Initial dilution in this case is completed when the diluting wastewater ceases to rise in the water column and first begins to spread horizontally.

For shallow water submerged discharges, surface discharges, and non-buoyant discharges, characteristic of cooling water wastes and some individual discharges, turbulent mixing results primarily from the momentum of discharge. Initial dilution, in these cases, is considered to be completed when the momentum induced velocity of the discharge ceases to produce significant mixing of the waste, or the diluting plume reaches a fixed distance from the discharge to be specified by the San Diego Water Board, whichever results in the lower estimate for initial dilution.

Instantaneous Maximum Effluent Limitation
The highest allowable value for any single grab sample or aliquot (i.e., each grab sample or aliquot is independently compared to the instantaneous maximum limitation).

Instantaneous Minimum Effluent Limitation
The lowest allowable value for any single grab sample or aliquot (i.e., each grab sample or aliquot is independently compared to the instantaneous minimum limitation).

Kelp Beds
For purposes of the bacteriological standards of the Ocean Plan, marine areas that have significant aggregations of marine algae of the genera Macrocystis and Nereocystis. Kelp beds include the total foliage canopy of Macrocystis and Nereocystis plants throughout the water column.

Mariculture
The culture of plants and animals in marine waters independent of any pollution source.

Material
(a) In common usage: (1) the substance or substances of which a thing is made or composed (2) substantial; (b) For purposes of the Ocean Plan relating to waste disposal, dredging and the disposal of dredged material and fill, matter of any kind or description which is subject to regulation as waste, or any material dredged from the navigable waters of the United States. See also, DREDGED MATERIAL.

Maximum Daily Effluent Limitation (MDEL)
The highest allowable daily discharge of a pollutant.

Method Detection Limit (MDL)
The minimum concentration of a substance that can be measured and reported with 99 percent confidence that the analyte concentration is greater than zero, as defined in 40 CFR Part 136, Attachment B.

Minimum Level (ML)
The concentration at which the entire analytical system must give a recognizable signal and acceptable calibration point. The ML is the concentration in a sample that is equivalent to the concentration of the lowest calibration standard analyzed by a specific analytical procedure, assuming that all the method specified sample weights, volumes, and processing steps have been followed.

Natural Light
Reduction of natural light may be determined by the San Diego Water Board by measurement of light transmissivity or total irradiance, or both, according to the monitoring needs of the San Diego Water Board.

Not Detected (ND)
Those sample results less than the laboratory's MDL.

Ocean Waters
The territorial marine waters of the state as defined by California law to the extent these waters are outside of enclosed bays, estuaries, and coastal lagoons. If a discharge outside the territorial waters of the state could affect the quality of the waters of the state, the discharge may be regulated to assure no violation of the Ocean Plan will occur in ocean waters.

Polynuclear Aromatic Hydrocarbons (PAHs)
The sum of acenaphthylene, anthracene, 1,2-benzanthracene, 3,4-benzofluoranthene, benzo[k]fluoranthene, 1,12-benzoperylene, benzo[a]pyrene, chrysene, dibenzo[ah]anthracene, fluorene, indeno[1,2,3-cd]pyrene, phenanthrene and pyrene.

Polychlorinated Biphenyls (PCBs)
The sum of chlorinated biphenyls whose analytical characteristics resemble those of Aroclor-1016, Aroclor-1221, Aroclor-1232, Aroclor-1242, Aroclor-1248, Aroclor-1254 and Aroclor-1260.

Phenolic Compounds
The sum of 2,4-dimethylphenol, 4,6-Dinitro-2-methylphenol, 2,3-dinitrophenol, 2-methylphenol, 4-methylphenol, 2-nitropheneol, 4-nitrophenol, and phenol.

Reported Minimum Level (also known as the Reporting Level or RL)
The ML (and its associated analytical method) chosen by the Discharger for reporting and compliance determination from the MLs included in this Order, including an additional factor if applicable as discussed herein. The MLs included in this Order correspond to approved analytical methods for reporting a sample result that are selected by the San Diego Water Board either from Appendix II of the Ocean Plan in accordance with section III.C.5.a. of the Ocean Plan or established in accordance with section III.C.5.b. of the Ocean Plan. The ML is based on the proper application of method-based analytical procedures for sample preparation and the absence of any matrix interferences. Other factors may be applied to the ML depending on the specific sample preparation steps employed. For example, the treatment typically applied in cases where there are matrix-effects is to dilute the sample or sample aliquot by a factor of ten. In such cases, this additional factor must be applied to the ML in the computation of the reported ML.

Sanitary Sewer Overflow (SSO) Categories

1. Category 1 - All discharges of sewage resulting from a failure in the Discharger's sanitary sewer system that:

   A. Equal or exceed 1000 gallons, or

   B. Result in a discharge to a drainage channel and/or surface water; or

   C. Discharge to a storm drainpipe that was not fully captured and returned to the sanitary sewer system.
2. Category 2 – All other discharges of sewage resulting from a failure in the Discharger's sanitary sewer system.

3. Private Lateral Sewage Discharges – Sewage discharges that are caused by blockages or other problems within a privately owned lateral.

Shellfish
Organisms identified by the California Department of Health Services as shellfish for public health purposes (i.e., mussels, clams and oysters).

Significant Difference
A statistically significant difference in the means of two distributions of sampling results at the 95 percent confidence level.

Six-Month Median Effluent Limitation
The highest allowable moving median of all daily discharges for any 180-day period.

State Water Quality Protection Areas (SWQPAs)
Non-terrestrial marine or estuarine areas designated to protect marine species or biological communities from an undesirable alteration in natural water quality. All ASBS that were previously designated by the State Water Board in Resolution Nos. 74-28, 74-32, and 75-61 are now also classified as a subset of SWQPAs and require special protections afforded by the Ocean Plan.

TCDD Equivalents
The sum of the concentrations of chlorinated dibenzodioxins (2,3,7,8-CDDs) and chlorinated dibenzofurans (2,3,7,8-CDFs) multiplied by their respective toxicity factors, as shown in the table below.

Isomer Group	Toxicity Equivalence Factor
2,3,7,8-tetra CDD	1.0
2,3,7,8-penta CDD	0.5
2,3,7,8-hexa CDDs	0.1
2,3,7,8-hepta CDD	0.01
octa CDD	0.001
2,3,7,8 tetra CDF	0.1
1,2,3,7,8 penta CDF	0.05
2,3,4,7,8 penta CDF	0.5
2,3,7,8 hexa CDFs	0.1
2,3,7,8 hepta CDFs	0.01
octa CDF	0.001

Toxicity Identification Evaluation (TIE)
A set of procedures conducted to identify the specific chemical(s) responsible for toxicity. These procedures are performed in three phases (characterization, identification, and confirmation) using aquatic organism toxicity tests.)

Toxicity Reduction Evaluation (TRE)
A study conducted in a step-wise process designed to identify the causative agents of effluent or ambient toxicity, isolate the sources of toxicity, evaluate the effectiveness of toxicity control options, and then confirm the reduction in toxicity. The first steps of the TRE consist of the collection of data relevant to the toxicity, including additional toxicity testing, and an evaluation of facility operations and maintenance practices, and best management practices. A TIE may be required as part of the TRE, if appropriate.

Waste
As used in the Ocean Plan, waste includes a Discharger's total discharge, of whatever origin, i.e., gross, not net, discharge.

Water Recycling
The treatment of wastewater to render it suitable for reuse, the transportation of treated wastewater to the place of use, and the actual use of treated wastewater for a direct beneficial use or controlled use that would not otherwise occur.

Naval Weapons Station Fallbrook
5
Las Pulgas Rd
AWT @ Hayhurn
Oceanside
SRTTP
Carlsbad
Discharge Point 001

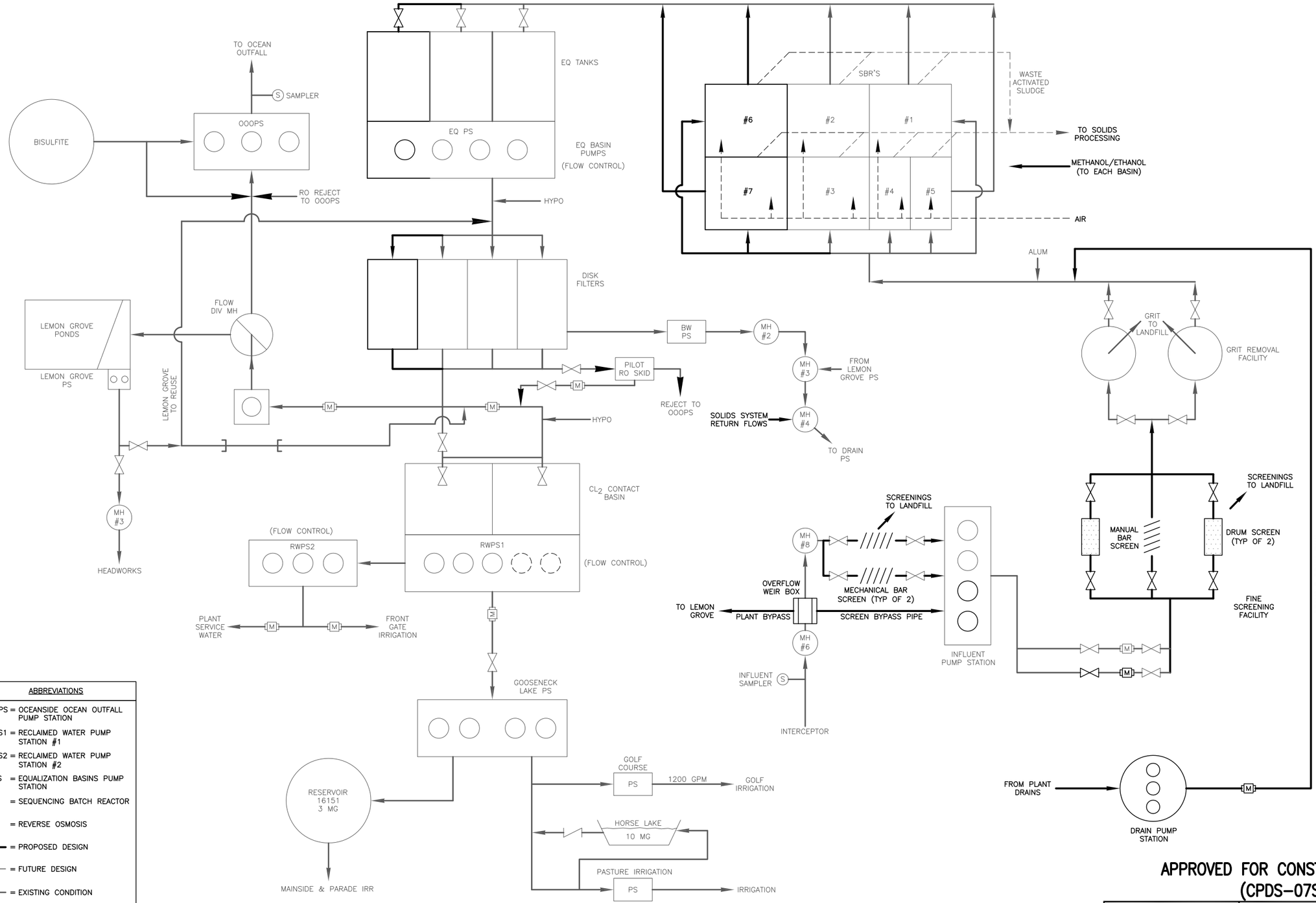

ABBREVIATIONS	
OOOPS	= OCEANSIDE OCEAN OUTFALL PUMP STATION
RWPS1	= RECLAIMED WATER PUMP STATION #1
RWPS2	= RECLAIMED WATER PUMP STATION #2
EQPS	= EQUALIZATION BASINS PUMP STATION
SBR	= SEQUENCING BATCH REACTOR
RO	= REVERSE OSMOSIS
▬▬	= PROPOSED DESIGN
– – –	= FUTURE DESIGN
———	= EXISTING CONDITION
⋈	= VALVE OR GATE

FOR MOTORIZED VALVES, SEE P&ID's

SOUTHERN REGIONAL TERTIARY TREATMENT PLANT LINE DIAGRAM

APPROVED FOR CONSTRUCTION (CPDS-07S/REV 0)

CDM FILANC
1925 Palomar Oaks Way, Suite 300
Carlsbad, California 92008
Tel: (760) 438-7755
Fax: (760) 438-7411

REV	DESCRIPTION
-	APPROVED FOR CONSTRUCTION (CPDS-07S/REV 0)

NAVFAC

REGISTERED PROFESSIONAL ENGINEER WILLIAM R. KOPACKA No. 49505 Exp. 9-30-12 CIVIL STATE OF CALIFORNIA

08/04/11 SEAL

SUBMITTED BY: JOHN M. PRICE DATE 08/04/11

APPROVED

ACTIVITY-SATISFACTORY TO DATE

APPROVED

FOR COMMANDER NAVFAC DATE

DES	DMH	DR	RKU
CHK	CAO	QC	JCT

DESIGNER OF RECORD WK O'NEIL C49505
REVIEWED BY JCT
QC JCT
PROJECT MANAGER JMP
FIRE PROTECTION

DEPARTMENT OF THE NAVY
NAVAL FACILITIES ENGINEERING COMMAND
SAN DIEGO, CALIFORNIA

SOUTHWEST DIVISION
P-1041 (SRTTP)
CRITICAL PATH DESIGN SUBMITTAL 07S
MARINE CORPS BASE CAMP PENDLETON
LIQUIDS PROCESS FLOW DIAGRAM

CODE ID. NO. 80091 SIZE D
SCALE: AS SHOWN
STA. DWG. NO.
STA. PROJ. NO.
SPEC. NO.
CONSTR. CONTR. NO. N62473-10-C-5011
NAVFAC DRAWING NO.
SHEET OF
00-G-07

DRAWFORM REVISION: 15 MARCH 2004

C:\pw_xt79474\ditchjs\dms53358\ P1041-CPDS7-00G-07 07/21/11 15:21 ditchjs XREFS: P1041-G-BS-CPDS7, WKO_Sig, WKONeil-rce, John Price

	P P	L P	C F	C FILTER PRODUCT	RO FEED	RO PERMEATE	BLENDED WATER	PRODUCT WATER	BLEND WATER	BRINE DISCHARGE	BRINE DISCHARGE (EMERGENC	BRINE DISCHARGE	BRINE FLUSH
STREAM ID	1	2	3	4	5	6	7	8	9	10	11	12	13
DESIGN FLOW – AVERAGE (GPM)	7200	7200	6000	6000	1500	4800	6000	6000	1200	1200	1200	1200	–
DESIGN FLOW – PEAK (GPM)	7930	7930	6610	6610	1320	5290	6610	6610	1320	1320	1320	1320	1200
DESIGN FLOW – PEAK FUTURE (GPM)	9000	9000	7500	7500	1500	6000	7500	7500	1500	1500	1500	1500	1500
PRESSURE (PSI) [4]	60	23	20	5	130	12	12	90	20	5	65	45	5
TOTAL DISSOLVED SOLIDS (TDS)[2] (MG/L)	1130	1130	1130	1130	1130	100	302	302	1130	5300	5300	5300	1130
TEMPERATURE (°C)	17	–	–	–	–	–	–	–	–	–	–	–	–
pH	7.3	7.3	7.3	7.3	7.3	6.8	7	7.3	7.3	8	6.5	6.5	7.3

NOTES:

1. RO TRAINS 1 AND 2 SECOND STAGE SHARE A SKID. RO TRAINS 3 AND 4 SECOND STAGE SHARE A SKID.
2. TDS REPORTED AS SUM OF THE IONS FOR AVG FLOW AND MAX CONCENTRATION.
3. PEAK FLOW BASED ON 15 CFS BLENDED PRODUCT WATER. REQUIRES 5 RO TRAINS ONLINE.
4. PRESSURE IS ESTIMATED BASED ON MAXIMUM PIPING AND EQUIPMENT HEADLOSS. RO FEED PRESSURE IS FOR 5 YR OLD MEMBRANES WITH 25% MARGIN.
5. RO PERMEATE AND BRINE FLOWS BASED ON 80% RECOVER.

CHEMICAL APPLICATIONS/ DISCHARGE:

- (A) SODIUM BISULFITE (SBF) @ 1.8 MG/L TO 5.8 MG/L
- (B) SBF @ 1.8 MG/L TO 5.8 MG/L
- (C) SULFURIC ACID (SA) @ 200 MG/L TO 400 MG/L
- (D) ANTISCALANT FEED (ASC) @ 1 MG/L TO 4 MG/L
- (E) SODIUM HYPOCHLORITE (HYPO) @ 1.5 MG/L
- (F) ORTHOPHOSHATE (PO4) @ 0.3 MG/L TO 3 MG/L
- (G) CAUSTIC SODA (NaOH) @ 18 MG/L TO 45 MG/L
- (H) RO CIP CHEMICALS INCLUDE NaOH AND CITRIC ACID (CA). DOSES TO BE PROVIDED BY SKID VENDOR.
- (S#) SAMPLING PORTS

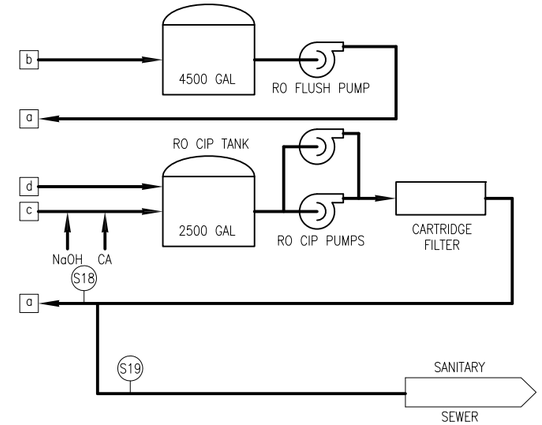

RO CLEANING SYSTEM

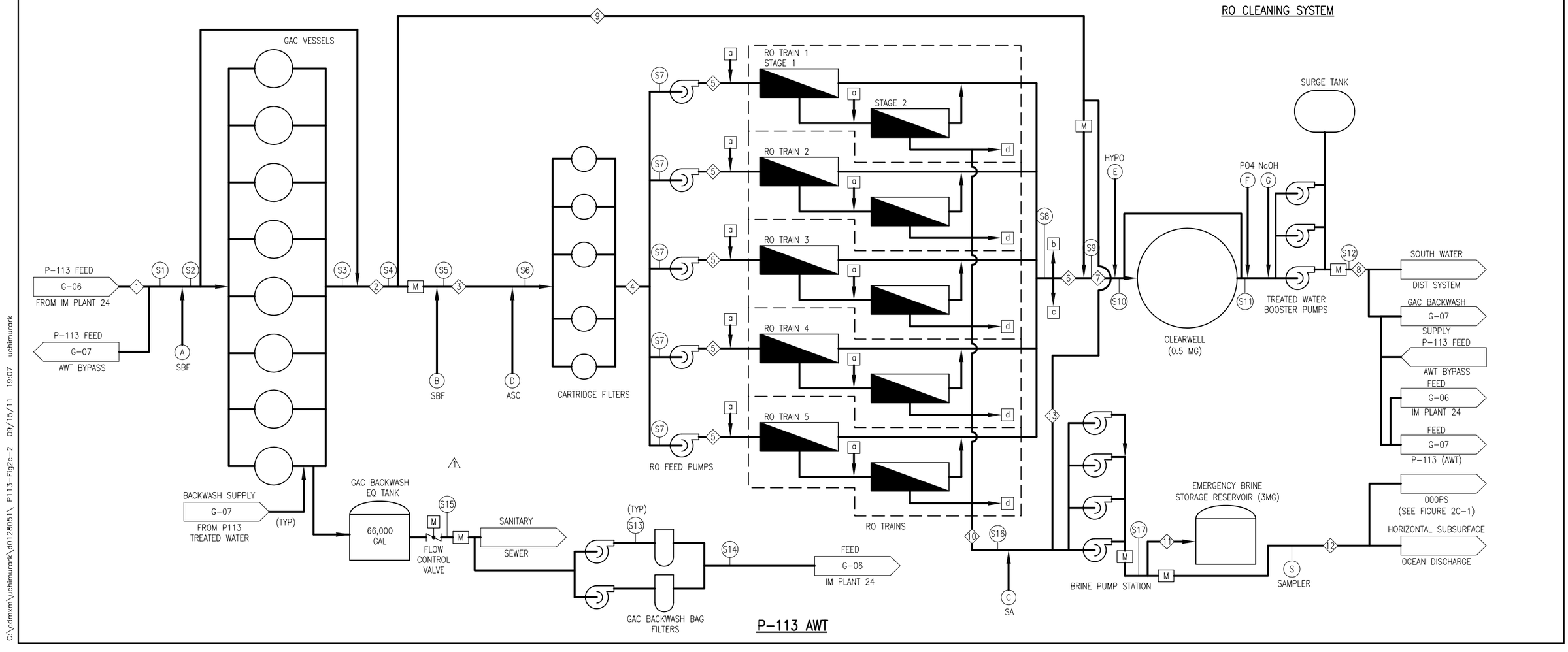

ADAVANCED WATER TREATMENT PLANT LINE DIAGRAM

C:\cdmxm\uchimurark\d0128051\ P113-Fig2c-2 09/15/11 19:07 uchimurark

ATTACHMENT D – STANDARD PROVISIONS

I. STANDARD PROVISIONS – PERMIT COMPLIANCE

A. Duty to Comply

1. The Discharger must comply with all of the conditions of this Order. Any noncompliance constitutes a violation of the Clean Water Act (CWA) and the California Water Code and is grounds for enforcement action, for permit termination, revocation and reissuance, or modification; or denial of a permit renewal application. (40 CFR Part 122.41(a).)

2. The Discharger shall comply with effluent standards or prohibitions established under section 307(a) of the CWA for toxic pollutants and with standards for sewage sludge use or disposal established under section 405(d) of the CWA within the time provided in the regulations that establish these standards or prohibitions, even if this Order has not yet been modified to incorporate the requirement. (40 CFR Part 122.41(a)(1).)

B. Need to Halt or Reduce Activity Not a Defense

It shall not be a defense for a Discharger in an enforcement action that it would have been necessary to halt or reduce the permitted activity in order to maintain compliance with the conditions of this Order. (40 CFR Part 122.41(c).)

C. Duty to Mitigate

The Discharger shall take all reasonable steps to minimize or prevent any discharge or sludge use or disposal in violation of this Order that has a reasonable likelihood of adversely affecting human health or the environment. (40 CFR Part 122.41(d).)

D. Proper Operation and Maintenance

The Discharger shall at all times properly operate and maintain all facilities and systems of treatment and control (and related appurtenances) which are installed or used by the Discharger to achieve compliance with the conditions of this Order. Proper operation and maintenance also includes adequate laboratory controls and appropriate quality assurance procedures. This provision requires the operation of backup or auxiliary facilities or similar systems that are installed by a Discharger only when necessary to achieve compliance with the conditions of this Order. (40 CFR Part 122.41(e).)

E. Property Rights

1. This Order does not convey any property rights of any sort or any exclusive privileges. (40 CFR Part 122.41(g).)

2. The issuance of this Order does not authorize any injury to persons or property or invasion of other private rights, or any infringement of state or local law or regulations. (40 CFR Part 122.5(c).)

F. Inspection and Entry

The Discharger shall allow the San Diego Water Board, State Water Board, USEPA, and/or their authorized representatives (including an authorized contractor acting as their representative), upon the presentation of credentials and other documents, as may be required by law, to (40 CFR Part 122.41(i); Water Code section 13383):

1. Enter upon the Discharger's premises where a regulated facility or activity is located or conducted, or where records are kept under the conditions of this Order (40 CFR Part 122.41(i)(1));

2. Have access to and copy, at reasonable times, any records that must be kept under the conditions of this Order (40 CFR Part 122.41(i)(2));

3. Inspect and photograph, at reasonable times, any facilities, equipment (including monitoring and control equipment), practices, or operations regulated or required under this Order (40 CFR Part 122.41(i)(3)); and

4. Sample or monitor, at reasonable times, for the purposes of assuring Order compliance or as otherwise authorized by the CWA or the Water Code, any substances or parameters at any location. (40 CFR Part 122.41(i)(4).)

G. Bypass

1. Definitions

a. "Bypass" means the intentional diversion of waste streams from any portion of a treatment facility. (40 CFR Part 122.41(m)(1)(i).)

b. "Severe property damage" means substantial physical damage to property, damage to the treatment facilities, which causes them to become inoperable, or substantial and permanent loss of natural resources that can reasonably be expected to occur in the absence of a bypass. Severe property damage does not mean economic loss caused by delays in production. (40 CFR Part 122.41(m)(1)(ii).)

2. Bypass not exceeding limitations. The Discharger may allow any bypass to occur which does not cause exceedances of effluent limitations, but only if it is for essential maintenance to assure efficient operation. These bypasses are not subject to the provisions listed in Standard Provisions – Permit Compliance I.G.3, I.G.4, and I.G.5 below. (40 CFR Part 122.41(m)(2).)

3. Prohibition of bypass. Bypass is prohibited, and the San Diego Water Board may take enforcement action against a Discharger for bypass, unless (40 CFR Part 122.41(m)(4)(i)):

a. Bypass was unavoidable to prevent loss of life, personal injury, or severe property damage (40 CFR Part 122.41(m)(4)(i)(A));

b. There were no feasible alternatives to the bypass, such as the use of auxiliary treatment facilities, retention of untreated wastes, or maintenance during normal periods of equipment downtime. This condition is not satisfied if adequate back-up equipment should have been installed in the exercise of reasonable engineering judgment to prevent a bypass that occurred during normal periods of equipment downtime or preventive maintenance (40 CFR Part 122.41(m)(4)(i)(B)); and

c. The Discharger submitted notice to the San Diego Water Board as required under Standard Provisions – Permit Compliance I.G.5 below. (40 CFR Part 122.41(m)(4)(i)(C).)

4. The San Diego Water Board may approve an anticipated bypass, after considering its adverse effects, if the San Diego Water Board determines that it will meet the three conditions listed in Standard Provisions – Permit Compliance I.G.3 above. (40 CFR Part 122.41(m)(4)(ii).)

5. Notice

a. Anticipated bypass. If the Discharger knows in advance of the need for a bypass, it shall submit a notice, if possible at least 10 days before the date of the bypass. (40 CFR Part 122.41(m)(3)(i).)

b. Unanticipated bypass. The Discharger shall submit notice of an unanticipated bypass as required in Standard Provisions - Reporting V.E below (24-hour notice). (40 CFR Part 122.41(m)(3)(ii).)

H. Upset

Upset means an exceptional incident in which there is unintentional and temporary noncompliance with technology based permit effluent limitations because of factors beyond the reasonable control of the Discharger. An upset does not include noncompliance to the extent caused by operational error, improperly designed treatment facilities, inadequate treatment facilities, lack of preventive maintenance, or careless or improper operation. (40 CFR Part 122.41(n)(1).)

1. Effect of an upset. An upset constitutes an affirmative defense to an action brought for noncompliance with such technology based permit effluent limitations if the requirements of Standard Provisions – Permit Compliance I.H.2 below are met. No determination made during administrative review of claims that noncompliance was caused by upset, and before an action for noncompliance, is final administrative action subject to judicial review. (40 CFR Part 122.41(n)(2).)

2. Conditions necessary for a demonstration of upset. A Discharger who wishes to establish the affirmative defense of upset shall demonstrate, through properly signed, contemporaneous operating logs or other relevant evidence that (40 CFR Part 122.41(n)(3)):

a. An upset occurred and that the Discharger can identify the cause(s) of the upset (40 CFR Part 122.41(n)(3)(i));

b. The permitted facility was, at the time, being properly operated (40 CFR Part 122.41(n)(3)(ii));

c. The Discharger submitted notice of the upset as required in Standard Provisions – Reporting V.E.2.b below (24-hour notice) (40 CFR Part 122.41(n)(3)(iii)); and

d. The Discharger complied with any remedial measures required under Standard Provisions – Permit Compliance I.C above. (40 CFR Part 122.41(n)(3)(iv).)

3. Burden of proof. In any enforcement proceeding, the Discharger seeking to establish the occurrence of an upset has the burden of proof. (40 CFR Part 122.41(n)(4).)

II. STANDARD PROVISIONS – PERMIT ACTION

A. General

This Order may be modified, revoked and reissued, or terminated for cause. The filing of a request by the Discharger for modification, revocation and reissuance, or termination, or a notification of planned changes or anticipated noncompliance does not stay any Order condition. (40 CFR Part 122.41(f).)

B. Duty to Reapply

If the Discharger wishes to continue an activity regulated by this Order after the expiration date of this Order, the Discharger must apply for and obtain a new permit. (40 CFR Part 122.41(b).)

C. Transfers

This Order is not transferable to any person except after notice to the San Diego Water Board. The San Diego Water Board may require modification or revocation and reissuance of the Order to change the name of the Discharger and incorporate such other requirements as may be necessary under the CWA and the Water Code. (40 CFR Parts 122.41(l)(3) and 122.61.)

III. STANDARD PROVISIONS – MONITORING

A. Samples and measurements taken for the purpose of monitoring shall be representative of the monitored activity. (40 CFR Part 122.41(j)(1).)

B. Monitoring results must be conducted according to test procedures under 40 CFR Part 136 or, in the case of sludge use or disposal, approved under 40 CFR Part 136 unless otherwise specified in 40 CFR Part 503 unless other test procedures have been specified in this Order. (40 CFR Parts 122.41(j)(4) and 122.44(i)(1)(iv).)

IV. STANDARD PROVISIONS – RECORDS

A. Except for records of monitoring information required by this Order related to the Discharger's sewage sludge use and disposal activities, which shall be retained for a period of at least five (5) years (or longer as required by 40 CFR Part 503), the Discharger shall retain records of all monitoring information, including all calibration and maintenance records and all original strip chart recordings for continuous monitoring instrumentation, copies of all reports required by this Order, and records of all data used to complete the application for this Order, for a period of at least three (3) years from the date of the sample, measurement, report or application. This period may be extended by request of the San Diego Water Board Executive Officer at any time. (40 CFR Part 122.41(j)(2).)

B. Records of monitoring information shall include:

1. The date, exact place, and time of sampling or measurements (40 CFR Part 122.41(j)(3)(i));

2. The individual(s) who performed the sampling or measurements (40 CFR Part 122.41(j)(3)(ii));

3. The date(s) analyses were performed (40 CFR Part 122.41(j)(3)(iii));

4. The individual(s) who performed the analyses (40 CFR Part 122.41(j)(3)(iv));

5. The analytical techniques or methods used (40 CFR Part 122.41(j)(3)(v)); and

6. The results of such analyses. (40 CFR Part 122.41(j)(3)(vi).)

C. Claims of confidentiality for the following information will be denied (40 CFR Part 122.7(b)):

1. The name and address of any permit applicant or Discharger (40 CFR Part 122.7(b)(1)); and

2. Permit applications and attachments, permits and effluent data. (40 CFR Part 122.7(b)(2).)

V. STANDARD PROVISIONS – REPORTING

A. Duty to Provide Information

The Discharger shall furnish to the San Diego Water Board, State Water Board, or USEPA within a reasonable time, any information which the San Diego Water Board, State Water Board, or USEPA may request to determine whether cause exists for modifying, revoking and reissuing, or terminating this Order or to determine compliance with this Order. Upon request, the Discharger shall also furnish to the San Diego Water Board, State Water Board, or USEPA copies of records required to be kept by this Order. (40 CFR Part 122.41(h); Water Code section 13267.)

B. Signatory and Certification Requirements

1. All applications, reports, or information submitted to the San Diego Water Board, State Water Board, and/or USEPA shall be signed and certified in accordance with Standard Provisions – Reporting V.B.2, V.B.3, V.B.4, and V.B.5 below. (40 CFR Part 122.41(k).)

2. All permit applications shall be signed by either a principal executive officer or ranking elected official. For purposes of this provision, a principal executive officer of a federal agency includes: (i) the chief executive officer of the agency, or (ii) a senior executive officer having responsibility for the overall operations of a principal geographic unit of the agency (e.g., Regional Administrators of USEPA). (40 CFR Part 122.22(a)(3).).

3. All reports required by this Order and other information requested by the San Diego Water Board, State Water Board, or USEPA shall be signed by a person described in Standard Provisions – Reporting V.B.2 above, or by a duly authorized representative of that person. A person is a duly authorized representative only if:

a. The authorization is made in writing by a person described in Standard Provisions – Reporting V.B.2 above (40 CFR Part 122.22(b)(1));

b. The authorization specifies either an individual or a position having responsibility for the overall operation of the regulated facility or activity such as the position of plant manager, operator of a well or a well field, superintendent, position of equivalent responsibility, or an individual or position having overall responsibility for environmental matters for the company. (A duly authorized representative may thus be either a named individual or any individual occupying a named position.) (40 CFR Part 122.22(b)(2)); and

c. The written authorization is submitted to the San Diego Water Board and State Water Board. (40 CFR Part 122.22(b)(3).)

4. If an authorization under Standard Provisions – Reporting V.B.3 above is no longer accurate because a different individual or position has responsibility for the overall operation of the facility, a new authorization satisfying the requirements of Standard Provisions – Reporting V.B.3 above must be submitted to the San Diego Water Board and State Water Board prior to or together with any reports, information, or applications, to be signed by an authorized representative. (40 CFR Part 122.22(c).)

5. Any person signing a document under Standard Provisions – Reporting V.B.2 or V.B.3 above shall make the following certification:

"I certify under penalty of law that this document and all attachments were prepared under my direction or supervision in accordance with a system designed to assure that qualified personnel properly gather and evaluate the information submitted. Based on my inquiry of the person or persons who manage the system or those persons directly responsible for gathering the information, the information submitted is, to the best of my knowledge and belief, true, accurate, and complete. I am aware that there are significant penalties for submitting false information, including the possibility of fine and imprisonment for knowing violations." (40 CFR Part 122.22(d).)

C. Monitoring Reports

1. Monitoring results shall be reported at the intervals specified in the Monitoring and Reporting Program (Attachment E) in this Order. (40 CFR Part 122.41(l)(4).)

2. Monitoring results must be reported on a Discharge Monitoring Report (DMR) form or forms provided or specified by the San Diego Water Board or State Water Board for reporting results of monitoring of sludge use or disposal practices. (40 CFR Part 122.41(l)(4)(i).)

3. If the Discharger monitors any pollutant more frequently than required by this Order using test procedures approved under 40 CFR Part 136, or another method required for an industry-specific waste stream under 40 C.F.R. subchapters N or O, the results of such monitoring shall be included in the calculation and reporting of the data submitted in the DMR or sludge reporting form specified by the San Diego Water Board. (40 CFR Part 122.41(l)(4)(ii).)

4. Calculations for all limitations, which require averaging of measurements, shall utilize an arithmetic mean unless otherwise specified in this Order. (40 CFR Part 122.41(l)(4)(iii).)

D. Compliance Schedules

Reports of compliance or noncompliance with, or any progress reports on, interim and final requirements contained in any compliance schedule of this Order, shall be submitted no later than 14 days following each schedule date. (40 CFR Part 122.41(l)(5).)

E. Twenty-Four Hour Reporting

1. The Discharger shall report any noncompliance that may endanger health or the environment. Any information shall be provided orally within 24 hours from the time the Discharger becomes aware of the circumstances. A written submission shall also be provided within five (5) days of the time the Discharger becomes aware of the circumstances. The written submission shall contain a description of the noncompliance and its cause; the period of noncompliance, including exact dates and times, and if the noncompliance has not been corrected, the anticipated time it is expected to continue; and steps taken or planned to reduce, eliminate, and prevent reoccurrence of the noncompliance. (40 CFR Part 122.41(l)(6)(i).)

2. The following shall be included as information that must be reported within 24 hours under this paragraph (40 CFR Part 122.41(l)(6)(ii)):

a. Any unanticipated bypass that exceeds any effluent limitation in this Order. (40 CFR Part 122.41(l)(6)(ii)(A).)

b. Any upset that exceeds any effluent limitation in this Order. (40 CFR Part 122.41(l)(6)(ii)(B).)

3. The San Diego Water Board may waive the above-required written report under this provision on a case-by-case basis if an oral report has been received within 24 hours. (40 CFR Part 122.41(l)(6)(iii).)

F. Planned Changes

The Discharger shall give notice to the San Diego Water Board as soon as possible of any planned physical alterations or additions to the permitted facility. Notice is required under this provision only when (40 CFR Part 122.41(l)(1)):

1. The alteration or addition to a permitted facility may meet one of the criteria for determining whether a facility is a new source in section 122.29(b) (40 CFR Part 122.41(l)(1)(i)); or

2. The alteration or addition could significantly change the nature or increase the quantity of pollutants discharged. This notification applies to pollutants that are not subject to effluent limitations in this Order. (40 CFR Part 122.41(l)(1)(ii).)

3. The alteration or addition results in a significant change in the Discharger's sludge use or disposal practices, and such alteration, addition, or change may justify the application of permit conditions that are different from or absent in the existing permit, including notification of additional use or disposal sites not reported during the permit application process or not reported pursuant to an approved land application plan. (40 CFR Part 122.41(l)(1)(iii).)

G. Anticipated Noncompliance

The Discharger shall give advance notice to the San Diego Water Board or State Water Board of any planned changes in the permitted facility or activity that may result in noncompliance with this Order’s requirements. (40 CFR Part 122.41(l)(2).)

H. Other Noncompliance

The Discharger shall report all instances of noncompliance not reported under Standard Provisions – Reporting V.C, V.D, and V.E above at the time monitoring reports are submitted. The reports shall contain the information listed in Standard Provision – Reporting V.E above. (40 CFR Part 122.41(l)(7).)

I. Other Information

When the Discharger becomes aware that it failed to submit any relevant facts in a permit application, or submitted incorrect information in a permit application or in any report to the San Diego Water Board, State Water Board, or US EPA, the Discharger shall promptly submit such facts or information. (40 CFR Part 122.41(l)(8).)

VI. STANDARD PROVISIONS – ENFORCEMENT

The San Diego Water Board is authorized to enforce the terms of this permit under several provisions of the Water Code, including, but not limited to, sections 13385, 13386, and 13387.

VII. ADDITIONAL PROVISIONS – NOTIFICATION LEVELS

All Publicly Owned Treatment Works (POTWs) shall provide adequate notice to the San Diego Water Board of the following (40 CFR Part 122.42(b)):

1. Any new introduction of pollutants into the POTW from an indirect discharger that would be subject to sections 301 or 306 of the CWA if it were directly discharging those pollutants (40 CFR Part 122.42(b)(1)); and

1. Any substantial change in the volume or character of pollutants being introduced into that POTW by a source introducing pollutants into the POTW at the time of adoption of the Order. (40 CFR Part 122.42(b)(2).)

2. Adequate notice shall include information on the quality and quantity of effluent introduced into the POTW as well as any anticipated impact of the change on the quantity or quality of effluent to be discharged from the POTW. (40 CFR Part 122.42(b)(3).)

ATTACHMENT E – MONITORING AND REPORTING PROGRAM

Contents

I. General Monitoring Provisions 2
II. Monitoring Locations 3
III. Influent Monitoring Requirements - Monitoring Location INF-001 4
IV. Effluent Monitoring Requirements - Monitoring Locations EFF-001, EFF-002, and EFF-003 4
A. The Discharger shall monitor effluent at EFF-001 as follows: 4
B. The Discharger shall monitor effluent at EFF-002 as follows 7
C. The Discharger shall monitor effluent at EFF-003 as follows 7
V. Whole Effluent Toxicity Testing Requirements 8
VI. Land Discharge Monitoring Requirements – Not Applicable 9
VII. Recyling Monitoring Requirements – Not Applicable 9
VIII. Receiving Water Monitoring Requirements 9
A. Surf Zone Water Quality Monitoring 9
B. Near Shore Water Quality Monitoring 10
C. Off Shore Water Quality Monitoring 11
D. Benthic Monitoring 12
E. Additional Biological Monitoring – Demersal Fish and Macroinvertebrates 12
IX. Other Monitoring Requirements 13
A. Kelp Bed Canopy 13
B. Regional Monitoring 14
C. Solids Monitoring 14
D. Sanitary Sewer Overflow (SSO) 14
X. Reporting Requirements 17
A. General Monitoring and Reporting Requirements 17
B. Self-Monitoring Reports (SMRs) 17
XI. Discharge Monitoring Reports (DMRs) 20
XII. Other Reports 20

Tables

Table E-1. Monitoring Station Locations 3
Table E-2. Influent Monitoring (SRTTP) 4
Table E-3. Effluent Monitoring at EFF-001 4
Table E-4. Effluent Monitoring at EFF-002 (SRTTP) 7
Table E-5. Effluent Monitoring at EFF-003 (AWT) 7
Table E-6. Whole Effluent Toxicity Testing at EFF-001 8
Table E-7. Approved Test for Chronic Toxicity 8
Table E-8. Near Shore Water Quality Reduced Monitoring Requirements 10
Table E-9. Near Shore Water Quality Intensive Monitoring Requirements 10
Table E-10. Off Shore Water Quality Reduced Monitoring Requirements 11
Table E-11. Off Shore Water Quality Intensive Monitoring Requirements 11
Table E-12. Sediment Monitoring Requirements 12
Table E-13. Infauna Monitoring Requirements 12
Table E-14. Demersal Fish and Macroinvertebrates Monitoring Requirements 13
Table E-15. Monitoring Periods and Reporting Schedule 18
Table E-16. Other Reports 20

ATTACHMENT E – MONITORING AND REPORTING PROGRAM (MRP)

The Code of Federal Regulations (40 CFR Part 122.48) requires that all NPDES permits specify monitoring and reporting requirements. California Water Code sections 13267 and 13383 also authorize the San Diego Water Board to require technical and monitoring reports. This MRP establishes monitoring and reporting requirements that implement federal and California regulations.

I. GENERAL MONITORING PROVISIONS

A. Samples and measurements taken as required herein shall be representative of the volume and nature of the monitoring discharge. All samples shall be taken at the monitoring points specified below and, unless otherwise specified, before the monitored flow joins or is diluted by any other waste stream, body of water, or substance. Monitoring points shall not be changed without notification to and the approval of the San Diego Water Board. Samples shall be collected at times representative of "worst case" conditions with respect to compliance with the requirement of Order No. R9-2013-0112.

B. Appropriate flow measurement devices and methods consistent with accepted scientific practices shall be selected and used to ensure the accuracy and reliability of measurements of the volume of monitored discharges. The devices shall be installed, calibrated and maintained to ensure that the accuracy of the measurement is consistent with the accepted capability of that type of device. Devices selected shall be capable of measuring flows with a maximum deviation of less than ±5 percent from true discharge rates throughout the range of expected discharge volumes.

C. Monitoring must be conducted according to United States Environmental Protection Agency (USEPA) test procedures approved at 40 CFR Part 136, Guidelines Establishing Test Procedures for the Analysis of Pollutants Under the Clean Water Act as amended, or unless other test procedures are specified in Order No. R9-2013-0112 and/or in this MRP and/or by the San Diego Water Board.

D. All analyses shall be performed in a laboratory certified to perform such analyses by the California Department of Public Health or a laboratory approved by the San Diego Water Board.

E. Records of monitoring information shall include information required under Attachment D, Standard Provisions, section IV.

F. All monitoring instruments and devices used by the Discharger to fulfill the prescribed monitoring program shall be properly maintained and calibrated as necessary to ensure their continued accuracy. All flow measurement devices shall be calibrated at least once per year, or more frequently, to ensure continued accuracy of the devices.

G. The Discharger shall have, and implement, an acceptable written quality assurance (QA) plan for laboratory analyses. Duplicate chemical analyses must be conducted on a minimum of 10 percent of the samples or at least one sample per month, whichever is greater. A similar frequency shall be maintained for analyzing spiked samples. When requested by USEPA or the San Diego Water Board, the Discharger will participate in the NPDES discharge monitoring report QA performance study. The Discharger should have a success rate equal or greater than 80 percent.

H. Analysis for toxic pollutants, including chronic toxicity, with effluent limitations or performance goals based on water quality objectives of the California Ocean Plan, shall be conducted in accordance with procedures described in the California Ocean Plan and restated in this MRP.

I. This permit may be modified in accordance with the requirements set forth at 40 CFR Parts 122 and 124, to include appropriate conditions or limitations to address demonstrated effluent toxicity based on newly available information, or to implement any USEPA approved, new, State water quality standards applicable to effluent toxicity.

II. MONITORING LOCATIONS

The Discharger shall establish the following monitoring locations to demonstrate compliance with the effluent limitations, discharge specifications, and other requirements in this Order:

Table E-1. Monitoring Station Locations

Discharge Point Name	Monitoring Location Name	Monitoring Location Description
--	INF-001	A location upstream of plant return streams at the Southern Regional Tertiary Treatment Plant (SRTTP), where a representative sample of the influent can be obtained
001	EFF-001	A location where representative samples of commingled effluent from SRTTP and the Advanced Water Treatment Plant at Haybarn Canyon (AWT) can be obtained
	EFF-002	A location where final effluent from SRTTP and downstream of any in-plant return flows and disinfection units, where representative samples of effluent treated solely at SRTTP can be obtained
	EFF-003	A location where effluent from the AWT, prior to mixing with any other flows directed to the Oceanside Ocean Outfall, can be obtained.
SURF ZONE STATONS		
--	S1	Surf zone, 5,500 feet south of the outfall
--	S2	Surf zone, 2,500 feet south of the outfall
--	S3	Surf zone, at the outfall (Latitude 33 09’ 46”N; Longitude 117 23’ 28”W)
--	S4	Surf zone, 2,000 feet north of the outfall
--	S5	Surf zone, 5,800 feet north of the outfall
NEAR SHORE STATIONS		
--	N1	Opposite S1, at the 30 foot depth contour, MLLW
--	N2	Opposite S2, at the 30 foot depth contour, MLLW
--	N3	Opposite S3, at the 30 foot depth contour, MLLW
--	N4	Opposite S4, at the 30 foot depth contour, MLLW
--	N5	Opposite S5, at the 30 foot depth contour, MLLW
OFFSHORE STATIONS		
--	A1 – A4	At the corners of a 1,000 feet x 1,000 feet square having one side parallel to shore and the intersection of its diagonals at the seaward end of the outfall
--	A5	At the intersection of its diagonals at the seaward end of the outfall
--	B1	One mile down coast from the outfall, and over the same depth contour as Station A5
--	B2	One mile up coast from the outfall, and over the same depth contour as Station A5
BIOLOGICAL TRANSECTS		
--	T0	At the 20, 40, 60, and 80 foot depth contours along the transect located 50 feet downcoast of and parallel to the outfall
--	T1	At the 20, 40, 60, and 80 foot depth contours along the transect located one mile downcoast of and parallel to the outfall
--	T2	At the 20, 40, 60, and 80 foot depth contours along the transect located one and one half miles upcoast of and parallel to the outfall

III. INFLUENT MONITORING REQUIREMENTS - MONITORING LOCATION INF-001

The Discharger shall monitor influent at INF-001 as follows:

Table E-2. Influent Monitoring (SRTTP)

Parameter	Units	Sample Type	Minimum Sampling Frequency[2]	Required Analytical Test Method
Flow Rate	MGD	recorder/totalizer	continuous	[1]
Biochemical Oxygen Demand @ 20°C (BOD_5)	mg/L	24-hr composite	1/day	[1]
Oil and Grease	mg/L	grab	1/month	[1]
Total Suspended Solids (TSS)	mg/L	24-hr composite	1/day	[1]

[1] As required under 40 CFR Part 136.
[2] 1/day applies five days per week, except seven days per week for at least one week in July or August of each year.

IV. EFFLUENT MONITORING REQUIREMENTS - MONITORING LOCATIONS EFF-001, EFF-002, AND EFF-003

A. The Discharger shall monitor effluent at EFF-001 as follows:

Table E-3. Effluent Monitoring at EFF-001[4]

Parameter	Units	Sample Type	Minimum Sampling Frequency	Required Analytical Test Method
Flow Rate	MGD	recorder/totalizer	continuous	[1]
Temperature	°C	grab	1/week	[1]
Total Residual Chlorine	µg/L	continuous	continuous	[1]
Dissolved Oxygen	mg/L	grab	1/week	[1]
TABLE 1 PARAMETERS FOR PROTECTION OF MARINE AQUATIC LIFE				
Arsenic, Total Recoverable	µg/L	24-hr composite	2/year	[1]
Cadmium, Total Recoverable	µg/L	24-hr composite	2/year	[1]
Chromium (VI), Total Recoverable[2]	µg/L	24-hr composite	2/year	[1]
Copper, Total Recoverable	µg/L	24-hr composite	1/quarter	[1]
Lead, Total Recoverable	µg/L	24-hr composite	2/year	[1]
Mercury, Total Recoverable	µg/L	24-hr composite	2/year	[1]
Nickel, Total Recoverable	µg/L	24-hr composite	2/year	[1]
Selenium, Total Recoverable	µg/L	24-hr composite	2/year	[1]
Silver, Total Recoverable	µg/L	24-hr composite	2/year	[1]
Zinc, Total Recoverable	µg/L	24-hr composite	2/year	[1]
Cyanide, Total Recoverable[3]	µg/L	24-hr composite	2/year	[1]
Ammonia (as N)	µg/L	24-hr composite	1/month	[1]
Phenolic Compounds (nonchlorinated)	µg/L	24-hr composite	2/year	[1]
Phenolic Compounds (chlorinated)	µg/L	24-hr composite	2/year	[1]
Endosulfan	µg/L	24-hr composite	2/year	[1]
Endrin	µg/L	24-hr composite	1/quarter	[1]
HCH	µg/L	24-hr composite	1/quarter	[1]

Parameter	Units	Sample Type	Minimum Sampling Frequency	Required Analytical Test Method
Radioactivity	pci/l	24-hr composite	2/year	[1]
TABLE 1 PARAMETERS FOR PROTECTION OF HUMAN HEALTH – NON CARCINOGENS				
Acrolein	µg/L	grab	2/year	[1]
Antimony	µg/L	24-hr composite	2/year	[1]
Bis(2-chloroethoxy)methane	µg/L	grab	2/year	[1]
Bis(2-chloroisopropyl) Ether	µg/L	grab	2/year	[1]
Chlorobenzene	µg/L	grab	2/year	[1]
Chromium (III), Total Recoverable	µg/L	24-hr composite	2/year	[1]
Di-n-butyl Phthalate	µg/L	grab	2/year	[1]
Dichlorobenzenes	µg/L	grab	2/year	[1]
Diethyl Phthalate	µg/L	grab	2/year	[1]
Dimethyl Phthalate	µg/L	grab	2/year	[1]
4,6-dinitro-2-methylphenol	µg/L	grab	2/year	[1]
2,4-dinitrophenol	µg/L	grab	2/year	[1]
Ethylbenzene	µg/L	grab	2/year	[1]
Fluoranthene	µg/L	grab	2/year	[1]
Hexachlorocyclopentadiene	µg/L	grab	2/year	[1]
Nitrobenzene	µg/L	grab	2/year	[1]
Thallium, Total Recoverable	µg/L	24-hr composite	2/year	[1]
Toluene	µg/L	grab	2/year	[1]
Tributyltin	µg/L	24-hr composite	2/year	[1]
1,1,1-trichloroethane	µg/L	grab	2/year	[1]
TABLE 1 PARAMETERS FOR PROTECTION OF HUMAN HEALTH – CARCINOGENS				
Acrylonitrile	µg/L	grab	2/year	[1]
Aldrin	µg/L	24-hr composite	1/quarter	[1]
Benzene	µg/L	grab	2/year	[1]
Benzidine	µg/L	grab	2/year	[1]
Beryllium	µg/L	24-hr composite	1/quarter	[1]
Bis(2-chloroethyl) Ether	µg/L	grab	2/year	[1]
Bis(2-ethlyhexyl) Phthalate	µg/L	grab	2/year	[1]
Carbon Tetrachloride	µg/L	grab	2/year	[1]
Chlordane	µg/L	24-hr composite	2/year	[1]
Chlorodibromomethane (aka dibromochloromethane)	µg/L	grab	2/year	[1]
Chloroform	µg/L	grab	2/year	[1]
DDT	µg/L	24-hr composite	2/year	[1]
1,4-dichlorobenzene	µg/L	grab	2/year	[1]
3,3'-dichlorobenzidine	µg/L	grab	2/year	[1]
1,2-dichloroethane	µg/L	grab	2/year	[1]
1,1-dichloroethylene	µg/L	grab	2/year	[1]
Dichlorobromomethane	µg/L	grab	2/year	[1]
Dichloromethane (aka Methylene Chloride)	µg/L	grab	2/year	[1]

Parameter	Units	Sample Type	Minimum Sampling Frequency	Required Analytical Test Method
1,3-dichloropropene (aka 1,3-Dichloropropylene)	µg/L	grab	2/year	[1]
Dieldrin	µg/L	24-hr composite	1/quarter	[1]
2,4-dinitrotoluene	µg/L	grab	2/year	[1]
1,2-diphenylhydrazine	µg/L	grab	2/year	[1]
Halomethanes	µg/L	grab	2/year	[1]
Heptachlor	µg/L	24-hr composite	1/quarter	[1]
Heptachlor Epoxide	µg/L	24-hr composite	1/quarter	[1]
Hexachlorobenzene	µg/L	grab	1/quarter	[1]
Hexachlorobutadiene	µg/L	grab	2/year	[1]
Hexachloroethane	µg/L	grab	2/year	[1]
Isophorone	µg/L	grab	2/year	[1]
N-nitrosodimethylamine	µg/L	grab	2/year	[1]
N-nitrosodi-N-propylamine	µg/L	grab	2/year	[1]
N-nitrosodiphenylamine	µg/L	grab	2/year	[1]
PAHs	µg/L	24-hr composite	1/quarter	[1]
PCBs	µg/L	24-hr composite	1/quarter	[1]
1,1,2,2-tetrachloroethane	µg/L	grab	2/year	[1]
TCDD equivalents	µg/L	24-hr composite	1/quarter	[1]
Tetrachloroethylene (aka Tetrachloroethene)	µg/L	grab	2/year	[1]
Toxaphene	µg/L	24-hr composite	1/quarter	[1]
Trichloroethylene (aka Trichloroethene)	µg/L	grab	2/year	[1]
1,1,2-trichloroethane	µg/L	grab	2/year	[1]
2,4,6-trichlorophenol	µg/L	grab	2/year	[1]
Vinyl Chloride	µg/L	grab	2/year	[1]

[1] As required under 40 CFR Part 136.

[2] Dischargers may, at their option, meet this limitation (or apply this performance goal) as a total chromium limitation (or performance goal).

[3] If a Discharger can demonstrate to the satisfaction of the San Diego Water Board (subject to USEPA approval) that an analytical method is available to reliably distinguish between strongly and weakly complexed cyanide, effluent limitations for cyanide may be met by (or performance goals may be evaluated with) the combined measurement of free cyanide, simple alkali metals cyanides, and weakly complexed organometallic cyanide complexes. In order for the analytical method to be acceptable, the recovery of free cyanide from metal complexes must be comparable to that achieved by the approved method in 40 CFR Part 136, as revised May 14, 1999.

[4] Minimal levels are outlined in Appendix II, Minimum Levels, of the California Ocean Plan.

B. The Discharger shall monitor effluent at EFF-002 as follows.

Table E-4. Effluent Monitoring at EFF-002 (SRTTP)

Parameter	Units	Sample Type	Minimum Sampling Frequency[3]	Required Analytical Test Method
Flow Rate[2]	MGD	Calculated	continuous	[1]
BOD_5@20°C	mg/L	24-hr composite	1/day	[1]
	% removal	calculate	1/day	[1]
$CBOD_5$@20°C	mg/L	24-hr composite	1/month	[1]
Total Suspended Solids	mg/L	24-hr composite	1/day	[1]
	% removal	calculate	1/day	[1]
Oil and Grease	mg/L	grab	1/month	[1]
Settleable Solids	ml/L	grab	1/day	[1]
Turbidity	NTU	grab	1/week	[1]
pH	units	grab	1/day	[1]

[1] As required under 40 CFR Part 136.
[2] Flow rate for EFF-002 shall be calculated from the difference of the measured flow rates from EFF-001 and EFF-003.
[3] 1/day applies five days per week, except seven days per week for at least one week in July or August of each year.

C. The Discharger shall monitor effluent at EFF-003 as follows.

Table E-5. Effluent Monitoring at EFF-003 (AWT)

Parameter	Units	Sample Type	Minimum Sampling Frequency	Required Analytical Test Method
Flow Rate	MGD	recorder/totalizer	continuous	[1]
Total Suspended Solids	mg/L	grab	1/week	[1]
Oil and Grease	mg/L	grab	1/month	[1]
Settleable Solids	ml/L	grab	1/week	[1]
Turbidity	NTU	grab	1/week	[1]
pH	units	grab	1/week	[1]
Conductivity	mmhos/cm	Grab	1/week	[1]

[1] As required under 40 CFR Part 136.

V. WHOLE EFFLUENT TOXICITY TESTING REQUIREMENTS

The Discharger shall conduct acute and chronic toxicity testing on effluent samples collected at EFF-001 in accordance with the following schedule and requirements:

Table E-6. Whole Effluent Toxicity Testing at EFF-001

Test	Unit	Sample	Minimum Test Frequency
Acute Toxicity	TU_a	24-hr composite	1/quarter
Chronic Toxicity	TU_c	24-hr composite	Every other year for 3 months, beginning with the calendar year 2015
Chronic Toxicity	TU_c	24-hr composite	1/month[1]

[1] After one year of monthly monitoring, if the San Diego Water Board Executive Officer determines that the effluent complies with the effluent limitation for chronic toxicity at section IV.A.1., Table 4 of this Order, written notification to decrease the minimum test frequency for chronic toxicity from monthly to quarterly shall be granted by the San Diego Water Board Executive Officer.

Acute toxicity testing shall be performed using either a marine fish or invertebrate species in accordance with procedures established by the USEPA guidance manual, *Methods for Measuring the Acute Toxicity of Effluents and Receiving Waters to Freshwater and Marine Organisms, 5th Edition, October 2002* (EPA-821-R-02-012).

Critical life stage toxicity tests shall be performed to measure chronic toxicity. Testing shall be performed using methods outlined in *Short-Term Methods for Estimating the Chronic Toxicity of Effluent and Receiving Waters to West Coast Marine Estuarine Organisms (*Chapman, G.A., D.L. Denton, and J.M. Lazorchak, 1995) or *Procedures Manual for Conducting Toxicity Tests Developed by the Marine Bioassay Project* (State Water Board, 1996).

A screening period for chronic toxicity shall be conducted every other year, beginning with the calendar year 2015. Each screening period shall consist of 3 consecutive months of WET tests, using a minimum of three test species with approved test protocols, from the following list (from the Ocean Plan). Repeat screening periods may be terminated after the first month if the most sensitive species is the same as the species previously found to be most sensitive. Other tests may be used, if they have been approved for such testing by the State Water Board. The test species shall include a fish, an invertebrate, and an aquatic plant. After the screening period, the most sensitive test species shall be used for the monthly testing. Control and dilution water should be receiving water or lab water as appropriate. If the dilution water is different from the culture water, then culture water should be used in a second control. The sensitivity of the test organisms to a reference toxicant shall be determined concurrently with each bioassay test and reported with test results.

Table E-7. Approved Test for Chronic Toxicity

Species	Test	Tier [1]	Reference [2]
giant kelp, *Macrocystis pyrifera*	percent germination; germ tube length	1	a, c
red abalone, *Haliotis rufescens*	abnormal shell development	1	a, c
oyster, *Crassostrea gigas*; mussels, *Mytilus spp.*	abnormal shell development; percent survival	1	a, c
urchin, *Strongylocentrotus purpuratus*; sand dollar, *Dendraster excentricus*	percent normal development	1	a, c

Species	Test	Tier [1]	Reference [2]
urchin, *Strongylocentrotus purpuratus*; sand dollar, *Dendraster excentricus*	percent fertilization	1	a, c
shrimp, *Holmesimysis costata*	percent survival; growth	1	a, c
shrimp, *Mysidopsis bahia*	percent survival; fecundity	2	b, d
topsmelt, *Atherinops affinis*	larval growth rate; percent survival	1	a, c
Silversides, *Menidia beryllina*	larval growth rate; percent survival	2	b, d

[1] First tier methods are preferred for compliance monitoring. If first tier organisms are not available, the Discharger can use a second tier test method following approval by the San Diego Water Board.

[2] Protocol References:

a. Chapman, G.A., D.L. Denton, and J.M. Lazorchak. 1995. Short-term Methods for Estimating the Chronic Toxicity of Effluents and Receiving Waters to West Coast Marine and Estuarine Organisms. USEPA Report No. EPA/600/R-95/136.
b. Klemm, D.J., G.E. Morrison, T.J. Norberg-King, W.J. Peltier, and M.A. Heber. 1994. Short-term Methods for Estimating the Chronic Toxicity of Effluents and Receiving Water to Marine and Estuarine Organisms. USEPA Report No. EPA-600-4-91-003.
c. SWRCB 1996. Procedures Manual for Conducting Toxicity Tests Developed by the Marine Bioassay Project. 96-1WQ.
d. Weber, C.I., W.B. Horning, I.I., D.J. Klemm, T.W. Nieheisel, P.A. Lewis, E.L. Robinson, J. Menkedick and F. Kessler 9eds). 1998. Short-term Methods for Estimating the Chronic Toxicity of Effluents and Receiving Waters to Marine and Estuarine Organisms. EPA/600/4-87/028. National Information Service, Springfield, VA.

VI. LAND DISCHARGE MONITORING REQUIREMENTS – NOT APPLICABLE

VII. RECYCLING MONITORING REQUIREMENTS – NOT APPLICABLE

VIII. RECEIVING WATER MONITORING REQUIREMENTS

Receiving water and sediment monitoring in the vicinity of the Oceanside Ocean Outfall (OO) shall be conducted as specified below. Station location, sampling, sampling preservation and analyses, when not specified, shall be by methods approved by the San Diego Water Board. The monitoring program may be modified by the San Diego Water Board at any time.

The receiving water and sediment monitoring program for the Oceanside OO may be conducted jointly with other dischargers to the Oceanside OO.

During monitoring events, if possible, sample stations shall be located using a land-based microwave positioning system or a satellite positioning system such as GPS. If an alternate navigation system is proposed, its accuracy should be compared to that of microwave and satellite based systems, and any compromises in accuracy shall be justified.

A. Surf Zone Water Quality Monitoring

1. Grab samples shall be collected and analyzed for total and fecal coliform and enterococcus bacteria at a minimum frequency of one time per week. As required by implementation procedures at section III.D of the Ocean Plan, measurement of enterococcus density shall be conducted at all stations where measurement of total and fecal coliform bacteria is required.

If a single sample exceeds any of the single sample bacterial standards, repeat sampling at that location shall be conducted to determine the extent and persistence of the exceedance. Repeat sampling shall be conducted within 24 hours of receiving analytical results and continued until the sample result is less than the single sample bacterial standards or until a sanitary survey is conducted to determine the source of the high bacterial densities.

Single sample bacterial standards include:

a. Total coliform density will not exceed 10,000 per 100 ml; or

b. Fecal coliform density will not exceed 400 per 100 ml; or

c. Total coliform density will not exceed 1,000 per 100 ml when the ratio of fecal/total coliform exceeds 0.1;

d. Enterococcus density will not exceed 104 per 100 ml.

2. At the same time samples are collected from surf zone stations, the following information shall be recorded: observation of wind direction and speed; weather (cloudy, sunny, or rainy); current direction; tidal conditions; and observations of water color, discoloration, oil and grease; turbidity, odor, and materials of sewage origin in the water or on the beach; water temperature (°F); and status of the mouth of the Buena Vista Lagoon (open, closed, flow, etc.).

B. Near Shore Water Quality Monitoring

All near shore stations shall be monitored as follows.

1. Reduced Monitoring

If the San Diego Water Board determines that the effluent complies with the effluent limitations and performance goals at section IV.A of this Order and the receiving water limitations at section V.A of this Order at all times, only reduced near shore water quality monitoring specified below is required.

Table E-8. Near Shore Water Quality Reduced Monitoring Requirements

Determination	Units	Type of Sample	Minimum Frequency
Visual Observations	--	--	1/Month
Total Coliform	Number / 100 mL	Grab[1]	1/Month
Fecal Coliform	Number / 100 mL	Grab[1]	1/Month
Enterococcus	Number / 100 mL	Grab[1]	1/Month

[1] At the surface.

2. Intensive Monitoring

The intensive near shore water quality monitoring specified below is required during the 12-month period beginning November 1, 2013 through October 31, 2014, and must be submitted by December 1, 2014. This monitoring data will assist the San Diego Water Board in the evaluation of the Report of Waste Discharge. The intensive near shore water quality monitoring specified below may also be required if the San Diego Water Board determines that 1) the effluent does not at all times comply with the effluent limitations and performance goals of this Order, or 2) the receiving water limitations of this Order are not being consistently achieved.

Table E-9. Near Shore Water Quality Intensive Monitoring Requirements

Determination	Units	Type of Sample	Minimum Frequency
Visual Observations	--	--	1/Month
Total Coliform	Number / 100 mL	Grab[1]	1/Month
Fecal Coliform	Number / 100 mL	Grab[1]	1/Month
Enterococcus	Number / 100 mL	Grab[1]	1/Month

[1] At the surface and mid-depth.

C. Off Shore Water Quality Monitoring

All off shore stations shall be monitored as follows.

1. Reduced Monitoring

If the San Diego Water Board determines that the effluent at all times complies with the effluent limitations and performance goals at section IV.A of this Order and the receiving water limitations at section V.A of this Order, only reduced off shore water quality monitoring specified below is required.

Table E-10. Off Shore Water Quality Reduced Monitoring Requirements

Determination	Units	Type of Sample	Minimum Frequency
Visual Observations	--	--	1/Month
Total Coliform	Number / 100 mL	Grab[1]	1/Month
Fecal Coliform	Number / 100 mL	Grab[1]	1/Month
Enterococcus	Number / 100 mL	Grab[1]	1/Month

[1] At surface and mid-depth.

2. Intensive Monitoring

The intensive off shore water quality monitoring specified below is required during the 12-month period beginning November 1, 2013 through October 31, 2014, and must be submitted by December 1, 2014. This monitoring data will assist the San Diego Water Board in the evaluation of the Report of Waste Discharge. The intensive off shore water quality monitoring specified below may also be required if the San Diego Water Board determines that 1) the effluent does not at all times comply with the effluent limitations and performance goals of this Order, or 2) the receiving water limitations of this Order are not being consistently achieved.

Table E-11. Off Shore Water Quality Intensive Monitoring Requirements

Determination	Units	Type of Sample	Minimum Frequency
Visual Observations	--	--	1/Month
Total Coliform	Number / 100 mL	Grab[1]	1/Month
Fecal Coliform	Number / 100 mL	Grab[1]	1/Month
Enterococcus	Number / 100 mL	Grab[1]	1/Month
Conductivity, Temperature, and Depth	Practical Salinity Units, °F, and feet	Grab[2]	1/Month
Dissolved Oxygen	mg/L	Grab[2]	1/Month
Light Transmittance	percent	Instrument[2]	1/Month
pH	standard units	Grab[3]	1/Month

[1] At the surface and mid-depth.
[2] At the surface, mid-depth, and bottom.
[3] At the surface.

D. Benthic Monitoring

The intensive monitoring specified below is required during the 12-month period beginning November 1, 2013 through October 31, 2014, and must be submitted by December 1, 2014. This monitoring data will assist the San Diego Water Board in the evaluation of the Report of Waste Discharge. The sediment monitoring specified below may also be required if the San Diego Water Board determines that 1) the effluent does not at all times comply with Effluent Limitations and Performance Goals of this Order or 2) the receiving water limitations of this Order are not being consistently achieved. Benthic monitoring shall be conducted at all off shore monitoring stations.

1. Sediment Characteristics.

Analyses shall be performed on the upper 2 inches of core.

Table E-12. Sediment Monitoring Requirements

Determination	Units	Type of Sample	Minimum Frequency
Sulfides	mg/kg	Core	2/Year
Total Chlorinated Hydrocarbons	mg/kg	Core	2/Year
Biochemical Oxygen Demand (5-day @ 20°C)	mg/kg	Core	2/Year
Chemical Oxygen Demand	mg/kg	Core	2/Year
Particle Size Distribution	mg/kg	Core	2/Year
Arsenic	mg/kg	Core	1/Year
Cadmium	mg/kg	Core	1/Year
Total Chromium	mg/kg	Core	1/Year
Copper	mg/kg	Core	1/Year
Lead	mg/kg	Core	1/Year
Mercury	mg/kg	Core	1/Year
Nickel	mg/kg	Core	1/Year
Silver	mg/kg	Core	1/Year
Zinc	mg/kg	Core	1/Year
Cyanide	mg/kg	Core	1/Year
Phenolic Compounds	mg/kg	Core	1/Year
Radioactivity	pCi/kg	Core	1/Year

2. Infauna.

Samples shall be collected with a Paterson, Smith-McIntyre, or orange-peel type dredge, having an open sampling area of not less than 124 square inches and a sediment capacity of not less than 210 cubic inches. The sediment shall be sifted through a 1-millimeter mesh screen and all organisms shall be identified to as low a taxon as possible.

Table E-13. Infauna Monitoring Requirements

Determination	Units	Sample Type	Minimum Frequency
Benthic Biota	Identification and enumeration	3 Grabs	2/Year

E. Additional Biological Monitoring – Demersal Fish and Macroinvertebrates

The intensive monitoring specified below is required during the 12-month period beginning November 1, 2013 through October 31, 2014, and must be submitted by December 1, 2014. This monitoring data will assist the San Diego Water Board in the evaluation of the Report of Waste Discharge, which is required to be submitted by the Discharger within 180 days prior to the Order's expiration date of December 31, 2018.

Table E-14. Demersal Fish and Macroinvertebrates Monitoring Requirements

Determination	Units	Minimum Frequency
Biological Transects	Identification and enumeration	Year 4

In rocky or cobble areas, a 30-meter band transect, 1 meter wide, shall be established on the ocean bottom. Operations at each underwater station shall include: (1) recording of water temperature (may be measured from a boat) and estimated visibility and pelagic macrobiota at each 10-foot depth increment throughout the water column and at the bottom; (2) recording of general bottom description; (3) enumeration by estimate of the larger plants and animals in the band transect area; (4) development of a representative photographic record of the sample area; and (5) within each band, three ¼-meter square areas shall be randomly selected, and all macroscopic plant and animal life shall be identified within each square to as low a taxon as possible, and measured. Sampling techniques will follow those employed by biologist divers of the California State Department of Fish and Game.

In sandy areas, a 30-meter band transect, 1 meter wide, shall be established on the ocean bottom. Operations at each underwater station shall include: (1) recording of water temperature (may be measured from a boat), and estimated visibility and pelagic macrobiota at each 10-foot depth increment throughout the water column and at the bottom; (2) recording of general bottom description; (3) recording of height, period, and crest direction of ripple marks; (4) recording of amount, description, and location of detritus on bottom; (5) creation of a representative photographic record of the area sampled; and (6) within each band, three cores of at least 42.5 cm2 in area shall be randomly taken to a depth of 15 cm where possible, (the three cores may be taken from a boat) and the material removed sifted through at least a 1 mm mesh screen, and all organisms identified to as low a taxon as possible, enumerated, measured, and reproductive conditions assessed where feasible. Sampling techniques will follow those employed by biologist divers of the California State Department of Fish and Game.

For each epifauna and infauna, size frequency and distribution shall be shown for at least the three numerically largest populations identified to the lowest possible taxon and appropriate graphs showing the relationship between species frequency and population shall be plotted from each sample.

IX. OTHER MONITORING REQUIREMENTS

A. Kelp Bed Canopy

The Discharger shall participate with other ocean dischargers in the San Diego Region in an annual regional kelp bed photographic survey. Kelp beds shall be monitored annually by means of vertical aerial infrared photography to determine the maximum aerial extent of the region's coastal kelp beds within the calendar year. Surveys shall be conducted as close as possible to the time when kelp bed canopies cover the greatest area. The entire San Diego Region coastline, from the international boundary to the San Diego Region/Santa Ana Region boundary shall be photographed on the same day.

The images produced by the surveys shall be presented in the form of 1:24,000 scale photo-mosaic of the entire San Diego Region coastline. Onshore reference points, locations of all ocean outfalls and diffusers, and the 30-foot mean lower low water (MLLW) and 60-foot (MLLW) depth contours shall be shown.

The aerial extent of the various kelp beds photographed in each survey shall be compared to that noted in surveys of previous years. Any significant losses which persist for more than one year shall be investigated by divers to determine the probable reason for the loss.

B. Regional Monitoring

The Discharger shall, as directed by the San Diego Water Board Executive Officer, participate with other regulated entities, other interested parties, and the San Diego Water Board in development, refinement, implementation, and coordination of regional monitoring and assessment programs to:

1. Determine the status and trends of conditions in ocean waters with regard to beneficial uses, e.g.

a. Are fish and shellfish safe to eat?

b. Is water quality safe for swimming?

c. Are ecosystems healthy?

2. Identify the stressors causing or contributing to conditions of concern;

3. Identify the sources of the stressors causing or contributing to conditions of concern; and

4. Evaluate the effectiveness (i.e., environmental outcomes) of actions taken to address such stressors and sources.

The sampling and analytical resources to implement specific parts of the receiving water monitoring program described in Attachment E, section VIII of this Order may be temporarily redirected to implement a regional monitoring and assessment program consistent with the San Diego Water Board's approach described in *A Framework for Monitoring and Assessment in the San Diego Region* (November 2012) and approved by the Executive Officer. The level of resources in terms of sampling and analytical effort redirected from the receiving water monitoring program required under this Order shall equal the level of resources provided to implement the regional monitoring and assessment program, unless the Executive Officer, the Discharger, City of Oceanside, and Fallbrook Public Utility District agree otherwise. The specific scope and duration of the receiving water monitoring program reallocation and redirection shall be determined and set by the Executive Officer in consultation with the Discharger, City of Oceanside, and Fallbrook Public Utility District.

C. Solids Monitoring

The Discharger shall report, annually, the volume of screenings, sludge [biosolids], grit, and other solids generated and/or removed during wastewater treatment and the locations where these waste materials are placed for disposal. Copies of all annual reports required by 40 CFR Part 503 shall be submitted to the San Diego Water Board at the same time they are submitted to the USEPA.

D. Sanitary Sewer Overflow (SSO)

1. The Discharger must obtain SSO Database accounts and receive a "Username" and "Password" by registering through the California Integrated Water Quality System (CIWQS). These accounts will allow controlled and secure entry into the Online SSO Database. Additionally, within thirty (30) days of receiving an account and prior to recording SSOs into the Online SSO Database, all Dischargers must complete the "Collection System Questionnaire", which collects pertinent information regarding a Discharger's collection system. The "Collection System Questionnaire" must be updated at least every 12 months.

2. All SSOs that meet the criteria for Category 1 SSOs, as defined in Attachment A, must be reported within 24 hours after the Discharger becomes aware of the SSO, reporting is possible, and reporting can be provided without substantially impeding cleanup or other

emergency measures. The information reported to the San Diego Water Board shall include the name and phone number of the person reporting the SSO, the responsible sewage collection agency, the estimated total sewer overflow volume, the location of the SSO, the receiving water (if any), the start date/time of the SSO (if known), the end date/time of the SSO (or whether or not the SSO is still occurring at the time of the report), and confirmation that the local health services agency was or will be notified as required under the reporting requirements of the local health services agency. A final certified report must be completed through the Online SSO Database, within 15 calendar days of the conclusion of SSO response and remediation. Additional information may be added to the certified report, in the form of an attachment, at any time.

3. All SSOs that meet the criteria for Category 2 SSOs, as defined in Attachment A, must be reported to the Online SSO Database within 30 days after the end of the calendar month in which the SSO occurs (e.g. all SSOs occurring in the month of January must be entered into the database by March 1st).

4. If there are no SSOs during the calendar month, the Discharger will provide, within 30 days after the end of each calendar month, a statement through the Online SSO Database certifying that there were no SSOs for the designated month.

5. In the event that the Online SSO Database is not available, the Discharger must fax all required information to the San Diego Water Board office in accordance with the time schedules identified above. In such event, the Discharger must also enter all required information into the Online SSO Database as soon as practicable, if possible.

6. At a minimum, the following mandatory information must be included prior to finalizing and certifying an SSO report for each category of SSO:

a. Category 2 and Private SSOs:
   i. Location of SSO by entering GPS coordinates;
   ii. Applicable Regional Water Board, i.e. identify the region in which the SSO occurred;
   iii. County where SSO occurred;
   iv. Whether or not the SSO entered a drainage channel and/or surface water;
   v. Whether or not the SSO was discharged to a storm drain pipe that was not fully captured and returned to the sanitary sewer system;
   vi. Estimated SSO volume in gallons;
   vii. SSO source (manhole, cleanout, etc.);
   viii. SSO cause (mainline blockage, roots, etc.);
   ix. Time of SSO notification or discovery;
   x. Estimated operator arrival time;
   xi. SSO destination;
   xii. Estimated SSO end time; and
   xiii. SSO Certification. Upon SSO Certification, the Online SSO Database will issue a Final SSO Identification (ID) Number.

b. Category 1 SSOs:
   i. All information listed for Category 2 SSOs, as well as;
   ii. Estimated SSO volume that reached surface water, drainage channel, or not recovered from a storm drain;
   iii. Estimated SSO amount recovered;
   iv. Response and corrective action taken;
   v. If samples were taken, identify which regulatory agencies received sample results (if applicable). If no samples were taken, NA must be selected.

vi. Parameters those samples were analyzed for (if applicable);
vii. Identification of whether or not health warnings were posted;
viii. Beaches impacted (if applicable). If no beach was impacted, NA must be selected;
ix. Whether or not there is an ongoing investigation;
x. Steps taken or planned to reduce, eliminate, and prevent reoccurrence of the overflow and a schedule of major milestones for those steps;
xi. California Emergency Management Agency (CalEMA) control number (if applicable);
xii. Date CalEMA was called (if applicable);
xiii. Time CalEMA was called (if applicable);
xiv. Identification of whether or not County Health Officers were called;
xv. Date County Health Officer was called (if applicable); and
xvi. Time County Health Officer was called (if applicable).

7. The Discharger shall comply with all applicable reporting requirements of this Order, including Provision V.E of Attachment D (24-hour reporting requirement).

8. The Discharger shall report SSOs to CalEMA, in accordance with Water Code section 13271.

CalEMA
Phone (800) 852-7550

9. The Discharger shall report SSOs to County Health officials in accordance with California Health and Safety Code section 5410 et seq.

10. The Online SSO Database will automatically generate an e-mail notification with customized information about the SSO upon initial reporting of the SSO and final certification for all Category 1 SSOs. E-mails will be sent to the appropriate County Health Officer and/or Environmental Health Department if the county desires this information, and the San Diego Water Board.

11. The Discharger shall retain records of all SSOs, such as, but not limited to and when applicable:

a. Record of Certified report, as submitted to the Online SSO Database;

b. All original recordings for continuous monitoring instrumentation;

c. Service call records and complaint logs of calls received by the Discharger;

d. SSO calls;

e. SSO records;

f. Steps that have been and will be taken to prevent the SSO from recurring and a schedule to implement those steps.

g. Work orders, work completed, and any other maintenance records from the previous 5 years which are associated with responses and investigations of system problems related to SSOs;

h. A list and description of complaints from customers or others from the previous 5 years; and

i. Documentation of performance and implementation measures for the previous 5 years.

X. REPORTING REQUIREMENTS

A. General Monitoring and Reporting Requirements

1. The Discharger shall comply with all Standard Provisions (Attachment D) related to monitoring, reporting, and recordkeeping.

2. Reports of marine monitoring surveys conducted to meet receiving water monitoring requirements of this MRP shall include, as a minimum, the following information:

a. A description of climatic and receiving water characteristics at the time of sampling (weather observations, floating debris, discoloration, wind speed and direction, swell or wave action, time of sampling, tide height, etc.

b. A description of sampling stations, including differences unique to each station (e.g., station location, sediment grain size, distribution of bottom sediments, rocks, shell litter, calcareous worm tubes, etc.).

c. A description of the sample collection and preservation procedures used in the survey.

d. A description of the specific method used for laboratory analysis.

e. An in-depth discussion of the results of the survey. All tabulations and computations shall be explained.

f. Annual reports will include detailed statistical analyses of all data. Methods may include, but are not limited to, various multivariate analyses such as cluster analysis, ordination, and regression. The Discharger should also conduct additional analyses, as appropriate, to elucidate temporal and spatial trends in the data.

3. The Discharger shall report all instances of noncompliance not reported under Attachment D, sections III, V, and VI of Order No. R9-2013-0112 at the time monitoring reports are submitted.

B. Self-Monitoring Reports (SMRs)

1. The Discharger shall electronically submit SMRs using the State Water Board's California Integrated Water Quality System (CIWQS) Program Web site (http://www.waterboards.ca.gov/ciwqs/index.html). The CIWQS Web site will provide additional information for SMR submittal in the event there will be a planned service interruption for electronic submittal. The Discharger shall maintain sufficient staffing and resources to ensure it submits SMRs that are complete and timely. This includes provision of training and supervision of individuals on how to prepare and submit SMRs.

2. The Discharger shall report in the SMR the results for all monitoring specified in this MRP under sections III through IX. The Discharger shall submit monthly, quarterly, semiannual, and annual SMRs including the results of all required monitoring using USEPA-approved test methods or other test methods specified in this Order. SMRs are to include all new monitoring results obtained since the last SMR was submitted. If the Discharger monitors any pollutant more frequently than required by this Order, the results of this monitoring shall be included in the calculations and reporting of the data submitted in the SMR.

3. Monitoring periods and reporting for all required monitoring shall be completed according to the following schedule:

Table E-15. Monitoring Periods and Reporting Schedule

Sampling Frequency	Monitoring Period Begins On…	Monitoring Period	SMR Due Date
Continuous	January 1, 2014	All	Submit with monthly SMR
1/day	January 1, 2014	(Midnight through 11:59 PM) or any 24-hour period that reasonably represents a calendar day for purposes of sampling.	Submit with monthly SMR
1/week	January 1, 2014	Sunday through Saturday	Submit with monthly SMR
1/month[1]	January 1, 2014	1st day of calendar month through last day of calendar month	First day of second calendar month following month of sampling.
1/quarter	January 1, 2014	January 1 through March 31 April 1 through June 30 July 1 through September 30 October 1 through December 31	May 1 August 1 November 1 February 1
2/year	January 1, 2014	January 1 through June 30 July 1 through December 31	September 1 March 1
Intensive Monitoring	November 1, 2013	November 1, 2013 through October 31, 2014	December 1, 2014

[1] Including all spills or no spill report as required by Section VI.C.2.b.iv. of Order No. R9-2013-0112 (page 17)

4. **Reporting Protocols.** The Discharger shall report with each sample result the applicable reported Minimum Level (reported ML, also known as the Reporting Level, or RL) and the current Method Detection Limit (MDL), as determined by the procedure in 40 CFR Part 136.

   The Discharger shall report the results of analytical determinations for the presence of chemical constituents in a sample using the following reporting protocols:

   a. Sample results greater than or equal to the reported ML shall be reported as measured by the laboratory (i.e., the measured chemical concentration in the sample).

   b. Sample results less than the reported ML, but greater than or equal to the laboratory's MDL, shall be reported as "Detected, but Not Quantified," or DNQ. The estimated chemical concentration of the sample shall also be reported.

      For the purposes of data collection, the laboratory shall write the estimated chemical concentration next to DNQ. The laboratory may, if such information is available, include numerical estimates of the data quality for the reported result. Numerical estimates of data quality may be percent accuracy (± a percentage of the reported value), numerical ranges (low to high), or any other means considered appropriate by the laboratory.

   c. Sample results less than the laboratory's MDL shall be reported as "Not Detected," or ND.

d. Dischargers are to instruct laboratories to establish calibration standards so that the ML value (or its equivalent if there is differential treatment of samples relative to calibration standards) is the lowest calibration standard. At no time is the Discharger to use analytical data derived from extrapolation beyond the lowest point of the calibration curve.

5. **Compliance Determination.** Compliance with effluent limitations for reportable pollutants shall be determined using sample reporting protocols defined above and Attachment A. For purposes of reporting and administrative enforcement by the San Diego Water Board and State Water Board, the Discharger shall be deemed out of compliance with effluent limitations if the concentration of the reportable pollutant in the monitoring sample is greater than the effluent limitation and greater than or equal to the reported Minimum Level (ML).

6. **Multiple Sample Data.** When determining compliance with a measure of central tendency (arithmetic mean, geometric mean, median, etc.) of multiple sample analyses and the data set contains one or more reported determinations of “DNQ” or “ND”, the Discharger shall compute the median in place of the arithmetic mean in accordance with the following procedure:

   a. The data set shall be ranked from low to high, ranking the reported ND determinations lowest, DNQ determinations next, followed by quantified values (if any). The order of the individual ND or DNQ determinations is unimportant.

   b. The median value of the data set shall be determined. If the data set has an odd number of data points, then the median is the middle value. If the data set has an even number of data points, then the median is the average of the two values around the middle unless one or both of the points are ND or DNQ, in which case the median value shall be the lower of the two data points where DNQ is lower than a value and ND is lower than DNQ.

7. The Discharger shall submit SMRs in accordance with the following requirements:

   a. The Discharger shall arrange all reported data in a tabular format. The data shall be summarized to clearly illustrate whether the facility is operating in compliance with interim and/or final effluent limitations. The Discharger is not required to duplicate the submittal of data that is entered in a tabular format within CIWQS. When electronic submittal of data is required and CIWQS does not provide for entry into a tabular format within the system, the Discharger shall electronically submit the data in a tabular format as an attachment.

   b. The Discharger shall attach a cover letter to the SMR. The information contained in the cover letter shall clearly identify violations of the requirements of this Order; discuss corrective actions taken or planned; and the proposed time schedule for corrective actions. Identified violations must include a description of the requirement that was violated and a description of the violation.

XI. DISCHARGE MONITORING REPORTS (DMRS)

At any time during the term of this permit, the State Water Board or San Diego Water Board may notify the Discharger to electronically submit DMRs. Until such notification is given specifically for the submittal of DMRs, the Discharger shall submit DMRs in accordance with the requirements described below.

DMRs must be signed and certified as required by the Standard Provisions (Attachment D). The Discharger shall submit the original DMR and one copy of the DMR to the address listed below:

STANDARD MAIL	FEDEX/UPS/ OTHER PRIVATE CARRIERS
State Water Resources Control Board Division of Water Quality c/o DMR Processing Center PO Box 100 Sacramento, CA 95812-1000	State Water Resources Control Board Division of Water Quality c/o DMR Processing Center 1001 I Street, 15th Floor Sacramento, CA 95814

All discharge monitoring results must be reported on the official USEPA pre-printed DMR forms (EPA Form 3320-1) or on self-generated forms that follow the exact same format of EPA Form 3320-1.

XII. OTHER REPORTS

The following reports are required under Special Provisions (section VI.C) and the California Code of Regulations and shall be submitted to the San Diego Water Board, signed and certified as required by the Standard Provisions (Attachment D):

Table E-16. Other Reports

Report	Location of requirement	Due Date
Monthly Summary of spills	section VI.C.2.b.iii	Each calendar month, submit as attachment with Monthly SMR
Toxicity Reduction Evaluation workplan	section VI.C.2.d	Within 180 days of the adoption of this Order
Annual Industrial Survey	section VI.C.5.b.ii	Annually on March 1
Annual Sludge Report	section VI.C.5.c.iii and ix Attachment E, section IX.C	Annually on February 19
Report of Waste Discharge (for reissuance)	Title 23, California Code of Regulations	180 days before the Order expiration date
POTW Capacity Report	section VI.C.5.b	Four years prior to reaching plant design capacity

ATTACHMENT F – FACT SHEET

Contents

I. Permit Information 3
II. Facility Description 4
  A. Description of Wastewater and Biosolids Treatment and Controls 4
  B. Discharge Points and Receiving Waters 6
  C. Summary of Existing Requirements and Self-Monitoring Report (SMR) Data 7
  D. Compliance Summary 10
  E. Planned Changes 11
III. Applicable Plans, Policies, and Regulations 12
  A. Legal Authorities 12
  B. California Environmental Quality Act (CEQA) 12
  C. State and Federal Laws, Regulations, Policies, and Plans 12
  D. Impaired Water Bodies on CWA 303(d) List 14
  E. Other Plans, Polices and Regulations 14
IV. Rationale for Effluent Limitations and Discharge Specifications 14
  A. Discharge Prohibitions 15
  B. Technology-Based Effluent Limitations 15
    1. Scope and Authority 15
    2. Applicable Technology-Based Effluent Limitations 16
  C. Water Quality-Based Effluent Limitations (WQBELs) 16
    1. Scope and Authority 16
    2. Applicable Beneficial Uses and Water Quality Criteria and Objectives 17
    3. Determining the Need for WQBELs 18
    4. WQBEL Calculations 22
    5. Whole Effluent Toxicity (WET) 29
  D. Final Effluent Limitation Considerations 30
    1. Anti-Backsliding Requirements 30
    2. Antidegradation Policies 30
    3. Stringency of Requirements for Individual Pollutants 30
  E. Interim Effluent Limitations – not applicable 30
  F. Land Discharge Specifications – not applicable 30
  G. Recycling Specifications – not applicable 30
V. Rationale for Receiving Water Limitations 31
VI. Rationale for Provisions 31
  A. Standard Provisions 31
  B. Special Provisions 32
    1. Reopener Provisions 32
    2. Special Studies and Additional Monitoring Requirements 32
    3. Best Management Practices and Pollution Prevention – Not Applicable 33
    4. Construction, Operation, and Maintenance Specifications – Not Applicable 33
    5. Special Provisions for Municipal Facilities (Wastewater Facilities Only) 34
    6. Other Special Provisions - Responsibilities, Liabilities, Legal Action, Penalties 35
    7. Compliance Schedules – Not Applicable 35
VII. Rationale for Monitoring and Reporting Requirements 35
  A. Influent Monitoring 36
  B. Effluent Monitoring 36
  C. Whole Effluent Toxicity (WET) Testing Requirements 36

D. Receiving Water Monitoring - Surface Water 37
1. Microbiological (Near Shore and Off Shore) 37
2. Benthic Monitoring 37
3. Fish and Invertebrate 37
E. Other Monitoring Requirements 37
1. Kelp Bed Monitoring 37
2. Regional Monitoring 37
3. Solids Monitoring 38
4. Sanitary Sewer Overflow 38
VIII. Public Participation 38
A. Notification of Interested Parties 39
B. Written Comments 39
C. Public Hearing 39
D. Reconsideration of Waste Discharge Requirements 40
E. Information and Copying 40
F. Register of Interested Persons 40
G. Additional Information 40

Tables

Table F-1. Facility Information 3
Table F-2a. Historic Effluent Limitations and Monitoring Data for SRTTP (EFF-002[1]) 8
Table F-2b. Historic Effluent Limitations and Monitoring Data for AWT (EFF-003) 8
Table F-2c. Historic Effluent Limitations and Monitoring Data for SRTTP and AWT (EFF-001) 9
Table F-3. Basin Plan Beneficial Uses 12
Table F-4. Ocean Plan Beneficial Uses 13
Table F-5. Summary of Technology-Based Effluent Limitations for Secondary Treatment Facilities Established by USEPA at 40 CFR Part 133.102 16
Table F-6. Summary of Technology-Based Effluent Limitations from Table 2 of the Ocean Plan 16
Table F-7. RPA Results Summary 20
Table F-8. Pollutants Having Background Concentrations 23
Table F-9. Example Parameter Water Quality Objectives 23
Table F-10. Summary of Water Qualilty-based Effluent Limitations, Discharge Point No. 1 24
Table F-11. Summary of Performance Goals 25

ATTACHMENT F – FACT SHEET

As described in section II.B, the San Diego Water Board incorporates this Fact Sheet as findings of the San Diego Water Board supporting the issuance of this Order. This Fact Sheet includes the legal requirements and technical rationale that serve as the basis for the requirements of this Order.

This Order has been prepared under a standardized format to accommodate a broad range of discharge requirements for Dischargers in California. Only those sections or subsections of this Order that are specifically identified as "not applicable" have been determined not to apply to this Discharger. Sections or subsections of this Order not specifically identified as "not applicable" are fully applicable to this Discharger.

I. PERMIT INFORMATION

The following table summarizes administrative information related to the facility.

Table F-1. Facility Information

WDID	9 000001182
Discharger	Marine Corps Base, Camp Pendleton
Name of Facility	Southern Regional Tertiary Treatment Plant and Advanced Water Treatment Plant at Haybarn Canyon
Facility Address	Marine Corps Base Camp Pendleton, CA 92055 San Diego County
Facility Contact, Title and Phone	Brian Y. Shin, Wastewater Section Head (or current Wastewater Section Head) Camp Pendleton Marine Corps Base Environmental Security Box 555008 Camp Pendleton, CA 92055
Authorized Person to Sign and Submit Reports	1. Director, Environmental Security 2. Deputy Director, Environmental Security 3. Head, Environmental Compliance Division, Environmental Security; and 4. Head, Environmental Engineering Branch, Environmental Security
Mailing Address	Box 555008, Camp Pendleton, CA 92055
Billing Address	Same as mailing address
Type of Facility	Wastewater treatment facility for military base (federal facility) and groundwater treatment facility
Major or Minor Facility	Major
Threat to Water Quality	1
Complexity	A
Pretreatment Program	No – Source Control Program
Recycling Requirements	Producer
Facility Permitted Flow	Southern Regional Tertiary Treatment Plant and Advanced Water Treatment Plant at Haybarn Canyon: 3.6 million gallons per day (MGD)
Facility Design Flow	Southern Regional Tertiary Treatment Plant: 7.5 MGD
Watershed	Pacific Ocean
Receiving Water	Pacific Ocean
Receiving Water Type	Ocean waters

A. The Marine Corps Base, Camp Pendleton (hereinafter Discharger) is the owner of the Southern Regional Tertiary Treatment Plant (SRTTP) and Advanced Water Treatment Plant at Haybarn Canyon (AWT)). The SRTTP treats wastewater from the southern portion of Marine Corps Base, Camp Pendleton that is primarily domestic in nature from residences, commercial areas, and offices. The AWT is a potable water treatment facility that takes water from groundwater wells within the Ysidora Hydrologic area and processes the water for potable water consumption. SRTTP and AWT are located on the Marine Corps Base Camp Pendleton and are operated and maintained by CDM, under contract with the Discharger.

For the purposes of this Order, references to the "discharger" or "permittee" in applicable federal and state laws, regulations, plans, or policy are held to be equivalent to references to the Discharger herein.

B. SRTTP discharges of secondary- and tertiary-treated wastewater and AWT discharges of brine are comingled and discharged jointly approximately 1.7 mile out into the Pacific Ocean, a water of the United States, though the City of Oceanside's Ocean Outfall (Oceanside OO). The Discharger was previously regulated by Order No. R9-2008-0096 and National Pollutant Discharge Elimination System (NPDES) Permit No. CA0109347 adopted on November 1, 2008, amended on June 13, 2012, and expired on November 1, 2013. Attachment B provides a map of the area around SRTTP and AWT. Attachment C provides a flow schematic of SRTTP and AWT.

C. The Discharger filed a report of waste discharge and submitted an application for reissuance of its waste discharge requirements (WDRs) and NPDES permit on May 2, 2013. Supplemental information was requested on May 9, 2013 and received on May 22, 2013. The application was deemed complete on May 24, 2013.

II. FACILITY DESCRIPTION

A. Description of Wastewater and Biosolids Treatment and Controls

The following describes each of the Discharger's facilities that discharge to the Oceanside OO.

1. SRTTP

SRTTP headworks consists of mechanical bar screens, influent pump station wet well, alum injection (only if needed to neutralize phosphorus), influent flow meter, fine drum screens, grit collectors, and drain pump station (return streams from SRTTP's buildings and processes). As an added design enhancement, if the influent pump station should go down for any reason, flow will automatically be diverted to the Lemon Grove Impoundment Basins for containment to prevent a spill. Grit and debris from the headworks is washed to remove organics, and then discharged to a roll-off container for disposal in the Marine Corps Base Camp Pendleton (MCBCP) Landfill, along with the solids from the bar screens and drum screens.

Effluent from the grit collectors and return streams flow to secondary treatment processes, which consists of sequencing batch reactors (SBRs) and supplemental carbon injection (only if needed).

Effluent from the SBRs flow to the one-million gallon flow equalization basin, filter feed pumps (equalization basin pumps), and disk filters. Flow from the disk filters is sent to Oceanside OO via the Oceanside Ocean Outfall Pump Station (OOOPS) or to the disinfection contact basins for reclamation, depending on reclaimed water demands. If there is insufficient capacity through the OOOPS and insufficient recycled water demand, flow from the disk filters can also be sent to the Lemon Grove Recycle System and Lemon Grove Impoundment (Basin 1 and 2). From the Lemon Grove Recycle System and Lemon Grove Impoundment, the waste can be sent back to the disk filters or to the headworks.

MCBCP also utilizes the tertiary treated effluent from SRTTP for reclamation purposes such as landscape irrigation. The recycled water is regulated under separate waste discharge requirements, Order No. R9-2009-0021, *Master Reclamation Permit for Southern Regional Tertiary Treatment Plant, United States Marine Corps, Camp Pendleton, San Diego County*.

Waste activated sludge (WAS) is pumped from the SBR basins to either the WAS Holding Tank or any of the aerobic digesters. Thickened sludge from the aerobic digesters can be mixed with the WAS to obtain the proper concentration, prior to sludge thickening from the gravity belt thickeners and aerobic digestion. For final disposal, the digested sludge will then be pumped to centrifuges for dewatering. Dewatered solids are moved by a belt conveyor to a truck/trailer and then transported to the Biosolids Storage Facility. From the Biosolids Storage Facility, the waste is sent to appropriate disposal facilities.

2. AWT

The South Water System Iron/Manganese Water Treatment Plant 240162 (IM Plant 24) at the MCBCP treats groundwater extracted from potable water supply source wells within the Ysidora Hydrologic Area (902.10) in the Santa Margarita Basin (902.00) on MCBCP. The treated groundwater from IM Plant 42 can be further processed at the AWT, which is adjacent to IM Plant 24. During the treatment of groundwater at the AWT to produce potable product water for MCBCP, brine is generated and discharged to the Oceanside OO via OOOPS.

Treated groundwater from the IM Plant 24 first passes through the liquid granulated activated carbon (LGAC) system at the AWT, which reduces total organic carbon (TOC) and removes any volatile organic compounds (VOCs) that may appear in the groundwater from the source wells. The groundwater then passes through five horizontal cartridge filters, prior to treatment with the reverse osmosis (RO) system. Sulfuric acid and antiscalant is added to the RO feed water for pH adjustment and threshold inhibition, respectively. The RO system reduces the total dissolved solids (TDS) and TOC from the groundwater to produce product water for MCBCP and concentrates the TDS and TOC in the brine.

The operation of the source wells will be managed to optimize the water quality to be introduced into the IM Plant 24 and AWT. The RO system provides adequate capacity to treat a portion of the IM Plant 24 effluent to consistently achieve a TDS concentration of less than 325 milligrams per liter (mg/L) in the product water, which is a blend of RO permeate and AWT bypass stream.

B. Discharge Points and Receiving Waters

Effluent from SRTTP and AWT are commingled at the OOOPS which is located at SRTTP. The pipeline from the AWT to the OOOPS is 16-inch high density polyethylene and travels in the south to southwesterly direction along Vandegrift Boulevard for approximately 7 miles before turning northwest onto Stuart Mesa Road. The pipeline then turns southwest toward the OOOPS.

From the OOOPS, a 16-inch ductile iron pipeline conveys the effluent from SRTTP and AWT to the Oceanside OO, where they connect on South Pacific Street just north of Buccaneer Beach. The contract operator of SRTTP, CDM, is responsible for the operation and maintenance of the pipeline up to the border of the City of Oceanside on Harbor Drive at Carmelo Drive. The City of Oceanside maintains the line within the city limits.

The Discharger is in the process of evaluating viable brine disposal at Del Mar Beach to discharge the brine from the AWT. If the dedicated brine disposal structure is implemented, brine from the AWT can be discharged to the dedicated brine disposal structure or Oceanside OO via OOOPS.

The City of Oceanside owns and operates the Oceanside OO which begins at the City of Oceanside's La Salina Wastewater Treatment Plant site just north of the mouth of Loma Alta Creek and extends southwesterly approximately 8,850 feet offshore to a depth of approximately 100 feet. The Oceanside OO has a 35.75-inch internal diameter.

The Oceanside OO terminates with a 230-feet diffuser collinear with the rest of the outfall and extends to a depth of approximately 108 feet. The diffuser has fourteen 5-inch diameter ports and ten 4-inch diameter ports. The terminus of the diffuser is located at Latitude 33° 09' 46" North, Longitude 117° 23' 29" West.

Order No. R9-2008-0096 stated that the design capacity of the Oceanside OO is an average daily flow of 30 MGD, with a maximum rated peak day capacity of 45 MGD. However, during an inspection of the Oceanside OO in 2009, the City of Oceanside determined that the outfall interior diameter is 35.75-inches, not 36-inches as shown in the construction drawings and previously recorded in the Fact Sheet for Order No. R9-2008-0096. The City of Oceanside's 2009 inspection also determined that a coating of soft muck is currently coating the entire interior circumference of the outfall pipe, reducing outfall capacity. Further, a sediment survey of the diffuser confirmed a sediment buildup, particularly near the end of the diffuser, also contributing to a loss of outfall capacity. The City of Oceanside submitted these findings to the San Diego Water Board in a 2010 Ocean Outfall Capacity Report. The report concludes that the current available capacity of the Oceanside OO is 22.6 MGD, significantly less than the previously reported 30 MGD. However, the City of Oceanside reported that this capacity is sufficient until 2016, when wet weather flows may result in an exceedance of the Oceanside OO capacity.

The Fallbrook Public Utility District has a contract with the City of Oceanside for the discharge of up to 2.4 MGD of tertiary-treated effluent to the Pacific Ocean through the Oceanside OO on an annual basis, subject to waste discharge requirements of Order No. R9-2012-0004 (NPDES No. CA0108031). Order No. R9-2012-0004 prohibits the City of Fallbrook from discharging in excess of an average monthly flow rate of 2.7 MGD during the dry-weather months (May to October) and 3.6 MGD during the wet-weather months (November to April).

Genentech, Inc. has a contract with the City of Oceanside for the discharge of up to 0.85 MGD of brine and other wastes associated with water softening and purification processes and other non-industrial maintenance-type activities to the Pacific Ocean through the Oceanside OO, subject to waste discharge requirements contained in Order No. R9-2008-0082 (NPDES No. CA0109193). Order No. R9-2008-0082 includes an effluent flow limit of 0.155 MGD.

The Discharger currently has a contract with the City of Oceanside for the discharge of up to 3.6 MGD of undisinfected secondary effluent to the Pacific Ocean through the Oceanside OO. As of May 2, 2013, MCBCB was still in the process of negotiating with the City of Oceanside to continue discharging treated effluent to the Oceanside OO at a maximum rate of 3.6 MGD.

The City of Oceanside currently discharges secondary treated wastewater and brine to the Pacific Ocean through the Oceanside OO, subject to waste discharge requirements of Order No. R9-2011-0016 (NPDES No. CA0107433). Order No. R9-2011-0016 prohibits the City of Oceanside from discharging a combined effluent (discharge of waste from Fallbrook Public Utility District, Genentech, US Marine Corps Camp Pendleton, and City of Oceanside) in excess of an average monthly flow rate of 22.6 MGD through the Oceanside OO (Monitoring Location M-005 as specified in Attachment E of Order No. R9-2011-0016). This combined effluent flow prohibition may be increased upon documentation demonstrating that the Oceanside OO has been cleaned, the 15-inch diameter meter section has been replaced, and the Oceanside OO has sufficient capacity for 24.4 MGD of waste (Order No. R9-2011-0016, section VI.C.5.a).

C. Summary of Existing Requirements and Self-Monitoring Report (SMR) Data

During the entire term of Order No. R9-2008-0096, effluent from SRTTP was discharged to the Oceanside OO. Full continuous discharge from AWT did not start until March 4, 2013. Effluent limitations contained in Order No. R9-2008-0096 for discharges from SRTTP and representative monitoring data from the term of Order No. R9-2008-0096 are as follows:

Table F-2a. Historic Effluent Limitations and Monitoring Data for SRTTP (EFF-002[1])

Parameter	Units	Effluent Limitation			Monitoring Data (From November 2008 To February 2013)		
		Average Monthly	Average Weekly	Instantaneous Maximum	Highest Average Monthly Discharge	Highest Average Weekly Discharge	Highest Daily Discharge
Biochemical Oxygen Demand @ 20°C (BOD_5)	mg/L	30	45	-	11.9	19.4	28.6
	lbs/day	901	1351	-	130	210	400
	% removal	85	-	-	94[3]	81[3]	7[3]
Total Suspended Solids (TSS)	mg/L	30	45	-	9.7	31.5	73.4
	lbs/day	751	1201	-	120	590	980
	% removal	85	-	-	95[3]	92[3]	70[3]
Oil and Grease	mg/L	25	40	75	<5.45	13.7	13.7
	lbs/day	751	1201	2252	<130	270	270
Settleable Solids	ml/L	1.0	1.5	3.0	<0.2	<0.2	14
Turbidity	NTU	75	100	225	8.0	29.4	29.4
pH	Standard units	-	-	[2]			6.0/8.6[4]

[1] Prior to Amending Order No. R9-2012-0041, *An Order Modifying Order No. R9-2008-0096, NPDES No. CA0109347, Marine Corps Base, Camp Pendleton, Southern Regional Tertiary Treatment Plant, Discharge to the Pacific Ocean Through the Oceanside OO, San Diego County*, the monitoring location for SRTTP was EFF-001.
[2] Within limit of 6.0 to 9.0 at all times
[3] Lowest percent removal
[4] Lowest and highest pH values

Effluent limitations contained in Order No. R9-2008-0096 for discharges from AWT and representative monitoring data from the term of Order No. R9-2008-0096, are as follows:

Table F-2b. Historic Effluent Limitations and Monitoring Data for AWT (EFF-003)

Parameter	Units	Effluent Limitation			Monitoring Data (From January 2013 – To February 2013)
		Average Monthly	Average Weekly	Instantaneous Maximum	Highest Daily Discharge
TSS	mg/L	60	-	-	<20
	lbs/day	866	-	-	<17
Oil and Grease	mg/L	25	40	75	<1.36
	lbs/day	361	557	1082	<1.1
Settleable Solids	ml/L	1.0	1.5	3.0	<0.2
Turbidity	NTU	75	100	225	1.04
pH	Standard units	-	-	[1]	7.6/8.2[2]

[1] Within limit of 6.0 to 9.0 at all times
[2] Lowest and highest pH values

Effluent limitations contained in Order No. R9-2008-0096 for discharges from SRTTP and AWT and representative monitoring data from the term of Order No. R9-2008-0096 are as follows:

Table F-2c. Historic Effluent Limitations and Monitoring Data for SRTTP and AWT (EFF-001)

Parameter	Units	Effluent Limitation			Monitoring Data (From March 2009 – To October 2012)
		Average monthly/ 6-month median/ 30- day average[1]	Maximum Daily	Instantaneous Maximum	Highest Daily Discharge
Flow	MGD	3.6	-	-	2.8/3.0/3.4[2]
BASED ON OBJECTIVES FOR PROTECTION OF MARINE AQUATIC LIFE					
Chronic Toxicity	TUc	-	145	-	35.7
Copper, Total Recoverable	ug/L	9.00E+01	8.82E+02	2.47E+03	17.2
	lb/day	2.70E+00	2.65E+01	7.40E+01	2.31E-01
Total Residual Chlorine	ug/L	1.76E+02	7.04E+02	5.28E+03	515
	lb/day	5.28E+00	2.11E+01	1.59E+02	9.3
Endrin	ug/L	1.76E-01	3.52E-01	5.28E-01	<2.1E-01
	lb/day	5.28E-03	1.06E-02	1.59E-02	<4E-03
HCH	ug/L	3.52E-01	7.04E-01	1.06E+00	<1.1E-01
	lb/day	1.06E-02	2.11E-02	3.17E-02	<2.0E-03
OBJECTIVES FOR PROTECTION OF HUMAN HEALTH – CARCINOGENS					
Aldrin	ug/L	1.94E-03	-	-	<1.2E-02
	lb/day	5.81E-05	-	-	<2.6E-4
Beryllium	ug/L	2.90E+00	-	-	<2E-00
	lb/day	8.72E-02	-	-	<3E-02
Dieldrin	ug/L	3.52E-03	-	-	<1.2E-02
	lb/day	1.06E-04	-	-	<2.6E-4
Heptachlor	ug/L	4.40E-03	-	-	<1E-02
	lb/day	1.32E-04	-	-	<2.6E-04
Heptachlor Epoxide	ug/L	1.76E-03	-	-	<1.2E-02
	lb/day	5.28E-05	-	-	<2.6E-4
Hexachlorobenzene	ug/L	1.85E-02	-	-	<1.0E01
	lb/day	5.55E-04	-	-	<1.2E-01
PCBs	ug/L	1.67E-03	-	-	<5.8E-01
	lb/day	5.02E-05	-	-	<1.3E-02
TCDD equivalents	ug/L	3.43E-07	-	-	9.44E-08
	lb/day	1.03E-08	-	-	1.3E-09
Toxaphene	ug/L	1.85E-02	-	-	<5.8E-01
	lb/day	5.55E-04	-	-	<1.1E-02

[1] Average monthly applies to flow, 6-month median applies to objectives for protection of marine aquatic life, and 30-day average applies to objectives for protection of human health – carcinogens.
[2] Highest average monthly/ average weekly/ daily discharge for flow

D. Compliance Summary

1. Inspections of SRTTP were conducted on May 6, 2009; April 7, 2010; April 28, 2011; January 9, 2012; and December 5, 2012. Compliance issues noted by the inspectors were as follows:

   a. **May 6, 2009 Inspection.** No major violation findings were noted.

   b. **April 7, 2010 Inspection.** San Diego Water Board Order No. R9-2008-0096, Attachment E. section III.A.1., Table E-3 (Effluent Monitoring) requires minimum sampling frequencies for effluent parameters. The effluent pumps were shut down for maintenance from December 26, 2009 to December 30, 2009. The contract lab was verbally notified of the shutdown but failed to reschedule collection of several daily and weekly grab samples. As a result, the sampling frequency in December 2009 for oil and grease, temperature, dissolved oxygen, turbidity, pH and settleable solids did not meet minimum sampling frequencies. The Discharger notified the contract lab project manager of the sampling error, and the lab has since put new protocols in place to avoid future missed sampling events.

   c. **April 7, 2010 Inspection.** San Diego Water Board Order No. R9-2008-0096, Attachment E. section III.A.1, Table E-3 (Effluent Monitoring) requires minimum sampling frequencies for effluent parameters. An effluent chlorine residual meter is used to continuously record Total Residual Chlorine. The meter was out of service and not recording from December 9, 2009 to December 30, 2009. As a result, the sampling frequency in December 2009, did not meet the continuous minimum sampling frequency for Total Residual Chlorine. A more reliable model of chlorine analyzer has been installed.

   d. **April 28, 2011 Inspection.** San Diego Water Board Order No. R9-2008-0096, Attachment E, section IX.F.4 requires that the Discharger "shall report with each sample result the applicable reported Minimum Level (ML) and the current Method Detection Limit (MDL), as determined by the procedure in Part 136." The Discharger's contract laboratory's (EnviroMatrix Analytical, Inc.) analytical reports for the period under review (September 2010 through December 2010) did not include the applicable reported ML and the current MDL for each sample result.

   e. **April 28, 2011 Inspection.** San Diego Water Board Order No. R9-2008-0096, Attachment D, section X.B.4 requires monitoring records to include the name of the individual performing the analyses. The Discharger's contract laboratory's (EnviroMatrix Analytical, Inc.) analytical reports for the period under review (September 2010 through December 2010) did not include the name of the person or persons performing the analyses. The Discharger contracts all of the SRTTP's self-monitoring activities to Shaw Environmental who then contracts sample analyses to EnviroMatrix Analytical, Inc.

   f. **April 28, 2011 Inspection.** San Diego Water Board Order No. R9-2008-0096, Attachment E, section III.A.1, Table E-2 specifies that the Discharger shall monitor influent Biochemical Oxygen Demand (BOD) a minimum of once per day. The Discharger reported in the September 2010 SMR that the influent BOD sample and BOD percent removal calculation were not reportable for September 30, 2010 due to the influent flow meter not accurately monitoring flow. In addition, one influent TSS

sample and one TSS percent removal calculation were not reportable on September 30, 2010 due to the influent flow meter not accurately monitoring flow. The Facility Wastewater Branch Head and Lead O&M Specialist (or Chief Plant Operator) explained that interrupted signals have continued to be an issue with the ADS dual sensor probe causing influent flow to not be continuously monitored. On March 2, 2011, the Discharger submitted an email communication to the San Diego Water Board proposing a change to the influent monitoring location to a Magmeter located at the discharge of the influent pump station (IPS). The San Diego Water Board agreed to allow the Discharger to monitor influent flow from this Magmeter as a temporary fix via email on March 7, 2011.

g. **January 9, 2012 Inspection.** San Diego Water Board Order No. R9-2008-0096, Attachment D, section V.B. requires that all reports be signed and certified by an appropriately designated person, and that the Discharger inform the San Diego Water Board of any changes in the name of the appropriately designated person. The Discharger's 2010 Annual SMR dated January 28, 2011, and the SMRs during the period of review (August 2011 through November 2011) were not signed and certified in accordance with the permit provisions and permit Fact Sheet. Specifically the permit Fact Sheet stated that Mr. Khalique Khan was the authorized person to sign and submit reports; however, as stated by the primary on-site facility representatives, Mr. Khan was no longer with the facility. The 2010 Annual SMR dated January 28, 2011 was signed and certified by Mr. G.G. Seaman and two subsequent monthly SMRs were signed and certified by Mr. Mark Bonsavage. The Discharger was not able to provide adequate explanation for the multiple signatories nor was the Discharger able to provide a copy of a notice to the San Diego Water Board for a change in the authorized representative as required by the permit.

h. **December 5, 2012 Inspection.** No major violation findings were noted.

2. During the term of Order No. R9-2008-0096, there were eight effluent violations, 27 deficient monitoring violations, and seven unauthorized discharges. Additional information on the violations can be found at http://www.waterboards.ca.gov/water_issues/programs/ciwqs/

E. Planned Changes

As stated in section II.B above, the Discharger is in the process of evaluating viable brine disposal at Del Mar Beach to discharge the brine from the AWT. If the dedicated brine disposal structure is implemented, brine from the AWT can be discharged to the dedicated brine disposal structure or Oceanside OO via OOOPS.

At the time Order No. R9-2012-0041, *An Order Modifying Order No. R9-2008-0096, NPDES No. CA0109347, Marine Corps Base, Camp Pendleton, Southern Regional Tertiary Treatment Plant, Discharge to the Pacific Ocean Through the Oceanside OO, San Diego County*, was adopted, the Discharger was upgrading the SRTTP from 5.0 MGD to 7.5 MGD. The upgrade is expected to be completed by September 2013. There are no further changes planned for the SRTTP and AWT.

III. APPLICABLE PLANS, POLICIES, AND REGULATIONS

The requirements contained in this Order are based on the requirements and authorities described in this section.

A. Legal Authorities

This Order serves as WDRs pursuant to article 4, chapter 4, division 7 of the California Water Code (commencing with section 13260). This Order is also issued pursuant to section 402 of the federal Clean Water Act (CWA) and implementing regulations adopted by the USEPA and chapter 5.5, division 7 of the Water Code (commencing with section 13370). It shall serve as an NPDES permit for point source discharges from this facility to surface waters.

B. California Environmental Quality Act (CEQA)

Under Water Code section 13389, this action to adopt an NPDES permit is exempt from the provisions of Chapter 3 of CEQA, (commencing with section 21100) of Division 13 of the Public Resources Code.

C. State and Federal Laws, Regulations, Policies, and Plans

1. **Water Quality Control Plan.** The San Diego Water Board adopted a Water Quality Control Plan for the San Diego Region (hereinafter Basin Plan) on September 8, 1994 that designates beneficial uses, establishes water quality objectives, and contains implementation programs and policies to achieve those objectives for the Pacific Ocean and other receiving waters addressed through the plan. Subsequent revisions to the Basin Plan have also been adopted by the San Diego Water Board and approved by the State Water Resources Control Board (State Water Board). Beneficial uses applicable to the Pacific Ocean are as follows:

Table F-3. Basin Plan Beneficial Uses

Discharge Point	Receiving Water Name	Beneficial Use(s)
001	Pacific Ocean	industrial service supply; navigation; contact water recreation; non-contact water recreation; commercial and sport fishing; preservation of biological habitats of special significance; wildlife habitat; rare, threatened, or endangered species, marine habitat, aquaculture, migration of aquatic organisms; spawning, reproduction, and/or early development; shellfish harvesting

The Basin Plan relies primarily on the requirements of the Water Quality Control Plan for Ocean Waters of California (Ocean Plan) for protection of the beneficial uses of the State ocean waters. The Basin Plan, however, contains additional water quality objectives applicable to the Discharger. Requirements of this Order implement the Basin Plan.

2. **California Ocean Plan.** The State Water Board adopted the Water Quality Control Plan for Ocean Waters of California, California Ocean Plan (Ocean Plan) in 1972 and amended it in 1978, 1983, 1988, 1990, 1997, 2000, 2005, 2009, and 2012. The State Water Board adopted the latest amendment on October 16, 2012, and it became effective on August 19, 2013. The Ocean Plan is applicable, in its entirety, to point source discharges to the

ocean. The Ocean Plan identifies beneficial uses of ocean waters of the state to be protected as summarized below:

Table F-4. Ocean Plan Beneficial Uses

Discharge Point	Receiving Water	Beneficial Uses
Outfall 001	Pacific Ocean	Industrial water supply; water contact and non-contact recreation, including aesthetic enjoyment; navigation; commercial and sport fishing; mariculture; preservation and enhancement of designated Areas of Special Biological Significance (ASBS); rare and endangered species; marine habitat; fish spawning and shellfish harvesting

In order to protect the beneficial uses, the Ocean Plan establishes water quality objectives and a program of implementation. Requirements of this Order implement the Ocean Plan.

3. **Alaska Rule.** On March 30, 2000, USEPA revised its regulation that specifies when new and revised State and tribal water quality standards become effective for CWA purposes (40 CFR Part 131.21; 65 Fed. Reg. 24641; April 27, 2000). Under the revised regulation (also known as the Alaska Rule), new and revised standards submitted to USEPA after May 30, 2000, must be approved by USEPA before being used for CWA purposes. The final rule also provides that standards already in effect and submitted to USEPA by May 30, 2000 may be used for CWA purposes, whether or not approved by USEPA.

4. **Antidegradation Policy.** Federal regulation 40 CFR Part 131.12 requires that the state water quality standards include an antidegradation policy consistent with the federal policy. The State Water Board established California's antidegradation policy in State Water Board Resolution No. 68-16. Resolution No. 68-16 is deemed to incorporate the federal antidegradation policy where the federal policy applies under federal law. Resolution No. 68-16 requires that existing water quality be maintained unless degradation is justified based on specific findings. The San Diego Water Board's Basin Plan implements, and incorporates by reference, both the state and federal antidegradation policies. The permitted discharge must be consistent with the antidegradation provision of 10 CFR Part 131.12 and State Water Board Resolution No. 68-16.

5. **Anti-Backsliding Requirements.** Sections 402(o) and 303(d)(4) of the CWA and federal regulations at 40 CFR Part 122.44(l) restrict effluent backsliding in NPDES permits. These anti-backsliding provisions require that effluent limitations, standards, or conditions in a reissued permit must be as stringent as those in the previous permit, with some exceptions in which limitations may be relaxed.

6. **Endangered Species Act Requirements.** This Order does not authorize any act that results in the taking of a threatened or endangered species or any act that is now prohibited, or becomes prohibited in the future, under either the California Endangered Species Act (Fish and Game Code, §§ 2050 to 2097) or the Federal Endangered Species Act (16 USC §§ 1531 to 1544). This Order requires compliance with effluent limitations, receiving water limits, and other requirements to protect the beneficial uses of waters of the state, including protecting rare and endangered species. The Discharger is responsible for meeting all requirements of the applicable Endangered Species Act.

D. Impaired Water Bodies on CWA 303(d) List

On November 12, 2010, the USEPA approved the list of impaired water bodies, prepared by the State Water Board pursuant to section 303(d) of the CWA, which are not expected to meet applicable water quality standards after implementation of technology-based effluent limitations for point sources. The 303(d) List includes the following sections of Pacific Ocean shoreline within the proximity of the Oceanside OO:

1. 0.3 miles of Pacific Ocean Shoreline, San Luis Rey HU, at San Luis Rey River mouth as impaired for total coliform and enterococcus.

2. 0.3 miles of Pacific Ocean Shoreline, Loma Alta HSA, at Loma Alta Creek mouth as impaired for indicator bacteria

Impairment has been detected at the shorelines indicated above; however, the receiving waters in the immediate vicinity of the SRTTP and AWT's discharge point (Discharge Point No. 001) are not included on the current 303(d) List.

This permit implements receiving water objectives for bacterial indicators.

E. Other Plans, Polices and Regulations

1. **Executive Officer Delegation of Authority.** The San Diego Water Board by prior resolution has delegated all matters that may legally be delegated to its Executive Officer to act on its behalf pursuant to Water Code section 13223. Therefore, the Executive Officer is authorized to act on the San Diego Water Board's behalf on any matter within this Order unless such delegation is unlawful under Water Code section 13223 or this Order explicitly states otherwise.

2. **Storm Water.** Sewage treatment works with a design flow of 1.0 MGD or greater are required to comply with Water Quality Order No. 97-03-DWQ (NPDES General Permit No. CAS000001), WDRs for Discharges of Storm Water Associated with Industrial Activity, Excluding Construction Activities. The Discharger shall file a Notice of Intent within 60 days of adoption of this Order (unless already submitted under the previous Order) and comply with Order No. 97-03-DWQ or the Discharger shall provide certification to the San Diego Board that all storm water is captured and treated on-site and no storm water is discharged or allowed to run off-site from the SRTTP.

IV. RATIONALE FOR EFFLUENT LIMITATIONS AND DISCHARGE SPECIFICATIONS

The CWA requires point source dischargers to control the amount of conventional, non-conventional, and toxic pollutants that are discharged into the waters of the United States. The control of pollutants discharged is established through effluent limitations and other requirements in NPDES permits. There are two principal bases for effluent limitations in the Code of Federal Regulations: 40 CFR Part 122.44(a) requires that permits include applicable technology-based limitations and standards; and 40 CFR Part 122.44(d) requires that permits include water quality-based effluent limitations to attain and maintain applicable numeric and narrative water quality criteria to protect the beneficial uses of the receiving water.

A. Discharge Prohibitions

This Order retains the discharge prohibitions from Order No. R9-2008-0096, as described below. Compliance determination language is included in section VII of this Order to accurately describe how violations of these prohibitions are determined. Discharges from the SRTTP and AWT to surface waters of the United States in violation of prohibitions contained in this Order are violations of the CWA and therefore are subject to third party lawsuits. Discharges from the SRTTP and AWT to land that are not discharges to waters of the United States are violations governed by the Water Code and are not subject to third party lawsuits under the CWA because the Water Code does not contain provisions allowing third party lawsuits.

Discharge Prohibitions III.A through III.C have been carried over from Order No. R9-2008-0096. Prohibition III.A clearly define what types of discharges are prohibited. Prohibition III.B and III.C include discharge prohibitions of the Ocean Plan and the Basin Plan

B. Technology-Based Effluent Limitations

1. Scope and Authority

Section 301(b) of the CWA and implementing USEPA permit regulations at 40 CFR Part 122.44(a)(1) require that permits include conditions meeting applicable technology-based requirements at a minimum, and any more stringent effluent limitations necessary to meet applicable water quality standards.

Regulations promulgated in 40 CFR Part 125.3 require technology-based effluent limitations to be placed in NPDES permits.

The Federal Water Pollution Control Act Amendments of 1972 (PL 92-500) established the minimum performance requirements attainable through the application of secondary treatment [defined in section 304(d)(1)].

Based on this statutory requirement, USEPA developed secondary treatment regulations, which are specified in 40 CFR Part 133. These technology-based regulations apply to all wastewater treatment plants and identify the minimum level of effluent quality attainable by secondary treatment in terms of BOD5, TSS, and pH.

The Ocean Plan is applicable, in its entirety, to point source discharges to the ocean. Therefore, the discharge of wastewater and brine to the Pacific Ocean at Discharge Point No. 001 is subject to the Ocean Plan. The Ocean Plan establishes water quality objectives, general requirements for management of waste discharged to the ocean, effluent quality requirements for waste discharges, discharge prohibitions, and general provisions. Further, Table 2 of the Ocean Plan establishes technology-based effluent limitations for publicly-owned treatment works and industrial discharges for which Effluent Limitation Guidelines have not been established pursuant to sections 301, 302, or 306 of the CWA (summarized in Table F-6 below). This Order established numeric effluent limitations based on Table 2 of the Ocean Plan.

The discharge authorized by this Order must meet minimum federal technology-based requirements based on Secondary Treatment Standards at 40 CFR Part 133 and technology-based contained in Table 2 of the Ocean Plan.

2. Applicable Technology-Based Effluent Limitations

Technology-based regulations, specified in 40 CFR Part 133, are summarized in the table below.

Table F-5. Summary of Technology-Based Effluent Limitations for Secondary Treatment Facilities Established by USEPA at 40 CFR Part 133.102

Parameter	Monthly Average	Weekly Average	30-day Percent Removal
Biochemical Oxygen Demand (5-day @ 20 °F) (BOD_5)	30 mg/L	45 mg/L	85%
Total Suspended Solids	30 mg/L	45 mg/L	85%
pH	[1]		

[1] Within limit of 6.0 to 9.0 at all times

Technology-based regulations, specified in Table 2 of the Ocean Plan, are summarized below:

Table F-6. Summary of Technology-Based Effluent Limitations from Table 2 of the Ocean Plan

Parameter	Unit	Average Monthly	Average Weekly	Instantaneous Maximum
Grease and Oil	mg/L	25	40	75
Total Suspended Solids	mg/L	60[1]	--	--
Settleable Solids	ml/L	1.0	1.5	3.0
Turbidity	NTU	75	100	225
pH	standard units	--	--	[2]

[1] Dischargers shall, as a 30-day average, remove 75 percent of suspended solids from the influent stream before discharging wastewaters to the ocean, except that the effluent limitation to be met shall not be lower than 60 mg/L.
[2] Within limit of 6.0 to 9.0 at all times

Because secondary treatment standards contain effluent limitations for TSS that are more stringent than Table 2 of the Ocean Plan, the more stringent effluent limitations for TSS will be applied to discharges from the SRTTP.

The current maximum permitted flow is a calendar-monthly average flow of 3.6 MGD based on the current contract with the City of Oceanside to discharge to the Oceanside OO. This effluent limitation is being carried over from Order No. R9-2009-0096 to this Order.

C. Water Quality-Based Effluent Limitations (WQBELs)

1. Scope and Authority

Section 301(b) of the CWA and 40 CFR Part 122.44(d) require that permits include limitations more stringent than applicable federal technology-based requirements where necessary to achieve applicable water quality standards.

Part 122.44(d)(1)(i) of 40 CFR requires that permits include effluent limitations for all pollutants that are or may be discharged at levels that have the reasonable potential to

cause or contribute to an exceedance of a water quality standard, including numeric and narrative objectives within a standard. Where reasonable potential has been established for a pollutant, but there is no numeric criterion or objective for the pollutant, WQBELs must be established using: (1) USEPA criteria guidance under section 304(a) of the CWA, supplemented where necessary by other relevant information; (2) an indicator parameter for the pollutant of concern; or (3) a calculated numeric water quality criterion, such as a proposed state criterion or policy interpreting the state's narrative criterion, supplemented with other relevant information, as provided in section 122.44(d)(1)(vi).

The process for determining reasonable potential and calculating WQBELs when necessary is intended to protect the designated uses of the receiving water as specified in the Basin Plan and Ocean Plan, and achieve applicable water quality objectives and criteria that are contained in the Ocean Plan.

2. Applicable Beneficial Uses and Water Quality Criteria and Objectives

The Basin Plan and Ocean Plan designate beneficial uses, establish water quality objectives, and contain implementation programs and policies to achieve those objectives for all waters.

a. Basin Plan. The beneficial uses specified in the Basin Plan applicable to the Pacific Ocean are summarized in section III.C.1 of this Fact Sheet. The Basin Plan includes water quality objectives for dissolved oxygen and pH applicable to the receiving water.

   The Basin Plan states, "The terms and conditions of the State Board's "*Water Quality Control Plan for Ocean Waters of California*" (Ocean Plan), "*Water Quality Control Plan for Control of Temperature in the Coastal and Interstate Waters and Enclosed Bays and Estuaries of California*" (Thermal Plan), and any revisions thereto are incorporated into this Basin Plan by reference. The terms and conditions of the Ocean Plan and Thermal Plan apply to the ocean waters within this Region."

b. Ocean Plan. The beneficial uses specified in the Ocean Plan for the Pacific Ocean are summarized in section III.C.2 of this Fact Sheet. The Ocean Plan also includes water quality objectives for the ocean receiving water for bacterial characteristics, physical characteristics, chemical characteristics, biological characteristics, and radioactivity.

   Table 1 of the Ocean Plan includes the following water quality objectives for toxic pollutants and whole effluent toxicity:

   i. 6-month median, daily maximum, and instantaneous maximum objectives for 21 chemicals and chemical characteristics, including total residual chlorine and chronic toxicity, for the protection of marine aquatic life.

   ii. 30-day average objectives for 20 non-carcinogenic chemicals for the protection of human health.

   iii. 30-day average objectives for 42 carcinogenic chemicals for the protection of human health.

   iv. Daily maximum objectives for acute and chronic toxicity.

3. Determining the Need for WQBELs

Order No. R9-2008-0096, as amended by Order No. R9-2012-0041, contained effluent limitations for non-conventional and toxic pollutant parameters in Table 1 of the 1997 California Ocean Plan. For this Order and Amending Order No. R9-2012-0041, the need for effluent limitations based on water quality objectives in Table 1 of the Ocean Plan was re-evaluated in accordance with 40 CFR Part 122.44(d) and guidance for statistically determining the "reasonable potential" for a discharged pollutant to exceed an objective, as outlined in the revised Technical Support Document for Water Quality-Based Toxics Control (TSD; EPA/505/2-90-001, 1991) and the Ocean Plan Reasonable Potential Analysis (RPA) Amendment that was adopted by the State Water Board on April 21, 2005. The statistical approach combines knowledge of effluent variability (as estimated by a coefficient of variation) with the uncertainty due to a limited amount of effluent data to estimate a maximum effluent value at a high level of confidence. This estimated maximum effluent value is based on a lognormal distribution of daily effluent values. Projected receiving water values (based on the estimated maximum effluent value or the reported maximum effluent value and minimum probable initial dilution), can then be compared to the appropriate objective to determine that potential for an exceedance of that objective and the need for an effluent limitation. According to the Ocean Plan amendment, the RPA can yield three endpoints: 1) Endpoint 1, an effluent limitation is required and monitoring is required; 2) Endpoint 2, an effluent limitation is not required and the San Diego Water Board may require monitoring; 3) Endpoint 3, the RPA is inconclusive, monitoring is required, and an existing effluent limitation may be retained or a permit reopener clause may be included to allow inclusion of an effluent limitation if future monitoring warrants the inclusion. Endpoint 3 is typically the result when there are fewer than 16 data points and all are censored data (i.e., below quantitation or method detection levels for an analytical procedure). If no data was provided for a parameter, and an RPA could not be conducted for that parameter, reasonable potential for that parameter was carried over to this Order based on the requirements of federal and State anti-backsliding regulations. Data for all parameters was available to conduct an RPA.

The implementation provisions for Table 1 in section III.C of the Ocean Plan specify that the minimum initial dilution is the lowest average initial dilution within any single month of the year. Dilution estimates are to be based on observed waste flow characteristics, observed receiving water density structure, and the assumption that no currents of sufficient strength to influence the initial dilution process flow across the discharge structure. Prior to issuance of Order No. R9-2008-0096, the State Water Board had determined the minimum initial dilution factor (Dm) for the Oceanside OO to be 87 to 1 (87:1). This determination was based on flow from the Discharger, City of Oceanside, Fallbrook Public Utility District, and Genentech, yielding a total flow rate of 29.055 MGD. Although the capacity of the SRTTP has been increased and the Discharger has added an additional discharge (i.e. addition of discharges from the AWT), the total flow from the Discharger has not changed. Further, the newly reduced capacity of the Oceanside OO is expected to result in more available dilution. Therefore, the previous Dm of 87:1 will be retained for this Order and applied to WQBELs established herein.

Using the RPcalc 2.0 software tool developed by the State Water Board for conducting reasonable potential analyses, the San Diego Water Board has conducted the RPA for the constituents in Table F-7. For parameters without reasonable potential, a narrative limit statement to comply with all Ocean Plan objectives requirements is provided. This Order includes desirable maximum effluent concentrations for constituents that do not have

reasonable potential which were derived using effluent limitation determination procedure described above below and are referred to in this Order as "performance goals". The Discharger is required to monitor for these constituents as stated in the MRP (Attachment E of this Order) to gather data for use in reasonable potential analyses for future permit renewals.

For Order No. R9-2008-0096, the RPA was conducted utilizing the data collected during the term of Order No. R9-2003-0155, a Dm of 87:1, and RPcalc 2.0. Reasonable Potential (Endpoint 1) to exceed water quality objectives contained within the Ocean Plan was determined for copper and total residual chlorine, thus effluent limitations for copper and total residual chlorine were established in Order No. R9-2008-0096. In addition, because only one year of data was available for the SRTTP to conduct the RPA, and numerous parameters resulted in End Point 3 (could not conclusively determine that no reasonable potential exists), reasonable potential for chronic toxicity was carried over from the Order No. R9-2003-0155 to Order No. R9-2008-0096 to account for any synergistic effects in the effluent that might not be apparent in the limited effluent data.

For Amending Order No. R9-2012-0041, data for the comingled discharge of brine from AWT and wastewater from the SRTTP was not available. Influent data for the AWT, however, was provided by the Discharger, which included 47 out of 83 Table 1 parameters to conduct an RPA. The influent data for the AWT included four data sources: source well samples taken during 2009 (i.e. influent to the IM Plant), source well samples taken during 2008, effluent samples taken from the IM Plant (i.e. influent to the AWT) during 2008-2009 timeframe, and a special effluent sampling event at the IM Plant taken during August 2010. Effluent data for the AWT was projected based on the highest measured value for each parameter from the four data sources and based on the assumed concentration factor of 7 for the brine relative to the feed source. The projected brine effluent data was then combined with the 2007 SRTTP effluent data, assuming 1.73 MGD brine discharge and 3.6 MGD total combined discharge. A Dm of 87:1 was utilized for the RPA. Reasonable Potential (Endpoint 1) to exceed water quality objectives contained within the Ocean Plan was determined for copper, endrin, HCH, aldrin, beryllium, dieldrin, heptachlor, heptachlor epoxide, hexachlorobenzene, PAHs, PCBs, TCDD equivalents, and toxaphene. Thus effluent limitations for these parameters were established in Amending Order No. R9-2012-0041.

For this Order, effluent data provided in the Discharger's ROWD for the SRTTP from November 2008 through February 2013 were used in the RPA. The effluent data does not include full continuous discharge from AWT, since AWT did not start full continuous discharge until March 4, 2013. A minimum probable initial dilution of 87:1 was considered in this evaluation.

A summary of the RPA results is provided below:

Table F-7. RPA Results Summary

Parameter	Units	n[1]	MEC[2,4]	Most Stringent Criteria	Background	RPA Endpoint[3]
Arsenic	µg/L	16	1.51	8[5]	3[6]	2
Cadmium	µg/L	16	<0.2	1[5]	0	2
Chromium (VI)	µg/L	16	1.84	2[5]	0	2
Copper	µg/L	52	62	3[5]	2[6]	2
Lead	µg/L	16	<0.1	2[5]	0	2
Mercury	µg/L	16	<0.002	0.04[5]	0.0005[6]	2
Nickel	µg/L	16	3.18	5[5]	0	2
Selenium	µg/L	16	<0.2	15[5]	0	2
Silver	µg/L	16	<0.2	0.7[5]	0.16[6]	2
Zinc	µg/L	16	73.4	20[5]	8[6]	2
Cyanide	µg/L	16	<0.005	1[5]	0	2
Total Residual Chlorine	µg/L	1533	515	2[5]	0	1
Ammonia	µg/L	52	3280	600[5]	0	2
Acute Toxicity	TUa	52	0.69	0.3[7]	0	2
Chronic Toxicity	TUc	52	35.7	1[7]	0	2
Phenolic Compounds	µg/L	16	14	30[5]	0	2
Chlorinated Phenolics	µg/L	16	<4.7	1[5]	0	2
Endosulfan	µg/L	15	<0.01	0.009[5]	0	3
Endrin	µg/L	16	<0.01	0.002[5]	0	3
HCH	µg/L	16	<0.01	0.004[5]	0	2
Radioactivity (pCi/L)	pCi/L	16	11.56	[8]	0	--
Acrolein	µg/L	8	<2	220[9]	0	3
Antimony	µg/L	8	<0.5	1,200[9]	0	3
Bis(2-chloroethoxyl)methane	µg/L	8	<4.9	4.4[9]	0	3
Bis(2-chloroisopropyl)ether	µg/L	8	<4.9	1,200[9]	0	3
Chlorobenzene	µg/L	8	<1	570[9]	0	3
Chromium (III)	µg/L	8	<0.2	190,000[9]	0	3
Di-n-butyl phthalate	µg/L	8	<4.9	3,500[9]	0	3
Dichlorobenzenes	µg/L	8	<1	5,100[9]	0	3
Diethyl phthalate	µg/L	8	<4.9	33,000[9]	0	3
Dimethyl phthalate	µg/L	8	<4.9	820,000[9]	0	3
4,6-Dinitro-2-methylphenol	µg/L	9	<4.9	220[9]	0	3
2,4-Dinitrophenol	µg/L	9	<4.9	4.0[9]	0	3
Ethylbenzene	µg/L	8	<1	4,100[9]	0	3
Fluoranthene	µg/L	8	<4.9	15[9]	0	3
Hexachlorocyclopentadiene	µg/L	8	<4.9	58[9]	0	3
Nitrobenzene	µg/L	8	<4.9	4.9[9]	0	3
Thallium	µg/L	8	<0.2	2[9]	0	3
Toluene	µg/L	8	<1	85,000[9]	0	3
Tributyltin	µg/L	8	<0.00058	0.0014[9]	0	3
1,1,1-Trichloroethane	µg/L	8	<1	540,000[9]	0	3
Acrylonitrile	µg/L	8	<2	0.10[9]	0	3
Aldrin	µg/L	8	<0.00251	0.000022[9]	0	3
Benzene	µg/L	8	<1	5.9[9]	0	3
Benzidine	µg/L	8	<21	0.000069[9]	0	3
Beryllium	µg/L	8	<0.1	0.033[9]	0	3
Bis(2-chloroethyl) ether	µg/L	8	<0.52	0.045[9]	0	3
Bis(2-ethylhexyl) phthalate	µg/L	8	<4.9	3.5[9]	0	3
Carbon tetrachloride	µg/L	8	<1	0.90[9]	0	3
Chlordane	µg/L	8	<0.01	0.000023[9]	0	3

Parameter	Units	n[1]	MEC[2,4]	Most Stringent Criteria	Background	RPA Endpoint[3]
Chlorodibromomethane (aka dibromochloromethane)	µg/L	8	13	8.6[9]	0	3
Chloroform	µg/L	7	36	130[9]	0	3
DDT	µg/L	8	<0.00664	0.00017[9]	0	3
1,4-Dichlorobenzene	µg/L	8	<1	18[9]	0	3
3,3-Dichlorobenzidine	µg/L	8	<2.6	0.0081[9]	0	3
1,2-Dichloroethane	µg/L	8	<1	28[9]	0	3
1,1-Dichloroethylene	µg/L	8	<1	0.9[9]	0	3
Dichlorobromomethane	µg/L	8	24	6.2[9]	0	3
Dichloromethane (aka Methylene Chloride)	µg/L	8	<1	450[9]	0	3
1,3-Dichloropropene (aka 1,3-Dichloropropylene)	µg/L	8	<2	8.9[9]	0	3
Dieldrin	µg/L	8	<0.00283	0.00004[9]	0	3
2,4-Dinitrotoluene	µg/L	9	<4.9	2.6[9]	0	3
1,2-Diphenylhydrazine	µg/L	8	<4.9	0.16[9]	0	3
Halomethanes	µg/L	8	<2	130[9]	0	3
Heptachlor	µg/L	8	<0.00119	0.00005[9]	0	3
Heptachlor Epoxide	µg/L	8	<0.00257	0.00002[9]	0	3
Hexachlorobenzene	µg/L	8	<0.52	0.00021[9]	0	3
Hexachlorobutadiene	µg/L	8	<4.9	14[9]	0	3
Hexachloroethane	µg/L	8	<4.9	2.5[9]	0	3
Isophorone	µg/L	8	<4.9	730[9]	0	3
N-nitrosodimethylamine	µg/L	8	<4.9	7.3[9]	0	3
N-nitrosodi-N-propylamine	µg/L	8	<4.9	0.38[9]	0	3
N-nitrosodiphenylamine	µg/L	8	<4.9	2.5[9]	0	3
PAHs	µg/L	8	<5.1	0.0088[9]	0	3
PCBs	µg/L	8	<0.01405	0.000019[9]	0	3
TCDD equivalents	pg/L	8	<1.24E-06	0.0039[9]	0	3
1,1,2,2-Tetrachloroethane	µg/L	8	<1	2.3[9]	0	3
Tetrachloroethylene (aka Tetrachloroethene)	µg/L	8	<1	2.0[9]	0	3
Toxaphene	µg/L	8	<0.04539	0.00021[9]	0	3
Trichloroethylene (aka Trichloroethene)	µg/L	8	<1	27[9]	0	3
1,1,2-Trichloroethane	µg/L	8	<1	9.4[9]	0	3
2,4,6-Trichlorophenol	µg/L	9	<1	0.29[9]	0	3
Vinyl Chloride	µg/L	8	<1	36[9]	0	3

1 Number of data points available for the RPA.
2 If there is a detected value, the highest reported value is summarized in the table. If there are no detected values, the lowest MDL is summarized in the table.
3 End Point 1 – RP determined, limit required, monitoring required.
End Point 2 – Discharger determined not to have RP, monitoring may be established.
End Point 3 – RPA was inconclusive, carry over previous limits if applicable, and establish monitoring.
4 Note that the reported MEC does not account for dilution. The RPA does account for dilution; therefore it is possible for a parameter with an MEC in exceedance of the most stringent criteria not to present a RP (i.e. Endpoint 1).
5 Based on the 6-Month Median in the Table 1 of the Ocean Plan.
6 Background concentrations contained in Table 3 of the Ocean Plan.
7 Based on the Daily Maximum in Table 1 of the Ocean Plan.
8 Not to exceed limits specified in Title 17, Division 1, Chapter 5, Subchapter 4, Group 3, Article 3, section 30253 of the California Code of Regulations. Radioactivity at levels that exceed the applicable criteria are not expected in the discharge.
9 Based on 30-Day Average in Table 1 of the Ocean Plan.

Performance goals are retained for constituents for which RPA results indicated Endpoint 2 and Endpoint 3 in both the RPA for Amending Order No. R9-2012-0041 (projected effluent quality of the brine from the AWT and wastewater from SRTTP) and the RPA for this Order (data collected during the term of Order No. R9-2008-0096 from SRTTP). Parameters for which Endpoint 2 was concluded are determined not to have reasonable potential, thus it is inappropriate to establish effluent limitations for these parameters. For parameters for which Endpoint 3 was concluded, reasonable potential was not determined.

For Amending Order No. R9-2012-0041, reasonable potential (Endpoint 1) to exceed water quality objectives contained within the Ocean Plan was determined for copper, endrin, HCH, aldrin, beryllium, dieldrin, heptachlor, heptachlor epoxide, hexachlorobenzene, PAHs, PCBs,TCDD equivalents, and toxaphene. For this Order, reasonable potential (Endpoint 1) to exceed water quality objectives contained within the Ocean Plan was determined for total residual chlorine. In addition, because no data was available for the brine from the AWT and numerous parameters resulted in Endpoint 3 (could not conclusively determine that no reasonable potential exists), reasonable potential for chronic toxicity is being carried over from Order No. R9-2008-0096 to account for any synergistic effects in the effluent that might not be apparent in the limited effluent data.

4. WQBEL Calculations

a. From the Table 1 water quality objectives of the Ocean Plan, effluent limitations and performance goals are calculated according to the following equation for all pollutants, except for acute toxicity (if applicable) and radioactivity:

$$Ce = Co + Dm\ (Co - Cs)$$ where,

Ce = the effluent limitation (µg/L)
Co = the water quality objective to be met at the completion of initial dilution (ug/L)
Cs = background seawater concentration (µg/L)
Dm = minimum probably initial dilution expressed as parts seawater per part wastewater

The performance goal for acute toxicity is calculated according to the following equation:

$$Ce = Co + (0.1)\ Dm\ (Co - Cs)$$

where all variables are as indicated above. This equation applies only when Dm is greater than 24.

b. Initial dilution (Dm) has been determined to be 87:1 by the San Diego Water Board, through the application of USEPA's dilution model, Visual Plumes. More information regarding the calculation of the initial dilution can be found in section IV.C.3 of this attachment.

c. Table 3 of the Ocean Plan establishes background concentrations for some pollutants to be used when determining reasonable potential (represented as "Cs"). In

accordance with Table 1 implementing procedures, Cs equals zero for all pollutants not established in Table 3. The background concentrations provided in Table 3 are summarized below:

Table F-8. Pollutants Having Background Concentrations

Pollutant	Background Seawater Concentration
Arsenic	3 µg/L
Copper	2 µg/L
Mercury	0.0005 µg/L
Silver	0.16 µg/L
Zinc	8 µg/L

d. Part 122.45(f)(1) of 40 CFR requires effluent limitations be expressed in terms of mass, with some exceptions, and 40 CFR Part 122.45(f)(2) allows pollutants that are limited in terms of mass to additionally be limited in terms of other units of measurement. This Order includes effluent limitations expressed in terms of mass and concentration. In addition, pursuant to the exceptions to mass limitations provided in 40 CFR Part 122.45(f)(1), some effluent limitations are not expressed in terms of mass, such as pH and temperature, and when the applicable standards are expressed in terms of concentration (e.g., CTR criteria and MCLs) and mass limitations are not necessary to protect the beneficial uses of the receiving water.

Mass-based effluent limitations were calculated using the following equation:

lb/day = Permitted Flow (MGD) x Pollutant Concentration (mg/L) x 8.34

e. As examples, effluent limitations for copper and residual chlorine are determined as follows:

Water quality objectives from the Ocean Plan for copper and residual chlorine are:

Table F-9. Example Parameter Water Quality Objectives

Pollutant	6-Month Median	Daily Maximum	Instantaneous Maximum
Copper (µg/L)	3	12	30
Total Residual Chlorine (µg/L)	2	8	60

Using the equation, Ce = Co + Dm (Co – Cs), effluent limitations/performance goals are calculated as follows before rounding to two significant digits.

<u>Copper</u>

Ce = 3 + 87 (3 – 2) = 90 µg/L (6-Month Median)
Ce = 12 + 87 (12– 2) = 882 µg/L (Daily Maximum)
Ce = 30 + 87 (30 – 2) = 2,466 µg/L (Instantaneous Maximum)

lb/day = 3.6MGD x 0.090 mg/L x 8.34 = 2.70 lb/day (6-Month Median)
lb/day = 3.6MGD x 0.882 mg/L x 8.34 = 26.5 lb/day (Daily Maximum)
lb/day = 3.6MGD x 2.466 mg/L x 8.34 = 74.0 lb/day (Instantaneous Maximum)

Total Chlorine Residual

Ce = 2 + 87 (2 – 0) = 176 µg/L (6-Month Median)
Ce = 8 + 87 (8 – 0) = 704 µg/L (Daily Maximum)
Ce = 60 + 87 (60 – 0) = 5,280 µg/L (Instantaneous Maximum)

lb/day = 3.6MGD x 0.176 mg/L x 8.34 = 5.28 lb/day (6-Month Median)
lb/day = 3.6MGD x 0.704 mg/L x 8.34 = 21.1 lb/day (Daily Maximum)
lb/day = 3.6MGD x 5.280 mg/L x 8.34 = 159 lb/day (Instantaneous Maximum)

Based on the implementing procedures described above, effluent limitation and performance goals have been calculated for all Table 1 pollutants from the California Ocean Plan and incorporated into this Order.

A summary of the WQBELs established in this Order is provided below:

Table F-10. Summary of Water Qualilty-based Effluent Limitations, Discharge Point No. 1

Parameter	Unit	Water Quality-Based Effluent Limitations[1]			
		6-Month Median	Maximum Daily	Instantaneous Maximum	30-Day Average
BASED ON OBJECTIVES FOR PROTECTION OF MARINE AQUATIC LIFE					
Chronic Toxicity	TUc	NA	88	NA	--
Copper, Total Recoverable	µg/L	9.00E+01	8.82E+02	2.47E+03	--
	lb/day	2.70E+00	2.65E+01	7.40E+01	--
Total Residual Chlorine	µg/L	1.76E+02	7.04E+02	5.28E+03	--
	lb/day	5.28E+00	2.11E+01	1.59E+02	--
Endrin	µg/L	1.76E-01	3.52E-01	5.28E-01	--
	lb/day	5.28E-03	1.06E-02	1.59E-02	--
HCH	µg/L	3.52E-01	7.04E-01	1.06E+00	--
	lb/day	1.06E-02	2.11E-02	3.17E-02	--
OBJECTIVES FOR PROTECTION OF HUMAN HEALTH – CARCINOGENS					
Aldrin	µg/L	--	--	--	1.94E-03
	lb/day	--	--	--	5.81E-05
Beryllium	µg/L	--	--	--	2.90E+00
	lb/day	--	--	--	8.72E-02
Dieldrin	µg/L	--	--	--	3.52E-03
	lb/day	--	--	--	1.06E-04
Heptachlor	µg/L	--	--	--	4.40E-03
	lb/day	--	--	--	1.32E-04
Heptachlor Epoxide	µg/L	--	--	--	1.76E-03
	lb/day	--	--	--	5.28E-05
Hexachlorobenzene	µg/L	--	--	--	1.85E-02
	lb/day	--	--	--	5.55E-04

PAHs	µg/L	--	--	--	7.74E-01
	lb/day	--	--	--	2.33E-02
PCBs	µg/L	--	--	--	1.67E-03
	lb/day	--	--	--	5.02E-05
TCDD equivalents	µg/L	--	--	--	3.43E-07
	lb/day	--	--	--	1.03E-08
Toxaphene	µg/L	--	--	--	1.85E-02
	lb/day	--	--	--	5.55E-04

[1] Scientific "E" notation is used to express certain values. In scientific "E" notation, the number following the "E" indicates that position of the decimal point in the value. Negative numbers after the "E" indicate that the value is less than 1, and positive numbers after the "E" indicate that the value is greater than 1. In this notation a value of 6.1E-02 represents 6.1×10^{-2} or 0.061, 6.1E+02 represents 6.1×10^{2} or 610, and 6.1E+00 represents 6.1×10^{0} or 6.1.

f. A summary of the performance goals is provided in the table below:

Table F-11. Summary of Performance Goals

Parameter	Unit	Performance Goals[1]			
		6-Month Median	Maximum Daily	Instantaneous Maximum	30-Day Average
BASED ON OBJECTIVES FOR PROTECTION OF MARINE AQUATIC LIFE					
Arsenic, Total Recoverable	µg/L	4.43E+02	2.56E+03	6.78E+03	--
	lb/day	1.33E+01	7.67E+01	2.04E+02	--
Cadmium, Total Recoverable	µg/L	8.80E+01	3.52E+02	8.80E+02	--
	lb/day	2.64E+00	1.06E+01	2.64E+01	--
Chromium VI, Total Recoverable[2]	µg/L	1.76E+02	7.04E+02	1.76E+03	--
	lb/day	5.28E+00	2.11E+01	5.28E+01	--
Lead, Total Recoverable	µg/L	1.76E+02	7.04E+02	1.76E+03	--
	lb/day	5.28E+00	2.11E+01	5.28E+01	--
Mercury, Total Recoverable	µg/L	3.48E+00	1.40E+01	3.52E+01	--
	lb/day	1.04E-01	4.21E-01	1.06E+00	--
Nickel, Total Recoverable	µg/L	4.40E+02	1.76E+03	4.40E+03	--
	lb/day	1.32E+01	5.28E+01	1.32E+02	--
Selenium, Total Recoverable	µg/L	1.32E+03	5.28E+03	1.32E+04	--
	lb/day	3.96E+01	1.59E+02	3.96E+02	--
Silver, Total Recoverable	µg/L	4.77E+01	2.32E+02	6.02E+02	--
	lb/day	1.43E+00	6.98E+00	1.81E+01	--
Zinc, Total Recoverable	µg/L	1.06E+03	6.34E+03	1.69E+04	--
	lb/day	3.19E+01	1.90E+02	5.08E+02	--
Cyanide, Total Recoverable[3]	µg/L	8.80E+01	3.52E+02	8.80E+02	--
	lb/day	2.64E+00	1.06E+01	2.64E+01	--
Ammonia (expressed as nitrogen)	µg/L	5.28E+04	2.11E+05	5.28E+05	--
	lb/day	1.59E+03	6.34E+03	1.59E+04	--

Parameter	Unit	Performance Goals[1]			
		6-Month Median	Maximum Daily	Instantaneous Maximum	30-Day Average
Acute Toxicity	TUa	--	2.91	--	--
Phenolic Compounds (non-chlorinated)	µg/L	2.64E+03	1.06E+04	2.64E+04	--
	lb/day	7.93E+01	3.17E+02	7.93E+02	--
Chlorinated Phenolics	µg/L	8.80E+01	3.52E+02	8.80E+02	--
	lb/day	2.64E+00	1.06E+01	2.64E+01	--
Endosulfan	µg/L	7.92E-01	1.58E+00	2.38E+00	--
	lb/day	2.38E-02	4.76E-02	7.13E-02	--
Radioactivity	pci/l	Not to exceed limits specified in Title 17, Division 1, Chapter 5, Subchapter 4, Group 3, Article 3, section 30253 of the California Code of Regulations, Reference to section 30253 is prospective, including future changes to any incorporated provisions of federal law, as the changes take effect.			
OBJECTIVES FOR PROTECTION OF HUMAN HEALTH – NONCARCINOGENS					
Acrolein	µg/L	--	--	--	1.94E+04
	lb/day	--	--	--	5.81E+02
Antimony	µg/L	--	--	--	1.06E+05
	lb/day	--	--	--	3.17E+03
Bis(2-chloroethoxy) Methane	µg/L	--	--	--	3.87E+02
	lb/day	--	--	--	1.16E+01
Bis(2-chloroisopropyl) Ether	µg/L	--	--	--	1.06E+05
	lb/day	--	--	--	3.17E+03
Chlorobenzene	µg/L	--	--	--	5.02E+04
	lb/day	--	--	--	1.51E+03
Chromium (III), Total Recoverable	µg/L	--	--	--	1.67E+07
	lb/day	--	--	--	5.02E+05
Di-n-butyl Phthalate	µg/L	--	--	--	3.08E+05
	lb/day	--	--	--	9.25E+03
Dichlorobenzenes	µg/L	--	--	--	4.49E+05
	lb/day	--	--	--	1.35E+04
Diethyl Phthalate	µg/L	--	--	--	2.90E+06
	lb/day	--	--	--	8.72E+04
Dimethyl Phthalate	µg/L	--	--	--	7.22E+07
	lb/day	--	--	--	2.17E+06
4,6-dinitro-2-methylphenol	µg/L	--	--	--	1.94E+04
	lb/day	--	--	--	5.81E+02
2,4-dinitrophenol	µg/L	--	--	--	3.52E+02
	lb/day	--	--	--	1.06E+01
Ethylbenzene	µg/L	--	--	--	3.61E+05
	lb/day	--	--	--	1.08E+04

Parameter	Unit	Performance Goals[1]			
		6-Month Median	Maximum Daily	Instantaneous Maximum	30-Day Average
Fluoranthene	µg/L	--	--	--	1.32E+03
	lb/day	--	--	--	3.96E+01
Hexachlorocyclopentadiene	µg/L	--	--	--	5.10E+03
	lb/day	--	--	--	1.53E+02
Nitrobenzene	µg/L	--	--	--	4.31E+02
	lb/day	--	--	--	1.29E+01
Thallium, Total Recoverable	µg/L	--	--	--	1.76E+02
	lb/day	--	--	--	5.28E+00
Toluene	µg/L	--	--	--	7.48E+06
	lb/day	--	--	--	2.25E+05
Tributyltin	µg/L	--	--	--	1.23E-01
	lb/day	--	--	--	3.70E-03
1,1,1-trichloroethane	µg/L	--	--	--	4.75E+07
	lb/day	--	--	--	1.43E+06
BASED ON OBJECTIVES FOR PROTECTION OF HUMAN HEALTH - CARCINOGENS					
Acrylonitrile	µg/L	--	--	--	8.80E+00
	lb/day	--	--	--	2.64E-01
Benzene	µg/L	--	--	--	5.19E+02
	lb/day	--	--	--	1.56E+01
Benzidine	µg/L	--	--	--	6.07E-03
	lb/day	--	--	--	1.82E-04
Bis(2-chloroethyl) Ether	µg/L	--	--	--	3.96E+00
	lb/day	--	--	--	1.19E-01
Bis(2-ethlyhexyl) Phthalate	µg/L	--	--	--	3.08E+02
	lb/day	--	--	--	9.25E+00
Carbon Tetrachloride	µg/L	--	--	--	7.92E+01
	lb/day	--	--	--	2.38E+00
Chlordane	µg/L	--	--	--	2.02E-03
	lb/day	--	--	--	6.08E-05
Chlorodibromomethane (aka Dibromochloromethane)	µg/L	--	--	--	7.57E+02
	lb/day	--	--	--	2.27E+01
Chloroform	µg/L	--	--	--	1.14E+04
	lb/day	--	--	--	3.43E+02
DDT	µg/L	--	--	--	1.50E-02
	lb/day	--	--	--	4.49E-04
1,4-dichlorobenzene	µg/L	--	--	--	1.58E+03
	lb/day	--	--	--	4.76E+01

Parameter	Unit	Performance Goals[1]			
		6-Month Median	Maximum Daily	Instantaneous Maximum	30-Day Average
3,3'-dichlorobenzidine	µg/L	--	--	--	7.13E-01
	lb/day	--	--	--	2.14E-02
1,2-dichloroethane	µg/L	--	--	--	2.46E+03
	lb/day	--	--	--	7.40E+01
1,1-dichloroethylene	µg/L	--	--	--	7.92E+01
	lb/day	--	--	--	2.38E+00
Dichlorobromomethane	µg/L	--	--	--	5.46E+02
	lb/day	--	--	--	1.64E+01
Dichloromethane (aka Methylene Chloride)	µg/L	--	--	--	3.96E+04
	lb/day	--	--	--	1.19E+03
1,3-dichloropropene (aka 1,3-Dichloropropylene)	µg/L	--	--	--	7.83E+02
	lb/day	--	--	--	2.35E+01
2,4-dinitrotoluene	µg/L	--	--	--	2.29E+02
	lb/day	--	--	--	6.87E+00
1,2-diphenylhydrazine	µg/L	--	--	--	1.41E+01
	lb/day	--	--	--	4.23E-01
Halomethanes	µg/L	--	--	--	1.14E+04
	lb/day	--	--	--	3.43E+02
Hexachlorobutadiene	µg/L	--	--	--	1.23E+03
	lb/day	--	--	--	3.70E+01
Hexachloroethane	µg/L	--	--	--	2.20E+02
	lb/day	--	--	--	6.61E+00
Isophorone	µg/L	--	--	--	6.42E+04
	lb/day	--	--	--	1.93E+03
N-nitrosodimethylamine	µg/L	--	--	--	6.42E+02
	lb/day	--	--	--	1.93E+01
N-nitrosodi-N-propylamine	µg/L	--	--	--	3.34E+01
	lb/day	--	--	--	1.00E+00
N-nitrosodiphenylamine	µg/L	--	--	--	2.20E+02
	lb/day	--	--	--	6.61E+00
1,1,2,2-tetrachloroethane	µg/L	--	--	--	2.02E+02
	lb/day	--	--	--	6.08E+00
Tetrachloroethylene (aka Tetrachloroethene)	µg/L	--	--	--	1.76E+02
	lb/day	--	--	--	5.28E+00
Trichloroethylene (aka Trichloroethene)	µg/L	--	--	--	2.38E+03
	lb/day	--	--	--	7.13E+01
1,1,2-trichloroethane	µg/L	--	--	--	8.27E+02
	lb/day	--	--	--	2.48E+01

Parameter	Unit	Performance Goals[1]			
		6-Month Median	Maximum Daily	Instantaneous Maximum	30-Day Average
2,4,6-trichlorophenol	µg/L	--	--	--	2.55E+01
	lb/day	--	--	--	7.66E-01
Vinyl Chloride	µg/L	--	--	--	3.17E+03
	lb/day	--	--	--	9.51E+01

[1] Scientific "E" notation is used to express certain values. In scientific "E" notation, the number following the "E" indicates that position of the decimal point in the value. Negative numbers after the "E" indicate that the value is less than 1, and positive numbers after the "E" indicate that the value is greater than 1. In this notation a value of 6.1E-02 represents 6.1×10^{-2} or 0.061, 6.1E+02 represents 6.1×10^{2} or 610, and 6.1E+00 represents 6.1×10^{0} or 6.1.

[2] Dischargers may, at their option, meet this limitation (or apply this performance goal) as a total chromium limitation (or performance goal).

[3] If a Discharger can demonstrate to the satisfaction of the San Diego Water Board (subject to USEPA approval) that an analytical method is available to reliably distinguish between strongly and weakly complexed cyanide, effluent limitations for cyanide may be met by (or performance goals may be evaluated with) the combined measurement of free cyanide, simple alkali metals cyanides, and weakly complexed organometallic cyanide complexes. In order for the analytical method to be acceptable, the recovery of free cyanide from metal complexes must be comparable to that achieved by the approved method in 40 CFR Part 136, as revised May 14, 1999.

5. Whole Effluent Toxicity (WET)

a. Implementing provisions at section III.C of the Ocean Plan require chronic toxicity monitoring for ocean waste discharges with a minimum initial dilution factor below 100:1. In addition, the effluent limitation has been carried over from Order No. R9-2008-0096 for chronic toxicity, thus monitoring is required. Based on methods of the California Ocean Plan, a maximum daily effluent limitation of 145 TUc is established in the Order and monthly monitoring is carried over from Order No. R9-2008-0096.

b. Order No. R9-2008-0096 required acute toxicity testing in addition to chronic toxicity monitoring. The RPA for acute toxicity for Order No. R9-2008-0096 and this Order resulted in Endpoint 2, and an effluent limitation for acute toxicity is not required. Further, the Ocean Plan does not require acute toxicity monitoring for dischargers with a minimum initial dilution factor less than 100:1. The Discharger has been granted a dilution ratio of 87:1 at Discharge Point No. 001. However, due to the new discharge (brine from the AWT), the existing performance goal for acute toxicity are being carried over to this Order. Monitoring for acute toxicity has been reduced from monthly to quarterly and should provide sufficient data to determine reasonable potential during the next NPDES Permit reissiuance.

D. Final Effluent Limitation Considerations

1. Anti-Backsliding Requirements

Consistent with the anti-backsliding requirements discussed in section III.C.5, all effluent limitations in this Order are at least as stringent as the effluent limitations in Order No. R9-2008-0096.

2. Antidegradation Policies

Consistent with the anti-backsliding requirements discussed in section III.C.4, the technology-based effluent limitations and WQBELs are at least as stringent as the previous effluent limitations contained in in Order No. R9-2008-0096, and no degradation of the receiving water is expected.

3. Stringency of Requirements for Individual Pollutants

This Order contains both technology-based and WQBELs for individual pollutants. The technology-based effluent limitations consist of restrictions on BOD_5, TSS, oil and grease, settleable solids, turbidity, and pH. Restrictions on BOD_5, TSS, oil and grease, settleable solids, turbidity, and pH are discussed in section IV.B of this Fact Sheet. This Order's technology-based pollutant restrictions implement the minimum, applicable federal technology-based requirements. These limitations are not more stringent than required by the CWA.

WQBELs have been derived to implement water quality objectives that protect beneficial uses. Both the beneficial uses and the water quality objectives have been approved pursuant to federal law and are the applicable federal water quality standards. The procedures for calculating the individual WQBELs are based on the Ocean Plan, which was approved by USEPA on October 8, 2010. All beneficial uses and water quality objectives contained in the Basin Plan were approved under state law and submitted to and approved by USEPA prior to May 30, 2000. Any water quality objectives and beneficial uses submitted to USEPA prior to May 30, 2000, but not approved by USEPA before that date, are nonetheless "applicable water quality standards for purposes of the CWA" pursuant to 40 CFR Part 131.21(c)(1). Collectively, this Order's restrictions on individual pollutants are no more stringent than required to implement the requirements of the CWA.

E. Interim Effluent Limitations – not applicable

F. Land Discharge Specifications – not applicable

G. Recycling Specifications – not applicable

V. RATIONALE FOR RECEIVING WATER LIMITATIONS

Receiving water limitations of this Order are derived from the water quality objectives for ocean waters established by the Basin Plan and the Ocean Plan.

Prior to this Order, the San Diego Water Board has interpreted the Bacterial Characteristics Water-contact Standards of the Ocean Plan (Receiving Water Limitations section V.A.1) to apply only in the zone bounded by the shoreline and a distance 1,000 feet from the shoreline or the 30-foot depth contour, whichever is further from the shoreline, and within kelp beds. The 2012 Ocean Plan provides that these Bacteriological Standards also apply in designated areas outside this zone used for water contact sports, as determined by the Regional Water Boards (i.e., all waters designated with the REC-1 beneficial use). These designated areas must be specifically defined in the Basin Plan. Because the San Diego Water Board has not completed a process to designate specific ocean water areas where the water contact Bacteriological Standards apply and do not apply, the Ocean Plan Bacterial Standards apply throughout State of California territorial marine waters in the San Diego Region, which extend from surface to bottom, out to three nautical miles from the shoreline. This interpretation has been confirmed by the USEPA.

As stated in section II.B of this Fact Sheet, discharges to the Oceanside OO include effluent from Fallbrook Public Utility District, Genentech, City of Oceanside, and the Discharger. Effluent discharging to the Oceanside OO must not cause or contribute to excursions of Bacterial Characteristics Water-contact Standards contained in the Ocean Plan. Order No. R9-2011-0016, Waste Discharge Requirements for the City of Oceanside San Luis Rey Water Reclamation Facility, La Salina Wastewater Treatment Plant, and Mission Basin Desalting Facility Discharges to the Pacific Ocean Via the Oceanside OO, includes a Time Schedule to ensure compliance with the Bacterial Characteristics Water-contact Standards.

On July 10, 2012, the City of Oceanside submitted the Analysis and Compliance Plan to meet Task 2 of the Time Schedule (Plan) contained in Order No. R9-2011-0016. The Plan states that the effluent from the Discharger and Fallbrook Public Utility District contributes relatively low concentrations of pathogen indicator organisms and has low permitted flows as compared to the City of Oceanside's effluent discharges. As a result, the Plan concludes that the disinfection of the effluent from the Discharger and Fallbrook Public Utility District would not provide the required degree of pathogen removal in the Oceanside OO discharge needed to fully comply with Ocean Plan Bacteriological Standards in the receiving water. The Plan goes on to state that, as a supplement to the City of Oceanside's proposed pathogen reduction strategy to disinfect effluent from the City of Oceanside's San Luis Rey Water Reclamation Facility, the City of Oceanside through its contractual discharge agreements with the Discharger and Fallbrook Public Utility District may pursue requiring these agencies to also reduce effluent pathogen concentrations in their respective Oceanside OO discharges.

VI. RATIONALE FOR PROVISIONS

A. Standard Provisions

Standard Provisions, which apply to all NPDES permits in accordance with 40 CFR Part 122.41, and additional conditions applicable to specified categories of permits in accordance with 40 CFR Part 122.42, are provided in Attachment D to the Order.

Parts 122.41(a)(1) and (b) through (n) of 40 CFR establish conditions that apply to all State-issued NPDES permits. These conditions must be incorporated into the permits either

expressly or by reference. If incorporated by reference, a specific citation to the regulations must be included in the Order. Part 123.25(a)(12) of 40 CFR allows the state to omit or modify conditions to impose more stringent requirements. In accordance with 40 CFR Part 123.25, this Order omits federal conditions that address enforcement authority specified in 40 CFR Parts 122.41(j)(5) and (k)(2) because the enforcement authority under the Water Code is more stringent. In lieu of these conditions, this Order incorporates by reference Water Code section 13387(e).

B. Special Provisions

1. Reopener Provisions

This Order may be reopened and modified, revoked and reissued, or terminated in accordance with the provisions of 40 CFR Parts 122, 123, 124, and 125. The San Diego Water Board may reopen the permit to modify permit conditions and requirements. Causes for modifications include, but are not limited to, the promulgation of new regulations, modification in sludge use or disposal practices, or adoption of new regulations by the State Water Board or the San Diego Water Board, including revisions to the Basin Plan.

2. Special Studies and Additional Monitoring Requirements

a. Spill Prevention and Response Plans

The CWA largely prohibits any discharge of pollutants from point sources to waters of the United States except as authorized under an NPDES permit. In general, any point source discharge of sewage effluent to waters of the United States must comply with technology-based, secondary treatment standards, at a minimum, and any more stringent requirements necessary to meet applicable water quality standards and other requirements. The unpermitted discharge of wastewater to waters of the United States is illegal under the CWA. Further, the Basin Plan prohibits discharges of waste to land, except as authorized by WDRs or the terms described in CWC section 13264. The Basin Plan also prohibits the unauthorized discharge of treated or untreated sewage to waters of the State or to a storm water conveyance system. Further, Discharge Prohibition III.A of the Order prohibits the discharge of waste from the SRTTP and/or AWT to a location other than Discharge Point No. 001.

Sanitary collection and treatment systems experience periodic failures resulting in discharges that may affect waters of the State. There are many factors which may affect the likelihood of a spill. To ensure appropriate funding, management, and planning to reduce the likelihood of a spill, and increase the spill preparedness, this Order requires the Discharger to maintain and implement Spill Prevention and Response Plans.

b. Spill Reporting Requirements

To determine compliance with Discharge Prohibition III.A and provide appropriate notification to the general public for the protection of public health, spill reporting requirements have been established in section VI.C.2.b of this Order.

c. Whole Effluent Toxicity (WET)

Implementing provisions at section III.C.4.c.(4) of the Ocean Plan require chronic toxicity monitoring for ocean waste discharges with minimum initial dilution factors less than 100:1 for the protection of beneficial uses of ocean waters. Based on methods of the California Ocean Plan, a chronic toxicity effluent limitation of 145 TUc is established in this Order. In addition, the San Diego Water Board is including an acute toxicity performance goal of 26.4 TUa. The monthly monitoring for chronic and quarterly monitoring for acute toxicity from Order No. R9-2008-0096 has been carried over to this Order.

This Order requires the Discharger to develop a Toxicity Reduction Evaluation (TRE) workplan, and submit the TRE workplan within 180 days of the effective date of this Order. The workplan shall describe steps the Discharger intends to follow if the effluent limitation for chronic toxicity (145 TUc) is exceeded or if the performance goal for acute toxicity (26.4 TUa) is exceeded.

If the effluent limitation for chronic and/or performance goal for acute toxicity is exceeded, then within 15 days of the receipt of these test results, the Discharger shall begin conducting six additional tests, bi-weekly, over a 12 week period. If the toxicity effluent limitation/ performance goal is exceeded in any of these six additional tests, then the Discharger shall notify the San Diego Water Board. If the San Diego Water Board determines that the discharge consistently exceeds the toxicity effluent limitation/ performance goal, then the Discharger shall initiate a TRE/ Toxicity Identification Evaluation (TIE) in accordance with the TRE workplan, Toxicity Reduction Evaluation Guidance for Municipal Wastewater Treatment Plants (USEPA 833-B-99-002, 1999), and USEPA TIE guidance documents (Phase I, EPA/600/6-91/005F, 1992; Phase II, EPA/600/R-92/080, 1993; and Phase III, EPA/600/R-92/081, 1993). If no toxicity is detected in any of these additional six tests, then the Discharger may return to the testing frequency specified in the MRP.

3. Best Management Practices and Pollution Prevention – Not Applicable

4. Construction, Operation, and Maintenance Specifications – Not Applicable

5. Special Provisions for Municipal Facilities (Wastewater Facilities Only)

a. Treatment Plant Capacity

Order No. R9-2008-0096 required the Discharger to submit a written report to the Executive Officer within 90 days after the monthly average influent flow rate equals or exceeds 75 percent of the secondary treatment design capacity of the SRTTP. In lieu of a written report for each time the monthly average influent flow rate equals or exceeds 75 percent of the secondary treatment design capacity, the requirement has been changed to require the report be submitted four years prior to the time wastewater flow are projected to reach plant capacity, as stated in Title 23, Division 3, Chapter 9, Article 2, section 2232 of the California Code of Regulations (CCR). The revised requirement states:

> Four years prior to reaching the SRTTP design capacity, the Discharger shall submit a SRTTP Capacity report to the San Diego Water Board showing how flow volumes will be prevented from exceeding existing capacity or how capacity will be increased. A notification and copy of the report shall be sent to all appropriate Marine Corps Base Camp Pendleton personnel and local permitting agencies, if any.

If the San Diego Water Board finds that the technical report indicates adequate steps are not being taken to address the capacity problem, the San Diego Water Board will adopt a time schedule order or other enforcement order. Such action will be preceded by notice and a hearing.

b. Source Control Program Requirements

A source control program is necessary to prevent the introduction of pollutants, which will interfere with treatment plant operations or sludge disposal, and prevent pass through of pollutants that exceed water quality objectives, standards or permit limitations. The Source Control Program requirements are carried over from Order No. R9-2008-0096.

c. Sludge (Biosolids) Disposal Requirements

The use and disposal of biosolids is regulated under federal and State laws and regulations, including permitting requirements and technical standards included in 40 CFR Part 503. The Discharger is required to comply with the standards and time schedules contained in 40 CFR Part 503.

Title 27, Division 2, Subdivision 1, commencing with section 20005 of the CCR establishes approved methods for the disposal of collected screenings, residual sludge, biosolids, and other solids removed from liquid wastes. Requirements to ensure the Discharger disposes of solids in compliance with State and federal regulations have been included in this Order.

d. Sanitary Sewer System Requirements

Sanitary sewer overflows (SSOs) often contain high levels of suspended solids, pathogenic organisms, toxic pollutants, nutrients, oxygen-demanding organic compounds, oil and grease and other pollutants. SSOs may cause a public nuisance, particularly when raw untreated wastewater is discharged to areas with high public exposure, such as streets or surface waters used for drinking, fishing, or body contact recreation. SSOs may pollute surface or ground waters, threaten public health, adversely affect aquatic life, and impair the recreational use and aesthetic enjoyment of surface waters.

Minimum requirements to reduce, eliminate, and prevent SSOs are established as a condition of this Order and are included in Attachment H. Minimum SSO monitoring and reporting requirements have been established in Attachment E to this Order.

6. Other Special Provisions - Responsibilities, Liabilities, Legal Action, Penalties

Special provisions regarding responsibilities, liabilities, legal action, and penalties have been carried over from Order No. R9-2008-0096.

7. Compliance Schedules

As stated in section V of this Fact Sheet, this Order requires compliance with receiving water bacterial objectives in ocean water areas designated for contact water recreation (REC-1) beneficial use, surface to bottom, extending three nautical miles into the Pacific Ocean from the shoreline, based on the requirements in the 2012 California Ocean Plan and the San Diego Water Board Basin Plan. Also, as stated in section V of this Fact Sheet, according to the City of Oceanside's July 2012 Analysis and Compliance Plan, the Discharger currently contributes relatively low concentrations of pathogen indicator organisms as compared to the City of Oceanside's effluent discharges and thus disinfection of the effluent from the Discharger would not provide the required degree of pathogen removal to fully comply with Ocean Plan bacterial objectives in the receiving water surrounding the shared Oceanside OO. If, however, there are new or modified facilities or processes that affect the quality of the effluent from the Discharger, the effluent from the Discharger may cause or contribute to violations of the bacterial characteristics in the receiving waters outside of the initial dilution zone of the Oceanside OO. To account for any potential changes to the bacterial characteristics in the Discharger's effluent, the Discharger is required to evaluate the impact of such discharge on the bacterial characteristics receiving water limitations as contained in Section V.A.1 of this permit and (if needed) to submit a time schedule that outlines the tasks and approaches to achieve full compliance with the bacterial characteristics receiving water limitations.

VII. RATIONALE FOR MONITORING AND REPORTING REQUIREMENTS

Part 122.48 of 40 CFR requires that all NPDES permits specify requirements for recording and reporting monitoring results. Water Code sections 13267 and 13383 authorize the San Diego Water Board to require technical and monitoring reports. The Monitoring and Reporting Program (MRP), Attachment E of this Order, establishes monitoring and reporting requirements that implement federal and state requirements. The following provides the rationale for the monitoring and reporting requirements contained in the MRP for this facility.

A. Influent Monitoring

Influent monitoring is required to determine the effectiveness of the source control program, to assess the performance of treatment facilities, and to evaluate compliance with effluent limitations.

Influent monitoring requirements have been carried over from Order No. R9-2008-0096, with the exception of oil and grease. Oil and grease monitoring has been reduced from weekly to monthly, as requested by the Discharger. Influent oil and grease concentrations measured by the Discharger during the previous order are consistent with oil and grease concentrations in untreated domestic wastewater. Also, the SRTTP effluent has been meeting the effluent limitations for oil and grease.

B. Effluent Monitoring

Effluent monitoring is required to determine compliance with the permit conditions and to identify operational problems and improve plant performance. Effluent monitoring also provides information on wastewater characteristics and flows for use in interpreting water quality and biological data.

Most of the effluent monitoring requirements have been carried over from Order No. R9-2008-0096.

Effluent monitoring for arsenic, cadmium, chromium (VI), lead, mercury, nickel, selenium, silver, zinc, cyanide, nonchlorinated phenolic compounds, chlorinated phenolic compounds, endosulfan, and radioactivity has been reduced from quarterly to semiannually. Consistent with the findings for Order No. R9-2008-0096, there was no reasonable potential for any of these parameters to exceed Ocean Plan objectives.

As explained in section IV.C.3 of this Fact Sheet, effluent limitations for copper, Endrin, HCH, aldrin, beryllium, dieldrin, heptachlor, heptachlor epoxide, hexachlorobenzene, PAHs, PCBs, TCDD equivalents, and toxaphene have been carried over from Order No. R9-2008-0096. Quarterly monitoring has been established for these parameters to assess compliance with the effluent limitations.

Oil and grease effluent monitoring has been reduced from weekly to monthly. Effluent monitoring for oil and grease during this past permit cycle has consistently been below the effluent limitation. Also, monthly monitoring for oil and grease is consistent with monitoring requirements for other wastewater treatment plants.

C. Whole Effluent Toxicity (WET) Testing Requirements

WET testing (acute and chronic) has been established to determine compliance with the effluent limitation for chronic toxicity, and the performance goal for acute toxicity. Acute toxicity monitoring has been reduced from monthly to quarterly. Consistent with the findings for Order No. R9-2008-0096, there was no reasonable potential for acute toxicity to exceed Ocean Plan objectives. Monthly monitoring for chronic toxicity has been carried over from Order No. R9-2008-0096. Although reasonable potential was not determined for chronic toxicity for Order No. R9-2008-0096 and this Order, to account for any synergistic effects in the combined effluent from SRTTP and AWT that might not be apparent in the limited effluent data from the AWT, monthly monitoring is required for at least a year. If, however, after the

first year of monthly monitoring, the San Diego Water Board Executive Officer determines that the effluent complies with the effluent limitation for chronic toxicity at section IV.A.1., Table 4 of this Order, written notification to decrease the minimum test frequency for chronic toxicity from monthly to quarterly shall be granted by the San Diego Water Board Executive Officer.

D. Receiving Water Monitoring - Surface Water

1. Microbiological (Near Shore and Off Shore)

The near shore and off shore water quality sampling program is designed to help evaluate the fate of the wastewater plume under various conditions and to determine if the Ocean Plan standards are being a negatively impacted by the discharge. Further, bacterial sampling is required to provide data to help track the wastewater plume in the offshore waters, to evaluate compliance with recreational water standards in the kelp beds, and to address issues of beach water quality at the shoreline stations.

Monitoring requirements, consistent with other major Oceanside OO dischargers, have been established, including the intensive monitoring period.

2. Benthic Monitoring

Sediment and infauna monitoring is required to help evaluate the potential effects of the discharge on the physical and chemical properties of the sediment and biological communities in the vicinity of the discharge.

Monitoring requirements, consistent with other major Oceanside OO dischargers, have been established, including the intensive monitoring period.

3. Fish and Invertebrate

Fish and invertebrate monitoring is required to assess the effects of the discharge on local fish and megabenthic invertebrate communities in the surrounding area of the discharge location.

Monitoring requirements, consistent with other major Oceanside OO dischargers, have been established, including the intensive monitoring period.

E. Other Monitoring Requirements

1. Kelp Bed Monitoring

Kelp bed monitoring is intended to assess the extent to which the discharge of wastes may affect the aerial extent and health of coastal kelp beds. The aerial extent of the various kelp beds photographed in each survey will provide a baseline for future monitoring to help evaluate any significant and persistent losses to the kelp beds.

2. Regional Monitoring

Participation in an approved regional monitoring and assessment program, as directed by the Executive Officer, is required pursuant to Water Code sections 13267 and 13383, and 40 CFR 122.48. The intent of regional monitoring and assessment activities is to

maximize the efforts of all monitoring partners using a more cost-effective monitoring design and to best utilize the pooled scientific resources of the region. Regional monitoring and assessment differs from the routine receiving water monitoring program required under Attachment E, section VIII of this Order in that it is designed to address specific research or management issues associated with the discharge of wastewater that are not addressed by the routine receiving water monitoring conducted in the immediate area around the ocean outfall. The regional monitoring and assessment provides a more comprehensive picture to describe the ecological and statistical significance of monitoring results and to assess the cumulative impacts of various pollution sources.

The regional monitoring and assessment program must be approved by the Executive Officer and utilize the San Diego Water Board's approach detailed in *A Framework for Monitoring and Assessment in the San Diego Region* (November 2012) to:

1. Determine the status and trends of conditions in ocean waters with regard to beneficial uses, e.g.
   a. Are fish and shellfish safe to eat?
   b. Is water quality safe for swimming?
   c. Are ecosystems healthy?
2. Identify the stressors causing / contributing to conditions of concern;
3. Identify the sources of the stressors causing / contributing to conditions of concern; and
4. Evaluate the effectiveness (i.e., environmental outcomes) of actions taken to address such stressors and sources.

3. Solids Monitoring

The Discharger is required to monitor solids generated at SRTTP pursuant to 40 CFR Part 503.

4. Sanitary Sewer Overflow

Reporting sanitary sewer overflows is required by this Order and the attached Monitoring and Reporting Program (Attachment E) to assure compliance with the attached Sanitary Sewer System Requirements (Attachment H).

VIII. PUBLIC PARTICIPATION

The San Diego Water Board has considered the issuance of WDRs that will serve as an NPDES permit for SRTTP and AWT. As a step in the WDR adoption process, the San Diego Water Board staff has developed tentative WDRs and has encouraged public participation in the WDR adoption process.

A. Notification of Interested Parties

The San Diego Water Board notified the Discharger and interested agencies and persons of its intent to prescribe WDRs for the discharge and provided an opportunity to submit written comments and recommendations. Notification was published in the San Diego Union Tribune on September 6, 2013 and posted on the San Diego Water Board web site on September 6, 2013.
The public had access to the agenda and any changes in dates and locations through the San Diego Water Board's web site at:
http://www.waterboards.ca.gov/sandiego/board_info/agendas/

B. Written Comments

Interested persons were invited to submit written comments concerning tentative WDR's as provided through the notification process. Comments were due either in person or by mail to the Executive Office at the San Diego Water Board at Regional Water Quality Control Board,2375 Northside Drive, Suite 100, San Diego, CA 92108.

To be fully responded to by staff and considered by the San Diego Water Board, the written comments were due at the San Diego Water Board office by 5:00 p.m. on October 7, 2013.

C. Public Hearing

The San Diego Water Board held a public hearing on the tentative WDRs during its regular Board meeting on the following date and time and at the following location:

Date:	November 13, 2013
Time:	9:00 AM
Location:	Regional Water Quality Control Board Board Meeting Room 2375 Northside Drive, Suite 100, San Diego, CA 92108

The date, time, and location are subject to change. Please visit the following web site for up-to-date information on the public hearing:
http://www.waterboards.ca.gov/sandiego/board_info/agendas/

Interested persons were invited to attend. At the public hearing, the San Diego Water Board heard testimony, pertinent to the discharge, WDRs, and permit. For accuracy of the record, important testimony was requested in writing.

D. Reconsideration of Waste Discharge Requirements

Any aggrieved person may petition the State Water Board to review the decision of the San Diego Water Board regarding the final WDRs. The petition must be received by the State Water Board at the following address within 30 calendar days of the San Diego Water Board's action.

State Water Resources Control Board
Office of Chief Counsel
P.O. Box 100, 1001 I Street
Sacramento, CA 95812-0100
For instructions on how to file a petition for review, see:
http://www.waterboards.ca.gov/public_notices/petitions/water_quality/wqpetition_instr.shtml

E. Information and Copying

The Report of Waste Discharge, other supporting documents, and comments received are on file and may be inspected at 2375 Northside Drive, Suite 100 San Diego, CA 92108 at any time between 8:30 a.m. and 4:45 p.m., Monday through Friday. Copying of documents may be arranged through the San Diego Water Board by calling 858-467-2952.

F. Register of Interested Persons

Any person interested in being placed on the mailing list for information regarding the WDR's and NPDES permit should contact the San Diego Water Board, reference this facility, and provide a name, address, and phone number.

G. Additional Information

Requests for additional information or questions regarding this Order should be directed to Joann Lim at 619-521-3362 or Joann.Lim@waterboards.ca.gov.

ATTACHMENT G – OCEAN PLAN AND BASIN PLAN PROHIBITIONS

I. Ocean Plan Discharge Prohibitions

1. The Discharge of any radiological chemical, or biological warfare agent or high-level radioactive waste into the ocean is prohibited.

2. Waste shall not be discharged to designated Areas of Special Biological Significance except as provided in Chapter III.E. of the Ocean Plan.

3. Pipeline discharge of sludge to the ocean is prohibited by federal law; the discharge of municipal and industrial waste sludge directly to the ocean, or into a waste stream that discharges to the ocean, is prohibited. The discharge of sludge digester supernatant directly to the ocean, or to a waste stream that discharges to the ocean without further treatment, is prohibited.

4. The by-passing of untreated wastes containing concentrations of pollutants in excess of those of Table 2 or Table 1 [of the Ocean Plan] is prohibited.

II. Basin Plan Discharge Prohibitions[1]

1. The discharge of waste to waters of the State in a manner causing, or threatening to cause a condition of pollution, contamination or nuisance as defined in Water Code section 13050, is prohibited.

2. The discharge of waste to land, except as authorized by WDRs or the terms described in Water Code section 13264 is prohibited.

3. The discharge of pollutants or dredged or fill material to waters of the United States except as authorized by an NPDES permit or a dredged or fill material permit (subject to the exemption described in Water Code section 13376) is prohibited.

4. Discharges of recycled water to lakes or reservoirs used for municipal water supply or to inland surface water tributaries thereto are prohibited, unless this San Diego Water Board issues an NPDES permit authorizing such a discharge; the proposed discharge has been approved by the State of California Department of Public Health and the operating agency of the impacted reservoir; and the discharger has an approved fail-safe long-term disposal alternative.

5. The discharge of waste to inland surface waters, except in cases where the quality of the discharge complies with applicable receiving water quality objectives, is prohibited. Allowances for dilution may be made at the discretion of the San Diego Water Board. Consideration would include streamflow data, the degree of treatment provided and safety measures to ensure reliability of facility performance. As an example, discharge of secondary effluent would probably be permitted if streamflow provided 100:1 dilution capability.

6. The discharge of waste in a manner causing flow, ponding, or surfacing on lands not owned or under the control of the discharger is prohibited, unless the discharge is authorized by the San Diego Water Board.

[1] Where the Basin Plan prohibitions refer specifically to discharges to waters of the state, the prohibitions apply to the extent permitted by federal law.

7. The dumping, deposition, or discharge of waste directly into waters of the State, or adjacent to such waters in any manner which may permit its being transported into the waters, is prohibited unless authorized by the San Diego Water Board.

8. Any discharge to a storm water conveyance system that is not composed entirely of storm water is prohibited unless authorized by the San Diego Water Board. [The federal regulations, 40 CFR 122.26(b)(13), define storm water as storm water runoff, snow melt runoff, and surface runoff and drainage. 40 CFR 122.26(b)(2) defines an illicit discharge as any discharge to a storm water conveyance system that is not composed entirely of storm water except discharges pursuant to an NPDES permit and discharges resulting from firefighting activities.] [Section 122.26 amended at 56 FR 56553, November 5, 1991; 57 FR 11412, April 2, 1992].

9. The unauthorized discharge of treated or untreated sewage to waters of the State or to a storm water conveyance system is prohibited.

10. The discharge of industrial wastes to conventional septic tank/ subsurface disposal systems, except as authorized by the terms described in Water Code section 13264, is prohibited.

11. The discharge of radioactive wastes amenable to alternative methods of disposal into the waters of the State is prohibited.

12. The discharge of any radiological, chemical, or biological warfare agent into waters of the State is prohibited.

13. The discharge of waste into a natural or excavated site below historic water levels is prohibited unless the discharge is authorized by the San Diego Water Board.

14. The discharge of sand, silt, clay, or other earthen materials from any activity, including land grading and construction, in quantities which cause deleterious bottom deposits, turbidity or discoloration in waters of the State or which unreasonably affect, or threaten to affect, beneficial uses of such waters is prohibited.

ATTACHMENT H – SANITARY SEWER SYSTEM REQUIREMENTS

I. Basin Plan Discharge Prohibitions

Any sanitary sewer overflow (SSO) from a sanitary sewer system at any point upstream of a sewage treatment plant is prohibited to the extent permitted by federal law.

II. PROVISIONS

A. The Discharger shall take all feasible steps to eliminate SSOs. In the event that an SSO does occur, the Discharger shall take all feasible steps to contain and mitigate the impacts of an SSO.

B. In the event of an SSO, the Discharger shall take all feasible steps to prevent untreated or partially treated wastewater from discharging from storm drains into flood control channels or waters of the United States by blocking the storm drainage system and by removing the wastewater from the storm drains.

C. All SSOs must be reported in accordance with Attachment E, Section IX.D, of this Order.

D. In any enforcement action, the State and/or San Diego Water Board will consider the appropriate factors under the duly adopted State Water Board Enforcement Policy. And, consistent with the Enforcement Policy, the State and/or San Diego Water Board must consider the Discharger's efforts to contain, control, and mitigate SSOs when considering the California Water Code Section 13327 factors. In assessing these factors, the State and/or San Diego Water Board will also consider whether:

1. The Discharger has complied with the requirements of this Order, including requirements for reporting and developing and implementing a Sewer System Management Plan (SSMP);

2. The Discharger can identify the cause or likely cause of the discharge event;

3. There were no feasible alternatives to the discharge, such as temporary storage or retention of untreated wastewater, reduction of inflow and infiltration, use of adequate backup equipment, collecting and hauling of untreated wastewater to a treatment facility, or an increase in the capacity of the system as necessary to contain the design storm event identified in the SSMP. It is inappropriate to consider the lack of feasible alternatives, if the Discharger does not implement a periodic or continuing process to identify and correct problems.

4. The discharge was exceptional, unintentional, temporary, and caused by factors beyond the reasonable control of the Discharger;

5. The discharge could have been prevented by the exercise of reasonable control described in a certified SSMP for:

   a. Proper management, operation, and maintenance;
   b. Adequate treatment facilities, sanitary sewer system facilities, and/or components with an appropriate design capacity, to reasonably prevent SSOs (e.g., adequately

enlarging treatment or collection facilities to accommodate growth, infiltration and inflow (I/I), etc.);

c. Preventive maintenance (including cleaning and fats, oils, and grease (FOG) control);
d. Installation of adequate backup equipment; and
e. Inflow and infiltration prevention and control to the extent practicable.

6. The sanitary sewer system design capacity is appropriate to reasonably prevent SSOs.

7. The Discharger took all reasonable steps to stop and mitigate the impact of the discharge as soon as possible.

E. When an SSO occurs, the Discharger shall take all feasible steps and necessary remedial actions to: 1) control or limit the volume of untreated or partially treated wastewater discharged, 2) terminate the discharge, and 3) recover as much of the wastewater discharged as possible for proper disposal, including any wash down water.

The Discharger shall implement all remedial actions to the extent they may be applicable to the discharge and not inconsistent with an emergency response plan, including the following:

1. Interception and rerouting of untreated or partially treated wastewater flows around the wastewater line failure;

2. Vacuum truck recovery of SSOs and wash down water;

3. Cleanup of debris at the overflow site;

4. System modifications to prevent another SSO at the same location;

5. Adequate sampling to determine the nature and impact of the release; and

6. Adequate public notification to protect the public from exposure to the SSO.

F. The Discharger shall properly, manage, operate, and maintain all parts of the sanitary sewer system owned or operated by the Discharger, and shall ensure that the system operators (including employees, contractors, or other agents) are adequately trained and possess adequate knowledge, skills, and abilities.

G. The Discharger shall allocate adequate resources for the operation, maintenance, and repair of its sanitary sewer system, by establishing accounting mechanisms, and auditing procedures to ensure an adequate measure of revenues and expenditures. These procedures must be in compliance with applicable laws and regulations and comply with generally acceptable accounting practices.

H. The Discharger shall provide adequate capacity to convey base flows and peak flows, including flows related to wet weather events. Capacity shall meet or exceed the design criteria as defined in the Discharger's System Evaluation and Capacity Assurance Plan for all parts of the sanitary sewer system owned or operated by the Discharger.

I. The Discharger shall develop (or revise as necessary) and implement a written SSMP and make it available to the State and/or San Diego Water Board upon request. A copy of this document must be publicly available at the Discharger's office and/or available on the Internet.

J. California Business and Professions Code Sections 6735, 7835, and 7835.1 require that engineering and geologic evaluations and judgments be performed by or under the direction of registered professionals. All engineering and geologic evaluations and judgments shall be performed by or under the direction of registered professionals competent and proficient in the fields pertinent to the required activities. Specific elements of the SSMP that require professional evaluation and judgments shall be prepared by or under the direction of appropriately qualified professionals, and shall bear the professional(s)' signature and stamp.

K. The mandatory elements of the SSMP are specified below. However, if the Discharger believes that any element of this Section is not appropriate or applicable to the Discharger's sanitary sewer system, the SSMP program does not need to address that element. The Discharger must justify why that element is not applicable.

Sewer System Management Plan (SSMP)

1. **Goal.** The goal of the SSMP is to provide a plan and schedule to properly manage, operate, and maintain all parts of the sanitary sewer system. This will help reduce and prevent SSOs, as well as mitigate any SSOs that do occur.

2. **Organization.** The SSMP must identify:

   (a) The name of the responsible or authorized representative as described in section V.B.3 of Attachment D (Standard Provisions) of this Order.

   (b) The names and telephone numbers for management, administrative, and maintenance positions responsible for implementing specific measures in the SSMP program. The SSMP must identify lines of authority through an organization chart or similar document with a narrative explanation; and

   (c) The chain of communication for reporting SSOs, from receipt of a complaint or other information, including the person responsible for reporting SSOs to the State and San Diego Water Board and other agencies if applicable (such as County Health Officer, County Environmental Health Agency, and/or California Emergency Management Agency.

3. **Legal Authority.** The Discharger must demonstrate, through sanitary sewer system use ordinances, service agreements, or other legally binding procedures, that it possesses the necessary legal authority to:

   (a) Prevent illicit discharges into its sanitary sewer system (examples may include I/I, stormwater, chemical dumping, unauthorized debris and cut roots, etc.);

   (b) Require that sewers and connections be properly designed and constructed;

   (c) Ensure access for maintenance, inspection, or repairs for portions of the lateral owned or maintained by the Discharger;

(d) Limit the discharge of fats, oils, and grease and other debris that may cause blockages, and

(e) Enforce any violation of its sewer ordinances.

4. **Operation and Maintenance Program.** The SSMP must include those elements listed below that are appropriate and applicable to the Discharger's system:

(a) Maintain an up-to-date map of the sanitary sewer system, showing all gravity line segments and manholes, pumping facilities, pressure pipes and valves, and applicable stormwater conveyance facilities;

(b) Describe routine preventive operation and maintenance activities by staff and contractors, including a system for scheduling regular maintenance and cleaning of the sanitary sewer system with more frequent cleaning and maintenance targeted at known problem areas. The Preventative Maintenance (PM) program should have a system to document scheduled and conducted activities, such as work orders;

(c) Develop a rehabilitation and replacement plan to identify and prioritize system deficiencies and implement short-term and long-term rehabilitation actions to address each deficiency. The program should include regular visual and TV inspections of manholes and sewer pipes, and a system for ranking the condition of sewer pipes and scheduling rehabilitation. Rehabilitation and replacement should focus on sewer pipes that are at risk of collapse or prone to more frequent blockages due to pipe defects. Finally, the rehabilitation and replacement plan should include a capital improvement plan that addresses proper management and protection of the infrastructure assets. The plan shall include a time schedule for implementing the short- and long-term plans plus a schedule for developing the funds needed for the capital improvement plan;

(d) Provide training on a regular basis for staff in sanitary sewer system operations and maintenance, and require contractors to be appropriately trained; and

(e) Provide equipment and replacement part inventories, including identification of critical replacement parts.

5. **Design and Performance Provisions.**

(a) Design and construction standards and specifications for the installation of new sanitary sewer systems, pump stations and other appurtenances; and for the rehabilitation and repair of existing sanitary sewer systems; and

(b) Procedures and standards for inspecting and testing the installation of new sewers, pumps, and other appurtenances and for rehabilitation and repair projects.

6. **Overflow Emergency Response Plan.** Each Discharger shall develop and implement an overflow emergency response plan that identifies measures to protect public health and the environment. At a minimum, this plan must include the following:

(a) Proper notification procedures so that the primary responders and regulatory agencies are informed of all SSOs in a timely manner;

(b) A program to ensure an appropriate response to all overflows;

(c) Procedures to ensure prompt notification to appropriate regulatory agencies and other potentially affected entities (e.g. health agencies, San Diego Water Boards, water suppliers, etc.) of all SSOs that potentially affect public health or reach the waters of the State in accordance with the MRP. All SSOs shall be reported in accordance with this MRP, the California Water Code, other State Law, and other applicable San Diego Water Board WDRs or NPDES permit requirements. The SSMP should identify the officials who will receive immediate notification;

(d) Procedures to ensure that appropriate staff and contractor personnel are aware of and follow the Emergency Response Plan and are appropriately trained;

(e) Procedures to address emergency operations, such as traffic and crowd control and other necessary response activities; and

(f) A program to ensure that all reasonable steps are taken to contain and prevent the discharge of untreated and partially treated wastewater to waters of the United States and to minimize or correct any adverse impact on the environment resulting from the SSOs, including such accelerated or additional monitoring as may be necessary to determine the nature and impact of the discharge.

7. **FOG Control Program.** The Discharger shall evaluate its service area to determine whether a FOG control program is needed. If a Discharger determines that a FOG program is not needed, the Discharger must provide justification for why it is not needed. If FOG is found to be a problem, the Discharger must prepare and implement a FOG source control program to reduce the amount of these substances discharged to the sanitary sewer system. This plan shall include the following as appropriate:

(a) An implementation plan and schedule for a public education outreach program that promotes proper disposal of FOG;

(b) A plan and schedule for the disposal of FOG generated within the sanitary sewer system service area. This may include a list of acceptable disposal facilities and/or additional facilities needed to adequately dispose of FOG generated within a sanitary sewer system service area;

(c) The legal authority to prohibit discharges to the system and identify measures to prevent SSOs and blockages caused by FOG;

(d) Requirements to install grease removal devices (such as traps or interceptors), design standards for the removal devices, maintenance requirements, BMP requirements, record keeping and reporting requirements;

(e) Authority to inspect grease producing facilities, enforcement authorities, and whether the Discharger has sufficient staff to inspect and enforce the FOG ordinance;

(f) An identification of sanitary sewer system sections subject to FOG blockages and establishment of a cleaning maintenance schedule for each Section; and

(g) Development and implementation of source control measures for all sources of FOG discharged to the sanitary sewer system for each Section identified in (f) above.

8. **System Evaluation and Capacity Assurance Plan.** The Discharger shall prepare and implement a capital improvement plan (CIP) that will provide hydraulic capacity of key sanitary sewer system elements for dry weather peak flow conditions, as well as the appropriate design storm or wet weather event. At a minimum, the plan must include:

(a) Evaluation: Actions needed to evaluate those portions of the sanitary sewer system that are experiencing or contributing to an SSO discharge caused by hydraulic deficiency. The evaluation must provide estimates of peak flows (including flows from SSOs that escape from the system) associated with conditions similar to those causing overflow events, estimates of the capacity of key system components, hydraulic deficiencies (including components of the system with limiting capacity) and the major sources that contribute to the peak flows associated with overflow events;

(b) Design Criteria: Where design criteria do not exist or are deficient, undertake the evaluation identified in (a) above to establish appropriate design criteria; and

(c) Capacity Enhancement Measures: The steps needed to establish a short- and long-term CIP to address identified hydraulic deficiencies, including prioritization, alternatives analysis, and schedules. The CIP may include increases in pipe size, I/I reduction programs, increases and redundancy in pumping capacity, and storage facilities. The CIP shall include an implementation schedule and shall identify sources of funding.

(d) Schedule: The Discharger shall develop a schedule of completion dates for all portions of the capital improvement program developed in (a)-(c) above. This schedule shall be reviewed and updated consistent with the SSMP review and update requirements as described in Section B. 12.

9. **Monitoring, Measurement, and Program Modifications.** The Discharger shall:

(a) Maintain relevant information that can be used to establish and prioritize appropriate SSMP activities;

(b) Monitor the implementation and, where appropriate, measure the effectiveness of each element of the SSMP;

(c) Assess the success of the preventative maintenance program;

(d) Update program elements, as appropriate, based on monitoring or performance evaluations; and

(e) Identify and illustrate SSO trends, including: frequency, location, and volume.

10. **SSMP Program Audits.** As part of the SSMP, the Discharger shall conduct periodic internal audits, appropriate to the size of the system and the number of SSOs. At a minimum, these audits must occur every two years and a report must be prepared and kept on file. This audit shall focus on evaluating the effectiveness of the SSMP and the Discharger's compliance with the SSMP requirements identified in this subsection (B.11), including identification of any deficiencies in the SSMP and steps to correct them.

11. **Communication Program.** The Discharger shall communicate on a regular basis with the public on the development, implementation, and performance of its SSMP. The communication system shall provide the public the opportunity to provide input to the Discharger as the program is developed and implemented.

    The Discharger shall also create a plan of communication with systems that are tributary and/or satellite to the Discharger's sanitary sewer system.

L. Both the SSMP and the Discharger's program to implement the SSMP must be certified by the Discharger to be in compliance with the requirements set forth above. The Discharger shall certify that the SSMP, and subparts thereof, are in compliance with the requirements of this attachment.

In order to complete this certification, the Discharger's authorized representative must complete the certification portion in the Online SSO Database Questionnaire by checking the appropriate milestone box, printing and signing the automated form, and sending the form to:

State Water Resources Control Board
Division of Water Quality
Attn: SSO Program Manager
P.O. Box 100
Sacramento, CA 95812

The SSMP must be updated every five (5) years, and must include any significant program changes. Re-certification by the Discharger is required when significant updates to the SSMP are made. To complete the re-certification process, the Discharger shall enter the data in the Online SSO Database and mail the form to the State Water Board, as described above.