California Regional Water Quality Control Board

San Diego Region

Linda S. Adams
Secretary for Environmental Protection

Over 50 Years Serving San Diego, Orange, and Riverside Counties
Recipient of the 2004 Environmental Award for Outstanding Achievement from USEPA

Arnold Schwarzenegger
Governor

9174 Sky Park Court, Suite 100, San Diego, California 92123-4353
(858) 467-2952 • Fax (858) 571-6972
www.waterboards.ca.gov/sandiego

ORDER NO. R9-2008-0049
NPDES NO. CA0109142

WASTE DISCHARGE REQUIREMENTS
CONTINENTAL MARITIME OF SAN DIEGO, INC.
DISCHARGE TO THE SAN DIEGO BAY

The following Discharger is subject to waste discharge requirements as set forth in this Order:

Table 1. Discharger Information

Discharger	**Continental Maritime of San Diego, Inc.**
Name of Facility	**Continental Maritime of San Diego, Inc.**
Facility Address	**1995 Bay Front Street**
	San Diego, CA 92113
	San Diego County
The U.S. Environmental Protection Agency (USEPA) and the Regional Water Quality Control Board have classified this discharge as a major discharge.	

The discharge by the Owner from the discharge points identified below is subject to waste discharge requirements as set forth in this Order:

Table 2. Discharge Locations

Discharge Point No.	Effluent Description	Discharge Point Latitude	Discharge Point Longitude	Receiving Water
003	Area 3 storm water runoff	32° 41' 38" N	117° 8' 52" W	San Diego Bay
004	Area 1 (Pier 6) storm water runoff	32° 41' 38" N	117° 8' 53" W	San Diego Bay
005	Area 10 storm water runoff	32° 41' 41" N	117° 8' 57" W	San Diego Bay
006	Area 1 (Pier 4) storm water runoff	32° 41' 37" N	117° 9' 3" W	San Diego Bay
007	Area 7 storm water runoff	32° 41' 43" N	117° 8' 59" W	San Diego Bay
008	Municipal storm water drain	32° 41' 45" N	117° 8' 50" W	San Diego Bay
009	Area 5 storm water runoff	32° 41' 44" N	117° 8' 52" W	San Diego Bay
010	Area 8 storm water runoff	32° 41' 42" N	117° 8' 53" W	San Diego Bay

Table 3. Administrative Information

This Order was adopted by the Regional Water Quality Control Board on:	**August 13, 2008**
This Order shall become effective on:	**August 13, 2008**
This Order shall expire on:	**August 13, 2013**
The Discharger shall file a Report of Waste Discharge in accordance with title 23, California Code of Regulations, as application for issuance of new waste discharge requirements no later than:	**February 14, 2013**

I, John Robertus, Executive Officer, do hereby certify that this Order with all attachments is a full, true, and correct copy of an Order adopted by the California Regional Water Quality Control Board, San Diego Region, on August 13, 2008.

John Robertus, Executive Officer

Table of Contents

I. Facility Information 5
II. Findings 6
III. Discharge Prohibitions 13
IV. Effluent Limitations and Discharge Specifications 14
A. Effluent Limitations – Storm Water 14
B. Land Discharge Specifications – Not Applicable 14
C. Reclamation Specifications – Not Applicable 14
V. Receiving Water Limitations 15
A. Surface Water Limitations 15
B. Groundwater Limitations – Not Applicable 17
VI. Provisions 18
A. Standard Provisions 18
B. Monitoring and Reporting Program (MRP) Requirements 19
C. Special Provisions 20
1. Reopener Provisions 20
2. Special Studies, Technical Reports and Additional Monitoring Requirements 21
3. Best Management Practices and Pollution Prevention 22
4. Construction, Operation and Maintenance Specifications 22
5. Special Provisions for Municipal Facilities (POTWs Only) – Not Applicable 22
6. Other Special Provisions – Not Applicable 22
7. Compliance Schedules – Not Applicable 22
VII. Compliance Determination 23
A. General 23
1. Acute Toxicity 23

List of Tables

Table 1. Discharger Information 1
Table 2. Discharge Locations 1
Table 3. Administrative Information 2
Table 4. Facility Information 5
Table 5. Basin Plan Beneficial Uses 8
Table 6. Receiving Water Turbidity Objectives 15

List of Attachments

Attachment A – Definitions A-1
Attachment B – Map B-1
Attachment C – Flow Schematic C-1
Attachment D – Standard Provisions D-1
Attachment E – Monitoring and Reporting Program E-1
Attachment F – Fact Sheet F-1

I. FACILITY INFORMATION

The following Discharger is subject to waste discharge requirements as set forth in this Order:

Table 4. Facility Information

Discharger	**Continental Maritime of San Diego, Inc.**
Name of Facility	**Continental Maritime of San Diego, Inc.**
Facility Address	**1995 Bay Front Street**
	San Diego, CA 92113
	San Diego County
Facility Contact, Title, and Phone	**Daniel Flood, Vice-President/General Manager, (619) 234-8851**
Mailing Address	**SAME**
Type of Facility	**Shipbuilding and Repair (SIC Code # 3731)**
Facility Design Flow	**NA**

II. FINDINGS

The California Regional Water Quality Control Board, San Diego Region (hereinafter Regional Water Board), finds:

A. Background. Continental Maritime of San Diego, Inc. (CMSD) (hereinafter Discharger) is currently discharging pursuant to Order No. R9-2002-0282 and National Pollutant Discharge Elimination System (NPDES) Permit No. CA0109142. The Discharger submitted a Report of Waste Discharge, dated May 2, 2007, and applied for a NPDES permit renewal to discharge industrial storm water from numerous discharge locations in CMSD, hereinafter Facility. Contact storm water is discharged to the San Diego Bay from the Facility only in the event that all storm water retention capacity at the Facility has been exhausted. The application was deemed complete on November 27, 2007.

For the purposes of this Order, references to the "Discharger" or "permittee" in applicable federal and state laws, regulations, plans, or policy are held to be equivalent to references to the Discharger herein.

B. Facility Description. CMSD is a full service ship repair facility located on 14 acres of land and 17.8 acres of water. The Facility includes 350,625 square feet of office, warehouse and manufacturing building area, 679 parking spaces, and six piers ranging from 175 feet to 700 feet in length. The shipyard provides a variety of services, including: structural repair, sheet metal fabrication, surface preparation (mechanical cleaning and abrasive blasting) and painting, electrical component repair and replacement, machinery overhaul and repair, piping systems, boiler repair, bilge/ballast water treatment, acid flushing, lagging and insulation removal and installation, and the overhaul and rigging of shipboard components. Some industrial processes at the Facility are exposed to storm water.

General industrial processes associated with shipbuilding, conversion, repair, and maintenance include: metal fabrication, welding and brazing, abrasive blasting, hydrowashing, fiberglass work, paint and coating application, mechanical work, electrical work, wood work (including sanding), chemical cleaning of piping, line heating, and hazardous waste storage. Several shipbuilding and repair activities take place over water or near shore locations, while others may be performed in workshops or at work site located inland on the shipyard property.

Storm water generated on the site is collected via a storm water diversion system (SWDS), which can capture up to 2.3 inches of rainfall within a 24-hour period in various catchment basins around the Facility. This includes the first flush of storm water associated with each storm event. The industrial areas are divided into 11 distinct industrial storm water control areas that are segregated by berms and associated pumping mechanisms to control and divert storm water to a series of above ground tanks for storage. The Industrial User Discharge Permit (No. 11-0417-01A) issued by San Diego Metropolitan Pretreatment Program to the facility, authorized the Facility to release an annual average of 10,420 gallons per day (gpd) of dilute wastewaters (including storm water) in addition to an annual average of 5,125 gpd of industrial

wastewater discharges to the sanitary sewer system. Stored storm water is analyzed to determine if it meets the pretreatment discharge limits specified in the Industrial User Discharge Permit and is eventually released into the San Diego Metropolitan Sanitary Sewer System (SDMSSS). No storm water has been discharged to San Diego Bay from the Facility since 2005.

In the event of a major storm that exceeds 2.3 inches in a 24-hour period, CMSD has the capability of releasing excess storm water to San Diego Bay via eight discharge points. Excess storm water that collects in the vicinity of seven designated industrial process areas within the Facility (Areas 1, 2, 3, 5, 7, 8, and 10) is routed to these outfalls during a major storm. Overflow storm water from areas 4, 6, 9, and 11 is not routed directly to outfalls, but allowed to drain into and commingle with stormwater in Area 10, prior to release to Discharge Point No. 005.

A description of each storm water collection area and discharge location is provided in section II.A of Attachment F (Fact Sheet) to this Order. Attachment B provides a map of the area around the facility. Attachment C provides a flow schematic of the facility.

C. **Legal Authorities.** This Order is issued pursuant to section 402 of the federal Clean Water Act (CWA) and implementing regulations adopted by the U.S. Environmental Protection Agency (USEPA) and chapter 5.5, division 7 of the California Water Code (commencing with section 13370). It shall serve as a NPDES permit for point source discharges from this facility to surface waters. This Order also serves as Waste Discharge Requirements (WDRs) pursuant to article 4, chapter 4, division 7 of the Water Code (commencing with section 13260).

D. ***Background and Rationale for Requirements.*** *The Regional Water Board developed* the requirements in this Order based on information submitted as part of the application, through monitoring and reporting programs, and other available information. The Fact Sheet (Attachment F), which contains background information and rationale for Order requirements, is hereby incorporated into this Order and constitutes part of the Findings for this Order. Attachments A through E and G are also incorporated into this Order.

E. **California Environmental Qualit y Act (CEQA).** Under Water Code section 13389, this action to adopt an NPDES permit is exempt from the provisions of CEQA, Public Resources Code sections 21100-21177.

F. **Technology-based Effluent Limitations.** Section 301(b) of the CWA and implementing USEPA permit regulations at section 122.44, title 40 of the Code of Federal Regulations[1], require that permits include conditions meeting applicable technology-based requirements at a minimum, and any more stringent effluent limitations necessary to meet applicable water quality standards. The discharge authorized by this Order must meet minimum federal technology-based requirements based on Best Professional Judgment (BPJ) in accordance with Part 125, section 125.3. A detailed discussion of the technology-based effluent limitations development is included in the Fact Sheet (Attachment F).

[1] All further statutory references are to title 40 of the Code of Federal Regulations unless otherwise indicated.

G. **Water Quality-based Effluent Limitations.** Section 301(b) of the CWA and section 122.44(d) require that permits include limitations more stringent than applicable federal technology-based requirements where necessary to achieve applicable water quality standards.

Section 122.44(d)(1)(i) mandates that permits include effluent limitations for all pollutants that are or may be discharged at levels that have the reasonable potential to cause or contribute to an exceedance of a water quality standard, including numeric and narrative objectives within a standard. Where reasonable potential has been established for a pollutant, but there is no numeric criterion or objective for the pollutant, water quality-based effluent limitations (WQBELs) must be established using: (1) USEPA criteria guidance under CWA section 304(a), supplemented where necessary by other relevant information; (2) an indicator parameter for the pollutant of concern; or (3) a calculated numeric water quality criterion, such as a proposed state criterion or policy interpreting the state's narrative criterion, supplemented with other relevant information, as provided in section 122.44(d)(1)(vi).

H. **Water Quality Control Plans.** The Regional Water Board adopted a Water Quality Control Plan for the San Diego Basin (hereinafter Basin Plan) on September 8, 1994, and last amended on April 25, 2007, that designates beneficial uses, establishes water quality objectives, and contains implementation programs and policies to achieve those objectives for all waters addressed through the plan. Beneficial uses applicable to the San Diego Bay are as follows:

Table 5. Basin Plan Beneficial Uses

Discharge Point Nos.	Receiving Water Name	Beneficial Use(s)
003 through 010	San Diego Bay	Existing: Industrial Service Supply (IND); navigation (NAV); contact water recreation (REC1); non-contact water recreation (REC2); commercial and sport fishing (COMM); preservation of biological habitats of special significance (BIOL); estuarine habitat (EST); wildlife habitat (WILD); preservation of rare, threatened or endangered species (RARE); marine habitat (MAR); migration of aquatic organisms (MIGR); shellfish harvesting (SHELL)

Requirements of this Order implement the Basin Plan.

Under section 303(d) of the 1972 Clean Water Act, states, territories and authorized tribes are required to develop lists of water quality limited segments. The waters on these lists do not meet water quality standards, even after point sources of pollution have installed the minimum required levels of pollution control technology. On November 30, 2006 USEPA gave final approval to California's 2006 section 303(d) List of Water Quality Limited Segments. The San Diego Bay, as a whole, is listed as impaired for polychlorinated biphenyls (PCBs). Additional portions of the San Diego Bay are listed as impaired for applicable parameters. Two portions of the San Diego Bay applicable to the Facility include, "San Diego Bay Shoreline, near Coronado Bridge", "San Diego Bay Shoreline, between Sampson and 28th Streets", and "San

Diego Bay Shoreline, near Chollas Creek". These portions of the San Diego Bay are listed in the 303(d) list as impaired for: benthic community effects, copper, mercury, polycyclic aromatic hydrocarbons (PAHs), polychlorinated biphenyls (PCBs), sediment toxicity, and zinc.

No applicable TMDL has been adopted by the Regional Water Board and approved by USEPA. A TMDL for sediment toxicity is currently being developed for the "San Diego Bay Shoreline, near Chollas Creek".

The State Water Board adopted the *Water Quality Control Plan for Control of Temperature in the Coastal and Interstate Water and Enclosed Bays and Estuaries of California* (Thermal Plan) on May 18, 1972, and amended this plan on September 18, 1975. This plan contains temperature objectives for surface waters. Requirements of this Order implement the Thermal Plan.

I. **National Toxics Rule (NTR) and California Toxics Rule (CTR).** USEPA adopted the NTR on December 22, 1992, and later amended it on May 4, 1995 and November 9, 1999. About 40 criteria in the NTR applied in California. On May 18, 2000, USEPA adopted the CTR. The CTR promulgated new toxics criteria for California and, in addition, incorporated the previously adopted NTR criteria that were applicable in the state. The CTR was amended on February 13, 2001. These rules contain water quality criteria for priority pollutants. These rules include water quality criteria for priority pollutants and are applicable to this discharge.

J. **State Implementation Policy.** On March 2, 2000, the State Water Board adopted the Policy for Implementation of Toxics Standards for Inland Surface Waters, Enclosed Bays, and Estuaries of California (State Implementation Policy or SIP). The SIP became effective on April 28, 2000 with respect to the priority pollutant criteria promulgated for California by the USEPA through the NTR and to the priority pollutant objectives established by the Regional Water Board in the Basin Plan. The SIP became effective on May 18, 2000 with respect to the priority pollutant criteria promulgated by the USEPA through the CTR. The State Water Board adopted amendments to the SIP on February 24, 2005 that became effective on July 13, 2005. The SIP establishes implementation provisions for priority pollutant criteria and objectives and provisions for chronic toxicity control. The SIP is not applicable to the storm water discharges authorized by this Order.

K. **Compliance Schedules and Interim Requirements.** Section 2.1 of the SIP provides that, based on a Discharger's request and demonstration that it is infeasible for an existing Discharger to achieve immediate compliance with an effluent limitation derived from a CTR criterion, compliance schedules may be allowed in an NPDES permit. Unless an exception has been granted under section 5.3 of the SIP, a compliance schedule may not exceed 5 years from the date that the permit is issued or reissued, nor may it extend beyond 10 years from the effective date of the SIP (or May 18, 2010) to establish and comply with CTR criterion-based effluent limitations. Where a compliance schedule for a final effluent limitation exceeds 1 year, the Order must include interim numeric limitations for that constituent or parameter. Where allowed by the Basin Plan, compliance schedules and interim effluent limitations or discharge

specifications may also be granted to allow time to implement a new or revised water quality objective. The Discharger is expected to be able to comply with all requirements of this Order immediately following adoption. This Order does not include compliance schedules and interim effluent limitations.

L. **Alaska Rule.** On March 30, 2000, USEPA revised its regulation that specifies when new and revised state and tribal water quality standards (WQS) become effective for CWA purposes. (40 CFR § 131.21; 65 Fed. Reg. 24641 (April 27, 2000).) Under the revised regulation (also known as the Alaska rule), new and revised standards submitted to USEPA after May 30, 2000, must be approved by USEPA before being used for CWA purposes. The final rule also provides that standards already in effect and submitted to USEPA by May 30, 2000 may be used for CWA purposes, whether or not approved by USEPA.

M. **Stringency of Requirements for Individual Pollutants.** The implementation of a BMP plan for the discharge of industrial wastes associated with ship construction, repair and maintenance activities are appropriate in accordance with 40 CFR 122.44(k). To carry out the purpose and intent of the CWA, the Discharger is required to develop and implement a best management practices (BMP) plan, as authorized by CWA section 304(e) and section 402(p), for toxic pollutants and hazardous substances, and for the control of storm water discharges.

Numeric technology-based effluent limitations are not applicable to the discharges authorized under this Order and have not been established for discharges authorized under this Order, thus technology based effluent-limitations contained in this Order are not more stringent than required by the CWA.

WQBELs have been scientifically derived to implement water quality objectives that protect beneficial uses. Both the beneficial uses and the water quality objectives have been approved pursuant to federal law and are the applicable federal water quality standards.

N. **Antidegradation Policy**. Section 131.12 requires that the state water quality standards include an antidegradation policy consistent with the federal policy. The State Water Board established California's antidegradation policy in State Water Board Resolution No. 68-16. Resolution No. 68-16 incorporates the federal antidegradation policy where the federal policy applies under federal law. Resolution No. 68-16 requires that existing quality of waters be maintained unless degradation is justified based on specific findings. The Regional Water Board's Basin Plan implements, and incorporates by reference, both the state and federal antidegradation policies. As discussed in detail in the Fact Sheet the permitted discharge is consistent with the antidegradation provision of section 131.12 and State Water Board Resolution No. 68-16.

O. **Anti-Backsliding Requirements.** Sections 402(o)(2) and 303(d)(4) of the CWA and federal regulations at title 40, Code of Federal Regulations section 122.44(l) prohibit backsliding in NPDES permits. These anti-backsliding provisions require effluent limitations in a reissued permit to be as stringent as those in the previous permit, with some exceptions where limitations may be relaxed. The Discharge of fire protection

water has been eliminated by the Discharger and is no longer authorized under this Order. Thus, effluent limitations and specifications applicable to only the fire protection water have been removed. All effluent limitations in this Order for the remaining discharge of storm water are at least as stringent as the effluent limitations in the previous Order and meet State and federal anti-backsliding requirements.

P. **Endangered Species Act.** This Order does not authorize any act that results in the taking of a threatened or endangered species or any act that is now prohibited, or becomes prohibited in the future, under either the California Endangered Species Act (Fish and Game Code sections 2050 to 2097) or the Federal Endangered Species Act (16 U.S.C.A. sections 1531 to 1544). This Order requires compliance with effluent limits, receiving water limits, and other requirements to protect the beneficial uses of waters of the state. The Discharger is responsible for meeting all requirements of the applicable Endangered Species Act.

Q. **Monitoring and Reporting.** Section 122.48 requires that all NPDES permits specify requirements for recording and reporting monitoring results. Water Code sections 13267 and 13383 authorizes the Regional Water Board to require technical and monitoring reports. The Monitoring and Reporting Program establishes monitoring and reporting requirements to implement federal and State requirements. This Monitoring and Reporting Program is provided in Attachment E.

Sediment monitoring requirements have been carried over from Order No. R9-2002-0282 to determine compliance with receiving water objectives and to determine the impacts of the operation on the surrounding sediment and biota. Storm water monitoring requirements have been carried over from Order No. R9-2002-0282 to determine the effectiveness of the BMP Program and determine compliance with receiving water objectives. Operational monitoring requirements have been carried over from Order No. R9-2002-0282 to determine the effective of the BMP Plan, determine compliance with the applicable toxicity limitations, and ensure that appropriate BMPs are properly implemented.

R. **Standard and Special Provisions.** Standard Provisions, which apply to all NPDES permits in accordance with section 122.41, and additional conditions applicable to specified categories of permits in accordance with section 122.42, are provided in Attachment D. The Discharger must comply with all standard provisions and with those additional conditions that are applicable under section 122.42. The Regional Water Board has also included in this Order special provisions applicable to the Discharger. A rationale for the special provisions contained in this Order is provided in the attached Fact Sheet.

S. **Provisions and Requi rements Implementing State Law.** The provisions/requirements in section VI.A.2.1 of this Order are included to implement State law only. These provisions/requirements are not required or authorized under the federal CWA; consequently, violations of these provisions/requirements are not subject to the enforcement remedies that are available for NPDES violations.

T. Notification of Interested Parties. The Regional Water Board has notified the Discharger and interested agencies and persons of its intent to prescribe Waste Discharge Requirements for the discharge and has provided them with an opportunity to submit their written comments and recommendations. Details of notification are provided in the Fact Sheet of this Order.

U. Consideration of Public Comment. The Regional Water Board, in a public meeting, heard and considered all comments pertaining to the discharge. Details of the Public Hearing are provided in the Fact Sheet of this Order.

THEREFORE, IT IS HEREBY ORDERED, that this Order supercedes Order No. R9-2002-0282 except for enforcement purposes, and, in order to meet the provisions contained in division 7 of the Water Code (commencing with section 13000) and regulations adopted thereunder, and the provisions of the CWA and regulations and guidelines adopted thereunder, the Discharger shall comply with the requirements in this Order.

III. DISCHARGE PROHIBITIONS

A. The Discharger shall comply with all requirements of the Basin Plan Waste Discharge Prohibitions which are hereby included in this Order by reference.

B. The discharge of sewage, except as noted in the Basin Plan Waste Discharge Prohibitions, to San Diego Bay is prohibited.

C. The discharge of industrial process water including hydroblast water, is prohibited.

D. The discharge of the first flush of storm water runoff from high risk areas is prohibited except if the pollutants in the discharge are reduced to the extent and demonstrated through testing that the discharge achieves compliance with the acute toxicity limitation specified in section IV.A of this Order. The discharge of the remainder of the storm water must also achieve compliance with the acute toxicity limitation specified in section IV.A. of this Order but only needs to be demonstrated twice per year, unless under accelerated testing.

E. Th e discharges of municipal and industrial waste sludge and untreated sludge digester supernatant, centrate, or filtrate to San Diego Bay is prohibited.

F. The discharge of rubbish, refuse, debris, materials of petroleum origin, waste zinc plates, abrasives, primer, paint, paint chips, solvents, and marine fouling organisms, and the deposition of such wastes at any place where they could eventually be discharged is prohibited. This prohibition does not apply to the discharge of marine fouling organisms removed from unpainted, uncoated surfaces by underwater operations and discharges that result from floating booms that were installed for "Force Protection" purposes. Rubbish and refuse include, but are not limited to, any cans, bottles, paper, plastic, vegetable matter, or dead animals deposited or caused to be deposited by man.

G. The discharge of materials of petroleum origin in sufficient quantities to be visible is prohibited.

H. The discharge or bypassing of untreated waste to San Diego Bay is prohibited.

I. The discharge of polychlorinated biphenyl compounds, such as those used for transformer fluid, is prohibited.

J. The discharge of wastes and pollutants from underwater operations, such as underwater paint and coating removal and underwater hull cleaning, is prohibited. This prohibition does not apply to the discharge of marine fouling organisms removed from unpainted and uncoated surfaces by underwater operations.

K. The discharge of wastes that cause or contribute to the violation of water quality standards (designated beneficial uses and water quality objectives developed to protect beneficial uses) is prohibited.

IV. EFFLUENT LIMITATIONS AND DISCHARGE SPECIFICATIONS

A. Effluent Limitations – Storm Water

Discharges of storm water shall achieve a rating of "Pass" for acute toxicity with compliance determined as specified in section VII.A.1 of this Order.

B. Land Discharge Specifications – Not Applicable

C. Reclamation Specifications – Not Applicable

V. RECEIVING WATER LIMITATIONS

A. Surface Water Limitations

The discharge of wastes shall not cause or contribute to an exceedance of any applicable water quality objective or standard contained in applicable statewide water quality control plan, the California Toxics Rule, or the San Diego Basin Plan.

Receiving water limitations are based on water quality objectives contained in the Basin Plan and are a required part of this Order. The discharge shall not cause the following in the San Diego Bay.

1. Physical Characteristics

a. Waters shall not contain oils, greases waxes, or other materials in concentrations which result in visible film or coating on the surface of the water or on objects in the water, or which cause nuisance or which otherwise adversely affect beneficial uses.

b. Waters shall not contain floating material, including solids, liquids, foams, and scum in concentrations which cause nuisance or adversely affect beneficial uses.

c. The suspended sediment load and suspended sediment discharge rate of surface waters shall not be altered in such a manner as to cause nuisance or adversely affect beneficial uses.

d. Waters shall not contain suspended and settleable solids in concentrations of solids that cause nuisance or adversely affect beneficial uses.

e. Waters shall not contain taste or odor producing substances at concentrations, which cause a nuisance or adversely affect beneficial uses.

f. Waters shall be free of changes in turbidity that cause nuisance or adversely affect beneficial uses. The transparency of the waters in lagoons and estuaries shall not be less than 50 percent of the depth at locations where measurement is made by means of a standard Secchi disk, except where lesser transparency is caused by rainfall runoff from undisturbed natural areas and dredging projects conducted in conformance with waste discharge requirements of the Regional Water Board. With these two exceptions, increases in turbidity attributable to controllable water quality factors shall not exceed the following limits:

Table 6. Receiving Water Turbidity Objectives

Natural Turbidity	Maximum Increase
0 – 50 NTU	20% over natural turbidity level
50 – 100 NTU	10 NTU
Greater than 100 NTU	10% over natural turbidity level

2. Thermal Characteristics

Discharges from the Facility shall not exceed the natural temperature of the receiving waters by more than 20°F.

3. Chemical Characteristics

a. Dissolved oxygen levels shall not be less than 5.0 mg/L in waters of the San Diego Bay. The annual mean dissolved oxygen concentration shall not be less than 7 mg/L.

b. The pH shall not be changed at any time more than 0.2 units from that which occurs naturally. The pH shall not be depressed below 7.0 nor raised above 9.0.

c. Waters of the San Diego Bay shall not contain biostimulatory substances in concentrations that promote aquatic growth to the extent that such growths cause nuisance or adversely affect beneficial uses.

d. The discharge of wastes shall not cause concentrations of un-ionized ammonia (NH_3) to exceed 0.025 mg/L (as N) in the San Diego Bay.

e. No individual pesticide or combination of pesticides shall be present in the water column, sediments or biota at concentration(s) that adversely affect beneficial uses. Pesticides shall not be present at levels which will bioaccumulate in aquatic organisms to levels which are harmful to human health, wildlife or aquatic organisms.

4. Bacteriological Characteristics

a. In waters designated for contact recreation (REC-1), the fecal coliform concentration based on a minimum of not less than five samples for any 30-day period, shall not exceed a log mean of 200/100 ml, nor shall more than 10 percent of the total samples during any 30-day period exceed 400 per 100 ml.

b. In waters designated for shell fish harvesting (SHELL), the median total coliform concentration throughout the water column for any 30-day period shall not exceed 70/100 ml nor shall more than 10 percent of the samples collected during any 30-day period exceed 230/100 ml for five-tube decimal dilution test or 330/100 ml when a three-tube decimal dilution test is used.

c. In waters designated for contact recreation (REC-1), the enterococci concentration shall not exceed 35/100 ml in all areas, 104/100 ml in designated beach areas, 276/100 ml in moderately or lightly used areas, and 500/100 ml in infrequently used areas.

5. Biological Characteristics

a. Marine communities, including vertebrate, invertebrate, and plant species, shall not be degraded.

b. The natural taste, odor, and color of fish, shellfish, or other marine resources used for human consumption shall not be altered.

c. The concentration of organic materials in fish, shellfish, or other marine resources used for human consumption shall not bioaccumulate to levels that are harmful to human health.

6. Radioactivity

Radionuclides shall not be present in concentrations that are deleterious to human, plant animal, or aquatic life nor that result in the accumulation of radionuclides in the food web to an extent that presents a hazard to human, plant, animal or aquatic life.

7. Toxicity

All waters shall be maintained free of toxic substances in concentrations that are toxic to, or that produce detrimental physiological responses in human, plant, animal, or aquatic life. Compliance with this objective will be determined by use of indicator organisms, analyses of species diversity, population density, growth anomalies, bioassays of appropriate duration, or other appropriate methods as specified by the Regional Water Board.

B. Groundwater Limitations – Not Applicable

VI. PROVISIONS

A. Standard Provisions

1. Federal Standard Provisions. The Discharger shall comply with all Standard Provisions included in Attachment D of this Order.

2. Regional Water Board Standard Provisions. The Discharger shall comply with the following provisions:

   a. The Discharger shall comply with all requirements and conditions of this Order. Any permit non-compliance constitutes a violation of the CWA and/or of the California Water Code (CWC) and is grounds for enforcement action, permit termination, revocation and reissuance, or modification, or for denial of an application for permit renewal, modification, or reissuance.

   b. The Discharger shall comply with all applicable federal, State, and local laws and regulations for handling, transport, treatment, or disposal of waste or the discharge of waste to waters of the State in a manner which causes or threatens to cause a condition of pollution, contamination or nuisance as those terms are defined in CWC 13050.

   c. The Porter-Cologne Water Quality Control Act provides for civil and criminal penalties comparable to, and in some cases greater than, those provided for under the CWA.

   d. Any noncompliance with this Order is a violation of the CWC and/or the CWA and is grounds for denial of an application for Order renewal or modification.

   e. No discharge of waste into waters of the State, whether or not the discharge is made pursuant to WDRs, shall create a vested right to continue the discharge. All discharges of wastes into waters of the State are privileges, not rights.

   f. For purposes of this Order, the term "permittee" used in parts of 40 CFR incorporated into this Order by reference and/or applicable to this Order shall have the same meaning as the term "Discharger" used elsewhere in this Order.

   g. This Order expires on August 13, 2013 after which, the terms and conditions of this permit are automatically continued pending issuance of a new Order, provided that all requirements of USEPA's NPDES regulations at 40 CFR 122.6 and the State's regulations at CCR Title 23, section 2235.4 regarding the continuation of expired Orders and waste discharge requirements are met.

   h. Except as provided for in 40 CFR 122.7, no information or documents submitted in accordance with or in application for this permit will be considered confidential, and all such information and documents shall be available for review by the public at the office of the Regional Water Board.

i. A copy of this Order shall be maintained on-site at the Facility, and shall be available to Regional Water Board, State Water Board, and USEPA personnel and/or their authorized representative at all times.

j. The Discharger shall comply with any interim limitations established by addendum, enforcement action, or revised waste discharge requirements that have been or may be adopted by the Regional Water Board.

k. Failure to comply with provisions or requirements of this Order, or violation of other applicable laws or regulations governing discharges from this Facility, may subject the Discharger to administrative or civil liabilities, criminal penalties, and/or other enforcement remedies to ensure compliance. Additionally, certain violations may subject the Discharger to civil or criminal enforcement from appropriate local, State, or federal law enforcement entities.

l. In the event the Discharger does not comply or will be unable to comply for any reason, with any prohibition, effluent limitation, discharge specification, or receiving water limitation of this Order, the Discharger shall notify the Regional Water Board by telephone (858) 467-2952 within 24 hours of having knowledge of such noncompliance, and shall confirm this notification in writing within five days, unless the Regional Water Board waives confirmation. The written notification shall state the nature, time, duration, and cause of noncompliance, and shall describe the measures being taken to remedy the current noncompliance and prevent recurrence including, where applicable, a schedule of implementation. Other noncompliance requires written notification as above at the time of the normal monitoring report.

B. Monitoring and Reporting Program (MRP) Requirements

1. The Discharger shall comply with the MRP, and future revisions thereto, in Attachment E of this Order.

2. Reports required to be submitted to this Regional Water Board shall be sent to:

   Executive Officer
   California Regional Water Quality Control Board
   San Diego Region
   9174 Sky Park Court, Suite 100
   San Diego, CA 92123-4340

   Notifications required to be provided to this Regional Water Board shall be made to:

   Telephone – (858) 467-2952
   Facsimile – (858) 571-6972

3. After notification by the State or Regional Water Board, the Discharger may be required to electronically submit self-monitoring reports. Until such time as electronic submission of self-monitoring reports is required, the Discharger shall

submit discharge monitoring reports (DMRs) in accordance with the requirements described further below.

DMRs must be signed and certified as required by the standard provisions (Attachment D). The Discharger shall submit the original DMR and one copy to:

State Water Resources Control Board
Division of Water Quality
c/o DMR Processing Center
PO Box 100
Sacramento, CA 95812-1000

All discharge monitoring results must be reported on the official USEPA pre-printed DMR forms (USEPA Form 3320-1). Forms that are self generated or modified cannot be accepted.

C. Special Provisions

1. Reopener Provisions

a. This Order may be reopened and modified in accordance with NPDES regulations at 40 CFR Parts 122 and 124, as necessary, to include additional conditions or limitations based on newly available information or to implement any USEPA approved, new, State water quality objective.

This Order may be modified, revoked and reissued, or terminated for cause including, but not limited to, the following:

i. Violations of any terms or conditions of this Order.

ii. Obtaining this Order by misrepresentation or failure to disclose fully all relevant facts.

iii. A cha nge in any condition that requires either a temporary or permanent reduction or elimination of the authorized discharge.

b. This Order may be re-opened and modified, to incorporate in accordance with the provisions set forth in 40 CFR Parts 122 and 124, to include requirements for the implementation of the watershed management approach.

c. This Order may be re-opened and modified, revoked, and reissued or terminated in accordance with the provisions of 40 CFR sections 122.44, 122.62 to 122.64, 125.62, and 125.64. Causes for taking such actions include, but are not limited to, failure to comply with any condition of this Order and permit, and endangerment to human health or the environment resulting from the permitted activity.

d. This Order may be re-opened and modified, to incorporate additional limitations, prohibitions, and requirements, based on the results of additional monitoring required by the MRP.

e. The filing of a request by the Discharger for modifications, revocation and reissuance, or termination of this Order, or a notification of planned change in or anticipated noncompliance with this Order does not stay any condition of this Order.

f. **Toxicity Reopener.** In accordance with 40 CFR Parts 122 and 124, this permit may be modified to include effluent limitations or permit conditions to address acute toxicity in the effluent or receiving waterbody, as a result of the discharge; or to implement new, revised, or newly interpreted water quality standards applicable to acute or chronic toxicity.

2. Special Studies, Technical Reports and Additional Monitoring Requirements

a. Toxicity Reduction Requirements

i. Initial Investigation TRE Workplan

Within 90 days of the permit effective date, the permittee shall prepare and submit a copy of their Initial Investigation Toxicity Reduction Evaluation (TRE) Workplan (1-2 pages) to the permitting authority for review. This plan shall include steps the permittee intends to follow if toxicity is measured above an acute WET permit limit or trigger and should include, at minimum:

(a) A description of the investigation and evaluation techniques that would be used to identify potential causes and sources of toxicity, effluent variability, and treatment system efficiency.

(b) A description of methods for maximizing in-house treatment system efficiency, good housekeeping practices, and a list of all chemicals used in operations at the facility.

(c) If a Toxicity Identification Evaluation (TIE) is necessary, an indication of who would conduct the TIEs (i.e., an in-house expert or outside contractor).

(d) The determination of when a TIE is necessary.

ii. Accelerated Toxicity Testing and TRE/TIE Process

(a) If accelerated toxicity testing is required, as specified in section V.E.2 of the MRP, and one of the monitoring events exceeds an acute WET permit limit, then, within 14 days of receipt of this test result, the permittee shall initiate a TRE using, based on the type of treatment facility, USEPA manual *Toxicity Reduction Evaluation Guidance for Municipal Wastewater Treatment Plants* (EPA/833/B-99/002, 1999) or USEPA manual

Generalized Methodology for Conducting Industrial Toxicity Reduction Evaluations (EPA/600/2-88/070, 1989). In conjunction, the permittee shall develop and implement a Detailed TRE Workplan which shall include: further actions undertaken by the permittee to investigate, identify, and correct the causes of toxicity; actions the permittee will take to mitigate the impact of the discharge and prevent the recurrence of toxicity; and a schedule for these actions.

(b) The permittee may initiate a Toxicity Identification Evaluation (TIE) as part of a TRE to identify the causes of toxicity using the same species and test method and, as guidance, EPA test method manuals: *Methods for Aquatic Toxicity Identification Evaluations: Phase I Toxicity Characterization Procedures* (EPA/600/6-91/003, 1991); *Methods for Aquatic Toxicity Identification Evaluations, Phase II Toxicity Identification Procedures for Samples Exhibiting Acute and Chronic Toxicity* (EPA/600/R-92/080, 1993); *Methods for Aquatic Toxicity Identification Evaluations, Phase III Toxicity Confirmation Procedures for Samples Exhibiting Acute and Chronic Toxicity* (EPA/600/R-92/081, 1993); and *Marine Toxicity Identification Evaluation (TIE): Phase I Guidance Document* (EPA/600/R-96-054, 1996).

3. Best Management Practices and Pollution Prevention

a. Best Management Practices Plan

The Discharger shall continue to implement a BMP Plan that prevents the discharge of pollutants into the receiving waters at levels that would contribute to the degradation of the receiving waters or otherwise negatively affect the beneficial uses of the receiving water. At a minimum, the BMP Plan shall be developed and implemented in accordance with Attachment G to prevent, or minimize the potential for, the release of pollutants to waters of the State and waters of the United States.

4. Construction, Operation and Maintenance Specifications

The Facility shall be operated and maintained in a manner consistent with the BMP Plan as specified in section VI.C.3.a of this Order.

5. Special Provisions for Municipal Facilities (POTWs Only) – Not Applicable

6. Other Special Provisions – Not Applicable

7. Compliance Schedules – Not Applicable

VII. COMPLIANCE DETERMINATION

Compliance with the effluent limitations contained in section IV of this Order will be determined as specified below:

A. General

1. Acute Toxicity

The determination of Pass or Fail from a single-effluent-concentration (paired) acute toxicity test is determined using a one-tailed hypothesis test called a t-test. The objective of a Pass or Fail test is to determine if survival in the single treatment (100% effluent) is significantly different from survival in the control (0% effluent). Following Section 11.3 in the acute test methods manual (EPA/821/R-02/012, 2002), the t statistic for the single-effluent concentration acute toxicity test shall be calculated and compared with the critical t set at the 5% level of significance. If the calculated t does not exceed the critical t, then the mean responses for the single treatment and control are declared "not statistically different" and the permittee shall report "Pass" on the DMR form. If the calculated t does exceed the critical t, then the mean responses for the single treatment and control are declared "statistically different" and the permittee shall report "Fail" on the DMR form. This Order requires additional toxicity testing if the acute WET permit limit is reported as "Fail" as specified in the Monitoring and Reporting Program.

ATTACHMENT A – DEFINITIONS

Arithmetic Mean (μ)
Also called the average, is the sum of measured values divided by the number of samples. For ambient water concentrations, the arithmetic mean is calculated as follows:

Arithmetic mean = $\mu = \Sigma x / n$ where: Σx is the sum of the measured ambient water concentrations, and n is the number of samples.

Average Monthly Effluent Limitation (AMEL)
The highest allowable average of daily discharges over a calendar month, calculated as the sum of all daily discharges measured during a calendar month divided by the number of daily discharges measured during that month.

Average Weekly Effluent Limitation (AWEL)
The highest allowable average of daily discharges over a calendar week (Sunday through Saturday), calculated as the sum of all daily discharges measured during a calendar week divided by the number of daily discharges measured during that week.

Bioaccumulative
Those substances taken up by an organism from its surrounding medium through gill membranes, epithelial tissue, or from food and subsequently concentrated and retained in the body of the organism.

Carcinogenic
Pollutants are substances that are known to cause cancer in living organisms.

Coefficient of Variation (CV)
CV is a measure of the data variability and is calculated as the estimated standard deviation divided by the arithmetic mean of the observed values.

Daily Discharge
Daily Discharge is defined as either: (1) the total mass of the constituent discharged over the calendar day (12:00 am through 11:59 pm) or any 24-hour period that reasonably represents a calendar day for purposes of sampling (as specified in the permit), for a constituent with limitations expressed in units of mass or; (2) the unweighted arithmetic mean measurement of the constituent over the day for a constituent with limitations expressed in other units of measurement (e.g., concentration).

The daily discharge may be determined by the analytical results of a composite sample taken over the course of one day (a calendar day or other 24-hour period defined as a day) or by the arithmetic mean of analytical results from one or more grab samples taken over the course of the day.

For composite sampling, if 1 day is defined as a 24-hour period other than a calendar day, the analytical result for the 24-hour period will be considered as the result for the calendar day in which the 24-hour period ends.

Detected, but Not Quantified (DNQ)
DNQ are those sample results less than the RL, but greater than or equal to the laboratory's MDL.

Dilution Credit
Dilution Credit is the amount of dilution granted to a discharge in the calculation of a water quality-based effluent limitation, based on the allowance of a specified mixing zone. It is calculated from the dilution ratio or determined through conducting a mixing zone study or modeling of the discharge and receiving water.

Effluent Concentration Allowance (ECA)
ECA is a value derived from the water quality criterion/objective, dilution credit, and ambient background concentration that is used, in conjunction with the coefficient of variation for the effluent monitoring data, to calculate a long-term average (LTA) discharge concentration. The ECA has the same meaning as waste load allocation (WLA) as used in USEPA guidance (Technical Support Document For Water Quality-based Toxics Control, March 1991, second printing, EPA/505/2-90-001).

Enclosed Bays
Enclosed Bays means indentations along the coast that enclose an area of oceanic water within distinct headlands or harbor works. Enclosed bays include all bays where the narrowest distance between the headlands or outermost harbor works is less than 75 percent of the greatest dimension of the enclosed portion of the bay. Enclosed bays include, but are not limited to, Humboldt Bay, Bodega Harbor, Tomales Bay, Drake's Estero, San Francisco Bay, Morro Bay, Los Angeles-Long Beach Harbor, Upper and Lower Newport Bay, Mission Bay, and San Diego Bay. Enclosed bays do not include inland surface waters or ocean waters.

Estimated Chemical Concentration
The estimated chemical concentration that results from the confirmed detection of the substance by the analytical method below the ML value.

Estuaries
Estuaries means waters, including coastal lagoons, located at the mouths of streams that serve as areas of mixing for fresh and ocean waters. Coastal lagoons and mouths of streams that are temporarily separated from the ocean by sandbars shall be considered estuaries. Estuarine waters shall be considered to extend from a bay or the open ocean to a point upstream where there is no significant mixing of fresh water and seawater. Estuarine waters included, but are not limited to, the Sacramento-San Joaquin Delta, as defined in Water Code section 12220, Suisun Bay, Carquinez Strait downstream to the Carquinez Bridge, and appropriate areas of the Smith, Mad, Eel, Noyo, Russian, Klamath, San Diego, and Otay rivers. Estuaries do not include inland surface waters or ocean waters.

First Flush
Storm water runoff that occurs between the time a storm event begins and when a minimum of 1 inch of precipitation has been collected in a rain gauge or equivalent measurement device at a location on the site which is representative of precipitation at the site. A storm event is a period of rainfall that is preceded by at least seven days without rainfall.

High Risk Areas
Areas where wastes or pollutants of significant quantities from ship construction, modification, repair, and maintenance activities (including abrasive blast grit material, primer, paint, paint chips, solvents, oils, fuels, sludges, detergents, cleansers, hazardous substances, toxic pollutants, non-conventional pollutants, materials of petroleum origin, or other substances of water quality significance) are subject to precipitation, run-on, and/or runoff.

Inland Surface Waters
All surface waters of the State that do not include the ocean, enclosed bays, or estuaries.

Instantaneous Maximum Effluent Limitation
The highest allowable value for any single grab sample or aliquot (i.e., each grab sample or aliquot is independently compared to the instantaneous maximum limitation).

Instantaneous Minimum Effluent Limitation
The lowest allowable value for any single grab sample or aliquot (i.e., each grab sample or aliquot is independently compared to the instantaneous minimum limitation).

Maximum Daily Effluent Limitation (MDEL)
The highest allowable daily discharge of a pollutant, over a calendar day (or 24-hour period). For pollutants with limitations expressed in units of mass, the daily discharge is calculated as the total mass of the pollutant discharged over the day. For pollutants with limitations expressed in other units of measurement, the daily discharge is calculated as the arithmetic mean measurement of the pollutant over the day.

Median
The middle measurement in a set of data. The median of a set of data is found by first arranging the measurements in order of magnitude (either increasing or decreasing order). If the number of measurements (n) is odd, then the median = $X_{(n+1)/2}$. If n is even, then the median = $(X_{n/2} + X_{(n/2)+1})/2$ (i.e., the midpoint between the $n/2$ and $n/2+1$).

Method Detection Limit (MDL)
MDL is the minimum concentration of a substance that can be measured and reported with 99 percent confidence that the analyte concentration is greater than zero, as defined in title 40 of the Code of Federal Regulations, Part 136, Attachment B, revised as of July 3, 1999.

Minimum Level (ML)
ML is the concentration at which the entire analytical system must give a recognizable signal and acceptable calibration point. The ML is the concentration in a sample that is equivalent to the concentration of the lowest calibration standard analyzed by a specific analytical procedure, assuming that all the method specified sample weights, volumes, and processing steps have been followed.

Mixing Zone
Mixing Zone is a limited volume of receiving water that is allocated for mixing with a wastewater discharge where water quality criteria can be exceeded without causing adverse effects to the overall water body.

Not Detected (ND)

Sample results which are less than the laboratory's MDL.

Ocean Waters
The territorial marine waters of the State as defined by California law to the extent these waters are outside of enclosed bays, estuaries, and coastal lagoons. Discharges to ocean waters are regulated in accordance with the State Water Board's California Ocean Plan.

Persistent Pollutants
Persistent pollutants are substances for which degradation or decomposition in the environment is nonexistent or very slow.

Pollutant Minimization Program (PMP)
PMP means waste minimization and pollution prevention actions that include, but are not limited to, product substitution, waste stream recycling, alternative waste management methods, and education of the public and businesses. The goal of the PMP shall be to reduce all potential sources of a priority pollutant(s) through pollutant minimization (control) strategies, including pollution prevention measures as appropriate, to maintain the effluent concentration at or below the water quality-based effluent limitation. Pollution prevention measures may be particularly appropriate for persistent bioaccumulative priority pollutants where there is evidence that beneficial uses are being impacted. The Regional Water Board may consider cost effectiveness when establishing the requirements of a PMP. The completion and implementation of a Pollution Prevention Plan, if required pursuant to Water Code section 13263.3(d), shall be considered to fulfill the PMP requirements.

Pollution Prevention
Pollution Prevention means any action that causes a net reduction in the use or generation of a hazardous substance or other pollutant that is discharged into water and includes, but is not limited to, input change, operational improvement, production process change, and product reformulation (as defined in Water Code section 13263.3). Pollution prevention does not include actions that merely shift a pollutant in wastewater from one environmental medium to another environmental medium, unless clear environmental benefits of such an approach are identified to the satisfaction of the State or Regional Water Board.

Reporting Level (RL)
RL is the ML (and its associated analytical method) chosen by the Discharger for reporting and compliance determination from the MLs included in this Order. The MLs included in this Order correspond to approved analytical methods for reporting a sample result that are selected by the Regional Water Board either from Appendix 4 of the SIP in accordance with section 2.4.2 of the SIP or established in accordance with section 2.4.3 of the SIP. The ML is based on the proper application of method-based analytical procedures for sample preparation and the absence of any matrix interferences. Other factors may be applied to the ML depending on the specific sample preparation steps employed. For example, the treatment typically applied in cases where there are matrix-effects is to dilute the sample or sample aliquot by a factor of ten. In such cases, this additional factor must be applied to the ML in the computation of the RL.

Satellite Collection System

The portion, if any, of a sanitary sewer system owned or operated by a different public agency than the agency that owns and operates the wastewater treatment facility that a sanitary sewer system is tributary to.

Significant Materials
Raw materials; fuels; materials such as solvents, detergents, and plastic pellets; finished materials such as metallic products; raw materials used in food processing or production; hazardous substances designated under Section 101 (14) of Comprehensive Environmental Response, Compensation, and Liability Act (CERCLA); and chemical the facility is required to report pursuant to section 313 of Title III of Superfund Amendments and Reauthorization Act (SARA); fertilizers; pesticides; and waste products such as ashes, slag, and sludge that have the potential to be discharged.

Significant Quantities
Volumes, concentrations, or masses of pollutants that can cause or threaten to cause pollution, contamination, or nuisance; adversely impact human health or the environment; and/or cause or contribute to a violation of any applicable water quality standard for the receiving water or any receiving water limitation.

Source of Drinking Water
Any water designated as municipal or domestic supply (MUN) in a Regional Water Board Basin Plan.

Standard Deviation (σ)
Standard Deviation is a measure of variability that is calculated as follows:

$$\sigma = (\Sigma[(x - \mu)^2]/(n - 1))^{0.5}$$

where:
x is the observed value;
μ is the arithmetic mean of the observed values; and
n is the number of samples.

Toxicity Reduction Evaluation (TRE)
TRE is a study conducted in a step-wise process designed to identify the causative agents of effluent or ambient toxicity, isolate the sources of toxicity, evaluate the effectiveness of toxicity control options, and then confirm the reduction in toxicity. The first steps of the TRE consist of the collection of data relevant to the toxicity, including additional toxicity testing, and an evaluation of facility operations and maintenance practices, and best management practices. A Toxicity Identification Evaluation (TIE) may be required as part of the TRE, if appropriate. (A TIE is a set of procedures to identify the specific chemical(s) responsible for toxicity. These procedures are performed in three phases (characterization, identification, and confirmation) using aquatic organism toxicity tests.)

ATTACHMENT B – MAP

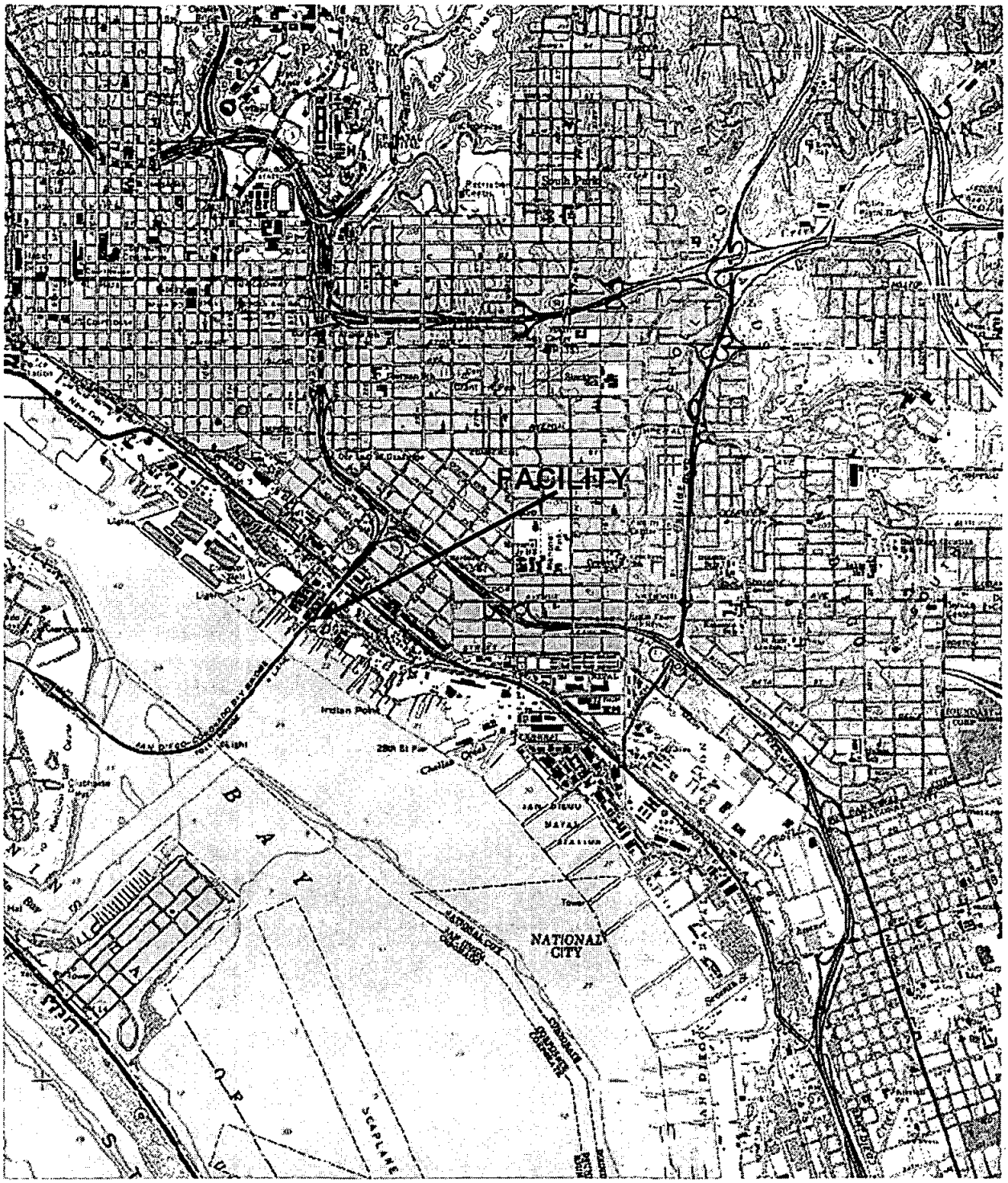

Drawing Reference: **POINT LOMA (CA)** U.S.G.S TOPOGRAPHIC MAP 7.5 MINUTE QUADRANGLE *Photorevised 1975* *Not to scale*	SITE LOCATION MAP CMSD, SAN DIEGO SAN DIEGO COUNTY	N W E S

ATTACHMENT C – FLOW SCHEMATIC

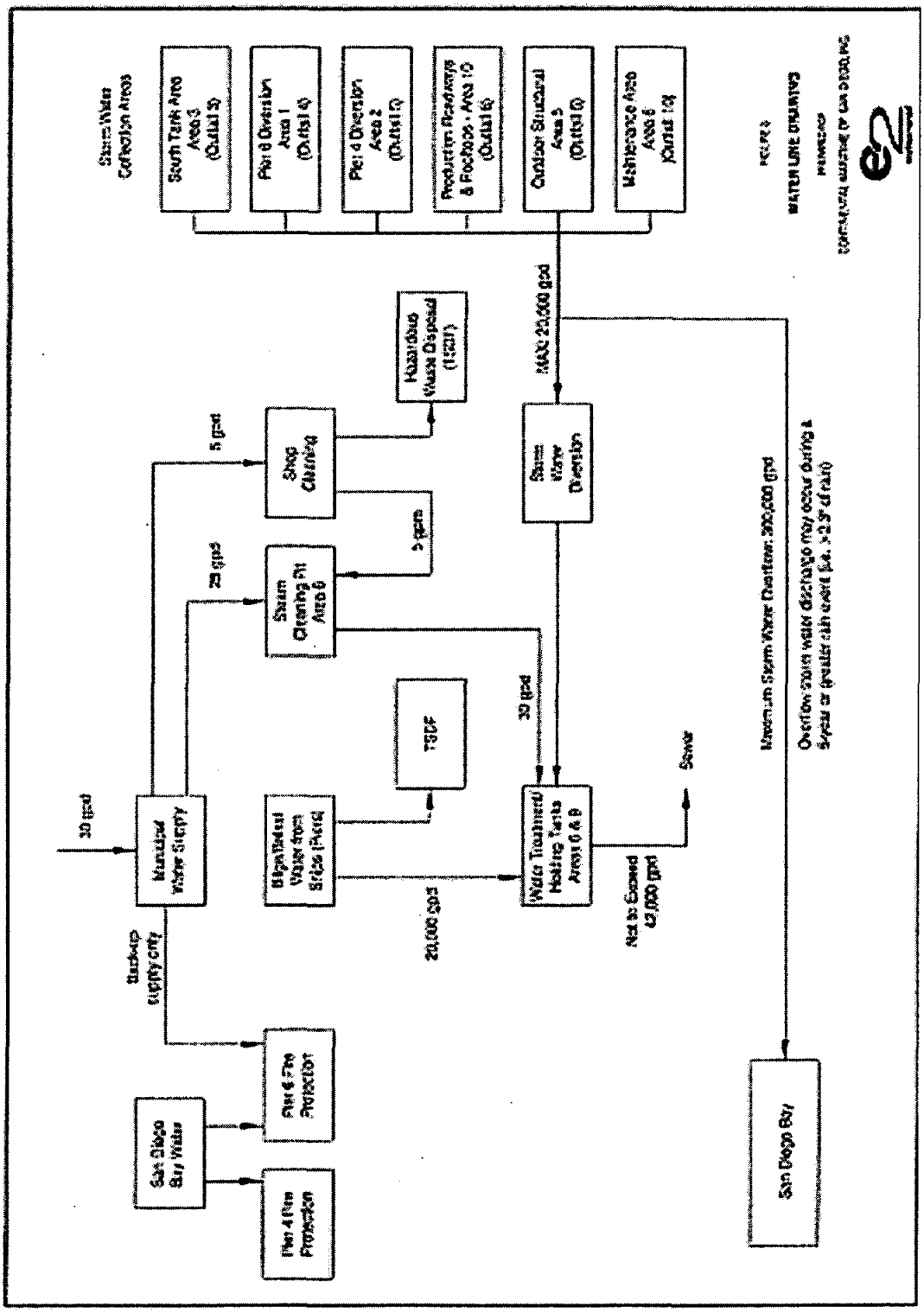

ATTACHMENT D – STANDARD PROVISIONS

I. STANDARD PROVISIONS – PERMIT COMPLIANCE

A. Duty to Comply

1. The Discharger must comply with all of the conditions of this Order. Any noncompliance constitutes a violation of the Clean Water Act (CWA) and the California Water Code and is grounds for enforcement action, for permit termination, revocation and reissuance, or modification; or denial of a permit renewal application. (40 CFR § 122.41(a).)

2. The Discharger shall comply with effluent standards or prohibitions established under section 307(a) of the CWA for toxic pollutants and with standards for sewage sludge use or disposal established under section 405(d) of the CWA within the time provided in the regulations that establish these standards or prohibitions, even if this Order has not yet been modified to incorporate the requirement. (40 CFR § 122.41(a)(1).)

B. Need to Halt or Reduce Activity Not a Defense

It shall not be a defense for a Discharger in an enforcement action that it would have been necessary to halt or reduce the permitted activity in order to maintain compliance with the conditions of this Order. (40 CFR § 122.41(c).)

C. Duty to Mitigate

The Discharger shall take all reasonable steps to minimize or prevent any discharge or sludge use or disposal in violation of this Order that has a reasonable likelihood of adversely affecting human health or the environment. (40 CFR § 122.41(d).)

D. Proper Operation and Maintenance

The Discharger shall at all times properly operate and maintain all facilities and systems of treatment and control (and related appurtenances) which are installed or used by the Discharger to achieve compliance with the conditions of this Order. Proper operation and maintenance also includes adequate laboratory controls and appropriate quality assurance procedures. This provision requires the operation of backup or auxiliary facilities or similar systems that are installed by a Discharger only when necessary to achieve compliance with the conditions of this Order. (40 CFR § 122.41(e).)

E. Propert y Rights

1. This Order does not convey any property rights of any sort or any exclusive privileges. (40 CFR § 122.41(g).)

2. The issuance of this Order does not authorize any injury to persons or property or invasion of other private rights, or any infringement of state or local law or regulations. (40 CFR § 122.5(c).)

F. Inspection and Entry

The Discharger shall allow the Regional Water Board, State Water Board, United States Environmental Protection Agency (USEPA), and/or their authorized representatives (including an authorized contractor acting as their representative), upon the presentation of credentials and other documents, as may be required by law, to (40 CFR § 122.41(i); Wat. Code, § 13383):

1. Enter upon the Discharger's premises where a regulated facility or activity is located or conducted, or where records are kept under the conditions of this Order (40 CFR § 122.41(i)(1));

2. Have access to and copy, at reasonable times, any records that must be kept under the conditions of this Order (40 CFR § 122.41(i)(2));

3. Inspect and photograph, at reasonable times, any facilities, equipment (including monitoring and control equipment), practices, or operations regulated or required under this Order (40 CFR § 122.41(i)(3)); and

4. Sample or monitor, at reasonable times, for the purposes of assuring Order compliance or as otherwise authorized by the CWA or the Water Code, any substances or parameters at any location. (40 CFR § 122.41(i)(4).)

G. Bypass

1. Definitions

   m. "Bypass" *means the intentional diversion of waste streams from any portion of a* treatment facility. (40 CFR § 122.41(m)(1)(i).)

   n. "Severe property damage" means substantial physical damage to property, damage to the treatment facilities, which causes them to become inoperable, or substantial and permanent loss of natural resources that can reasonably be expected to occur in the absence of a bypass. Severe property damage does not mean economic loss caused by delays in production. (40 CFR § 122.41(m)(1)(ii).)

2. Bypass not exceeding limitations. The Discharger may allow any bypass to occur which does not cause exceedances of effluent limitations, but only if it is for essential maintenance to assure efficient operation. These bypasses are not subject to the provisions listed in Standard Provisions – Permit Compliance I.G.3, I.G.4, and I.G.5 below. (40 CFR § 122.41(m)(2).)

3. Prohibition of bypass. Bypass is prohibited, and the Regional Water Board may take enforcement action against a Discharger for bypass, unless (40 CFR § 122.41(m)(4)(i)):

   a. Bypass was unavoidable to prevent loss of life, personal injury, or severe property damage (40 CFR § 122.41(m)(4)(i)(A));

b. There were no feasible alternatives to the bypass, such as the use of auxiliary treatment facilities, retention of untreated wastes, or maintenance during normal periods of equipment downtime. This condition is not satisfied if adequate back-up equipment should have been installed in the exercise of reasonable engineering judgment to prevent a bypass that occurred during normal periods of equipment downtime or preventive maintenance (40 CFR § 122.41(m)(4)(i)(B)); and

c. The Discharger submitted notice to the Regional Water Board as required under Standard Provisions – Permit Compliance I.G.5 below. (40 CFR § 122.41(m)(4)(i)(C).)

4. The Regional Water Board may approve an anticipated bypass, after considering its adverse effects, if the Regional Water Board determines that it will meet the three conditions listed in Standard Provisions – Permit Compliance I.G.3 above. (40 CFR § 122.41(m)(4)(ii).)

5. Notice

a. Anticipated bypass. If the Discharger knows in advance of the need for a bypass, it shall submit a notice, if possible at least 10 days before the date of the bypass. (40 CFR § 122.41(m)(3)(i).)

b. Unanticipated bypass. The Discharger shall submit notice of an unanticipated bypass as required in Standard Provisions - Reporting V.E below (24-hour notice). (40 CFR § 122.41(m)(3)(ii).)

H. Upset

Upset means an exceptional incident in which there is unintentional and temporary noncompliance with technology based permit effluent limitations because of factors beyond the reasonable control of the Discharger. An upset does not include noncompliance to the extent caused by operational error, improperly designed treatment facilities, inadequate treatment facilities, lack of preventive maintenance, or careless or improper operation. (40 CFR § 122.41(n)(1).)

1. Effect of an upset. An upset constitutes an affirmative defense to an action brought for noncompliance with such technology based permit effluent limitations if the requirements of Standard Provisions – Permit Compliance I.H.2 below are met. No determination made during administrative review of claims that noncompliance was caused by upset, and before an action for noncompliance, is final administrative action subject to judicial review. (40 CFR § 122.41(n)(2).)

2. Conditions necessary for a demonstration of upset. A Discharger who wishes to establish the affirmative defense of upset shall demonstrate, through properly signed, contemporaneous operating logs or other relevant evidence that (40 CFR § 122.41(n)(3)):

a. An upset occurred and that the Discharger can identify the cause(s) of the upset (40 CFR § 122.41(n)(3)(i));

b. The permitted facility was, at the time, being properly operated (40 CFR § 122.41(n)(3)(ii));

c. The Discharger submitted notice of the upset as required in Standard Provisions – Reporting V.E.2.b below (24-hour notice) (40 CFR § 122.41(n)(3)(iii)); and

d. The Discharger complied with any remedial measures required under Standard Provisions – Permit Compliance I.C above. (40 CFR § 122.41(n)(3)(iv).)

3. Burden of proof. In any enforcement proceeding, the Discharger seeking to establish the occurrence of an upset has the burden of proof. (40 CFR § 122.41(n)(4).)

II. STANDARD PROVISIONS – PERMIT ACTION

A. General

This Order may be modified, revoked and reissued, or terminated for cause. The filing of a request by the Discharger for modification, revocation and reissuance, or termination, or a notification of planned changes or anticipated noncompliance does not stay any Order condition. (40 CFR § 122.41(f).)

B. Duty to Reapply

If the Discharger wishes to continue an activity regulated by this Order after the expiration date of this Order, the Discharger must apply for and obtain a new permit. (40 CFR § 122.41(b).)

C. Transfers

This Order is not transferable to any person except after notice to the Regional Water Board. The Regional Water Board may require modification or revocation and reissuance of the Order to change the name of the Discharger and incorporate such other requirements as may be necessary under the CWA and the Water Code. (40 CFR § 122.41(l)(3); § 122.61.)

III. STANDARD PROVISIONS – MONITORING

A. Samples and measurements taken for the purpose of monitoring shall be representative of the monitored activity. (40 CFR § 122.41(j)(1).)

B. Monitoring results must be conducted according to test procedures under Part 136 or, in the case of sludge use or disposal, approved under Part 136 unless otherwise specified in Part 503 unless other test procedures have been specified in this Order. (40 CFR § 122.41(j)(4); § 122.44(i)(1)(iv).)

IV. STANDARD PROVISIONS – RECORDS

A. Except for records of monitoring information required by this Order related to the Discharger's sewage sludge use and disposal activities, which shall be retained for a period of at least five years (or longer as required by Part 503), the Discharger shall retain records of all monitoring information, including all calibration and maintenance records and all original strip chart recordings for continuous monitoring instrumentation, copies of all reports required by this Order, and records of all data used to complete the application for this Order, for a period of at least three (3) years from the date of the sample, measurement, report or application. This period may be extended by request of the Regional Water Board Executive Officer at any time. (40 CFR § 122.41(j)(2).)

B. Records of monitoring information shall include:

1. The date, exact place, and time of sampling or measurements (40 CFR § 122.41(j)(3)(i));
2. The individual(s) who performed the sampling or measurements (40 CFR § 122.41(j)(3)(ii));
3. The date(s) analyses were performed (40 CFR § 122.41(j)(3)(iii));
4. The individual(s) who performed the analyses (40 CFR § 122.41(j)(3)(iv));
5. The analytical techniques or methods used (40 CFR § 122.41(j)(3)(v)); and
6. The results of such analyses. (40 CFR § 122.41(j)(3)(vi).)

C. Claims of confidentiality for the following information will be denied (40 CFR § 122.7(b)):

1. The name and address of any permit applicant or Discharger (40 CFR § 122.7(b)(1)); and
2. Permit applications and attachments, permits and effluent data. (40 CFR § 122.7(b)(2).)

V. ST ANDARD PROVISIONS – REPORTING

A. Duty to Provide Information

The Discharger shall furnish to the Regional Water Board, State Water Board, or USEPA within a reasonable time, any information which the Regional Water Board, State Water Board, or USEPA may request to determine whether cause exists for modifying, revoking and reissuing, or terminating this Order or to determine compliance with this Order. Upon request, the Discharger shall also furnish to the Regional Water Board, State Water Board, or USEPA copies of records required to be kept by this Order. (40 CFR § 122.41(h); Wat. Code, § 13267.)

B. Signatory and Certification Requirements

1. All applications, reports, or information submitted to the Regional Water Board, State Water Board, and/or USEPA shall be signed and certified in accordance with Standard Provisions – Reporting V.B.2, V.B.3, V.B.4, and V.B.5 below. (40 CFR § 122.41(k).)

2. All permit applications shall be signed by a responsible corporate officer. For the purpose of this section, a responsible corporate officer means: (i) A president, secretary, treasurer, or vice-president of the corporation in charge of a principal business function, or any other person who performs similar policy- or decision-making functions for the corporation, or (ii) the manager of one or more manufacturing, production, or operating facilities, provided, the manager is authorized to make management decisions which govern the operation of the regulated facility including having the explicit or implicit duty of making major capital investment recommendations, and initiating and directing other comprehensive measures to assure long term environmental compliance with environmental laws and regulations; the manager can ensure that the necessary systems are established or actions taken to gather complete and accurate information for permit application requirements; and where authority to sign documents has been assigned or delegated to the manager in accordance with corporate procedures. (40 CFR § 122.22(a)(1).)

3. All reports required by this Order and other information requested by the Regional Water Board, State Water Board, or USEPA shall be signed by a person described in Standard Provisions – Reporting V.B.2 above, or by a duly authorized representative of that person. A person is a duly authorized representative only if:

   a. The authorization is made in writing by a person described in Standard Provisions – Reporting V.B.2 above (40 CFR § 122.22(b)(1));

   b. The authorization specifies either an individual or a position having responsibility for the overall operation of the regulated facility or activity such as the position of plant manager, operator of a well or a well field, superintendent, position of equivalent responsibility, or an individual or position having overall responsibility for environmental matters for the company. (A duly authorized representative may thus be either a named individual or any individual occupying a named position.) (40 CFR § 122.22(b)(2)); and

   c. The written authorization is submitted to the Regional Water Board and State Water Board. (40 CFR § 122.22(b)(3).)

4. If an authorization under Standard Provisions – Reporting V.B.3 above is no longer accurate because a different individual or position has responsibility for the overall operation of the facility, a new authorization satisfying the requirements of Standard Provisions – Reporting V.B.3 above must be submitted to the Regional Water Board and State Water Board prior to or together with any reports, information, or applications, to be signed by an authorized representative. (40 CFR § 122.22(c).)

5. Any person signing a document under Standard Provisions – Reporting V.B.2 or V.B.3 above shall make the following certification:

"I certify under penalty of law that this document and all attachments were prepared under my direction or supervision in accordance with a system designed to assure that qualified personnel properly gather and evaluate the information submitted. Based on my inquiry of the person or persons who manage the system or those persons directly responsible for gathering the information, the information submitted is, to the best of my knowledge and belief, true, accurate, and complete. I am aware that there are significant penalties for submitting false information, including the possibility of fine and imprisonment for knowing violations." (40 CFR § 122.22(d).)

C. Monitoring Reports

1. Monitoring results shall be reported at the intervals specified in the Monitoring and Reporting Program (Attachment E) in this Order. (40 CFR § 122.22(l)(4).)

2. Monitoring results must be reported on a Discharge Monitoring Report (DMR) form or forms provided or specified by the Regional Water Board or State Water Board for reporting results of monitoring of sludge use or disposal practices. (40 CFR § 122.41(l)(4)(i).)

3. If the Discharger monitors any pollutant more frequently than required by this Order using test procedures approved under Part 136 or, in the case of sludge use or disposal, approved under Part 136 unless otherwise specified in Part 503, or as specified in this Order, the results of this monitoring shall be included in the calculation and reporting of the data submitted in the DMR or sludge reporting form specified by the Regional Water Board. (40 CFR § 122.41(l)(4)(ii).)

4. Calculations for all limitations, which require averaging of measurements, shall utilize an arithmetic mean unless otherwise specified in this Order. (40 CFR § 122.41(l)(4)(iii).)

D. Compliance Schedules

Reports of compliance or noncompliance with, or any progress reports on, interim and final requirements contained in any compliance schedule of this Order, shall be submitted no later than 14 days following each schedule date. (40 CFR § 122.41(l)(5).)

E. T wenty-Four Hour Reporting

1. The Discharger shall report any noncompliance that may endanger health or the environment. Any information shall be provided orally within 24 hours from the time the Discharger becomes aware of the circumstances. A written submission shall also be provided within five (5) days of the time the Discharger becomes aware of the circumstances. The written submission shall contain a description of the noncompliance and its cause; the period of noncompliance, including exact dates and times, and if the noncompliance has not been corrected, the anticipated time it is expected to continue; and steps taken or planned to reduce, eliminate, and prevent reoccurrence of the noncompliance. (40 CFR § 122.41(l)(6)(i).)

2. The following shall be included as information that must be reported within 24 hours under this paragraph (40 CFR § 122.41(l)(6)(ii)):

   a. Any unanticipated bypass that exceeds any effluent limitation in this Order. (40 CFR § 122.41(l)(6)(ii)(A).)

   b. Any upset that exceeds any effluent limitation in this Order. (40 CFR § 122.41(l)(6)(ii)(B).)

3. The Regional Water Board may waive the above-required written report under this provision on a case-by-case basis if an oral report has been received within 24 hours. (40 CFR § 122.41(l)(6)(iii).)

F. Planned Changes

The Discharger shall give notice to the Regional Water Board as soon as possible of any planned physical alterations or additions to the permitted facility. Notice is required under this provision only when (40 CFR § 122.41(l)(1)):

1. The alteration or addition to a permitted facility may meet one of the criteria for determining whether a facility is a new source in section 122.29(b) (40 CFR § 122.41(l)(1)(i)); or

2. The alteration or addition could significantly change the nature or increase the quantity of pollutants discharged. This notification applies to pollutants that are not subject to effluent limitations in this Order. (40 CFR § 122.41(l)(1)(ii).)

3. The alteration or addition results in a significant change in the Discharger's sludge use or disposal practices, and such alteration, addition, or change may justify the application of permit conditions that are different from or absent in the existing permit, including notification of additional use or disposal sites not reported during the permit application process or not reported pursuant to an approved land application plan. (40 CFR§ 122.41(l)(1)(iii).)

G. Anticipated Noncompliance

The Discharger shall give advance notice to the Regional Water Board or State Water Board of any planned changes in the permitted facility or activity that may result in noncompliance with General Order requirements. (40 CFR § 122.41(l)(2).)

H. Other Noncompliance

The Discharger shall report all instances of noncompliance not reported under Standard Provisions – Reporting V.C, V.D, and V.E above at the time monitoring reports are submitted. The reports shall contain the information listed in Standard Provision – Reporting V.E above. (40 CFR § 122.41(l)(7).)

I. Other Information

When the Discharger becomes aware that it failed to submit any relevant facts in a permit application, or submitted incorrect information in a permit application or in any report to the Regional Water Board, State Water Board, or USEPA, the Discharger shall promptly submit such facts or information. (40 CFR § 122.41(l)(8).)

VI. STANDARD PROVISIONS – ENFORCEMENT

A. The Regional Water Board is authorized to enforce the terms of this permit under several provisions of the Water Code, including, but not limited to, sections 13385, 13386, and 13387

VII. ADDITIONAL PROVISIONS – NOTIFICATION LEVELS

A. Non-Municipal Facilities

Existing manufacturing, commercial, mining, and silvicultural Dischargers shall notify the Regional Water Board as soon as they know or have reason to believe (40 CFR § 122.42(a)):

1. That any activity has occurred or will occur that would result in the discharge, on a routine or frequent basis, of any toxic pollutant that is not limited in this Order, if that discharge will exceed the highest of the following "notification levels" (40 CFR § 122.42(a)(1)):

a. 100 micrograms per liter (µg/L) (40 CFR § 122.42(a)(1)(i));

b. 200 µg/L for acrolein and acrylonitrile; 500 µg/L for 2,4-dinitrophenol and 2-methyl-4,6-dinitrophenol; and 1 milligram per liter (mg/L) for antimony (40 CFR § 122.42(a)(1)(ii));

c. Five (5) times the maximum concentration value reported for that pollutant in the Report of Waste Discharge (40 CFR § 122.42(a)(1)(iii)); or

d. The level established by the Regional Water Board in accordance with section 122.44(f). (40 CFR § 122.42(a)(1)(iv).)

2. That any activity has occurred or will occur that would result in the discharge, on a non-routine or infrequent basis, of any toxic pollutant that is not limited in this Order, if that discharge will exceed the highest of the following "notification levels" (40 CFR § 122.42(a)(2)):

a. 500 micrograms per liter (µg/L) (40 CFR § 122.42(a)(2)(i));

b. 1 milligram per liter (mg/L) for antimony (40 CFR § 122.42(a)(2)(ii));

c. Ten (10) times the maximum concentration value reported for that pollutant in the Report of Waste Discharge (40 CFR § 122.42(a)(2)(iii)); or

d. The level established by the Regional Water Board in accordance with section 122.44(f). (40 CFR § 122.42(a)(2)(iv).)

ATTACHMENT E – MONITORING AND REPORTING PROGRAM

Table of Contents

I. General Monitoring Provisions E-2
II. Monitoring Locations E-3
III. Influent Monitoring Requirements – Not Applicable E-3
IV. Effluent Monitoring Requirements – See Section v for acute toxicity monitoring requirements E-3
V. Whole Effluent Toxicity Testing Requirements E-4
VI. Land Discharge Monitoring Requirements – Not Applicable E-7
VII. Reclamation Monitoring Requirements – Not Applicable E-7
VIII. Receiving Water Monitoring Requirements – Surface Water E-7
A. Monitoring Location RW-001 ..... E-7
IX. Other Monitoring Requirements E-7
A. Storm Water E-7
B. Spill and Illicit Discharge Log E-11
C. Chemical Utilization Audit E-12
D. Waste Hauling Log E-12
E. Sediment Chemistry Monitoring E-13
X. Reporting Requirements E-19
A. General Monitoring and Reporting Requirements E-19
B. Self Monitoring Reports (SMRs) E-19
C. Discharge Monitoring Reports (DMRs) E-22
D. Other Reports E-23

List of Tables

Table E-1. Monitoring Station Locations E-3
Table E-2. Receiving Water Monitoring Requirements E-7
Table E-3. Monitoring Requirements for Industrial Storm Water Discharges E-9
Table E-4. Station Location General Guidelines E-14
Table E-5. Sediment Chemistry Methods and Detection Limits E-15
Table E-6. Sediment Sampling Site Coordinates (Lambert/California Coordinates) E-18
Table E-7. Ref. Station Sampling Site Coordinates (Lambert/California Coordinates) E-19
Table E-8. Monitoring Periods and Reporting Schedule E-20
Table E-9. Reporting Requirements for Special Provisions Progress Reports E-23

ATTACHMENT E – MONITORING AND REPORTING PROGRAM (MRP)

The Code of Federal Regulations section 122.48 requires that all NPDES permits specify monitoring and reporting requirements. Water Code sections 13267 and 13383 also authorize the Regional Water Quality Control Board (Regional Water Board) to require technical and monitoring reports. This MRP establishes monitoring and reporting requirements, which implement the federal and California regulations.

I. GENERAL MONITORING PROVISIONS

A. Samples and measurements taken as required herein shall be representative of the volume and nature of the monitored discharge. All samples shall be taken at the monitoring locations specified below and, unless otherwise specified, before the monitoring flow joins or is diluted by any other waste stream, body of water, or substance. Monitoring locations shall not be changed without notification to and the approval of this Regional Water Board.

B. Monitoring must be conducted according to USEPA test procedures approved at 40 CFR 136, Guidelines Establishing Test Procedures for the Analysis of Pollutants under the Clean Water Act as amended, unless other test procedures are specified in Order No. R9-2008-0049 and/or this MRP and/or this Regional Water Board

C. A copy of the monitoring and reports signed, and certified as required by Attachment D, Standard Provisions V.B, of Order No. R9-2008-0049, shall be submitted to the Regional Water Board at the address listed in section X.B.7.c this MRP.

D. The Discharger shall retain records of all monitoring information, including all calibration and maintenance records and all original strip chart recordings for continuous monitoring, instrumentation, copies of all reports required by Order No. R9-2008-0049 and this MRP, and records of all data used to complete the application for Order No. R9-2008-0049. Records shall be maintained for a minimum of 5 years from the date of sample, measurement, report, or application. This period may be extended by request of this Regional Water Board or by the USEPA at any time.

E. All analyses shall b e performed in a laboratory certified to perform such analyses by the California Department of Health Services or by a laboratory approved by the Regional Water Board.

F. The Discharger shall report in its cover letter all instances of noncompliance not reported under Attachment D, section V.C of Order No. R9-2008-0049 at the time monitoring reports are submitted. The reports shall contain the information listed in Attachment D, section IV.B of Order No. R9-2008-0049.

G. All monitoring instruments and devices used by the Discharger to fulfill the prescribed monitoring program shall be properly maintained and calibrated as necessary to ensure their continued accuracy. All flow measurement devices shall be calibrated at least once per year to ensure continued accuracy of the devices.

H. Monitoring results shall be reported at intervals and in a manner specified in Order No. R9-2008-0049 or in this Monitoring and Reporting Program.

I. This Monitoring and Reporting Program may be modified by this Regional Water Board as appropriate.

J. This Order may be modified by the Regional Board and EPA to enable the discharger to participate in comprehensive regional monitoring activities conducted in the Regional Harbor Monitoring Program. Minor changes may be made without further public notice.

II. MONITORING LOCATIONS

The Discharger shall establish the following monitoring locations to demonstrate compliance with the effluent limitations, discharge specifications, and other requirements in this Order:

Table E-1. Monitoring Station Locations

Discharge Location No.	Monitoring Location Name	Monitoring Location Description
003	SW-003	A location where a representative sample of the storm water being discharged to the San Diego Bay can be obtained: 32° 41' 38" N; 117° 8' 52" W
004	SW-004	A location where a representative sample of the storm water being discharged to the San Diego Bay can be obtained: 32° 41' 38" N; 117° 8' 53" W
005	SW-005	A location where a representative sample of the storm water being discharged to the San Diego Bay can be obtained: 32° 41' 41" N; 117° 8' 57" W
006	SW-006	A location where a representative sample of the storm water being discharged to the San Diego Bay can be obtained: 32° 41' 37" N; 117° 9' 3" W
007	SW-007	A location where a representative sample of the municipal storm water discharge to the San Diego Bay can be obtained: 32° 41' 43" N; 117° 8' 59" W
008	SW-008	A location where a representative sample of the storm water being discharged to the San Diego Bay can be obtained: 32° 41' 45" N; 117° 8' 50" W
009	SW-009	A location where a representative sample of the storm water being discharged to the San Diego Bay can be obtained: 32° 41' 44" N; 117° 8' 52" W
010	SW-010	A location where a representative sample of the storm water being discharged to the San Diego Bay can be obtained: 32° 41' 42" N; 117° 8' 53" W
--	RW-001	A location where a representative sample of the receiving water can be obtained, outside the influence of ALL Facility discharges.

III. INFLUENT MONITORING REQUIREMENTS – NOT APPLICABLE

IV. EFFLUENT MONITORING REQUIREMENTS – SEE SECTION V FOR ACUTE TOXICITY MONITORING REQUIREMENTS

V. WHOLE EFFLUENT T OXICITY TESTING REQUIREMENTS

A. Monitoring Frequency

The Discharger shall analyze a representative sample from each area at the Facility at which industrial activities are conducted for acute toxicity during at least two storm water discharge events annually on grab effluent samples. If a single representative sample for an industrial area is not feasible, monitoring of individual discharge points for that area is required. Once each year (July-June), at a different time of year from the previous years, the permittee shall split a single effluent sample and concurrently conduct two toxicity tests using a fish and an invertebrate species; the permittee shall then continue to conduct routine toxicity testing using the single, most sensitive species, including testing for accelerated monitoring, until the next sensitivity testing the following year. The split sample must be from a sample location which most toxicity is expected and, if possible, at a different location from the previous years.

During years 1 and 5 of the Order, a split of each sample shall be analyzed for all other monitored parameters at the minimum frequency of analysis specified by the effluent monitoring program. Sampling shall occur during storm events. If there are no storm events in the first year then sampling shall occur as soon as possible, likewise for the fifth year, if conditions for administrative extension are met.

B. Marine and Estuarine Species and Test Methods

Species and short-term test methods for estimating the acute toxicity of NPDES effluents are found in the fifth edition of Methods for Measuring the Acute Toxicity of Effluents and Receiving Waters to Freshwater and Marine Organisms (EPA/821/R-02/012, 2002; Table IA, 40 CFR Part 136). In a 96-hour static renewal test, the renewal shall be made at 48-hours using the original effluent sample. The permittee shall conduct 96-hour static renewal toxicity tests with the following vertebrate species:

- The topsmelt, Atherinops affinis [Larval Survival and Growth Test Method 1006.0 (Daily observations for mortality make it possible to calculate acute toxicity for desired exposure periods (i.e., 96-hour Pass-Fail test)] in the first edition of Short-term Methods for Estimating the Chronic Toxicity of Effluents and Receiving Waters to West Coast Marine and Estuarine Organisms (EPA/600/R-95/136, 1995) (specific to Pacific Coast waters));

And the following invertebrate species:

- The West Coast mysid, Holmesimysis costata (Table 19 in the acute test methods manual) (specific to Pacific Coast waters);

- The mysid, Americamysis bahia, only if Holmesimysis costata is not available.(Acute Toxicity Test Method 2007.0).

C. Compliance determination

The determination of Pass or Fail from a single-effluent-concentration (paired) acute toxicity test shall be determined using a one-tailed hypothesis test (t-test). As specified in Section 11.3 of the acute test methods manual (EPA/821/R-02/012, 2002), the t statistic for the single-effluent concentration acute toxicity test shall be calculated and compared with the critical t set at the 5% level of significance. If the calculated t does not exceed the critical t, then the mean responses for the single treatment and control are declared "not statistically different" and the permittee shall report "Pass" on the DMR form. If the calculated t does exceed the critical t, then the mean responses for the single treatment and control are declared "statistically different" and the permittee shall report "Fail" on the DMR form. This permit requires additional toxicity testing if the acute WET permit limit is reported as "Fail".

D. Quality Assurance

1. Quality assurance measures, instructions, and other recommendations and requirements are found in the test methods manual previously referenced. Additional requirements are specified, below.

2. This discharge is subject to a determination of Pass or Fail from a single-effluent-concentration (paired) acute toxicity test using a one-tailed hypothesis test called a t-test. The acute instream waste concentration (IWC) for this discharge is 100% effluent. The 100% effluent concentration and a control shall be tested.

3. Control water shall be prepared and used as specified in the test methods manual Methods for Measuring the Acute Toxicity of Effluents and Receiving Waters to Freshwater and Marine Organisms (EPA/821/R-02/012, 2002); and/or, for Atherinops affinis, Short-term Methods for Estimating the Chronic Toxicity of Effluents and Receiving Waters to West Coast Marine and Estuarine Organisms (EPA/600/R-95/136, 1995).

4. If organisms are not cultured in-house, then concurrent testing with a reference toxicant shall be conducted. If organisms are cultured in-house, then monthly reference toxicant testing is sufficient. Reference toxicant tests and effluent toxicity tests shall be conducted using the same test conditions (e.g., same test duration, etc.).

5. If either the reference toxicant or effluent toxicity tests do not meet all test acceptability criteria in the test methods manual, then the permittee must resample and retest at the next storm event.

6. Not Applicable - Following Paragraph 12.2.6.2 of the test methods manual, all acute toxicity test results from the multi-concentration tests required by this permit must be reviewed and reported according to USEPA guidance on the evaluation of concentration-response relationships found in Method Guidance and Recommendations for Whole Effluent Toxicity (WET) Testing (40 CFR 136) (EPA/821/B-00/004, 2000).

7. Within-test variability of individual toxicity tests should be reviewed for acceptability and variability criteria (upper and lower PMSD bounds) should be applied, as directed under Section 12.2.8 - Test Variability of the test methods manual, Methods for Measuring the Acute Toxicity of Effluents and Receiving Waters to Freshwater and Marine Organisms. Under Section 12.2.8, the calculated percent minimum significant difference (PMSD) for both reference toxicant test and effluent toxicity test results must be compared with the upper and lower PMSD bounds variability criteria specified in Table 3-6 - Range of Relative Variability for Endpoints of Promulgated WET Methods, Defined by the 10th and 90th Percentiles from the Data Set of Reference Toxicant Tests, taken from Understanding and Accounting for Method Variability in Whole Effluent Toxicity Applications Under the National Pollutant Discharge Elimination System Program (EPA/833/R-00/003, 2000), following the review criteria in Paragraphs 12.2.8.2.1 and 12.2.8.2 of the test methods manual. Based on this review, only accepted effluent toxicity test results shall be reported on the DMR form. If excessive within-test variability invalidates a test result, then the permittee must resample and retest at the next storm event.

E. A ccelerated Toxicity Testing and TRE/TIE Process

1. If an acute WET permit limit is exceeded and the likely source of toxicity is known (e.g., a temporary plant upset), then the permittee shall conduct one additional toxicity test using the same species and test method. This test shall begin at the next storm event. If the additional toxicity test does not exceed an acute WET permit limit, then the permittee may return to their regular testing frequency. The determination of the likely source of toxicity must be demonstrated by implementing the first two parts of the TRE workplan (VI.C.2.a.i. (a) and (b) of this Order).

2. If an acute WET permit limit is exceeded and the source of toxicity is not known, then the permittee shall conduct accelerated toxicity testing using the same species and test method. The accelerated toxicity monitoring shall include monitoring of the next 4 storm events. This testing shall begin at the next storm event. If none of the additional toxicity tests exceed an acute WET permit limit or trigger, then the permittee may return to their regular testing frequency.

3. If one of the additional toxicity tests exceeds an acute WET permit limit, then, at the next storm event, the permittee shall initiate a TRE as specified in section VI.C.2.a of the Order.

4. Any TIE conducted as a part of the TRE as specified in section VI.C.2.a of this Order shall be based on the same sample that exhibited toxicity and not from samples collected during subsequent storm events. Therefore, the discharger shall collect additional sample volume, sufficient for a TIE, when in an accelerated testing phase.

F. Reporting of Acute Toxicity Monitoring Results

1. A full laboratory report for all toxicity testing shall be submitted as an attachment to the DMR for the month in which the toxicity test was conducted and shall also include: the toxicity test results—for determination of Pass/Fail; LC50; TUa = 100/LC50; NOAEC; TUa = 100/NOAEC—reported according to the test methods

manual chapter on report preparation and test review; the dates of sample collection and initiation of each toxicity test; all results for effluent parameters monitored concurrently with the toxicity test(s); and progress reports on TRE/TIE investigations.

2. The permittee shall notify the permitting authority in writing within 14 days of exceedance of an acute WET permit limit or trigger. This notification shall describe actions the permittee has taken or will take to investigate, identify, and correct the causes of toxicity; the status of actions required by this permit; and schedule for actions not yet completed; or reason(s) that no action has been taken.

VI. LAND DISCHARGE MONITORING REQUIREMENTS – NOT APPLICABLE

VII. RECLAMATION MONITORING REQUIREMENTS – NOT APPLICABLE

VIII. RECEIVING WATER MONITORING REQUIREMENTS – SURFACE WATER

A. Monitoring Location RW-001

1. The Discharger shall monitor the San Diego Bay at RW-001 as follows:

Table E-2. Receiving Water Monitoring Requirements

Parameter	Units	Sample Type	Minimum Sampling Frequency	Required Analytical Test Method
CTR Priority Pollutants[2]	µg/L	Grab	1/year	[1]

[1] As specified in 40 CFR 136
[2] Samples shall be analyzed for copper according to method 1638 or 1640. The commonly used methods 6010B (Inorganics by ICP-Atomic Emission Spectroscopy) and 200.7 (Trace Elements-ICP) have been found to give inaccurate copper readings in saline-matrix samples due to interference with the sodium-argon complex, which has a molecular weight similar to copper. Method 1638 (ICP/MS) or 1640 (On-Line Chelation) will eliminate the sodium-argon complex before the sample is tested for copper. No inaccurate readings for other metals in a saline-matrix sample is analyzed by methods 6010B or 200.7 are known.

IX. OTHER MONITORING REQUIREMENTS

A. Storm Water

1. Non-Storm Water Discharge Visual Observations

a. The Discharger shall visually observe all drainage areas within its Facility for the presence of unauthorized non-storm water discharges.

b. Visual observations shall document the presence of any discoloration, stains, odors, floating materials, etc., as well as the source of any discharge (if known). Records shall be maintained of the visual observation dates, locations observed, observations, and response taken to eliminate unauthorized non-storm water discharges and to reduce or prevent pollutants from contacting non-storm water discharges. The BMP Plan Manual shall be revised, as necessary, and implemented in accordance with Order No. R9-2008-0049.

c. The visual observations required above shall be conducted as follows:

For high risk areas (defined in Attachment A of this Order), the Discharger shall conduct monthly visual observations, during daylight scheduled Facility operating hours[1], on days with no discharges of storm water runoff associated with industrial activities.

For all other areas, the Discharger shall conduct quarterly visual observations in during daylight scheduled Facility operating hours, on days with no discharges of storm water runoff associated with industrial activities. Quarterly visual observations shall be conducted in each of the following periods: January-March, April-June, July-September, and October-December. The Discharger shall conduct quarterly visual observations within 6-18 weeks of each other.

2. Storm Water Discharge Visual Observations

a. Visual observations are required of all discharges of storm water associated with industrial activity occurring during daylight hours that are preceded by at least 7 days without a storm water discharge.

b. Visual observations of storm water runoff associated with industrial activity shall document the presence of any floating and suspended material, oil and grease, discoloration, turbidity, odor, and source of any pollutants. Records shall be maintained of observation dates, locations, observations, and response taken to reduce or prevent pollutants in discharges. The BMP Plan Manual shall be revised, as necessary, and implemented in accordance with Attachment G.

c. Storm water discharge visual observations shall be conducted as follows:

i. For high risk areas, the Discharger shall conduct visual observations of discharges of storm water runoff associated with industrial activity from high risk areas, during each storm event. These visual observations shall occur during the first hour of discharge and at all discharge locations. Visual observations of stored or contained storm water shall occur at the time of release.

ii. For all other areas, the Discharger shall conduct visual observations of discharges of storm water runoff associated with industrial activity from all other areas during one storm event per month during the wet season (October 1-May 30). These visual observations shall occur during the first hour of discharge and at all discharge locations. Visual observations of stored or contained storm water shall occur at the time of release.

3. Sampling and Analysis

[1] "Scheduled facility operating hours" are the time periods when the facility is staffed to conduct any function related to industrial activity, but excluding time periods where only routine maintenance, emergency response, security, and/or janitorial services are performed.

a. The Discharger shall collect storm water samples during the first hour of discharge from:

   i. the first storm event of the wet season that produces discharges, and

   ii. at least one other storm event in the wet season that produces discharges.

   All storm water monitoring locations (Monitoring Location Nos. SW-003 through SW-010) shall be sampled. Sampling of stored or contained storm water shall occur prior to or at the time the stored or contained storm water is released. If a sample is not collected from the first storm of the wet season that produces discharges, the Discharger is still required to collect samples from two other storms of the wet season that produce discharges. The Discharger shall explain in the Storm Water Annual Report why the first storm that produces discharges was not sampled. If a sample cannot be taken during the first hour of a discharge, the Discharger shall explain why the samples could not be taken during this period of time.

b. Samples shall be collected from discharges of storm water that are preceded by at least 7 days without storm water discharge.

c. The samples shall be analyzed according to Table E-3. Monitoring Requirements for Industrial Storm Water Discharge.

Table E-3. Monitoring Requirements for Industrial Storm Water Discharges

Parameter	Unit	Sample Type	Minimum Frequency*	Required Analytical Test Method
Discharge Volume	gallons	Estimate [1]	2 storms per year	Estimate
Total Petroleum Hydrocarbons (TPH)	mg/L	Grab	2 storms per year	[2]
Total Suspended Solids	mg/L	Grab	2 storms per year	[2]
Settleable Solids	ml/L	Grab	2 storms per year	[2]
pH	pH Units	Grab	2 storms per year	[2]
Arsenic, Total Recoverable	µg/L	Grab	2 storms per year	[2]
Cadmium, Total Recoverable	µg/L	Grab	2 storms per year	[2]
Chromium, Total Recoverable	µg/L	Grab	2 storms per year	[2]
Copper, Total Recoverable	µg/L	Grab	2 storms per year	[2,4]
Lead, Total Recoverable	µg/L	Grab	2 storms per year	[2]
Mercury, Total Recoverable	µg/L	Grab	2 storms per year	[2]
Nickel, Total Recoverable	µg/L	Grab	2 storms per year	[2]
Silver, Total Recoverable	µg/L	Grab	2 storms per year	[2]

Parameter	Unit	Sample Type	Minimum Frequency*	Required Analytical Test Method
Zinc, Total Recoverable	µg/L	Grab	2 storms per year	[2]
Chemical Oxygen Demand (COD)	mg/L	Grab	2 storms per year	[2]
Tributlytin (TBT)	µg/L	Grab	2 storms per year	[2]
Acute Toxicity[3]	Pass or Fail	Grab	2 storms per year	[2]
Oil & Grease	mg/L	Grab	2 storms per year	[2]
Total Organic Carbon (TOC)	mg/L	Grab	2 storms per year	[2]
Specific Conductance	µmho/cm	Measurement	2 storms per year	[2]
Remaining CTR Priority Pollutants[5]	µg/L	grab	2 storms in year one 2 storms in year five	[2]

* Sampling shall occur during storm events. If there are no storm events during the year, then sampling shall occur as soon as possible. If there are no storm events during the fifth year and conditions for administrative extension are met, then sampling shall occur as soon as possible.

[1] The volume of storm water discharge can be estimated by multiplying: amount of rainfall in feet × square feet of surface area × impervious factor. There are 7.5 gallons per cubic foot.

[2] As specified in 40 CFR 136.

[3] *The presence of acute toxicity in the storm water shall be determined as specified in section V of this MRP.*

[4] Influent and effluent samples shall be analyzed for copper according to method 1638 or 1640. The commonly used methods 6010B (Inorganics by ICP-Atomic Emission Spectroscopy) and 200.7 (Trace Elements-ICP) have been found to give inaccurate copper readings in saline-matrix samples due to interference with the sodium-argon complex, which has a molecular weight similar to copper. Method 1638 (ICP/MS) or 1640 (On-Line Chelation) will eliminate the sodium-argon complex before the sample is tested for copper. No inaccurate readings for other metals in a saline-matrix sample is analyzed by methods 6010B or 200.7 are known.

[5] As specified in the Table of Paragraph (b)(1) of 40 CFR 131.38.

4. Storm Water Discharge Monitoring Location Nos. SW-003 through SW-010

a. The Discharger shall visually observe and collect samples of storm water discharges from Discharge Point Nos. SW-003 through SW-010 that represent the quality and quantity of the Facility's storm water discharges from the storm event. Monitoring stations shall be positioned at points where the storm water flow has not commingled with any flow of water from a non-industrial area, and where samples representative of the discharge of storm water runoff associated with industrial activity in the drainage area can be obtained.

   Monitoring locations shall be identified in the BMP Plan Manual, depicted on a site map, and shall not be changed without notice to and the approval of this Regional Water Board. The installation of automatic or mechanical storm water samplers at the monitoring station is recommended.

b. With the exception of high risk areas, Dischargers that determine that the industrial activities and BMPs within two or more drainage areas are substantially identical may either: (1) collect samples from a reduced number of substantially

identical drainage areas, or (2) collect samples from each substantially identical drainage area and analyze a combined sample from each substantially identical drainage area. The Discharger must document such a determination in the annual report.

5. Visual Observation and Sample Collection Exceptions

The Discharger is required to be prepared to collect samples and conduct visual observations at the beginning of the wet season (October 1) and throughout the wet season until the minimum requirements of sections IX.D.2 and IX.D.3. of this MRP are completed with the following exception:

a. The Discharger is not required to collect a sample (in accordance with section IX.D.3) and conduct visual observations (in accordance with section IX.D.2) due to dangerous weather conditions, such as flooding, electrical storm, etc. Non-storm water visual observations are only required during daylight scheduled Facility operating hours. Storm water visual observations are only required during daylight hours. Dischargers that do not collect the required samples or visual observations during a wet season due to this exception shall include an explanation in the Storm Water Annual Report why the sampling or visual observations could not be conducted.

6. Storm Water Annual Report

The Discharger shall submit a Storm Water Annual Report by September 1 of each year to this Regional Water Board. The report shall include the following:

a. summary of visual observations and sampling and analysis results;

b. evaluation of the visual observation and sampling and analysis results;

c. laboratory reports;

d. explanation of why the facility did not implement any activities required by Order No. R9-2008-0049 (if not included in the Evaluation Report); and

e. records specified in section IX.D of this MRP.

The Discharger shall prepare and submit the Storm Water Annual Report using the annual report forms provided by the State Water Board or Regional Water Board or shall submit their information on a form that contains equivalent information.

B. Spill and Illicit Discharge Log

The Discharger shall log and report all spills of significant quantities and all illicit discharges of any quantity within and from the Facility each month, including spills and illicit discharges from vessels that are in the yard for service. The spill/illicit discharge reports shall identify:

1. the time and date of the spill or illicit discharge;
2. the cause of the spill or illicit discharge;
3. the materials or wastes involved in the spill or illicit discharge;
4. the estimated volume of the spill or illicit discharges;
5. the specific location where the spill or illicit discharge originated;
6. the fate of the spill or illicit discharge (e.g., San Diego Bay, floating drydock);
7. the physical extent or size of the area(s) affected by the spill;
8. whether the spill or illicit discharge contained pollutants;
9. the public agencies notified;
10. the corrective actions taken; and
11. the means to prevent or minimize future spills or illicit discharges.

The reports shall be submitted quarterly to the Regional Water Board in accordance with Table E-8 of this MRP.

The Discharger shall include in its annual report (due 60 days following December 31st each year, as specified in table E-8 of this MRP), a summary of the spills and illicit discharges that occurred in or on its leasehold. The spill/illicit discharge summary report shall indicate the total number of spills and illicit discharges for the year, categorize the spills and illicit discharges, and provide the percentages of each type of spill or illicit discharge in a graphical representation. The summary report shall also indicate the efforts the Discharger used in the year to prevent or minimize spills.

C. Chemical Utilization Audit

The Discharger shall submit a complete Chemical Utilization Audit form to summarize the use of hazardous materials and wastes generated. The form shall be submitted annually to the Regional Water Board in accordance with Table E-8 of this MRP.

D. Waste Hauling Log

The Discharger shall submit a log showing the volume, type, disposition, and date of disposal for all wastes originating from the Facility during each month. The log shall be submitted semi-annually to the Regional Water Board in accordance with Table E-8 of this MRP.

E. S ediment Chemistry Monitoring

1. Sediment monitoring, as specified in this MRP, is required.

2. Sample Collection

   a. The sediment sampling program shall consist entirely of surficial sediment samples, and shall be conducted by the Discharger at the stations within its leasehold, as specified in Table E-6 of this MRP.

   b. A minimum of one sample shall be collected and analyzed from each designated station on an annual basis. The samples shall not be discarded after analysis. All samples shall be frozen and retained for a period of not less than 45 days from the date on which the Regional Water Board receives the corresponding analytical results. The Regional Water Board shall notify the Discharger when the samples can be discarded.

   c. If more than one sample is collected from a sampling station, each sample shall be analyzed separately and shall not be composited.

   d. Samples shall be collected in accordance with the current *Sample Collection Plan* that was submitted and approved under the General Shipyard Permit by the Regional Water Board. This Plan addresses all collection protocol including station positioning method, sampling equipment, containers, preservation, transportation, etc.

      Any proposed future changes to the *Sample Collection Plan* shall be submitted to this Regional Water Board for review at least 60 days prior to when the changes are proposed to take effect.

      If the Discharger proposes a new Sample Collection Plan, the following items have to be included in the plan:

      i. Narrative Descriptions: A detailed narrative description of each station location, including distances from permanent key landmarks, shall be developed and confirmed in the field.

      ii. Photographs: Each station shall be marked (if feasible) and photographed. A minimum of two photos shall be taken to show the location of each station relative to the key landmarks that will be used to relocate it (e.g., storm drain outlet, corner of dry dock, etc).

      iii. Station Coordinates: The Discharger shall convert the station coordinates from the Lambert coordinate grid system (i.e., Easting and Northing) into Latitude and Longitude coordinates. All station coordinates shall be confirmed in the field and corrected if necessary.

      iv. Facility and Reference Station Maps: Accurate facility and reference station

maps shall be developed and confirmed in the field. All maps shall be drawn to a scale of 1"=50' or 1"=100' overlain on a Latitude/Longitude coordinate grid system. In addition to the monitoring stations, the maps shall show only pertinent details such as structures, storm drains, and work areas. A mylar master is recommended, photocopies may be submitted.

The final Sample Collection Plan shall remain unchanged from station to station and year to year.

e. If over the course of the monitoring program conditions at a particular station are encountered which render collection of grab samples dangerous or impractical, the Discharger may use in its place another of the approved methods/samplers (e.g., Ekman or diver). If possible, substitutions should be approved in advance by the Regional Water Board.

When substitutions are necessary, the corresponding Discharge Monitoring Reports shall specify the station(s) involved and the substitute method/sampler employed.

3. Sampling Stations and Analysis

a. The guidelines listed in Table E-4 regarding station location/sample collection shall apply, unless otherwise specified in this Monitoring and Reporting Program.

Table E-4. Station Location General Guidelines

Stations Adjacent To:	Sample Collection:
Piers, Floats, Docks, Drydocks, and Quay Walls	Samples shall be taken immediately below the edge of a pier float, dock, dry dock, or quay wall and shall be collected by 0.1 m^2 modified van Veen dredge deployed from a boat or the side of the pier float, dock, dry dock, or quay wall. When a float and quay wall or pier are present side-by-side, samples should be taken below the outside (or bay-side) edge of the float (rather than between the float and quay wall or under the float).
Rip Rap	Samples should be collected 5 feet further from shore than where the rip rap first meets the soft bottom sediment. (In some cases, 10 feet may be specified.)
Storm Drains	Storm drain samples of bay sediment should be collected at a point approximately 10 feet from the mouth of the drain and in line with the centerline of the drain unless otherwise specified in this Monitoring and Reporting Program.
Beach	The narrative descriptions will indicate the distance that a station is located relative to a stationary landmark, such as a pier or other nearby structure.
Dock/Rip Rap Intersection	Follow guidelines for rip rap station.

Stations Adjacent To:	Sample Collection:
Dock/Beach Intersection	Follow guidelines for beach station.

b. The three remote reference stations identified in Table E-7 of this Monitoring and Reporting Program are common to reference stations for other shipyards discharging to San Diego Bay. The Discharger may fulfill its sampling requirements for the remote reference stations by submitting results from samples collected at these stations by other entities during the sampling/reporting period. Reference station locations are specified in Sediment Monitoring Station Locations section of this MRP.

It is the Discharger's responsibility to request and obtain permission from the appropriate party or parties prior to sample collection at each of the three reference stations.

4. Analysis Parameters and Detection Limits

Sample analyses shall be conducted using approved laboratory methods capable of meeting the detection limits shown in Table E-5. Sediment Chemistry Methods and Detection Limits. Surficial sediment samples shall be analyzed for the parameters and to the detection limits indicated in Table E-5.

Table E-5. Sediment Chemistry Methods and Detection Limits

Parameter	Method Number	Detection Limit (dry weight)
Grain size	--	NA
Cadmium, Chromium, Copper, Nickel, Silver[1]	6010	0.5 mg/kg
Mercury[1]	7471	0.1 mg/kg
Arsenic[1]	7060 or 7061	0.5 mg/kg
Lead[1]	7421	0.5 mg/kg
Zinc[1]	6010	2.0 mg/kg
Tributyltin (TBT)[2]	See Footnote 2	1.0 µg/kg
Total Petroleum Hydrocarbons (TPH)[3]	Modified 8015 or DHS	500. µg/kg
Polychlorinated biphenyls/ Polychlorinated terphenyls (PCBs/PCTs)[4]	8080	20.0 µg/kg
PAH[5]	8270	100. µg/kg

[1] Trace metal analysis shall include the individual concentrations of arsenic, cadmium, chromium, copper, lead, mercury, nickel, silver, and zinc. Method 3050 shall be used in preparation for all metal analyses except mercury. Preparation procedures for mercury are included in method 7471.

[2] Concentrations of tributyltin shall be analyzed using protocol approved by the Regional Water Board or as described in:

Stephenson, M.D., and D.R. Smith. 1988. Determination of Tributyltin in Tissues and Sediments by Graphite Furnace Atomic Absorption Spectrometry. Analytical Chemistry, Vol. 60, No. 7. pp 696-698; or

Stallard M.O., and S.Y. Cola. 1989. Optimization of Butyltin Measurements for Seawater, Tissue, and Marine Sediment Samples. Applied Organometallic Chemistry 3:105-114; or

Unger, M.A. et al. 1986. GC Determination of Butyltin in Natural Waters by Flame Photometric Detection of Hexyl Derivatives with Mass Spectrometric Confirmation. Chemosphere, Volume 15, Number 4. p 461.

[3] Using gas chromatography, analyze for the medium molecular weight hydrocarbons, boiling point range nC_{12} - nC_{32}. Separate the two resulting fractions, specifying the concentrations of (1) saturated aliphatic hydrocarbons; (2) unsaturated aromatic hydrocarbons; and (3) their sum, the total petroleum hydrocarbons. The concentrations of the remaining monitored contaminants, PCBs, PCTs, and PAHs, can be determined by further analysis of these two fractions.

TOTAL PETROLEUM HYDROCARBONS

Aliphatic	Aromatic
PCBs/PCTs	PAHs

[4] Analyze the saturated aliphatic fraction for PCBs and PCTs, both of which can be measured in a single procedure. Run the PCB analysis as usual but include one additional standard for Aroclor 5460. At approximately 40 minutes, increase the temperature to 285 degrees celsius. PCTs elute later than PCBs and the entire procedure will take approximately 90 minutes.

Report the concentration of total PCBs, indicating the name and degradation status of the predominant aroclor (e.g., Aroclor 1260, undegraded). The name and status of a secondary PCB aroclor shall also be reported, if present. Similarly, specify the concentration of total PCTs assumed to be Aroclor 5460. Report the presence of any unidentified mixture of chlorinated hydrocarbons detected by electron capture gas chromatography. Additional PCB/PCT information, such as the concentrations of individual congeners, should also be provided if available without additional analytical costs.

[5] The concentrations of the individual PAHs can be determined by further analysis of the unsaturated aromatic fraction. The concentrations of the following eight PAHs shall be reported: phenanthrene, 1-methyl phenanthrene, 2-methyl phenanthrene, benzo(a)pyrene, chrysene, fluoranthene, pyrene, and anthracene.

Additional information, such as the concentration of other PAHs, should also be provided if available without additional analytical costs.

[6] Although not initially required, composited sediment from each sample shall be retained for possible future total organic carbon (TOC) analysis. All samples shall be frozen and retained for a period of no less than 45 days from the date on which Regional Water Board staff received the corresponding analytical results. At that time, the Regional Water Board shall be notified and approval to discard the samples shall be obtained, before the samples are discarded.

5. Sediment Monitoring Results and Reports

a. Discharge Monitoring Reports

The sediment monitoring results shall be submitted to the Regional Water Board in hard copy form and on a compact disc in Microsoft Word 2000 or older format.

The sediment monitoring results shall contain all required sampling results in the following three forms:

i. Tables:

Current, as well as historical, monitoring data shall be provided in tabular form. Historical monitoring data is defined as sample results from all previous reporting periods collected as a part of this MRP. All concentrations shall be reported in both dry and wet weights. Tabular data shall be submitted in hard copy and on a compact disk in Microsoft Excel 2000 or older format.

ii. Graphs:

The specific type of graph(s) to be generated (e.g., histogram) is not specified, but left to the discretion of the Discharger's consultant who should determine the most effective way of presenting the data. Graphical data shall be submitted in hard copy and on a compact disk in Excel 2000 or older format.

iii. Facility and Re ference Station Maps:

The Facility and reference station maps developed for the final Sample Collection Plan and confirmed during the "pre-sampling field effort" shall be used to present the monitoring data. A separate Facility and reference station map shall be developed for each monitored contaminant or contaminant group indicating the measured concentrations at each station (rather than concentration contours).

iv. Paint Chip Analysis;

In addition to tables, graphs, and maps, shipyard Discharge Monitoring Reports must also include the results of the annual paint chip analyses required in Tables E-6 and E-7 of this MRP.

b. Trend Curves and Statistical Analysis

The Discharger shall submit annual "trend curves" for each monitored constituent, in which concentrations are plotted as a function of time. The Discharger shall also determine if a statistically significant change (increase or decrease) in sediment concentrations has occurred over time for each contaminant, relative to reference concentrations.

In making this determination, the Discharger shall employ a statistical method that is best suited for the data available (parametric vs. non-parametric test).

In all cases, the Discharger shall report as soon as possible the cause(s) or suspected cause(s) of any increase in contaminant concentrations, if they are known.

Monitoring results shall be compared against the following three sets of reference data:

i. The Discharger's own historical baseline data (historical data is defined as sample results from all previous sampling/reporting periods collected as a part of the Sediment Monitoring and Reporting Program);

ii. Concentrations measured at the three remote reference sites;

iii. Concen trations measured at nearby city storm drain(s), if present.

6. Sediment Monitoring Station Locations

a. The Discharger shall collect surficial sediment samples in accordance with Table E-6. Sediment Sampling Site Coordinates.

Table E-6. Sediment Sampling Site Coordinates (Lambert/California Coordinates)

Station Number	Easting	Northing	Indicators Only[1]	Full Analysis[2]	Paint Chips
CNM – 01	1723260	193275	X		
CNM – 02	1723395	193435		X	X
CNM – 03	1723480	193465	X		
CNM – 04	1723605	193365		X	X
CNM – 05	1723325	193990	X		
CNM – 06	1723580	193275	X		X
CNM – 07	1723550	193100	X		
CNM – 08	1723690	193160	X		
CNM – 09	1723835	193090	X		
CNM – 010	1723012	193980	X		
CNM - 011	1723245	193545		X	X

1. Indicators Only Analysis
Grain Size
Trace Metals
Tributyltin (TBT)

2. Full Analysis
Grain Size
Trace Metals
Tributyltin (TBT)
Total Petroleum Hydrocarbons (TPH)
Polychlorinated Biphenyls/Terphenyls (PCBs/PCTs)
Polynuclear Aromatic Hydrocarbons (PAHs)

3. Paint Chip Analysis
For each analysis, paint chips shall be extracted from a total of approximately 9 liters of sediment; 3 liters from each of the three sampling sites.

In the laboratory, the sediment shall be sieved using a screen size just large enough to allow the sediment to pass but not the paint chips. Do not exceed a maximum screen size of 16 openings per inch (openings are approximately 1/16th of an inch). The remaining debris shall then be sorted by

hand to remove paint chips. After removal, the paint chips shall be photographed, quantified, and analyzed for metals and TBT.

If paint chips are present, three separate analyses shall be conducted annually. Each analysis will be conducted on paint chips extracted from three stations or replicates; the first analysis will use paint chips extracted from stations CNM-02, CNM-04, and CNM-06. The second analysis shall use paint chips from the three reference stations listed in Table E-7 of this MRP. The third analysis shall be conducted on three replicates taken from storm drain station CNM-011.

b. The Discharger shall collect surficial samples from the three reference stations in accordance with Table E-7. Reference Station Sampling Site Coordinates.

Table E-7. Reference Station Sampling Site Coordinates (Lambert/California Coordinates).

Station Number	Easting	Northing	Indicators Only[1]	Full Analysis[2]	Paint Chips[3]
REF-01	1697300	196600		X	X
REF-02	1706085	204810		X	X
REF-03	1715225	201110		X	X

1. Indicators Only Analysis (see Table E-6 above)
2. Full Analysis (see Table E-6 above)
3. Paint Chip Analysis (see Table E-6 above)

X. REPORTING REQUIR EMENTS

A. General Monitoring and Reporting Requirements

1. The Discharger shall comply with all Standard Provisions (Attachment D) related to monitoring, reporting, and recordkeeping.

B. Self Monitoring Reports (SMRs)

1. At any time during the term of this permit, the State or Regional Water Board may notify the Discharger to electronically submit Self-Monitoring Reports (SMRs) using the State Water Board's California Integrated Water Quality System (CIWQS) Program Web site (http://www.waterboards.ca.gov/ciwqs/index.html). Until such notification is given, the Discharger shall submit hard copy SMRs. The CIWQS Web site will provide additional directions for SMR submittal in the event there will be service interruption for electronic submittal.

2. The Discharger shall report in the SMR the results for all monitoring specified in this MRP under sections III through IX. The Discharger shall submit monthly SMRs including the results of all required monitoring using USEPA-approved test methods or other test methods specified in this Order. If the Discharger monitors any pollutant more frequently than required by this Order, the results of this monitoring shall be included in the calculations and reporting of the data submitted in the SMR.

3. Monitoring periods and reporting for all required monitoring shall be completed according to the following schedule:

Table E-8. Monitoring Periods and Reporting Schedule

Sampling Frequency	Monitoring Period Begins On...	Monitoring Period	SMR Due Date
Continuous	**Permit Effective Date**	**All**	**Submit with monthly SMR**
Daily	**Permit Effective Date**	**(Midnight through 11:59 PM) or any 24-hour period that reasonably represents a calendar day for purposes of sampling.**	**Submit with monthly SMR**
Weekly	**Sunday following permit effective date or on permit effective date if on a Sunday**	**Sunday through Saturday**	**Submit with monthly SMR**
Monthly	**First day of calendar month following permit effective date or on permit effective date if that date is first day of the month**	**1st day of calendar month through last day of calendar month**	**30 days following the end of the monitoring period**
Quarterly	**Closest of January 1, April 1, July 1, or October 1 following (or on) permit effective date**	**January 1 through March 31 April 1 through June 30 July 1 through September 30 October 1 through December 31**	**30 days following the end of the monitoring period**
Semiannually	**Closest of January 1 or July 1 following (or on) permit effective date**	**January 1 through June 30 July 1 through December 31**	**30 days following the end of the monitoring period**
Annually	**Permit Effective Date**	**July 1 through June 30**	**60 days following the end of the monitoring period**
Annual Storm Water Report (IX.D.6 of this MRP)	**First day of calendar month following permit effective date or on permit effective date if that date is first day of the month**	**July 1 through June 30**	**September 1**

4. Reporting Protocols. The Discharger shall report with each sample result the applicable reported Minimum Level (ML) and the current Method Detection Limit (MDL), as determined by the procedure in 40 CFR Part 136.

   The Discharger shall report the results of analytical determinations for the presence of chemical constituents in a sample using the following reporting protocols:

   a. Sample results greater than or equal to the reported ML shall be reported as measured by the laboratory (i.e., the measured chemical concentration in the sample).

b. Sample results less than the RL, but greater than or equal to the laboratory's MDL, shall be reported as "Detected, but Not Quantified," or DNQ. The estimated chemical concentration of the sample shall also be reported.

   For the purposes of data collection, the laboratory shall write the estimated chemical concentration next to DNQ as well as the words "Estimated Concentration" (may be shortened to "Est. Conc."). The laboratory may, if such information is available, include numerical estimates of the data quality for the reported result. Numerical estimates of data quality may be percent accuracy (+ a percentage of the reported value), numerical ranges (low to high), or any other means considered appropriate by the laboratory.

c. Sample results less than the laboratory's MDL shall be reported as "Not Detected," or ND.

d. Dischargers are to instruct laboratories to establish calibration standards so that the ML value (or its equivalent if there is differential treatment of samples relative to calibration standards) is the lowest calibration standard. At no time is the Discharger to use analytical data derived from extrapolation beyond the lowest point of the calibration curve.

5. Compliance Determination. Compliance with effluent limitations for priority pollutants shall be determined using sample reporting protocols defined above and Attachment A of this Order. For purposes of reporting and administrative enforcement by the Regional and State Water Boards, the Discharger shall be deemed out of compliance with effluent limitations if the concentration of the priority pollutant in the monitoring sample is greater than the effluent limitation and greater than or equal to the reporting level (RL).

6. Multiple Sample Data. When determining compliance with an AMEL or MDEL for priority pollutants and more than one sample result is available, the Discharger shall compute the arithmetic mean unless the data set contains one or more reported determinations of "Detected, but Not Quantified" (DNQ) or "Not Detected" (ND). In those cases, the Discharger shall compute the median in place of the arithmetic mean in accordance with the following procedure:

a. The data set shall be ranked from low to high, ranking the reported ND determinations lowest, DNQ determinations next, followed by quantified values (if any). The order of the individual ND or DNQ determinations is unimportant.

b. The median value of the data set shall be determined. If the data set has an odd number of data points, then the median is the middle value. If the data set has an even number of data points, then the median is the average of the two values around the middle unless one or both of the points are ND or DNQ, in which case the median value shall be the lower of the two data points where DNQ is lower than a value and ND is lower than DNQ.

7. The Discharger shall submit SMRs in accordance with the following requirements:

a. The Discharger shall arrange all reported data in a tabular format. The data shall be summarized to clearly illustrate whether the facility is operating in compliance with interim and/or final effluent limitations. The Discharger is not required to duplicate the submittal of data that is entered in a tabular format within CIWQS. When electronic submittal of data is required and CIWQS does not provide for entry into a tabular format within the system, the Discharger shall electronically submit the data in a tabular format as an attachment.

b. The Discharger shall attach a cover letter to the SMR. The information contained in the cover letter shall clearly identify violations of the WDRs; discuss corrective actions taken or planned; and the proposed time schedule for corrective actions. Identified violations must include a description of the requirement that was violated and a description of the violation.

c. SMRs must be submitted to the Regional Water Board, signed and certified as required by the Standard Provisions (Attachment D), to the address listed below:

Regional Water Quality Control Board, San Diego Region
9174 Sky Park Court, Suite 100
San Diego, CA 92123

C. Discharge Monitoring Reports (DMRs)

1. As described in section X.B.1 above, at any time during the term of this permit, the State or Regional Water Board may notify the Discharger to electronically submit SMRs that will satisfy federal requirements for submittal of Discharge Monitoring Reports (DMRs). Until such notification is given, the Discharger shall submit DMRs in accordance with the requirements described below.

2. DMRs must be signed and certified as required by the standard provisions (Attachment D). The Discharger shall submit the original DMR and one copy of the DMR to the address listed below:

STANDARD MAIL	FEDEX/UPS/ OTHER PRIVATE CARRIERS
State Water Resources Control Board Division of Water Quality c/o DMR Processing Center PO Box 100 Sacramento, CA 95812-1000	State Water Resources Control Board Division of Water Quality c/o DMR Processing Center 1001 I Street, 15th Floor Sacramento, CA 95814

All discharge monitoring results must be reported on the official USEPA pre-printed DMR forms (EPA Form 3320-1). Forms that are self-generated will not be accepted unless they follow the exact same format of USEPA Form 3320-1.

D. Other Reports

1. **Progress Reports.** As specified in the compliance time schedules required in Special Provisions VI, progress reports shall be submitted in accordance with the following reporting requirements. At minimum, the progress reports shall include a discussion of the status of final compliance, whether the Discharger is on schedule to meet the final compliance date, and the remaining tasks to meet the final compliance date.

Table E-9. Reporting Requirements for Special Provisions Progress Reports

Special Provision	Reporting Requirements
Attachment G, Provision IX – Annual BMP Site Evaluation	**February 28**

2. **Toxicity Reduction Evaluation.** The Discharger shall report the progress and results of any TRE (and TIE if applicable) required by Special Provision VI.C.2.a of this Order as specified in Special Provisions VI.C.2.a of this Order. The Discharger shall submit reports with the first monthly SMR scheduled to be submitted on or immediately following the report due date.

ATTACHMENT F – FACT SHEET

Table of Contents

I. Permit Information F-3
II. Facility Description F-4
A. Description of Wastewater F-5
B. Discharge Points and Receiving Waters F-8
C. Summary of Existing Requirements and Self-Monitoring Report (SMR) Data F-8
D. Compliance Summary F-13
E. Planned Changes – Not Applicable F-14
III. Applicable Plans, Policies, and Regulations F-14
A. Legal Authorities F-14
B. California Environmental Quality Act (CEQA) F-14
C. State and Federal Regulations, Policies, and Plans F-14
D. Impaired Water Bodies on CWA 303(d) List F-16
E. Other Plans, Polices and Regulations F-17
IV. Rationale For Effluent Limitations and Discharge Specifications F-18
A. Discharge Prohibitions F-18
B. Technology-Based Effluent Limitations F-19
1. Scope and Authority F-19
2. Applicable Technology-Based Effluent Limitations F-20
C. Water Quality-Based Effluent Limitations (WQBELs) F-20
1. Scope and Authority F-20
2. Applicable Beneficial Uses and Water Quality Criteria and Objectives F-21
3. Determining the Need for WQBELs F-21
4. WQBEL Calculations – Not Applicable F-22
5. Whole Effluent Toxicity (WET) F-22
D. Final Effluent Limitations F-25
1. Satisfaction of Anti-Backsliding Requirements F-25
2. Satisfaction of Antidegradation Policy F-25
3. Stringency of Requirements for Individual Pollutants F-26
E. Interim Effluent Limitations – Not Applicable F-26
F. Land Discharge Specifications – Not Applicable F-26
G. Reclamation Specifications – Not Applicable F-26
V. Rationale for Receiving Water Limitations F-26
A. Surface Water F-26
B. Groundwater – Not Applicable F-26
VI. Rationale for Monitoring and Reporting Requirements F-27
A. Influent Monitoring F-27
B. Effluent Monitoring F-27
C. Whole Effluent Toxicity Testing Requirements F-27
D. Receiving Water Monitoring F-27
1. Surface Water F-27
2. Groundwater – Not Applicable F-27
E. Other Monitoring Requirements F-28
VII. Rationale for Provisions F-29

A. Standard Provisions F-29
B. Special Provisions F-29
1. Reopener Provisions F-29
2. Special Studies and Additional Monitoring Requirements F-30
3. Best Management Practices and Pollution Prevention F-30
4. Construction, Operation, and Maintenance Specifications – Not Applicable F-30
5. Special Provisions for Municipal Facilities (POTWs Only) – Not Applicable F-30
6. Other Special Provisions – Not Applicable F-30
7. Compliance Schedules – Not Applicable F-30
VIII. Public Participation F-30
A. Notification of Interested Parties F-31
B. Written Comments F-31
C. Public Hearing F-31
D. Waste Discharge Requirements Petitions F-31
E. Information and Copying F-32
F. Register of Interested Persons F-32
G. Additional Information F-32

List of Tables

Table F-1. Facility Information F-3
Table F-2. Discharge Locations F-8
Table F-3. Numeric Effluent Limitations F-9
Table F-4. Discharge Data Summary for Fire Protection Water F-12
Table F-5. Storm Water Monitoring Data Summary F-12
Table F-6. Basin Plan Beneficial Uses F-15

ATTACHMENT F – FACT SHEET

As described in section II of this Order, this Fact Sheet includes the legal requirements and technical rationale that serve as the basis for the requirements of this Order.

This Order has been prepared under a standardized format to accommodate a broad range of discharge requirements for Dischargers in California. Only those sections or subsections of this Order that are specifically identified as "not applicable" have been determined not to apply to this Discharger. Sections or subsections of this Order not specifically identified as "not applicable" are fully applicable to this Discharger.

I. PERMIT INFORMATION

The following table summarizes administrative information related to the facility.

Table F-1. Facility Information

WDID	
Discharger	**Continental Maritime of San Diego, Inc.**
Name of Facility	**Continental Maritime of San Diego, Inc.**
Facility Address	**1995 Bay Front Street**
	San Diego CA 92113
	San Diego County
Facility Contact, Title and Phone	**Daniel Flood, Vice-President, General Manager, (619) 234-8851**
Authorized Person to Sign and Submit Reports	**Daniel Flood, Vice-President, General Manager, (619) 234-8851**
Mailing Address	**SAME**
Billing Address	**SAME**
Type of Facility	**Shipbuilding and Repair (SIC Code # 3731)**
Major or Minor Facility	**Major**
Threat to Water Quality	**1**
Complexity	**A**
Pretreatment Program	**NA**
Reclamation Requirements	**NA**
Facility Permitted Flow	**NA**
Facility Design Flow	**NA**
Watershed	**San Diego Bay**
Receiving Water	**San Diego Bay**
Receiving Water Type	**Enclosed Bay**

A. Continental Maritime of San Diego, Inc. (CMSD) (hereinafter Discharger) is the operator of Continental Maritime of San Diego, Inc. (hereinafter Facility), a shipyard for the construction, conversion, and repair of U.S. Navy and commercial customers.

For the purposes of this Order, references to the "Discharger" or "permittee" in applicable federal and state laws, regulations, plans, or policy are held to be equivalent to references to the Discharger herein.

B. The Facility discharges wastewater to the San Diego Bay, a water of the United States, and is currently regulated by Order No. R9-2002-0282 which was adopted on November 13, 2002 and expired on November 13, 2007. The terms and conditions of the current Order have been automatically continued and remain in effect until new Waste Discharge Requirements (WDRs) and (NPDES) permit are adopted pursuant to this Order.

C. The Discharger filed a report of waste discharge and submitted an application for renewal of its WDRs and NPDES permit on May 3, 2007. A site visit was conducted on December 5, 2007, to observe operations and collect additional data to develop permit limitations and conditions.

II. FACILITY DESCRIPTION

CMSD is a full service ship repair facility located on 14 acres of land and 17.8 acres of water. The Facility includes 350,625 square feet of office, warehouse and manufacturing building area, 679 parking spaces, and six piers ranging from 175 feet to 700 feet in length. The shipyard provides a variety of services, including: structural repair, sheet metal fabrication, surface preparation (mechanical cleaning and abrasive blasting) and painting, electrical component repair and replacement, machinery overhaul and repair, piping systems, boiler repair, bilge/ballast water treatment, acid flushing, lagging and insulation removal and installation, and the overhaul and rigging of shipboard components. Some industrial processes at the Facility are exposed to storm water. The Facility is covered under the State-wide Industrial Storm Water general permit for the storm water runoff from these industrial processes.

General industrial processes associated with shipbuilding, conversion, repair, and maintenance include: metal fabrication, welding and brazing, abrasive blasting, hydrowashing, fiberglass work, paint and coating application, mechanical work, electrical work, wood work (including sanding), chemical cleaning of piping, line heating, and hazardous waste storage. Several shipbuilding and repair activities take place over water or near shore locations, while others may be performed in workshops or at work site located inland on the shipyard property.

CMSD manages four waste water streams during a ship repair evolution. These waste streams include:

Bilge/Ballast Water – Ships bilge/ballast water contained in holding tanks and machinery spaces upon arrival at CMSD is transferred from vessels to a tank farm via installed piping systems. The final disposition of these liquids can go to:

- A pump station and then to the local Publicly Owned Treatment Works (POTW);
- On-site processing and subsequent discharge to the POTW;
- Manifest to a treatment, storage and disposal facility.

Steam Cleaning Pit Water – CMSD performs various steam cleaning operations on items such as pumps, motors, miscellaneous machinery and piping components in addition to vehicle and rolling stock maintenance. Actual parts cleaning are done over a

containment area. When the steam pit is full, it is pumped to one of the holding tanks and then disposed of in a similar manner as bilge/ballast water.

Shop Cleaning of Non-ferrous Alloys – Solutions of 10 percent hydrochloric acid or 3 percent citric acid and rinse become spent and are manifested by CMSD and picked up by a registered hazardous waste hauler. None of these wastes enter the tank farm, steam pit, or sewer system.

Sanitary Sewer Effluent – Vessel collection, holding, and transfer system effluent is pumped via hoses from the ships to risers located on Pier Nos. 4 and 6. From the risers effluent is piped directly to municipal sewer manholes.

A. Description of Wastewater

The only authorized point source discharges to San Diego Bay from CMSD during the previous permit term were from the fire protection system at Pier Nos. 4 and 6 through Outfall Nos. 001 and 002. Over the term of the previous Order, the Discharger re-designed the fire protection system to recirculate water without discharging water to the San Diego Bay. The elimination of the discharges occurred on February 26, 2004. Thus, the discharge of fire protection system water is not authorized under this renewed permit.

1. Storm Water Runoff

Storm water generated on the site is collected via a storm water diversion system (SWDS), which can capture up to 2.3 inches of rainfall within a 24-hour period in various catchments basins around the facility. This includes the first flush of storm water associated with each storm event. The industrial areas are divided into 11 distinct industrial storm water control areas that are segregated by berms and associated pumping mechanisms to control and divert storm water to a series of above ground tanks for storage. The Industrial User Discharge Permit issued by San Diego Metropolitan Pretreatment Program to the facility, authorized the Facility to release an annual average of 10,420 gallons per day (gpd) of dilute wastewaters (including storm water) in addition to an annual average of 5,125 gpd of industrial wastewater discharges to the sanitary sewer system. Stored storm water is analyzed to determine if it meets the pretreatment discharge limits specified in the Industrial User Discharge Permit and is eventually released into the San Diego Metropolitan Sanitary Sewer System (SDMSSS). No storm water has been discharged to San Diego Bay from the Facility since 2005.

In the event of a major storm that exceeds 2.3 inches in a 24-hour period, CMSD has the capability of releasing excess storm water to San Diego Bay via eight discharge points. Excess storm water that collects in the vicinity of seven designated industrial process areas within the Facility (Areas 1, 2, 3, 5, 7, 8, and 10) is routed to these outfalls during a major storm. Overflow storm water from areas 4, 6, 9, and 11 is not routed directly to outfalls, but allowed to drain into and commingle with stormwater in Area 10, prior to release to Discharge Point No. 005. The storm

water collection areas and location of corresponding Discharge Points are listed in Table F-2 of this Fact Sheet.

Descriptions of the storm water collection areas include:

a. Areas 1 and 2 consist of production piers Nos. 6 and 4, respectively. Pier Nos. 6 and 4 are used for berthing ships which are undergoing repair and maintenance. Industrial activities include metal surface preparation, painting, grinding, welding, and various ship repair activities. Potential sources of pollution include spills during storage and transportation, contaminated storm water run-off and wind conveyance of general trash and grit. Typical wastes include paint debris, paint sludge, grease and oil, solvents, and petroleum wastes.

b. Area 3 is a general storage area for the Facility for the lay down of large equipment and truck parking. Potential sources of pollutants may include general debris, fuel and hydraulic fluids from trucks and loading equipment, and material spills.

c. Area 4 contains the Facility's grit blasting and painting operation. Potential sources of pollutants include paint overspray, storm water runoff, airborne abrasive grit particles, and paint spills. Pollutants of concern include solvents, paint chips containing metals (copper, lead, zinc, etc.), and grease and oil.

d. Area 5 contains the outdoor structural fabrication area, mainly used for steel structure and material storage, although production operations are periodically conducted in this area. The operations include grinding, cutting, and welding. Potential sources of pollution include storm water flows through the industrial area, spills from stationary equipment, and spills from transportation of hazardous materials. Pollutants generated in this area include general trash, metal grinding dust, welding residues, and lubricants.

e. Area 6 is a tank farm area. Large volumes of oily bilge/ballast tank waters from ships, storm water from high-risk areas, and other industrial wastewaters are routed to the tank farm system (eight tanks) for storage, treatment, and ultimate disposal to the sanitary sewer system. Potential pollutants of concern in this area may be contained in water spilled from the storage tanks, including oil and grease.

   The hazardous materials accumulation and storage area at CMSD is located directly adjacent to the tank farm and the main parking lot, in storm water control Area 6. The HazMat area is utilized for central accumulation of wastes such as paints, solvents, acids, and other regulated hazardous substances. The area receives waste from satellite accumulation points throughout the shipyard. Workers in this area consolidate and package the waste for off-site transportation, treatment, and disposal using appropriate manifests. Potential sources of pollutants include spills during transfer and insufficient secondary containment.

The steam cleaning pit is located in storm water containment Area 6. The steam cleaning pit area uses high-pressure steam to degrease and clean the surfaces of pumps, motors, pipes, and various metal parts. When the steam sump fills up to capacity, the wastewater is pumped into a dedicated 15,000 gallon holding tank. The wastewater is subsequently released to the municipal sewer system after it goes through the treatment tank farm and oil/waste separation system. The sludge that accumulates at the bottom of the sump is treated as a hazardous waste and hauled off-site for disposal with an appropriate manifest. Potential sources of pollution from the steam cleaning pit area include overspray that may deposit grime outside of the bermed area and excessive flows may overflow the bermed area. Pollutants generated in this area include oily water, grease, solvents, and various petroleum products.

f. Area 7 is an industrial storage area located adjacent to Area 4 and the grit blasting facilities. Grit blasting materials and equipment are staged in this area. Potential sources of pollutants include paint overspray, storm water runoff, airborne abrasive grit particles, and paint spills. Pollutants of concern include solvents, paint chips containing metals (copper, lead, zinc, etc.), and grease and oil.

g. Area 8 includes the maintenance area where all production support equipment repairs are performed. Repairs include total engine rebuilding, tune-ups, working fluid changes, parts degreasing, painting and a wide assortment of maintenance activities. Potential sources of pollutants include accidental spills, improper labeling or storage, and storm water overflow from the containment system. Pollutants used or stored in the maintenance area include oils, hydraulic fluids, solvents, wastewater, paints, coolants, and fuel.

h. Area 9 consists of production roadways, roof-tops, and the recyclable materials collection area. The recyclable materials collection area at the Facility is where all ferrous and non-ferrous materials are collected for recycling. Overflow from this area directed to in storm water control Area 10. Sources of pollution include storm water contact of materials and wind conveyance of metal fragments and dust. Pollutants generated in this area include aluminum, copper, iron, and tin particles, and cutting oils and grease.

i. Area 10 consists of the materials shipping and receiving area for the Facility. Materials shipped too and from the Facility are loading/unloaded from trucks, staged, and stored for short periods of time in this location. Potential sources of pollutants may include general debris, fuel and hydraulic fluids from trucks and loading equipment, and material spills.

j. Area 11 is a small storage area located behind the Facility's maintenance shop for shop materials and other miscellaneous materials. No chemicals are stored in this area. Potential sources of pollutants include general debris.

k. Discharge Point No. 008 discharges municipal storm water runoff from the Coronado Bridge to the San Diego Bay. Industrial storm water from the facility does not commingle with this discharge.

B. Discharge Points and Receiving Waters

1. The Facility is located near San Diego Bay, as shown in Attachment B (Figure B), a part of this Order.

2. Contact stormwater is discharged into the San Diego Bay as summarized below:

Table F-2. Discharge Locations

Discharge Point	Effluent Description	Discharge Point Latitude	Discharge Point Longitude	Receiving Water
001	Fire Protection System Water	Discharge Locations no longer authorized. Discharge to Bay was eliminated on February 26, 2004.		San Diego Bay
002	Fire Protection System Water			San Diego Bay
003	Area 3 storm water runoff	32° 41' 38" N	117° 8' 52" W	San Diego Bay
004	Area 1 (Pier 6) storm water runoff	32° 41' 38" N	117° 8' 53" W	San Diego Bay
005	Area 10 storm water runoff	32° 41' 41" N	117° 8' 57" W	San Diego Bay
006	Area 1 (Pier 4) storm water runoff	32° 41' 37" N	117° 9' 3" W	San Diego Bay
007	Area 7 storm water runoff	32° 41' 43" N	117° 8' 59" W	San Diego Bay
008	Municipal storm water drain	32° 41' 45" N	117° 8' 50" W	San Diego Bay
009	Area 5 storm water runoff	32° 41' 44" N	117° 8' 52" W	San Diego Bay
010	Area 8 storm water runoff	32° 41' 42" N	117° 8' 53" W	San Diego Bay

C. Summary of Existing Requirements and Self-Monitoring Report (SMR) Data

1. Discharge prohibitions for the authorized discharges contained in Order No. R9-2002-0282 include:

   a. The Discharger shall comply with all requirements of the Basin Plan Waste Discharge Prohibitions included in the Order.

   b. The discharge of sewage, except as noted in the Basin Plan Waste Discharge Prohibitions, to San Diego Bay is prohibited.

c. The discharge of industrial process water (other than cooling water) [as defined in Finding 3 of Order No. R9-2002-0282], is prohibited.

d. The discharge of the first flush of storm water runoff from high risk areas is prohibited, except if the pollutants in the discharge were reduced to the extent that compliance with the requirements of Discharge Specification [B.4 of Order No. R9-2003-0282 (acute toxicity limit summarized in Table F-3 of this Fact Sheet)] is achieved.

e. The discharge of municipal and industrial waste sludge and untreated sludge digester supernatant, centrate, or filtrate to San Diego Bay is prohibited.

f. The discharge of rubbish, refuse, debris, materials of petroleum origin, waste zinc plates, abrasives, primer, paint, paint chips, solvents, and marine fouling organisms, and the deposition of such wastes at any place where they could eventually be discharged is prohibited. This prohibition does not apply to the discharge of marine fouling organisms removed from unpainted, uncoated surfaces by underwater operations and discharges that result from floating booms that were installed for "Force Protection" purposes.

g. The discharge of materials of petroleum origin in sufficient quantities to be visible is prohibited.

h. The discharge or bypassing of untreated waste to San Diego Bay is prohibited. (This prohibition does not apply to non-contact cooling water, miscellaneous low volume water, and fire protection water streams which comply with the requirements of this Order for elevated temperature waste discharges and which do not contain pollutants or waste other than heat.)

i. The discharge of polychlorinated biphenyl compounds, such as those used for transformer fluid, is prohibited.

j. The discharge of wastes and pollutants from underwater operations (such as underwater paint and/or coating removal and underwater hull cleaning (e.g. "scamping")) is prohibited. This prohibition does not apply to the discharge of marine fouling organisms removed from unpainted and uncoated surfaces by underwater operations, or to discharges that result from the cleaning of floating booms that were installed for "Force Protection" purposes.

2. Discharge effluent limitations and specifications for fire protection water were contained in the previous Order. Effluent limitations contained in the previous Order are summarized in Table F-3.

Table F-3. Numeric Effluent Limitations

Parameter	Units	Effluent Limitation
Oil and Grease	mg/L	25

Parameter	Units	Effluent Limitation
Settleable Solids	ml/L	1.0
Turbidity	NTU	75
pH	S.U.	Within limits of 6.0 – 9.0 at all times.
Temperature	°F	[1]
Acute Toxicity	[2]	
Chronic Toxicity	[3]	

[1] Not more than 20°F greater than natural temperature of receiving waters.

[2] Undiluted discharges to the San Diego Bay shall not produce les than 90% survival, 50% of the time, and not less than 70% survival, 10% of the time, except where the percent survival in San Diego Bay Water at the intake location is less than these levels. Where the percent survival in undiluted discharges to San Diego Bay which consist of water taken from San Diego Bay shall not be less than the percent survival in San Diego Bay water at the intake location. In the absence of test results demonstrating otherwise, it will be assumed that the percent survival in San Diego Bay water at the intake location is not less than these levels.

[3] Undiluted discharges to San Diego Bay which consist of water taken from San Diego Bay shall not exceed 1 Toxicity Unit Chronic (TUc), except where the chronic toxicity of San Diego Bay water at the intake location exceeds 1 TUc. Where the chronic toxicity of San Diego Bay water at the intake location exceeds 1 TUc, the chronic toxicity of undiluted discharges to San Diego Bay which consists of water taken from San Diego Bay shall not exceed the chronic toxicity of San Diego Bay water at the intake location. In the absence of test results demonstrating otherwise, it will be assumed that the chronic toxicity in San Diego Bay water at the intake location does not exceed 1 TUc.

3. The following acute toxicity limitation was established in Order No. R9-2002-0282 for undiluted storm water discharges to San Diego Bay, that are associated with industrial activity:

   a. **Acute toxicity:** In a 96-hour static or continuous flow bioassay test, the discharge shall not produce less than 90% survival, 50% of the time, and not less than 70% survival, 10% of the time, using a standard test species and protocol approved by the Regional Water Board.

4. All discharges regulated under Order No. R9-2002-0282 were prohibited from containing a hazardous substance equal to or in excess of a reportable quantity listed in Title 40 of the Code of Federal Regulations (40 CFR), Part 117 and/or 40 CFR 302.

5. In addition to numeric effluent limitations, the Discharger was required to reduce or prevent the discharge of pollutants through the implementation of Best Available Technology economically achievable (BAT) for toxic, non-conventional, pollutants and Best Conventional Pollution Control Technology (BCT) for conventional pollutants through the development and implementation of a best management practices (BMP) Plan.

6. All discharges were required to be discharged in a manner so as to achieve the most rapid initial dilution practicable to minimize concentrations of substances not removed by source control or treatment.

7. Waste management systems (e.g., wastewater treatment systems and waste storage facilities) were required to be designed, constructed, operated, and maintained so as to prevent the discharge of pollutants and maintain indigenous marine life and healthy and diverse marine community.

8. Waste discharges were required to be essentially free of:

   a. Material that is floatable or will become floatable upon discharge.

   b. Settleable material or substances that may form sediments which will degrade benthic communities or other aquatic life.

   c. Substances which will accumulate to toxic levels in marine waters, sediments, or biota.

   d. Materials that result in aesthetically undesirable discoloration of receiving waters.

   e. Substances that significantly decrease the natural light to benthic communities and other marine life.

9. A summary of the available monthly monitoring data for fire protection water from the previous permit term are summarized below:

Table F-4. Discharge Data Summary for Fire Protection Water

Parameters	Units	Highest Reported Monitoring Results	
		Pier 4	Pier 6
Flow	gpm	150	150
Oil and Grease	mg/L	1.12	1.12
Settleable Solids	ml/L	<0.1	<0.1
Turbidity	NTU	27	6.2
pH	s.u.	7.8 - 7.95	7.84 - 8.04
Temperature	°F	78.8	80.6
Total Suspended Solids	mg/L	9	13
Arsenic	mg/L	0.02[1]	0.0246[1]
Cadmium	mg/L	<10.0	<10.0
Chromium	mg/L	<10.0	<10.0
Copper	mg/L	63.3	25.1
Lead	mg/L	0.0106[1]	101
Mercury	mg/L	<0.500	<0.500
Nickel	mg/L	18.5	0.0173[1]
Silver	mg/L	<10.0	<10.0
Zinc	mg/L	537	284
Tributyltin	µg/L	22.4	9.8
Dibutyltin	µg/L	<1	<1
Monobytyltin	µg/L	<1	<1
Acute Toxicity	% survival	12.5	87.5
	TU_a	0.77	0.49
Chronic Toxicity	% survival	7.5	85
	TU_c	>1.0	1.0
PAH	µg/L	1.0	1.0
Chlorine	mg/L	<0.1	<0.1

[1] Values of <10.0 also reported.

10. A summary of the available storm water monitoring data from the previous permit term are summarized below:

Table F-5. Storm Water Monitoring Data Summary

Parameter	Units	Highest Reported Storm Water Value[1]
Flow	gallons	34,176.20
Oil and Grease	mg/L	2.1
Settleable Solids	ml/L	<0.10

Parameter	Units	Highest Reported Storm Water Value[1]
pH	s.u.	6.62 – 6.99
Total Suspended Solids	mg/L	64
Arsenic	µg/L	9.61
Cadmium	µg/L	<1.0
Chromium	µg/L	2.16
Copper	µg/L	59.8
Lead	µg/L	6.11
Mercury	µg/L	<0.500
Nickel	µg/L	59.8
Silver	µg/L	<1.00
Zinc	µg/L	81.5
Tributyltin	µg/L	<3.0
Acute Toxicity	% survival	95
Total Petroleum Hydrocarbons (diesel)	µg/L	2,200
Total Petroleum Hydrocarbons (gas)	µg/L	<100
Chemical Oxygen Demand	mg/L	200
Total Organic Carbon	mg/L	26
Specific Conductance	µmhos/cm	610

[1] Only two storm water discharge events were reported during the previous permit term. The two storm water discharge events occurred at Discharge Point No. 005 on October 27, 2004 and April 28, 2005.

D. Compliance Summary

The Discharger exceeded the chronic toxicity limitation of 1 TU_c on three separate monitoring events between 2002 through 2004 for fire protection water (>1.0 TU_c for each sample). The discharge of fire protection water into the San Diego Bay has been eliminated by the Discharger.

On December 5, 2007, the Facility was inspected by a USEPA contractor to determine compliance with Order No. R9-2002-0282. Major findings reported from that inspection include:

1. "Regional Water Board Order No. R9-2002-0282, Provision E.3. requires the Discharger submit a copy of each amendment to the BMP Plan to the Regional Water Board no later than the implementation date of the amendment. During the review of records, it was apparent that changes were made to the BMP Plan but verification that the Regional Water Board had been notified of the change was not presented."

E. Planned Change s – Not Applicable

III. APPLICABLE PLANS, POLICIES, AND REGULATIONS

The requirements contained in the proposed Order are based on the requirements and authorities described in this section.

A. Legal Authorities

This Order is issued pursuant to section 402 of the federal Clean Water Act (CWA) and implementing regulations adopted by the USEPA and chapter 5.5, division 7 of the California Water Code (commencing with section 13370). It shall serve as a NPDES permit for point source discharges from this facility to surface waters. This Order also serves as WDRs pursuant to article 4, chapter 4, division 7 of the Water Code (commencing with section 13260).

B. California Environmental Quality Act (CEQA)

Under California Water Code section 13389, this action to adopt an NPDES permit is exempt from the provisions of CEQA, Public Resources Code sections 21100 through 21177.

C. State and Federal Regulations, Policies, and Plans

1. **Water Quality Control Plans.** The Regional Water Quality Control Board (Regional Water Board) adopted a Water Quality Control Plan for the San Diego Basin (hereinafter Basin Plan) on September 8, 1994, and last amended on April 25, 2007. The Basin Plan was subsequently approved by the State Water Resources Control Board (State Water Board) on December 13, 1994. Subsequent revisions to the Basin Plan have also been adopted by the Regional Water Board and approved by the State Water Board. The Basin Plan designates beneficial uses, establishes water quality objectives, and contains implementation programs and policies to achieve those objectives for all waters addressed through the plan. In addition, the Basin Plan implements State Water Board Resolution No. 88-63, which established State policy that all waters, with certain exceptions, should be considered suitable or potentially suitable for municipal or domestic supply. Requirements of this Order implement the Basin Plan. Beneficial uses applicable to San Diego Bay are as follows:

Table F-6. Basin Plan Beneficial Uses

Discharge Point No.	Receiving Water Name	Beneficial Use(s)
003 through 010	San Diego Bay	Existing: Industrial service supply (IND); navigation (NAV); contact water recreation (REC1); non-contact water recreation (REC2); commercial and sport fishing (COMM); preservation of biological habitats of special significance (BIOL); estuarine habitat (EST); wildlife habitat (WILD); preservation of rare, threatened or endangered species (RARE); marine habitat (MAR); migration of aquatic organisms (MIGR); shellfish harvesting (SHELL)

Requirements of this Order implement the Basin Plan.

2. **Thermal Plan.** The State Water Board adopted a Water Quality Control Plan for Control of Temperature in the Coastal and Interstate Water and Enclosed Bays and Estuaries of California (Thermal Plan) on May 18, 1972, and amended this plan on September, 18 1975. This plan contains temperature objectives for surface waters. Requirements of this Order implement the Thermal Plan.

3. **National Toxics Rule (NTR) and California Toxics Rule (CTR).** USEPA adopted the NTR on December 22, 1992, and later amended it on May 4, 1995 and November 9, 1999. About 40 criteria in the NTR applied in California. On May 18, 2000, USEPA adopted the CTR. The CTR promulgated new toxics criteria for California and, in addition, incorporated the previously adopted NTR criteria that were applicable in the state. The CTR was amended on February 13, 2001. These rules contain water quality criteria for priority pollutants.

4. **State Implementation Policy.** On March 2, 2000, the State Water Board adopted the *Policy for Implementation of Toxics Standards for Inland Surface Waters, Enclosed Bays, and Estuaries of California* (State Implementation Policy or SIP). The SIP became effective on April 28, 2000 with respect to the priority pollutant criteria promulgated for California by the USEPA through the NTR and to the priority pollutant objectives established by the Regional Water Board in the Basin Plan. The SIP became effective on May 18, 2000 with respect to the priority pollutant criteria promulgated by the USEPA through the CTR. The State Water Board adopted amendments to the SIP on February 24, 2005 that became effective on July 13, 2005. The SIP establishes implementation provisions for priority pollutant criteria and objectives and provisions for chronic toxicity control. Requirements of this Order implement the SIP.

5. **Alaska Rule.** On March 30, 2000, USEPA revised its regulation that specifies when new and revised state and tribal water quality standards (WQS) become effective for CWA purposes (40 CFR § 131.21, 65 Fed. Reg. 24641 (April 27, 2000)). Under the revised regulation (also known as the Alaska rule), new and revised standards submitted to USEPA after May 30, 2000, must be approved by USEPA before being used for CWA purposes. The final rule also provides that standards already in effect

and submitted to USEPA by May 30, 2000, may be used for CWA purposes, whether or not approved by USEPA.

6. **Antidegradation Policy.** Section 131.12 requires that the state water quality standards include an antidegradation policy consistent with the federal policy. The State Water Board established California's antidegradation policy in State Water Board Resolution No. 68-16. Resolution No. 68-16 incorporates the federal antidegradation policy where the federal policy applies under federal law. Resolution No. 68-16 requires that existing water quality be maintained unless degradation is justified based on specific findings. The Regional Water Board's Basin Plan implements, and incorporates by reference, both the State and federal antidegradation policies. The permitted discharge must be consistent with the antidegradation provision of section 131.12 and State Water Board Resolution No. 68-16.

7. **Anti-Backsliding Requirements.** Sections 402(o)(2) and 303(d)(4) of the CWA and federal regulations at title 40, Code of Federal Regulations[1] section 122.44(l) prohibit backsliding in NPDES permits. These anti-backsliding provisions require that effluent limitations in a reissued permit must be as stringent as those in the previous permit, with some exceptions in which limitations may be relaxed.

D. Impaired Water Bodies on CWA 303(d) List

Under section 303(d) of the 1972 Clean Water Act, states, territories and authorized tribes are required to develop lists of water quality limited segments. The waters on these lists do not meet water quality standards, even after point sources of pollution have installed the minimum required levels of pollution control technology. On November 30, 2006 USEPA gave final approval to California's 2006 section 303(d) List of Water Quality Limited Segments. The San Diego Bay, as a whole, is listed as impaired for polychlorinated biphenyls (PCBs). Additional portions of the San Diego Bay are listed as impaired for additional parameters. Portions of the San Diego Bay applicable to the Facility include, "San Diego Bay Shoreline, near Coronado Bridge", "San Diego Bay Shoreline, between Sampson and 28th Streets", and "San Diego Bay Shoreline, near Chollas Creek". These portions of the San Diego Bay are listed in the 303(d) list as impaired for: benthic community effects, copper, mercury, polycyclic aromatic hydrocarbons (PAHs), PCBs, sediment toxicity, and zinc.

An applicable Total Maximum Daily Load (TMDL) has not yet been adopted by the Regional Water Board and approved by USEPA. A TMDL for sediment toxicity is currently being developed for the "San Diego Bay Shoreline, near Chollas Creek". In the event that this TMDL is finalized during the term of this Order, the Regional Water Board reserves the right to reopen and revise this Order as necessary to comply with the applicable TMDL.

[1] All further statutory references are to title 40 of the Code of Federal Regulations unless otherwise indicated.

E. Other Plan s, Polices and Regulations

1. Bays and Estuaries Policy. The State Water Board adopted a Water Quality Control Policy for Enclosed Bays and Estuaries of California (Bays and Estuaries Policy) on May 16, 1974 (last amended in 1995). The Bays and Estuary Policy establishes principles for management of water quality, quality requirements for waste discharges, discharge prohibitions, and general provisions to prevent water quality degradation and to protect the beneficial uses of waters of enclosed bays and estuaries. These principles, requirements, prohibitions and provisions have been incorporated into this Order.

   a. The Bays and Estuaries Policy contains the following principles for management of water quality in enclosed bays and estuaries, which includes the San Diego Bay:

      1) The discharge of municipal wastewaters and industrial process waters (exclusive of cooling water discharges) to enclosed bays and estuaries shall be phased out at the earliest practicable date. Exceptions to this provision may be granted by a Regional Water Board only when the Regional Water Board finds that the wastewater in question would consistently be treated and discharged in such a manner that it would enhance the quality of receiving waters above that which would occur in the absence of the discharge. For the purpose of this policy, treated ballast waters and innocuous non-municipal wastewater such as clear brines, washwater, and pool drains are not necessarily considered industrial process wastes, and may be allowed by Regional Water Boards under discharge requirements that provide protection to the beneficial uses of the receiving water.

      2) The Bays and Estuaries Policy also prohibits the discharge or by-passing of untreated wastes. This Order prohibits the discharge and by-passing of untreated waste except for non-contact fire protection system water, hydrostatic relief water, and flood water. For the purpose of the Bays and Estuaries Policy and this Order No. R9-2008-0049, the discharges of fire protection water; hydrostatic relief water, floating drydock deballasting; floodwater dewatering; hydrostatic test water; and the waste discharges conditionally regulated (saltbox water; steam condensate; compressor and condenser non-contact cooling water; shipbuilding ways gate and wall leakage; graving dock sump water; and graving dock sump pump test water) will be considered innocuous non-municipal wastewaters and, as such, will not be considered industrial process wastes.

   b. The following Principles for the Management of Water Quality in Enclosed Bays and Estuaries, as stated in the Bays and Estuaries Policy, apply to all of California's enclosed bays and estuaries including San Diego Bay:

      1) Persistent or cumulative toxic substances shall be removed from the waste to the maximum extent practicable through source control or adequate treatment prior to discharge.

2) Bay or estuarine outfall and diffuser systems shall be designed to achieve the most rapid initial dilution practicable to minimize concentrations of substances not removed by source control or treatment.

3) Wastes shall not be discharged into or adjacent to areas where the protection of beneficial uses requires spatial separation from waste fields.

4) Waste discharges shall not cause a blockage of zones of passage required for the migration of anadromous fish.

5) Non-point sources of pollutants shall be controlled to the maximum practicable extent.

This Regional Water Board has considered the Principles for the Management of Water Quality in Enclosed Bays and Estuaries, in adopting this Order. The terms and conditions of this Order are consistent with the Principles for the Management of Water Quality in Enclosed Bays and Estuaries.

IV. RATIONALE FOR EFFLUENT LIMITATIONS AND DISCHARGE SPECIFICATIONS

The CWA requires point source dischargers to control the amount of conventional, non-conventional, and toxic pollutants that are discharged into the waters of the United States. The control of pollutants discharged is established through effluent limitations and other requirements in NPDES permits. There are two principal bases for effluent limitations in the Code of Federal Regulations: section 122.44(a) requires that permits include applicable technology-based limitations and standards; and section 122.44(d) requires that permits include water quality-based effluent limitations (WQBELs) to attain and maintain applicable numeric and narrative water quality criteria to protect the beneficial uses of the receiving water.

A. Discharge Prohibitions

1. California Water Code section 13243 provides that the Regional Water Board, in a water quality control plan, may specify certain conditions where the discharge of wastes or certain types of wastes that could affect the quality of waters of the state is prohibited. The Basin Plan prohibitions are incorporated by reference in the Order. Prohibition III.A and III.B are carried over from the previous Order and require the Discharger to comply with the Basin Plan prohibitions.

2. Discharge Prohibitions III.E, III.F, and III.G are based on the requirements of the Enclosed Bays and Estuaries Policy and are carried over from the previous Order. Discharge Prohibitions III.C and III.H are based on the requirements of the Enclosed Bays and Estuaries Policy and have been carried over from the previous Order with revisions that reflect changes in the facility operations (discontinuing industrial wastewater discharges).

3. Discharge Prohibition III.D is based on the toxicity requirements contained in the Basin Plan.

4. Discharge Prohibition III.I, which prohibits the discharge of PCBs, is carried over from the previous Order based on the 303(d) listing for these compounds for San Diego Bay.

5. Discharge Prohibition III.J prohibits the discharge of waste and pollutants from underwater operations, and has been carried over from the previous Order.

B. Technology-Based Effluent Limitations

1. Scope and Authority

Section 301(b) of the CWA and implementing USEPA permit regulations at section 122.44, title 40 of the Code of Federal Regulations, require that permits include conditions meeting applicable technology-based requirements at a minimum, and any more stringent effluent limitations necessary to meet applicable water quality standards. The discharges authorized by this Order must meet minimum federal technology-based requirements based on Best Professional Judgment (BPJ) in accordance with 40 CFR section 125.3.

The CWA requires that technology-based effluent limitations be established based on several levels of controls:

a. Best practicable treatment control technology (BPT) represents the average of the best performance by plants within an industrial category or subcategory. BPT standards apply to toxic, conventional, and non-conventional pollutants.

b. Best available technology economically achievable (BAT) represents the best existing performance of treatment technologies that are economically achievable within an industrial point source category. BAT standards apply to toxic and non-conventional pollutants.

c. Best conventional pollutant control technology (BCT) represents the control from existing industrial point sources of conventional pollutants including BOD, TSS, fecal coliform, pH, and oil and grease. The BCT standard is established after considering the "cost reasonableness" of the relationship between the cost of attaining a reduction in effluent discharge and the benefits that would result, and also the cost effectiveness of additional industrial treatment beyond BPT.

d. New source performance standards (NSPS) represent the best available demonstrated control technology standards. The intent of NSPS guidelines is to set limitations that represent state-of-the-art treatment technology for new sources.

The CWA requires USEPA to develop effluent limitations, guidelines and standards (ELGs) representing application of BPT, BAT, BCT, and NSPS. Section 402(a)(1) of the CWA and section 125.3 of the Code of Federal Regulations authorize the use of

best professional judgment (BPJ) to derive technology-based effluent limitations on a case-by-case basis where ELGs are not available for certain industrial categories and/or pollutants of concern. Where BPJ is used, the permit writer must consider specific factors outlined in section 125.3.

2. Applicable Technology-Based Effluent Limitations

a. Numeric technology-based effluent limitations are not applicable to the discharge of industrial storm water from shipyards. However, a NPDES permit is required for industrial type storm water discharges pursuant to 40 CFR 122.26. Storm water pollution prevention plans (SWPPP) and BMPs are typically applied to control the discharge of pollutants to receiving waters. The previous Order, in accordance with 40 CFR 122.44(k), determined that the implementation of BMPs for the discharge of industrial storm water discharges associated with ship construction, repair and maintenance activities are appropriate. To carry out the purpose and intent of the CWA, the previous Order required the Discharger to develop and implement a BMP plan, as authorized by CWA section 304(e) and section 402(p), for toxic pollutants and hazardous substances, and for the control of storm water discharges. The requirements of the BMPs contained in Order No. R9-2002-0282 are similar to those of a SWPPP.

The requirement to implement an appropriate BMP plan to address the discharge of contact storm water is carried over from Order No. R9-2002-0282.

C. Water Quality-Based Effluent Limitations (WQBELs)

1. Scope and Authority

Section 301(b) of the CWA and section 122.44(d) require that permits include limitations more stringent than applicable federal technology-based requirements where necessary to achieve applicable water quality standards.

Section 122.44(d)(1)(i) mandates that permits include effluent limitations for all pollutants that are or may be discharged at levels that have the reasonable potential to cause or contribute to an exceedance of a water quality standard, including numeric and narrative objectives within a standard. Where reasonable potential has been established for a pollutant, but there is no numeric criterion or objective for the pollutant, WQBELs must be established using: (1) USEPA criteria guidance under CWA section 304(a), supplemented where necessary by other relevant information; (2) an indicator parameter for the pollutant of concern; or (3) a calculated numeric water quality criterion, such as a proposed state criterion or policy interpreting the state's narrative criterion, supplemented with other relevant information, as provided in section 122.44(d)(1)(vi).

The process for determining reasonable potential and calculating WQBELs when necessary is intended to protect the designated uses of the receiving water as specified in the Basin Plan, and achieve applicable water quality objectives and

criteria that are contained in other state plans and policies, or any applicable water quality criteria contained in the CTR and NTR.

2. Applicable Beneficial Uses and Water Quality Criteria and Objectives

The Basin Plan designates beneficial uses, establishes water quality objectives, and contains implementation programs and policies to achieve those objectives for all waters addressed through the Basin Plan. The beneficial uses applicable to the San Diego Bay are summarized in section III.C.1 of this Fact Sheet. The Basin Plan includes both narrative and numeric water quality objectives applicable to the receiving water.

The CTR promulgated new toxics criteria for California and, in addition, incorporated the previously adopted National Toxics Rule criteria that were applicable in the State. Priority pollutant water quality criteria in the CTR are applicable to San Diego Bay. The CTR contains both saltwater and freshwater criteria. Because a distinct separation generally does not exist between freshwater and saltwater aquatic communities, the following apply: In accordance with section 131.38(c)(3), freshwater criteria apply to areas where salinities are at or below at salinities of 1 part per thousand (ppt) and below at locations where this occurs 95 percent or more of the time. The Regional Water Board determined that because the discharge is within a bay, saltwater CTR criteria are applicable. The CTR criteria for saltwater or human health for consumption of organisms, whichever is more stringent, are used to prescribe the effluent limitations in this Order to protect the beneficial uses of the San Diego Bay, a water of the United States in the vicinity of the discharge.

3. Determining the Need for WQBELs

The SIP procedures for the implementation of CTR and NTR criteria are not applicable to storm water discharges. However, the toxicity objectives contained in the Basin Plan and the Bays and Estuary Policy are applicable to the discharge of storm water from the Facility to the San Diego Bay.

The Basin Plan includes the following narrative water quality objective for toxicity:

"All waters shall be maintained free of toxic substances in concentrations that are toxic to, or that produce detrimental physiological responses in human, plant, animal, or aquatic life. Compliance with this objective will be determined by the use of indicator organisms, analyses of species diversity, population density, growth anomalies, bioassays of appropriate duration, or other appropriate methods as specified by the Regional Board.

The survival of aquatic life in surface waters subjected to a waste discharge or other controllable water quality factors, shall not be less than that for the same water body in areas unaffected by the waste discharge or, when necessary, for other control water that is consistent with requirements specified in USEPA, State Water Resources Control Board or other protocol authorized by the Regional Board. As a minimum, compliance with this objective as stated in the previous sentence shall be

evaluated with a 96-hour acute bioassay. In addition, effluent limits based upon acute bioassays of effluents will be prescribed where appropriate, additional numerical receiving water objectives for specific toxicants will be established as sufficient data become available, and source control of toxic substances will be encouraged."

Order No. R9-2002-0282 found that the Facility did appear to have reasonable potential to exceed water quality objectives for toxicity due to storm water data collected during the 1999 to 2000 wet season. Furthermore, the concentrations of copper and zinc in the industrial storm water sampled during the 1999 to 2000 wet season ranged from 136 to 1,050 µg/l and 288 to 1,640 µg/L, respectively. These concentrations of copper and zinc are significantly greater than the USEPA Benchmark Values (63.3 µg/L for copper and 117 µg/L for zinc) for industrial storm water and are unlikely to result in a 90 percent standard species survival rate for acute toxicity. Due to the installation of the storm water diversion system, the Facility has only had two storm water discharge events over the course of Order No. R9-2002-0282 (October 27, 2004 and April 28, 2005). These discharge events indicate a significant reduction in the concentrations of copper and zinc in the discharge of storm water, with the highest values for the two events being 59.8 µg/L for copper and 81.5 µg/L for zinc. Acute toxicity monitoring was only conducted for the October 27, 2004 storm water discharge event, and resulted in 95 percent survival. Although the most recent data indicates that the Discharger continues to implement effective BMPs, and pollutants appear to be below USEPA Benchmark Values, not enough data is available to conclude that reasonable potential to exceed water quality criteria/objectives has been eliminated. Due to the lack of monitoring data, the types of industrial activities conducted on-site, the scale of these industrial activities, and the previous indication that reasonable potential for the Facility to exceed the WQBELs for toxicity exists, reasonable potential exists to exceed water quality objectives for acute toxicity.

The applicable toxicity limitations are discussed in section IV.C.5 of this Fact Sheet.

4. WQBEL Calculations – Not Applicable

5. Whole Effluent Toxicity (WET)

For compliance with the Basin Plan's narrative toxicity objective, this Order requires the Discharger to conduct whole effluent toxicity testing for acute toxicity, as specified in the Monitoring and Reporting Program (Attachment E section V.). This Order also contains effluent limitations for acute toxicity and requires the Discharger to implement best management practices to investigate the causes of, and identify corrective actions to reduce or eliminate effluent toxicity.

The acute toxicity effluent limitation established in Order No. R9-2002-0282 was established to implement the Basin Plan water quality objective for toxicity in receiving waters and was derived from, and is essentially the same as, the acute toxicity discharge standard contained in the 1974 State Water Board Water Quality Control Policy for the Enclosed Bays and Estuaries of California (EBP) which applies

to discharges exempted from the EBP acute toxicity discharge standard prohibition of discharges of wastewaters and process waters. The EBP acute toxicity discharge standard applied directly to wastes being discharged, similar to USEPA'a technology-based effluent limitations, and was intended to be a minimum standard to prevent water quality degradation and protect beneficial uses of enclosed bays and estuaries.

During the renewal of The United States Navy NPDES permits for three Navy facilities located in the San Diego region, the Navy challenged the acute toxicity limitation and has asserted that the acute toxicity limitation is not based on scientific data, that it is overly stringent for protecting water quality, and that diversion of all storm water runoff to the sanitary sewer is the only effective BAT/BCT for meeting the effluent limitation.

Due to the nature of stormwater runoff associated with industrial activity and in the absence of a numeric toxicity water quality objective for San Diego Bay from which numeric toxicity effluent limitations can be derived, the Regional Water Board maintains that use of the EBP acute toxicity minimum discharge requirement is an appropriate approach to implement the Basin Plan narrative water quality objective for toxicity in receiving waters. Nonetheless, the Navy NPDES permits contained provisions which allowed the Navy to recommend, after conducting a required study, alternative scientifically valid survival rates for acute exposure to discharges of storm water from industrial areas at Navy facilities.

The Navy was tasked with a study to develop a scientifically defensible, and appropriate, toxicity limitation for industrial storm water discharges from Naval facilities to San Diego Bay. The results of the study were summarized in a Final Report, *Storm Water Toxicity Evaluation Conducted at: Naval Station San Diego, Naval Submarine Base San Diego, Naval Amphibious Base Coronado, and Naval Air Station North Island*, dated May 2006.

The Navy's final recommendations included in the report are summarized below:

- The use of appropriate USEPA WET test methods and data evaluation when declaring a test result as toxic.
- Acknowledge of WET method variable and the minimum significant difference that laboratory testing can provide in declaring a toxic result.
- Consideration of realistic exposure conditions when using WET testing to infer toxicity in the receiving water.

In addition, the Navy has submitted comments regarding the current acute toxicity requirements. Comments of significant importance are summarized below:

- The Navy has requested that the existing storm water toxicity testing language be revised to require a statistical comparison of discharge toxicity results with control sample toxicity results using a student t-test, to determine whether a discharge is toxic or not.

- The Navy has requested that the existing storm water toxicity testing language be revised to require the use of percent minimum significant difference, using the 10th and 75th percentiles as lower and upper bounds, respectively, to account for inherent variability of toxicity testing procedures to determine whether a discharge is toxic or not.
- The Navy has requested that the existing storm water toxicity discharge specification language be revised according to two proposed alternatives that presumably consider realistic exposure conditions to infer toxicity in the receiving water.

Regional Water Board staff have previously stated in a memorandum to the Executive Officer dated August 22, 2006 that the Navy's proposed toxicity alternatives not be adopted in their entirety and, "Toxicity in storm water discharges should not be ignored just because the causative agent is diluted in bay water. Testing times should not be shortened to ensure that the variability inherent to storm water discharges is not causing low level toxicity that may be missed in an acute test."

Considering the study performed by the Navy, comments received from the Navy, and the interpretation of State regulations, the implementation of acute limits for storm water shall be based on a calculated statistical difference through the use of a student t-test, in survival between the 100 percent concentration of storm water and the control (receiving water). This method is preferable in that it takes into account the performance of the control, and defines statistical confidence in test results. This approach accounts for inherent variability of toxicity testing procedures to determine whether a discharge is toxic or not with the use of a percent minimum significant difference (PMSD). USEPA's guidance document recommends using the 10th and 90th percentile PMSD for a given test species for comparison with the PMSD of the discharge sample, and because the PMSD should be used in conjunction with the statistical comparison to controls, the use of the 75th percentile PMSD as suggested by the Navy is not supported.

For this Order, the determination of Pass or Fail from a single-effluent-concentration (paired) acute toxicity test is determined using a one-tailed hypothesis test called a t-test. The objective of a Pass or Fail test is to determine if survival in the single treatment (100% effluent) is significantly different from survival in the control (0% effluent). Following Section 11.3 in the fifth edition of Methods for Measuring the Acute Toxicity of Effluents and Receiving Waters to Freshwater and Marine Organisms (EPA/821/R-02/012, 2002), the t statistic for the single-effluent concentration acute toxicity test shall be calculated and compared with the critical t set at the 5% level of significance. If the calculated t does not exceed the critical t, then the mean responses for the single treatment and control are declared "not statistically different" and the Discharger shall report "Pass" on the DMR form. If the calculated t does exceed the critical t, then the mean responses for the single treatment and control are declared "statistically different" and the Discharger shall report "Fail" on the DMR form. This Order requires additional toxicity testing if the effluent limitation for acute toxicity is reported as "Fail" as specified in the Monitoring and Reporting Program.

The use of a difference between a control and a critical concentration (100% in this case) is statistically defendable and protective of the Basin Plan's toxicity objective.

D. Final Effluent Limitations

The final effluent limitation for acute toxicity for storm water is based on the determination of "Pass" or "Fail" from a single-effluent-concentration acute toxicity test using a one-tailed hypothesis test (t-test).

1. Satisfaction of Anti-Backsliding Requirements

The Discharge of fire protection water has been eliminated by the Discharger and is no longer authorized under this Order. Thus, effluent limitations and specifications applicable to only the fire protection water have been removed.

The acute toxicity limitation has been revised based on results of a site-specific study on the toxicity of industrial storm water from Naval Bases into the San Diego Bay and to offer a statistically defendable method to determine compliance with the Basin Plan's toxicity water quality objective. The revised limitation is considered to be at least as stringent as the previous acute toxicity limitation.

All effluent limitations in this Order for the remaining discharge of storm water are at least as stringent as the effluent limitations in the previous Order and meet State and federal anti-backsliding requirements.

2. Satisfaction of Antidegradation Policy

Waste Discharge Requirements for the Discharger must conform with federal and state antidegradation policies provided at 40 CFR 131.12 and in State Board Resolution No. 68-16, Statement of Policy with Respect to Maintaining High Quality of Waters in California. The antidegradation policies require that beneficial uses and the water quality necessary to maintain those beneficial uses in the receiving waters of the discharge shall be maintained and protected, and, if existing water quality is better than the quality required to maintain beneficial uses, the existing water quality shall be maintained and protected unless allowing a lowering of water quality is necessary to accommodate important economic and social development or consistent with maximum benefit to the people of California. When a significant lowering of water quality is allowed by the Regional Water Board, an antidegradation analysis is required in accordance with the State Water Board's Administrative Procedures Update (July 2, 1990), Antidegradation Policy Implementation for NPDES Permitting.

The limitations and requirements of Order No. R9-2008-0049 are as stringent than established in the previous Order for the authorized discharges. The permitted discharge is consistent with the antidegradation provisions of 40 CFR 131.12 and State Water Board Resolution No. 68-16.

Compliance with the new acute effluent limitation will result in the use of best practicable treatment or control of the discharge. The impact on existing water quality will be insignificant.

3. Stringency of Requirements for Individual Pollutants

The implementation of a BMP plan for the discharge of industrial wastes associated with ship construction, repair and maintenance activities are appropriate in accordance with 40 CFR 122.44(k). To carry out the purpose and intent of the CWA, the Discharger is required to develop and implement a BMP plan, as authorized by CWA section 304(e) and section 402(p), for toxic pollutants and hazardous substances, and for the control of storm water discharges.

Numeric technology-based effluent limitations are not applicable to the discharges authorized under this Order and have not been established for discharges authorized under this Order, thus technology based effluent-limitations contained in this Order are not more stringent than required by the CWA.

E. Interim Ef fluent Limitations – Not Applicable

F. Land Discharge Specifications – Not Applicable

G. Reclamation Specifications – Not Applicable

V. R ATIONALE FOR RECEIVING WATER LIMITATIONS

A. Surface Water

Receiving water limitations of Order No. R9-2008-0049 are derived from the water quality objectives for bays and estuaries established by the Basin Plan (1994), the Bays and Estuaries Policy (1974), the California Toxics Rule (2000), and the State Implementation Policy (2005).

B. Groundwater – Not Applicable

VI. RATIONALE FOR MONITORING AND REPORTING REQUIREMENTS

40 CFR section 122.48 requires that all NPDES permits specify requirements for recording and reporting monitoring results. California Water Code sections 13267 and 13383 authorize the Regional Water Board to require technical and monitoring reports. The Monitoring and Reporting Program (MRP), Attachment E of this Order, establishes monitoring and reporting requirements to implement federal and state requirements. The following provides the rationale for the monitoring and reporting requirements contained in the MRP for this Facility.

A. Influent Monitoring

Influent monitoring was established in Order No. R9-2002-0282 for the intake for fire protection water. Because the discharge of fire protection water has been eliminated, influent monitoring is no longer required.

B. Effluent Monitoring

Effluent monitoring was established in Order No. R9-2002-0282 for fire protection water. Because the discharge of fire protection water has been eliminated, effluent monitoring is no longer required.

C. Whole Effluent Toxicity Testing Requirements

This order carries over the requirement from Order No. R9-2002-0282 that the Discharger analyze at least one industrial storm water discharge event annually for acute toxicity.

The testing requirements have been revised to be applicable with the new acute toxicity limitation, based on a t-test, as specified in section V of the MRP.

D. Receiving Water Monitoring

1. Surface Water

Monitoring of the receiving water is necessary to determine if the discharges from the Facility are impacting the San Diego Bay, applicable beneficial uses, and aquatic life.

Annual monitoring of the CTR priority pollutants has been added to determine compliance with receiving water limitations and to help determine background levels in the receiving water for future permitting efforts (i.e., if the Discharger wanted to add an additional industrial discharge in future permits) and provide data to help determine long-term trends in receiving water quality.

2. Groundwater – Not Applicable

E. Other Monitoring Requirements

1. The discharge of industrial storm water to the San Diego Bay may contain pollutants from the surrounding area which could contribute to the exceedance of the water quality criteria/objectives of the receiving water. Storm water monitoring requirements have been carried over from Order No. R9-2002-0282 to determine the effects of storm water discharges on the receiving water, determine compliance with the applicable toxicity limitations, and monitor the effectiveness of the BMP Plan.

2. Monitoring requirements for spill and illicit discharges, chemical utilization, and waste hauling have been carried over from MRP R9-2002-0282. These operational monitoring requirements have been carried over from Order No. R9-2002-0282 to help determine the effectiveness of the BMP Plan and ensure that appropriate BMPs are properly implemented.

3. The General Shipyard Permit (Order No. 97-37 NPDES No. CAG039002) established a sediment monitoring program for the shipyards that required the facilities to collect annual surficial sediment samples. The sediment monitoring program also required sampling at three background reference stations in San Diego Bay. The monitoring included sediment sampling for grain size, trace metals including cadmium, chromium, copper, nickel, silver, mercury, arsenic, lead, zinc, tributyltin (TBT), total petroleum hydrocarbons (TPH), PCBs / polychlorinated terphenyls (PCTs), and polynuclear aromatic hydrocarbons (PAHs), and an analysis of paint chips entrained in the sediment. The purpose of the sampling was to monitor the levels of sediment contamination and to use the information for any future cleanups and implementation of waste load allocations for the TMDL program.

4. The Regional Harbor Monitoring Program is being developed to obtain critical ambient water quality data from the four harbors in the San Diego Region. The intent of regional monitoring activities is to maximize the efforts of all monitoring partners using a more cost-effective monitoring design and to best utilize the pooled scientific resources of the region. During these coordinated sampling efforts, the discharger's sampling and analytical effort may be reallocated to provide a regional assessment of the impact of the discharge of waste and storm water to the four harbors in the San Diego Region. Anticipated modifications to the monitoring program will be coordinated so as to provide a more comprehensive picture of the ecological and statistical significance of monitoring results and to determine cumulative impacts of various pollution sources. If predictable relationships among the biological, water quality and effluent monitoring variables can be demonstrated, it may be appropriate to decrease the discharger's sampling effort. Conversely, the monitoring program may be intensified if it appears that the objectives cannot be achieved through the discharger's existing monitoring program. These changes will improve the overall effectiveness of monitoring in the four harbors in the San Diego Region.

VII. RATIONALE FOR PROVISIONS

A. Standard Provisions

Standard Provisions, which apply to all NPDES permits in accordance with 40 CFR section 122.41, and additional conditions applicable to specified categories of permits in accordance with 40 CFR section 122.42, are provided in Attachment D. The Discharger must comply with all standard provisions and with those additional conditions that are applicable under 40 CFR section 122.42.

40 CFR section 122.41(a)(1) and (b) through (n) establish conditions that apply to all state-issued NPDES permits. These conditions must be incorporated into the permits either expressly or by reference. If incorporated by reference, a specific citation to the regulations must be included in the Order. Section 123.25(a)(12) allows the state to omit or modify conditions to impose more stringent requirements. In accordance with section 123.25, this Order omits federal conditions that address enforcement authority specified in sections 122.41(j)(5) and (k)(2) because the enforcement authority under the Water Code is more stringent. In lieu of these conditions, this Order incorporates by reference Water Code section 13387(e).

B. Special Provisions

1. Reopener Provisions

a. The Order may be reopened and modified in accordance with NPDES regulations at 40 CFR Parts 122 and 124, as necessary, to include additional conditions or limitations based on newly available information or to implement any USEPA approved, new, State water quality objective.

   This Order may be modified, revoked and reissued, or terminated for cause including, but not limited to, the following:

   i. Violations of any terms or conditions of this Order

   ii. Obtaining this Order by misrepresentation or failure to disclose fully all relevant facts.

   iii. A cha nge in any condition that requires either a temporary or permanent reduction or elimination of the authorized discharge.

b. This Order may be re-opened and modified, to incorporate in accordance with the provisions set forth in 40 CFR Parts 122 and 124, to include requirements for the implementation of the watershed management approach.

c. This Order may be re-opened and modified, revoked, and reissued or terminated in accordance with the provisions of 40 CFR sections 122.44, 122.62 to 122.64, 125.62, and 125.64. Causes for taking such actions include, but are not limited to, failure to comply with any condition of this Order and permit, and

endangerment to human health or the environment resulting from the permitted activity.

d. This Order may be re-opened and modified, to incorporate additional limitations, prohibitions, and requirements, based on the results of additional monitoring required by the MRP.

e. The filing of a request by the Discharger for modifications, revocation and reissuance, or termination of this Order, or a notification of planned change in or anticipated noncompliance with this Order does not stay any condition of this Order.

2. Special Studies and Additional Monitoring Requirements

a. Toxicity Reduction Requirements

The Basin Plan contains a narrative toxicity objective that states, "*All waters shall be maintained free of toxic substances in concentrations that produce detrimental physiological responses in human, plant, animal, or aquatic life.*" (Basin Plan at page 3-29.) This provision requires the Discharger to develop an Initial Investigative TRE Workplan in accordance with USEPA guidance which shall include steps the Discharger intends to follow if toxicity is measured above the effluent limitation for acute toxicity. This provision also includes requirements to initiate the TRE/TIE process if the results of acute toxicity testing exceed the effluent limitation for acute toxicity.

3. Best Management Practices and Pollution Prevention

a. To carry out the purpose and intent of the CWA, the previous Order required the Discharger to develop and implement a BMP plan, as authorized by CWA section 304(e) and section 402(p), for toxic pollutants and hazardous substances, and for the control of storm water discharges. This Order requires the Discharger to continue to implement and regularly update an adequate BMP Plan as specified in Attachment G.

4. Construction, Operation, and Maintenance Specifications – Not Applicable

5. Special Provisions for Municipal Facilities (POTWs Only) – Not Applicable

6. Other Special Provisions – Not Applicable

7. Compliance Schedules – Not Applicable

VIII. PUBLIC PARTICIPATION

The Regional Water Board is considering the issuance of WDRs that will serve as a NPDES permit for CMSD. As a step in the WDR adoption process, the Regional Water Board staff has developed tentative WDRs. The Regional Water Board encourages public participation in the WDR adoption process.

A. Notification of Interested Parties

The Regional Water Board has notified the Discharger and interested agencies and persons of its intent to prescribe waste discharge requirements for the discharge and has provided them with an opportunity to submit their written comments and recommendations. Notification was provided through the following: Published in the San Diego Union-Tribune on May 19, 2008 and again on July 3, 2008, posted on the Regional Board website on May 20, 2008 and updated on July 3, 2008, and sent by mail on May 20, 2008 and again on July 14, 2008.

B. Written Comments

The staff determinations are tentative. Interested persons are invited to submit written comments concerning the tentative WDRs. Comments must be submitted either in person or by mail to the Executive Office at the Regional Water Board at the address above on the cover page of this Order.

To be fully responded to by staff and considered by the Regional Water Board, written comments must be received at the Regional Water Board offices by 5:00 p.m. on August 6, 2008.

C. Public Hearing

The Regional Water Board will hold a public hearing on the tentative WDRs during its regular Board meeting on the following date and time and at the following location:

Date:	**August 13, 2008**
Time:	**9:00 AM**
Location:	**Regional Water Quality Control Board, San Diego Region** ***Board Meeting Room*** **9174 Sky Park Court, Suite 100** **San Diego, CA 92123**

Interested persons are invited to attend. At the public hearing, the Regional Water Board will hear testimony, if any, pertinent to the discharge, WDRs, and permit. Oral testimony will be heard; however, for accuracy of the record, important testimony should be in writing.

Please be aware that dates and venues may change. Our Web address is www.waterboards.ca.gov/sandiego where you can access the current agenda for changes in dates and locations.

D. Waste Discharge Requirements Petitions

Any aggrieved person may petition the State Water Resources Control Board to review the decision of the Regional Water Board regarding the final WDRs. The petition must be submitted within 30 days of the Regional Water Board's action to the following address:

State Water Resources Control Board
Office of Chief Counsel
P.O. Box 100, 1001 I Street
Sacramento, CA 95812-0100

E. Information and Copy ing

The Report of Waste Discharge (RWD), related documents, tentative effluent limitations and special provisions, comments received, and other information are on file and may be inspected at the Regional Water Board's address above at any time between 8:30 a.m. and 4:45 p.m., Monday through Friday. Copying of documents may be arranged through the Regional Water Board by calling (858) 467-2952.

F. Register of Interested Persons

Any person interested in being placed on the mailing list for information regarding the WDRs and NPDES permit should contact the Regional Water Board, reference this facility, and provide a name, address, and phone number.

G. Additional Information

Requests for additional information or questions regarding this Order should be directed to Vicente R. Rodriguez at (858) 627-3940.

ATTACHMENT G - BEST MANAGEMENT PRACTICES PROGRAM REQUIREMENTS

I. Objectives

The Best Management Practices (BMP) Plan has two primary objectives:

A. To identify and evaluate sources of wastes and pollutants associated with ship construction, modification, repair, and maintenance facilities and activities which may affect the quality of waters of the State and waters of the United States; and

B. To identify and implement site-specific BMP to reduce or prevent the discharge of wastes and pollutants to waters of the State and waters of the United States.

II. Best Management Practices Program Manual

The Discharger's BMP Plan shall be set forth in a written BMP Plan Manual that contains descriptions of onsite activities, pollutant sources, and pollutants; descriptions of BMPs used at the site; drawings; maps; and copies of and/or references to parts of other relevant programs. The BMP Plan Manual shall be revised whenever appropriate. It shall be readily available for review by Facility employees, other onsite personnel, and Regional Water Board, U.S. Environmental Protection Agency (USEPA), SDUPD, and other authorized inspectors.

The BMP Plan Manual is considered a report that shall be available to the public from the Regional Water Board under section 308(b) of the Clean Water Act.

III. Planning and Organization

A. Pollution Prevention and Control Personnel

The BMP Plan Manual shall identify the positions and individuals responsible for development, implementation, and revision of the BMP Plan and for conducting all monitoring requirements specified in this Order. The BMP Plan Manual shall clearly identify the responsibilities, duties, and activities of all pollution prevention and control personnel.

B. Related Regulatory Requirements

The BMP Plan Manual shall contain or incorporate by reference the appropriate elements of programs implemented at the site in connection with other regulatory requirements. The Discharger shall review all local, State, and federal requirements that impact, complement, are related to, or are consistent with the requirements of this Order. The BMP Plan Manual shall identify any existing onsite programs that include water pollution prevention or control measures relating to the requirements of this Order.

IV. Site Map

The BMP Plan Manual shall include a site map that includes notes, legends, and other data as appropriate to ensure that the site map is clear and understandable. The site map shall be on an 8-1/2 x 11 inch or larger sheet. If necessary, the required information may be shown on multiple site maps.

The following information shall be included on the site map:

A. The site boundaries; the boundaries of all drainage areas on the site; portions of the site impacted by run-on from surrounding areas; direction of flow and outlet point of each drainage area; onsite and nearby waters of the United States; areas of soil erosion; and municipal and onsite storm drain inlets into which runoff from the site may flow.

B. The location of the site runoff collection and conveyance system and associated points of discharge, direction of flow, and any structural control measures that affect site runoff and run-on. Examples of structural control measures are storm drain inlets, catch basins, berms, detention ponds, secondary containment, oil/water separators, diversion barriers, etc.

C. The boundaries of all impervious areas of the site, including paved areas, buildings, covered storage areas, or other roofed structures and respective discharge points.

D. Locations where materials are directly exposed to precipitation and the locations where significant spills or leaks, identified in accordance with section VI.A.4 below, have occurred.

E. Areas of industrial activity; this shall include the locations of all storage areas and storage tanks, shipping and receiving areas, fueling areas, vehicle and equipment storage/maintenance areas, material handling and processing areas, waste treatment, storage, and disposal areas, dust or particulate generating areas, cleaning and rinsing areas, and other areas of industrial activity which are potential pollutant sources.

V. List of Significant Ma terials

The BMP Plan Manual shall include a list of significant materials handled and stored at the site. For each material on the list, the locations where the material is stored, received, shipped, and handled, as well as the typical quantities and frequencies, shall be described. The materials list shall include raw materials, intermediate products, final or finished products, recycled materials and waste or disposed materials.

VI. Description of Potential Pollutant Sources

A. The BMP Plan Manual shall include a narrative description of the industrial activities at the site, as identified in accordance with section IV.E above, associated potential pollutant sources, and pollutants that could be discharged. At a minimum, the following

items related to industrial activities and the site shall be addressed:

1. Industrial Processes

   Each industrial process; the type, characteristics, and quantity of significant materials used in or resulting from the process; and description of the manufacturing, cleaning, rinsing, recycling, disposal, or other activities related to the process shall be described. Where applicable, areas protected by containment structures and the corresponding containment capacity shall be described.

2. Material Handling and Storage Areas

   Each handling and storage area; the type, characteristics, and quantity of significant materials handled or stored; shipping, receiving, and loading procedures; and spill and leak prevention and response procedures shall be described. Where applicable, areas protected by containment structures and the corresponding containment capacity shall be described.

3. Dust and Particulate Generating Activities

   All activities that generate dust or particulates and their discharge locations, the characteristics of dust and particulate pollutants, the approximate quantity of dust and particulate pollutants generated, and the primary locations where dust and particulate pollutants would settle shall be identified.

4. Significant Spills and Leaks

   Materials that have spilled or leaked in significant quantities since April 17, 1994, including toxic chemicals (listed in 40 CFR 302) that have been discharged, as reported on USEPA Form R, and oil and hazardous substances in excess of reportable quantities (see 40 CFR 110, 117, and 302) shall be described.

   The description shall include the type, characteristics, and approximate quantity of the materials spilled or leaked, the cleanup or remedial actions that have occurred or are planned, the approximate remaining quantity of materials that could be discharged, and the preventive measures taken to ensure spills and leaks do not recur. This list shall be updated continuously during the term of this Order.

5. Discharges

   The Discharger shall investigate its site to identify all discharges and their sources. As part of this investigation, all drains (inlets and outlets) shall be evaluated to identify whether they connect to an onsite or municipal storm drain system or otherwise empty into waters of the United States.

   All discharges shall be described. This shall include the source, quantity, frequency, and characteristics of the discharges and associated drainage area.

The BMP Plan Manual shall include BMPs to prevent, or minimize, the potential for contact of water discharged from the site, with significant materials and equipment.

6. Soil Erosion

The site locations where soil erosion could occur shall be identified.

B. Th e BMP Plan Manual shall include a summary of all areas of industrial activities, potential pollutant sources, and pollutants that could be discharged. This information shall be summarized in a form similar to Table G-1. The last column of Table G-1 "Best Management Practices," shall be completed in accordance with section VIII below.

EXAMPLE

Table G-1. Assessment of Potential Pollution Sources and Corresponding Best Management Practices

Area	Activity	Pollutant Source	Pollutant	Best Management Practices
Vehicle & Equipment Fueling	Fueling	Spills and leaks during delivery	Fuel oil	- Use spill and overflow protection - Minimize run-on of storm water into the fueling area - Cover fueling area - Use dry cleanup methods rather than hosing down area - Implement proper spill prevention control program - Implement adequate preventive maintenance program to prevent tank and line leaks - Inspect fueling areas regularly to detect problems before they occur - Train employees on proper fueling, cleanup, and spill response techniques
		Spills caused by topping off fuel tanks	Fuel oil	
		Hosing or washing down fuel area	Fuel oil	
		Leaking storage tanks	Fuel oil	
		Rainfall running off fueling area, and rainfall running onto and off fueling area	Fuel oil	

VII. Assessment of Potential Pollutant Sources

A. Th e BMP Plan Manual shall include a narrative assessment of all industrial activities and potential pollutant sources as described in accordance with section VI above to determine:

1. Which areas of the site and activities at the site are likely sources of pollutants, and

2. Which pollutants are likely to be discharged. When performing this assessment, the Discharger shall consider and evaluate various factors, including current BMPs; quantities of significant materials handled, produced, stored, or disposed of; locations of potential pollutant sources; form of pollutants; likelihood of exposure of pollutants to wind and site runoff; history of spills and leaks; run-on from offsite sources; and other factors as appropriate for each potential pollutant source and each pollutant.

B. Th e BMP Plan Manual shall identify the areas of and activities at the site that are likely sources of pollutants and the corresponding pollutants that are likely to be discharged.

The Discharger shall develop and implement BMPs as appropriate and necessary to prevent, or minimize the potential for, the discharge of pollutants associated with each potential pollutant source. The BMPs shall be described in accordance with section VIII below.

VIII. Best Management Practices

A. Th e BMP Plan shall include a narrative description of the BMPs to be implemented at the site for each pollutant and its potential source(s) identified in accordance with sections VI and VII above. The BMPs shall be developed and implemented to prevent, or minimize the potential for, the discharge of pollutants. Each pollutant and its potential source(s) may require one or more BMPs. Some BMPs may be appropriate for multiple pollutants and/or multiple potential sources, while other BMPs may be appropriate for only a single pollutant and/or only a single potential source.

The description of the BMPs shall identify the BMPs as (1) existing BMPs, (2) existing BMPs to be revised and implemented, or (3) new BMPs to be implemented. The description shall also include a discussion of the effectiveness of each BMP to prevent, or minimize the potential for, the discharge of pollutants. The BMP Plan Manual shall include a summary of the BMPs implemented for each potential pollutant source. This information shall be summarized in a form similar to Table G-1.

B. Th e Discharger shall give highest priority to development and implementation of "Preventive BMPs," i.e., measures to reduce or eliminate the generation of pollutants and waste, such as waste minimization and Pollution Prevention (P2).

In addition, the Discharger shall develop and implement "Control BMPs," i.e. measures to control or manage pollutants and waste after they are generated and before they come into contact with water, including measures to prevent leaks, spills, and other releases.

The Discharger shall also develop and implement "Treatment BMPs," i.e., measures to remove pollutants and waste from water released to San Diego Bay.

As a contingency, the Discharger shall also develop and, as necessary, implement "Response BMPs," i.e., measures to respond to leaks, spills, and other releases with containment, control, and cleanup to prevent, or minimize the potential for, the discharge of pollutants and to minimize the adverse effects of such discharges.

C. The BMP Plan shall include BMPs which adequately address the following:

1. Control of large solid materials
2. Abrasive blasting
3. Oil, grease, and fuel transfers
4. Paint and solvent use
5. Dust and overspray
6. Over water activities
7. Storm drain inlet protection
8. Hose, piping, and fitting use and maintenance
9. Segregation of water not containing pollutants from pollutants and from water containing pollutants
10. Segregation of water from debris
11. Hydroblasting
12. Material (including waste) storage
13. Sewage (black water) disposal
14. Gray water disposal
15. Oily bilge and ballast water disposal
16. Floating dry dock, graving dock, shipbuilding ways, and marine railway cleanup
17. Sally port protection
18. Discharges resulting from wind, tidal action, and site runoff (including rainfall runoff and other miscellaneous water flows)
19. Leaks and spills
20. Waste (including sludge) disposal
21. Recovery of ship launch grease/wax
22. Other activities with potential to result in discharges of wastes or pollutants to waters of the United States.

D. The BMP Plan Manual shall include non-structural and structural BMPs as appropriate.

1. Non-structural BMPs include but are not limited to:

   a. Good Housekeeping

      This consists of practical procedures to maintain a clean and orderly site, to separate water from pollutants, and to separate pollutants from water.

   b. Preventive Maintenance

This includes the regular inspection and maintenance, including testing, of structural controls (catch basins, oil/water separators, etc.) as well as other site equipment and systems.

c. Material Handling and Storage

This includes procedures to minimize the potential for spills and leaks and to minimize exposure of significant materials to water.

d. Spill and Leak Response

This includes containment, control, and cleanup procedures.

e. Onsite Personnel Training

This includes training of all onsite personnel whose actions or lack thereof could result in the discharge of pollutants. Such personnel include employees of the Discharger as well as other onsite personnel, such as personnel associated with subcontractors, customers (e.g. U.S. Navy), and others. This also includes training of personnel who are responsible for (1) implementing the BMP Plan, (2) conducting inspections, sampling, and visual observations, and (3) managing the site drainage system. Training should address topics such as good housekeeping, material handling and storage, spill response, and actions necessary to implement all BMPs identified in the BMP Plan Manual. The BMP Plan Manual shall identify periodic dates for such training. Records shall be maintained of all training sessions held.

f. Waste Handling/Recycling

This includes procedures and processes to handle, store, recycle, and dispose of waste materials.

g. Recordkeeping and Internal Reporting

This includes procedures to ensure that all records of inspections, spills, maintenance activities, corrective actions, visual observations, etc., are developed, retained, and provided, as necessary, to the appropriate personnel.

h. Erosion Control and Site Stabilization

This includes all sediment and erosion control activities. This may include the planting and maintenance of vegetation, diversion of run-on and runoff, placement of sandbags, silt screens, or other sediment and erosion control devices, etc.

i. Inspections

This includes, in addition to the preventive maintenance inspections identified above, an inspection schedule of all potential pollutant sources. Tracking and follow-up procedures shall be implemented to ensure adequate corrective actions are taken and adequate BMPs are developed and implemented.

j. Quality Assurance

This includes procedures to ensure that the BMP Plan is adequate and that all elements of the BMP Plan are completely implemented.

2. Structural BMPs include but are not limited to:

a. Overhead Coverage

This includes structures that provide coverage over or enclosure of materials, work areas, and potential pollutant sources.

b. Retention Ponds

This includes basins, ponds, surface impoundments, bermed areas, etc., that prevent pollutants from being discharged from the site.

c. Control Devices

This includes berms or other devices that channel or route water away from potential pollutant sources.

d. Secondary Containment Structures

This includes structures around storage tanks and other areas for the purpose of containing leaks and spills.

e. Treatment

This includes inlet controls, infiltration devices, oil/water separators, detention ponds, vegetative swales, etc., which remove pollutants from water before they are discharged.

IX. Annual Comprehensive Site Compliance Evaluation

The Discharger shall conduct at least one comprehensive site compliance evaluation (evaluation) annually. The evaluation shall be conducted not less than 8 or more than 16 months apart. The BMP Plan shall be revised, as appropriate, and the revisions implemented within 90 days of the evaluation. Evaluations shall include the following:

A. A review of all visual o bservation records, inspection records, and sampling and analysis results.

B. A visual inspectio n of all potential pollutant sources for evidence of, or the potential for, the discharge of pollutants.

C. A review and evaluation of all BMPs (both structural and non-structural) to determine whether the BMPs are adequate, properly implemented and maintained or whether additional BMPs are needed. A visual inspection of equipment needed to implement the BMP Plan, such as spill response equipment, shall be included.

D. An evaluation report that includes, (1) identification of personnel performing the evaluation, (2) the date(s) of the evaluation, (3) necessary BMP Plan revisions, (4) schedule for implementing BMP Plan revisions, (5) any incidents of non-compliance and the corrective actions taken, and (6) a certification that the Discharger is in compliance with this Order. If the above certification cannot be provided, the evaluation report shall include an explanation of why the Discharger is not in compliance with this Order. The evaluation report shall be submitted as part of the annual effluent report (see Monitoring and Reporting Program), retained for at least 5 years, and signed and certified in accordance with the requirements of this Order.