CALIFORNIA REGIONAL WATER QUALITY CONTROL BOARD
REGION 9, SAN DIEGO REGION

ORDER NO. R9-2006-0067
NPDES NO. CA0109045

WASTE DISCHARGE REQUIREMENTS FOR THE CITY OF SAN DIEGO SOUTH BAY WATER RECLAMATION PLANT DISCHARGE TO THE PACIFIC OCEAN VIA THE SOUTH BAY OCEAN OUTFALL

The following Discharger is subject to waste discharge requirements as set forth in this Order:

Table 1. Discharger Information

Discharger	City of San Diego Metropolitan Wastewater Department
Name of Facility	South Bay Water Reclamation Plant
Facility Address	2411 Dairy Mart Road San Diego, CA 92154 San Diego County

The discharge by the City of San Diego from the discharge point identified below is subject to waste discharge requirements as set forth in this Order.

Table 2. Outfall Location

Discharge Point	Effluent Description	Discharge Point Latitude	Discharge Point Longitude	Receiving Water
Outfall 001	POTW Effluent	32° 32' 15" N	117° 11' 00" W	Pacific Ocean

Table 3. Administrative Information

This Order was adopted by the Regional Water Board on:	November 8, 2006
This Order shall become effective on:	January 1, 2007
This Order shall expire on:	January 1, 2012
The U.S. Environmental Protection Agency (USEPA) and the Regional Water Board have classified this discharge as a major discharge.	
The Discharger shall file a Report of Waste Discharge in accordance with Title 23, California Code of Regulations, not later than 180 days in advance of the Order expiration date as application for issuance of new waste discharge requirements.	

IT IS HEREBY ORDERED, that this Order supersedes Order No. 2000-129 except for enforcement purposes, and, in order to meet the provisions contained in Division 7 of the California Water Code and regulations adopted thereunder, and the provisions of the federal Clean Water Act and regulations and guidelines adopted thereunder, the Discharger shall comply with the requirements herein.

I, John H. Robertus, Executive Officer, do hereby certify that this Order with all attachments is a full, true, and correct copy of an Order adopted by the California Regional Water Quality Control Board, San Diego Region, on November 8, 2006.

for JOHN H. ROBERTUS
Executive Officer

CALIFORNIA REGIONAL WATER QUALITY CONTROL BOARD
REGION 9, SAN DIEGO REGION

ORDER NO. R9-2006-0067
NPDES NO. CA0109045

WASTE DISCHARGE REQUIREMENTS FOR THE CITY OF SAN DIEGO SOUTH BAY WATER RECLAMATION PLANT DISCHARGE TO THE PACIFIC OCEAN VIA THE SOUTH BAY OCEAN OUTFALL

TABLE OF CONTENTS

I. Facility Information 4
II. Findings 5
III. Discharge Prohibitions 10
IV. Discharge Specifications and Effluent Limitations 12
  A. Discharge Specifications 12
  B. Effluent Limitations and Performance Goals 13
V. Receiving Water Limitations 18
  A. Bacterial Characteristics 19
  B. Chemical Characteristics 19
  C. Biological Characteristics 20
  D. Radioactivity 20
VI. Provisions 20
  A. Standard Provisions 20
  B. Monitoring and Reporting Program Requirements 23
  C. Special Provisions 23
VII. Compliance Determination 32
  A. Compliance with Average Monthly Effluent Limitation (AMEL) 32
  B. Compliance with Average Weekly Effluent Limitation (AWEL) 33
  C. Compliance with Maximum Daily Effluent Limitation (MDEL) 33
  D. Compliance with Instantaneous Minimum Effluent Limitation 33
  E. Compliance with Instantaneous Maximum Effluent Limitation 33
  F. Compliance with Six-month Median Effluent Limitation 33
  G. Mass and Concentration Limitations 34
  H. Percent Removal 34
  I. 2005 California Ocean Plan Provisions for Table B Constituents 34
  J. Acute Toxicity 37
  K. Chronic Toxicity 38
  L. Toxicity Reduction Evaluation (TRE) 39
  M. Mass Emission Rate (MER) 39
  N. Bacterial Standards and Analysis 39
  O. Single Operational Upset 40

LIST OF TABLES

Table 1 Discharger Information 1
Table 2 Outfall Location 1
Table 3 Administrative Information 1
Table 4 Facility Informattion 4
Table 5 Basin Plan Beneficial Uses of the Pacific Ocean 7
Table 6 2005 California Ocean Plan Beneficial Uses of the Pacific Ocean 8
Table 7 Effluent Limitations 13
Table 8 Performance Goals 14

LIST OF ATTACHMENTS

Attachment A Definitions A-1
Attachment B Map B-1
Attachment C Flow Schematic C-1
Attachment D Federal Standard Provisions D-1
Attachment E Monitoring and Reporting Program (MRP) E-1
Attachment F Fact Sheet F-1
Attachment G Diluton Model Information G-1

I. FACILITY INFORMATION

The following Discharger is subject to waste discharge requirements as set forth in this Order:

Table 4. Facility Information

Discharger	City of San Diego Metropolitan Wastewater Department
Name of Facility	South Bay Water Reclamation Plant
Facility Address	2411 Dairy Mart Road San Diego, CA 92154 San Diego County
Facility Contact, Title, and Phone	Scott Tulloch, Director, (858) 292-6401
Mailing Address	9192 Topaz Way San Diego, CA 92123
Type of Facility	Municipal Publicly-Owned Treatment Works
Facility Design Flow	15 million gallons per day

II. FINDINGS

The California Regional Water Quality Control Board, San Diego Region (hereinafter Regional Water Board), finds:

A. Background. The City of San Diego (Discharger) is the owner and operator of the South Bay Water Reclamation Plant (SBWRP), the San Ysidro sanitary sewer system, and a portion of the Imperial Beach sanitary sewer system; together these facilities comprise the municipal publicly-owned treatment works (POTW). Hereinafter, these facilities are collectively referred to as the Discharger's Facilities. The Discharger discharges effluent consisting of treated wastewater from the SBWRP through the South Bay Ocean Outfall (SBOO) to the Pacific Ocean, a water of the United States, and is currently regulated by Order No. 2000-129, which was adopted on September 13, 2000 and expired on September 13, 2005. The terms of the existing Order automatically continued in effect after the permit expiration date. The Discharger filed a Report of Waste Discharge (RoWD) and submitted an application for renewal of its Waste Discharge Requirements (WDRs) and National Pollutant Discharge Elimination System (NPDES) permit on March 18, 2005. Supplemental Information was received on August 30, 2005. Subsequently, comments on the application/RoWD were provided to the Discharger and the Discharger submitted a revised complete application/RoWD.

B. Facility Description. The City of San Diego owns and operates the SBWRP, the San Ysidro sanitary sewer system, and a portion of the Imperial Beach sanitary sewer system. The City of San Diego and the Federal Government jointly own and operate the SBOO. The Discharger provides municipal wastewater treatment services to a population of approximately 150,000. SBWRP treats wastewater collected from the southern portion of the City of San Diego. The City of Chula Vista, and unincorporated portions of South County and East County also contribute wastewater flows to the SBWRP. Raw sewage from several City of San Diego communities, including San Ysidro, Otay Mesa, and the Tijuana River Valley are directed to Grove Avenue Pump Station (GAPS) and the Otay River Pump Station. Wastewater from the GAPS and the Otay River Pump Station is primarily domestic sewage from residential and commercial activities.

The City of San Diego maintains a United States Environmental Protection Agency (USEPA)-approved pretreatment program for the SBWRP regulated by the Industrial Wastewater Control Branch of the Metropolitan Wastewater Department.

The SBWRP is located on a 22.3-acre site at 2411 Dairy Mart Road in the City of San Diego. SBWRP produces treated recycled water, which is transmitted via a recycled water distribution system to qualified recycled water customers. SBWRP production in excess of recycled water demands is directed to the SBOO for ocean disposal.

Wastewater treatment unit operations and processes at SBWRP consist of influent screening using mechanically cleaned bar screens, grit removal using aerated grit chambers, primary sedimentation using rectangular primary clarifiers, primary effluent

flow equalization (1.5 million gallons), biological treatment with the air-activated sludge process and an anoxic selector zone, secondary clarification using rectangular clarifiers, direct filtration using conventional deep bed mono-media (anthracite) filters, and disinfection using ultraviolet light from high intensity, medium pressure lamps.

All SBWRF flows undergo primary and secondary treatment. The quantity of flows directed to SBWRP tertiary filtration facilities is dependent on anticipated recycled water demands. During times of no recycled water demand, up to 15 MGD of the secondary effluent will be directed to the Pacific Ocean via the SBOO. During times of maximum recycled water demand, the entire flow may be directed to tertiary treatment and subsequent beneficial reuse.

Solids removed through the screening and grit removal processes are hauled offsite and disposed of in a landfill. Waste solids removed through the sedimentation/clarification process are returned to the sewer for transport to the City of San Diego Point Loma Wastewater Treatment Plant, where they are again removed and directed to anaerobic digesters at the Point Loma Wastewater Treatment Plant for stabilization. After digestion, the solids are dewatered and thickened for reuse as a soil amendment, or for disposal.

Secondary treatment design capacity at SBWRP is currently 18.0 MGD as a 30-day average daily flow. The current maximum permitted flow is 15 MGD.

C. **Legal Authorities.** This Order is issued pursuant to section 402 of the Federal Clean Water Act (CWA) and implements regulations contained in the Code of Federal Regulations (CFR) adopted by the USEPA and Chapter 5.5, Division 7 of the California Water Code (CWC). It shall serve as a NPDES permit for point source discharges from the Discharger's Facilities to surface waters. This Order also serves as WDRs pursuant to Article 4, Chapter 4 of the CWC.

D. **Background for Rationale for Requirements.** The Regional Water Board developed the requirements in this Order based on information submitted as part of the application, through monitoring and reporting programs, and other available environmental data. The Fact Sheet, Attachment F, which contains background information and rationale for Order requirements and other provisions, is hereby incorporated into this Order and, thus, constitutes part of the Findings for this Order.

E. **California Environmental Quality Act (CEQA).** This action to adopt an NPDES permit is exempt from the provisions of the California Environmental Quality Act (Public Resources Code Section 21100, et seq.) in accordance with Section 13389 of the CWC.

F. **Technology-Based Effluent Limitations.** 40 CFR 122.44(a) requires that permits include applicable technology-based limitations and standards. This Order includes technology-based effluent limitations based on Secondary Treatment Standards at 40 CFR Part 133. A detailed discussion of the technology-based effluent limitations development is included in the Fact Sheet (Attachment F).

G. Water Quality-Based Effluent Limitations. Section 122.44(d) of 40 CFR requires that permits include water quality-based effluent limitations (WQBELs) to attain and maintain applicable numeric and narrative water quality objectives to protect the beneficial uses of the receiving water. Where numeric water quality objectives have not been established, 40 CFR 122.44(d) specifies that WQBELs may be established using USEPA criteria guidance under CWA Section 304(a), proposed State criteria or a State policy interpreting narrative criteria supplemented with other relevant information, or an indicator parameter.

H. Water Quality Control Plans. The Regional Water Board adopted a Water Quality Control Plan for the San Diego Basin (hereinafter Basin Plan) on September 8, 1994. The Basin Plan was subsequently approved by the State Water Resources Control Board (State Water Board) on December 13, 1994. Subsequent revisions to the Basin Plan have also been adopted by the Regional Water Board and approved by the State Water Board. The Basin Plan designates beneficial uses, establishes water quality objectives, and contains implementation programs and policies to achieve those objectives for all waters addressed through the plan. Beneficial uses applicable to the Pacific Ocean are as follows:

Table 5. Basin Plan Beneficial Uses of the Pacific Ocean

Discharge Point	Receiving Water Name	Beneficial Use
Outfall 001	Pacific Ocean	Industrial Service Supply (IND); Navigation (NAV); Contact Water Recreation (REC-1); Non-Contact Water Recreation (REC-2); Commercial and Sport Fishing (COMM); Preservation of Biological Habitats of Special Significance (BIOL); Wildlife Habitat (WILD); Rare, Threatened, or Endangered Species (RARE); Marine Habitat (MAR); Aquaculture (AQUA); Migration of Aquatic Organisms (MIRG); Spawning, Reproduction, and/or Early Development (SPWN); Shellfish Harvesting (SHELL)

The Basin Plan relies primarily on the requirements of the *Water Quality Control Plan for Ocean Waters of California* (California Ocean Plan or COP) for protection of the beneficial uses of the State ocean waters. The Basin Plan, however, may contain additional water quality objectives applicable to the Discharger.

On April 21, 2005 the State Water Board adopted the latest revised California Ocean Plan. The revised California Ocean Plan became effective on February 14, 2006. The California Ocean Plan contains water quality objectives and beneficial uses for the ocean waters of California. The beneficial uses of State ocean waters to be protected are summarized below:

Table 6. 2005 California Ocean Plan Beneficial Uses of the Pacific Ocean

Discharge Point	Receiving Water Name	Beneficial Use
Outfall 001	Pacific Ocean	Industrial Water Supply; Water Contact and Non-Contact Recreation, Including Aesthetic Enjoyment; Navigation; Commercial and Sport Fishing; Mariculture; Preservation and Enhancement of Designated Areas of Special Biological Significance (ASBS); Rare and Endangered Species; Marine Habitat; Fish Migration; Fish Spawning and Shellfish Harvesting

In order to protect these beneficial uses, the California Ocean Plan establishes water quality objectives (for bacterial, physical, chemical, and biological characteristics, and for radioactivity), general requirements for management of waste discharged to the ocean, quality requirements for waste discharges (effluent quality requirements), discharge prohibitions, and general provisions.

The State Water Board adopted a *Water Quality Control Plan for Control of Temperature in the Coastal and Interstate Water and Enclosed Bays and Estuaries of California* (Thermal Plan) on May 18, 1972, and amended it on September 18, 1975. The Thermal plan contains temperature objectives for coastal waters.

The terms and conditions of the California Ocean Plan, Thermal Plan, and any revisions thereto are incorporated into the Basin Plan by reference. In addition, State Water Board Resolution No. 88-63 requires that, with certain exceptions, the Regional Water Board assign the municipal and domestic supply use to water bodies that do not have beneficial uses listed in the Basin Plan.

Requirements of this Order specifically implement the applicable Water Quality Control Plans.

I. **Stringency of Requirements for Individual Pollutants**. This Order contains restrictions on individual pollutants that are no more stringent than required by the federal Clean Water Act. Individual pollutant restrictions consist of technology-based restrictions and water quality-based effluent limitations. The technology-based effluent limitations consist of restrictions on carbonaceous biochemical oxygen demand (CBOD5), total suspended solids (TSS), and hydrogen ion concentration (pH). Restrictions on CBOD5, TSS, and pH are specified in federal regulations as discussed in Finding F, and the Order's technology-based pollutant restrictions are no more stringent than required by the Clean Water Act. Water quality-based effluent limitations have been derived to implement water quality objectives that protect beneficial uses. Both the beneficial uses and the water quality objectives have been approved pursuant to federal law and are the applicable federal water quality standards. All beneficial uses and water quality objectives contained in the Basin Plan and the California Ocean Plan were approved under state law and submitted to and approved by USEPA prior to May 30, 2000. Any water quality objectives and beneficial uses submitted to USEPA prior to May 30, 2000, but not approved by USEPA before that date, are nonetheless

"applicable water quality standards for purposes of the CWA" pursuant to 40 CFR 131.21(c)(1). The remaining water quality objectives and beneficial uses implemented by this Order (specifically temperature) were adopted in the Water Quality Control Plan for Control of Temperature in the Coastal and Interstate Water and Enclosed Bays and Estuaries of California (Thermal Plan) on May 18, 1972 and amended on September 18, 1975 and are applicable water quality standards pursuant to 40 CFR 131.21(c)(1). Collectively, this Order's restrictions on individual pollutants are no more stringent than required to implement the technology-based requirements of the Clean Water Act and the applicable water quality standards for purposes of the CWA.

J. Antidegradation Policy. 40 CFR 131.12 requires that State water quality standards include an antidegradation policy consistent with the federal policy. The State Water Board established California's antidegradation policy in State Water Board Resolution No. 68-16, which incorporates the requirements of the federal antidegradation policy. Resolution No. 68-16 requires that existing quality of waters be maintained unless degradation is justified based on specific findings. As discussed in detail in the Fact Sheet (Attachment F), a discharge in compliance with this Order is consistent with the antidegradation provisions of 40 CFR 131.12 and State Water Board Resolution No. 68-16.

K. Anti-Backsliding Requirements. Sections 402(o)(2) and 303(d)(4) of the CWA and federal regulations at 40 CFR 122.44(l) prohibit backsliding in NPDES permits. These anti-backsliding provisions require effluent limitations in a reissued permit to be as stringent as those in the previous permit, with some exceptions where limitations may be relaxed. Some effluent limitations in the previous Order have been removed. As discussed in detail in the Fact Sheet (Attachment F), relaxation or removal of effluent limitations is consistent with the anti-backsliding requirements of the CWA and federal regulations.

L. Monitoring and Reporting. 40 CFR 122.48 requires that all NPDES permits specify requirements for recording and reporting monitoring results. Sections 13267 and 13383 of the CWC authorize the Regional Water Boards to require technical and monitoring reports. The Monitoring and Reporting Program (Attachment E) establishes monitoring and reporting requirements to implement federal and State requirements.

M. Standard and Special Provisions. Standard Provisions, which in accordance with 40 CFR 122.41and 122.42, apply to all NPDES discharges and must be included in every NPDES permit, are provided in Attachment D. The Regional Water Board has also included in this Order special provisions applicable to the Discharger. A rationale for the special provisions contained in this Order is provided in the attached Fact Sheet (Attachment F).

N. Notification of Interested Parties. The Regional Water Board has notified the Discharger and interested agencies and persons of its intent to prescribe waste discharge requirements for the discharge and has provided them with an opportunity to

submit their written comments and recommendations. Details of notification are provided in the Fact Sheet (Attachment F) of this Order.

O. **Consideration of Public Comment.** The Regional Water Board, in a public meeting, heard and considered all comments pertaining to the discharge. Details of the Public Hearing are provided in the Fact Sheet (Attachment F) of this Order.

THE DISCHARGER SHALL COMPLY WITH THE REQUIREMENTS AND PROVISIONS BELOW including Attachments D and E, which are specifically referenced in the requirements and provisions.

III. DISCHARGE PROHIBITIONS

A. The discharge of waste from the SBWRP not treated by a secondary treatment process and the discharge of waste from the Discharger's Facilities not in compliance with the effluent limitations specified in Section IV.B of this Order, and/or to a location other than the South Bay Ocean Outfall (Outfall 001), unless specifically regulated by this Order or separate waste discharge requirements, is prohibited.

B. The Discharger shall comply with the following waste discharge prohibitions of the Basin Plan:

1. The discharge of waste to waters of the state in a manner causing, or threatening to cause a condition of pollution, contamination, or nuisance as defined in CWC Section 13050, is prohibited.

2. The discharge of waste to land, except as authorized by waste discharge requirements or the terms described in CWC Section 13264 is prohibited.

3. The discharge of pollutants or dredged or fill material to waters of the United States except as authorized by an NPDES permit or a dredge or fill material permit (subject to the exemption described in CWC Section 13376) is prohibited.

4. The discharge of treated or untreated waste to lakes or reservoirs used for municipal water supply, or to inland surface water tributaries thereto, is prohibited.

5. The discharge of waste to inland surface waters, except in cases where the quality of the discharge complies with applicable receiving water quality objectives, is prohibited. Allowances for dilution may be made at the discretion of this Regional Water Board. Consideration would include streamflow data, the degree of treatment provided and safety measures to ensure reliability of facility performance. As an example, discharge of secondary effluent would probably be permitted if streamflow provided 100:1 dilution capability.

6. The discharge of waste in a manner causing flow, ponding, or surfacing on lands not owned or under the control of the discharger is prohibited unless the discharge is authorized by this Regional Water Board.

7. The dumping, deposition, or discharge of waste directly into waters of the state, or adjacent to such waters in any manner that may permit its being transported into the waters, is prohibited unless authorized by the Regional Water Board.

8. Any discharge to a storm water conveyance system that is not composed entirely of "storm water" is prohibited unless authorized by this Regional Water Board. [Federal Regulations 40 CFR 122.26 (b) defines storm water as storm water runoff, snow melt runoff, and surface runoff and drainage.]

9. The unauthorized discharge of treated or untreated sewage to waters of the state or to a storm water conveyance system is prohibited.

10. The discharge of radioactive wastes amenable to alternative methods of disposal into the waters of the state is prohibited.

11. The discharge of any radiological, chemical, or biological warfare agent into waters of the state is prohibited.

12. The discharge of sand, silt, clay, or other earthen materials from any activity, including land grading and construction, in quantities that cause deleterious bottom deposits, turbidity or discoloration in waters of the state or that unreasonably affect, or threaten to affect, beneficial uses of such waters is prohibited.

C. The discharge of waste shall not cause violation of water quality objectives for ocean waters established by Chapter II of the 2005 California Ocean Plan.

D. The discharge of waste to Areas of Special Biological Significance, as designated by the State Water Board, is prohibited.

E. The discharge of sludge to the ocean is prohibited; the discharge of municipal and industrial waste sludge directly to the ocean or into a waste stream that discharges to the ocean is prohibited. The discharge of sludge digester supernatant directly to the ocean or to a waste stream that discharges to the ocean without further treatment is prohibited.

F. The bypassing of untreated wastes containing concentrations of pollutants in excess of those in Tables A or B of the 2005 California Ocean Plan is prohibited.

IV. DISCHARGE SPECIFICATIONS AND EFFLUENT LIMITATIONS

A. Discharge Specifications

The discharge of effluent from the Discharger's Facilities through Outfall 001 shall comply with the following:

1. Waste management systems that discharge to the Pacific Ocean through Outfall 001 must be designed and operated in a manner that will maintain the indigenous marine life and a healthy and diverse marine community.

2. Waste discharged to the Pacific Ocean through Outfall 001 must be essentially free of:

    a. Material that is floatable or will become floatable upon discharge.

    b. Settleable material or substances that may form sediments, which will degrade benthic communities or other aquatic life.

    c. Substances that will accumulate to toxic levels in marine waters, sediments, or biota.

    d. Substances that significantly decrease the natural light to benthic communities and other marine life.

    e. Materials that result in aesthetically undesirable discoloration of the ocean surface.

3. Waste effluents from the Discharger's Facilities shall be discharged through Outfall 001 in a manner that provides sufficient initial dilution to minimize the concentrations of substances not removed in treatment.

4. The location of waste discharges from the Discharger's Facilities shall assure that:

    a. Pathogenic organisms and viruses are not present in areas where shellfish are harvested for human consumption or in areas used for swimming or other body contact sports.

    b. Natural water quality conditions are not altered in areas designated as being areas of special biological significance or areas that existing marine laboratories use as a source of seawater.

    c. Maximum protection is provided to the marine environment.

5. Waste that contains pathogenic organisms or viruses shall be discharged from the Facility through Outfall 001 a sufficient distance from shellfishing and water contact

sports areas to maintain applicable bacterial standards without disinfection. Where conditions are such that an adequate distance cannot be attained, reliable disinfection in conjunction with a reasonable separation of the discharge point from the area of use must be provided. Disinfection procedures that do not increase effluent toxicity and that constitute the least environmental and human hazard shall be used.

6. The calendar-monthly average of daily effluent discharge flow rates from the Discharger's Facilities through the South Bay Ocean Outfall shall not exceed 15 MGD.

B. Effluent Limitations and Performance Goals

The discharge of effluent to Outfall 001 shall be measured at Monitoring Location E-001 as described in the Attachment E, Monitoring and Reporting Program, except as otherwise noted. The effluent limitations and performance goals below are enforceable to the number of significant digits given in the effluent limitation or performance goal.

1. The discharge of effluent from SBWRP to Outfall 001, as monitored at Monitoring Location E-001, shall maintain compliance with the following effluent limitations:

Table 7a. Effluent Limitations based on Secondary Treatment Standards

Constituent	Units	Effluent Limitations					
		Max Daily	Average Monthly	Average Weekly	Instantaneous		6-Month Median
					Min	Max	
Biochemical Oxygen Demand (BOD) (5-day @ 20 Deg. C)	mg/l		30.	45.		50.	
	%	The average monthly percent removal shall not be less than 85 percent.					
Total Suspended Solids	mg/l		30.	45.		50.	
	%	The average monthly percent removal shall not be less than 85 percent.					
pH	Standard units				6.0	9.0	

2. The discharge of effluent from the Discharger's Facilities to Outfall 001, as monitored at Monitoring Location E-001, shall maintain compliance with the following effluent limitations:

Table 7b. Effluent Limitations based on 2005 California Ocean Plan

Constituent	Units	Effluent Limitations					
		Max Daily	Average Monthly	Average Weekly	Instantaneous		6-Month Median
					Min	Max	
Oil and Grease	mg/l		25.	40.		75.	
Settleable Solids	ml/l		1.	2.		3.	
Turbidity	NTU		75.	100.		230.	
Total Chlorine	ug/l	760.				5,700.	190.

Constituent	Units	Effluent Limitations					
		Max Daily	Average Monthly	Average Weekly	Instantaneous		6-Month Median
					Min	Max	
Residual	lb/day	96.				720.	24.
Copper, Total Recoverable	ug/l	960.				2,700.	97.
	lb/day	120.				330.	12.

3. Constituents that do not have reasonable potential or had inconclusive reasonable potential analysis results are referred to as performance goal constituents and assigned the performance goals listed in the following table. Performance goal constituents shall also be monitored at E-001, but the results will be used for informational purposes only, not compliance determination.

Table 8. Performance Goals Based on 2005 California Ocean Plan

Constituent	Units	Performance Goals[1]					
		Max Daily	Avg Monthly	Avg Weekly	Instantaneous		6 Month Median
					Min	Max	
Arsenic	ug/l	2.8E+03				7.4E+03	4.8E+02
	lb/day	3.5E+02				9.2E+02	6.0E+01
Cadmium	ug/l	3.8E+02				9.6E+02	9.6E+01
	lb/day	4.8E+01				1.2E+02	1.2E+01
Chromium VI [2]	ug/l	7.6E+02				1.9E+03	1.9E+02
	lb/day	9.6E+01				2.4E+02	2.4E+01
Lead	ug/l	7.6E+02				1.9E+03	1.9E+02
	lb/day	9.6E+01				2.4E+02	2.4E+01
Mercury	ug/l	1.5E+01				3.8E+00	3.8E+01
	lb/day	1.9E+00				4.8E-01	4.8E+00
Nickel	ug/l	1.9E+03				4.8E+03	4.8E+02
	lb/day	2.4E+02				6.0E+02	6.0E+01
Selenium	ug/l	5.7E+03				1.4E+04	1.4E+03
	lb/day	7.2E+02				1.8E+03	1.8E+02
Silver	ug/l	2.5E+02				6.5E+02	5.2E+01
	lb/day	3.2E+01				8.2E+01	6.5E+00
Zinc	ug/l	6.9E+03				1.8E+04	1.1E+03
	lb/day	8.6E+02				2.3E+03	1.4E+02
Cyanide [3]	ug/l	3.8E+02				9.6E+02	9.6E+01
	lb/day	4.8E+01				1.2E+02	1.2E+01
Ammonia (as N)	ug/l	2.3E+05				5.7E+05	5.7E+04
	lb/day	2.9E+04				7.2E+04	7.2E+03
Acute Toxicity	TUa	2.9E+01					
Chronic Toxicity [4]	TUc	9.6E+01					
Phenolic Compounds (non-chlorinated)	ug/l	1.1E+04				2.9E+04	2.9E+03
	lb/day	1.4E+03				3.6E+03	3.6E+02
Chlorinated Phenolics	ug/l	3.8E+02				9.6E+02	9.6E+01
	lb/day	4.8E+01				1.2E+02	1.2E+01

Constituent	Units	Performance Goals[1]					
		Max Daily	Avg Monthly	Avg Weekly	Instantaneous Min	Instantaneous Max	6 Month Median
Endosulfan [14]	ug/l	1.7E+00				2.6E+00	8.6E-01
	lb/day	2.1E-01				3.2E-01	1.1E-01
Endrin	ug/l	3.8E-01				5.7E-01	1.9E-01
	lb/day	5.0E-02				7.0E-02	2.0E-02
HCH [5]	ug/l	7.6E-01				1.1E+00	3.8E-01
	lb/day	1.0E-01				1.4E-01	4.0E-02
Radioactivity [6]	- - -	Not to exceed limits specified in Title 17 California Code of Regulations Section 30253, Standards for Protection Against Radiation					
Acrolein	ug/l		2.1E+04				
	lb/day		2.6E+03				
Antimony	ug/l		1.1E+05				
	lb/day		1.4E+04				
Bis(2-Chloroethoxy) Methane	ug/l		4.2E+02				
	lb/day		5.3E+01				
Bis(2-Chloroisopropyl) Ether	ug/l		1.1E+05				
	lb/day		1.4E+04				
Chlorobenzene	ug/l		5.4E+04				
	lb/day		6.8E+03				
Chromium (III)	ug/l		1.8E+07				
	lb/day		2.3E+06				
Di-N-Butyl Phthalate	ug/l		3.3E+05				
	lb/day		4.2E+04				
Dichlorobenzenes [7]	ug/l		4.9E+05				
	lb/day		6.1E+04				
Diethyl Phthalate	ug/l		3.1E+06				
	lb/day		3.9E+05				
Dimethyl Phthalate	ug/l		7.8E+07				
	lb/day		9.8E+06				
4,6-Dinitro-2-Methylphenol	ug/l		2.1E+04				
	lb/day		2.6E+03				
2,4-Dinitrophenol	ug/l		3.8E+03				
	lb/day		4.8E+02				
Ethylbenzene	ug/l		3.9E+05				
	lb/day		4.9E+04				
Fluoranthene	ug/l		1.4E+03				
	lb/day		1.8E+02				
Hexachlorocyclo-Pentadiene	ug/l		5.5E+03				
	lb/day		6.9E+02				
Nitrobenzene	ug/l		4.7E+02				
	lb/day		5.9E+01				
Thallium	ug/l		1.9E+02				
	lb/day		2.4E+01				
Toluene	ug/l		8.1E+06				
	lb/day		1.0E+06				
Tributyltin	ug/l		1.3E-01				
	lb/day		2.0E-02				
1,1,1-Trichloroethane	ug/l		5.2E+07				

Constituent	Units	Performance Goals[1]					
		Max Daily	Avg Monthly	Avg Weekly	Instantaneous		6 Month Median
					Min	Max	
	lb/day		6.5E+06				
Acrylonitrile	ug/l		9.6E+00				
	lb/day		1.2E+00				
Aldrin	ug/l		2.1E-03				
	lb/day		2.6E-04				
Benzene	ug/l		5.6E+02				
	lb/day		7.1E+01				
Benzidine	ug/l		6.6E-03				
	lb/day		8.2E+04				
Beryllium	ug/l		3.1E+00				
	lb/day		3.9E-01				
Bis(2-Chloroethyl) Ether	ug/l		4.3E+00				
	lb/day		5.4E-01				
Bis(2-Ethlyhexyl) Phthalate	ug/l		3.3E+02				
	lb/day		4.2E+01				
Carbon Tetrachloride	ug/l		8.6E+01				
	lb/day		1.1E+01				
Chlordanes [8]	ug/l		2.2E+03				
	lb/day		2.7E-04				
Chlorodibromomethane	ug/l		8.2E+02				
	lb/day		1.0E+02				
Chloroform	ug/l		1.2E+04				
	lb/day		1.5E+03				
DDT [9]	ug/l		1.6E-02				
	lb/day		2.0E-03				
1,4-Dichlorobenzene	ug/l		1.7E+03				
	lb/day		2.1E+02				
3,3'-Dichlorobenzidine	ug/l		7.7E-01				
	lb/day		9.7E-02				
1,2-Dichloroethane	ug/l		2.7E+03				
	lb/day		3.3E+02				
1,1-Dichloroethylene	ug/l		8.6E+01				
	lb/day		1.1E+01				
Dichlorobromomethane	ug/l		5.9E+02				
	lb/day		7.4E+01				
Dichloromethane	ug/l		4.3E+04				
	lb/day		5.4E+03				
1,3-Dichloropropene	ug/l		8.5E+02				
	lb/day		1.1E+02				
Dieldrin	ug/l		3.8E-03				
	lb/day		4.8E-04				
2,4-Dinitrotoluene	ug/l		2.5E+02				
	lb/day		3.1E+01				
1,2-Diphenylhydrazine	ug/l		1.5E+01				
	lb/day		1.9E+00				
Halomethanes [10]	ug/l		1.2E+04				
	lb/day		1.5E+03				
Heptachlor	ug/l		4.8E-03				
	lb/day		6.0E-04				

Constituent	Units	Performance Goals[1]					
		Max Daily	Avg Monthly	Avg Weekly	Instantaneous		6 Month Median
					Min	Max	
Heptachlor Epoxide	ug/l		1.9E-03				
	lb/day		2.4E-04				
Hexachlorobenzene	ug/l		2.0E-02				
	lb/day		2.5E-03				
Hexachlorobutadiene	ug/l		1.3E+03				
	lb/day		1.7E+02				
Hexachloroethane	ug/l		2.4E+02				
	lb/day		3.0E+01				
Isophorone	ug/l		7.0E+04				
	lb/day		8.7E+03				
N-Nitrosodimethylamine	ug/l		7.0E+02				
	lb/day		8.7E+01				
N-Nitrosodi-N-Propylamine	ug/l		3.6E+01				
	lb/day		4.5E+00				
N-Nitrosodiphenylamine	ug/l		2.4E+02				
	lb/day		3.0E+01				
PAHs [11]	ug/l		8.4E-01				
	lb/day		1.1E-01				
PCBs [12]	ug/l		1.8E-03				
	lb/day		2.3E-04				
TCDD Equivalents [13]	ug/l		3.7E-07				
	lb/day		4.7E-08				
1,1,2,2-Tetrachloroethane	ug/l		2.2E+02				
	lb/day		2.7E+01				
Tetrachloroethylene	ug/l		1.9E+02				
	lb/day		2.4E+01				
Toxaphene	ug/l		2.0E-01				
	lb/day		2.5E-03				
Trichloroethylene	ug/l		2.6E+03				
	lb/day		3.2E+02				
1,1,2-Trichloroethane	ug/l		9.0E+02				
	lb/day		1.1E+02				
2,4,6-Trichlorophenol	ug/l		2.8E+01				
	lb/day		3.5E+00				
Vinyl Chloride	ug/l		3.4E+03				
	lb/day		4.3E+02				

[1] Scientific "E" notation is used to express certain values. In scientific "E" notation, the number following the "E" indicates the position of the decimal point in the value. Negative numbers after the "E" indicate that the value is less than 1, and positive numbers after the "E" indicate that the value is greater than 1. In this notation a value of 6.1E–02 represents a value of 6.1×10^{-2} or 0.061, 6.1E+2 represents 6.1×10^{2} or 610, and 6.1E+00 represents 6.1×10^{0} or 6.1.

[2] Dischargers may, at their option, meet this limitation (or apply this performance goal) as a total chromium limitation (or performance goal).

[3] If a Discharger can demonstrate to the satisfaction of the Regional Water Board (subject to USEPA approval) that an analytical method is available to reliably distinguish between strongly and weakly complexed cyanide, effluent limitations for cyanide may be met by (or performance goals may be evaluated with) the combined measurement of free cyanide, simple alkali metal cyanides, and weakly complexed organometallic cyanide complexes. In order for the analytical method to be acceptable, the recovery of free cyanide from metal complexes must be comparable to that achieved by the approved method in 40 CFR 136, as revised May 14, 1999.
[4] Chronic toxicity expressed as Chronic Toxicity Units (TUc) = 100 / NOEL, where NOEL (No Observed Effect Level) is expressed as the maximum percent effluent or receiving water that causes no observable effect on a test organism.
[5] HCH (hexachlorocyclohexane) represents the sum of the alpha, beta, gamma (lindane), and delta isomers of hexachlorocyclohexane.
[6] Not to exceed limits specified in Title 17 CCRs, Section 30253, Standards for Protection Against Radiation. Reference to Section 30253 is prospective, including future changes to any incorporated provisions of federal law, as the changes take effect.
[7] Dichlorobenzenes represent the sum of 1,2- and 1,3-dichlorobenzene.
[8] Chlordanes represent the sum of chlordane-alpha, chlordane-gamma, chlordene-alpha, chlordene-gamma, nonachlor-alpha, nonachlor-gamma, and oxychlordane.
[9] DDD (dichlorodiphenyldichloroethane), DDE (dichlorodiphenyldichloroethylene), and DDT (dichlorodiphenyltrichloroethane) represent the sum of 4,4'DDT; 2,4'DDT; 4,4'DDE; 2,4'DDE; 4,4'DDD; and 2,4'DDD.
[10] Halomethanes represent the sum of bromoform, bromomethane (methyl bromide), and chloromethane (methyl chloride).
[11] PAHs (polynuclear aromatic hydrocarbons) represent the sum of acenapthalene, anthracene, 1,2-benzanthracene, 3,4-benzofluoranthene, benzo[k]fluoranthene, 1,1,2-benzoperylene, benzo[a]pyrene, chrysene, dibenzo[ah]anthracene, fluorene, indeno[1,2,3-cd]pyrene, phenanthrene, and pyrene.
[12] PCBs (polychlorinated biphenyls) represent the sum of chlorinated biphenyls whose analytical characteristics resemble those of Aroclor-1016, Aroclor-1221, Aroclor-1232, Aroclor-1242, Aroclor-1248, Aroclor-1254, and Aroclor-1260.
[13] TCDD equivalents represent the sum of concentrations of chlorinated dibenzodioxins (2,3,7,8-CDDs) and chlorinated dibenzofurans (2,3,7,8-CDFs) multiplied by their respective toxicity factors, as shown by the table, below. EPA Method 8280 may be used to analyze TCDD equivalents.

Isomer Group	Toxicity Equivalence Factor
2,3,7,8 - tetra CDD	1.0
2,3,7,8 - penta CDD	0.5
2,3,7,8 - hexa CDD	0.1
2,3,7,8 - hepta CDD	0.01
octa CDD	0.001
2,3,7,8 - tetra CDF	0.1
1,2,3,7,8 - penta CDF	0.05
2,3,4,7,8 - penta CDF	0.5
2,3,7,8 - hexa CDFs	0.1
2,3,7,8 - hepta CDFs	0.01
octa CDF	0.001

[14] Endosulfan shall mean the sum of alpha-endosulfan, beta-endosulfan, and endosulfan sulfate.

V. RECEIVING WATER LIMITATIONS

Unless specifically excepted by this Order, the discharge, by itself or jointly with any other discharge(s), shall not cause violation of the following water quality objectives. Compliance

with these objectives shall be determined by samples collected at stations representative of the area within the waste field where initial dilution is completed.

A. Bacterial Characteristics

1. Within a zone bounded by the shoreline and a distance of 1,000 feet from the shoreline or the 30-foot depth contour, whichever is further from the shoreline, and in areas outside this zone used for water contact sports, as determined by the Regional Water Board, but including all kelp beds, the following bacterial objectives shall be maintained throughout the water column.

    a. 30-day Geometric Mean – The following standards are based on the geometric mean of the five most recent samples from each site:

        1) Total coliform density shall not exceed 1,000 per 100 ml;

        2) Fecal coliform density shall not exceed 200 per 100 ml; and

        3) Enterococcus density shall not exceed 35 per 100ml.

    b. Single Sample Maximum:

        1) Total coliform density shall not exceed 10,000 per 100 ml;

        2) Fecal coliform density shall not exceed 400 per 100ml;

        3) Enterococcus density shall not exceed 104 per 100 ml; and

        4) Total coliform density shall not exceed 1,000 per 100 ml when the fecal coliform/total coliform ratio exceeds 0.1.

2. The Initial Dilution Zone for any wastewater outfall shall be excluded from designation as kelp beds for purposes of bacterial standards. Adventitious assemblages of kelp plants on waste discharge structures (e.g., outfall pipes and diffusers) do not constitute kelp beds for purposes of bacterial standards.

3. At all areas where shellfish may be harvested for human consumption, as determined by the Regional Water Board, the median total coliform density shall not exceed 70 per 100 ml throughout the water column, and not more than 10 percent of the samples shall exceed 230 per 100 ml.

B. Chemical Characteristics

1. The dissolved oxygen concentration shall not at any time be depressed more than 10 percent from that which occurs naturally, as the result of the discharge of oxygen demanding waste materials.

2. The pH shall not be changed at any time more than 0.2 units from that which occurs naturally.

3. The dissolved sulfide concentration of waters in and near sediments shall not be significantly increased above that present under natural conditions.

4. The concentration of substances set forth in Chapter II, Table B of the 2005 California Ocean Plan, shall not be increased in marine sediments to levels that would degrade indigenous biota.

5. The concentration of organic materials in marine sediments shall not be increased to levels that would degrade marine life.

6. Nutrient materials shall not cause objectionable aquatic growths or degrade indigenous biota.

C. Biological Characteristics

1. Marine communities, including vertebrate, invertebrate, and plant species, shall not be degraded.

2. The natural taste, odor, and color of fish, shellfish, or other marine resources used for human consumption shall not be altered.

3. The concentration of organic materials in fish, shellfish, or other marine resources used for human consumption shall not bioaccumulate to levels that are harmful to human health.

D. Radioactivity

Discharge of radioactive waste shall not degrade marine life.

VI. PROVISIONS

A. Standard Provisions

1. **Federal Standard Provisions.** The Discharger shall comply with all Standard Provisions included in Attachment D of this Order.

2. **Regional Water Board Standard Provisions.** The Discharger shall comply with the following provisions:

   a. The Discharger shall comply with all requirements and conditions of this Order. Any permit noncompliance constitutes a violation of the CWA and/or the CWC and is grounds for enforcement action, permit termination, revocation and

reissuance, or modification, or for denial of an application for permit renewal, modification, or reissuance.

b. The Discharger shall comply with all applicable federal, state, and local laws and regulations that pertain to sewage sludge handling, treatment, use, and disposal, including CWA Section 405 and USEPA regulations at 40 CFR Part 257.

c. The Discharger's wastewater treatment facilities shall be supervised and operated by persons possessing certificates of appropriate grade pursuant to Title 23, Division 3, Chapter 26 of the California Code of Regulations (CCRs).

d. All proposed new treatment facilities and expansions of existing treatment facilities shall be completely constructed and operable prior to initiation of the discharge from the new or expanded facilities. The Discharger shall submit a certification report for each new treatment facility, expansion of an existing treatment facility, and re-rating of an existing treatment facility. For new treatment facilities and expansions, the certification report shall be prepared by the design engineer. For re-ratings, the certification report shall be prepared by the engineer who evaluated the treatment facility capacity. The certification report shall:

1) Identify the design capacity of the treatment facility, including the daily and 30-day design capacity,

2) Certify the adequacy of each component of the treatment facility, and

3) Contain a requirement-by-requirement analysis, based on acceptable engineering practices, of the process and physical design of the facility to ensure compliance with this Order.

The signature and engineering license number of the engineer preparing the certification report shall be affixed to the report. If reasonable, the certification report shall be submitted prior to beginning construction. The Discharger shall not initiate a discharge from an existing treatment facility at a daily flow rate in excess of its previously approved design capacity until:

1) The certification report is received by the Executive Officer,

2) The Executive Officer has received written notification of completion of construction (new treatment facilities and expansions only),

3) An inspection of the facility has been made by staff of the Regional Water Board (new treatment facilities and expansions only), and

4) The Executive Officer has provided the Discharger with written authorization to discharge at a daily flow rate in excess of its previously approved design capacity.

e. All waste treatment, containment, and disposal facilities shall be protected against 100-year peak stream flows as defined by the San Diego County flood control agency.

f. All waste treatment, containment, and disposal facilities shall be protected against erosion, overland runoff, and other impacts resulting from a 100-year, 24-hour storm event.

g. This Order expires on August 1, 2011, after which, the terms and conditions of this permit are automatically continued pending issuance of a new permit, provided that all requirements of USEPA's NPDES regulations at 40 CFR 122.6 and the State's regulations at CCR Title 23, Section 2235.4 regarding the continuation of expired permits and waste discharge requirements are met.

h. The Discharger's wastewater treatment facilities shall be operated and maintained in accordance with the operations and maintenance manual prepared by the Discharger pursuant to the Clean Water Grant Program.

i. A copy of this Order shall be posted at a prominent location at or near the treatment and disposal facilities and shall be available to operating personnel at all times.

j. The Discharger shall comply with any interim limitations established by addendum, enforcement action, or revised waste discharge requirements that have been or may be adopted by the Regional Water Board.

k. The Discharger shall comply with effluent standards and prohibitions for toxic pollutants established pursuant to Section 307 (a) of the CWA within the time frame set forth by the regulations that establish those standards and prohibitions, even if this Order has not been modified to incorporate the requirements. If an applicable effluent standard or prohibition, including any schedule of compliance, is promulgated pursuant to Section 307 (d) of the CWA for a toxic pollutant, and that standard or prohibition is more stringent than a limitation contained in this Order, the Executive Officer may institute proceedings to modify or revoke and reissue the Order to conform to the effluent standard or prohibition.

B. Monitoring and Reporting Program Requirements

The Discharger shall comply with the Monitoring and Reporting Program (Attachment E) of this Order.

C. Special Provisions

1. Re-opener Provisions

b. This Order may be modified, revoked and reissued, or terminated for cause including, but not limited to, the following:

1) Violation of any terms or conditions of this Order.

2) Obtaining this Order by misrepresentation or failure to disclose fully all relevant facts, or

3) A change in any condition that requires either a temporary or permanent reduction or elimination of the authorized discharge.

The filing of a request by the Discharger for modifications, revocation and reissuance, or termination of this Order does not stay any condition of this Order. Notification by the Discharger of planned operational or facility changes, or anticipated noncompliance with this Order does not stay any condition of this Order.

c. If any applicable toxic effluent standard or prohibition (including any schedule of compliance specified in such effluent standard or prohibition) is promulgated under Section 307(a) of the CWA for a toxic pollutant and that standard or prohibition is more stringent than any limitation on the pollutant in this Order, the Regional Water Board may institute proceedings under these regulations to modify or revoke and reissue the Order to conform to the toxic effluent standard or prohibition.

d. This Order may be re-opened and modified, to incorporate in accordance with the provisions set forth in 40 CFR Parts 122 and 124, to include requirements for the implementation of the watershed management approach.

e. This Order may be reopened and modified, in accordance with the provisions set forth in 40 CFR Parts 122 and 124, to include new Minimum Levels (MLs).

f. This Order may be re-opened and modified to revise effluent limitations as a result of future Basin Plan Amendments, or the adoption of a total maximum daily load allocation (TMDL) for the receiving water.

g. This Order may be re-opened upon submission by the Discharger of adequate information, as determined by this Regional Water Board, to provide for dilution credits or a mixing zone, as may be appropriate.

h. This Order may be re-opened and modified to revise the toxicity language once that language becomes standardized.

i. This Order may also be re-opened and modified, revoked and, reissued or terminated in accordance with the provisions of 40 CFR sections 122.44, 122.62 to 122.64, 125.62, and 125.64. Causes for taking such actions include, but are not limited to, failure to comply with any condition of this Order and permit, and endangerment to human health or the environment resulting from the permitted activity.

2. Special Studies, Technical Reports, and Additional Monitoring Requirements

a. Treatment Plant Capacity

The Discharger shall submit a written report to the Executive Officer within 90 days after the monthly average influent flow rate equals or exceeds 75 percent of the design secondary treatment capacity of the wastewater treatment and/or disposal facilities. The Discharger's senior administrative officer shall sign a letter in accordance with Standard Provision V.B.2.a (Attachment D) which transmits that report and certifies that the policy-making body is adequately informed of the influent flow rate relative to the Facility's design capacity. The report shall include the following:

1) Average influent daily flow for the calendar month; the date on which the maximum daily flow occurred; and the rate of that maximum flow.

2) The Discharger's best estimate of when the average daily influent flow for a calendar month will equal or exceed the design capacity of the facilities.

3) The Discharger's intended schedule for studies, design, and other steps needed to provide additional capacity for the waste treatment and/or disposal facilities, and/or control the flow rate before the waste flow exceeds the capacity of present units.

b. Spill Reporting Requirements

For purposes of this section, a spill is a discharge of treated or untreated wastewater that occurs at or downstream of the SBWRP headworks in violation of Discharge Prohibition A of this Order, or a discharge of other materials related to treatment and operations of the SBWRP that occurs anywhere throughout the collection and treatment system owned and/or operated by the Discharger. This section does not include sanitary sewer overflows reportable under separate

waste discharge requirements. The Discharger shall report spills in accordance with the following procedures:

1) If a spill results in a discharge of treated or untreated wastewater that is greater than 1,000 gallons that reaches surface waters, the Discharger shall:

   a) Report the spill to the Regional Water Board by telephone, by voice mail, or by FAX within 24 hours from the time the Discharger becomes aware of the spill. The Discharger shall inform the Regional Water Board of the date of the spill, spill location and its final destination, time the spill began and ended, estimated total spill volume, and type of spill material.

   b) Submit a written report, as well as any additional pertinent information, to the Regional Water Board no later than five days following the starting date of the spill event. The Discharger shall submit the written report using the Sanitary Sewer Overflow Report Form (June 13, 2001) provided under Regional Water Board Order No. 96-04.

2) If a spill results in a discharge of treated or untreated wastewater under 1,000 gallons and the discharge does not reach surface waters:

   a) The Discharger is not required to notify the Regional Water Board within 24 hours.

   b) The Discharger shall submit a written report, as well as any additional pertinent information, in the monthly self-monitoring report for the month in which the spill occurred. The Discharger shall submit the written report using the Sanitary Sewer Overflow Report Form (June 13, 2001) provided under Regional Water Board Order No. 96-04.

3) For spills of material other than treated or untreated wastewater that cause, may cause, or are caused by significant operational failure, or endangers or may endanger human health or the environment, the Discharger shall notify the Regional Water Board by telephone, by voice mail, or by FAX within 24 hours from the time the Discharger becomes aware of the spill. The Discharger shall inform the Regional Water Board of the date of the spill, spill location and its final destination, time the spill began and ended, estimated total spill volume, and type of spill material.

4) For all spills, the Discharger shall submit an annual summary containing the following information for each spill: date of spill, location of spill and its final destination, time the spill began and ended, estimated total spill volume, and type of spill material.

5) The spill reporting requirements contained in this Order do not relieve the Discharger of responsibilities to report to other agencies, such as the Office of

Emergency Services and the County of San Diego Department of Environmental Health Services.

c. Spill Reporting Requirements

A sanitary sewer system is a wastewater collection system including sewers, pipes, pumps, or other conveyances that convey wastewater (domestic, commercial, and industrial wastewaters) to a wastewater treatment plant. A sanitary sewer system is part of the POTW, and all federal Standard Provisions of this Order apply to a sanitary sewer system. A sanitary sewer overflow is each instance of a discharge from a sanitary sewer system at any point upstream of the headworks of a wastewater treatment plant. Temporary storage and conveyance facilities (such as wet wells, impoundments, tanks, highlines, etc.) are part of the sanitary sewer system and are not sanitary sewer overflows provided that sewage from these facilities is not discharged to waters of the State.

The Discharger shall report sanitary sewer overflows from the sanitary sewer system owned and operated by the Discharger in accordance with Monitoring and Reporting Program No. 96-04, Sanitary Sewer Overflow Reporting Procedures for Sewage Collection Agencies, incorporated by reference into this Order.

d. Sludge (Biosolids) Disposal Requirements

1) The handling, treatment, use, management, and disposal of sludge and solids derived from wastewater treatment must comply with applicable provisions of CWA section 405 and USEPA regulations at 40 CFR parts 257, 258, 501, and 503, including all monitoring, record keeping, and reporting requirements.

2) Sludge and wastewater solids must be disposed of in a municipal solid waste landfill, reused by land application, or disposed of in a sludge-only landfill in accordance with 40 CFR Parts 258 and 503 and Title 23, Chapter 15 of the CCRs. If the Discharger desires to dispose of solids and/or sludge in a different manner, a request for permit modification must be submitted to the USEPA and to this Regional Water Board at least 180 days prior to beginning the alternative means of disposal.

3) Sludge that is disposed of in a municipal solid waste landfill must meet the requirements of 40 CFR 25 pertaining to providing information to the public. In the annual self-monitoring report, the Discharger shall include the amount of sludge placed in the landfill as well as the landfill to which it was sent.

4) All requirements of 40 CFR 503 and 23 CCR Chapter 15 are enforceable whether or not the requirements of those regulations are stated in an NPDES permit or any other permit issued to the Discharger.

5) The Discharger shall take all reasonable steps to prevent and minimize any sludge use or disposal in violation of this Order that has a likelihood of adversely affecting human health or the environment.

6) Solids and sludge treatment, storage, and disposal or reuse shall not create a nuisance, such as objectionable odors or flies, and shall not result in groundwater contamination.

7) The solids and sludge treatment and storage site shall have adequate facilities to divert surface water runoff from adjacent areas to protect the boundaries of the site from erosion, and to prevent drainage from the treatment and storage site. Adequate protection is defined as protection, at the minimum, from a 100-year storm and protection from the highest possible tidal stage that may occur.

8) The discharge of sewage sludge and solids shall not cause waste material to be in a position where it is, or can be, conveyed from the treatment and storage sites and deposited in waters of the State.

9) The Discharger shall submit an annual report to the USEPA and the Regional Water Board containing monitoring results and pathogen and vector attraction reduction requirements, as specified by 40 CFR 503. The Discharger shall also report the quantity of sludge removed from the Facility and the disposal method. This self-monitoring report shall be postmarked by February 19 of each year and report for the period of the previous calendar year.

e. Pretreatment Program

1) The Discharger shall be responsible for the performance of all pretreatment requirements contained in 40 CFR Part 403, including any subsequent revisions to that part. Where 40 CFR Part 403 or subsequent revisions place mandatory actions upon the Discharger but do not specify a timetable for completion, the Discharger shall complete the mandatory actions within 6 months of the issuance date of this Order, or the effective date of the revisions to 40 CFR Part 403, whichever is later. For violations of pretreatment requirements, the Discharger shall be subject to enforcement actions, penalties, fines, and other remedies imposed by the USEPA and/or the Regional Water Board, as provided in the CWA and/or the CWC.

2) The Discharger shall implement and enforce its approved pretreatment program, and all subsequent revisions, which are hereby made enforceable conditions of this Order. The Discharger shall enforce the requirements promulgated pursuant to Sections 307 (b), 307 (c), 307 (d), and 402 (b) of the CWA with timely, appropriate, and effective enforcement actions. The Discharger shall cause industrial users subject to federal categorical

standards to achieve compliance no later than the date specified in those requirements, or in the case of a new industrial user, upon commencement of the discharge.

3) The Discharger shall perform the pretreatment functions required by 40 CFR 403, including, but not limited to:

   a) Implement the necessary legal authorities as required by 40 CFR 403.8 (f) (1)

   b) Enforce the pretreatment requirements under 40 CFR 403.5 and 403.6;

   c) Implement the programmatic functions as required by 40 CFR 403.8 (f) (2); and

   d) Provide the requisite funding and personnel to implement the pretreatment program, as required by 40 CFR 403.8 (f) (3).

4) By April 1 of each year, the Discharger shall submit an annual report to the Regional Water Board; USEPA Region 9; the State Water Board, Division of Water Quality, Regulations Unit; and the San Diego County Department of Health Services, Hazardous Materials Division, describing its pretreatment activities over the previous calendar year. In the event the Discharger is not in compliance with any condition or requirement of this Order, or any pretreatment compliance inspection/audit requirements, the Discharger shall include the reasons for noncompliance and state how and when it will comply with such conditions and requirements. The annual report shall contain, but not be limited to, the following information:

   a) A summary of analytical results from representative flow-proportioned 24-hour composite sampling of the Discharger's influent and effluent for those pollutants known or suspected to be discharged by industrial users that the USEPA has identified under Section 307 (d) of the CWA, which are known or suspected to be discharged by industrial users. This will consist of an annual full priority pollutant scan. Wastewater sampling and analysis shall be performed in accordance with the minimum frequency of analysis required by the Monitoring and Reporting program of this Order (Attachment E). The Discharger shall also provide influent and effluent monitoring data for non-priority pollutants, which the Discharger believes may be causing or contributing to interference or pass through. The Discharger is not required to sample and analyze for asbestos. Sludge sampling and analysis is addressed in MRP No. R9-2006-0067. Wastewater sampling and analysis shall be performed in accordance with 40 CFR Part 136;

   b) A discussion of upset, interference, or pass through, if any, at the Discharger's Facilities, which the Discharger knows or suspects were

caused by industrial users. The discussion shall include the reasons why the incidents occurred, any corrective actions taken, and, if known, the name and address of the responsible industrial user(s). The discussion shall also include a review of the applicable local pollutant limitations to determine whether any additional limitations or changes to existing limitations, are necessary to prevent pass-through, interference, or noncompliance with sludge disposal requirements;

c) The Discharger shall characterize the compliance status of each significant industrial user (SIU) by providing a list or table for the following:

(1) Name of SIU and category, if subject to categorical standards;

(2) Type of wastewater treatment or control processes in place;

(3) Number of samples taken by SIU during the year;

(4) Number of samples and inspections by Discharger during the year;

(5) For an SIU subject to discharge requirements for total toxic organics (TTO), whether all required certifications were provided;

(6) A list of pretreatment standards (categorical or local) violated during the year, or any other violations;

(7) Industries in significant noncompliance as defined at 40 CFR 403.12 (f) (2) (vii), at any time during the year;

(8) A summary of enforcement actions or any other actions taken against SIUs during the year. Describe the type of action, final compliance date, and the amount of fines and/or penalties collected, if any. Describe any proposed actions for bringing SIUs into compliance; and

(9) The name(s) of any SIU(s) required to submit a baseline monitoring report and any SIUs currently discharging under a baseline monitoring report.

d) A brief description of any programs the Discharger implements to reduce pollutants from industrial users not classified as SIUs;

e) A brief description of any significant changes in operating the pretreatment program that differ from the previous year, including, but not limited to, changes in the program's administrative structure, local limits, monitoring program, legal authority, enforcement policy, funding, and staffing levels;

f) A summary of the annual pretreatment program budget, including the cost of pretreatment program functions and equipment purchases;

g) A summary of activities to involve and inform the public of the pretreatment program, including a copy of the newspaper notice, if any, required by 40 CFR 403.8 (f) (2) (vii);

h) A description of any changes in sludge disposal methods; and

i) A discussion of any concerns not described elsewhere in the annual report.

5) The Discharger shall submit a semiannual SIU compliance status report to the Regional Water Board, the State Water Board, and the USEPA. The reports shall cover the periods of January 1 through June 30, and July 1 through December 31 and shall be submitted no later than September 1 and March 1, respectively. The report shall identify:

a) The names and addresses of all SIUs which violated any discharge or reporting requirements during the semi-annual reporting period;

b) A description of the violations, including whether the discharge violations were for categorical standards or local limits;

c) A description of the enforcement actions or other actions taken to remedy the noncompliance; and

d) The status of enforcement actions or other actions taken in response to SIU noncompliance identified in previous reports.

6) The Discharger shall continue with its implementation of a Non-Industrial Source Control Program, consisting of a public education program designed to minimize the introduction of non-industrial toxic pollutants and pesticides into the sanitary sewer system. The Program shall be reviewed periodically and addressed in the annual report.

3. Bypass of Treatment Facilities

a. Bypass not Exceeding Limitations

The Discharger may allow any bypass to occur which does not cause effluent limitations of this Order or the concentrations of pollutants set forth in 2005 California Ocean Plan Table A and Table B to be exceeded, but only if it also is for essential maintenance to assure efficient operation.

b. Notice

1) Anticipated bypass. If the Discharger knows in advance of the need for a bypass, it shall submit prior notice, if possible, at least ten days before the date of the bypass.

2) Unanticipated bypass. The Discharger shall submit notice of an unanticipated bypass as required in Part I.G.5 of Attachment D – Standard Provisions.

c. Prohibition of Bypass

1) Bypass is prohibited and the Regional Water Board may take enforcement action against the Discharger for bypass, unless:

a) Bypass was unavoidable to prevent loss of life, personal injury, or severe property damage;

b) There were no feasible alternatives to the bypass, such as the use of auxiliary treatment facilities, retention of untreated wastes, or maintenance during normal periods of equipment downtime. This condition is not satisfied if adequate back-up equipment should have been installed in the exercise of reasonable engineering judgment to prevent a bypass which occurred during normal periods of equipment downtime or preventative maintenance; and

c) The Discharger submitted notices as required under Part VI.C.3.b of this Order.

2) The Executive Officer may approve an anticipated bypass, after considering its adverse effect, if the Executive Officer determines that it will meet the three conditions listed in part VI.C.3.c.1 of this Order.

4. Sewer Overflow Prevention Plan (SPP)

The Discharger shall maintain a Sewer Overflow Prevention Plan (SPP) in an up-to-date condition and shall amend the SPP whenever there is a change (e.g. in the design, construction, operation, or maintenance of the sewerage system or sewerage facilities) which materially affects the potential for sewer overflows. The Discharger shall review and amend the SPP as appropriate after each sewer overflow from the service areas of the SBWRP. The SPP and any amendments thereto, shall be subject to the approval of the Executive Officer and shall be modified as directed by the Executive Officer upon request of the Executive Officer. The Discharger shall ensure that the up-to-date SPP is readily available to sewerage system personnel at all times and that sewerage system personnel are familiar with it.

5. Sewer Overflow Response Plan (SRP)

   The Discharger shall maintain a Sewer Overflow Response Plan (SRP) for the SBWRP. The SRP shall establish procedures for responding to sewer overflows so as to (a) minimize the sewer overflow volume that enters surface waters, and (b) minimize the adverse effects of sewer overflows on water quality and beneficial uses. The Discharger shall maintain the SRP in an up-to-date condition and shall amend the SRP as necessary to accomplish these objectives. The Discharger shall review and amend the SRP as appropriate after each sewer overflow. The SRP, and any amendments thereto, shall be subject to the approval of the Executive Officer and shall be modified as directed by the Executive Officer upon request of the Executive Officer. The Discharger shall ensure that the up-to-date SRP is readily available to sewerage system personnel at all times and that sewerage system personnel are familiar with it.

6. Discharges of Storm Water

   Sewage treatment works with a design flow of 1.0 MGD or greater are required to comply with Water Quality Order No. 97-03-DWQ (NPDES General Permit No. CAS000001), Waste Discharge Requirements for Discharges of Storm Water Associated with Industrial Activity, Excluding Construction Activities. The Discharger shall file a Notice of Intent within 60 days of adoption of this Order (unless already submitted under the previous Order) and comply with Order No. 97-03-DWQ or the Discharger shall provide certification to the Regional Water Board that all storm water is captured and treated on-site and no storm water is discharged or allowed to run off-site from the facility.

VII. COMPLIANCE DETERMINATION

Compliance with the effluent limitations contained in Section IV of this Order will be determined as specified below:

A. Compliance with Average Monthly Effluent Limitation (AMEL).
If the average of daily discharges over a calendar month exceeds the AMEL for a given parameter, an alleged violation will be flagged and the Discharger will be considered out of compliance for each day of that month for that parameter (e.g., resulting in 31 days of noncompliance in a 31-day month). The average of daily discharges over the calendar month that exceeds the AMEL for a parameter will be considered out of compliance for that month only. If only a single sample is taken during the calendar month and the analytical result for that sample exceeds the AMEL, the Discharger will be considered out of compliance for that calendar month. For any one calendar month during which no sample (daily discharge) is taken, no compliance determination can be made for that calendar month.

B. Compliance with Average Weekly Effluent Limitation (AWEL).
If the average of daily discharges over a calendar week (Sunday through Saturday) exceeds the AWEL for a given parameter, an alleged violation will be flagged and the Discharger will be considered out of compliance for each day of that week for that parameter, resulting in 7 days of noncompliance. The average of daily discharges over the calendar week that exceeds the AWEL for a parameter will be considered out of compliance for that week only. If only a single sample is taken during the calendar week and the analytical result for that sample exceeds the AWEL, the Discharger will be considered out of compliance for that calendar week. For any one calendar week during which no sample (daily discharge) is taken, no compliance determination can be made for that calendar week.

C. Compliance with Maximum Daily Effluent Limitation (MDEL).
The MDEL shall apply to flow weighted 24-hour composite samples. If a daily discharge exceeds the MDEL for a given parameter, an alleged violation will be flagged and the Discharger will be considered out of compliance for that parameter for that one day only within the reporting period. For any one day during which no sample is taken, no compliance determination can be made for that day.

D. Compliance with Instantaneous Minimum Effluent Limitation.
The instantaneous minimum effluent concentration limitation shall apply to grab sample determinations. If the analytical result of a single grab sample is lower than the instantaneous minimum effluent limitation for a parameter, a violation will be flagged and the Discharger will be considered out of compliance for that parameter for that single sample. Non-compliance for each sample will be considered separately (e.g., the results of two grab samples taken within a calendar day that both are lower than the instantaneous minimum effluent limitation would result in two instances of noncompliance with the instantaneous minimum effluent limitation).

E. Compliance with Instantaneous Maximum Effluent Limitation.
The instantaneous maximum effluent concentration limitation shall apply to grab sample determinations. If the analytical result of a single grab sample is higher than the instantaneous maximum effluent limitation for a parameter, a violation will be flagged and the Discharger will be considered out of compliance for that parameter for that single sample. Non-compliance for each sample will be considered separately (e.g., the results of two grab samples taken within a calendar day that both exceed the instantaneous maximum effluent limitation would result in two instances of noncompliance with the instantaneous maximum effluent limitation).

F. Compliance with Six-month Median Effluent Limitation.
If the median of daily discharges over any 180-day period exceeds the six-month median effluent limitation for a given parameter, an alleged violation will be flagged and the Discharger will be considered out of compliance for each day of that 180-day period for that parameter. The next assessment of compliance will occur after the next sample is taken. If only a single sample is taken during a given 180-day period and the analytical result for that sample exceeds the six-month median, the Discharger will be

considered out of compliance for the 180-day period. For any 180-period during which no sample is taken, no compliance determination can be made for the six-month median limitation.

G. Mass and Concentration Limitations.

Compliance with mass and concentration effluent limitations for the same parameter shall be determined separately with their respective limitations. When the concentration of a constituent in an effluent sample is determined to be "ND" or "DNQ", the corresponding mass emission rate (MER) determined from that sample concentration shall also be reported as "ND" or "DNQ."

H. Percent Removal.

Compliance with the secondary treatment standard for monthly average percent removal of biochemical oxygen demand, carbonaceous biochemical oxygen demand, and total suspended solids pursuant to 40 CFR Part 133 shall be determined separately for each wastewater treatment facility discharging through an outfall. For each wastewater treatment facility, the monthly average percent removal is the average of the calculated daily discharge percent removals only for days on which the constituent concentration is monitored in both the influent and effluent of the wastewater treatment facility at locations specified in the Monitoring and Reporting Program (Attachment E) within a calendar month.

The percent removal for each day shall be calculated according to the following equation:

$$\text{Daily discharge percent removal} = \frac{\textit{Influent concentration} - \textit{Effluent concentration}}{\textit{Influent concentration}} \; x\, 100\%$$

I. 2005 California Ocean Plan Provisions for Table B Constituents.

1. Sampling Reporting Protocols

   a. Dischargers must report with each sample result the reported ML and the laboratory's current Method Detection Limit (MDL).

   b. Dischargers must also report the results of analytical determinations for the presence of chemical constituents in a sample using the following reporting protocols:

      1) Sample results greater than or equal to the reported ML must be reported "as measured" by the laboratory (i.e., the measured chemical concentration in the sample).

      2) Sample results less than the reported ML, but greater than or equal to the laboratory's MDL, must be reported as "Detected, but Not Quantified", or DNQ. The laboratory must write the estimated chemical concentration of the

sample next to DNQ as well as the words "Estimated Concentration" (may be shortened to "Est. Conc.").

3) Sample results less than the laboratory's MDL must be reported as "Not Detected", or ND.

2. Compliance Determination

Sufficient sampling and analysis shall be required to determine compliance with the effluent limitation.

a. Compliance with Single-Constituent Effluent Limitations
The Discharger shall be deemed out of compliance with an effluent limitation or discharge specification if the concentration of the constituent in the monitoring sample is greater than the effluent limitation or discharge specification and greater than or equal to the ML.

b. Compliance with Effluent Limitations expressed as a Sum of Several Constituents

Dischargers are out of compliance with an effluent limitation that applies to the sum of a group of chemicals (e.g., PCBs) if the sum of the individual pollutant concentrations is greater than the effluent limitation. Individual pollutants of the group will be considered to have a concentration of zero if the constituent is reported as ND or DNQ.

c. Multiple Sample Data Reduction

The concentration of the pollutant in the effluent may be estimated from the result of a single sample analysis or by a measure of central tendency (arithmetic mean, geometric mean, median, etc.) of multiple sample analyses when all sample results are quantifiable (i.e., greater than or equal to the reported ML). When one or more sample results are reported as ND or DNQ, the central tendency concentration of the pollutant shall be the median (middle) value of the multiple samples. If, in an even number of samples, one or both of the middle values is ND or DNQ, the median will be the lower of the two middle values.

3. Pollutant Minimization Program

a. Pollutant Minimization Program Goal

The goal of the Pollutant Minimization Program is to reduce all potential sources of a pollutant through pollutant minimization (control) strategies, including pollution prevention measures, in order to maintain the effluent concentration at or below the effluent limitation. Pollution prevention measures may be particularly appropriate for persistent bioaccumulative priority pollutants where

there is evidence that beneficial uses are being impacted. The completion and implementation of a Pollution Prevention Plan, required in accordance with California Water Code (CWC) Section 13263.3 (d) will fulfill the Pollution Minimization Program requirements in this section.

b. Determining the need for a Pollutant Minimization Program

1) The Discharger must develop and conduct a Pollutant Minimization Program if all of the following conditions are true:

a) The calculated effluent limitation is less than the reported ML.

b) The concentration of the pollutant is reported as DNQ.

c) There is evidence showing that the pollutant is present in the effluent above the calculated effluent limitation.

2) Alternatively, the Discharger must develop and conduct a Pollutant Minimization Program if all of the following conditions are true:

a) The calculated effluent limitation is less than the MDL.

b) The concentration of the pollutant is reported as ND.

c) There is evidence showing that the pollutant is present in the effluent above the calculated effluent limitation.

c. Regional Water Board may include special provisions in the discharge requirements to require the gathering of evidence to determine whether the pollutant is present in the effluent at levels above the calculated effluent limitation. Examples of evidence may include:

1) Health advisories for fish consumption.

2) Presence of whole effluent toxicity.

3) Results of benthic or aquatic organism tissue sampling.

4) Sample results from analytical methods more sensitive than methods included in the permit.

5) The concentration of the pollutant is reported as DNQ and the effluent limitation is less than the MDL.

c. Elements of a Pollutant Minimization Program

The Regional Board may consider cost-effectiveness when establishing the requirements of a Pollutant Minimization Program. The program shall include actions and submittals acceptable to the Regional Board including, but not limited to, the following:

1) An annual review and semi-annual monitoring of potential sources of the reportable pollutant, which may include fish tissue monitoring and other biouptake sampling;

2) Quarterly monitoring for the reportable pollutant in the influent to the wastewater treatment system;

3) Submittal of a control strategy designed to proceed toward the goal of maintaining concentrations of the reportable pollutant in the effluent at or below the calculated effluent limitation;

4) Implementation of appropriate cost-effective control measures for the pollutant, consistent with the control strategy; and,

5) An annual status report that shall be sent to the Regional Board including:

(a) All Pollutant Minimization Program monitoring results for the previous year;

(b) A list of potential sources of the reportable pollutant;

(c) A summary of all action taken in accordance with the control strategy; and,

(d) A description of actions to be taken in the following year.

J. Acute Toxicity.

Compliance with the Acute Toxicity Performance Goals for Outfall 001 (Section IV.B.3 of this Order) shall be determined using an established protocol, e.g., COP 2005, American Society for Testing Materials (ASTM), USEPA, American Public Health Association, or State Board. Acute Toxicity shall be expressed in Toxic Units Acute (TUa), where:

$$TUa = 100 / 96\text{-hr } LC_{50}$$

and where LC_{50} is the Lethal Concentration 50%; the percent waste giving 50% survival of test organisms. LC_{50} shall be determined by static or continuous flow bioassay techniques using standard test species. If specific identifiable substances in wastewater can be demonstrated by the discharger as being rapidly rendered harmless upon discharge to the marine environment, but not as a result of dilution,

the LC_{50} may be determined after the test samples are adjusted to remove the influence of those substances.

When it is not possible to measure the 96-hour LC_{50} due to greater than 50% survival of the test species in 100% waste, the toxicity concentration shall be calculated by the following:

$$TUa = \log (100-S) / 1.7$$

where S is the percent survival in 100% waste. If S > 99, TUa shall be reported as zero.

K. Chronic Toxicity.

Chronic toxicity is used to measure the acceptability of waters for supporting a healthy marine biota. Potential to exceed the Chronic Toxicity performance goal established in Section IV.B.3 of this Order for Outfall 001 shall be determined using critical life stage toxicity tests in accordance with procedures prescribed by the 2005 California Ocean Plan and restated in MRP No. R9-2006-0067. Chronic Toxicity shall be expressed as Toxic Units Chronic (TUc), where:

$$TUc = 100 / NOEL$$

where NOEL is the No Observed Effect Level and is expressed as the maximum percent of effluent that causes no observable effect on a test organism, as determined by the result of a critical life stage toxicity test

If the toxicity testing result shows an exceedance of the acute toxicity or chronic toxicity performance goal for Outfall 001 specified in Section IV.B.3 of this Order, the Discharger shall:

1. Take all reasonable measures necessary to immediately minimize toxicity; and

2. Increase the frequency of the toxicity test(s) that showed a violation to at least two times per month until the results of at least two consecutive toxicity tests do not show violations.

The additional toxicity tests will be incorporated into the monthly discharge monitoring report within one month after the completion of the accelerated monitoring and submitted to the Regional Water Board pursuant to Attachment E – Monitoring and Reporting Program.

If the additional tests indicate that toxicity effluent limitations are being consistently violated (at least three exceedances out of six tests), the Discharger shall conduct a Toxicity Reduction Evaluation (TRE) and a Toxic Identification Evaluation (TIE). Once the source of toxicity is identified, the Discharger shall take all reasonable steps to reduce the toxicity to meet the toxicity limitations identified in Section IV.B of this Order.

Within 30 days of completion of the TRE/TIE, the Discharger shall submit the results of the TRE/TIE, including a summary of the findings, data generated, a list of corrective actions necessary to achieve consistent compliance with all the toxicity limitation of this Order and prevent recurrence of violations of those limitation, and a time schedule for implementation of such corrective actions. The corrective actions and time schedule shall be modified at the direction of the Executive Officer.

L. Toxicity Reduction Evaluation (TRE)

The Discharger shall develop a TRE workplan in accordance with the TRE procedures established by the USEPA in the following guidance manuals:

1. Generalized Methodology for Conducting Industrial Toxicity Reduction Evaluations (EPA/600/2-88/070).

2. Toxicity Identification Evaluation, Phase I (EPA/600/6-91/005F).

3. Methods for Aquatic Toxicity Identification Evaluations, Phase II (EPA/600/R-92/080).

4. Methods for Aquatic Toxicity Identification Evaluations, Phase III (EPA/600/R-92/081).

The Discharger shall submit the TRE workplan to the Regional Water Board within 180 days of the adoption of this Order. The TRE workplan shall be subject to the approval of the Regional Water Board and shall be modified as directed by the Regional Water Board.

M. Mass Emission Rate.

The mass emission rate (MER), in pounds per day, shall be obtained from the following calculation for any calendar day:

$$\text{Mass Emission Rate (lb/day)} = 8.34 \times Q \times C$$

in which Q and C are the flow rate in gallons/day and the constituent concentration in mg/L, respectively, and 8.34 is a conversion factor (pounds [lb]/gallon of water). If a composite sample is taken, then C is the concentration measured in the composite sample and Q is the average flow rate occurring during the period over which the samples are composited.

N. Bacterial Standards and Analysis.

1. The geometric mean used for determining compliance with bacterial standards is calculated with the following equation:

$$\text{Geometric Mean} = (C_1 \times C_2 \times \ldots \times C_n)^{1/n}$$

where n is the number of days samples were collected during the period and C is the concentration of bacteria (CFU/100 mL) found on each day of sampling.

2. For all bacterial analyses, sample dilutions should be performed so the range of values extends from 2 to 16,000 CFU (colony-forming units). The detection methods used for each analysis shall be reported with the results of the analysis. Detection methods used for coliforms (total and fecal) shall be those listed in 40 CFR 136 or any improved method determined by the Regional Water Board (and approved by USEPA) to be appropriate. Detection methods used for enterococcus shall be those presented in USEPA publication USEPA 600/4-85/076, *Test Methods for Escherichia coli and Enterococci in Water by Membrane Filter Procedure,* listed under 40 CFR 136, and any other method approved by the Regional Water Board.

O. Single Operational Upset.

A single operational upset (SOU) that leads to simultaneous violations of more than one pollutant parameter shall be treated as a single violation and limits the Discharger's liability in accordance with the following conditions:

1. A single operational upset is broadly defined as a single unusual event that temporarily disrupts the usually satisfactory operation of a system in such a way that it results in violation of multiple pollutant parameters.

2. A Discharger may assert SOU to limit liability only for those violations which the Discharger submitted notice of the upset as required in Provision E.5.b(2) of Attachment D - Standard Provisions.

3. For purposes outside of CWC Section 13385 (h) and (i), determination of compliance and civil liability (including any more specific definition of SOU, the requirements for Dischargers to assert the SOU limitation of liability, and the manner of counting violations) shall be in accordance with the USEPA Memorandum "Issuance of Guidance Interpreting Single Operational Upset" (September 27, 1989).

4. For purposes of CWC Section 13385 (h) and (i), determination of compliance and civil liability (including any more specific definition of SOU, the requirements for Dischargers to assert the SOU limitation of liability, and the manner of counting violations) shall be in accordance with CWC Section 13385 (f)(2).

ATTACHMENT A – DEFINITIONS

Anti-Backsliding. Provisions in the Clean Water Act and USEPA regulations [CWA 303 (d) (4); CWA 402 (c); CFR 122.44 (l)] that require a reissued permit to be as stringent as the previous permit with some exceptions.

Antidegradation. Policies which ensure protection of water quality for a particular water body where the water quality exceeds levels necessary to protect fish and wildlife propagation and recreation on and in the water. This also includes special protection of waters designated as outstanding natural resource waters. Antidegradation plans are adopted by the State to minimize adverse effects on water.

Applicable Standards and Limitations means all State, interstate, and federal standards and limitations to which a discharge, a sewage sludge use or disposal practice, or a related activity is subject under the CWA, including effluent limitations, water quality standards, standards of performance, toxic effluent standards or prohibitions, best management practices, pretreatment standards, and standards for sewage sludge use or disposal under sections 301, 302, 303, 304, 306, 307, 308, 403 and 405 of CWA.

Areas of Special Biological Significance (ASBS) are those areas designated by the State Water Board as requiring protection of species or biological communities to the extent that alteration of natural water quality is undesirable.

Average Monthly Effluent Limitation (AMEL): the highest allowable average of daily discharges over a calendar month, calculated as the sum of all daily discharges measured during a calendar month divided by the number of daily discharges measured during that month.

Average Weekly Effluent Limitation (AWEL): the highest allowable average of daily discharges over a calendar week (Sunday through Saturday), calculated as the sum of all daily discharges measured during a calendar week divided by the number of daily discharges measured during that week.

Beneficial Uses of the waters of the State that may be protected against quality degradation include, but are not limited to, domestic, municipal, agricultural and industrial supply; power generation; recreation; aesthetic enjoyment; navigation; and preservation and enhancement of fish, wildlife, and other aquatic resources or preserves.

Best Management Practices (BMPs) means schedules of activities, prohibitions of practices, maintenance procedures, and other management practices to prevent or reduce the pollution of waters of the United States. BMPs also include treatment requirements, operating procedures, and practices to control plant site runoff, spillage or leaks, sludge or waste disposal, or drainage from raw material storage.

Best Professional Judgment (BPJ). The method used by permit writers to develop technology-based NPDES permit conditions on a case-by-case basis using all reasonably available and relevant data.

Bioaccumulative pollutants are those substances taken up by an organism from its surrounding medium through gill membranes, epithelial tissue, or from food and subsequently concentrated and retained in the body of the organism.
Bioassay. A test used to evaluate the relative potency of a chemical or a mixture of chemicals by comparing its effect on a living organism with the effect of a standard preparation on the same type of organism.

Biochemical Oxygen Demand (BOD). A measurement of the amount of oxygen utilized by the decomposition of organic material, over a specified time period (usually 5 days) in a wastewater sample; it is used as a measurement of the readily decomposable organic content of a wastewater.

Biosolids. Sewage sludge that is used or disposed through land application, surface disposal, incineration, or disposal in a municipal solid waste landfill. Sewage sludge is defined as solid, semi-solid, or liquid untreated residue generated during the treatment of domestic sewage in a treatment facility.

Bypass. The intentional diversion of wastestreams from any portion of a treatment (or pretreatment) facility.

Carbonaceous Biochemical Oxygen Demand (CBOD). The measurement of oxygen required for carbonaceous oxidation of a nonspecific mixture of organic compounds. Interference caused by nitrifying bacteria in the standard 5-day BOD test is eliminated by suppressing the nitrification reaction.

Certifying Official. All applications, including NOIs, must be signed as follows:

For a corporation: By a responsible corporate officer, which means: (i) a president, secretary, treasurer, or vice-president of the corporation in charge of a principal business function, or any other person who performs similar policy or decision making functions for the corporation, or (ii) the manager of one or more manufacturing, production, or operating facilities, provided, the manager is authorized to make management decisions which govern the operation of the regulated facility including having the explicit or implicit duty of making major capital investment recommendations, and initiating and directing other comprehensive measures to assure long term environmental compliance with environmental laws and regulations; the manager can ensure that the necessary systems are established or actions taken to gather complete and accurate information for permit application requirements; and where authority to sign documents has been assigned or delegated to the manager in accordance with corporate procedures.

For a partnership or sole proprietorship: By a general partner or the proprietor, respectively; or

For a municipality, state, federal, or other public agency: By either a principal executive officer or ranking elected official. A principal executive officer of a federal agency includes (i) the chief executive officer of the agency, or (ii) a senior executive officer having responsibility for the overall operations of a principal geographic unit of the agency.

Chemical Oxygen Demand (COD). A measure of the oxygen-consuming capacity of inorganic and organic matter present in wastewater. COD is expressed as the amount of oxygen consumed in mg/L. Results do not necessarily correlate to the biochemical oxygen demand (BOD) because the chemical oxidant may react with substances that bacteria do not stabilize.

Composite Sample. Sample composed of two or more discrete samples of at least 100 milliliters collected at periodic intervals during the operating hours of a facility over a 24-hour period. The aggregate sample will reflect the average water quality covering the compositing or sample period. For volatile pollutants, aliquots must be combined in the laboratory immediately before analysis. The composite must be flow proportional; either the time interval between each aliquot or the volume of each aliquot must be proportional to either stream flow at the time of sampling or the total stream flow since the collection of the previous aliquot. Aliquots may be collected manually or automatically.

Conventional Pollutants. Pollutants typical of municipal sewage, and for which municipal secondary treatment plants are typically designed; defined at 40 CFR 401.16 as BOD, TSS, fecal coliform bacteria, oil and grease, and pH.

Daily Discharge: Daily Discharge is defined as either: (1) the total mass of the constituent discharged over the calendar day (12:00 am through 11:59 pm) or any 24-hour period that reasonably represents a calendar day for purposes of sampling (as specified in the permit), for a constituent with limitations expressed in units of mass or; (2) the unweighted arithmetic mean measurement of the constituent over the day for a constituent with limitations expressed in other units of measurement (e.g., concentration).

The daily discharge may be determined by the analytical results of a composite sample taken over the course of one day (a calendar day or other 24-hour period defined as a day) or by the arithmetic mean of analytical results from one or more grab samples taken over the course of the day.

For composite sampling, if 1 day is defined as a 24-hour period other than a calendar day, the analytical result for the 24-hour period will be considered as the result for the calendar day in which the 24-hour period ends.

Daily Maximum Limit. The maximum allowable daily discharge of pollutant. Where daily maximum limitations are expressed in units of mass, the daily discharge is the total mass discharged over the course of the 24-hour period. Where daily maximum limitations are expressed in terms of a concentration, the daily discharge is the arithmetic average

measurement of the pollutant concentration derived from all measurements taken that 24-hour period.

Degrade (Degradation). Degradation shall be determined by comparison of the waste field and reference site(s) for characteristic species diversity, population density, contamination, growth anomalies, debility, or supplanting of normal species by undesirable plant and animal species. Degradation occurs if there are significant differences in any of three major biotic groups, namely, demersal fish, benthic invertebrates, or attached algae. Other groups may be evaluated where benthic species are not affected, or are not the only ones affected.

Dilution Credit is the amount of dilution granted to a discharge in the calculation of a water quality-based effluent limitation, based on the allowance of a specified mixing zone. It is calculated from the dilution ratio or determined through conducting a mixing zone study or modeling of the discharge and receiving water.

Dilution Ratio is the critical low flow of the upstream receiving water divided by the flow of the effluent discharged.

Discharge when used without qualification means the discharge of a pollutant. Discharge of a pollutant means:

1. Any addition of any pollutant or combination of pollutants to waters of the United States from any point source, or

2. Any addition of any pollutant or combination of pollutants to the waters of the contiguous zone or the ocean from any point source other than a vessel or other floating craft that is being used as a means of transportation.

This definition includes additions of pollutants into waters of the United States from: surface runoff which is collected or channeled by man; discharges through pipes, sewers, or other conveyances owned by a state, municipality, or other person which do not lead to a treatment works; and discharges through pipes, sewers, or other conveyances, leading into privately owned treatment works. This term does not include an addition of pollutants by any indirect Discharger.

Discharge Monitoring Report (DMR) means the USEPA uniform form, including any subsequent additions, revisions, or modifications for the reporting of self-monitoring results by permittees. DMRs must be used by approved states as well as by USEPA. The USEPA will supply DMRs to any approved state upon request. The USEPA national forms may be modified to substitute the state agency name, address, logo, and other similar information, as appropriate, in place of USEPA's.

Effluent Limitation means any restriction imposed by an Order on quantities, discharge rates, and concentrations of pollutants that are discharged from point sources into waters of the United States, the waters of the contiguous zone, or the ocean.

Grab Sample. An individual sample of at least 100 milliliters collected at a randomly selected time over a period not exceeding 15 minutes. The sample is taken from a waste stream on a one-time basis without consideration of the flow rate of the waste stream and without consideration of time of day.

Instantaneous Maximum Effluent Limitation: the highest allowable value for any single grab sample or aliquot (i.e., each grab sample or aliquot is independently compared to the instantaneous maximum limitation).

Instantaneous Minimum Effluent Limitation: the lowest allowable value for any single grab sample or aliquot (i.e., each grab sample or aliquot is independently compared to the instantaneous minimum limitation).

Maximum Daily Effluent Limitation (MDEL): the highest allowable daily discharge of a pollutant.

Method Detection Limit (MDL) is the minimum concentration of a substance that can be measured and reported with 99 percent confidence that the analyte concentration is greater than zero.

Minimum Level (ML) is the concentration at which the entire analytical system must give a recognizable signal and acceptable calibration point. The ML is the concentration in a sample that is equivalent to the concentration of the lowest calibration standard analyzed by a specific analytical procedure, assuming that all the method specified sample weights, volumes, and processing steps have been followed.

Sanitary Sewer. A pipe or conduit (sewer) intended to carry wastewater or water-borne wastes from homes, businesses, and industries to the POTW.

Sanitary Sewer Overflows (SSO). Untreated or partially treated sewage overflows from a sanitary sewer collection system.

Secondary Treatment Standards. Technology-based requirements for direct discharging municipal sewage treatment facilities. Standards are based on a combination of physical and biological processes typical for the treatment of pollutants in municipal sewage. Standards are expressed as a minimum level of effluent quality in terms of: BOD_5, total suspended solids (TSS), and pH (except as provided for special considerations and treatment equivalent to secondary treatment).

Severe Property Damage. Substantial physical damage to property, damage to the treatment facilities which causes them to become inoperable, or substantial and permanent loss of natural resources which can reasonably be expected to occur in the absence of a bypass. Severe property damage does not mean economic loss caused by delays in production.

Six-month Median Effluent Limitation. The highest allowable moving median of all daily discharges for any 180-day period.

Surface Waters include navigable waters, rivers, streams (including ephemeral streams), lakes, playa lakes, natural ponds, bays, the Pacific Ocean, lagoons, estuaries, man-made canals, ditches, dry arroyos, mudflats, sandflats, wet meadows, wetlands, swamps, marshes, sloughs and water courses, and storm drains tributary to surface waters. Surface Waters include waters of the United States as used in the federal CWA (see 40 CFR 122.2).

Technology-Based Effluent Limit. A permit limit for a pollutant that is based on the capability of a treatment method to reduce the pollutant to a certain concentration.

Toxic Pollutant. Pollutants or combinations of pollutants, including disease-causing agents, which after discharge and upon exposure, ingestion, inhalation or assimilation into any organism, either directly from the environment or indirectly by ingestion through food chains, will, on the basis of information available to the Administrator of USEPA, cause death, disease, behavioral abnormalities, cancer, genetic mutations, physiological malfunctions, (including malfunctions in reproduction) or physical deformations, in such organisms or their offspring. Toxic pollutants also include those pollutants listed by the Administrator under CWA Section 307 (a) (1) or any pollutant listed under Section 405 (d), which relates to sludge management.

Toxicity Reduction Evaluation (TRE). A site-specific study conducted in a stepwise process designed to identify the causative agent(s) of effluent toxicity, isolate the sources of toxicity, evaluate the effectiveness of toxicity control options, and then confirm the reduction in effluent toxicity.

Upset is defined as (a) An unusual event that temporarily disrupts the usually satisfactory operation of a system. This definition constitutes the plain meaning or broad definition of the term “upset.” (b) An event more narrowly defined at 40 CFR 122.41 (n)(1) and which belongs to a subset of events that fit the definition of the term “upset” provided in (a).

Water Quality Control Plan consists of a designation or establishment for the waters within a specified area of all of the following:

1. Beneficial uses to be protected.

2. Water quality objectives.

3. A program of implementation needed for achieving water quality objectives.

Water Quality Objectives means the limits or levels of water quality constituents or characteristics which are established for the reasonable protection of beneficial uses of water or the prevention of nuisance within a specific area.

Whole Effluent Toxicity (WET). The total toxic effect of an effluent measured directly with a toxicity test.

ATTACHMENT B – MAP

ATTACHMENT C – FLOW SCHEMATIC

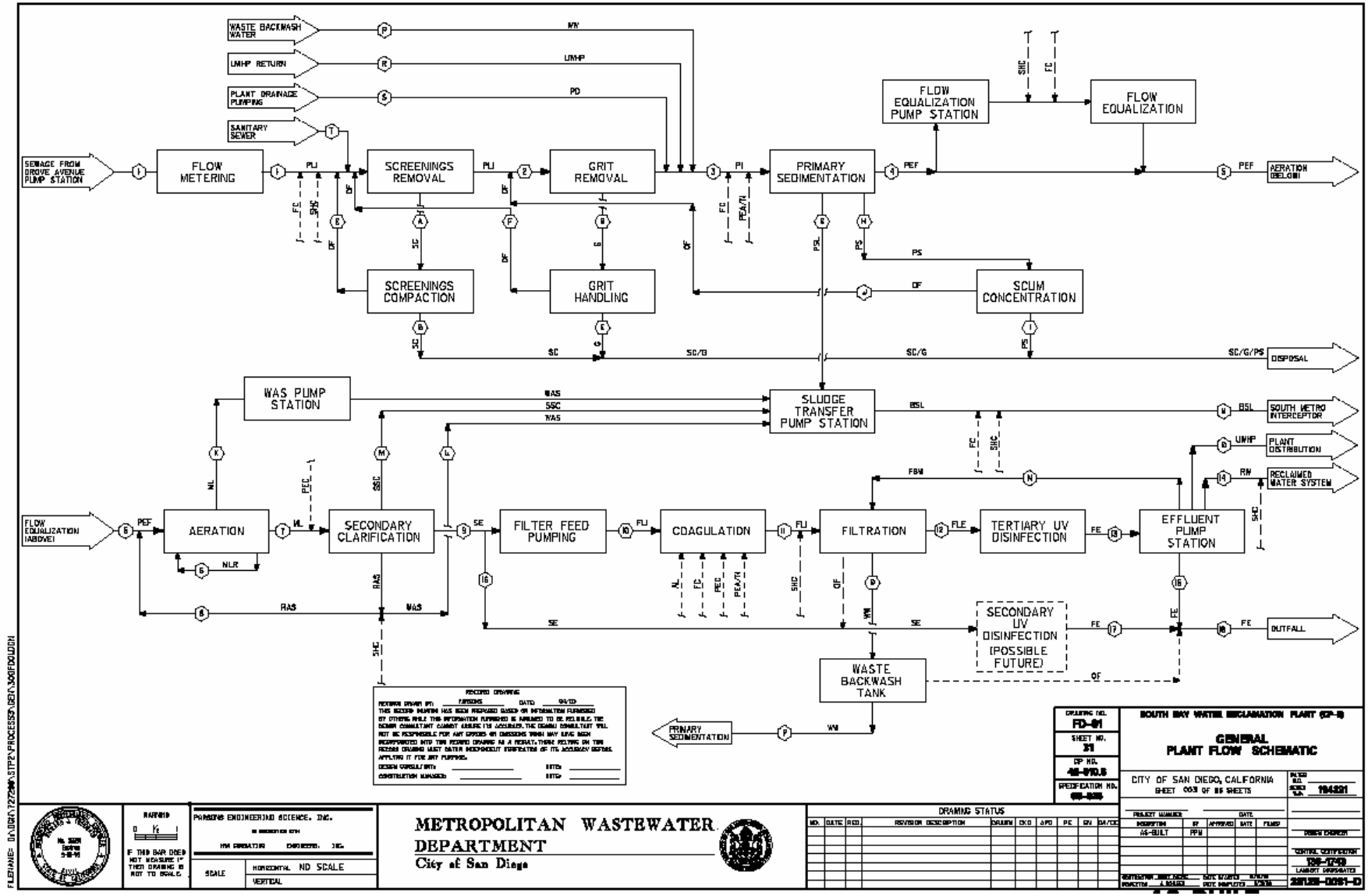

ATTACHMENT D – FEDERAL STANDARD PROVISIONS

I. STANDARD PROVISIONS – PERMIT COMPLIANCE

A. Duty to Comply

1. The Discharger must comply with all of the conditions of this Order. Any noncompliance constitutes a violation of the Clean Water Act (CWA) and the CWC and is grounds for enforcement action, for permit termination, revocation and reissuance, or denial of a permit renewal application [*40 CFR §122.41(a)*].

2. The Discharger shall comply with effluent standards or prohibitions established under Section 307(a) of the Clean Water Act for toxic pollutants and with standards for sewage sludge use or disposal established under Section 405(d) of the CWA within the time provided in the regulations that establish these standards or prohibitions, even if this Order has not been modified to incorporate the requirement [*40 CFR §122.41(a)(1)*].

B. Need to Halt or Reduce Activity Not a Defense

It shall not be a defense for a Discharger in an enforcement action that it would have been necessary to halt or reduce the permitted activity in order to maintain compliance with the conditions of this Order [*40 CFR §122.41(c)*].

C. Duty to Mitigate

The Discharger shall take all reasonable steps to minimize or prevent any discharge or sludge use or disposal in violation of this Order that has a reasonable likelihood of adversely affecting human health or the environment [*40 CFR §122.41(d)*].

D. Proper Operation and Maintenance

The Discharger shall at all times properly operate and maintain all facilities and systems of treatment and control (and related appurtenances) which are installed or used by the Discharger to achieve compliance with the conditions of this Order. Proper operation and maintenance also includes adequate laboratory controls and appropriate quality assurance procedures. This provision requires the operation of backup or auxiliary facilities or similar systems that are installed by a Discharger only when necessary to achieve compliance with the conditions of this Order [*40 CFR §122.41(e)*].

E. Property Rights

1. This Order does not convey any property rights of any sort or any exclusive privileges [*40 CFR §122.41(g)*].

2. The issuance of this Order does not authorize any injury to persons or property or invasion of other private rights, or any infringement of State or local law or regulations [*40 CFR §122.5(c)*].

F. Inspection and Entry

The Discharger shall allow the Regional Water Quality Control Board (RWQCB), State Water Resources Control Board (SWRCB), United States Environmental Protection Agency (USEPA), and/or their authorized representatives (including an authorized contractor acting as their representative), upon the presentation of credentials and other documents, as may be required by law, to [*40 CFR §122.41(i)*] [*CWC 13383(c)*]:

1. Enter upon the Discharger's premises where a regulated facility or activity is located or conducted, or where records are kept under the conditions of this Order [*40 CFR §122.41(i)(1)*];

2. Have access to and copy, at reasonable times, any records that must be kept under the conditions of this Order [*40 CFR §122.41(i)(2)*];

3. Inspect and photograph, at reasonable times, any facilities, equipment (including monitoring and control equipment), practices, or operations regulated or required under this Order [*40 CFR §122.41(i)(3)*];

4. Sample or monitor, at reasonable times, for the purposes of assuring Order compliance or as otherwise authorized by the CWA or the CWC, any substances or parameters at any location [*40 CFR §122.41(i)(4)*].

G. Bypass

1. Definitions

   a. “Bypass” means the intentional diversion of waste streams from any portion of a treatment facility [*40 CFR §122.41(m)(1)(i)*].

   b. “Severe property damage” means substantial physical damage to property, damage to the treatment facilities, which causes them to become inoperable, or substantial and permanent loss of natural resources that can reasonably be expected to occur in the absence of a bypass. Severe property damage does not mean economic loss caused by delays in production [*40 CFR §122.41(m)(1)(ii)*].

2. Bypass not exceeding limitations – The Discharger may allow any bypass to occur which does not cause exceedances of effluent limitations, but only if it is for essential maintenance to assure efficient operation. These bypasses are not subject to the provisions listed in Standard Provisions – Permit Compliance I.G.3 and I.G.5 below [*40 CFR §122.41(m)(2)*].

3. Prohibition of bypass – Bypass is prohibited, and the Regional Water Board may take enforcement action against a Discharger for bypass, unless [*40 CFR §122.41(m)(4)(i)*]:

    a. Bypass was unavoidable to prevent loss of life, personal injury, or severe property damage [*40 CFR §122.41(m)(4)(A)*];

    b. There were no feasible alternatives to the bypass, such as the use of auxiliary treatment facilities, retention of untreated wastes, or maintenance during normal periods of equipment downtime. This condition is not satisfied if adequate back-up equipment should have been installed in the exercise of reasonable engineering judgment to prevent a bypass that occurred during normal periods of equipment downtime or preventive maintenance [*40 CFR §122.41(m)(4)(B)*]; and

    c. The Discharger submitted notice to the Regional Water Board as required under Standard Provision – Permit Compliance I.G.5 below [*40 CFR §122.41(m)(4)(C)*].

4. The Regional Water Board may approve an anticipated bypass, after considering its adverse effects, if the Regional Water Board determines that it will meet the three conditions listed in Standard Provisions – Permit Compliance I.G.3 above [*40 CFR §122.41(m)(4)(ii)*].

5. Notice

    a. Anticipated bypass. If the Discharger knows in advance of the need for a bypass, it shall submit a notice, if possible at least 10 days before the date of the bypass [*40 CFR §122.41(m)(3)(i)*].

    b. Unanticipated bypass. The Discharger shall submit notice of an unanticipated bypass as required in Standard Provisions - Reporting V.E below [*40 CFR §122.41(m)(3)(ii)*].

H. Upset

Upset means an exceptional incident in which there is unintentional and temporary noncompliance with technology based permit effluent limitations because of factors beyond the reasonable control of the permittee. An upset does not include noncompliance to the extent caused by operational error, improperly designed treatment facilities, inadequate treatment facilities, lack of preventive maintenance, or careless or improper operation [*40 CFR §122.41(n)(1)*].

1. Effect of an upset. An upset constitutes an affirmative defense to an action brought for noncompliance with such technology based permit effluent limitations if the requirements of paragraph H.2 of this section are met. No determination made during administrative review of claims that noncompliance was caused by upset, and

before an action for noncompliance, is final administrative action subject to judicial review [*40 CFR §122.41(n)(2)*].

2. Conditions necessary for a demonstration of upset. A Discharger who wishes to establish the affirmative defense of upset shall demonstrate, through properly signed, contemporaneous operating logs or other relevant evidence that [*40 CFR §122.41(n)(3)*]:

   a. An upset occurred and that the Discharger can identify the cause(s) of the upset [*40 CFR §122.41(n)(3)(i)*];

   b. The permitted facility was, at the time, being properly operated [*40 CFR §122.41(n)(3)(i)*];

   c. The Discharger submitted notice of the upset as required in Standard Provisions – Reporting V.E.2.b [*40 CFR §122.41(n)(3)(iii)*]; and

   d. The Discharger complied with any remedial measures required under Standard Provisions – Permit Compliance I.C above [*40 CFR §122.41(n)(3)(iv)*].

3. Burden of proof. In any enforcement proceeding, the Discharger seeking to establish the occurrence of an upset has the burden of proof [*40 CFR §122.41(n)(4)*].

II. STANDARD PROVISIONS – PERMIT ACTION

A. General

This Order may be modified, revoked and reissued, or terminated for cause. The filing of a request by the Discharger for modification, revocation and reissuance, or termination, or a notification of planned changes or anticipated noncompliance does not stay any Order condition [*40 CFR §122.41(f)*].

B. Duty to Reapply

If the Discharger wishes to continue an activity regulated by this Order after the expiration date of this Order, the Discharger must apply for and obtain a new permit [*40 CFR §122.41(b)*].

C. Transfers

This Order is not transferable to any person except after notice to the Regional Water Board. The Regional Water Board may require modification or revocation and reissuance of the Order to change the name of the Discharger and incorporate such other requirements as may be necessary under the CWA and the CWC [*40 CFR §122.41(l)(3)*] [*40 CFR §122.61*].

III. STANDARD PROVISIONS – MONITORING

A. Samples and measurements taken for the purpose of monitoring shall be representative of the monitored activity [*40 CFR §122.41(j)(1)*].

B. Monitoring results must be conducted according to test procedures under 40 CFR Part 136 or, in the case of sludge use or disposal, approved under 40 CFR Part 136 unless otherwise specified in 40 CFR Part 503 unless other test procedures have been specified in this Order [*40 CFR §122.41(j)(4)*] [*40 CFR §122.44(i)(1)(iv)*].

IV. STANDARD PROVISIONS – RECORDS

A. Except for records of monitoring information required by this Order related to the Discharger's sewage sludge use and disposal activities, which shall be retained for a period of at least five years (or longer as required by 40 CFR Part 503), the Discharger shall retain records of all monitoring information, including all calibration and maintenance records and all original strip chart recordings for continuous monitoring instrumentation, copies of all reports required by this Order, and records of all data used to complete the application for this Order, for a period of at least three (3) years from the date of the sample, measurement, report or application. This period may be extended by request of the Regional Water Board Executive Officer at any time [*40 CFR §122.41(j)(2)*].

B. Records of monitoring information shall include:

1. The date, exact place, and time of sampling or measurements [*40 CFR §122.41(j)(3)(i)*];

2. The individual(s) who performed the sampling or measurements [*40 CFR §122.41(j)(3)(ii)*];

3. The date(s) analyses were performed [*40 CFR §122.41(j)(3)(iii)*];

4. The individual(s) who performed the analyses [*40 CFR §122.41(j)(3)(iv)*];

5. The analytical techniques or methods used [*40 CFR §122.41(j)(3)(v)*]; and

6. The results of such analyses [*40 CFR §122.41(j)(3)(vi)*].

C. Claims of confidentiality for the following information will be denied [*40 CFR §122.7(b)*]:

1. The name and address of any permit applicant or Discharger [*40 CFR §122.7(b)(1)*]; and

2. Permit applications and attachments, permits and effluent data [*40 CFR §122.7(b)(2)*].

V. STANDARD PROVISIONS – REPORTING

A. Duty to Provide Information

The Discharger shall furnish to the Regional Water Board, SWRCB, or USEPA within a reasonable time, any information which the Regional Water Board, SWRCB, or USEPA may request to determine whether cause exists for modifying, revoking and reissuing, or terminating this Order or to determine compliance with this Order. Upon request, the Discharger shall also furnish to the Regional Water Board, SWRCB, or USEPA copies of records required to be kept by this Order [*40 CFR §122.41(h)*] [*CWC 13267*].

B. Signatory and Certification Requirements

1. All applications, reports, or information submitted to the Regional Water Board, SWRCB, and/or USEPA shall be signed and certified in accordance with paragraph (2.) and (3.) of this provision [*40 CFR §122.41(k)*].

2. All permit applications shall be signed as follows:

    a. For a corporation: By a responsible corporate officer. For the purpose of this section, a responsible corporate officer means: (i) A president, secretary, treasurer, or vice-president of the corporation in charge of a principal business function, or any other person who performs similar policy- or decision-making functions for the corporation, or (ii) the manager of one or more manufacturing, production, or operating facilities, provided, the manager is authorized to make management decisions which govern the operation of the regulated facility including having the explicit or implicit duty of making major capital investment recommendations, and initiating and directing other comprehensive measures to assure long term environmental compliance with environmental laws and regulations; the manager can ensure that the necessary systems are established or actions taken to gather complete and accurate information for permit application requirements; and where authority to sign documents has been assigned or delegated to the manager in accordance with corporate procedures [*40 CFR §122.22(a)(1)*];

    b. For a partnership or sole proprietorship: by a general partner or the proprietor, respectively [*40 CFR §122.22(a)(2)*]; or

    c. For a municipality, State, federal, or other public agency: by either a principal executive officer or ranking elected official. For purposes of this provision, a principal executive officer of a federal agency includes: (i) the chief executive officer of the agency, or (ii) a senior executive officer having responsibility for the overall operations of a principal geographic unit of the agency (e.g., Regional Administrators of USEPA) [*40 CFR §122.22(a)(3)*].

3. All reports required by this Order and other information requested by the Regional Water Board, SWRCB, or USEPA shall be signed by a person described in paragraph (b) of this provision, or by a duly authorized representative of that person. A person is a duly authorized representative only if:

   a. The authorization is made in writing by a person described in paragraph (2.) of this provision [*40 CFR §122.22(b)(1)*];

   b. The authorization specified either an individual or a position having responsibility for the overall operation of the regulated facility or activity such as the position of plant manager, operator of a well or a well field, superintendent, position of equivalent responsibility, or an individual or position having overall responsibility for environmental matters for the company (a duly authorized representative may thus be either a named individual or any individual occupying a named position) [*40 CFR §122.22(b)(2)*]; and

   c. The written authorization is submitted to the Regional Water Board, SWRCB, or USEPA [*40 CFR §122.22(b)(3)*].

4. If an authorization under paragraph (3.) of this provision is no longer accurate because a different individual or position has responsibility for the overall operation of the facility, a new authorization satisfying the requirements of paragraph (3.) of this provision must be submitted to the Regional Water Board, SWRCB or USEPA prior to or together with any reports, information, or applications, to be signed by an authorized representative [40 CFR §122.22(c)].

5. Any person signing a document under paragraph (2.) or (3.) of this provision shall make the following certification:

   "I certify under penalty of law that this document and all attachments were prepared under my direction or supervision in accordance with a system designed to assure that qualified personnel properly gather and evaluate the information submitted. Based on my inquiry of the person or persons who manage the system or those persons directly responsible for gathering the information, the information submitted is, to the best of my knowledge and belief, true, accurate, and complete. I am aware that there are significant penalties for submitting false information, including the possibility of fine and imprisonment for knowing violations" [*40 CFR §122.22(d)*].

C. Monitoring Reports

1. Monitoring results shall be reported at the intervals specified in the Monitoring and Reporting Program in this Order [*40 CFR §122.41(l)(4)*].

2. Monitoring results must be reported on a Discharge Monitoring Report (DMR) form or forms provided or specified by the Regional Water Board or SWRCB for reporting results of monitoring of sludge use or disposal practices [*40 CFR §122.41(l)(4)(i)*].

3. If the Discharger monitors any pollutant more frequently than required by this Order using test procedures approved under 40 CFR Part 136 or, in the case of sludge use or disposal, approved under 40 CFR Part 136 unless otherwise specified in 40 CFR Part 503, or as specified in this Order, the results of this monitoring shall be included in the calculation and reporting of the data submitted in the DMR or sludge reporting form specified by the Regional Water Board [*40 CFR §122.41(l)(4)(ii)*].

4. Calculations for all limitations, which require averaging of measurements, shall utilize an arithmetic mean unless otherwise specified in this Order [*40 CFR §122.41(l)(4)(iii)*].

D. Compliance Schedules

Reports of compliance or noncompliance with, or any progress reports on, interim and final requirements contained in any compliance schedule of this Order, shall be submitted no later than 14 days following each schedule date [*40 CFR §122.41(l)(5)*].

E. Twenty-Four Hour Reporting

1. The Discharger shall report any noncompliance that may endanger health or the environment. Any information shall be provided orally within 24 hours from the time the Discharger becomes aware of the circumstances. A written submission shall also be provided within five (5) days of the time the Discharger becomes aware of the circumstances. The written submission shall contain a description of the noncompliance and its cause; the period of noncompliance, including exact dates and times, and if the noncompliance has not been corrected, the anticipated time it is expected to continue; and steps taken or planned to reduce, eliminate, and prevent reoccurrence of the noncompliance [*40 CFR §122.41(l)(6)(i)*].

2. The following shall be included as information that must be reported within 24 hours under this paragraph [*40 CFR §122.41(l)(6)(ii)*]:

   a. Any unanticipated bypass that exceeds any effluent limitation in this Order [*40 CFR §122.41(l)(6)(ii)(A)*].

   b. Any upset that exceeds any effluent limitation in this Order [*40 CFR §122.41(l)(6)(ii)(B)*].

   c. Violation of a maximum daily discharge limitation for any of the pollutants listed in this Order to be reported within 24 hours [*40 CFR §122.41(l)(6)(ii)(C)*].

3. The Regional Water Board may waive the above-required written report under this provision on a case-by-case basis if an oral report has been received within 24 hours [*40 CFR §122.41(l)(6)(iii)*].

F. Planned Changes

The Discharger shall give notice to the Regional Water Board as soon as possible of any planned physical alterations or additions to the permitted facility. Notice is required under this provision only when [*40 CFR §122.41(l)(1)*]:

1. The alteration or addition to a permitted facility may meet one of the criteria for determining whether a facility is a new source in 40 CFR §122.29(b) [*40 CFR §122.41(l)(1)(i)*]; or

2. The alteration or addition could significantly change the nature or increase the quantity of pollutants discharged. This notification applies to pollutants which are subject neither to effluent limitations in this Order nor to notification requirements under 40 CFR Part 122.42(a)(1) (see Additional Provisions—Notification Levels VII.A.1) [*40 CFR §122.41(l)(1)(ii)*].

3. The alteration or addition results in a significant change in the Discharger's sludge use or disposal practices, and such alteration, addition, or change may justify the application of permit conditions that are different from or absent in the existing permit, including notification of additional use or disposal sites not reported during the permit application process or not reported pursuant to an approved land application plan [*40 CFR §122.41(l)(1)(iii)*].

G. Anticipated Noncompliance

The Discharger shall give advance notice to the Regional Water Board or SWRCB of any planned changes in the permitted facility or activity that may result in noncompliance with General Order requirements [*40 CFR §122.41(l)(2)].*

H. Other Noncompliance

The Discharger shall report all instances of noncompliance not reported under Standard Provisions – Reporting E.3, E.4, and E.5 at the time monitoring reports are submitted. The reports shall contain the information listed in Standard Provision – Reporting V.E [*40 CFR §122.41(l)(7)*].

I. Other Information

When the Discharger becomes aware that it failed to submit any relevant facts in a permit application, or submitted incorrect information in a permit application or in any report to the Regional Water Board, SWRCB, or USEPA, the Discharger shall promptly submit such facts or information [*40 CFR §122.41(l)(8)*].

VI. STANDARD PROVISIONS – ENFORCEMENT

A. The CWA provides that any person who violates section 301, 302, 306, 307, 308, 318 or 405 of the Act, or any permit condition or limitation implementing any such sections in a permit issued under section 402, or any requirement imposed in a pretreatment program approved under sections 402(a)(3) or 402(b)(8) of the Act, is subject to a civil penalty not to exceed $25,000 per day for each violation. The CWA provides that any person who negligently violates sections 301, 302, 306, 307, 308, 318, or 405 of the Act, or any condition or limitation implementing any of such sections in a permit issued under section 402 of the Act, or any requirement imposed in a pretreatment program approved under section 402(a)(3) or 402(b)(8) of the Act, is subject to criminal penalties of $2,500 to $25,000 per day of violation, or imprisonment of not more than one (1) year, or both. In the case of a second or subsequent conviction for a negligent violation, a person shall be subject to criminal penalties of not more than $50,000 per day of violation, or by imprisonment of not more than two (2) years, or both. Any person who knowingly violates such sections, or such conditions or limitations is subject to criminal penalties of $5,000 to $50,000 per day of violation, or imprisonment for not more than three (3) years, or both. In the case of a second or subsequent conviction for a knowing violation, a person shall be subject to criminal penalties of not more than $100,000 per day of violation, or imprisonment of not more than six (6) years, or both. Any person who knowingly violates section 301, 302, 303, 306, 307, 308, 318 or 405 of the Act, or any permit condition or limitation implementing any of such sections in a permit issued under section 402 of the Act, and who knows at that time that he thereby places another person in imminent danger of death or serious bodily injury, shall, upon conviction, be subject to a fine of not more than $250,000 or imprisonment of not more than 15 years, or both. In the case of a second or subsequent conviction for a knowing endangerment violation, a person shall be subject to a fine of not more than $500,000 or by imprisonment of not more than 30 years, or both. An organization, as defined in section 309(c)(3)(B)(iii) of the Clean Water Act, shall, upon conviction of violating the imminent danger provision, be subject to a fine of not more than $1,000,000 and can be fined up to $2,000,000 for second or subsequent convictions [*40 CFR §122.41(a)(2)*] [*CWC 13385 and 13387*].

B. Any person may be assessed an administrative penalty by the Regional Water Board for violating section 301, 302, 306, 307, 308, 318 or 405 of this Act, or any permit condition or limitation implementing any of such sections in a permit issued under section 402 of this Act. Administrative penalties for Class I violations are not to exceed $10,000 per violation, with the maximum amount of any Class I penalty assessed not to exceed $25,000. Penalties for Class II violations are not to exceed $10,000 per day for each day during which the violation continues, with the maximum amount of any Class II penalty not to exceed $125,000 [*40 CFR §122.41(a)(3)*].

C. The CWA provides that any person who falsifies, tampers with, or knowingly renders inaccurate any monitoring device or method required to be maintained under this permit shall, upon conviction, be punished by a fine of not more than $10,000, or by imprisonment for not more than 2 years, or both. If a conviction of a person is for a

violation committed after a first conviction of such person under this paragraph, punishment is a fine of not more than $20,000 per day of violation, or by imprisonment of not more than 4 years, or both [*40 CFR §122.41(j)(5)*].

D. The CWA provides that any person who knowingly makes any false statement, representation, or certification in any record or other document submitted or required to be maintained under this Order, including monitoring reports or reports of compliance or noncompliance shall, upon conviction, be punished by a fine of not more than $10,000 per violation, or by imprisonment for not more than six months per violation, or by both [*40 CFR §122.41(k)(2)*].

VII. ADDITIONAL PROVISIONS – NOTIFICATION LEVELS

A. Non-Municipal Facilities

Existing manufacturing, commercial, mining, and silvicultural Dischargers shall notify the Regional Water Board as soon as they know or have reason to believe [*40 CFR §122.42(a)*]:

1. That any activity has occurred or will occur that would result in the discharge, on a routine or frequent basis, of any toxic pollutant that is not limited in this Order, if that discharge will exceed the highest of the following "notification levels" [*40 CFR §122.42(a)(1)*]:

    a. 100 micrograms per liter (µg/L) [*40 CFR §122.42(a)(1)(i)*];

    b. 200 µg/L for acrolein and acrylonitrile; 500 µg/L for 2,4-dinitrophenol and 2-methyl-4,6-dinitrophenol; and 1 milligram per liter (mg/L) for antimony [*40 CFR §122.42(a)(1)(ii)*];

    c. Five (5) times the maximum concentration value reported for that pollutant in the Report of Waste Discharge [*40 CFR §122.42(a)(1)(iii)*]; or

    d. The level established by the Regional Water Board in accordance with 40 CFR §122.44(f) [*40 CFR §122.42(a)(1)(iv)*].

2. That any activity has occurred or will occur that would result in the discharge, on a non-routine or infrequent basis, of any toxic pollutant that is not limited in this Order, if that discharge will exceed the highest of the following “notification levels" [*40 CFR §122.42(a)(2)*]:

    a. 500 micrograms per liter (µg/L) [*40 CFR §122.42(a)(2)(i)*];

    b. 1 milligram per liter (mg/L) for antimony [*40 CFR §122.42(a)(2)(ii)*];

c. Ten (10) times the maximum concentration value reported for that pollutant in the Report of Waste Discharge [*40 CFR §122.42(a)(2)(iii)*]; or

d. The level established by the Regional Water Board in accordance with 40 CFR §122.44(f) [*40 CFR §122.42(a)(2)(iv)*].

B. Publicly-Owned Treatment Works (POTWs)

All POTWs shall provide adequate notice to the Regional Water Board of the following [*40 CFR §122.42(b)*]:

1. Any new introduction of pollutants into the POTW from an indirect Discharger that would be subject to Sections 301 or 306 of the CWA if it were directly discharging those pollutants [*40 CFR §122.42(b)(1)*]; and

2. Any substantial change in the volume or character of pollutants being introduced into that POTW by a source introducing pollutants into the POTW at the time of adoption of the Order [*40 CFR §122.42(b)(2)*].

Adequate notice shall include information on the quality and quantity of effluent introduced into the POTW as well as any anticipated impact of the change on the quantity or quality of effluent to be discharged from the POTW [*40 CFR §122.42(b)(3)*].

ATTACHMENT E – MONITORING AND REPORTING PROGRAM

TABLE OF CONTENTS

I. General Monitoring Provisions E-2
II. Monitoring Locations E-3
III. Influent Monitoring Requirements E-5
IV. Effluent Monitoring Requirements E-6
V. Land Outfall Monitoring E-8
VI. Whole Effluent Toxicity Requirements E-9
VII. Receiving Water Monitoring Requirements E-10
A. Core Monitoring E-11
B. Strategic Process Studies E-17
C. Regional Monitoring E-17
VIII. Reporting Requirements E-17
A. General Monitoring and Reporting Requirements E-17
B. Self Monitoring Reports E-18
C. Discharge Monitoring Reports (DMRs) E-21

LIST OF TABLES

Table 1. Influent and Effluent Monitoring Station Locations E-3
Table 2. Offshore Monitoring Station Locations E-3
Table 3. Trawl Stations E-4
Table 4. Rig Fishing Stations E-4
Table 5. Shore Station Locations E-5
Table 6. Influent Monitoring E-5
Table 7. Effluent Monitoring E-6
Table 8. Whole Effluent Toxicity Testing E-9
Table 9. Approved Tests for Chronic Toxicity E-10
Table 10. Offshore Monitoring Requirements E-11
Table 11. Sediment Monitoring Requirements E-14
Table 12. Reporting Schedule E-19

ATTACHMENT E – MONITORING AND REPORTING PROGRAM (MRP)

The Code of Federal Regulations (CFR) at 40 CFR 122.48 requires that all National Pollutant Discharge Elimination System (NPDES) permits specify monitoring and reporting requirements. CWC sections 13267 and 13383 also authorize the Regional Water Quality Control Board (Regional Water Board) to require technical and monitoring reports. This MRP establishes monitoring and reporting requirements that implement the federal and California regulations.

I. GENERAL MONITORING PROVISIONS

A. Samples and measurements taken as required herein shall be representative of the volume and nature of the monitored discharge. All samples shall be taken at the monitoring points specified below and, unless otherwise specified, before the monitored flow joins or is diluted by any other waste stream, body of water, or substance. Monitoring points shall not be changed without notification to and the approval of the Regional Water Board. Samples shall be collected at times representative of "worst case" conditions with respect to compliance with the requirements of Order No. R9-2006-0067.

B. Appropriate flow measurement devices and methods consistent with accepted scientific practices shall be selected and used to ensure the accuracy and reliability of measurements of the volume of monitored discharges. The devices shall be installed, calibrated and maintained to ensure that the accuracy of the measurements is consistent with the accepted capability of that type of device. Devices selected shall be capable of measuring flows with a maximum deviation of less than ±5 percent from true discharge rates throughout the range of expected discharge volumes.

C. Monitoring must be conducted according to United States Environmental Protection Agency (USEPA) test procedures approved at 40 CFR Part 136, *Guidelines Establishing Test Procedures for the Analysis of Pollutants Under the Clean Water Act* as amended, or unless other test procedures are specified in Order No. R9-2006-0067 and/or in this MRP and/or by the Regional Water Board.

D. All analyses shall be performed in a laboratory certified to perform such analyses by the California Department of Health Services or a laboratory approved by the Regional Water Board.

E. Records of monitoring information shall include information required under Standard Provision, Attachment D, Section IV.

F. All monitoring instruments and devices used by the discharger to fulfill the prescribed monitoring program shall be properly maintained and calibrated as necessary to ensure their continued accuracy. All flow measurement devices shall be calibrated at least once per year, or more frequently, to ensure continued accuracy of the devices.

G. The Discharger shall have, and implement, an acceptable written quality assurance (QA) plan for laboratory analyses. Duplicate chemical analyses must be conducted on a minimum of ten percent of the samples or at least one sample per month, whichever is greater. A similar frequency shall be maintained for analyzing spiked samples. When requested by USEPA or the Regional Water Board, the Discharger will participate in the NPDES discharge monitoring report QA performance study. The Discharger should have a success rate equal or greater than 80 percent.

H. Analysis for toxic pollutants, including acute and chronic toxicity, with performance goals based on water quality objectives of the 2005 California Ocean Plan shall be conducted in accordance with procedures described in the 2005 California Ocean Plan and restated in this MRP.

I. This permit may be modified in accordance with the requirements set forth at 40 CFR Parts 122 and 124, to include appropriate conditions or limits to address demonstrated effluent toxicity based on newly available information, or to implement any USEPA approved, new, state water quality standards applicable to effluent toxicity.

II. MONITORING LOCATIONS

The Discharger shall establish the following monitoring locations to demonstrate compliance with the effluent limitations, discharge specifications, and other requirements in this Order:

Table 1. Influent and Effluent Monitoring Station Locations

Discharge Point Name	Monitoring Location Name	Monitoring Location Description
	I-001	At a location up stream of all in-plant return flows and representative influent sample can be obtained.
E-001	E-001	At a location down stream of all contributing flows from the South Bay Water Reclamation Plant (SBWRP) and representative of the SBWRP final effluent discharged to the South Bay Ocean Outfall (SBOO) (SBWRP effluent only).

Table 2. Offshore Monitoring Station Locations

Station	Latitude	Longitude	Depth (ft)	Depth (m)
I-1	32°28.400' N	117°16.620' W	198	60
I-2	32°28.400' N	117°11.940' W	106	32
I-3	32°28.020' N	117°10.080' W	89	27
I-4	32°28.300' N	117°08.400' W	59	18
I-5	32°28.300' N	117°07.800' W	46	14
I-6	32°29.610' N	117°09.780' W	86	26
I-7	32°31.000' N	117°15.180' W	172	52
I-8	32°31.000' N	117°12.120' W	90	27
I-9	32°30.700' N	117°10.740' W	96	29
I-10	32°31.000' N	117°09.360' W	63	19

Station	Latitude	Longitude	Depth (ft)	Depth (m)
I-11	32°30.800' N	117°08.220' W	43	13
I-12	32°31.970' N	117°10.980' W	92	28
I-13	32°32.250' N	117°12.720' W	125	38
I-14	32°32.580' N	117°11.040' W	92	28
I-15	32°32.270' N	117°11.340' W	102	31
I-16	32°32.270' N	117°10.980' W	92	28
I-17	32°32.270' N	117°10.680' W	83	25
I-18	32°32.170' N	117°09.660' W	63	19
I-19	32°32.180' N	117°07.740' W	33	10
I-20	32°33.420' N	117°15.420' W	182	55
I-21	32°33.640' N	117°13.620' W	135	41
I-22	32°33.200' N	117°11.100' W	92	28
I-23	32°33.050' N	117°09.900' W	69	21
I-24	32°33.400' N	117°08.700' W	36	11
I-25	32°33.670' N	117°08.880' W	30	9
I-26	32°34.470' N	117°08.820' W	30	9
I-27	32°34.450' N	117°11.460' W	92	28
I-28	32°35.630' N	117°15.840' W	182	55
I-29	32°35.670' N	117°13.380' W	125	38
I-30	32°35.720' N	117°11.820' W	92	28
I-31	32°35.730' N	117°10.320' W	63	19
I-32	32°35.680' N	117°08.280' W	33	10
I-33	32°37.430' N	117°14.220' W	99	30
I-34	32°37.800' N	117°12.960' W	63	19
I-35	32°38.200' N	117°10.920' W	63	19
I-36	32°38.350' N	117°09.240' W	36	11
I-37	32°38.880' N	117°12.980' W	40	12
I-38	32°40.130' N	117°11.200' W	36	11
I-39	32°34.340' N	117°10.050' W	59	18
I-40	32°33.230' N	117°08.170' W	33	10

Table 3. Trawl Stations

Station	Latitude	Longitude	Depth (ft)	Depth (m)
SD-15	32°28.350' N	117°10.500' W	89	27
SD-16	32°31.000' N	117°10.720' W	89	27
SD-17	32°32.200' N	117°11.430' W	99	30
SD-18	32°32.580' N	117°11.350' W	99	30
SD-19	32°33.500' N	117°11.080' W	92	28
SD-20	32°34.680' N	117°11.450' W	96	29
SD-21	32°36.990' N	117°12.690' W	96	29

Table 4. Rig Fishing Stations

Station	Latitude	Longitude	Depth (ft)	Depth (m)
RF-3	32°32.270' N	117°11.000' W	89	27
RF-4	32°25.910' N	117°17.655' W	89	27

Table 5. Shore Station Locations

Station	Latitude	Longitude	Description
S-0	32°25.148' N	117°05.837' W	United States (Southernmost location, just north of the border fence)
S-2	32°29.922' N	117°07.380' W	Mexico (Beach south of El Vigia Restaurant)
S-3	32°31.542' N	117°07.440' W	Mexico (Beach at end of existing road of Playas de Tijuana)
S-4	32°32.118' N	117°07.500' W	United States (Beach just north of the border fence)
S-5	32°33.468' N	117°07.860' W	United States (Beach north of mouth of estuary)
S-6	32°33.978' N	117°07.980' W	United States (Beach at end of Seacoast Drive)
S-8	32°38.208' N	117°08.640' W	United States (Silver Strand State Beach, Area 4 West of Coronado Cays)
S-9	32°40.620' N	117°10.680' W	United States (Beach at end of Avenida Del Sol seaward of Hotel Del Coronado)
S-10	32°32.598' N	117°07.500' W	United States (Beach at the terminus of Monument Road)
S-11	32°33.678' N	117°07.920' W	United States (Beach approximately ¾ mile north of the mouth of the Tijuana River)
S-12	32°35.142' N	117°07.980' W	United States (Beach at the end of Carnation Street)

III. INFLUENT MONITORING REQUIREMENTS

Monitoring Location I-001

The Discharger shall monitor influent at I-001, respectively, as follows:

Table 6. Influent Monitoring

Parameter	Units	Sample Type	Minimum Sampling Frequency
Flow	MGD	recorder / totalizer	Continuous
Biochemical Oxygen Demand (BOD) (5-day @ 20 Deg. C)	mg/L	24 hr composite	Weekly
TSS	mg/L	24 hr composite	Weekly
Arsenic	µg/L	24 hr composite	Monthly
Cadmium	µg/L	24 hr composite	Monthly
Copper	µg/L	24 hr composite	Monthly
Chromium (VI)	µg/L	24 hr composite	Monthly
Cyanide	µg/L	24 hr composite	Monthly

Lead	µg/L	24 hr composite	Monthly
Mercury	µg/L	24 hr composite	Monthly
Nickel	µg/L	24 hr composite	Monthly
Silver	µg/L	24 hr composite	Monthly
Zinc	µg/L	24 hr composite	Monthly

IV. EFFLUENT MONITORING REQUIREMENTS

Sample Type and Frequency

The Discharger shall monitor secondary effluent at monitoring location E-001 as follows:

Table 7. Effluent Monitoring E-001

Parameter	Units	Sample Type [1]	Minimum Sampling Frequency
Flow [3]	MGD	recorder / totalizer	Continuous
Biochemical Oxygen Demand (BOD) (5-day @ 20 Deg. C)	mg/L	24 hr composite	Daily[2]
TSS	mg/L	24 hr composite	Daily [2]
pH	pH Units	grab	Daily [2]
Oil and Grease	mg/L	grab	Weekly [4]
Settleable Solids	mL/L	grab	Weekly
Turbidity	NTU	24 hr composite	Weekly [4]
Dissolved Oxygen	mg/L	grab	Weekly
Temperature	º F	grab	Weekly
Total Residual Chlorine	µg/L	grab	Weekly
Arsenic	µg/L	24 hr composite	Monthly [4]
Cadmium	µg/L	24 hr composite	Monthly [4]
Chromium (VI) [5]	µg/L	24 hr composite	Monthly [4]
Copper	µg/L	24 hr composite	Monthly [4]
Lead	µg/L	24 hr composite	Monthly [4]
Mercury	µg/L	24 hr composite	Monthly [4]
Nickel	µg/L	24 hr composite	Monthly [4]
Selenium	µg/L	24 hr composite	Monthly [4]
Silver	µg/L	24 hr composite	Monthly [4]
Zinc	µg/L	24 hr composite	Monthly [4]
Cyanide	µg/L	24 hr composite	Monthly [4]
Ammonia	mg/L	24 hr composite	Monthly [4]
Non-Chlorinated Phenolic Compounds	µg/L	24 hr composite	Monthly [4]
Chlorinated Phenolics	µg/L	24 hr composite	Monthly [4]
Endosulfan	µg/L	24 hr composite	Monthly [4]
Endrin	µg/L	24 hr composite	Monthly [4]
HCH	µg/L	24 hr composite	Monthly [4]
Radioactivity	pCi/L	grab	Monthly [4]

Parameter	Units	Sample Type [1]	Minimum Sampling Frequency
Acrolein	µg/L	grab	Quarterly [4]
Antimony	µg/L	24 hr composite	Quarterly [4]
Bis (2-Chloroethoxy) Methane	µg/L	24 hr composite	Quarterly [4]
Bis (2-Chloroisopropyl) Ether	µg/L	grab	Quarterly [4]
Chlorobenzene	µg/L	grab	Quarterly [4]
Chromium (Trivalent)	µg/L	24 hr composite	Quarterly [4]
Di-N-Butyl Phthalate	µg/L	24 hr composite	Quarterly [4]
Dichlorobenzenes	µg/L	grab	Quarterly [4]
Diethyl Phthalate	µg/L	24 hr composite	Quarterly [4]
Dimethyl Phthalate	µg/L	24 hr composite	Quarterly [4]
4,6-Dinitro-2-Methylphenol	µg/L	24 hr composite	Quarterly [4]
2,4-Dinitrophenol	µg/L	24 hr composite	Quarterly [4]
Ethylbenzene	µg/L	grab	Quarterly [4]
Fluoranthene	µg/L	24 hr composite	Quarterly [4]
Hexachlorocyclopentadiene	µg/L	24 hr composite	Quarterly [4]
Nitrobenzene	µg/L	grab	Quarterly [4]
Thallium	µg/L	24 hr composite	Quarterly [4]
Toluene	µg/L	grab	Quarterly [4]
1,1,1-Trichloroethane	µg/L	grab	Quarterly [4]
Tributyltin	µg/L	24 hr composite	Quarterly [4]
Acrylonitrile	µg/L	grab	Quarterly [4]
Aldrin	µg/L	24 hr composite	Quarterly [4]
Benzene	µg/L	grab	Quarterly [4]
Benzidine	µg/L	24 hr composite	Quarterly [4]
Beryllium	µg/L	24 hr composite	Quarterly [4]
Bis (2-Chloroethyl) Ether	µg/L	grab	Quarterly [4]
Bis (2-Ethylhexyl) Phthalate	µg/L	24 hr composite	Quarterly [4]
Carbon Tetrachloride	µg/L	grab	Quarterly [4]
Chlordane	µg/L	24 hr composite	Quarterly [4]
Chlorodibromomethane	µg/L	grab	Quarterly [4]
Chloroform	µg/L	grab	Quarterly [4]
DDT	µg/L	24 hr composite	Quarterly [4]
1,4-Dichlorobenzene	µg/L	grab	Quarterly [4]
3,3'-Dichlorobenzidine	µg/L	24 hr composite	Quarterly [4]
1,2-Dichloroethane	µg/L	grab	Quarterly [4]
1,1-Dichloroethylene	µg/L	grab	Quarterly [4]
Dichlorobromomethane	µg/L	grab	Quarterly [4]
Dichloromethane	µg/L	grab	Quarterly [4]
1,3-Dichloropropene	µg/L	grab	Quarterly [4]
Dieldrin	µg/L	24 hr composite	Quarterly [4]
2,4-Dinitrotoluene	µg/L	24 hr composite	Quarterly [4]
1,2-Diphenylhydrazine	µg/L	24 hr composite	Quarterly [4]
Halomethanes	µg/L	grab	Quarterly [4]

Parameter	Units	Sample Type [1]	Minimum Sampling Frequency
Heptachlor	µg/L	24 hr composite	Quarterly [4]
Heptachlor Epoxide	µg/L	24 hr composite	Quarterly [4]
Hexachlorobenzene	µg/L	24 hr composite	Quarterly [4]
Hexachlorobutadiene	µg/L	24 hr composite	Quarterly [4]
Hexachloroethane	µg/L	24 hr composite	Quarterly [4]
Isophorone	µg/L	24 hr composite	Quarterly [4]
N-Nitrosodimethylamine	µg/L	24 hr composite	Quarterly [4]
N-Nitrosodi-N-Propylamine	µg/L	24 hr composite	Quarterly [4]
N-Nitrosodiphenylamine	µg/L	24 hr composite	Quarterly [4]
PAHs	µg/L	24 hr composite	Quarterly [4]
PCB Congeners	µg/L	24 hr composite	Quarterly [4]
TCDD Equivalents	µg/L	24 hr composite	Quarterly [4]
1,1,2,2-Tetrachloroethane	µg/L	grab	Quarterly [4]
Tetrachloroethylene	µg/L	grab	Quarterly [4]
Toxaphene	µg/L	24 hr composite	Quarterly [4]
Trichloroethylene	µg/L	grab	Quarterly [4]
1,1,2-Trichloroethane	µg/L	grab	Quarterly [4]
2,4,6-Trichlorophenol	µg/L	grab	Quarterly [4]
Vinyl Chloride	µg/L	grab	Quarterly [4]

[1] For samples, which are to be physically composited prior to analyses, or for the results of analyses that are to be arithmetically composited, the basis for compositing shall be the rate of discharge to the ocean, not the rate of inflow to the plant.
[2] Five days per week except seven days per week for at least one week during July or August of each year.
[3] Report the total daily effluent flow and the monthly average effluent flow.
[4] The minimum frequency of monitoring for this constituent is automatically increased to twice the minimum frequency specified, if any analysis for this constituent yields a result higher than the effluent limit specified in this Order for this constituent. The increased minimum frequency of monitoring shall remain in effect until the results of a minimum of four consecutive analyses for this constituent are below all effluent limits specified in this Order for this constituent.
[5] The discharger may, at its option, monitor for total chromium. If the measured total chromium concentration exceeds the hexavalent chromium limitation, it will be assumed that the hexavalent chromium limitation was exceeded unless the results of a hexavalent chromium analysis of a replicate sample indicate otherwise. When analyzing for hexavalent chromium, the appropriate sampling and analytical method must be used (i.e., 24-hour composite, cooled to 4º C and analyzed within 24 hours).

V. LAND OUTFALL MONITORING

The combined effluent from the International Wastewater Treatment Plant and the SBWRP shall be monitored quarterly. Samples shall be collected from the effluent of each plant and combined in the laboratory in accordance with a ratio that is proportional to the flow from each plant. For those parameters requiring 24-hour composite samples, the samples from each plant shall be collected over the same 24-hour period and combined according to a ratio proportional to the total flow from each plant for the period. For those parameters requiring grab samples, the samples shall be collected from each plant simultaneously and combined according to a ratio proportional to the flow from each plant at the time of sample collection. The monitored parameters shall

be the same as for the effluent monitoring program except that acute and chronic toxicity testing shall use the most sensitive species as determined by screening tests of the combined effluent.

VI. WHOLE EFFLUENT TOXICITY TESTING REQUIREMENTS

The Discharger shall conduct acute and chronic toxicity testing on effluent samples collected at Effluent Monitoring Station E-001 in accordance with the following schedule and requirements:

Table 8. Whole Effluent Toxicity Testing

Test	Unit	Sample [1]	Minimum Test Frequency
Acute Toxicity	TU_a	24-Hr. Composite	quarterly
Chronic Toxicity	TU_c	24-Hr. Composite	monthly

[1] For samples, which are to be physically composited prior to analyses, or for the results of analyses that are to be arithmetically composited, the basis for compositing shall be the rate of discharge to the ocean, not the rate of inflow to the plant.

Acute toxicity testing shall be performed using either a marine fish or invertebrate species in accordance with procedures established by the USEPA guidance manual, Methods for Measuring the Acute Toxicity of Effluents and Receiving Waters to Freshwater and Marine Organisms, 5th Edition, October 2002 (EPA-821-R-02-012).

Critical life stage toxicity tests shall be performed to measure chronic toxicity. Testing shall be performed using methods outlined in *Short-Term Methods for Estimating the Chronic Toxicity of Effluents and Receiving Waters to West Coast Marine and Estuarine Organisms* (Chapman, G.A., D.L. Denton, and J.M. Lazorchak, 1995) or *Procedures Manual for Conducting Toxicity Tests Developed by the Marine Bioassay Project* (SWRCB, 1996)

A screening period for chronic toxicity shall be conducted every other year for three months, using a minimum of three test species with approved test protocols, from the following list (from the 2005 California Ocean Plan). Other tests may be used, if they have been approved for such testing by the State Water Board. The test species shall include a fish, an invertebrate, and an aquatic plant. After the screening period, the most sensitive test species shall be used for the monthly testing. Repeat screening periods may be terminated after the first month if the most sensitive species is the same as found previously to be most sensitive. Control and dilution water should be receiving water or lab water as appropriate. If the dilution water is different from the culture water, then culture water should be used in a second control. The sensitivity of the test organisms to a reference toxicant shall be determined concurrently with each bioassay test and reported with test results.

Table 9. Approved Tests for Chronic Toxicity

Species	Test	Tier [1]	Reference [2]
giant kelp, *Macrocystis pyrifera*	percent germination; germ tube length	1	a, c
red abalone, *Haliotis rufescens*	abnormal shell development	1	a, c
oyster, *Crassostrea gigas*; mussels, *Mytilus spp.*	abnormal shell development; percent survival	1	a, c
urchin, *Strongylocentrotus purpuratus*; sand dollar, *Dendraster excentricus*	percent normal development	1	a, c
urchin, *Strongylocentrotus purpuratus*; sand dollar, *Dendraster excentricus*	percent fertilization	1	a, c
shrimp, *Homesimysis costata*	percent survival; growth	1	a, c
shrimp, *Mysidopsis bahia*	percent survival; fecundity	2	b, d
topsmelt, *Atherinops affinis*	larval growth rate; percent survival	1	a, c
Silversides, *Menidia beryllina*	larval growth rate; percent survival	2	b, d

[1] First tier methods are preferred for compliance monitoring. If first tier organisms are not available, the Discharger can use a second tier test method following approval by the Regional Water Board.

[2] Protocol References:

a. Chapman, G.A., D.L. Denton, and J.M. Lazorchak. 1995. Short-term Methods for Estimating the Chronic Toxicity of Effluents and Receiving Waters to West Coast Marine and Estuarine Organisms. USEPA Report No. EPA/600/R-95/136.
b. Klemm, D.J., G.E. Morrison, T.J. Norberg-King, W.J. Peltier, and M.A. Heber. 1994. Short-term Methods for Estimating the Chronic Toxicity of Effluents and Receiving Water to Marine and Estuarine Organisms. USEPA Report No. EPA-600-4-91-003.
c. SWRCB 1996. Procedures Manual for Conducting Toxicity Tests Developed by the Marine Bioassay Project. 96-1WQ.
d. Weber, C.I., W.B. Horning, I.I., D.J. Klemm, T.W. Nieheisel, P.A. Lewis, E.L. Robinson, J. Menkedick and F. Kessler 9eds). 1998. Short-term Methods for Estimating the Chronic Toxicity of Effluents and Receiving Waters to Marine and Estuarine Organisms. EPA/600/4-87/028. National Information Service, Springfield, VA.

VII. RECEIVING WATER MONITORING REQUIREMENTS

Receiving water and sediment monitoring in the vicinity of the SBOO shall be conducted as specified below. Station location, sampling, sample preservation and analyses, when not specified, shall be by methods approved by the Executive Officer. The monitoring program may be modified by the Executive Officer at any time.

The receiving water and sediment monitoring program for the SBOO may be conducted jointly with other dischargers to the SBOO.

During monitoring events, if possible, sample stations shall be located using a land-based microwave positioning system or a satellite positioning system such as GPS. If an alternate navigation system is proposed, its accuracy should be compared to that of microwave and satellite based systems, and any compromises in accuracy shall be justified.

A. Core Monitoring

1. Shoreline Water Quality Monitoring

All shoreline stations shall be monitored as follows:

a. Total coliforms, fecal coliforms, and enterococcus shall be sampled on a weekly basis at Monitoring Stations S-0, S-2 through S-6, and S-8 through S-12, such that each day of the week is represented over a two month period.

b. Samples shall be collected in accordance with "Standard Operating Procedures for the Collection of Water Samples for Bacterial Analysis from Ocean and Bay Receiving Waters" developed by the County of San Diego Department of Environmental Health and incorporated herein by reference.

c. At the same time samples are collected from shoreline stations, the following information shall be recorded: observation of wind direction and speed; weather (cloudy, sunny, or rainy); tidal conditions; and observations of water color, discoloration, oil and grease; turbidity, odor, and materials of sewage origin in the water or on the beach; water temperature (º C); and any other noteworthy water conditions.

d. If a shoreline water quality monitoring station consistently exceeds a coliform objective or exceeds a geometric mean enterococcus density of 24 organisms per 100 mL for a thirty-day period or 12 organisms per 100 mL for a six-month period, the Discharger shall conduct a survey to determine if discharges from the Discharger's Facilities are the source of the contamination. If the survey indicates that elevated coliform and/or enterococcus levels are attributable to discharges from the Discharger's Facilities, the Discharger shall take action to control the source.

2. Offshore Water Quality Monitoring

All receiving water monitoring shall be conducted as follows:

Table 10. Offshore Monitoring Requirements

Parameter	Units	Stations	Sample Type	Sampling Frequency
Visual Observations[1]	--	I1 to I40	Visual	[1]
Temperature[2]	°C	I1 to I40	Profile	Monthly
pH[2]	units	I1 to I40	Profile	Monthly
Salinity[2]	ppt	I1 to I40	Profile	Monthly
Dissolved Oxygen[2]	mg/L	I1 to I40	Profile	Monthly
Light Transmittance[2]	Percent	I1 to I40	Profile	Monthly
Oil and Grease[3]	mg/L	I3, I5, I7 to I14, I16, I18 to	Grab	Monthly

		I26, I30, I32, I33, I36 to I40		
Total Suspended Solids	mg/L	I3, I5, I7 to I14, I16, I18 to I26, I30, I32, I33, I36 to I40	Grab	Monthly
Total and Fecal Coliforms; Enterococcus[5]	CFU/100 ml	I3, I5, I7 to I14, I16, I18 to I24, I30, I32, I33, I36 to I38, and I40	Grab	Monthly
Total and Fecal Coliforms; Enterococcus[6]	CFU/100 ml	I25, I26, I39	Grab	Weekly

[1] Visual observations of the surface water conditions at the designated receiving water stations shall be conducted in such a manner as to enable the observer to describe and report the presence, if any, of floatables of sewage origin. Observations of wind (direction and speed), weather (cloudy, sunny, or rainy), direction of current, tidal conditions (high or low), water color, oil and grease, turbidity, and odor shall be recorded. These observations shall be taken whenever a sample is collected.

[2] Temperature, salinity, dissolved oxygen, light transmittance, and pH shall be measured monthly throughout the entire water column using probes (XBTs, CTDs) or meters (DO, pH). Suspended solids and light transmittance measurements shall be taken on the same day and as close together in time as possible.

[3] Oil and grease shall be measured monthly in the top five feet of surface water.

[4] Total suspended solids shall be measured monthly at three depths (sub-surface, mid-depth, and bottom).

[5] Total and fecal coliform and enterococcus shall be sampled at least monthly at 25 offshore stations from three depths (sub-surface, mid-depth, and bottom).

[6] Total and fecal coliform and enterococcus shall be sampled at three kelp bed stations (I25, I26, and I39) at least five times per month, such that each day of the week is represented over a two month period. Samples shall be collected from three depths (sub-surface, mid-depth, and bottom).

3. Biological Monitoring

a. Fish Trawls. Fish trawls shall be conducted quarterly to assess the community structure of demersal fish and macroinvertebrates and the presence of priority pollutants in fish. Single trawls shall be conducted quarterly at seven trawl stations (SD-15 to SD-21) using a Marinovich 25-foot head rope otter trawl and following the most recent Southern California Bight Project field manual guidance. The organisms captured at each trawl station shall be identified as to species.

For each of the seven stations, a community structure analysis shall be conducted. This will consist of the wet weight of each species, number of individuals per species, total numerical abundance, species richness and diversity (i.e. Shannon-Weiner), and multivariate pattern analyses (e.g. ordination and classification analyses). Abnormalities and disease systems shall be recorded and itemized, such as fin erosion, tumors, lesions, etc.

Chemical analyses of fish tissue shall be performed semiannually on selected target species at the seven trawl stations. The list of constituents shall be the same as for sediments with the exception that a measurement for total lipids will replace organic

carbon, nitrogen, and grain size. The species targeted for analysis will be selected for their ecological or commercial importance. Three replicate composite samples shall be prepared from each trawl station for liver tissue and taken from at least three fish of the same species.

The species targeted for analysis shall be primarily flatfish including, but not limited to, the following: pacific sanddab (*Citharichthys sordidus*), longfin sanddab (*Citharichtys xanthostigma*), speckled sanddab (*Citharichthys stigmaeus*), bigmouth sole (*Hippoglossina stomata*), and hornyhead turbot (*Pleuronichthys verticalis*). The California scorpionfish (*Scorpaena guttata*) and the halfbanded rockfish (*Sebastes semicinctus*) shall be targeted at trawl stations not having sufficient number of flatfish.

The City is not required to submit reports to the Regional Board on fish trawl monitoring given the data is posted on-line.

b. Rig Fishing. Rig fishing shall be performed semiannually to monitor the uptake of pollutants in fish that are consumed by humans to determine the impact on public health, and to assess the impacts on local fish populations. The fish shall be collected by hook and line or by setting baited lines from within the zone of initial dilution (ZID) and at some point removed from the ZID. The fish shall be representative of those caught by recreational and commercial fisherman in the area. Fish samples shall be identified to species, with number of individuals per species, standard length and wet weight recorded. Physical abnormalities and disease symptoms shall be recorded and itemized (e.g., fin rot, lesions, and tumors).

Three replicate composite samples of the target species shall be obtained at each station. Each composite shall consist of a minimum of three individuals. Muscle tissue shall be chemically analyzed for the same set of constituents as trawl-caught fish.

4. Benthic Monitoring

a. Sediment Characteristics. Sediment samples shall be collected from 27 stations (I1 to I4, I6 to I10, I12 to I16, I18, I20 to I23, I27 to I31, I33 to I35) using a 0.1-square meter modified Van Veen grab sampler. Sediment samples for chemical analyses shall be taken from the top 2 centimeters of the grab. The samples shall be analyzed for the set of constituents listed below. Sediment chemistry ambient monitoring may be conducted using USEPA approved methods, or methods developed by NOAA's National Status and Trends for Marine Environmental Quality. For chemical analysis of sediment, samples shall be reported on a dry weight basis.

Table 11. Sediment Monitoring Requirements

Determination	Units	Type of Sample	Minimum Frequency
Sediment grain size	Microns	core	Semiannually
Total Organic Carbon	Percent	core	Semiannually
Total Nitrogen	Percent	core	Semiannually
Acid Volatile Sulfides	mg/kg	core	Semiannually
Aluminum	mg/kg	core	Semiannually
Antimony	mg/kg	core	Semiannually
Arsenic	mg/kg	core	Semiannually
Cadmium	mg/kg	core	Semiannually
Chromium	mg/kg	core	Semiannually
Copper	mg/kg	core	Semiannually
Iron	mg/kg	core	Semiannually
Lead	mg/kg	core	Semiannually
Manganese	mg/kg	core	Semiannually
Mercury	mg/kg	core	Semiannually
Nickel	mg/kg	core	Semiannually
Selenium	mg/kg	core	Semiannually
Silver	mg/kg	core	Semiannually
Tin	mg/kg	core	Semiannually
Zinc	mg/kg	core	Semiannually
PCBs	ng/kg	core	Semiannually
2,4-DDD	ng/kg	core	Semiannually
4,4-DDD	ng/kg	core	Semiannually
2,4-DDE	ng/kg	core	Semiannually
4,4-DDE	ng/kg	core	Semiannually
2,4-DDT	ng/kg	core	Semiannually
2,4-DDT	ng/kg	core	Semiannually
Aldrin	ng/kg	core	Semiannually
Alpha-Chlordane	ng/kg	core	Semiannually
Dieldrin	ng/kg	core	Semiannually
Endosulfan	ng/kg	core	Semiannually
Endrin	ng/kg	core	Semiannually
Gamma-BHC	ng/kg	core	Semiannually
Heptachlor	ng/kg	core	Semiannually
Heptachlor Epoxide	ng/kg	core	Semiannually
Hexachlorobenzene	ng/kg	core	Semiannually
Mirex	ng/kg	core	Semiannually
Trans-Nonachlor	ng/kg	core	Semiannually
Acenapthene	µg/kg	core	Semiannually
Acenaphthylene	µg/kg	core	Semiannually
Anthracene	µg/kg	core	Semiannually
Benzo(a)anthracene	µg/kg	core	Semiannually
Benzo(o)fluoranthene	µg/kg	core	Semiannually

Determination	Units	Type of Sample	Minimum Frequency
Benzo(k)fluoranthene	µg/kg	core	Semiannually
Benzo(ghi)pyrelene	µg/kg	core	Semiannually
Benzo(a)pyrene	µg/kg	core	Semiannually
Benzo(e)pyrene	µg/kg	core	Semiannually
Biphenyl	µg/kg	core	Semiannually
Chrysene	µg/kg	core	Semiannually
Dibenz(ah)anthrace	µg/kg	core	Semiannually
Fluoranthene	µg/kg	core	Semiannually
Fluorene	µg/kg	core	Semiannually
Ideno(123cd)pyrene	µg/kg	core	Semiannually
Naphthalene	µg/kg	core	Semiannually
1-Methylnaphthalene	µg/kg	core	Semiannually
2-Methylnaphthalene	µg/kg	core	Semiannually
2,6-Dimethylnaphthalene	µg/kg	core	Semiannually
2,3,5-Trimethylnaphthale	µg/kg	core	Semiannually
Perylene	µg/kg	core	Semiannually
Phenanthrene	µg/kg	core	Semiannually
1-Methylphenanthene	µg/kg	core	Semiannually
Pyrene	µg/kg	core	Semiannually

b. Infauna. For analyses of benthic infuana, two replicate samples of bottom sediments shall be collected and analyzed semiannually from the following 27 stations: (I1 to I4, I6 to I10, I12 to I16, I18, I20 to I23, I27 to I31, I33 to I35).

The benthic infaunal samples shall be collected using a 0.1-square meter modified Van Veen grab sampler. These grab samples shall be separate from those collected for sediment analyses. The samples shall be sieved using a 1.0-millimeter mesh screen. The benthic organisms retained on the sieve shall be fixed in 15 percent buffered formalin, and transferred to 70 percent alcohol within two to seven days of storage. These organisms may be stained using Rose Bengal to facilitate sorting. Infaunal organisms, obtained during benthic monitoring shall be counted and identified to as low a taxon as possible.

Monitoring results shall consist of the raw data (number of individuals per species) along with an analysis of community parameters per station as follows:

1) Number of species per 0.1-square meter
2) Total number of species per station
3) Total numerical abundance
4) Benthic Response Index (BRI)
5) Swartz's 75 percent dominance index
6) Shannon-Weiner's diversity index (H)
7) Pielou eveness (J)

In addition to the community parameters, an annual evaluation shall be performed that includes more detailed statistical comparisons including community, temporal, and spatial analyses. Methods may include, but are not limited to, various multivariates, such as cluster analysis, ordination, and regression. Additional analyses shall also be conducted, as appropriate, to elucidate temporal and spatial trends in the data.

Random sampling: An additional array of 40 randomly selected stations shall be sampled and analyzed annually for sediment chemistry and benthic infauna. The same procedures must be followed as outlined in Benthic Monitoring Requirements (Section VII.D of this Order), with the exception of the number of samples collected per station. Only one sample is required from each of the 40 randomly selected stations. The stations shall be reselected each year by USEPA using USEPA probability-based Environmental Monitoring and Assessment Program (EMAP) design. The area shall extend from the mouth of the San Dieguito River south to the Mexican border.

The City is not required to submit reports to the Regional Board on benthic monitoring given the data is posted on-line.

The random benthic sampling requirement may be suspended as part of a resource exchange agreement to allow for participation in the Southern California Bight Regional Monitoring Surveys at the discretion of the Executive Officer.

5. Kelp Bed Monitoring

The Discharger shall participate with other ocean Dischargers in the San Diego Region in an annual regional kelp bed photographic survey. Kelp beds shall be monitored annually by means of vertical aerial infrared photography to determine the maximum aerial extent of the region's coastal kelp beds within the calendar year. Surveys shall be conducted as close as possible to the time when kelp bed canopies cover the greatest area. The entire San Diego Region coastline, from the international boundary to the San Diego Region / Santa Ana Region boundary, shall be photographed on the same day.

The images produced by the surveys shall be presented in the form of a 1:24,000 scale photo-mosaic of the entire San Diego Region coastline. Onshore reference points, locations of all ocean outfalls and diffusers, and the 30-foot (MLLW) and 60-foot (MLLW) depth contours shall be shown

The areal extent of the various kelp beds photographed in each survey shall be compared to that noted in surveys of previous years. Any significant losses, which persist for more than one year, shall be investigated by divers to determine the probable reason for the loss.

B. Strategic Process Studies

The City of San Diego may be requested to participate in special studies. Special studies differ from other elements of the monitoring program in that they are intended to be short-term and are designed to address specific research or management issues that are not addressed by the routine core monitoring elements.

C. Regional Monitoring

The Discharger shall participate and coordinate with state and local agencies and other Dischargers in the San Diego Region in development and implementation of a regional monitoring program (Bight Study) for the Pacific Ocean as directed by this Regional Water Board. The intent of the Bight Study is to maximize the efforts of all monitoring partners using a more cost-effective monitoring design and to best utilize the pooled resources of the region.

VIII. REPORTING REQUIREMENTS

A. General Monitoring and Reporting Requirements

1. The Discharger shall comply with all Standard Provisions (Attachment D) related to monitoring, reporting, and recordkeeping.

2. The Discharger shall arrange the data in tabular form so that the specified information is readily discernible. The data shall be summarized in such a manner as to clearly illustrate whether the facility is operating in compliance with waste discharge requirements.

3. The Discharger shall report with each sample result the applicable Minimum Level (ML) and the laboratory current Method Detection Limit (MDL) as determined by the procedure in 40 CFR 136.

4. The Discharger shall report all instances of noncompliance not reported under (Attachment D) D.III, D.V, and D.VI of Order No. R9-2006-0067 at the time monitoring reports are submitted.

5. The Discharger shall comply with the reporting requirements specified in Section VI.C.2.a (Treatment Plant Capacity Study), Section VI.C.2.b (Spill Reporting Requirements), and Section VI.C.2.c (Sanitary Sewer System and Sanitary Sewer Overflow Reporting Requirements) of Order No. R9-2006-0067.

6. By March 1 of each year, the Discharger shall submit an annual report to the Regional Water Board and USEPA Region 9 that contains tabular and graphical summaries of the monitoring data obtained during the previous year. The Discharger shall discuss the compliance record and corrective actions taken, or

which may be taken, or which may be needed to bring the discharge into full compliance with the requirements of Order No. R9-2006-0067 and this MRP.

7. By March 1 of each year, the Discharger shall submit an annual report to the Regional Water Board; USEPA Region 9; the State Water Board, Division of Water Quality, Regulations Unit; and the San Diego County Department of Health Services, Hazardous Materials Division, describing its pretreatment activities over the previous calendar year as specified in Section VI.C.2.e.4) of Order No. R9-2006-0067.

8. Laboratory MDLs and MLs shall be identified for each constituent in the matrix being analyzed with all reported analytical data. Acceptance of data shall be based on demonstrated laboratory performance.

9. The Discharger shall attach a cover letter to the Discharge Monitoring Report. The information contained in the cover letter shall clearly identify violations of the WDRs, discuss corrective actions taken or planned and the proposed time schedule of corrective actions. Identified violations should include a description of the requirement that was violated and a description of the violation.

B. Self Monitoring Reports (SMRs)

1. At any time during the term of this permit, the State or Regional Water Board may notify the Discharger to electronically submit self-monitoring reports. Until such notification is given, the Discharger shall submit self-monitoring reports in accordance with the requirements described below.

2. The Discharger shall submit monthly, quarterly, semiannual, and annual Self Monitoring Reports including the results of all required monitoring using USEPA-approved test methods or other test methods specified in this Order. Monthly reports shall be due on the 1st day of the second month following the end of each calendar month; quarterly reports shall be due on May 1, August 1, November 1, and February 1 following each calendar quarter; semiannual reports shall be due on August 1 and March 1 following each semiannual period; annual reports shall be due on March 1 following each calendar year.

3. Monitoring reports shall be submitted at intervals and in a manner specified in Order No. R9-2006-0067 and in this MRP. Unless otherwise specified, monitoring reports shall be submitted to the Regional Water Board and to the USEPA Region 9 according to the following schedule:

Table 12. Reporting Schedule

Monitoring Frequency	Reporting Period	Report Due Date
Continuous, Daily, Weekly, or Monthly	All	By the first day of the second month after the month of sampling
Quarterly	Jan – Mar Apr – Jun Jul – Sep Oct - Dec	June 1 September 1 December 1 March 1
Semiannually	Jan – Jun Jul - Dec	September 1 March 1
Annually	Jan – Dec	July 1

4. Minimum Levels

For each numeric effluent limitation identified in Table B of the 2005 California Ocean Plan, the Discharger shall select one or more ML and their associated analytical methods from Appendix II of the 2005 California Ocean Plan. For constituents listed in Appendix II, the Discharger shall submit an appropriate ML (and its associated analytical method) for determining compliance with the effluent limitation for that constituent. All MLs must be approved by the Regional Water Board and/or the State Water Board. The "reported" ML is the ML (and its associated analytical method) chosen by the Discharger for reporting and compliance determination from Appendix II. MLs chosen by the Discharger must be approved by the Executive Officer.

a. Selection of Minimum Levels from Appendix II

The Discharger must select from all MLs from Appendix II that are below the effluent limitation. If the effluent limitation is lower than all the MLs in Appendix II, then the Discharger must select the lowest ML.

b. Use of Minimum Levels

1) MLs, as defined in Appendix II of the 2005 California Ocean Plan, represent the lowest quantifiable concentration in a sample based on the proper application of method-specific analytical procedures and the absence of matrix interferences. MLs also represent the lowest standard concentration in the calibration curve for a specific analytical technique after the application of appropriate method-specific factors.

Common analytical practices may require different treatment of the sample relative to the calibration standard. Some examples of these practices are given in Chapter III.C.5.a of the 2005 California Ocean Plan.

2) Other factors may be applied to the ML depending on the specific sample preparation steps employed. For example, the treatment typically applied when there are matrix effects is to dilute the sample or sample aliquot by a factor of ten. In such cases, this additional factor must be applied during the computation of the reporting limit. Application of such factors will alter the reported ML.

3) The Discharger shall instruct its laboratories to establish calibration standards so that the ML (or its equivalent if there is differential treatment of samples relative to calibration standards) is the lowest calibration standard. At no time is the Discharger to use analytical data derived from *extrapolation* beyond the lowest point of the calibration curve. In accordance with the 2005 California Ocean Plan, the Discharger's laboratory may employ a calibration standard lower than the ML in Appendix II.

c. Reporting

For those constituents identified in Table B of the 2005 California Ocean Plan, the Discharger shall report with each sample result the applicable ML, the analytical method used, and the current MDL. For reporting and compliance determinations for toxic pollutants (those identified in Table B of the 2005 California Ocean Plan) the Discharger shall use analytical methods identified in Appendix II of the 2005 California Ocean Plan or as approved by the Regional Water Board or the State Water Board.

5. The Discharger shall arrange all reported data in a tabular format. The data shall be summarized to clearly illustrate whether the Facility is operating in compliance with interim and/or final effluent limitations.

6. The Discharger shall attach a cover letter to the SMR. The information contained in the cover letter shall clearly identify violations of the WDRs; discuss corrective actions taken or planned; and the proposed time schedule for corrective actions. Identified violations must include a description of the requirement that was violated and a description of the violation.

7. SMRs must be submitted to the Regional Water Board, signed and certified as required by the Standard Provisions (Attachment D), to the address listed below:

Submit monitoring reports to:
California Regional Water Quality Control Board
San Diego Region
9174 Sky Park Court, Suite 100
San Diego, CA 92123-4340

With a copy sent to:
Regional Administrator
U.S. Environmental Protection Agency
Region 9, Attn: 65/MR, W-3
75 Hawthorne Street
San Francisco, CA 94105

C. Discharge Monitoring Reports (DMRs)

1. As described in Section IIV.B.1 above, at any time during the term of this permit, the State or Regional Water Board may notify the Discharger to electronically submit self-monitoring reports. Until such notification is given, the Discharger shall submit DMRs in accordance with the requirements described below.

2. DMRs must be signed and certified as required by the Standard Provisions (Attachment D). The Discharge shall submit the original DMR and one copy of the DMR to the address listed below:

   State Water Resources Control Board
   Discharge Monitoring Report Processing Center
   Post Office Box 671
   Sacramento, CA 95812

3. All discharge monitoring results must be reported on the official USEPA pre-printed DMR forms (EPA Form 3320-1). Forms that are self-generated or modified cannot be accepted.

ATTACHMENT F – FACT SHEET

TABLE OF CONTENTS

I. Permit Information F-3
II. Description F-4
  A. Description of Wastewater F-4
  B. Discharge Points and Receiving Waters F-5
  C. Summary of Existing Requirements and Self-Monitoring Report (SMR) Data.. F-6
  D. Compliance Summary F-7
  E. Planned Changes F-8
III. Applicable Plans, Policies, and Regulations F-8
  A. Legal Authorities F-8
  B. California Environmental Quality Act (CEQA) F-8
  C. State and Federal Regulations, Policies, and Plans F-8
  D. Impaired Water Bodies on CWA 303(d) List F-10
  E. Other Plans, Policies, or Regulations F-11
IV. Rationale for Effluent Limitations and Discharge Specifications F-11
  A. Discharge Prohibitions F-12
  B. Technology-Based Effluent Limitations F-12
  C. Water Quality-Based Effluent Limitations (WQBELs) F-13
  D. Final Effluent Limitations F-19
  E. Performance Goals F-20
  F. Antidegradation F-25
V. Rationale for Receiving Water Limitations F-27
VI. Rationale for Monitoring and Reporting Requirements F-27
  A. Influent Monitoring F-27
  B. Effluent Monitoring F-28
  C. Whole Effluent Toxicity Testing Requirements F-28
  D. Land Outfall Monitoring F-29
  E. Receiving Water Monitoring F-30
  F. Fish Monitoring Requirements F-30
  G. Other Monitoring Requirements F-31
VII. Rationale for Provisions F-32
  A. Standard Provisions F-32
  B. Special Provisions F-32
VIII. Public Participation F-35
  A. Notification of Interested Parties F-36
  B. Written Comments F-36
  C. Public Hearing F-36
  D. Waste Discharge Requirements Petition F-37
  E. Information and Copying F-37
  F. Register of Interested Persons F-37
  G. Additional Information F-37

LIST OF TABLES

Table 1. Facility Information F-3
Table 2. Historic Effluent Limitations and Monitoring Data F-6
Table 3. Toxic Pollutant Monitoring F-7
Table 4. Basin Plan Beneficial Uses of the Pacific Ocean F-9
Table 5. 2005 California Ocean Plan Beneficial Uses of the Pacific Ocean F-9
Table 6. Summary of Technology-Based Effluent Limitations for Secondary Treatment Facilities Established by USEPA at 40 CFR 133.102 ..... F-12
Table 7. Summary of Technology-Based Effluent Limitations for POTWs Established by the 2005 California Ocean Plan F-13
Table 8. Pollutants Having Background Concentrations F-17
Table 9. Copper, Chlorine, and Chronic Toxicity F-17
Table 10. New Toxic Pollutants and Corresponding Limitations F-18
Table 11. Toxic Pollutant Effluent Limitations or Performance Goals Based on the 2005 California Ocean Plan F-18
Table 12. Effluent Limitations Based on Secondary Treatment F-19
Table 13. Performance Goals Based on the 2005 California Ocean Plan F-20

ATTACHMENT F – FACT SHEET

As described in Section II of this Order, this Fact Sheet includes the legal requirements and technical rationale that serve as the basis for the requirements of this Order.

I. PERMIT INFORMATION

The following table summarizes administrative information related to the Facility.

Table 1. Facility Information

WDID	9 000000900
Discharger	City of San Diego Metropolitan Wastewater Department
Name of Facility	South Bay Water Reclamation Plant
Facility Address	2411 Dairy Mart Road San Diego, CA 92154 San Diego County
Facility Contact, Title and Phone	Scott Tulloch, Director, (858) 292-6401
Authorized Persons to Sign and Submit Reports	Scott Tulloch, Director, (858) 292-6401
Mailing Address	9192 Topaz Way San Diego, CA 92123
Billing Address	9192 Topaz Way San Diego, CA 92123
Type of Facility	Municipal Publicly-Owned Treatment Works
Major or Minor Facility	Major
Threat to Water Quality	1
Complexity	A
Pretreatment Program	Yes
Reclamation Requirements	Producer and Distributor (regulated under separate WDRs)
Facility Permitted Flow	15 Million Gallons Per Day
Facility Design Flow	15 Million Gallons Per Day
Watershed	Pacific Ocean
Receiving Water	Pacific Ocean
Receiving Water Type	Ocean

A. The City of San Diego (Discharger) is the owner and operator of the South Bay Water Reclamation Plant (SBWRP), the San Ysidro sanitary sewer system, and a portion of the Imperial Beach sanitary sewer system; together these facilities comprise the municipal publicly-owned treatment works (POTW). Hereinafter, these facilities are collectively referred to as the Discharger's Facilities.

B. The Discharger discharges effluent consisting of treated wastewater from the SBWRP through the South Bay Ocean Outfall (SBOO) to the Pacific Ocean, a water of the United States, and is currently regulated by Order No. 2000-129, which was adopted on

September 13, 2000 and expired on September 13, 2005. The terms of the existing Order automatically continued in effect after the permit expiration date.

C. The Discharger filed a Report of Waste Discharge (RoWD) and submitted an application for renewal of its Waste Discharge Requirements (WDRs) and National Pollutant Discharge Elimination System (NPDES) permit on March 18, 2005. Supplemental Information was received on August 30, 2005. Subsequently, comments on the application/RoWD were provided to the Discharger and the Discharger submitted a revised complete application/RoWD.

II. FACILITY DESCRIPTION

A. Description of Wastewater and Biosolids Treatment or Controls

The City of San Diego owns and operates the SBWRP, the San Ysidro sanitary sewer system, and a portion of the Imperial Beach sanitary sewer system. The City of San Diego and the Federal Government jointly own and operate the SBOO. These facilities are collectively referred to as the Discharger's Facilities in this Order. Order No. R9-2006-0067 establishes discharge prohibitions, limitations, and conditions to regulate discharges of effluent consisting of treated wastewater from the Discharger's Facilities to the Pacific Ocean; these discharges were regulated by Order No. 2000-129 (NPDES Permit No. CA0109045) that expired on September 13, 2005 and administratively extended until the adoption of this Order.

The Discharger provides municipal wastewater treatment services to a population of approximately 150,000. SBWRP treats wastewater collected from the southern portion of the City of San Diego. The City of Chula Vista, and unincorporated portions of South County and East County also contribute wastewater flows to the SBWRP. Raw sewage from several City of San Diego communities, including San Ysidro, Otay Mesa, and the Tijuana River Valley are directed to Grove Avenue Pump Station (GAPS) and the Otay River Pump Station. Wastewater from the GAPS and the Otay River Pump Station is primarily domestic sewage from residential and commercial activities.

The City of San Diego maintains an USEPA approved pretreatment program for the SBWRP implemented by the Industrial Wastewater Control Branch of the Metropolitan Wastewater Department. The Discharger receives wastewater from two non-categorical Significant Industrial Users (Heinz Frozen Foods, frozen food preparation; R.J. Donovan Correctional Facility, correctional facility) and two Categorical Industrial Users (AP Precision Metals and GCE Industries, Inc., both are metal finishing facilities).

The SBWRP is located on a 22.3-acre site at 2411 Dairy Mart Road in the City of San Diego. SBWRP produces treated reclaimed water, which is transmitted via a reclaimed water distribution system to qualified reclaimed water customers. SBWRP production in excess of reclaimed water demands is directed to the SBOO for ocean disposal.

Wastewater treatment unit operations and processes at SBWRP consist of influent screening using mechanically cleaned bar screens, grit removal using aerated grit chambers, primary sedimentation using rectangular primary clarifiers, primary effluent flow equalization basin (1.5 million gallons), biological treatment with the air-activated sludge process and an anoxic selector zone, secondary clarification using rectangular secondary clarifiers, direct filtration using conventional deep bed mono-media (anthracite) filters, and disinfection using ultraviolet light from high intensity, medium pressure lamps.

All SBWRF flows undergo primary and secondary treatment. The quantity of flows directed to SBWRP tertiary filtration facilities is dependent on anticipated reclaimed water demands. During times of no reclaimed water demand, up to 15 million gallons per day (MGD) of the secondary effluent may be directed to the Pacific Ocean via the SBOO. During times of maximum reclaimed water demand, the entire flow may be directed to tertiary treatment and subsequent beneficial reuse.

Solids removed through the screening and grit removal processes are hauled offsite and disposed of in a landfill. Waste solids removed through the sedimentation/clarification process are returned to the sewer for transport to Point Loma, where they are again removed and directed to anaerobic digesters at the Point Loma Wastewater Treatment Plant for stabilization. After digestion, the solids are dewatered and thickened for reuse as a soil amendment or for disposal.

Secondary treatment design capacity at SBWRP is currently 18.0 MGD as a 30-day average daily flow. In the Report of Waste Discharge the Discharger reported the average daily flow as 4.24 MGD.

B. Discharge Points and Receiving Waters

The Discharger jointly owns and operates the SBOO with the Boundary and Water Commission (IBWC) of the Federal Government. The SBOO was constructed for use by the IBWC's International Wastewater Treatment Plant (IWTP) as well as the City of San Diego's SBWRP. The outfall extends westward approximately 23,600 feet from the mouth of the Tijuana River. The outfall terminates in a "wye" diffuser with two 1,980-foot diffusers. Each diffuser leg contains 82 diffuser riser assemblies, and one at the wye structure for a total of 165 diffuser riser assemblies. Each diffuser riser assembly has the potential to have four ports ranging in size from 2-3/8" to 2-5/8". The SBOO was constructed with a total average design capacity of 174 MGD and a peak hydraulic capacity of 233 MGD. Currently, the IWTP, owned and operated by a federal agency, is permitted to discharge up to 25 MGD of advanced primary treated wastewater to the outfall, in addition to the 15 MGD flow of wastewater the SBWRP is permitted to discharge. The effluent from the SBWRP is combined with the effluent from the IWTP within the SBOO prior to discharge to the Pacific Ocean. A maximum of 40 MGD of wastewater is permitted to be discharged to the SBOO from these two facilities. Thus, to achieve proper effluent velocity and dilution levels, only 18 diffuser risers (72 open ports) are in use on the South leg. The North leg of the diffuser is closed with no open

ports. Based on State Water Board modeling, the diffuser increases the initial dilution by a factor to 94.6:1. The terminus of the diffuser is located at Latitude 32° 32' 15" North, Longitude 117° 11' 00" West.

The Regional Water Board, with assistance from the State Water Board, determined the minimum initial dilution factor to be 94.6 for the discharge of up to 40 MGD of effluent through the SBOO using the United States Environmental Protection Agency (USEPA)-approved computer modeling package Visual Plumes with the UM3 model. The computer modeling was performed based on characteristics of the SBOO, the effluent, and the receiving water, subject to the input limitations of Visual Plumes. Monthly profiles for the receiving water were developed using receiving water data provide by the Discharger for the time period between June 2002 and April 2005. Initial dilution factors were determined for each monthly profile; the most conservative and minimum initial dilution factor was determined using the May profile. Section IV.C of this Fact Sheet includes additional discussion on initial dilution. Additional details of the initial dilution computer modeling performed are provided in Attachment G and in the Regional Water Board records.

C. Summary of Existing Requirements and Self-Monitoring Report (SMR) Data

Effluent limitations contained in Order No. 2000-129 for discharges from the Discharger's Facility through the SBOO and representative monitoring data for the time frame from May 1, 2002 through December 31, 2004 are as follows:

Table 2. Historic Effluent Limitations and Monitoring Data

Parameter (units)		Effluent Limitation			Monitoring Data[1]	
		Monthly Average (30-day)	Weekly Average (7-day)	Maximum at any time	Mean Discharge	Maximum Discharge
Biochemical Oxygen Demand (BOD) (5-day @ 20 Deg. C)	mg/L	30	45	50	5.28	63.5
	lb/day	3,750	5,630	6,260		
TSS	mg/L	30	45	50	3.29	41
	lb/day	3,750	5,630	6,260		
Oil and Grease	mg/L	25	40	75	1.4	10.4
	lb/day	3,130	5,000	9,380		
Settleable Solids	mL/L	1.0	1.5	3.0	0.1	1.7
Turbidity	NTU	75	100	225	2.17	28.7
pH		6.0 to 9.0			7.55	6.61
Acute toxicity	TUa	--	--	3.3[1]	<1.6	2.3

[1]Mean and maximum effluent data provided by the Discharger for the time frame from May 1, 2002 through December 31, 2004.

Order No. 2000-129 also requires that the 30-day average removals of BOD_5 and TSS through the Discharger's Facility be 85 percent or greater; and it establishes concentration and mass based effluent limitations for 77 toxic pollutants, based on water quality objectives presented in the 1997 California Ocean Plan.

D. Compliance Summary

Other than the instances noted below, the Discharger has complied with the effluent limitations of Order No. 2000-129. No noncompliance actions resulted in monetary penalties during the previous permit term.

The plant started operation on May 6, 2002. During startup there were 3 days (May 8, 9, and 11) where the BOD_5 in the SBWRP's effluent to the SBOO was 61 mg/L, 64 mg/L, and 52 mg/L, respectively. The Discharger attributes the BOD_5 instantaneous effluent limitation exceedances to the fact that BOD removal in an activated sludge plant is dependent on developing a stable biological system, which takes some time to establish.

During the second year of operation three additional effluent limitation exceedances were identified. In April the effluent daily average chlorine residual of 0.81 mg/L was exceeded by an average of 0.89 mg/L. Instantaneous maximum BOD_5 effluent limitation of 50 mg/L was exceeded on October 17, 2003 by a value of 55 mg/L and on November 18, 2003 by a value of 51 mg/L. The Discharger has attributed these exceedances to isolated occurrences related to working out problems inherent in a new plant.

Order No. 2000-129 established effluent limitations for toxic pollutants based on water quality objectives of the 1997 California Ocean Plan and required monitoring at the following intervals:

Table 3. Toxic Pollutant Monitoring

Toxic Pollutant from Table B of the 1997 California Ocean Plan	Monitoring Frequency
Ammonia	Monthly
Total Residual Chlorine	Weekly
Table B pollutants listed with Objectives for the Protection of Marine Aquatic Life from the 1997 California Ocean Plan except ammonia, chlorine and chronic toxicity	Monthly
All other Table B pollutants from the 1997 California Ocean Plan	Quarterly

Monitoring of toxic pollutants for the period of May 2002 through December 2004 indicate effluent limitations for toxic pollutants from Table B of the 1997 California Ocean Plan were not exceeded at any time.

E. Planned Changes

The Discharger has not indicated any planned changes to its Facilities.

III. APPLICABLE PLANS, POLICIES, AND REGULATIONS

The requirements contained in the proposed Order are based on the requirements and authorities described in this section.

A. Legal Authorities

This Order is issued pursuant to section 402 of the Federal Clean Water Act (CWA) and implementing regulations adopted by the USEPA and Chapter 5.5, Division 7 of the California Water Code (CWC). It shall serve as a NPDES permit for point source discharges from the Discharger's Facilities to the Pacific Ocean at Outfall 001. This Order also contains discharge prohibitions, effluent limitations, discharge specifications, provisions, and other requirements pursuant to the CWC.

B. California Environmental Quality Act (CEQA)

This action to adopt an NPDES permit is exempt from the provisions of the California Environmental Quality Act (Public Resources Code Section 21100, et seq.) in accordance with Section 13389 of the CWC.

C. State and Federal Regulations, Policies, and Plans

1. **Water Quality Control Plans.** The Regional Water Board adopted a Water Quality Control Plan for the San Diego Basin (hereinafter Basin Plan) on September 8, 1994. The Basin Plan was subsequently approved by the State Water Resources Control Board (State Water Board) on December 13, 1994. Subsequent revisions to the Basin Plan have also been adopted by the Regional Water Board and approved by the State Water Board. The Basin Plan designates beneficial uses, establishes water quality objectives, and contains implementation programs and policies to achieve those objectives for all waters addressed through the plan. Beneficial uses applicable to the Pacific Ocean are as follows:

Table 4. Basin Plan Beneficial Uses of the Pacific Ocean

Discharge Point	Receiving Water Name	Beneficial Use
Outfall 001	Pacific Ocean	Industrial Service Supply (IND); Navigation (NAV); Contact Water Recreation (REC-1); Non-Contact Water Recreation (REC-2); Commercial and Sport Fishing (COMM); Preservation of Biological Habitats of Special Significance (BIOL); Wildlife Habitat (WILD); Rare, Threatened, or Endangered Species (RARE); Marine Habitat (MAR); Aquaculture (AQUA); Migration of Aquatic Organisms (MIRG); Spawning, Reproduction, and/or Early Development (SPWN); Shellfish Harvesting (SHELL)

The Basin Plan relies primarily on the requirements of the *Water Quality Control Plan for Ocean Waters of California* (California Ocean Plan or COP) for protection of the beneficial uses of the State ocean waters. The Basin Plan, however, may contain additional water quality objectives applicable to the Discharger.

On April 21, 2005 the State Water Board adopted the latest revised California Ocean Plan. The revised California Ocean Plan became effective on February 14, 2006. The California Ocean Plan was amended in April 2005 to address reasonable potential and Areas of Special Biological Significance. The California Ocean Plan contains water quality objectives and beneficial uses for the ocean waters of California. The beneficial uses of State ocean waters to be protected are summarized below:

Table 5. 2005 California Ocean Plan Beneficial Uses of the Pacific Ocean.

Discharge Point	Receiving Water Name	Beneficial Use
Outfall 001	Pacific Ocean	Industrial Water Supply; Water Contact and Non-Contact Recreation, Including Aesthetic Enjoyment; Navigation; Commercial and Sport Fishing; Mariculture; Preservation and Enhancement of Designated Areas of Special Biological Significance (ASBS); Rare and Endangered Species; Marine Habitat; Fish Migration; Fish Spawning and Shellfish Harvesting

In order to protect these beneficial uses, the California Ocean Plan establishes water quality objectives (for bacterial, physical, chemical, and biological characteristics, and for radioactivity), general requirements for management of waste discharged to the ocean, quality requirements for waste discharges (effluent quality requirements), discharge prohibitions, and general provisions.

The State Water Board adopted a *Water Quality Control Plan for Control of Temperature in the Coastal and Interstate Water and Enclosed Bays and Estuaries of California* (Thermal Plan) on May 18, 1972, and amended this plan on September 18, 1975. The Thermal plan contains temperature objectives for coastal waters.

Requirements of this Order specifically implement the applicable Water Quality Control Plans.

2. **Antidegradation Policy.** 40 CFR 131.12 requires that State water quality standards include an antidegradation policy consistent with the federal policy. The State Water Board established California's antidegradation policy in State Water Board Resolution No. 68-16, which incorporates the requirements of the federal antidegradation policy. Resolution No. 68-16 requires that existing water quality is maintained unless degradation is justified based on specific findings. As discussed in detail in this Fact Sheet, the permitted discharge is consistent with the antidegradation provision of 40 CFR 131.12 and State Water Board Resolution No. 68-16.

3. **Anti-Backsliding Requirements.** Sections 402(o) and 303(d)(4) of the CWA and 40 CFR 122.44(l) prohibit backsliding in NPDES permits. These anti-backsliding provisions require effluent limitations in a reissued permit to be as stringent as those in the previous permit, with some exceptions where limitations may be relaxed. Effluent limitations for several constituents listed under Table B of the 2005 California Ocean Plan have been removed as a result of new information stemming from a reasonable potential analysis and is consistent with Section 402(o) of the CWA and 40 CFR 122.44(l).

4. **Monitoring and Reporting Requirements.** 40 CFR 122.48 requires that all NPDES permits specify requirements for recording and reporting monitoring results. Sections 13267 and 13383 of the CWC authorize the Regional Water Boards to require technical and monitoring reports. The Monitoring and Reporting Program (Attachment E) establishes monitoring and reporting requirements to implement federal and State requirements.

5. **Alaska Rule.** On March 30, 2000, USEPA revised its regulation that specifies when new and revised State and Tribal water quality standards (WQS) become effective for Clean Water Act (CWA) purposes (40 CFR 131.21, 65 FR 24641, April 27, 2000). Under USEPA's new regulation (also known as the Alaska rule), new and revised standards submitted to USEPA after May 30, 2000, must be approved before being used for CWA purposes. The final rule also provides that standards already in effect and submitted to USEPA by May 30, 2000, may be used for CWA purposes, whether or not approved by USEPA.

D. Impaired Water Bodies on CWA 303(d) List

On June 5 and July 25, 2003, the USEPA approved the list of impaired water bodies, prepared by the State Water Board pursuant to Section 303 (d) of the CWA, which are not expected to meet applicable water quality standards after implementation of technology-based effluent limitations for point sources. The 303 (d) list includes 1.3 miles of Pacific

Ocean shoreline extending north from the United States./Mexico Boarder, within the proximity of the SBOO as impaired for bacteria indicators. Impairment has been detected at the shoreline; however, the receiving water in the immediate vicinity of the Facility's discharge point (SBOO) is not included on the current 303 (d) list.

E. Other Plans, Polices and Regulations

1. **Secondary Treatment Regulations.** 40 CFR 133 establishes the minimum levels of effluent quality to be achieved by secondary treatment. These limitations, established by the USEPA, are incorporated into Order No. R9-2006-0067, except where more stringent limitations are required by other applicable plans, policies, or regulations.

2. **Storm Water.** Sewage treatment works with a design flow of 1.0 MGD or greater are required to comply with Water Quality Order No. 97-03-DWQ (NPDES General Permit No. CAS000001), Waste Discharge Requirements for Discharges of Storm Water Associated with Industrial Activity, Excluding Construction Activities. The Discharger shall file a Notice of Intent within 60 days of adoption of this Order (unless already submitted under the previous Order) and comply with Order No. 97-03-DWQ or the Discharger shall provide certification to the Regional Water Board that all storm water is captured and treated on-site and no storm water is discharged or allowed to run off-site from the facility.

3. **Pretreatment.** Discharges of pollutants that may interfere with operations of a POTW are regulated by USEPA's pretreatment regulations at 40 CFR 403. These regulations require Dischargers to develop and implement pretreatment programs that impose limitations on industrial users of the POTW.

IV. RATIONALE FOR EFFLUENT LIMITATIONS AND DISCHARGE SPECIFICATIONS

The CWA requires point source discharges to control the amount of conventional, non-conventional, and toxic pollutants that are discharged into the waters of the United States. The control of pollutants discharged is established through effluent limitations and other requirements in NPDES permits. There are two principal bases for effluent limitations: 40 CFR 122.44(a) requires that permits include applicable technology-based limitations and standards; and 40 CFR 122.44(d) requires that permits include water quality-based effluent limitations to attain and maintain applicable numeric and narrative water quality objectives to protect the beneficial uses of the receiving water. Where numeric water quality objectives have not been established, three options exist to protect water quality using narrative water quality objectives: 1) 40 CFR 122.44(d) specifies that Water Quality-Based Effluent Limitations (WQBELs) may be established using USEPA criteria guidance under CWA section 304(a); 2) proposed State criteria or a State policy interpreting narrative objectives supplemented with other relevant information may be used; or 3) an indicator parameter may be established.

A. Discharge Prohibitions

Prohibition A.1 of Order No. 2000-129 has been modified to clearly define what types of discharges are prohibited by this Order. The modified prohibition is contained in Section III.A of Order No. R9-2006-0067.

B. Technology-Based Effluent Limitations

1. Scope and Authority

USEPA regulations at 40 CFR Part 122.44(a)(1) require permits to include technology-based effluent limitations and standards based on limitations and standards promulgated by the USEPA authorized under Section 301 of the CWA. USEPA promulgated technology-based effluent limitations and standards for POTWs as secondary treatment regulations at 40 CFR Part 133.

2. Applicable Technology-Based Effluent Limitations

Pursuant to Sections 301 (b) (1) (B) and 304 (d) (1) of the CWA, USEPA has established standards of performance for secondary treatment at 40 CFR Part 133. Secondary treatment is defined in terms of three parameters: 5-day biochemical oxygen demand (BOD_5), total suspended solids (TSS), and pH. The following table summarizes the technology-based requirements for secondary treatment, which are applicable to SBWRP:

Table 6. Summary of Technology-Based Effluent Limitations for Secondary Treatment Facilities Established by USEPA at 40 CFR 133.102

Constituent	Monthly Avg	Weekly Avg	Percent Removal
Biochemical Oxygen Demand (BOD) (5-day @ 20 Deg. C)	30. mg/L	45. mg/L	85.
TSS	30. mg/L	45. mg/L	85.
pH	6.0 to 9.0		

Effluent limitations for the parameters BOD_5, TSS, and pH must be included in NPDES permits for POTWs; however, the parameter $CBOD_5$ (5-day carbonaceous biochemical oxygen demand) may be substituted for BOD_5 at the option of the permitting authority. BOD_5 limitations were incorporated into the Facility's discharge permit to be consistent with the Order No. 2000-129. Mass emission rate effluent limitations for BOD_5 and TSS were calculated using the maximum permitted flow rate of 15 MGD for SBWRP.

Table A of the 2005 California Ocean Plan also establishes the following technology-based effluent limitations for publicly owned treatment works:

Table 7. Summary of Technology-Based Effluent Limitations for POTWs Established by the 2005 California Ocean Plan

Constituent	Monthly Avg	Weekly Avg	Instantaneous Max	Percent Removal
Oil and Grease	25. mg/L	40. mg/L	75. mg/L	
TSS				75.[1]
Settleable Solids	1.0 mL/L	1.5 mL/L	3.0 mL/L	
Turbidity	75.	100.	225.	
pH	6.0 to 9.0			

[1] Dischargers shall, as a monthly average, remove 75% of TSS from the influent stream before discharging to the ocean, except that the effluent limitation to be met shall not be lower than 60 mg/L

The TSS percent removal requirement and standards under 40 CFR 133 are more stringent than the 2005 California Ocean Plan requirement; the more stringent TSS requirements are included in Order No. R9-2006-0067.

The technology-based effluent limitations contained in Order No. R9-2006-0067 have been carried over from Order No. 2000-129 for BOD_5, total suspended solids, settleable solids, oil and grease, turbidity, and pH.

C. Water Quality-Based Effluent Limitations (WQBELs)

1. Scope and Authority

USEPA regulations at 40 CFR 122.44 (d) (1) (i) require permits to include WQBELs for pollutants (including toxicity) that are or may be discharged at levels, which cause, have reasonable potential to cause, or contribute to an excursion above any state water quality standard. WQBELs are established in this Order based on water quality objectives contained in the 2005 California Ocean Plan and in accordance with the USEPA regulations.

2. Applicable Beneficial Uses and Water Quality Objectives

a. Basin Plan

For all ocean waters of the State, the Basin Plan and its subsequent revisions establish the beneficial uses described previously in this Fact Sheet. The Basin Plan includes the following water quality objectives for dissolved oxygen and pH in ocean waters, which have been incorporated into Order R9-2006-0067 as receiving water limitations:

1) Dissolved Oxygen. The dissolved oxygen concentration in ocean waters shall not at any time be depressed more than 10 percent from that which occurs naturally, as a result of the discharge of oxygen demanding waste materials.

2) pH. The pH of receiving waters shall not be changed at any time more than 0.2 pH units from that which occurs naturally

b. 2005 California Ocean Plan

Order No. R9-2006-0067 has been written using the guidance of the California Ocean Plan, which was most recently updated in 2005.

For all ocean waters of the State, the 2005 California Ocean Plan establishes the beneficial uses described previously in this Fact Sheet. The 2005 California Ocean Plan also includes water quality objectives for the ocean receiving water for bacterial characteristics, physical characteristics, chemical characteristics, biological characteristics, and radioactivity. A water quality objective for acute toxicity was added to the California Ocean Plan in 2001, while the acute toxicity technology-based effluent limitation contained in the 1997 California Ocean Plan was eliminated. Water quality objectives from the 1997 California Ocean Plan were included as receiving water limitations in Order No. 2000-129 and water quality objectives from the latest version of the 2005 California Ocean Plan are similarly included as receiving water limitations in Order No. R9-2006-0067.

Table B of the 2005 California Ocean Plan includes the following water quality objectives for toxic pollutants and whole effluent toxicity:

1) 6-month median, daily maximum, and instantaneous maximum objectives for 21 chemicals and chemical characteristics, including total residual chlorine and chronic toxicity, for the protection of marine aquatic life.

2) 30-day average objectives for 20 non-carcinogenic chemicals for the protection of human health.

3) 30-day average objectives for 42 carcinogenic chemicals for the protection of human health.

4) Daily maximum objectives for acute and chronic toxicity.

3. Determining the Need for WQBELs

Order No. 2000-129 contained effluent limitations for non-conventional and toxic pollutant parameters in Table B of the 1997 California Ocean Plan. For Order No. R9-2006-0067, the need for effluent limitations based on water quality objectives in Table B of the 2005 California Ocean Plan was re-evaluated in accordance with 40 CFR 122.44(d) and guidance for statistically determining the “reasonable potential” for a discharged pollutant to exceed an objective, as outlined in the revised *Technical Support Document for Water Quality-based Toxics Control* (TSD; EPA/505/2-90-001, 1991) and the 2005 California Ocean Plan Reasonable Potential Analysis (RPA) Amendment that was adopted by the State Water Board on April 21,

2005. The statistical approach combines knowledge of effluent variability (as estimated by a coefficient of variation) with the uncertainty due to a limited amount of effluent data to estimate a maximum effluent value at a high level of confidence. This estimated maximum effluent value is based on a lognormal distribution of daily effluent values. Projected receiving water values (based on the estimated maximum effluent value or the reported maximum effluent value and minimum probable initial dilution), can then be compared to the appropriate objective to determine the potential for an exceedance of that objective and the need for an effluent limitation. According to the 2005 California Ocean Plan amendment, the reasonable potential analysis (RPA) can yield three endpoints: 1) Endpoint 1, an effluent limitation is required and monitoring is required; 2) Endpoint 2, an effluent limitation is not required and the Regional Water Board may require monitoring; and 3) Endpoint 3, the RPA is inconclusive, monitoring is required, and an existing effluent limitation may be retained or a permit reopener clause may be included to allow inclusion of an effluent limitation if future monitoring warrants the inclusion. Reasonable Potential to exceed water quality objectives contained within the 2005 California Ocean Plan was determined for copper and total chlorine residual, thus effluent limitations for these parameters have been established in Order No. R9-2006-0067.

Using the RPcalc 2.0 software tool developed by the State Water Board for conducting reasonable potential analysis, and they revised dilution credit of 94.6, the Regional Water Board has determined that the constituents listed under Table XX, when discharged through Outfall 001, either do not have reasonable potential to exceed 2005 California Ocean Plan objectives (i.e., Endpoint 2), or because there is inconclusive evidence to establish reasonable potential (i.e., Endpoint 3) do not require effluent limitations. Since these constituents have been determined to have no reasonable potential to cause, or contribute to, or deviate from water quality objectives, numerical effluent limitations are not prescribed. Instead, a narrative limit statement to comply with all 2005 California Ocean Plan objectives requirements is provided. This Order includes desirable maximum effluent concentrations for constituents that do not have reasonable potential, these performance goals were derived using the effluent limitation determination procedure described below referred to as “performance goals”. The Discharger is required to monitor for these constituents as stated in the MRP (Attachment E) to gather data for use in reasonable potential analyses for future permit renewals and/or updates.

Conventional pollutants were not a part of the reasonable potential analysis. Effluent limitations for these pollutants are included in this Order as described in Section B.2 above. Effluent limitations from Order No. 2000-129 are not retained for constituents for which RPA results indicated Endpoint 3; instead performance goals have been assigned for these constituents. The MRP for this Order is designed to obtain additional information for these constituents to determine if reasonable potential exists for these constituents in future permit renewals and/or updates.

Effluent data provided in the Discharger's monitoring reports from April 2002 to December 2005 were used in the analyses. A minimum probable initial dilution of 94.6:1 was considered in this evaluation.

4. WQBEL Calculations

From the Table B water quality objectives of the 2005 California Ocean Plan, effluent limitations are calculated according to the following equation for all pollutants, except for acute toxicity (if applicable) and radioactivity:

$Ce = Co + Dm (Co – Cs)$ where,
Ce = the effluent limitation (µg/L)
Co = the water quality objective to be met at the completion of initial dilution (µg/L)
Cs = background seawater concentration
Dm = minimum probable initial dilution expressed as parts seawater per part wastewater

The effluent limitation for acute toxicity is calculated according to the following equation:

$Ce = Co + (0.1) Dm (Co – Cs)$

where all variables are as indicated above. This equation applies only when $Dm > 24$.

The Dm is based on observed waste flow characteristics, receiving water density structure, and the assumption that no currents of sufficient strength to influence the initial dilution process flow across the discharge structure.

Prior to issuance of Order No. 2000-129, the State Water Board had determined the minimum initial dilution factor, Dm, for the SBOO to be 100 to 1. This determination was based on 660 diffuser ports being open and an average daily flow rate of 174 mgd although, at the time, the total permitted flow rate through the SBOO was only 40 mgd, (i.e., 25 MGD from IWTP, and 15 MGD from SBWRP). As discussed elsewhere in this Fact Sheet, the initial dilution factor, Dm, was recalculated for this current permit renewal in order to account for the maximum permitted effluent flow through the SBOO and the current configuration of the diffuser. The new recalculated Dm was determined as 94.6 using the USEPA approved computer modeling application Visual Plumes with the UM3 model.

Initial dilution is the process that results in the rapid and irreversible turbulent mixing of wastewater with ocean water around the point of discharge. For a submerged buoyant discharge, characteristic of most municipal and industrial wastes that are released from the submarine outfalls, the momentum of the discharge and its initial buoyancy act together to produce turbulent mixing. Initial dilution in this case is

completed when the diluting wastewater ceases to rise in the water column and first begins to spread horizontally. As site-specific water quality data are not available; therefore, in accordance with Table B implementing procedures, Cs equals zero for all pollutants, except the following:

Table 8. Pollutants Having Background Concentrations

Pollutant	Background Seawater Concentration
Arsenic	3 µg/L
Copper	2 µg/L
Mercury	0.0005 µg/L
Silver	0.16 µg/L
Zinc	8 µg/L

As examples, WQBELS for copper and chlorine are determined as follows:

Water quality objectives from the 2005 California Ocean Plan are:

Table 9. Copper and Chlorine 2005 California Ocean Plan Objectives

Pollutant	6-Month Median	Daily Maximum	Instantaneous Maximum
Copper	3 µg/L	12 µg/L	30 µg/L
Total Chlorine Residual	2 µg/L	8 µg/L	60 µg/L

Using the equation, Ce = Co + Dm (Co – Cs), effluent limitations are calculated as follows before rounding to two significant digits.

<u>Copper</u>

Ce = 3 + 94.6 (3 – 2) = 98 µg/L (6-Month Median)
Ce = 12 + 94.6 (12 – 2) = 958 µg/L (Daily Maximum)
Ce = 30 + 94.6 (30 – 2) = 2,678 µg/L (Instantaneous Maximum)

<u>Total Residual Chlorine</u>

Ce = 2 + 94.6 (2 – 0) = 191.2 µg/L (6-Month Median)
Ce = 8 + 94.6 (8 – 0) = 764.8 µg/L (Daily Maximum)
Ce = 60 + 94.6 (60 – 0) = 5,736 µg/L (Instantaneous Maximum)

Based on the implementing procedures described above, effluent limitations or performance goals have been calculated for all Table B pollutants from the 2005 California Ocean Plan and incorporated into Order No. R9-2006-0067.

Because of the Reasonable Potential Analysis (RPA), many WQBELs established by Order No. 2000-129 are not retained in Order No. R9-2006-0067. The WQBELs

that are retained (copper and total chlorine residual) have been changed to reflect the revised dilution factor. Differences between the WQBELs as they are required by the current California Ocean Plan and how they are expressed in Order No. 2000-129 and/or Order No. R9-2006-0067 are described below:

a. The 1997 California Ocean Plan did not include water quality objectives for four toxic pollutants, which are included in the 2005 California Ocean Plan – chlorodibromomethane, dichlorobromomethane, N-nitrosodi-N-propylamine, and heptachlor epoxide; and therefore, effluent limitations for these pollutants were not established by Order No. 2000-129. Based on the objectives of the 2005 California Ocean Plan and a permitted discharge flow rate of 15 MGD, the following performance goals are included in Order No. R9-2006-0067.

Table 10. New Toxic Pollutants and Corresponding Performance Goals

Polluant	Units	Monthly Average
Chlorodibromomethane	µg/L	8.22E+02
	lb/day	1.03E+02
Dichlorobromomethane	µg/L	5.93E+02
	lb/day	7.41E+01
N-nitrosodi-N-propylamine	µg/L	3.63E+01
	lb/day	4.54E+00
Heptachlor epoxide	µg/L	1.91E-03
	lb/day	2.39E-04

b. For eight toxic pollutants, water quality objectives are more stringent in the 2005 California Ocean Plan than in the 1997 California Ocean Plan. The following table contains performance goals, which are based on methods and water quality objectives of the 2005 California Ocean Plan and a permitted discharge flow rate of 15 MGD. These performance goals are included in Order No. R9-2006-0067.

Table 11. Toxic Pollutant Effluent Performance Goals Based on the 2005 California Ocean Plan

Pollutant	Units	Performance Goal Monthly Average
1,1-Dichloroethylene	µg/L	8.6E+01
	lb/day	1.1E+01
Isophorone	µg/L	7.0E+04
	lb/day	8.7E+04
Tetrachloroethylene	µg/L	1.9E+02
	lb/day	2.4E+01
Thallium	µg/L	1.9E+02
	lb/day	2.4E+01
1,1,2,2-Tetrachloroethane	µg/L	2.2E+02
	lb/day	2.7E+01
1,1,2-Trichloroethane	µg/L	9.0E+02

Pollutant	Units	Performance Goal Monthly Average
	lb/day	1.1E+02
1,2-Dichloroethane	µg/L	2.7E+03
	lb/day	3.3E+02
Heptachlor	µg/L	4.8E-03
	lb/day	6.0E-04

5. Whole Effluent Toxicity (WET)

Implementing provisions at Section III. C of the 2005 California Ocean Plan require chronic toxicity monitoring for ocean waste discharges with minimum initial dilution factors below 100. Based on methods of the 2005 California Ocean Plan, a maximum daily effluent performance goal of 88 TUc for chronic toxicity has been established.

There is no requirement to monitor for acute toxicity for discharges with minimum initial dilution factors below 100; however, a requirement to monitor for acute toxicity is included to ensure that recent actions taken by the Discharger to control acute toxicity remain effective and to provide appropriate data for future RPA. The previous MRP established monthly sampling for acute toxicity. Because the data submitted to the Regional Water Board indicates that there is no reasonable potential to exceed water quality objectives for acute toxicity, this monitoring frequency has been decreased to quarterly.

Toxicity Reduction Evaluation (TRE) is a site-specific study conducted in a stepwise process designed to identify the causative agent(s) of effluent toxicity, isolate the sources of toxicity, evaluate the effectiveness of toxicity control options, and then confirm the reduction in effluent toxicity.

D. Final Effluent Limitations

The following tables list the effluent limitations established by Order No. R9-2006-0067. Where Order No. R9-2006-0067 establishes mass emission limitations, these limitations have been derived based on a flow of 15 MGD.

Table 12a. Effluent Limitations Based on Secondary Treatment

Constituent	Units	Effluent Limitations					
		Max Daily	Average Monthly	Average Weekly	Instantaneous Min	Instantaneous Max	6 Month Median
Biochemical Oxygen Demand (BOD) (5-day @ 20 Deg. C)	mg/l		30.	45.		50.	
	lb/day		3,700.	5,600.		6,200.	
	%	The average monthly percent removal shall not be less than 85 percent.					
Total Suspended Solids	mg/l		30.	45.		50.	
	lb/day		3,700.	5,600.		6,200.	

Constituent	Units	Effluent Limitations					
		Max Daily	Average Monthly	Average Weekly	Instantaneous Min	Instantaneous Max	6 Month Median
	%	The average monthly percent removal shall not be less than 85 percent.					
pH	Standard units				6.0	9.0	

Table 12b. Effluent Limitations Based on 2005 California Ocean Plan

Constituent	Units	Effluent Limitations					
		Max Daily	Average Monthly	Average Weekly	Instantaneous Min	Instantaneous Max	6 Month Median
Oil and Grease	mg/l		25.	40.		75.	
	lb/day		3,100.	5,000.		9,400.	
Settleable Solids	ml/l		1.	2.		3.	
Turbidity	NTU		75	100		225.	
Total Chlorine Residual [3]	ug/l	760.				5,700.	190.
	lb/day	96.				720.	24.
Copper, Total Recoverable	ug/l	960.				2,700.	98.
	lb/day	120.				330.	12.

E. Performance Goals

Constituents that do not have reasonable potential are listed as performance goals in this Order. The following table lists the performance goals established by Order No. R9-2006-0067. Monitoring for performance goals shall be conducted on the effluent from SBWRP prior to commingling with wastewaters from additional sources. The results will be used for informational purposes only, not compliance determination. Mass emissions have been derived for the performance goals based on a maximum permitted flow of 15 MGD. A minimum probable initial dilution factor of 94.6:1 was used in establishing the performance goals.

Table 13. Performance Goals based on 2005 California Ocean Plan

Constituent	Units	Performance Goals					
		Max Daily	Avg Monthly	Avg Weekly	Instantaneous Min	Instantaneous Max	6 Month Median
Arsenic	ug/l	2.8E+03				7.4E+03	4.8E+02
	lb/day	3.5E+02				9.2E+02	6.0E+01
Cadmium	ug/l	3.8E+02				9.6E+02	9.6E+01
	lb/day	4.8E+01				1.2E+02	1.2E+01
Chromium VI [1]	ug/l	7.6E+02				1.9E+03	1.9E+02
	lb/day	9.6E+01				2.4E+02	2.4E+01
Lead	ug/l	7.6E+02				1.9E+03	1.9E+02
	lb/day	9.6E+01				2.4E+02	2.4E+01
Mercury	ug/l	1.5E+01				3.8E+00	3.8E+01

Constituent	Units	Performance Goals					
		Max Daily	Avg Monthly	Avg Weekly	Instantaneous Min	Instantaneous Max	6 Month Median
	lb/day	1.9E+00				4.8E-01	4.8E+00
Nickel	ug/l	1.9E+03				4.8E+03	4.8E+02
	lb/day	2.4E+02				6.0E+02	6.0E+01
Selenium	ug/l	5.7E+03				1.4E+04	1.4E+03
	lb/day	7.2E+02				1.8E+03	1.8E+02
Silver	ug/l	2.5E+02				6.5E+02	5.2E+01
	lb/day	3.2E+01				8.2E+01	6.5E+00
Zinc	ug/l	6.9E+03				1.8E+04	1.1E+03
	lb/day	8.6E+02				2.3E+03	1.4E+02
Cyanide [2]	ug/l	3.8E+02				9.6E+02	9.6E+01
	lb/day	4.8E+01				1.2E+02	1.2E+01
Ammonia (as N)	ug/l	2.3E+05				5.7E+05	5.7E+04
	lb/day	2.9E+04				7.2E+04	7.2E+03
Acute Toxicity	TUa	2.9E+01					
Chronic Toxicity [4]	TUc	9.6E+01					
Phenolic Compounds (non-chlorinated)	ug/l	1.1E+04				2.9E+04	2.9E+03
	lb/day	1.4E+03				3.6E+03	3.6E+02
Chlorinated Phenolics	ug/l	3.8E+02				9.6E+02	9.6E+01
	lb/day	4.8E+01				1.2E+02	1.2E+01
Endosulfan [14]	ug/l	1.7E+00				2.6E+00	8.6E-01
	lb/day	2.1E-01				3.2E-01	1.1E-01
Endrin	ug/l	3.8E-01				5.7E-01	1.9E-01
	lb/day	5.0E-02				7.0E-02	2.0E-02
HCH	ug/l	7.6E-01				1.1E+00	3.8E-01
	lb/day	1.0E-01				1.4E-01	4.0E-02
Radioactivity [6]	- - -	Not to exceed limits specified in Title 17 California Code of Regulations Section 30253, Standards for Protection Against Radiation					
Acrolein	ug/l		2.1E+04				
	lb/day		2.6E+03				
Antimony	ug/l		1.1E+05				
	lb/day		1.4E+04				
Bis(2-Chloroethoxy) Methane	ug/l		4.2E+02				
	lb/day		5.3E+01				
Bis(2-Chloroisopropyl) Ether	ug/l		1.1E+05				
	lb/day		1.4E+04				
Chlorobenzene	ug/l		5.4E+04				
	lb/day		6.8E+03				
Chromium (III)	ug/l		1.8E+07				
	lb/day		2.3E+06				
Di-N-Butyl Phthalate	ug/l		3.3E+05				
	lb/day		4.2E+04				
Dichlorobenzenes [7]	ug/l		4.9E+05				
	lb/day		6.1E+04				

Constituent	Units	Performance Goals					
		Max Daily	Avg Monthly	Avg Weekly	Instantaneous Min	Instantaneous Max	6 Month Median
Diethyl Phthalate	ug/l		3.1E+06				
	lb/day		3.9E+05				
Dimethyl Phthalate	ug/l		7.8E+07				
	lb/day		9.8E+06				
4,6-Dinitro-2-Methylphenol	ug/l		2.1E+04				
	lb/day		2.6E+03				
2,4-Dinitrophenol	ug/l		3.8E+03				
	lb/day		4.8E+02				
Ethylbenzene	ug/l		3.9E+05				
	lb/day		4.9E+04				
Fluoranthene	ug/l		1.4E+03				
	lb/day		1.8E+02				
Hexachlorocyclo-Pentadiene	ug/l		5.5E+03				
	lb/day		6.9E+02				
Nitrobenzene	ug/l		4.7E+02				
	lb/day		5.9E+01				
Thallium	ug/l		1.9E+02				
	lb/day		2.4E+01				
Toluene	ug/l		8.1E+06				
	lb/day		1.0E+06				
Tributyltin	ug/l		1.3E-01				
	lb/day		2.0E-02				
1,1,1-Trichloroethane	ug/l		5.2E+07				
	lb/day		6.5E+06				
Acrylonitrile	ug/l		9.6E+00				
	lb/day		1.2E+00				
Aldrin	ug/l		2.1E-03				
	lb/day		2.6E-04				
Benzene	ug/l		5.6E+02				
	lb/day		7.1E+01				
Benzidine	ug/l		6.6E-03				
	lb/day		8.2E+04				
Beryllium	ug/l		3.1E+00				
	lb/day		3.9E-01				
Bis(2-Chloroethyl) Ether	ug/l		4.3E+00				
	lb/day		5.4E-01				
Bis(2-Ethlyhexyl) Phthalate	ug/l		3.3E+02				
	lb/day		4.2E+01				
Carbon Tetrachloride	ug/l		8.6E+01				
	lb/day		1.1E+01				
Chlordane [8]	ug/l		2.2E+03				
	lb/day		2.7E-04				
Chlorodibromomethane	ug/l		8.2E+02				
	lb/day		1.0E+02				
Chloroform	ug/l		1.2E+04				
	lb/day		1.5E+03				
DDT [9]	ug/l		1.6E-02				
	lb/day		2.0E-03				
1,4-Dichlorobenzene	ug/l		1.7E+03				

Constituent	Units	Performance Goals					
		Max Daily	Avg Monthly	Avg Weekly	Instantaneous Min	Instantaneous Max	6 Month Median
	lb/day		2.1E+02				
3,3'-Dichlorobenzidine	ug/l		7.7E-01				
	lb/day		9.7E-02				
1,2-Dichloroethane	ug/l		2.7E+03				
	lb/day		3.3E+02				
1,1-Dichloroethylene	ug/l		8.6E+01				
	lb/day		1.1E+01				
Dichlorobromomethane	ug/l		5.9E+02				
	lb/day		7.4E+01				
Dichloromethane	ug/l		4.3E+04				
	lb/day		5.4E+03				
1,3-Dichloropropene	ug/l		8.5E+02				
	lb/day		1.1E+02				
Dieldrin	ug/l		3.8E-03				
	lb/day		4.8E-04				
2,4-Dinitrotoluene	ug/l		2.5E+02				
	lb/day		3.1E+01				
1,2-Diphenylhydrazine	ug/l		1.5E+01				
	lb/day		1.9E+00				
Halomethanes [10]	ug/l		1.2E+04				
	lb/day		1.5E+03				
Heptachlor	ug/l		4.8E-03				
	lb/day		6.0E-04				
Heptachlor Epoxide	ug/l		1.9E-03				
	lb/day		2.4E-04				
Hexachlorobenzene	ug/l		2.0E-02				
	lb/day		2.5E-03				
Hexachlorobutadiene	ug/l		1.3E+03				
	lb/day		1.7E+02				
Hexachloroethane	ug/l		2.4E+02				
	lb/day		3.0E+01				
Isophorone	ug/l		7.0E+04				
	lb/day		8.7E+03				
N-Nitrosodimethylamine	ug/l		7.0E+02				
	lb/day		8.7E+01				
N-Nitrosodi-N-Propylamine	ug/l		3.6E+01				
	lb/day		4.5E+00				
N-Nitrosodiphenylamine	ug/l		2.4E+02				
	lb/day		3.0E+01				
PAHs [11]	ug/l		8.4E-01				
	lb/day		1.1E-01				
PCBs [12]	ug/l		1.8E-03				
	lb/day		2.3E-04				
TCDD Equivalents [13]	ug/l		3.7E-07				
	lb/day		4.7E-08				
1,1,2,2-	ug/l		2.2E+02				

Constituent	Units	Performance Goals					
		Max Daily	Avg Monthly	Avg Weekly	Instantaneous Min	Instantaneous Max	6 Month Median
Tetrachloroethane	lb/day		2.7E+01				
Tetrachloroethylene	ug/l		1.9E+02				
	lb/day		2.4E+01				
Toxaphene	ug/l		2.0E-01				
	lb/day		2.5E-03				
Trichloroethylene	ug/l		2.6E+03				
	lb/day		3.2E+02				
1,1,2-Trichloroethane	ug/l		9.0E+02				
	lb/day		1.1E+02				
2,4,6-Trichlorophenol	ug/l		2.8E+01				
	lb/day		3.5E+00				
Vinyl Chloride	ug/l		3.4E+03				
	lb/day		4.3E+02				

[1] Scientific "E" notation is used to express certain values. In scientific "E" notation, the number following the "E" indicates the position of the decimal point in the value. Negative numbers after the "E" indicate that the value is less than 1, and positive numbers after the "E" indicate that the value is greater than 1. In this notation a value of 6.1E−02 represents a value of 6.1×10^{-2} or 0.061, 6.1E+2 represents 6.1×10^{2} or 610, and 6.1E+00 represents 6.1×10^{0} or 6.1.
[2] Dischargers may, at their option, meet this limitation (or apply this performance goal) as a total chromium limitation (or performance goal).
[3] If a Discharger can demonstrate to the satisfaction of the Regional Water Board (subject to USEPA approval) that an analytical method is available to reliably distinguish between strongly and weakly complexed cyanide, effluent limitations for cyanide may be met by (or performance goals may be evaluated with) the combined measurement of free cyanide, simple alkali metal cyanides, and weakly complexed organometalic cyanide complexes. In order for the analytical method to be acceptable, the recovery of free cyanide from metal complexes must be comparable to that achieved by the approved method in 40 CFR 136, as revised May 14, 1999.
[4] Chronic toxicity expressed as Chronic Toxicity Units (TUc) = 100 / NOEL, where NOEL (No Observed Effect Level) is expressed as the maximum percent effluent or receiving water that causes no observable effect on a test organism.
[5] HCH (hexachlorocyclohexane) represents the sum of the alpha, beta, gamma (lindane), and delta isomers of hexachlorocyclohexane.
[6] Not to exceed limits specified in Title 17 CCRs, Section 30253, Standards for Protection Against Radiation. Reference to Section 30253 is prospective, including future changes to any incorporated provisions of federal law, as the changes take effect.
[7] Dichlorobenzenes represent the sum of 1,2- and 1,3-dichlorobenzene.
[8] Chlordanes represent the sum of chlordane-alpha, chlordane-gamma, chlordene-alpha, chlordene-gamma, nonachlor-alpha, nonachlor-gamma, and oxychlordane.
[9] DDD (dichlorodiphenyldichloroethane), DDE (dichlorodiphenyldichloroethylene), and DDT (dichlorodiphenyltrichloroethane) represent the sum of 4,4'DDT; 2,4'DDT; 4,4'DDE; 2,4'DDE; 4,4'DDD; and 2,4'DDD.
[10] Halomethanes represent the sum of bromoform, bromomethane (methyl bromide), and chloromethane (methyl chloride).
[11] PAHs (polynuclear aromatic hydrocarbons) represent the sum of acenapthalene, anthracene, 1,2-benzanthracene, 3,4-benzofluoranthene, benzo[k]fluoranthene, 1,1,2-benzoperylene, benzo[a]pyrene, chrysene, dibenzo[ah]anthracene, fluorene, indeno[1,2,3-cd]pyrene, phenanthrene, and pyrene.

[12] PCBs (polychlorinated biphenyls) represent the sum of chlorinated biphenyls whose analytical characteristics resemble those of Aroclor-1016, Aroclor-1221, Aroclor-1232, Aroclor-1242, Aroclor-1248, Aroclor-1254, and Aroclor-1260.
[13] TCDD equivalents represent the sum of concentrations of chlorinated dibenzodioxins (2,3,7,8-CDDs) and chlorinated dibenzofurans (2,3,7,8-CDFs) multiplied by their respective toxicity factors, as shown by the table, below. EPA Method 8280 may be used to analyze TCDD equivalents.

Isomer Group	Toxicity Equivalence Factor
2,3,7,8 - tetra CDD	1.0
2,3,7,8 - penta CDD	0.5
2,3,7,8 - hexa CDD	0.1
2,3,7,8 - hepta CDD	0.01
octa CDD	0.001
2,3,7,8 - tetra CDF	0.1
1,2,3,7,8 - penta CDF	0.05
2,3,4,7,8 - penta CDF	0.5
2,3,7,8 - hexa CDFs	0.1
2,3,7,8 - hepta CDFs	0.01
octa CDF	0.001

[14] Endosulfan shall mean the sum of alpha-endosulfan, beta-endosulfan, and endosulfan sulfate.

Performance goals serve to maintain existing treatment levels and effluent quality and supports State and federal antidegradation policies. Additionally, performance goals provide all interested parties with information regarding the expected levels of pollutants in the discharge that should not be exceeded in order to maintain the water quality objectives established in the 2005 California Ocean Plan. Performance goals are not limitations or standards for the regulation of the discharge. Effluent concentrations above the performance goals will not be considered as violations of the permit but serve as red flags that indicate water quality concerns. Repeated red flags may prompt the Regional Water Board to reopen and amend the permit to replace performance goals for constituents of concern with effluent limitations, or the Regional Water Board may coordinate such actions with the next permit renewal.

F. Antidegradation

Waste Discharge Requirements for the City of San Diego's discharge through the SBOO must conform with federal and state antidegradation policies provided at 40 CFR 131.12 and in State Board Resolution No. 68-16, *Statement of Policy with Respect to Maintaining High Quality of Waters in California*. The antidegradation policies require that beneficial uses and the water quality necessary to maintain those beneficial uses in the receiving waters of the discharge shall be maintained and protected, and, if existing water quality is better than the quality required to maintain beneficial uses, the existing water quality shall be maintained and protected unless allowing a lowering of water quality is necessary to accommodate important economic and social development or consistent with maximum benefit to the people of California. When a significant lowering of water quality is allowed by the Regional Water Board, an antidegradation analysis is required in accordance with the State Water Board's Administrative

Procedures Update (July 2, 1990), Antidegradation Policy Implementation for NPDES Permitting.

1. Technology-based Effluent Limitations
   The technology-based standards for POTW performance are promulgated at 40 CFR 133 expressed as 30-day averages and 7-day averages for BOD, CBOD and TSS. In the previous NPDES permit for the SBWRP (Order No. 2000-129), these standards were incorporated as "Monthly Average (30-day)" and "Weekly Average (7-day)" effluent limitations for BOD and TSS which were enforced by the Regional Water Board as running averages. To comply with 40 CFR 122.45, which requires that effluent limitations be expressed as average weekly and average monthly limitations for POTWs, the BOD and TSS standards have been revised in this current permit as Average Monthly Effluent Limitations (AMEL) and Average Weekly Effluent Limitations (AWEL) that are numerically equal to the previous effluent limitations. As explained in the Compliance Determination section of this Order, compliance with the AMEL and AWEL will be determined by considering the average of sampling results within a calendar month or calendar week, respectively, rather than as running averages. As also further explained in the Compliance Determination section of this Order, a violation of the AMEL or the AWEL would result in a violation for each day of the calendar month or calendar week, respectively. Consequently, the AMEL and AWEL are expected to provide a similar level of incentive for POTWs to operate treatment facilities to be in compliance at all times as the previous "Monthly Average (30-day)" and "Weekly Average (7-day)" running average effluent limitations. The conversion of the BOD and TSS effluent limitations to AMEL and AWEL are not expected to cause a change in the physical nature of the effluent discharged and are not expected to impact beneficial uses nor cause a reduction of the water quality of the receiving water. For these reasons, the Regional Water Board has determined that an antidegradation analysis is not required to consider the possible impacts resulting from the BOD and TSS AMELs and AWELs.

2. Water Quality-based Effluent Limitations
   The water quality-based effluent limitations contained in this Order have been modified from previous NPDES permits for the SBWRP, including Order No. 2000-129, due to a recalculation of the ocean outfall initial dilution factor and removal of effluent limitations after a reasonable potential analysis. In accordance with the State Water Board's Administrative Procedures Update, the Regional Water Board assessed the potential impact of the modified effluent limitations on existing water quality and the need for an antidegradation analysis as follows:

   a. Recalculation of Ocean Outfall Initial Dilution Factor and Flow rate Increase
      As discussed elsewhere in this Fact Sheet, the initial dilution factor, Dm, was recalculated for this current permit renewal to account for the current configuration of the SBOO. The new recalculated Dm of 94.6, which is based on the total permitted flow rate of the International Wastewater Treatment Plant (25 MGD) and the SBWRP (15 MGD) for a total permitted flow of 40 MGD to the

SBOO, is a decrease over the previous permit's Dm of 100. The new Dm results in more stringent effluent limitations for copper, total residual chlorine, and chronic toxicity. Historical data submitted by the Discharger to the Regional Water Board indicates that the Discharger is capable of maintaining compliance with the new effluent limitations upon the adoption of this Order and without a compliance schedule.

b. Removal of effluent limitations after a reasonable potential analysis
Effluent limitations were not included in this Order for constituents for which reasonable potential to exceed the water quality objective was not indicated following a reasonable potential analysis although the previous permit included effluent limitations for those constituents. The procedures for conducting the reasonable potential analysis are explained elsewhere in this Fact Sheet. For constituents for which effluent limitations were not included, non-regulatory performance goals were included which will indicate the level of discharge at which possible water quality impacts may be significant. The removal of effluent limitations by itself is not expected to cause a change in the physical nature of the effluent discharged and is not expected to impact beneficial uses nor cause a reduction of the water quality of the receiving water. Coupled with the inclusion of performance goals and retention of the monitoring program for constituents without effluent limitations, the existing water quality is expected to be maintained. For these reasons, the Regional Water Board has determined that an antidegradation analysis is not required to consider the possible impacts resulting from the removal of effluent limitations following a reasonable potential analysis.

V. RATIONALE FOR RECEIVING WATER LIMITATIONS

Receiving water limitations of Order No. R9-2006-0067 are derived from the water quality objectives for ocean waters established by the 1994 Basin Plan and the 2005 California Ocean Plan.

VI. RATIONALE FOR MONITORING AND REPORTING REQUIREMENTS

Section 122.48 of 40 CFR requires all NPDES permits to specify recording and reporting of monitoring results. Sections 13267 and 13383 of the California Water Code authorize the Regional Water Boards to require technical and monitoring reports. The Monitoring and Reporting Program, Attachment E of this Order, establishes monitoring and reporting requirements to implement federal and state requirements. The following provides the rationale for the monitoring and reporting requirements contained in the Monitoring and Reporting Program for this Facility.

A. Influent Monitoring

Influent monitoring is required to determine compliance with NPDES permit conditions; assess treatment plant performance; and assess the performance of the Industrial Pretreatment Program and Toxic Control Program. Influent monitoring in Order No. R9-2006-0067 is unchanged from Order No. 2000-129. These monitoring requirements are summarized in the following table.

Table 16. Influent Monitoring Requirements

Constituent	Units	Sample Type	Sampling Frequency
Flow	MGD	recorder / totalizer	continuous
Biochemical Oxygen Demand (BOD) (5-day @ 20 Deg. C)	mg/L	24 hr composite	weekly
TSS	mg/L	24 hr composite	weekly
Arsenic	ug/L	24 hr composite	monthly
Cadmium	ug/L	24 hr composite	monthly
Copper	ug/L	24 hr composite	monthly
Chromium (VI)	ug/L	24 hr composite	monthly
Cyanide	ug/L	24 hr composite	monthly
Lead	ug/L	24 hr composite	monthly
Mercury	ug/L	24 hr composite	monthly
Nickel	ug/L	24 hr composite	monthly
Silver	ug/L	24 hr composite	monthly
Zinc	ug/L	24 hr composite	monthly

Influent monitoring for BOD_5 and TSS allows determination of removal efficiencies, which are limited by Order No. R9-2006-0067.

B. Effluent Monitoring

In an effort to standardize monitoring and reporting requirements and in order to support electronic data submittal of Discharger Self-Monitoring Reports, reporting units, definitions, and deadlines specified in the Monitoring and Reporting Program (MRP) for Order No. R9-2006-0067 have been written in accordance with the State Water Resource Control Board's Water Quality Permit Standards Team Final Report.

Effluent monitoring requirements of MRP No. R9-2006-0067 (Attachment E) provides greater detail regarding specific monitoring requirements.

Order No. R9-2006-0067 decreases the monitoring frequency for acute toxicity from monthly to quarterly. Further, monitoring requirements for chlorodibromomethane, dichlorobromomethane, N-nitrosodi-N-propylamine, and heptachlor epoxide have been established to determine compliance with performance goals and to collect data for future RPAs. The remaining effluent monitoring requirements from Order No. 2000-129 are retained by MRP No. R9-2006-0067.

C. Whole Effluent Toxicity Testing Requirements

Implementing provisions at Section III.C.3.c of the 2005 California Ocean Plan require chronic toxicity monitoring for ocean waste discharges with minimum initial dilution factors below 100. A dilution factor of 94.6 has been established for this discharge, thus chronic toxicity monitoring has been established for this discharge.

There is no requirement to monitor for acute toxicity for discharges with minimum initial dilution factors below 100; however, a requirement to monitor for acute toxicity is included to ensure that recent actions taken by the Discharger to control acute toxicity remain effective and to provide appropriate data for future RPA. The previous MRP established monthly sampling for acute toxicity. Because the data submitted to the Regional Water Board indicates that there is no reasonable potential to exceed water quality objectives for acute toxicity, this monitoring frequency has been decreased to quarterly.

The Discharger shall conduct acute and chronic toxicity testing on 24-hour composite effluent samples collected at Effluent Monitoring Station E-001, as defined in Section II of the MRP (Attachment E). Acute toxicity is required to be monitored quarterly. Chronic toxicity is required to be monitored monthly.

Acute toxicity testing shall be performed using either a marine fish or invertebrate species in accordance with procedures established by the USEPA guidance manual, Methods for Measuring the Acute Toxicity of Effluents and Receiving Waters to Freshwater and Marine Organisms, 5th Edition, October 2002 (EPA-821-R-02-012).

Critical life stage toxicity tests shall be performed to measure chronic toxicity (TUc). Testing shall be performed using methods outlined in *Short-Term Methods for Estimating the Chronic Toxicity of Effluents and Receiving Waters to West Coast Marine and Estuarine Organisms* (Chapman, G.A., D.L. Denton, and J.M. Lazorchak, 1995) or *Procedures Manual for Conducting Toxicity Tests Developed by the Marine Bioassay Project* (SWRCB, 1996)

A screening period for chronic toxicity shall be conducted every other year for three months, using a minimum of three test species with approved test protocols, from the following list (from the 2005 California Ocean Plan). Other tests may be used, if they have been approved for such testing by the State Water Board. The test species shall include a fish, an invertebrate, and an aquatic plant. After the screening period, the most sensitive test species shall be used for the monthly testing. Repeat screening periods may be terminated after the first month if the most sensitive species is the same as found previously to be most sensitive. Dilution and control water should be obtained from an unaffected area of the receiving waters. The sensitivity of the test organisms to a reference toxicant shall be determined concurrently with each bioassay test and reported with test results.

D. Land Outfall Monitoring

Combined effluent monitoring is established to determine the pollutant concentrations in the combined effluent discharged through the SBOO and evaluate the potential of the combined effluent to negatively impact the receiving water.

Although the effluent limitations listed in Section IV of the Order do not apply to the combined effluent, the combined effluent from the IWTP and the SBWRP shall also be monitored quarterly. Samples shall be collected from the effluent of each plant and combined in the laboratory in accordance with a ratio that is proportional to the flow from each plant. The monitored parameters shall be the same as for the effluent monitoring program except that acute and chronic toxicity testing shall use the most sensitive species as determined by screening tests of the combined effluent. Additional information regarding land outfall monitoring is in Section V of MRP No. R9-2006-0067.

E. Receiving Water Monitoring

Receiving water monitoring outlined in this Order should be based upon the most recent COP, which is currently the 2005 COP; however, in cases where SBWRP requirements supported by the 2005 COP create an inconsistency in MRP activities for IWTP requirements supported by the 2001 COP, the 2001 COP will be considered for SBWRP/IWTP MRP activities. Ultimately, the IWTP and SBWRP MRPs will be updated together to reflect the most recent COP.

1. Shore Water Quality Monitoring

   To assess bacteriological conditions in areas used for body contact activities and where shellfish and/or kelp may be harvested, and to assess aesthetic conditions for general boating and recreational uses, MRP No. R9-2006-0067 carries over monitoring requirements from the previous Order at 11 shore locations for total and fecal coliform and enterococcus bacteria in surface samples on a year-round, weekly basis. Additional shore water quality monitoring requirements are contained in Section VII.A of the MRP.

2. Offshore Water Quality Monitoring

   To determine compliance with water quality objectives of the 2005 California Ocean Plan and to determine if discharges cause significant impacts to water quality within the zone of initial dilution, and beyond the zone of initial dilution, MRP No. R9-2006-0067 establishes monthly monitoring at 40 off shore locations for temperature, pH, salinity, dissolved oxygen, and transmissivity. MRP No. R9-2006-0067 requires monitoring for total and fecal coliform and enterococcus bacteria in surface and mid-depth samples at 15 offshore locations on a year-round, monthly basis. In addition, monthly monitoring for oil and grease, and TSS is established at 27 offshore locations on a year-round, monthly basis. Additional offshore water quality monitoring requirements are contained in Section VII.B of the MRP.

F. Fish Monitoring

1. Demersal Fish and Macroinvertebrate Monitoring

   Quarterly fish trawls shall be conducted to assess the community structure of demersal fish and macroinvertebrates and the presence of priority pollutants in fish. Additional fish trawl monitoring requirements are specified in Section VII.C of the MRP.

2. Rig Fishing

   Semiannual rig fishing shall be performed to monitor the uptake of pollutants in fish, which are consumed by humans to determine the impact on public health, and to assess the impacts on local fish populations. Additional rig fishing monitoring requirements are specified in Section VII.C of the MRP.

G. Other Monitoring Requirements

1. Benthic Monitoring

   To assess the status of the benthic community and to evaluate the physical and chemical quality of sediments in the receiving water, Order No. R9-2006-0067 continues the semiannual benthic monitoring required in the current Order.

   a. Sediment Sampling and Analyses

      Semiannual sediment sampling for various parameters, from 27 sampling stations has been carried over to the Order from the current Order. Sediment sampling requirements are specified in Section VII.D of the MRP.

   b. Infauna

      Semiannual benthic infaunal sampling at 27 sampling stations has been carried over to tentative Order No. R9-2006-0067 from the current Order. Infaunal sampling requirements are specified in Section VII.D of the MRP.

3. Solids Monitoring

   Solids monitoring has been established in the Order to determine compliance with solids handling regulations specified in Part IV.C.5 of the Order No. R9-2006-0067.

   The Discharger shall report, annually, the volume of screenings, sludges, grit, and other solids generated and/or removed during wastewater treatment and the locations where these waste materials are placed for disposal.

4. Kelp Bed Monitoring

To assess the extent to which the discharge of wastes may affect the areal extent and health of coastal kelp beds, Order No. R9-2006-0067 requires the Discharger to participate with other ocean Dischargers in the San Diego Region in an annual regional kelp bed photographic survey.

Order and MRP No. R9-2006-0067 retain the requirements of Order No. 2000-129 for kelp bed monitoring.

5. Intensive Monitoring

The Discharger shall perform the intensive monitoring as described by MRP No. R9-2006-0067 and participate in the Southern California Coastal Water Research Project (SCCWRP) Bight Study.

VII. RATIONALE FOR PROVISIONS

A. Standard Provisions

Standard Provisions, which in accordance with 40 CFR 122.41and 122.42, apply to all NPDES discharges and must be included in every NPDES permit, are provided in Attachment D to the Order.

B. Special Provisions

1. Re-opener Provisions

Order No. R9-2006-0067 may be re-opened and modified, revoked, and reissued or terminated in accordance with the provisions of 40 CFR Parts 122, 123, 124, and 125. The Regional Water Board may reopen the permit to modify permit conditions and requirements. Causes for modifications include the promulgation of new regulations, modification in sludge use or disposal practices, or adoption of new regulations by the State Water Board or Regional Water Board, including revisions to the Basin Plan.

2. Special Studies and Additional Monitoring Requirements

a. Treatment Plant Capacity

Order No. R9-2006-0067 establishes a requirement for a treatment plant capacity study to serve as an indicator for the Regional Water Board of the Facility's increasing hydraulic capacity and growth in the service area.

b. Spill Prevention and Response Plans

Sanitary sewer overflows consist of varying mixtures of domestic sewage, industrial wastewater, and commercial wastewater. This mixture depends on the pattern of land use in the sewage collection system tributary to the overflow. The chief causes of sanitary sewer overflows include grease blockages, root blockages, debris blockages, sewer line flood damage, manhole structure failures, vandalism, pump station mechanical failures, power outages, storm or groundwater inflow/infiltration, lack of capacity, and contractor caused blockages. Sanitary sewer overflows often contain high levels of suspended solids, pathogenic organisms, toxic pollutants, nutrients, oxygen demanding organic compounds, oil and grease, and other pollutants. Sanitary sewer overflows can cause temporary exceedances of applicable water quality objectives, pose a threat to public health, adversely affect aquatic life, and impair the public recreational use and aesthetic enjoyment of surface waters in the area. The Discharger is expected to take all necessary steps to adequately maintain and operate its sanitary sewer collection system. Order No. R9-2006-0067 requires the Discharger to prepare and implement a Sewer Overflow Prevention Plan (SPP) and a Sewer Overflow Response Plan (SRP). Order No. R9-2006-0067 defines what types of spills are reportable to the Regional Water Board under this Order and what types (such as sanitary sewer overflows) are covered under other existing Orders.

c. Sanitary Sewer System and Sanitary Sewer Overflow Reporting

To help the Regional Water Board determine the Dischargers compliance with the SPP and SRP, and help the Regional Water Board access the effects of sewage spills and overflows on the receiving water(s), the Discharger is required to report sanitary sewer overflows from the sanitary sewer system owned and operated by the Discharger in accordance with Monitoring and Reporting Program No. 96-04, Sanitary Sewer Overflow Reporting Procedures for Sewage Collection Agencies, incorporated by reference into Order No. R9-2006-0067.

d. Pretreatment Program

Pursuant to CFR Part 403, pretreatment requirements established in Order No. 2000-129 remain applicable to this facility and have been retained by this Order. By March 1 of each year, the Discharger shall submit an annual report to: the Regional Water Board; the USEPA, Region 9; the State Water Board, Division of Water Quality, Regulatory Unit; and the San Diego County Department of Environmental Health, Hazardous Materials Management Division, describing the Discharger's pretreatment activities over the previous calendar year.

e. Single Operational Upset

A single operational upset (SOU) that leads to simultaneous violations of more than one pollutant parameter shall be treated as a single violation and limits the Discharger's liability in accordance with Part VII.P of Order No. R9-2006-0067:

1) The term "upset" has broad and narrow definitions in *Attachment A – Definitions* because the term is used both to refer to an "upset" in the general sense as any malfunction or operational failure at a treatment facility and also in a more specific sense to refer to an "upset" as defined at 40 CFR 122.41 (n). The determination that the term "upset" has broad and narrow definitions is discussed further below.

2) Regulatory Upset Defense.
Provision 8 of *Attachment D – Standard Provisions* addresses the use of the regulatory upset defense to completely relieve dischargers of liability for violations under specific situations. According to the US EPA Memorandum "Issuance of Guidance Interpreting Single Operational Upset" (September 27, 1989), upset events that fit the definition of "upset" under 40 CFR 122.41 (n) "provide those who violate technology-based effluent limitations . . . with an affirmative defense to allegations of permit noncompliance, if the exceedance results from an exceptional, unintentional incident which is beyond the control of the party who discharges in violation of his permit. A party who successfully claims upset is not legally liable for the exceedances at issue, and has not violated the (Clean Water Act), his NPDES permit, or categorical pretreatment standards." 40 CFR 122.41 (n) states that the regulatory upset defense does not apply to those events caused by operational error, improperly designed treatment facilities, lack of preventive maintenance, or careless or improper operation. Provision 8 of Attachment D specifies the conditions that the Discharger must satisfy to claim the regulatory upset defense.

3) Single Operational Upset Defense.
Compliance Determination Section VII.Q of Order No. R9-2006-0067 addresses how a Discharger may be able to limit his liability in the event of a single operational upset (SOU) resulting in multiple violations. The USEPA Memorandum "Issuance of Guidance Interpreting Single Operational Upset" (September 27, 1989) provides the necessary regulatory guidance in case of SOU except for purposes of California Water Code Section 13385 (h) and (i). The US EPA SOU guidance memo spells out that multiple violations due to an SOU are treated as one violation for each day only. For example, an SOU that results in multiple violations each day over a period of seven days will result in counting seven violations because the multiple violations on each of the seven days are treated as one violation for each day only. If the State or Regional Water Board is taking enforcement in accordance with CWC 13385 (h) and (i), commonly referred to as Mandatory Minimum Penalties, CWC Section 13385 (f)(2) expands a POTW discharger's ability to limit liability in the case of an SOU by allowing all violations that occur within a 30-day period, instead of each day, due to an SOU to be counted as one violation.

The regulatory upset defense completely relieves a discharger of all liability

for violations of technology-based effluent limitations but not in cases where the violations are caused by operator error. In contrast, according to the US EPA SOU guidance memo, the SOU defense serves to only limit a discharger's liability for violations but applies to both technology-based and water quality-based effluent limitations even if caused by unknowing and unintentional operator error. For purposes of Mandatory Minimum Penalties in accordance with CWC Section 13385 (f)(2), the SOU defense does not apply when the upset was caused by operator error.

The effect of CWC Section 13385 (f)(2) on reducing a POTW discharger's liability is illustrated in the following example:

> A POTW discharged 20,000 gallons of treated effluent each day over two days, and the effluent quality exceeded the concentration effluent limitations and the mass emission rate limitations of the POTW's NPDES permit for iron and copper on both days. The POTW reported to the Regional Water Board that despite its best efforts, increased filamentous bacteria growth in the aeration tank due to a single operational upset resulted in a slight reduction in settling in the secondary clarifier which in turn resulted in the increased iron and copper content of the effluent. The Regional Water Board determined that four serious violations occurred on each day for a total of eight serious violations over the two days due to a single operational upset. Taking the SOU defense into account according to USEPA guidance, the Regional Water Board would determine that the four violations on each day collapse to one violation on each day and the POTW can be civilly liable for up to $10,000 per day of violation plus up to $10 per gallon discharged over 1,000 gallons [in accordance with CWC Section 13385 (c)] for a total possible maximum civil liability of $410,000 (i.e., $20,000 for two days of violations and $390,000 for the 39,000 gallons discharged over the initial 1,000 gallons). However, if the Regional Water Board determines mandatory minimum penalties in accordance with CWC Sections 13385 (h) and (i), the Regional Water Board must also consider the SOU defense in accordance with CWC Section 13385 (f)(2). In that case, the eight serious violations collapse to one violation with a Mandatory Minimum Penalty of $3,000.

4) Twenty-four Hour Reporting for Upsets.
Provision E.5(b)(2) of *Attachment D – Standard Provisions* requires that "any upset that exceeds any effluent limitation in this Order" must be reported within 24 hours from the time the discharger becomes aware of the circumstances. This standard provision is authorized at 40 CFR 122.41(l)(6)(ii)(B) and is interpreted to require reporting of any upset, in the broad sense, that results in an exceedance of any effluent limitation. The term "upset" in this provision cannot be limited to the meaning of the term "upset" within 40 CFR 122.41 (n), which only applies to exceedances of technology-based effluent limitations, and must be interpreted broadly

because an "upset", in the broad sense, can result in exceedance of water quality-based effluent limitations. Therefore, this provision also applies to the reporting of single operational upsets.

VIII. PUBLIC PARTICIPATION

The California Regional Water Quality Control Board, San Diego Region (Regional Water Board) is considering the issuance of waste discharge requirements (WDRs) that will serve as a National Pollutant Discharge Elimination System (NPDES) permit for the City of San Diego. As a step in the WDR adoption process, the Regional Water Board staff has developed tentative WDRs. The Regional Water Board encourages public participation in the WDR adoption process.

A. Notification of Interested Parties

The Regional Board notified the Discharger and interested agencies and persons of its intent to prescribe waste discharge requirements for the discharge and provided them with an opportunity to submit their written comments and recommendations. In anticipation of presenting the tentative order to the Regional Board on June 14, 2006, notification was provided through publication in the San Diego Union-Tribune newspaper on May 5, 2006 and by letters mailed to interested parties on May 8, 2006.

The item was subsequently postponed and rescheduled for the November 8, 2006 Regional Board meeting. The rescheduled permit hearing notice was published in the San Diego Union-Tribune newspaper on October 2, 2006.

B. Written Comments

The staff determinations are tentative. Interested persons are invited to submit written comments concerning tentative WDRs. Comments should be submitted either in person or by mail to the Executive Office at the Regional Water Board at the address above on the cover page of this Order.

To be fully responded to by staff and considered by the Regional Water Board, written comments should be received at the Regional Board office by 5:00 p.m. on November 1, 2006.

C. Public Hearing

The Regional Water Board will hold a public hearing on the tentative WDRs during its regular Board meeting on the following date and time and at the following location:

Date: November 8, 2006
Time: 9:00 am
Location: Regional Water Quality Control Board, San Diego

9174 Sky Park Court Suite 100
San Diego, CA 92123

Interested persons are invited to attend. At the public hearing, the Regional Water Board will hear testimony, if any, pertinent to the discharge, WDRs, and permit. Oral testimony will be heard; however, for accuracy of the record, important testimony should be in writing.

Please be aware that dates and venues may change. Our web address is **http://www.waterboards.ca.gov/sandiego** where you can access the current agenda for changes in dates and locations.

D. Waste Discharge Requirements Petitions

Any aggrieved person may petition the State Water Resources Control Board to review the decision of the Regional Water Board regarding the final WDRs. The petition must be submitted within 30 days of the Regional Water Board's action to the following address:

State Water Resources Control Board
Office of Chief Counsel
P.O. Box 100, 1001 I Street
Sacramento, CA 95812-0100

E. Information and Copying

The Report of Waste Discharge (RWD), related documents, tentative effluent limitations and special provisions, comments received, and other information are on file and may be inspected at the address above at any time between 8:30 a.m. and 4:45 p.m., Monday through Friday. Copying of documents may be arranged through the Regional Water Board by calling 858-467-2952.

F. Register of Interested Persons

Any person interested in being placed on the mailing list for information regarding the WDRs and NPDES permit should contact the Regional Water Board, reference this facility, and provide a name, address, and phone number.

G. Additional Information

Requests for additional information or questions regarding this Order should be directed to Melissa Valdovinos at (858) 467-2724.

ATTACHMENT G – DILUTION MODEL INFORMATION

The dilution model used to determine the dilution factor of the South Bay Ocean Outfall (SBOO) was USEPA-approved computer modeling application Visual Plumes (UM3 Model). The USEPA Visual Plumes website is located at <http://www.epa.gov/ceampubl/swater/vplume/index.htm>. The dilution model results are summarized in Table G.1 below.

Table 1: Summary of Visual Plumes dilution model results.

Ambient Profile[1]	Effluent Temperature (°C)	Dilution Factor at last Trap level	Dilution Factor at Surface
January	17.5[2]	159.0	159.0
February	17.5[2]	159.0	159.0
March	17.5[2]	123.2	142.9
April	17.5[2]	108.2	No result
May	17.5[2]	94.6	No result
June	17.5[2]	110.1	No result
July	17.5[2]	109.1	No result
August	17.5[2]	108.0	No result
September	17.5[2]	108.6	No result
October	17.5[2]	114.3	130.9
November	17.5[2]	124.1	142.7
December	17.5[2]	No result	155.4

[1]Ambient profiles developed from receiving water sampling location (I16) with data from June 2002 through December 2004.
[2]17.5 °C is the most conservative effluent temperature within the effluent profile from June 2002 through December 2004.

Information about the SBOO and the outfall diffuser were obtained from the South Bay Water Reclamation Plant Report of Waste Discharge and correspondence with Facility representatives. The following description of the diffuser configuration was submitted by the Discharger and were used in making assumptions for the input into the model:

There are 82 diffuser riser assemblies (potential of four ports per riser assembly) per leg, and one at the wye structure for a total of 165 riser assemblies. The facility has three potential configurations per diffuser riser assembly: blind flanged with no ports (and no heads); heads (and no blind flanges) with four ports, which are temporarily closed; and heads (no blind flanges) with four open ports.

The naming convention of the assemblies is as follows: the wye is designated "W" and the south and north legs have either a "S" prefix or a "N" prefix, respectively. The numbering starts

near the wye structure, with S82 and N82 located near the termini. There are 18 diffuser risers with open ports (72 open ports); they are W, S26, S52, and S68 through S82.

There are three different sizes of ports; with diameters of 2-3/8", 2-1/2", and 2-5/8". The smaller diameter ports are closer to the wye and including the wye. The larger diameter ports are located closer to the termini and the 2-1/2" are in between. There are 53 ports with a diameters of 2-3/8", 52 at 2-1/2", and 60 at 2-5/8".

Port diameter – 2.6 inches - Average diameter of the 72 open ports.

Port elevation – 0.0 meters – Ports are located on the ocean floor.

Vertical angle - 0 degrees

Horizontal angle – 0 degrees – The diffuser ports alternated facing 0 degrees, 90 degrees, 180 degrees, and 270 degrees. This model does not have input abilities for a diffuser with ports facing various directions. A single direction for all ports was assigned. This will result in a conservative dilution factor.

Number of ports – 72 ports

Port spacing – 6 feet – The dilution model does not have the ability to input the actual riser/port configuration of the diffuser. The 72 ports were evenly distributed along a length of diffuser representative of the length of diffuser of the south leg in which the majority of the open ports are concentrated (S68 through S82), with additional length included to account for ports located on risers W, S26, and S52.

Acute mix zone - Not relevant, value does not affect dilution factor as defined by the SWRCB.

Chronic mix zone - Not relevant, value does not affect dilution factor as defined by the SWRCB.

Port depth – 94 feet

Effluent flow – 40 MGD – The total of permitted discharge flows through the SBOO. The actual operating capacity of the outfall is 174 MGD with all ports open.

Effluent salinity – 2.24 mmho/cm– This value was the most conservative salinity value within the effluent profile.

Effluent temp – 17.5 ℃ – This value was the most conservative temperature value within the effluent profile.

Pollutant concentration - Not relevant, input does not affect dilution factor.

Ambient data - Monthly ambient data for June 2002 through December 2004 obtained from the receiving water monitoring data (sample station I16) made available by SBWRP. Monthly salinity and temperature data taken at offshore monitoring station I16 were averaged at each depth to establish an ambient water profile for each month. The monthly profiles were used in Visual Plumes. For each month and for each Visual Plumes run, initial dilution was interpreted to occur either when the plume first reaches the surface, or at the last trapping level when the plume does not surface. The minimum initial dilution was the lowest dilution factor attained using the May 2004 ambient profile.

Far-field diffusion coefficient - 0.0003 m0.67/s2 - recommended in the Visual Plumes manual as a conservative value.

Special Settings Tab, Farfield Diffusivity Option - 4/3 Power Diffusivity was chosen based on the fact that the discharge is occurring in open water.

Special Settings Tab, Diffuser Port Contraction Coefficient - 0.61 - based on the use of cylindrical ports in the diffuser.

Special Settings Tab, Standard Light Adsorption Coefficient - 0.16 - recommended in the manual as a conservative value.