California Regional Water Quality Control Board
Santa Ana Region

March 2, 2007

ITEM: *7

SUBJECT: Renewal of Waste Discharge and Producer/User Reclamation Requirements for the City of Corona, Department of Water & Power's Wastewater Treatment Plant No. 1, Order No. R8-2007-0005, NPDES No. CA8000383, Riverside County

DISCUSSION:

See attached Fact Sheet

RECOMMENDATIONS:

Adopt Order No. R8-2007-0005, NPDES No. CA0105279 as presented.

COMMENT SOLICITATION:

Comments were solicited from the discharger and the following agencies:

U.S. Environmental Protection Agency, Permits Issuance Section (WTR-5) – Doug Eberhardt
U.S. Army District, Los Angeles, Corps of Engineers - Regulatory Branch
U.S. Fish and Wildlife Service, Carlsbad
State Water Resources Control Board, Office of the Chief Counsel – Erik Spiess
State Department of Fish and Game, Ontario
California Coastal Conservancy – Mary Small
California Coastal Commission – Steve Rynas
California Department of Health Services, San Diego – Steve Williams
California Department of Health Services, Carpinteria - Jeff Stone
California Department of Water Resources - Glendale
Riverside County Environmental Health Services – Sandy Bunchek
Riverside County Flood Control and Water Conservation District – Jason Uhley
Santa Ana Watershed Project Authority – Celeste Cantu
Santa Ana River Dischargers Association -
Inland Empire Waterkeeper - Mandy Revell
Orange County Water District - Nira Yamachika
Orange County Coastkeeper - Garry Brown
Lawyers for Clean Water C/c San Francisco Baykeeper
City of Corona, Department of Water & Power – Rudy Fandel

California Regional Water Quality Control Board

Santa Ana Region

3737 Main Street, Suite 500, Riverside, California 92501-3348
Phone (951) 782-4130 - FAX (951) 781-6288– TDD (951) 782-3221

http://www.waterboards.ca.gov/santaana

ORDER NO. R8-2007-0005
NPDES NO. CA8000383

WASTE DISCHARGE AND PRODUCER/USER RECLAMATION REQUIREMENTS

FOR THE
CITY OF CORONA, DEPARTMENT OF WATER & POWER
WASTEWATER TREATMENT PLANT NO. 1
DISCHARGE TO PRADO BASIN MANAGEMENT ZONE

The following Discharger is subject to waste discharge requirements as set forth in this Order:

Table 1. Discharger Information

Discharger	**City of Corona, Department of Water & Power**
Name of Facility	**Wastewater Treatment Plant No. 1**
Facility Address	**2205 Railroad Street**
	Corona, CA 92880
	Riverside County
The U.S. Environmental Protection Agency (USEPA) and the Regional Water Quality Control Board have classified this discharge as a **major** discharge.	

The discharge by the City of Corona from the discharge points identified below is subject to waste discharge requirements as set forth in this Order:

Table 2. Discharge Locations

Discharge Point	Effluent Description	Discharge Point (Latitude)	Discharge Point (Longitude)	Receiving Water
001	Tertiary treated wastewater	33° 53'44"	117°36'35"	Prado Basin Management Zone, Reach 3 of Santa Ana River
002	Secondary treated wastewater	33°53'34"	117°34'36"	Temescal Management Zone
003	Tertiary treated recycled wastewater	33°53'35"	117°36'34"	Prado Basin Management Zone and Temescal Management Zone

Table 3. Administrative Information

This Order was adopted by the Regional Water Board on:	March 2, 2007
This Order shall become effective on:	March 2, 2007
This Order shall expire on:	March 1, 2012
The Discharger shall file a Report of Waste Discharge in accordance with Title 23, California Code of Regulations, as application for issuance of new waste discharge requirements no later than:	September 3, 2011

IT IS HEREBY ORDERED, that this Order supercedes Order No. 01-55 except for enforcement purposes, and, in order to meet the provisions contained in Division 7 of the California Water Code (CWC) (commencing with section 13000) and regulations adopted thereunder, and the provisions of the federal Clean Water Act (CWA) and regulations and guidelines adopted thereunder, the Discharger shall comply with the requirements in this Order.

I, Gerard J. Thibeault, Executive Officer, do hereby certify that this Order with all attachments is a full, true, and correct copy of an Order adopted by the California Regional Water Quality Control Board, Santa Ana Region, on March 2, 2007.

Gerard J. Thibeault, Executive Officer

TABLE OF CONTENTS

I. FACILITY INFORMATION 5
II. FINDINGS 5
III. DISCHARGE PROHIBITIONS 13
IV. EFFLUENT LIMITATIONS AND DISCHARGE SPECIFICATIONS 14
A. Effluent Limitations – Discharge Point 001 14
1. Final Effluent Limitations – DP 001 14
2. Interim Effluent Limitations - DPs 001 17
3. Toxicity Requirements/Discharge Specifications- DP 001 17
B. Land Discharge Specifications – Discharge Point 002 18
C. Reclamation Specifications- DP 003 19
V. RECEIVING WATER LIMITATIONS 23
A. Surface Water Limitations 23
B. Groundwater Limitations 24
VI. PROVISIONS 25
A. Standard Provisions 25
B. Monitoring and Reporting Program (MRP) Requirements 27
C. Special Provisions 27
1. Reopener Provisions 27
2. Special Studies, Technical Reports and Additional Monitoring Requirements. 28
3. Best Management Practices and Pollution Prevention 30
4. Construction, Operation and Maintenance Specifications 30
5. Special Provisions for Municipal Facilities (POTWs Only) 31
6. Other Special Provision – Not Applicable 34
7. Compliance Schedules – DP 001 34
VII. COMPLIANCE DETERMINATION 35

LIST OF TABLES

Table 1. Discharger Information 1
Table 2. Discharge Locations 1
Table 3. Administrative Information 2
Table 4. Facility Information 5
Table 5. Basin Plan Beneficial Uses 8
Table 6. Effluent Limitations at DP 001 14
Table 7. Interim Effluent Limitations at DP 001 17
Table 8. Effluent Limitations at DP 002 18
Table 9. Recycled Water Effluent Limitations at DP 003 19

LIST OF ATTACHMENTS

ATTACHMENT A – DEFINITIONS A-1
ATTACHMENT B – LOCATION MAP B-1
ATTACHMENT C – FLOW SCHEMATIC C-1
ATTACHMENT D – STANDARD PROVISIONS D-1
ATTACHMENT E – MONITORING AND REPORTING PROGRAM (MRP) E-1
ATTACHMENT F – FACT SHEET F-1
ATTACHMENT G – EPA PPL TABLE G-1
ATTACHMENT H – ML TABLE H-1
ATTACHMENT I – TRIGGERS FOR MONITORING PRIORITY POLLUTANTS I-1

I. FACILITY INFORMATION

The following Discharger is subject to waste discharge requirements as set forth in this Order:

Table 4. Facility Information

Discharger	**City of Corona, Department of Water & Power**
Name of Facility	**Wastewater Treatment Plant No. 1**
Facility Address	**2205 Railroad Street**
	Corona, CA 92880
	Riverside County
Facility Contact, Title, and Phone	**Rudy Fandel, Regulatory Compliance Manager; (951) 736-2476**
Mailing Address	**400 South Vicentia Avenue, Corona, CA 92882**
Type of Facility	**Publicly Owned Treatment Works**
Facility Design Flow	**11.5 million gallons per day secondary treatment, or 9 mgd of tertiary treatment**

II. FINDINGS

The California Regional Water Quality Control Board, Santa Ana Region (hereinafter Regional Water Board), finds:

A. Background. The City (hereinafter Discharger) is currently discharging pursuant to Order No. 01-55 and National Pollutant Discharge Elimination System (NPDES) Permit No. CA8000383. Order 01-55 was amended by Order No. R8-2006-0064 on October 13, 2006, to include effluent limitations for total residual chlorine discharges to outfall No. 001 and requirements for the use of a chlorine disinfection system in accordance with the California Department of Health Services (CDHS) Title 22 requirements. The Discharger submitted a Report of Waste Discharge (ROWD), dated May 19, 2006, and applied for a NPDES permit renewal to discharge up to 11.5 million gallons per day (mgd) of secondary treated wastewater or up to 9 mgd of tertiary treated wastewater from its Wastewater Treatment Plant No. 1, hereinafter Facility. The application was deemed complete on December 4, 2006.

For the purposes of this Order, references to the "discharger" or "permittee" in applicable federal and State laws, regulations, plans, or policy are held to be equivalent to references to the Discharger herein.

B. **Facility Description**. The Discharger owns and operates Wastewater Treatment Plant No. 1, a publicly owned treatment works (POTW). Treated wastewater is discharged from Discharge point (DP) 001 (see table on cover page) to the Butterfield drain, which is within the Prado Basin Management Zone (PBMZ). All surface water flows in the PBMZ ultimately enter Reach 3 of the Santa Ana River within the Santa Ana River watershed. The Santa Ana River and other surface streams within the PBMZ are waters of the United States. Secondary treated wastewater is discharged at DP 002 to nearby percolation ponds located within or adjacent to the PBMZ[1] and an unlined part of Temescal Creek. Recycled water is delivered through DP 003 for irrigation within the PBMZ Temescal Management Zone. Attachment B provides a map of the area around the Facility. Attachment C provides a flow schematic of the Facility.

C. **Legal Authorities.** This Order is issued pursuant to Section 402 of the federal Clean Water Act (CWA) and implementing regulations adopted by the U.S. Environmental Protection Agency (USEPA) and Chapter 5.5, Division 7 of the California Water Code (CWC) (commencing with section 13370). It shall serve as a NPDES permit for point source discharges from this facility to surface waters. This Order also serves as Waste Discharge Requirements (WDRs) pursuant to Article 4, Chapter 4, division 7 of the Water Code (commencing with section 13260).

D. **Background and Rationale for Requirements.** The Regional Water Board developed the requirements in this Order based on information submitted as part of the application, through monitoring and reporting programs, and other available information. The Fact Sheet (Attachment F), which contains background information and rationale for Order requirements, is hereby incorporated into this Order and, thus constitutes part of the Findings for this Order. Attachments A through E and G through L are also incorporated into this Order.

E. **Pretreatment:** The Discharger has established an approved regional pretreatment program. The approved pretreatment program and its components, such as Ordinance No. 2330, local limits (adopted by the Discharger in April 18, 1985, and control mechanisms, among others, are hereby made an enforceable condition of this Order.

F. **California Environmental Quality Act (CEQA).** Under Water Code section 13389, this action to adopt an NPDES permit is exempt from the provisions of CEQA, Public Resources Code section 21000 et seq. (*County of Los Angeles v. California State Water Resources Control Board* (2006) 143 Cal.App.4th 985, mod. (Nov. 6, 2006, B184034) 50 Cal.Rptr.3d 619, 632-636.) For the plant expansion project, a mitigated negative declaration and addendum was adopted on July 2, 2003 and October 5, 2005, respectively. This action also involves the re-issuance of waste discharge requirements for an existing facility that discharges treated wastewater to land and as such, is exempt from the provisions of California Environmental Quality Act (commencing with Section 21100) in that the activity is exempt pursuant to Title 14 of the California Code of Regulations Section 15301".

---

1 *As described in the Fact Sheet, p. F-8, while certain of the ponds are physically located within the PBMZ, they are enclosed by berms such that discharges to the ponds are not presently considered direct discharges to the PBMZ.*

G. **Technology-based Effluent Limitations.** Section 301(b) of the CWA and implementing USEPA permit regulations at section 122.44, title 40 of the Code of Federal Regulations[2], require that permits include conditions meeting applicable technology-based requirements at a minimum, and any more stringent effluent limitations necessary to meet applicable water quality standards. The discharge authorized by this Order must meet minimum federal technology-based requirements based on Secondary Treatment Standards at Part 133 and/or Best Professional Judgment (BPJ) in accordance with Part 125, section 125.3. A detailed discussion of the technology-based effluent limitations development is included in the Fact Sheet.

H. **Water Quality-Based Effluent Limitations.** Section 301(b) of the CWA and section 122.44(d) require that permits include limitations more stringent than applicable federal technology-based requirements where necessary to achieve applicable water quality standards. This Order contains requirements, expressed as a technology equivalence requirement, more stringent than secondary treatment requirements that are necessary to meet applicable water quality standards. The rationale for these requirements, which consist of tertiary treatment requirements, is discussed in the Fact Sheet.

Section 122.44(d)(1)(i) mandates that permits include effluent limitations for all pollutants that are or may be discharged at levels that have the reasonable potential to cause or contribute to an exceedance of a water quality standard, including numeric and narrative objectives within a standard. Where reasonable potential has been established for a pollutant, but there is no numeric criterion or objective for the pollutant, water quality-based effluent limitations (WQBELs) must be established using: (1) USEPA criteria guidance under CWA section 304(a), supplemented where necessary by other relevant information; (2) an indicator parameter for the pollutant of concern; or (3) a calculated numeric water quality criterion, such as a proposed state criterion or policy interpreting the state's narrative criterion, supplemented with other relevant information, as provided in section 122.44(d)(1)(vi).

I. **Water Quality Control Plans.** The Regional Water Board adopted a revised Water Quality Control Plan for the Santa Ana Region (hereinafter Basin Plan) that became effective on January 24, 1995. The Basin Plan designates beneficial uses, establishes water quality objectives, and contains implementation programs and policies to achieve those objectives for all waters in the Santa Ana Region addressed through the plan. More recently, the Basin Plan was amended significantly to incorporate revised boundaries for groundwater subbasins, now termed "management zones", new nitrate-nitrogen and TDS objectives for the new management zones, and new nitrogen and TDS management strategies applicable to both surface and ground waters.

---

2 *All further statutory references are to title 40 of the Code of Federal Regulations unless otherwise indicated.*

This Basin Plan Amendment was adopted by the Regional Water Board on January 22, 2004. The State Water Resources Control Board (State Water Board) and Office of Administrative Law (OAL) approved the Amendment on September 30, 2004 and December 23, 2004, respectively. The surface water standards provisions of the Amendment are awaiting approval by the U.S. Environmental Protection Agency. This Order implements relevant provisions of the N/TDS Basin Plan Amendment.

In addition, the Basin Plan implements State Water Resources Control Board (State Water Board) Resolution No. 88-63, which established State policy that all waters, with certain exceptions, should be considered suitable or potentially suitable for municipal or domestic supply.

Based on the criteria specified in the State Water Board Resolution, the Basin Plan specifies that Reach 5 of the Santa Ana River, beginning at the intersection of Orange Avenue in the City of Redlands, and downstream reaches are excepted from the municipal and domestic supply beneficial use. As discussed in detail in the Fact Sheet (Attachment F), beneficial uses applicable to the Prado Basin Management Zone, Temescal Creek and Reach 3 of the Santa Ana River are as follows:

Table 5. Basin Plan Beneficial Uses

Discharge Point	Receiving Water Name	Beneficial Use(s)
001	**Prado Basin Management Zone**	Present or Potential: Warm freshwater habitat (WARM); wildlife habitat (WILD), Rare, threatened or endangered species (RARE), contact[3] (REC-1) and non-contact (REC-2) water recreation. Excepted from Municipal and Domestic Supply
	Reach 3 of Santa Ana River	Present or Potential: Agricultural supply (AGR), Ground water recharge (GWR), Water contact recreation (REC-1), Non-contact water recreation (REC-2),Warm freshwater habitat (WARM); Wildlife habitat (WILD), and Rare, threatened or endangered species (RARE) Excepted from Municipal and Domestic Supply
002	**Temescal Management Zone**	Present or Potential: Municipal and domestic water supply (MUN), agricultural supply (AGR), industrial service supply (IND), industrial process supply (PROC).

3 *Access prohibited on some portions by Riverside County Flood Control.*

Table 5. Basin Plan Beneficial Uses

Discharge Point	Receiving Water Name	Beneficial Use(s)
003	**Prado Basin Management Zone**	Present or Potential: Warm freshwater habitat (WARM); wildlife habitat (WILD), Rare, threatened or endangered species (RARE), contact[2] (REC-1) and non-contact (REC-2) water recreation. Excepted from Municipal and Domestic Supply
	Temescal Management Zone	Present or Potential: Municipal and domestic water supply (MUN), agricultural supply (AGR), industrial service supply (IND), industrial process supply (PROC).

Requirements of this Order implement the Basin Plan.

J. **Total Dissolved Solids Offset:** The amended Basin Plan includes wasteload allocations for discharges of total dissolved solids (TDS) to the Santa Ana River system. The Basin Plan recognizes that strict compliance with TDS limits may be difficult to achieve and it describes the regulatory approach the Regional Board uses to address such situations. The Board incorporates offset provisions in waste discharge requirements whereby dischargers can implement an approved program to offset TDS discharges in excess of specified TDS limits, provided that the discharger makes all reasonable efforts to improve the TDS quality of the water supply (and thereby, the wastewater). As in the previous waste discharge requirements, the Discharger has constructed and operated a 15 million gallon a day water desalter facility to offset the total dissolved solids discharges from the Plant No. 1. This Order requires the Discharger to submit an updated offset program. See Section VI.C.2.c., below.

K. **National Toxics Rule (NTR) and California Toxics Rule (CTR).** USEPA adopted the NTR on December 22, 1992, and later amended it on May 4, 1995 and November 9, 1999. About forty criteria in the NTR applied in California. On May 18, 2000, USEPA adopted the CTR. The CTR promulgated new toxics criteria for California and, in addition, incorporated the previously adopted NTR criteria that were applicable in the state. The CTR was amended on February 13, 2001. These rules contain water quality criteria for priority pollutants.

L. **State Implementation Policy.** On March 2, 2000, the State Water Board adopted the Policy for Implementation of Toxics Standards for Inland Surface Waters, Enclosed Bays, and Estuaries of California (State Implementation Policy or SIP). The SIP became effective on April 28, 2000 with respect to the priority pollutant criteria promulgated for California by the USEPA through the NTR and to the priority pollutant objectives established by the Regional Water Board in the Basin Plan. The SIP became effective on May 18, 2000 with respect to the priority pollutant criteria promulgated by the USEPA through the CTR. The State Water Board adopted amendments to the SIP on February 24, 2005 that became effective on July 13, 2005. The SIP establishes implementation provisions for priority pollutant criteria and objectives and provisions for chronic toxicity control. Requirements of this Order implement the SIP.

M. State General Waste Discharge Requirements for Sanitary Sewer Systems. The State Water Board issued General Waste Discharge Requirements for Sanitary Sewer Systems, Water Quality Order No. 2006-0003 on May 2, 2006, requiring public agencies that own sanitary sewer systems, comprised of more than one mile of pipes or sewer lines, to enroll for coverage under the General Order. The General Order requires agencies to develop sanitary sewer management plans (SSMPs) and report all sanitary sewer overflows (SSOs).

This Order requires the Discharger and other governmental agencies[4] to obtain enrollment for regulation under the General Water Quality Order No. 2006-0003. The Discharger has already enrolled.

N. Compliance Schedules and Interim Requirements. Section 2.1 of the SIP provides that, based on a Discharger's request and demonstration that it is infeasible for an existing Discharger to achieve immediate compliance with an effluent limitation derived from a CTR criterion, compliance schedules may be allowed in an NPDES permit. Unless an exception has been granted under Section 5.3 of the SIP, a compliance schedule may not exceed 5 years from the date that the permit is issued or reissued, nor may it extend beyond 10 years from the effective date of the SIP (or May 18, 2010) to establish and comply with CTR criterion-based effluent limitations. Where a compliance schedule for a final effluent limitation exceeds 1 year, the Order must include interim numeric limitations for that constituent or parameter. Where allowed by the Basin Plan, compliance schedules and interim effluent limitations or discharge specifications may also be granted to allow time to implement a new or revised water quality objective. This Order includes compliance schedules and interim effluent limitations and/or discharge specifications. A detailed discussion of the basis for the compliance schedule(s) and interim effluent limitation(s) and/or discharge specifications is included in the Fact Sheet.

O. Alaska Rule. On March 30, 2000, USEPA revised its regulation that specifies when new and revised State and Tribal water quality standards (WQS) become effective for CWA purposes (40 CFR 131.21, 65 FR 24641, April 27, 2000). Under the revised regulation (also known as the Alaska rule), new and revised standards submitted to USEPA after May 30, 2000, must be approved by USEPA before being used for CWA purposes. The final rule also provides that standards already in effect and submitted to USEPA by May 30, 2000, may be used for CWA purposes, whether or not approved by USEPA.

---

4 *Member agencies and sewering agencies discharging wastewater into the facility.*

P. Stringency of Requirements for Individual Pollutants. This Order contains restrictions on individual pollutants that are no more stringent than required by the federal CWA. Individual pollutant restrictions consist of technology-based restrictions and water quality-based effluent limitations. The technology-based effluent limitations consist of restrictions on pollutants listed. Restrictions on pollutants listed are specified in federal regulations as discussed in Attachment F, and the permit's technology-based pollutant restrictions are no more stringent than required by the CWA.

Water quality-based effluent limitations have been scientifically derived to implement water quality objectives that protect beneficial uses. Both the beneficial uses and the water quality objectives have been approved pursuant to federal law and are the applicable federal water quality standards. To the extent that toxic pollutant water quality-based effluent limitations were derived from the CTR, the CTR is the applicable standard pursuant to 40 CFR 131.38. The scientific procedures for calculating the individual water quality-based effluent limitations are based on the CTR-SIP, which was approved by USEPA on May 18, 2000. Apart from certain water quality standards changes resulting from the N/TDS Basin Plan amendment that are awaiting USEPA approval, all beneficial uses and water quality objectives contained in the Basin Plan were approved under state law and submitted to and approved by USEPA prior to May 30, 2000. The water quality standards changes awaiting USEPA approval do not have a material effect on the requirements specified in this Order. Any water quality objectives and beneficial uses submitted to USEPA prior to May 30, 2000, but not approved by USEPA before that date, are nonetheless "applicable water quality standards for purposes of the CWA" pursuant to 40 CFR 131.21(c)(1). Collectively, this Order's restrictions on individual pollutants are no more stringent than required to implement the technology-based requirements of the CWA and the applicable water quality standards for purposes of the CWA.

Q. Antidegradation Policy. Section 131.12 of 40 CFR requires that State water quality standards include an antidegradation policy consistent with the federal policy. The State Water Board established California's antidegradation policy in State Water Board Resolution 68-16. Resolution No. 68-16 incorporates the federal antidegradation policy, where the federal policy applies under federal law. Resolution 68-16 requires that existing quality of waters be maintained unless degradation is justified based on specific findings. The Regional Water Board's Basin Plan implements, and incorporates by reference, both the State and federal antidegradation policies. As discussed in detail in the Fact Sheet (Attachment F) the permitted discharge is consistent with the antidegradation provision of 40 CFR section 131.12 and State Water Board Resolution 68-16.

R. Anti-Backsliding Requirements. Sections 402(o)(2) and 303(d)(4) of the CWA and federal regulations at title 40 CFR, Code of Federal Regulations section 122.44(l) prohibit backsliding in NPDES permits. These anti-backsliding provisions require effluent limitations in a reissued permit to be as stringent as those in the previous permit, with some exceptions where limitations may be relaxed. All effluent limitations in this Order are at least as stringent as the effluent limitations in the previous Order No. 01-55.

S. **Monitoring and Reporting.** Section 122.48 of 40 CFR requires that all NPDES permits specify requirements for recording and reporting monitoring results. Water Code sections 13267 and 13383 authorize the Regional Water Boards to require technical and monitoring reports. The Monitoring and Reporting Program establishes monitoring and reporting requirements to implement federal and State requirements. This Monitoring and Reporting Program is provided in Attachment E.

T. **Biosolids Requirements.** On February 19, 1993, the USEPA issued a final rule for the use and disposal of sewage sludge, 40 CFR, Part 503. This rule requires that producers of sewage sludge meet certain reporting, handling, and disposal requirements. The State of California has not been delegated the authority to implement this program, therefore, the U.S. Environmental Protection Agency is the implementing agency. However, this Order includes Regional Board biosolids requirements.

U. **Standard and Special Provisions.** Standard Provisions, which apply to all NPDES permits in accordance with section 122.41, and additional conditions applicable to specified categories of permits in accordance with section 122.42, are provided in Attachment D. The Discharger must comply with all standard provisions and with those additional conditions that are applicable under section 122.42. The Regional Water Board has also included in this Order special provisions applicable to the Discharger. A rationale for the special provisions contained in this Order is provided in the attached Fact Sheet.

V. **Provisions and Requirements Implementing State law.** The provisions/requirements in subsections IV.B, IV.C, and V.B of this Order are included to implement State law only. These provisions are not required or authorized under the federal CWA; consequently, violations of these provisions are not subject to the enforcement remedies that are available for NPDES violations.

W. **Notification of Interested Parties.** The Regional Water Board has notified the Discharger and interested agencies and persons of its intent to prescribe Waste Discharge Requirements for the discharge and has provided them with an opportunity to submit their written comments and recommendations. Details of notification are provided in the Fact Sheet (Attachment F) of this Order.

X. **Consideration of Public Comment.** The Regional Water Board, in a public meeting, heard and considered all comments pertaining to the discharge. Details of the Public Hearing are provided in the Fact Sheet (Attachment F) of this Order.

III. DISCHARGE PROHIBITIONS

A. Wastewater discharged at DP 001 and DP 003 shall be limited to treated and disinfected effluent that meets the conditions and requirements specified in Section IV.A.1.

B. The discharge of treated wastewater at DP 002 into the Lincoln/Cota percolation/evaporation ponds other than a secondary treated wastewater (or better) is prohibited.

C. The discharge of wastewater at a location or in a manner different from those described in this Order is prohibited.

D. The bypass or overflow of untreated wastewater or wastes to surface waters or surface water drainage courses is prohibited, except as allowed in Standard Provision I. G. of Attachment D, Federal Standard Provisions.

E. The discharge of any substances in concentrations toxic to animal or plant life is prohibited.

F. The discharge of any radiological, chemical, or biological warfare agent or high level radiological waste is prohibited.

IV. EFFLUENT LIMITATIONS AND DISCHARGE SPECIFICATIONS

A. Effluent Limitations – Discharge Point 001

1. Final Effluent Limitations – DP 001

Unless otherwise specifically specified hereinafter, compliance with the following effluent limitations is measured at monitoring location M-001 as described in the attached MRP (Attachment E).

a. The discharge shall maintain compliance with the following effluent limitations at DP 001:

Table 6. Effluent Limitations at DP 001

Parameter	Units	Effluent Limitations				
		Average Monthly	Average Weekly	Maximum Daily	Instantaneous Minimum	Instantaneous Maximum
Biochemical Oxygen Demand 5-day @ 20°C	mg/L	20	30	--	--	--
Total Suspended Solids	mg/L	20	30	--	--	--
pH	Standard units	--	--	--	6.5	8.5
Total Chlorine Residual	mg/L	--	--	--	--	0.1
Ammonia-Nitrogen	mg/L	4.5	--	--	--	--
Selenium*	µg/L	4.1		8.2		
Zinc*	µg/L	138		278		
Dibenzo(a,h)Anthracene*	µg/L	0.049		0.098		
2,3,7,8-TCDD*	µg/L	0.000000014		0.000000028	--	--
Bis(2-ethylhexyl) phthalate*	µg/L	5.9	--	11.8	--	--

*Final Limits specified herein are effective on April 1, 2009. Interim effluent limitations are specified for these constituents in IV.A.2., below.

b. **Percent Removal:** The average monthly percent removal of BOD 5-day 20°C and total suspended solids shall not be less than 85 percent.

c. **TDS Limitations** - The lower of the two total dissolved solids (TDS) limits specified in 1) or 2), below, is the limit.

1). The 12-month flow weighted running average TDS constituent concentrations and mass emission rates shall not exceed 700 mg/L and 21,017 lbs/day[5], respectively, unless:

a) The Discharger demonstrates to the satisfaction of the Regional Board's Executive Officer that:

(1) Discharges in excess of the TDS limits are due to the quality of water supply sources utilized in the Discharger's service area, and that all reasonable steps, as agreed upon by the Executive Officer, have been taken to ensure that the best quality supplies are obtained and utilized in the Discharger's service area; or

(2) Discharges in excess of the TDS limits are due solely to chemical additions in the treatment process needed to meet waste discharge requirements, and the Discharger has taken all steps to optimize chemical additions so as to minimize the increases; and

b) The Discharger implements a plan, with the approval of the Executive Officer, to offset discharges in excess of the TDS limits. See Section VI.C.2.c., below.

2) The 12-month flow weighted running average TDS concentration shall not exceed the 12-month flow weighted running average TDS concentration in the water supply by more than 250 mg/L[6], unless:

a) The Discharger demonstrates to the satisfaction of the Regional Board's Executive Officer that TDS discharges in excess of the 250 mg/l mineral increment are due solely to chemical additions in the treatment process needed to meet waste discharge requirements, and the Discharger has taken all steps to optimize chemical additions so as to minimize the TDS increases; and

b) The Discharger implements a plan, with the approval of the Executive Officer, to offset TDS discharges in excess of the 250 mg/l mineral increment. See Section VI.C.2.c., below.

---

5 *Derived from 3.6 mgd x 8.34 x concentration mg/L.*

6 *An exceedance of this limit shall not be considered a violation, provided it is due solely to chemical additions in the treatment process needed to meet waste discharge requirements or other valid regulatory requirements. TDS is used to make comparison with water supply mineral increment here may be measured at influent or secondary effluent.*

d. The 12-month flow weighted running average Total Inorganic Nitrogen (TIN) concentration and mass emission rates of the discharge shall not exceed 10 mg/L and 300 lbs/day[7], respectively, unless the Discharger implements a plan, with the approval of the Executive Officer, to offset TIN discharges in excess of the TIN limits. See Section VI.C.2.c., below.

e. The discharge shall at all times be adequately oxidized, filtered, and disinfected treated wastewater and shall meet the following limitations.

1) When filtration is through natural undisturbed soils or a bed of filter media, the turbidity of the filter effluent shall not exceed any of the following:

a) Average of 2 Nephelometric Turbidity Unit (NTU) within any 24-hour period;
b) 5 NTU more than 5 percent of the time in any 24-hour period; and
c) 10 NTU at any time.

2) The disinfected effluent shall meet the following:

a) When chlorine disinfection process is utilized followed by filtration, a CT (the product of total chlorine residual and modal contact time measured at the same point) value of not less than 450 milligram-minutes per liter at all times with a modal contact time of at least 90 minutes, based on peak dry weather design flow shall be provided.
b) When a disinfection process combined with the filtration process is utilized, the combined process shall demonstrate inactivation and/or removal of 99.999 percent of the plaque-forming units of F-specific bacteriophage MS2, or polio virus in the wastewater. A virus that is at least as resistant to disinfection as polio virus may be used for purposes of the demonstration.
c) Where ultraviolet (UV) disinfection is solely used for disinfection, UV disinfection shall meet the requirements specified in the Ultraviolet Disinfection Guidelines for Drinking Water and Water Reuse, published by the National Water Research Institute, Second Edition, unless otherwise approved by the California Department of Health Services. The Discharger's UV disinfection system shall not be utilized as the sole source of disinfection except under emergency conditions unless it is recommissioned under CDHS oversight.
d) The weekly average concentration of total coliform bacteria shall not exceed a Most Probable Number (MPN) of 2.2 total coliform bacteria per 100 milliliters (ml). (see Compliance Determination VII.J.1., below)

---

7 *Derived from 3.6 mgd x 8.34 x 10 mg/L.*

e) The number of total coliform bacteria shall not exceed an MPN of 23 total coliform bacteria per 100 ml in more than one sample in any 30-day period.

f) No total coliform bacteria sample shall exceed an MPN of 240 total coliform bacteria per 100 ml.

f. There shall be no visible oil and grease in the discharge.

2. Interim Effluent Limitations - DPs 001

During the period beginning March 2, 2007 and ending on March 31, 2009, the discharge of treated effluent shall maintain compliance with the following limitations at Discharge Points 001, with compliance measured at Monitoring Locations M-001 as described in the attached MRP. These interim effluent limitations shall apply in lieu of the corresponding final effluent limitations specified for the same parameters during the time period indicated in this provision.

Table 7. Interim Effluent Limitations at DP 001

Parameter	Units	Average Monthly	Maximum Daily
Selenium	µg/L	20	20
Zinc	µg/L	303	303
Dibenzo(a,h)Anthracene	µg/l	0.19	0.19
2,3,7,8-TCDD	µg/l	0.00000129	0.00000129
Bis(2-ethylhexyl) phthalate*	µg/L	6.6	6.6

3. Toxicity Requirements/Discharge Specifications- DP 001

Compliance with toxicity requirements shall be measured at monitoring location M-001:

a. There shall be no acute or chronic toxicity in the plant effluent nor shall the plant effluent cause any acute or chronic toxicity in the receiving water. All waters shall be maintained free of toxic substances in concentrations which are toxic to, or which produce detrimental physiological responses in human, plant, animal, or indigenous aquatic life. This Order contains no numeric limitation for toxicity. However, the Discharger shall conduct chronic toxicity monitoring.

b. The Discharger shall implement the accelerated monitoring as specified in Attachment E when the result of any single chronic toxicity test of the effluent exceeds 1.0 TUc.

B. Land Discharge Specifications – Discharge Point 002

1. The discharge of treated wastewater shall maintain compliance with the following effluent limitations, with compliance measured at monitoring location M-002, as described in the attached Monitoring and Reporting Program (Attachment E):

Table 8. Effluent Limitations at DP 002

Parameter	Units	Effluent Limitations				
		Average Monthly	Average Weekly	Instantaneous Minimum	Instantaneous Maximum	12-Month Average.
Biochemical Oxygen Demand 5-day @ 20°C	mg/L	30	45	- -	- -	
Total Suspended Solids	mg/L	30	45	- -	- -	
pH	standard units	- -	- -	6.0	9.0	
TDS	mg/l					770
Total Inorganic Nitrogen	mg/l					13.3
Antimony	mg/l					0.006
Cadmium	mg/l					0.01
Chromium, VI	mg/l					0.05
Cobalt	mg/l					0.2
Lead	mg/l					0.05
Mercury	mg/l					0.002
Selenium	mg/l					0.01
Silver	mg/l					0.05

2. The discharge shall at all times be adequately oxidized treated wastewater. With compliance measured at monitoring location M-002, the discharge shall be considered adequately oxidized if the 5-day @ 20°C Biochemical Oxygen Demand and Total Suspended Solids constituent concentrations of the discharge are less than or equal to the limitations shown in B.1., above.

3. The monthly average biochemical oxygen demand and suspended solids concentrations of the discharge shall not be greater than fifteen percent (15%) of the monthly average influent concentration.

4. The volume of discharge shall be limited to 5.5 MGD. (see also Provision VI.C.2.e., below)

C. Reclamation Specifications- DP 003

1. Upon the effective of this Order, the use of recycled water for parks, landscape irrigation, or other similar uses shall maintain compliance with the following limitations. Compliance is to be measured at representative monitoring location REC-001 where representative samples of recycled water can be obtained for laboratory testing and analysis as described in the attached Monitoring and Reporting Program (Attachment E). The Discharger shall submit for approval by the Executive Officer other monitoring location(s) not specified herein where representative samples of recycled water could be obtained for laboratory testing and analysis with compliance measured at monitoring location REC-001.

   a. Physical/Biological Limitations:

Table 9. Recycled Water Effluent Limitations at DP 003

Parameter	Units	Effluent Limitations			
		Average Monthly	Average Weekly	Instantaneous Minimum	Instantaneous Maximum
Biochemical Oxygen Demand 5-day @ 20°C	mg/L	20	30	- -	- -
Total Suspended Solids	mg/L	20	30	- -	- -
pH	standard units	- -	- -	6	9

   b. TDS Limitations: For recycled water use on the sites overlying the Temescal MZ, the 12-month flow weighted running average TDS concentration shall not exceed 770 mg/L, unless the Discharger implements an approved offset program. See Section VI.C.2.c., below.

   c. Total Inorganic Nitrogen (TIN) Limitations: For recycled water use sites overlying the Temescal MZ, the 12-month flow weighted running average TIN concentration in the recycled water shall not exceed 13.1 mg/L.

   d. Recycled water described in Section 60307(a) of Division 4, Chapter 3, Title 22, California Code of Regulations and for irrigation of food crops, parks and playground, school yards, residential landscaping and other irrigation uses not specified in Section 60304(a) of Division 4, Chapter 3, Title 22, California Code of Regulations or not prohibited in other Sections of the California Code of Regulations shall at all times be adequately oxidized, filtered, and disinfected tertiary treated wastewater and shall meet the following limitations, with compliance measured at monitoring location REC-001:

      1). The turbidity of the filter effluent shall not exceed any of the following:

         a). When filtration is through natural undisturbed soils or a bed of filter media:

            (1) Average of 2 Nephelometric Turbidity Units (NTU) within any 24-hour period;

(2) 5 NTU more than 5 percent of the time in any 24-hour period; and
(3) 10 NTU at any time.

b). When filtration is through microfiltration:
(1) 0.2 Nephelometric Turbidity Unit (NTU) more than 5 % of the time within a 24-hour period; and
(2) 0.5 NTU at any time.

2). The disinfected effluent shall meet the following:

a) The weekly average total coliform bacteria[8] shall not exceed a Most Probable Number (MPN) of 2.2 total coliform bacteria per 100 milliliters (ml).
b) The number of total coliform organism shall not exceed an MPN of 23 total coliform bacteria per 100 ml in more than one sample in any 30-day period.
c) No total coliform sample shall exceed an MPN of 240 total coliform bacteria per 100 ml.
d) When chlorine disinfection process is utilized followed by filtration, a CT (the product of total chlorine residual and modal contact time[9] measured at the same point) value of not less than 450 milligram-minutes per liter at all times with a modal contact time of at least 90 minutes, based on peak dry weather design flow shall be provided.
e) When a disinfection process combined with the filtration process is utilized, the combined process shall demonstrate inactivation and/or removal of 99.999 percent of the plaque-forming units of F-specific bacteriophage MS2, or polio virus in the wastewater. A virus that is at least as resistant to disinfection as polio virus may be used for purposes of the demonstration.

e. Recycled water used for irrigation of food crops where the edible portion is produced above ground and not contacted by the recycled water shall at all times be adequately oxidized and disinfected so that average weekly total coliform bacteria in the disinfected effluent does not exceed a most probable number (MPN) of 2.2 per 100 milliliters utilizing the bacteriological results of the last seven days for which analyses have been completed, and the number of total coliform bacteria does not exceed an MPN of 23 per 100 milliliters in more than one sample.

---

8 *See Compliance Determination Section VII.J.1.*

9 *Modal contact time shall be calculated daily based on the minimum one-hour average value in a 24-hour period.*

f. Recycled water used for the uses listed below shall be an oxidized and disinfected water so that the average weekly total coliform bacteria[10] in the disinfected effluent does not exceed a most probable number (MPN) of 23 per 100 milliliters utilizing the bacteriological results of the last seven days for which analyses have been completed, and the number of total coliform bacteria does not exceed an MPN of 240 per 100 milliliters in more than one sample in any 30 day period.

   1) Industrial boiler feed, nonstructural fire fighting, backfill consolidation around nonpotable piping, soil compaction, mixing concrete, dust control on roads and streets, cleaning roads, sidewalks and outdoor work areas and industrial process water that will not come into contact with workers.
   2) Irrigation of cemeteries, freeway landscaping, restricted access golf courses, ornamental nursery stock and sod farms where access by the general public is not restricted, pasture for animals producing milk for human consumption, and any nonedible vegetation where access is controlled so that irrigated area cannot be used as if it were part of a park, playground or school yard

g. For recycled water uses specified in Sections 60304 and 60307 of Title 22 where filtration is provided pursuant Section 60301.320(a) and coagulation is not used as part of the treatment process, the Discharger shall comply with the following:

   1) The turbidity of the influent to the filters is continuously measured and the influent turbidity does not exceed 5 NTU for more than 15 minutes and never exceeds 10 NTU;
   2) The filter effluent turbidity shall not exceed 2 NTU; and;
   3) Should the filter influent turbidity exceed 5 NTU for more than 15 minutes, chemical addition shall be automatically activated if available, if not, the wastewater shall be diverted.

2. For new reuse sites, the use of recycled water shall only commence after the California Department of Health Services (CDHS) grants final approval for such use. The Discharger shall provide the Regional Water Board with a copy of the CDHS approval letter within 30 days of the approval notice.

3. The Discharger shall be responsible for assuring that recycled water is delivered and utilized in conformance with this Order, the recycling criteria contained in Title 22, Division 4, Chapter 3, Sections 60301 through 60355, California Code of Regulations. The Discharger shall conduct periodic inspections of the facilities of the recycled water users to monitor compliance by the users with this Order.

---

10 *See Compliance Determination Section VII.K.2.*

4. The Discharger shall establish and enforce Rules and Regulations for Recycled Water users, governing the design and construction of recycled water use facilities and the use of recycled water in accordance with the uniform statewide recycling criteria established pursuant to the California Water Code Section 13521.

    a. Use of recycled water by the Discharger shall be consistent with its Rules and Regulations for Recycled Water Use.

    b. Any revisions made to the Rules and Regulations shall be subject to the review of the Regional Water Board, the California Department of Health Services, and the County Environmental Health Department. The revised Rules and Regulations or a letter certifying that the Discharger's Rules and Regulations contain the updated provisions in this Order, shall be submitted to the Regional Water Board within 60 days of adoption of this Order by the Regional Water Board.

5. The Discharger shall, within 60 days of the adoption of this Order, review and update as necessary its program to conduct compliance inspections of recycled water reuse sites. Inspections shall determine the status of compliance with the Discharger's Rules and Regulations for Recycled Water Use.

6. The storage, delivery, or use of recycled water shall not individually or collectively, directly or indirectly, result in a pollution or nuisance, or adversely affect water quality, as defined in the California Water Code

7. Prior to delivering recycled water to any new user, the Discharger shall submit to the Regional Water Board, the California Department of Health Services and the County Environmental Health Department a report containing the following information for review and approval:

    a. The average number of persons estimated to be served at each use site area on a daily basis.

    b. The specific boundaries of the proposed use site area including a map showing the location of each facility, drinking water fountain, and impoundment to be used.

    c. The person or persons responsible for operation of the recycled water system at each use area.

    d. The specific use to be made of the recycled water at each use area.

    e. The methods to be used to assure that the installation and operation of the recycled system will not result in cross connections between the recycled water and potable water piping systems. This shall include a description of the pressure, dye or other test methods to be used to test the system.

f. Plans and specifications which include following:
   1) Proposed piping system to be used.
   2) Pipe locations of both the recycled and potable systems.
   3) Type and location of the outlets and plumbing fixtures that will be accessible to the public.
   4) The methods and devices to be used to prevent backflow of recycled water into the potable water system.
   5) Plan notes relating to specific installation and use requirements.

8. The Discharger shall require the user(s) to designate an on-site supervisor responsible for the operation of the recycled water distribution system within the recycled water use area. The supervisor shall be responsible for enforcing this Order, prevention of potential hazards, the installation, operation and maintenance of the distribution system, maintenance of the distribution and irrigation system plans in "as-built" form, and for the distribution of the recycled wastewater in accordance with this Order.

V. RECEIVING WATER LIMITATIONS

A. Surface Water Limitations

1. Receiving water limitations are based upon water quality objectives contained in the Basin Plan. As such, they are a required part of this Order. The discharge shall not cause the following in Prado Basin Management Zone, Temescal Creek, and Santa Ana River Reach 3, or in downstream Reaches of the Santa Ana River:

   a. Coloration of the receiving waters, which causes a nuisance or adversely affects beneficial uses.

   b. Deposition of oil, grease, wax or other materials in the receiving waters in concentrations which result in a visible film or in coating objects in the water, or which cause a nuisance or affect beneficial uses.

   c. An increase in the amounts of suspended or settleable solids in the receiving waters, which will cause a nuisance or adversely affect beneficial uses as a result of controllable water quality factors.

   d. Taste or odor-producing substances in the receiving waters at concentrations, which cause a nuisance or adversely affect beneficial uses.

   e. The presence of radioactive materials in the receiving waters in concentrations, which are deleterious to human, plant or animal life.

   f. The depletion of the dissolved oxygen concentration below 5.0 mg/l.

g. The temperature of the receiving waters to be raised above 90°F (32°C) during the period of June through October, or above 78°F (26°C) during the rest of the year.

h. The concentration of pollutants in the water column, sediments, or biota to adversely affect the beneficial uses of the receiving water. The discharge shall not result in the degradation of inland surface water communities and populations, including vertebrate, invertebrate, and plant species.

2. The discharge of wastes shall not cause a violation of any applicable water quality standards for receiving waters adopted by the Regional Water Board or State Water Board, as required by the Clean Water Act and regulations adopted thereunder.

3. Pollutants not specifically mentioned and limited in this Order shall not be discharged at levels that will bioaccumulate in aquatic resources to levels, which are harmful to human health.

4. The discharge shall not contain constituent concentrations of mercury that will result in the bioaccumulation of methylmercury in fish flesh tissue greater than 0.3 milligram methylmercury/kilogram. (See also Section VI.C.1.e. and VI.C.2.a, below).

B. Groundwater Limitations

1. The use of recycled water shall not cause the underlying groundwater to be degraded, to exceed water quality objectives, unreasonably affect beneficial uses, or cause a condition of pollution or nuisance.

2. The total coliform numbers shall not exceed 2.2 organisms/100 mL median over any seven day period in groundwaters.

VI. PROVISIONS

A. Standard Provisions

1. The Discharger shall comply with all Standard Provisions included in Attachment D of this Order.

2. The Discharger shall comply with the following provisions:

   a. Failure to comply with provisions or requirements of this Order, or violation of other applicable laws or regulations governing discharges from this facility, may subject the Discharger to administrative or civil liabilities, criminal penalties, and/or other enforcement remedies to ensure compliance. Additionally, certain violations may subject the Discharger to civil or criminal enforcement from appropriate local, state, or federal law enforcement entities.

   b. In the event the Discharger does not comply or will be unable to comply for any reason, with any prohibition, discharge limitations (e.g., maximum daily effluent limitation), or receiving water limitation of this Order, the Discharger shall notify the Regional Water Board by telephone (951) 782-4130 within 24 hours of having knowledge of such noncompliance, and shall confirm this notification in writing within five days, unless the Regional Water Board waives confirmation. The written notification shall state the nature, time, duration, and cause of noncompliance, and shall describe the measures being taken to remedy the current noncompliance and, prevent recurrence including, where applicable, a schedule of implementation. Other noncompliance requires written notification as above at the time of the normal monitoring report.

   c. Neither the treatment nor the discharge of pollutants shall create a pollution, contamination, or nuisance as defined by Section 13050 of the CWC.

   d. The Discharger shall take all reasonable steps to minimize or correct any adverse impact on the environment resulting from noncompliance with this Order, including such accelerated or additional monitoring as may be necessary to determine the nature and impact of the noncomplying discharge.

   e. This Order may be modified, revoked and reissued, or terminated for cause including, but not limited to, the following.

      1). Violation of any terms or conditions of this Order;
      2). Obtaining this Order by misrepresentation or failure to disclose fully all relevant facts, or;

   f. In addition to any other grounds specified herein, this permit may be modified or revoked at any time if, on the basis of any data, the Regional Water Board determines that continued discharges may cause unreasonable degradation of the aquatic environment.

g. If an effluent standard or discharge prohibition (including any schedule of compliance specified in such effluent standard or prohibition) is established under Section 307 (a) of the Clean Water Act for a toxic pollutant which is present in the discharge, and such standard or prohibition is more stringent than any limitation for that pollutant in this Order, this Order may be modified or revoked and reissued to conform to the effluent standard or discharge prohibition.

h. The Discharger shall file with the Regional Water Board a Report of Waste Discharge at least 180 days before making any material change in the character, location, or volume of the discharge. A material change includes, but is not limited to, the following:

   1). Adding a major industrial waste discharge to a discharge of essentially domestic sewage, or adding a new process or product by an industrial facility resulting in a change in the character of the waste.
   2). Significantly changing the disposal method or location, such as changing the disposal to another drainage area or water body.
   3). Significantly changing the method of treatment.
   4). Increasing the treatment plant design capacity beyond that specified in this Order.

i. The provisions of this Order are severable, and if any provisions of this Order, or the application of any provision of this Order to any circumstances, is held invalid, the application of such provision to other circumstances, and the remainder of this Order, shall not be affected thereby.

j. The Discharger shall maintain a copy of this Order at the site so that it is available to site operating personnel at all times. Key operating personnel shall be familiar with its content.

k. The Discharger shall optimize chemical additions needed in the treatment process to meet waste discharge requirements so as to minimize total dissolved solid increases in the treated wastewater.

l. Collected screenings, sludge, and other solids removed from liquid wastes shall be disposed of in a manner approved by the Regional Water Board's Executive Officer.

m. If the Discharger demonstrates a correlation between the biological oxygen demand (BOD^5) and total organic carbon (TOC) concentrations in the effluent to the satisfaction of the Executive Officer, compliance with the BOD5 limits contained in this Order may be determined based on analyses of the TOC of the effluent.

n. In the event of any change in control or ownership of land or waste discharge facility presently owned or controlled by the Discharger, the Discharger shall notify the succeeding owner or operator of the existence of this Order by letter, a copy of which shall be forwarded to the Regional Water Board.

o. The treatment facilities shall be designed, constructed, operated, and maintained to prevent inundation or washout due to floods with a 100-year return frequency.

B. Monitoring and Reporting Program (MRP) Requirements

The Discharger shall comply with the MRP, and future revisions thereto, in Attachment E of this Order. This monitoring and reporting program may be modified by the Executive Officer at any time during the term of this Order, and may include an increase in the number of parameters to be monitored, the frequency of the monitoring or the number and size of samples to be collected. Any increase in the number of parameters to be monitored, the frequency of the monitoring or the number and size of samples to be collected may be reduced back to the levels specified in the original monitoring and reporting program at the discretion of the Executive Officer.

C. Special Provisions

1. Reopener Provisions

a. This Order will be reopened to address any changes in State or federal statutes, plans, policies or regulations that would affect the quality requirements for the discharges.

b. This Order may be reopened to include effluent limitations for pollutants determined to be present in the discharge in concentrations that pose a reasonable potential to cause or contribute to violations of water quality objectives.

c. This Order may be reopened and modified in accordance with the requirements set forth at 40 CFR 122 and 124, to include the appropriate conditions or limits to address demonstrated effluent toxicity based on newly available information, or to implement any EPA-approved new State water quality standards applicable to effluent toxicity.

d. This Order may be reopened for modification, or revocation and reissuance, as a result of the detection of a reportable priority pollutant generated by special conditions included in this Order. These special conditions may be, but are not limited to, fish tissue sampling, whole effluent toxicity, monitoring requirements on internal waste stream(s), and monitoring for surrogate parameters. Additional requirements may be included in this Order as a result of the special condition monitoring data.

e. This Order may be reopened to include an appropriate bioaccumulation based effluent limit for mercury if test results (as required in Attachment E of this Order) show that the concentration levels of methylmercury in the fish tissue are at or above 0.3 milligrams per kilogram.

f. This Order may be reopened to incorporate appropriate biosolids requirements if the State Water Resources Control Board and the Regional Water Quality Control Board are given the authority to implement regulations contained in 40 CFR 503.

g. This Order may be reopened, if necessary and appropriate, to specify revised waste discharge requirements based on the results of the investigation required in Section VI.C.2.e., below.

2. Special Studies, Technical Reports and Additional Monitoring Requirements

a. By July 1, 2007, the Discharger shall notify the Executive Officer of its continuous involvement with the comprehensive mercury investigation program currently being conducted by a group of Santa Ana River system dischargers. If the Discharger discontinues its involvement with this comprehensive program, the Discharger shall, within 60 days of that date, submit for the approval of the Executive Officer its plan for the annual testing of mercury levels in fish flesh samples collected from the Santa Ana River, upstream of, at, and downstream of the point of the discharge point. Upon approval, the Discharger shall implement the plan.

b. By July 1, 2007, the Discharger shall submit for approval by the Executive Officer, a report that details the manner in which sampling, monitoring and reporting will be performed as required in the Order.

c. By July 1, 2007, the Discharger shall submit for approval by the Executive Officer, a report that details the proposed offset program and the manner by which TDS and TIN discharges and offsets will be monitored and reported.

d. Toxicity Reduction Requirements.

1) The Discharger shall develop an Initial Investigation Toxicity Reduction Evaluation (IITRE) work plan that describes the steps the Discharger intends to follow if required by Toxicity Requirement f. 4), below. The work plan shall include at a minimum:

a) A description of the investigation and evaluation techniques that will be used to identify potential causes/sources of the exceedance, effluent variability, and/or efficiency of the treatment system in removing toxic substances. This shall include a description of an accelerated chronic toxicity testing program.

b) A description of the methods to be used for investigating and maximizing in-house treatment efficiency and good housekeeping practices.
c) A description of the evaluation process to be used to determine if implementation of a more detailed TRE\TIE is necessary.

2) The Discharger shall implement the IITRE work plan whenever the results of chronic toxicity tests of the effluent exceed:

a) A two month median value of 1.0 TUc for survival or reproduction endpoint or,
b) Any single test value of 1.7 TUc for survival endpoint.

3) The Discharger shall develop a detailed Toxicity Reduction Evaluation and Toxicity Identification Evaluation (TRE/TIE) work plan that shall describe the steps the Discharger intends to follow if the implemented IITRE fails to identify the cause of, or to rectify, the toxicity.

4) The Discharger shall use as guidance, at a minimum, EPA manuals EPA/600/2-88/070 (industrial), EPA/600/4-89-001A (municipal), EPA/600/6-91/005F (Phase I), EPA/600/R-92/080 (Phase II), and EPA-600/R-92/081 (Phase III) to identify the cause(s) of toxicity. If during the life of this Order the aforementioned EPA manuals are revised or updated, the revised/updated manuals may also be used as guidance. The detailed TRE/TIE work plan shall include:

a) Further actions to investigate and identify the cause of toxicity;
b) Actions the Discharger will take to mitigate the impact of the discharge and to prevent the recurrence of toxicity; and
c) A schedule for these actions.

5) The Discharger shall implement the TRE/TIE workplan if the IITRE fails to identify the cause of, or rectify, the toxicity, or if in the opinion of the Executive Officer the IITRE does not adequately address an identified toxicity problem.

6) The Discharger shall assure that adequate resources are available to implement the required TRE/TIE.

e. Discharges to DP-002. The Discharger shall develop and submit a proposed plan and schedule for a hydrogeologic characterization study of the Lincoln/Cota percolation/evaporation ponds site to: 1). determine whether and to what extent the discharge of undisinfected secondary effluent receives treatment equivalent to that provided by conventional tertiary treatment facilities prior to surfacing within Temescal Creek and/or the PBMZ. The plan and schedule shall be implemented upon approval by the Executive Officer. The Discharger's request to increase the volume of waste discharge into the ponds shall not be considered until this investigation is complete.

3. Best Management Practices and Pollution Prevention

a. Pollutant Minimization Program

1) The Discharger shall develop and conduct a Pollutant Minimization Program (PMP) as further described below when there is evidence (e.g., sample results reported as DNQ when the effluent limitation is less than the MDL, sample results from analytical methods more sensitive than those methods required by this Order, presence of whole effluent toxicity, health advisories for fish consumption, results of benthic or aquatic organism tissue sampling) that a priority pollutant is present in the effluent above an effluent limitation and either:

   a) A sample result is reported as DNQ and the effluent limitation is less than the RL; or
   b) A sample result is reported as ND and the effluent limitation is less than the MDL.

2) The PMP shall include, but not be limited to, the following actions and submittals acceptable to the Regional Water Board:

   a) An annual review and semi-annual monitoring of potential sources of the reportable priority pollutant(s), which may include fish tissue monitoring and other bio-uptake sampling;

   b) Quarterly monitoring for the reportable priority pollutant(s) in the influent to the wastewater treatment system;

   c) Submittal of a control strategy designed to proceed toward the goal of maintaining concentrations of the reportable priority pollutant(s) in the effluent at or below the effluent limitation;

   d) Implementation of appropriate cost-effective control measures for the reportable priority pollutant(s), consistent with the control strategy; and

   e) An annual status report that shall be sent to the Regional Water Board including:

      (1) All PMP monitoring results for the previous year;
      (2) A list of potential sources of the reportable priority pollutant(s);
      (3) A summary of all actions undertaken pursuant to the control strategy; and
      (4) A description of actions to be taken in the following year.

4. Construction, Operation and Maintenance Specifications

a. The Discharger's wastewater treatment plant shall be supervised and operated by persons possessing certificates of appropriate grade pursuant to Title 23, Division 3, Chapter 14, California Code of Regulations.

b. The Discharger shall provide safeguards to assure that should there be reduction, loss, or failure of electric power, the Discharger will comply with the requirements of this Order.

c. The Discharger shall update as necessary, the "Operation and Maintenance Manual (O&M Manual)" which it has developed for the treatment facility to conform to latest plant changes and requirements. The O&M Manual shall be readily available to operating personnel onsite. The O&M Manual shall include the following:

   1) Description of the treatment plant table of organization showing the number of employees, duties and qualifications and plant attendance schedules (daily, weekends and holidays, part-time, etc). The description should include documentation that the personnel are knowledgeable and qualified to operate the treatment facility so as to achieve the required level of treatment at all times.
   2) Detailed description of safe and effective operation and maintenance of treatment processes, process control instrumentation and equipment.
   3) Description of laboratory and quality assurance procedures.
   4) Process and equipment inspection and maintenance schedules.
   5) Description of safeguards to assure that, should there be reduction, loss, or failure of electric power, the Discharger will be able to comply with requirements of this Order.
   6) Description of preventive (fail-safe) and contingency (response and cleanup) plans for controlling accidental discharges, and for minimizing the effect of such events. These plans shall identify the possible sources (such as loading and storage areas, power outage, waste treatment unit failure, process equipment failure, tank and piping failure) of accidental discharges, untreated or partially treated waste bypass, and polluted drainage.

5. Special Provisions for Municipal Facilities (POTWs Only)

a. Sewer Collection System Requirements: The Discharger's collection system is part of the system that is subject to this Order. As such, the Discharger must properly operate and maintain its collection system (40 C.F.R. § 122.41(e)). The Discharger must report any non-compliance (40 C.F.R. § 122.41(l)(6) and (7)) and mitigate any discharge from the collection system in violation of this Order (40 C.F.R. § 122.41(d)). See the Order at Standard Provision VI.A.2.b. and Attachment D, subsections I.D, V.E, V.H, and I.C.

   Furthermore, the General Waste Discharge Requirements for Collection System Agencies (Order No. 2006-0003 DWQ) contains requirements for operation and maintenance of collection systems and for reporting and mitigating sanitary sewer overflows. While the Discharger must comply with both Order No. 2006-0003 DWQ and this Order, the General Collection System WDR more clearly and specifically stipulates requirements for operation and maintenance and for reporting and mitigating sanitary sewer overflows. The Discharger and other governmental agencies that are discharging wastewater into the facility are required to obtain enrollment for regulation under Order No. 2006-0003-DWQ.

b. Sludge Disposal Requirements

1) Collected screenings, sludge, and other solids removed from liquid wastes shall be disposed of in a manner that is consistent with State Water Resources Control Board and Integrated Waste Management Board's joint regulations (Title 27) of the California Code of Regulations and approved by the Water Board's Executive Officer.

2) The use and disposal of biosolids shall comply with existing Federal and State laws and regulations, including permitting requirements and technical standards included in 40 CFR 503.

3) Any proposed change in biosolids use or disposal practice from a previously approved practice should be reported to the Executive Officer and EPA Regional Administrator at least 90 days in advance of the change.

4) The Discharger shall take all reasonable steps to minimize or prevent any discharge or biosolids use or disposal that has the potential of adversely affecting human health or the environment.

d. Pretreatment Program

1) The Discharger shall update as necessary and implement an acceptable pretreatment program.

2) The Discharger shall update as necessary the appropriate contractual agreements with all governmental agencies[11]. The contractual agreements shall give the Discharger the authority to implement and enforce the EPA approved pretreatment program within the sewer service areas of the treatment facility. The Discharger shall assure that any other steps necessary to provide this implementation and enforcement authority (e.g. adoption of ordinances, etc.) are taken by all governmental agencies. If a governmental agency has an EPA approved pretreatment program for any portion of the service area of the treatment facility, the Discharger's pretreatment program shall contain provisions ensuring that that governmental agency's program is implemented. In the event that any agency discharging to Discharger's facility fails to effectively implement its individual EPA approved pretreatment program, the Discharger shall implement and enforce its approved program within that agency's service area.

[11] *Member agencies and sewering agencies discharging wastewater into the facility.*

3) The Discharger shall ensure that the POTW[12] pretreatment program for all contributory agencies discharging to the Discharger's treatment facility are implemented and enforced. The Discharger shall be responsible and liable for the performance of all Control Authority pretreatment requirements contained in 40 CFR 403, including any subsequent regulatory revisions to Part 403. Where Part 403 or subsequent revisions place mandatory actions upon the Discharger as Control Authority but does not specify a timetable for completion of the actions, the Discharger shall submit for approval of the Regional Water Board's Executive Officer, a schedule for implementation of the required actions and shall implement the approved schedule. The schedule for implementation shall be submitted within six months from the date that such mandatory actions are established. For violations of pretreatment requirements, the Discharger shall be subject to enforcement actions, penalties, fines and other remedies by the EPA, or other appropriate parties, as provided in the CWA, as amended (33 USC 1351 et seq.). The EPA or the Regional Water Board may also initiate enforcement action against an industrial user (IU) for non-compliance with applicable standards and requirements as provided in the CWA.

4) The Discharger shall perform the pretreatment functions as required in 40 CFR Part 403 including, but not limited to:

   a) Enforce the pretreatment requirements under 40 CFR 403.5 and 403.6;

   b) Implement the necessary legal authorities as provided in 40 CFR 403.8(f)(1);

   c) Implement the programmatic functions as provided in 40 CFR 403.8(f)(2);

   d) Publish a list of significant non-compliance as required by 40 CFR 403.8(f)(2)(vii); and

   e) Provide the requisite funding and personnel to implement the pretreatment program as provided in 40 CFR 403.8(f)(3).

5) The following wastes shall not be introduced into the treatment works:

   a) Wastes which create a fire or explosion hazard in the treatment works;

   b) Wastes which will cause corrosive structural damage to treatment works, but, in no case, wastes with a pH lower than 5.0 unless the works are designed to accommodate such wastes;

---

12 *Publicly owned treatment works.*

c) Wastes at a flow rate and/or pollutant discharge rate which is excessive over relatively short time periods so that there is a treatment process upset and subsequent loss of treatment efficiency;

d) Solid or viscous wastes in amounts that would cause obstruction to the flow in sewers or otherwise interfere with the proper operation of the treatment works.

6) The Discharger shall ensure compliance with any existing or future pretreatment standard promulgated by EPA under Section 307 of the CWA or amendments thereto for any discharge to the municipal system.

7) The Discharger shall comply with effluent standards or prohibitions established under Section 307(a) of the CWA for toxic pollutants within the time provided in the regulations that establish these standards or prohibitions, even if this Order has not yet been modified to incorporate the requirement.

8) The Discharger shall require each user not in compliance with any pretreatment standard to submit periodic notice (over intervals not to exceed nine months) of progress toward compliance with applicable toxic and pretreatment standards developed pursuant to the CWA or amendments thereto. The Discharger shall forward a copy of such notice to the Regional Water Board and to the EPA Regional Administrator.

6. Other Special Provision – Not Applicable

7. Compliance Schedules – DP 001

a. This Order requires the Discharger to achieve compliance with the final limitations for Selenium, Zinc, Dibenzo(a,h)Anthracene, 2,3,7,8-TCDD, and Bis(2-ethylhexyl)phthalate by April 1, 2009. Quarterly reports on progress to achieve compliance with the final limitations shall be submitted.

b. Violation(s) of interim effluent limitations are subject to the same enforcement remedies provided in the Water Code for violation(s) of final effluent limits.

c. This Order will be reopened to consider appropriate changes to the compliance schedule if and as necessary based on submission of additional justification.

VII. COMPLIANCE DETERMINATION

Compliance with the effluent limitations contained in Section IV of this Order will be determined as specified below:

A. General.
Compliance with effluent limitations for priority pollutants shall be determined using sample reporting protocols defined in the MRP and Attachment A of this Order. For purposes of reporting and administrative enforcement by the Regional and State Water Boards, the Discharger shall be deemed out of compliance with effluent limitations if the concentration of the priority pollutant in the monitoring sample is greater than the effluent limitation and greater than or equal to the reporting level (RL).

B. Average Monthly Effluent Limitation (AMEL).
If the average (or when applicable, the median for multiple sample data, see Attachment E Section X.B.5.) of daily discharges over a calendar month exceeds the AMEL for a given parameter, this will represent a single violation, though the Discharger may be considered out of compliance for each day of that month for that parameter (e.g., resulting in 31 days of non-compliance in a 31-day month). If only a single sample is taken during the calendar month and the analytical result for that sample exceeds the AMEL, the Discharger may be considered out of compliance for that calendar month. The Discharger will only be considered out of compliance for days when the discharge occurs. For any one calendar month during which no sample (daily discharge) is taken, no compliance determination can be made for that calendar month.

C. Average Weekly Effluent Limitation (AWEL).
If the average (or when applicable, the median for multiple sample data, see Attachment E Section X.B.5.) of daily discharges over a calendar week exceeds the AWEL for a given parameter, this will represent a single violation, though the Discharger may be considered out of compliance for each day of that week for that parameter, resulting in 7 days of non-compliance. If only a single sample is taken during the calendar week and the analytical result for that sample exceeds the AWEL, the Discharger may be considered out of compliance for that calendar week. The Discharger will only be considered out of compliance for days when the discharge occurs. For any one calendar week during which no sample (daily discharge) is taken, no compliance determination can be made for that calendar week.

D. Maximum Daily Effluent Limitation (MDEL).
If a daily discharge (or when applicable, the median for multiple sample data of a daily discharge, see Attachment E Section X.B.5.) exceeds the MDEL for a given parameter, the Discharger will be considered out of compliance for that parameter for that 1 day only within the reporting period. For any 1 day during which no sample is taken, no compliance determination can be made for that day.

E. Instantaneous Minimum Effluent Limitation.
If the analytical result of a single grab sample is lower than the instantaneous minimum effluent limitation for a parameter, the Discharger will be considered out of compliance for that parameter for that single sample. Non-compliance for each sample will be considered separately (e.g., the results of two grab samples taken within a calendar day that both are lower than the instantaneous minimum effluent limitation would result in two instances of non-compliance with the instantaneous minimum effluent limitation).

F. Instantaneous Maximum Effluent Limitation.
If the analytical result of a single grab sample is higher than the instantaneous maximum effluent limitation for a parameter, the Discharger may be considered out of compliance for that parameter for that single sample. Non-compliance for each sample may be considered separately (e.g., the results of two grab samples taken within a calendar day that both exceed the instantaneous maximum effluent limitation would result in two instances of non-compliance with the instantaneous maximum effluent limitation).

G. 12-Month Running Average Effluent Limitation (12-MRAEL).
Compliance with the 12-month running average limits under Discharge Specification IV.A.1.c., IV.A.1.d., IV.C.1.b., and IV.C.1.c. shall be determined by the arithmetic mean of the last twelve monthly averages.

H. Total Chlorine Residual Limitation (TCR).
Compliance determinations for total chlorine residual shall be based on 99% compliance. To determine 99% compliance with the effluent limitation for total chlorine residual, the following conditions shall be satisfied:

1. The total time during which the total chlorine residual values are above 0.1 mg/L (instantaneous maximum value) shall not exceed 7 hours and 26 minutes in any calendar month;
2. No individual excursion from 0.1 mg/L value shall exceed 5 minutes; and
3. No individual excursion shall exceed 5.0 mg/L.

I. Turbidity Limitations.
The Discharger shall be considered in compliance with Discharge Specifications IV.A.1.e. and IV.C.1.d. if the following conditions are met. If the Discharger is using a properly operating backup turbidimeter, the reading of the backup turbidimeter shall be considered in determining whether there has been an actual noncompliance:

1. There are no excursions above the limits specified in Discharge Specifications IV.A.1.e.(1)(a) and (b) and IV.C.1.e.(1)(a) and (b);
2. Exceedances of the "10 NTU at any time" turbidity requirement do not exceed a duration of one minute.
3. The apparent exceedance was caused by interference with, or malfunction of, the monitoring instrument.

J. Coliform Organism Effluent Limitations.

1. Compliance with the average weekly total coliform limit expressed in Discharge Specification IV.A.1.e.2) and IV.C.1.d.2) shall be based on a median of test results from the previous 7 days. To comply with the limit, the 7-day median MPN must not exceed 2.2 per 100 milliliters on any day during the week. However, only one violation is recorded for each calendar week, even if the 7-day median MPN value is greater than 2.2 for more than one day in the week.
2. Compliance with the average weekly total coliform limit expressed in Discharge Specification IV.C.1.f. shall be based on a median of test results from the previous 7 days. To comply with the limit, the 7-day median MPN must not exceed 23 per 100 milliliters on any day during the week. However, only one violation is recorded for each calendar week, even if the 7-day median MPN value is greater than 23 for more than one day in the week.

K. pH Effluent Limitations.

Pursuant to 40 CFR 401.17, the Discharger shall be in compliance with the pH limitations specified in the Discharge Specification IV.A.1.a, above, provided that both of the following conditions are satisfied:

1. The total time during which the pH values are outside the required range of 6.5-8.5 pH values shall not exceed 7 hours and 26 minutes in any calendar month; and
2. No individual excursion from the range of pH values shall exceed 60 minutes.

L. TDS Increment Limit.

Compliance with Discharge Specifications IV.A.1.c.2) shall be based on flow weighted TDS water supply quality. The Discharger shall provide the necessary calculations showing the overall TDS water supply quality.

M. Priority Pollutants.

The Discharger shall be deemed out of compliance with an effluent limitation if the concentration of the priority pollutant in the monitoring sample is greater than the effluent limitation.

1. Compliance determination shall be based on the reporting level selected from minimum level (ML)[13] specified in Attachment "I" of this Order, unless an alternative reporting level is approved by the Regional Water Board's Executive Officer. When there is more than one ML value for a given substance, the Discharger shall select the ML value that is below the calculated effluent limitation, and use its associated analytical method, listed in Attachment "I" of this Order. If no ML value is below the effluent limitation, then the Regional Water Board will select as the reporting level the lowest ML value and its associated analytical method.

2. When determining compliance with an average monthly limit and more than one sample result is available in a month, the Discharger shall compute the arithmetic mean unless the data set contains one or more reported determinations of detected but not quantified (DNQ) or not detected (ND). In those cases, the Discharger shall compute the median in place of the arithmetic mean in accordance with the following procedure:

    a. The data set shall be ranked from low to high, reported ND determinations lowest, DNQ determinations next, followed by quantified values (if any). The order of the individual ND or DNQ determinations is unimportant.

    b. The median value of the data set shall be determined. If the data set has an odd number of data points, then the median is the middle value. If the data set has an even number of data points, then the median is the average of the two values around the middle unless one or both of the points are ND or DNQ, in which case the median value shall be the lower of the two data points where DNQ is lower than a value and ND is lower than DNQ. If a sample result, or the arithmetic mean or median of multiple sample results, is below the reporting level, and there is evidence that the priority pollutant is present in the effluent above an effluent limitation and the Discharger conducts a pollutant minimization program (PMP)[14] the Discharger shall not be deemed out of compliance.

---

13 *Minimum level is the concentration at which the entire analytical system must give a recognizable signal and acceptable point. The ML is the concentration in a sample that is equivalent to the concentration of the lowest calibration standard analyzed by a specific analytical procedure, assuming that all the method specified sample weights, volumes, and processing steps have been followed.*

14 *The goal of the PMP shall be to reduce all potential sources of a priority pollutant(s) through pollutant minimization (control) strategies, including pollution prevention measures as appropriate, to maintain the effluent concentration at or below the water quality-based effluent limitation.*

N. Non-Priority Pollutants.

The discharge shall be considered to be in compliance with an effluent limitation that is less than or equal to the method detection limit (MDL) specified in 40 CFR 136 if the arithmetic mean of all test results for the monitoring period is less than the constituent effluent limitation. Analytical results that are less than the specified MDL shall be assigned a value of zero.

O. Compliance Determination

Compliance determinations shall be based on available analyses for the time interval associated with the effluent limitation. Where only one sample analysis is available in a specified time interval (e. g., monthly or weekly average), that sample shall serve to characterize the discharge for the entire interval. If quarterly sample results show noncompliance with the average monthly limit and that sample result is used for compliance determinations for each month of the quarter, then three separate violations of the average monthly limit shall be deemed to have occurred.

Compliance with a single effluent limitation which applies to a group of chemicals (e.g., PCBs), based on a single sample shall be determined by considering the concentrations of individual members of the group to be zero if the analytical response for the individual chemical falls below the method detection limit (MDL) for that chemical.

ATTACHMENT A – DEFINITIONS

Arithmetic Mean (μ), also called the average, is the sum of measured values divided by the number of samples. For ambient water concentrations, the arithmetic mean is calculated as follows:

Arithmetic mean = $\mu = \Sigma x / n$ where: Σx is the sum of the measured ambient water concentrations, and n is the number of samples.

Average Monthly Effluent Limitation (AMEL): the highest allowable average of daily discharges over a calendar month, calculated as the sum of all daily discharges measured during a calendar month divided by the number of daily discharges measured during that month.

Average Weekly Effluent Limitation (AWEL): the highest allowable average of daily discharges over a calendar week (Sunday through Saturday), calculated as the sum of all daily discharges measured during a calendar week divided by the number of daily discharges measured during that week.

Best Management Practices (BMPs) are methods, measures, or practices designed and selected to reduce or eliminate the discharge of pollutants to surface waters from point and nonpoint source discharges including storm water. BMPs include structural and non-structural controls, and operation and maintenance procedures, which can be applied before, during, and/or after pollution producing activities.

Bioaccumulative pollutants are those substances taken up by an organism from its surrounding medium through gill membranes, epithelial tissue, or from food and subsequently concentrated and retained in the body of the organism.

Carcinogenic pollutants are substances that are known to cause cancer in living organisms.

Coefficient of Variation (*CV*) is a measure of the data variability and is calculated as the estimated standard deviation divided by the arithmetic mean of the observed values.

Criteria Continuous Concentration (CCC) equals the highest concentration of a pollutant to which aquatic life can be exposed for an extended period of time (4 days) without deleterious effects.

Criteria Maximum Concentration (CMC) equals the highest concentration of a pollutant to which aquatic life can be exposed for a short period of time without deleterious effects.

Daily Discharge: Daily Discharge is defined as either: (1) the total mass of the constituent discharged over the calendar day (12:00 am through 11:59 pm) or any 24-hour period that reasonably represents a calendar day for purposes of sampling (as specified in the permit), for a constituent with limitations expressed in units of mass or; (2) the unweighted arithmetic mean measurement of the constituent over the day for a constituent with limitations expressed in other units of measurement (e.g., concentration).

The daily discharge may be determined by the analytical results of a composite sample taken over the course of one day (a calendar day or other 24-hour period defined as a day) or by the arithmetic mean of analytical results from one or more grab samples taken over the course of the day.

Detected, but Not Quantified (DNQ) are those sample results less than the RL, but greater than or equal to the laboratory's MDL.

Dilution Credit is the amount of dilution granted to a discharge in the calculation of a water quality-based effluent limitation, based on the allowance of a specified mixing zone. It is calculated from the dilution ratio or determined through conducting a mixing zone study or modeling of the discharge and receiving water.

Dilution Ratio is the critical low flow of the upstream receiving water divided by the flow of the effluent discharged.

Effluent Concentration Allowance (ECA) is a value derived from the water quality criterion/objective, dilution credit, and ambient background concentration that is used, in conjunction with the coefficient of variation for the effluent monitoring data, to calculate a long-term average (LTA) discharge concentration. The ECA has the same meaning as waste load allocation (WLA) as used in U.S. EPA guidance (Technical Support Document For Water Quality-based Toxics Control, March 1991, second printing, EPA/505/2-90-001).

Estimated Chemical Concentration is the estimated chemical concentration that results from the confirmed detection of the substance by the analytical method below the ML value.

Existing Discharger means any discharger that is not a new discharger. An existing discharger includes an "increasing discharger" (i.e., an existing facility with treatment systems in place for its current discharge that is or will be expanding, upgrading, or modifying its existing permitted discharge after the effective date of this Policy).

Infeasible means not capable of being accomplished in a successful manner within a reasonable period of time, taking into account economic, environmental, legal, social, and technological factors.

Inland Surface Waters are all surface waters of the State that do not include the ocean, enclosed bays, or estuaries.

Instantaneous Maximum Effluent Limitation: the highest allowable value for any single grab sample or aliquot (i.e., each grab sample or aliquot is independently compared to the instantaneous maximum limitation).

Instantaneous Minimum Effluent Limitation: the lowest allowable value for any single grab sample or aliquot (i.e., each grab sample or aliquot is independently compared to the instantaneous minimum limitation).

Load Allocation (LA) is the portion of receiving water's total maximum daily load that is allocated to one of its nonpoint sources of pollution or to natural background sources.

Maximum Daily Flow is the maximum flow sample of all samples collected in a calendar day.

Maximum Daily Effluent Limitation (MDEL) means the highest allowable daily discharge of a pollutant, over a calendar day (or 24-hour period). For pollutants with limitations expressed in units of mass, the daily discharge is calculated as the total mass of the pollutant discharged over the day. For pollutants with limitations expressed in other units of measurement, the daily discharge is calculated as the arithmetic mean measurement of the pollutant over the day.

MEC: Maximum Effluent Concentration.

Median is the middle measurement in a set of data. The median of a set of data is found by first arranging the measurements in order of magnitude (either increasing or decreasing order). If the number of measurements (n) is odd, then the median = $X_{(n+1)/2}$. If n is even, then the median = $(X_{n/2} + X_{(n/2)+1})/2$ (i.e., the midpoint between the $n/2$ and $n/2+1$).

Method Detection Limit (MDL) is the minimum concentration of a substance that can be measured and reported with 99 percent confidence that the analyte concentration is greater than zero, as defined in 40 CFR 136, Appendix B, revised as of May 14, 1999.

Minimum Level (ML) is the concentration at which the entire analytical system must give a recognizable signal and acceptable calibration point. The ML is the concentration in a sample that is equivalent to the concentration of the lowest calibration standard analyzed by a specific analytical procedure, assuming that all the method specified sample weights, volumes, and processing steps have been followed.

Mixing Zone is a limited volume of receiving water that is allocated for mixing with a wastewater discharge where water quality criteria can be exceeded without causing adverse effects to the overall water body.

New Discharger includes any building, structure, facility, or installation from which there is, or may be, a discharge of pollutants, the construction of which commenced after the effective date of this Policy.

Not Detected (ND) are those sample results less than the laboratory's MDL.

Objectionable Bottom Deposits are an accumulation of materials or substances on or near the bottom of a water body, which creates conditions that adversely impact aquatic life, human health, beneficial uses, or aesthetics. These conditions include, but are not limited to, the accumulation of pollutants in the sediments and other conditions that result in harm to benthic organisms, production of food chain organisms, or fish egg development. The presence of such deposits shall be determined by RWQCB(s) on a case-by-case basis.

Persistent pollutants are substances for which degradation or decomposition in the environment is nonexistent or very slow.

Pollutant Minimization Program (PMP) means waste minimization and pollution prevention actions that include, but are not limited to, product substitution, waste stream recycling,

alternative waste management methods, and education of the public and businesses. The goal of the PMP shall be to reduce all potential sources of a priority pollutant(s) through pollutant minimization (control) strategies, including pollution prevention measures as appropriate, to maintain the effluent concentration at or below the water quality-based effluent limitation. Pollution prevention measures may be particularly appropriate for persistent bioaccumulative priority pollutants where there is evidence that beneficial uses are being impacted. The Regional Water Board may consider cost effectiveness when establishing the requirements of a PMP. The completion and implementation of a Pollution Prevention Plan, if required pursuant to Water Code section 13263.3(d), shall be considered to fulfill the PMP requirements.

Pollution Prevention means any action that causes a net reduction in the use or generation of a hazardous substance or other pollutant that is discharged into water and includes, but is not limited to, input change, operational improvement, production process change, and product reformulation (as defined in Water Code Section 13263.3). Pollution prevention does not include actions that merely shift a pollutant in wastewater from one environmental medium to another environmental medium, unless clear environmental benefits of such an approach are identified to the satisfaction of the SWRCB or RWQCB.

Process Optimization means minor changes to the existing facility and treatment plant operations that optimize the effectiveness of the existing treatment processes.

Public Entity includes the federal government or a state, county, city and county, city, district, public authority, or public agency.

Reporting Level (RL) is the ML (and its associated analytical method) chosen by the Discharger for reporting and compliance determination from the MLs included in this Order. The MLs included in this Order correspond to approved analytical methods for reporting a sample result that are selected by the Regional Water Board either from Appendix 4 of the SIP in accordance with section 2.4.2 of the SIP or established in accordance with section 2.4.3 of the SIP. The ML is based on the proper application of method-based analytical procedures for sample preparation and the absence of any matrix interferences. Other factors may be applied to the ML depending on the specific sample preparation steps employed. For example, the treatment typically applied in cases where there are matrix-effects is to dilute the sample or sample aliquot by a factor of ten. In such cases, this additional factor must be applied to the ML in the computation of the RL.

Source of Drinking Water is any water designated as municipal or domestic supply (MUN) in a RWQCB basin plan.

Standard Deviation (σ) is a measure of variability that is calculated as follows:

$$\sigma = (\Sigma[(x - \mu)^2]/(n - 1))^{0.5}$$

where:

x is the observed value;

μ is the arithmetic mean of the observed values; and

n is the number of samples.

Toxicity Reduction Evaluation (TRE) is a study conducted in a step-wise process designed to identify the causative agents of effluent or ambient toxicity, isolate the sources of toxicity, evaluate the effectiveness of toxicity control options, and then confirm the reduction in toxicity. The first steps of the TRE consist of the collection of data relevant to the toxicity, including additional toxicity testing, and an evaluation of facility operations and maintenance practices, and best management practices. A Toxicity Identification Evaluation (TIE) may be required as part of the TRE, if appropriate. (A TIE is a set of procedures to identify the specific chemical(s) responsible for toxicity. These procedures are performed in three phases (characterization, identification, and confirmation) using aquatic organism toxicity tests.)

Use Attainability Analysis is a structured scientific assessment of the factors affecting the attainment of the use which may include physical, chemical, biological and economic factors as described in 40 CFR 131.10(g) (40 CFR 131.3, revised as of July 1, 1997).

Water Effect Ratio (WER) is an appropriate measure of the toxicity of a material obtained in a site water divided by the same measure of the toxicity of the same material obtained simultaneously in a laboratory dilution water.

12-Month Running Average Effluent Limitation (12-MRAEL): the highest allowable average of monthly discharges over last twelve months, calculated as the sum of all monthly discharges measured during last twelve months divided by the number of monthly discharges measured during that time period.

City of Corona, Department of Water & Power
Wastewater Treatment Plant No. 1

ATTACHMENT B – LOCATION MAP

City of Corona
Department of Water & Power
Wastewater Treatment Plant No. 1
2205 Railroad Street

VICINITY MAP

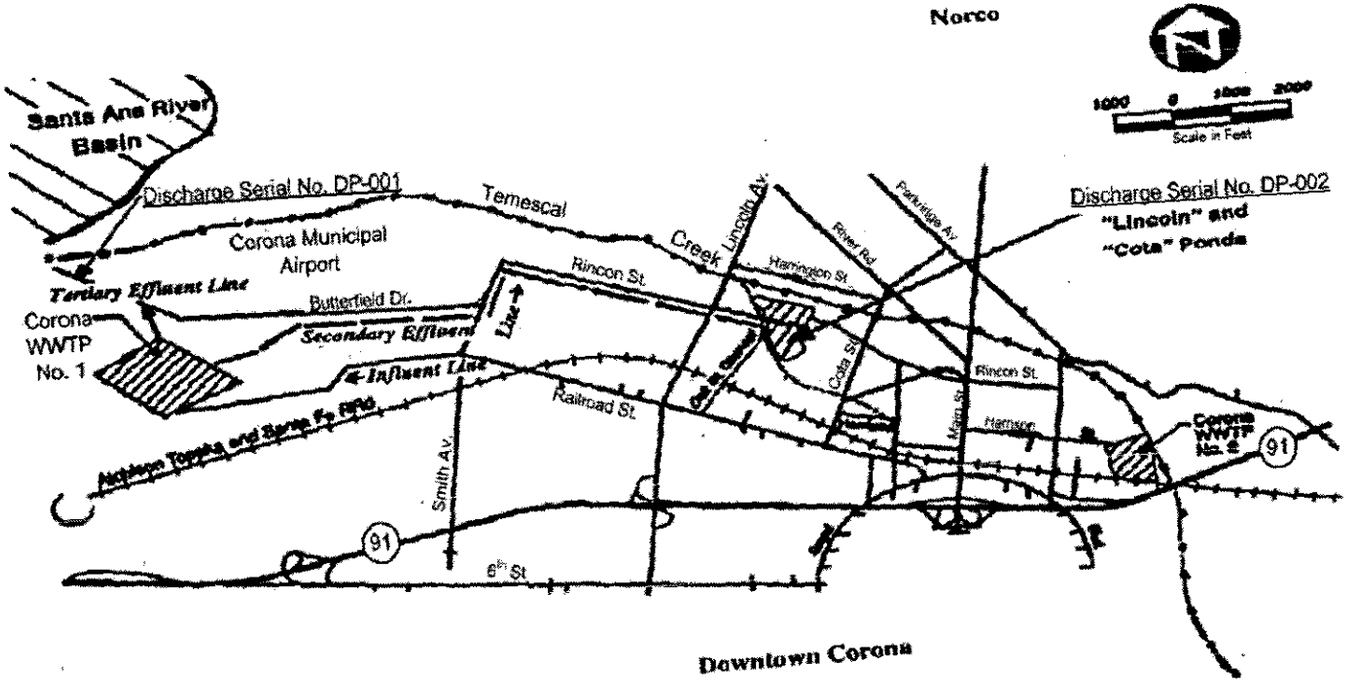

ATTACHMENT C – FLOW SCHEMATIC

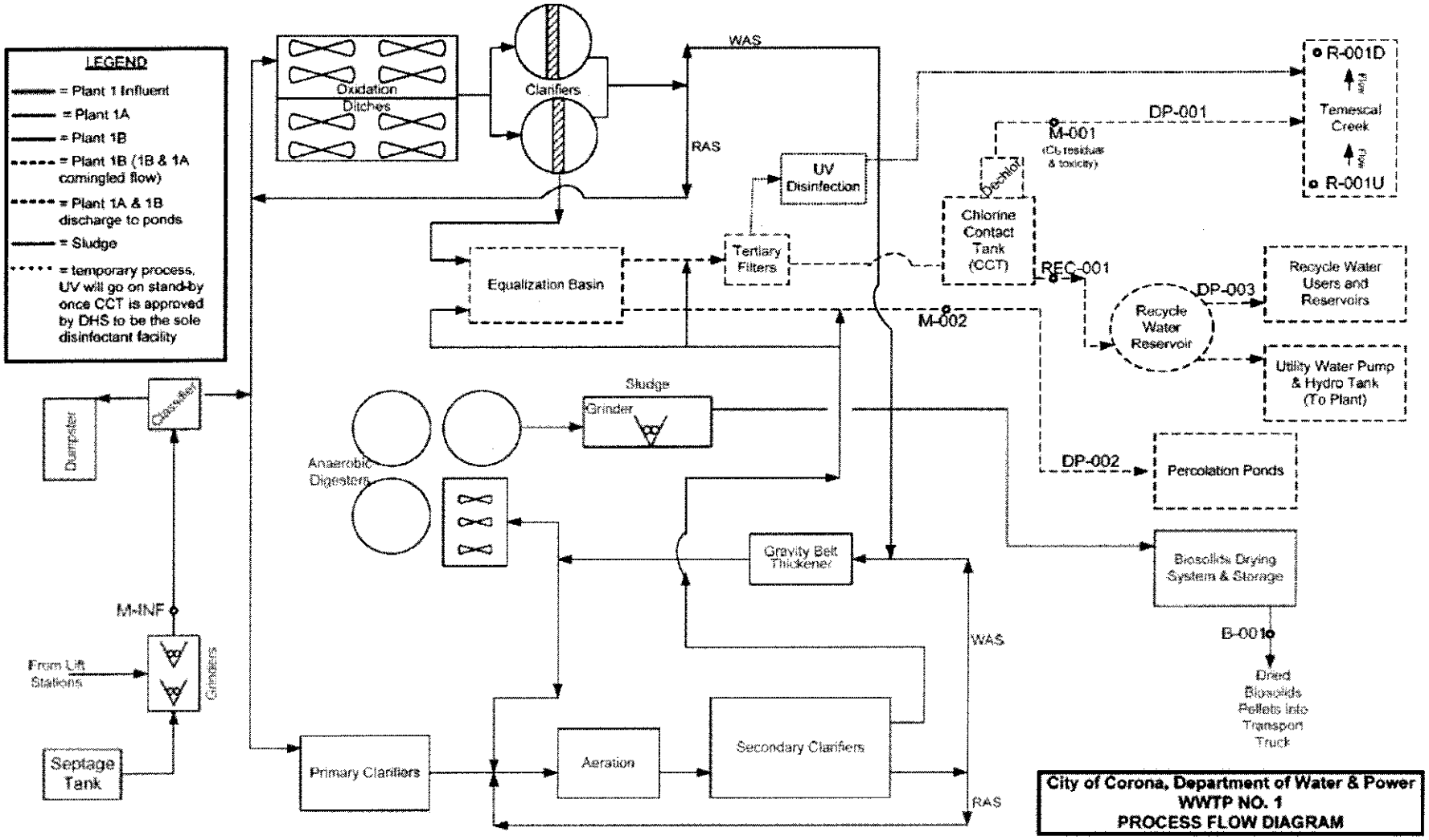

ATTACHMENT D – STANDARD PROVISIONS

I. STANDARD PROVISIONS – PERMIT COMPLIANCE

A. Duty to Comply

1. The Discharger must comply with all of the conditions of this Order. Any noncompliance constitutes a violation of the Clean Water Act (CWA) and the California Water Code (CWC) and is grounds for enforcement action, for permit termination, revocation and reissuance, or modification; or denial of a permit renewal application [*40 CFR §122.41(a)*].

2. The Discharger shall comply with effluent standards or prohibitions established under Section 307(a) of the CWA for toxic pollutants and with standards for sewage sludge use or disposal established under Section 405(d) of the CWA within the time provided in the regulations that establish these standards or prohibitions, even if this Order has not yet been modified to incorporate the requirement [*40 CFR §122.41(a)(1)*].

B. Need to Halt or Reduce Activity Not a Defense

It shall not be a defense for a Discharger in an enforcement action that it would have been necessary to halt or reduce the permitted activity in order to maintain compliance with the conditions of this Order [*40 CFR §122.41(c)*].

C. Duty to Mitigate

The Discharger shall take all reasonable steps to minimize or prevent any discharge or sludge use or disposal in violation of this Order that has a reasonable likelihood of adversely affecting human health or the environment [*40 CFR §122.41(d)*].

D. Proper Operation and Maintenance

The Discharger shall at all times properly operate and maintain all facilities and systems of treatment and control (and related appurtenances) which are installed or used by the Discharger to achieve compliance with the conditions of this Order. Proper operation and maintenance also includes adequate laboratory controls and appropriate quality assurance procedures. This provision requires the operation of backup or auxiliary facilities or similar systems that are installed by a Discharger only when necessary to achieve compliance with the conditions of this Order [*40 CFR §122.41(e)*].

E. Property Rights

1. This Order does not convey any property rights of any sort or any exclusive privileges [*40 CFR §122.41(g)*].

2. The issuance of this Order does not authorize any injury to persons or property or invasion of other private rights, or any infringement of State or local law or regulations [*40 CFR §122.5(c)*].

F. Inspection and Entry

The Discharger shall allow the Regional Water Quality Control Board (RWQCB), State Water Resources Control Board (SWRCB), United States Environmental Protection Agency (USEPA), and/or their authorized representatives (including an authorized contractor acting as their representative), upon the presentation of credentials and other documents, as may be required by law, to [*40 CFR §122.41(i)*] [*CWC 13383(c)*]:

1. Enter upon the Discharger's premises where a regulated facility or activity is located or conducted, or where records are kept under the conditions of this Order [*40 CFR §122.41(i)(1)*];

2. Have access to and copy, at reasonable times, any records that must be kept under the conditions of this Order [*40 CFR §122.41(i)(2)*];

3. Inspect and photograph, at reasonable times, any facilities, equipment (including monitoring and control equipment), practices, or operations regulated or required under this Order [*40 CFR §122.41(i)(3)*];

4. Sample or monitor, at reasonable times, for the purposes of assuring Order compliance or as otherwise authorized by the CWA or the CWC, any substances or parameters at any location [*40 CFR §122.41(i)(4)*].

G. Bypass

1. Definitions

   a. "Bypass" means the intentional diversion of waste streams from any portion of a treatment facility [*40 CFR §122.41(m)(1)(i)*].

   b. "Severe property damage" means substantial physical damage to property, damage to the treatment facilities, which causes them to become inoperable, or substantial and permanent loss of natural resources that can reasonably be expected to occur in the absence of a bypass. Severe property damage does not mean economic loss caused by delays in production [*40 CFR §122.41(m)(1)(ii)*].

2. Bypass not exceeding limitations – The Discharger may allow any bypass to occur which does not cause exceedances of effluent limitations, but only if it is for essential maintenance to assure efficient operation. These bypasses are not subject to the provisions listed in Standard Provisions – Permit Compliance I.G.3, I.G.4, and I.G.5 below [*40 CFR §122.41(m)(2)*].

3. Prohibition of bypass – Bypass is prohibited, and the Regional Water Board may take enforcement action against a Discharger for bypass, unless [*40 CFR §122.41(m)(4)(i)*]:

   a. Bypass was unavoidable to prevent loss of life, personal injury, or severe property damage [*40 CFR §122.41(m)(4)(A)*];

   b. There were no feasible alternatives to the bypass, such as the use of auxiliary treatment facilities, retention of untreated wastes, or maintenance during normal periods of equipment downtime. This condition is not satisfied if adequate back-up equipment should have been installed in the exercise of reasonable engineering judgment to prevent a bypass that occurred during normal periods of equipment downtime or preventive maintenance [*40 CFR §122.41(m)(4)(B)*]; and

   c. The Discharger submitted notice to the Regional Water Board as required under Standard Provisions – Permit Compliance I.G.5 below [*40 CFR §122.41(m)(4)(C)*].

4. The Regional Water Board may approve an anticipated bypass, after considering its adverse effects, if the Regional Water Board determines that it will meet the three conditions listed in Standard Provisions – Permit Compliance I.G.3 above [*40 CFR §122.41(m)(4)(ii)*].

5. Notice

   a. Anticipated bypass. If the Discharger knows in advance of the need for a bypass, it shall submit a notice, if possible at least 10 days before the date of the bypass [*40 CFR §122.41(m)(3)(i)*].

   b. Unanticipated bypass. The Discharger shall submit notice of an unanticipated bypass as required in Standard Provisions - Reporting V.E below (24-hour notice) [*40 CFR Section 122.41(m)(3)(ii)*].

H. Upset

Upset means an exceptional incident in which there is unintentional and temporary noncompliance with technology based permit effluent limitations because of factors beyond the reasonable control of the permittee. An upset does not include noncompliance to the extent caused by operational error, improperly designed treatment facilities, inadequate treatment facilities, lack of preventive maintenance, or careless or improper operation [*40 CFR §122.41(n)(1)*].

1. Effect of an upset. An upset constitutes an affirmative defense to an action brought for noncompliance with such technology based permit effluent limitations if the requirements of Standard Provisions – Permit Compliance I.H.2 below are met. No determination made during administrative review of claims that noncompliance was

caused by upset, and before an action for noncompliance, is final administrative action subject to judicial review [*40 CFR Section 122.41(n)(2)*].

2. Conditions necessary for a demonstration of upset. A Discharger who wishes to establish the affirmative defense of upset shall demonstrate, through properly signed, contemporaneous operating logs or other relevant evidence that [*40 CFR §122.41(n)(3)*]:

   a. An upset occurred and that the Discharger can identify the cause(s) of the upset [*40 CFR §122.41(n)(3)(i)*];

   b. The permitted facility was, at the time, being properly operated [*40 CFR §122.41(n)(3)(i)*];

   c. The Discharger submitted notice of the upset as required in Standard Provisions – Reporting V.E.2.b below (24-hour notice) [*40 CFR Section 122.41(n)(3)(iii)*]; and

   d. The Discharger complied with any remedial measures required under Standard Provisions – Permit Compliance I.C above [*40 CFR §122.41(n)(3)(iv)*].

3. Burden of proof. In any enforcement proceeding, the Discharger seeking to establish the occurrence of an upset has the burden of proof [*40 CFR §122.41(n)(4)*].

II. STANDARD PROVISIONS – PERMIT ACTION

A. General

This Order may be modified, revoked and reissued, or terminated for cause. The filing of a request by the Discharger for modification, revocation and reissuance, or termination, or a notification of planned changes or anticipated noncompliance does not stay any Order condition [*40 CFR §122.41(f)*].

B. Duty to Reapply

If the Discharger wishes to continue an activity regulated by this Order after the expiration date of this Order, the Discharger must apply for and obtain a new permit [*40 CFR §122.41(b)*].

C. Transfers

This Order is not transferable to any person except after notice to the Regional Water Board. The Regional Water Board may require modification or revocation and reissuance of the Order to change the name of the Discharger and incorporate such other requirements as may be necessary under the CWA and the CWC [*40 CFR §122.41(l)(3)*] [*40 CFR §122.61*].

III. STANDARD PROVISIONS – MONITORING

A. Samples and measurements taken for the purpose of monitoring shall be representative of the monitored activity [*40 CFR §122.41(j)(1)*].

B. Monitoring results must be conducted according to test procedures under 40 CFR Part 136 or, in the case of sludge use or disposal, approved under 40 CFR Part 136 unless otherwise specified in 40 CFR Part 503 unless other test procedures have been specified in this Order [*40 CFR §122.41(j)(4)*] [*40 CFR §122.44(i)(1)(iv)*].

IV. STANDARD PROVISIONS – RECORDS

A. Except for records of monitoring information required by this Order related to the Discharger's sewage sludge use and disposal activities, which shall be retained for a period of at least five years (or longer as required by 40 CFR Part 503), the Discharger shall retain records of all monitoring information, including all calibration and maintenance records and all original strip chart recordings for continuous monitoring instrumentation, copies of all reports required by this Order, and records of all data used to complete the application for this Order, for a period of at least three (3) years from the date of the sample, measurement, report or application. This period may be extended by request of the Regional Water Board Executive Officer at any time [*40 CFR §122.41(j)(2)*].

B. Records of monitoring information shall include:

1. The date, exact place, and time of sampling or measurements [*40 CFR §122.41(j)(3)(i)*];
2. The individual(s) who performed the sampling or measurements [*40 CFR §122.41(j)(3)(ii)*];
3. The date(s) analyses were performed [*40 CFR §122.41(j)(3)(iii)*];
4. The individual(s) who performed the analyses [*40 CFR §122.41(j)(3)(iv)*];
5. The analytical techniques or methods used [*40 CFR §122.41(j)(3)(v)*]; and
6. The results of such analyses [*40 CFR §122.41(j)(3)(vi)*].

C. Claims of confidentiality for the following information will be denied [*40 CFR §122.7(b)*]:

1. The name and address of any permit applicant or Discharger [*40 CFR §122.7(b)(1)*]; and
2. Permit applications and attachments, permits and effluent data [*40 CFR §122.7(b)(2)*].

V. STANDARD PROVISIONS – REPORTING

A. Duty to Provide Information

The Discharger shall furnish to the Regional Water Board, SWRCB, or USEPA within a reasonable time, any information which the Regional Water Board, SWRCB, or USEPA may request to determine whether cause exists for modifying, revoking and reissuing, or terminating this Order or to determine compliance with this Order. Upon request, the Discharger shall also furnish to the Regional Water Board, SWRCB, or USEPA copies of records required to be kept by this Order [*40 CFR §122.41(h)*] [*CWC 13267*].

B. Signatory and Certification Requirements

1. All applications, reports, or information submitted to the Regional Water Board, State Water Board, and/or USEPA shall be signed and certified in accordance with Standard Provisions – Reporting V.B.2, V.B.3, V.B.4, and V.B.5 below [*40 CFR Section 122.41(k)*].

2. All permit applications shall be signed by either a principal executive officer or ranking elected official. For purposes of this provision, a principal executive officer of a federal agency includes: (i) the chief executive officer of the agency, or (ii) a senior executive officer having responsibility for the overall operations of a principal geographic unit of the agency (e.g., Regional Administrators of USEPA) [40 CFR Section 122.22(a)(3)].

3. All reports required by this Order and other information requested by the Regional Water Board, State Water Board, or USEPA shall be signed by a person described in Standard Provisions – Reporting V.B.2 above, or by a duly authorized representative of that person. A person is a duly authorized representative only if:

   a. The authorization is made in writing by a person described in Standard Provisions – Reporting V.B.2 above [*40 CFR Section 122.22(b)(1)*];

   b. The authorization specified either an individual or a position having responsibility for the overall operation of the regulated facility or activity such as the position of plant manager, operator of a well or a well field, superintendent, position of equivalent responsibility, or an individual or position having overall responsibility for environmental matters for the company (A duly authorized representative may thus be either a named individual or any individual occupying a named position.) [*40 CFR Section 122.22(b)(2)*]; and

   c. The written authorization is submitted to the Regional Water Board and State Water Board [*40 CFR Section 122.22(b)(3)*].

4. If an authorization under Standard Provisions – Reporting V.B.3 above is no longer accurate because a different individual or position has responsibility for the overall operation of the facility, a new authorization satisfying the requirements of Standard Provisions – Reporting V.B.3 above must be submitted to the Regional Water Board, State Water Board or USEPA prior to or together with any reports, information, or applications, to be signed by an authorized representative [40 CFR Section 122.22(c)].

5. Any person signing a document under Standard Provisions – Reporting V.B.2 or V.B.3 above shall make the following certification:

   "I certify under penalty of law that this document and all attachments were prepared under my direction or supervision in accordance with a system designed to assure that qualified personnel properly gather and evaluate the information submitted. Based on my inquiry of the person or persons who manage the system or those persons directly responsible for gathering the information, the information submitted is, to the best of my knowledge and belief, true, accurate, and complete. I am aware that there are significant penalties for submitting false information, including the possibility of fine and imprisonment for knowing violations" [*40 CFR Section 122.22(d)*].

C. Monitoring Reports

1. Monitoring results shall be reported at the intervals specified in the Monitoring and Reporting Program (Attachment E) in this Order [*40 CFR §122.41(l)(4)*].

2. Monitoring results must be reported on a Discharge Monitoring Report (DMR) form or forms provided or specified by the Regional Water Board or SWRCB for reporting results of monitoring of sludge use or disposal practices [*40 CFR §122.41(l)(4)(i)*].

3. If the Discharger monitors any pollutant more frequently than required by this Order using test procedures approved under 40 CFR Part 136 or, in the case of sludge use or disposal, approved under 40 CFR Part 136 unless otherwise specified in 40 CFR Part 503, or as specified in this Order, the results of this monitoring shall be included in the calculation and reporting of the data submitted in the DMR or sludge reporting form specified by the Regional Water Board [*40 CFR §122.41(l)(4)(ii)*].

4. Calculations for all limitations, which require averaging of measurements, shall utilize an arithmetic mean unless otherwise specified in this Order [*40 CFR §122.41(l)(4)(iii)*].

D. Compliance Schedules

Reports of compliance or noncompliance with, or any progress reports on, interim and final requirements contained in any compliance schedule of this Order, shall be submitted no later than 14 days following each schedule date [*40 CFR §122.41(l)(5)*].

E. Twenty-Four Hour Reporting

1. The Discharger shall report any noncompliance that may endanger health or the environment. Any information shall be provided orally within 24 hours from the time the Discharger becomes aware of the circumstances. A written submission shall also be provided within five (5) days of the time the Discharger becomes aware of the circumstances. The written submission shall contain a description of the noncompliance and its cause; the period of noncompliance, including exact dates and times, and if the noncompliance has not been corrected, the anticipated time it is expected to continue; and steps taken or planned to reduce, eliminate, and prevent reoccurrence of the noncompliance [*40 CFR §122.41(l)(6)(i)*].

2. The following shall be included as information that must be reported within 24 hours under this paragraph [*40 CFR §122.41(l)(6)(ii)*]:

   a. Any unanticipated bypass that exceeds any effluent limitation in this Order [*40 CFR §122.41(l)(6)(ii)(A)*].

   b. Any upset that exceeds any effluent limitation in this Order [*40 CFR §122.41(l)(6)(ii)(B)*].

3. The Regional Water Board may waive the above-required written report under this provision on a case-by-case basis if an oral report has been received within 24 hours [*40 CFR §122.41(l)(6)(iii)*].

F. Planned Changes

The Discharger shall give notice to the Regional Water Board as soon as possible of any planned physical alterations or additions to the permitted facility. Notice is required under this provision only when [*40 CFR §122.41(l)(1)*]:

1. The alteration or addition to a permitted facility may meet one of the criteria for determining whether a facility is a new source in 40 CFR §122.29(b) [*40 CFR §122.41(l)(1)(i)*]; or

2. The alteration or addition could significantly change the nature or increase the quantity of pollutants discharged. This notification applies to pollutants which are subject neither to effluent limitations in this Order nor to notification requirements under 40 CFR Part 122.42(a)(1) (see Additional Provisions—Notification Levels VII.A.1) [*40 CFR §122.41(l)(1)(ii)*].

3. The alteration or addition results in a significant change in the Discharger's sludge use or disposal practices, and such alteration, addition, or change may justify the application of permit conditions that are different from or absent in the existing permit, including notification of additional use or disposal sites not reported during the permit application process or not reported pursuant to an approved land application plan [*40 CFR §122.41(l)(1)(iii)*].

G. Anticipated Noncompliance

The Discharger shall give advance notice to the Regional Water Board or SWRCB of any planned changes in the permitted facility or activity that may result in noncompliance with General Order requirements [*40 CFR §122.41(l)(2)]*.

H. Other Noncompliance

The Discharger shall report all instances of noncompliance not reported under Standard Provisions – Reporting V.C, V.D, and V.E above at the time monitoring reports are submitted. The reports shall contain the information listed in Standard Provision – Reporting V.E above [*40 CFR Section 122.41(l)(7)*].

I. Other Information

When the Discharger becomes aware that it failed to submit any relevant facts in a permit application, or submitted incorrect information in a permit application or in any report to the Regional Water Board, SWRCB, or USEPA, the Discharger shall promptly submit such facts or information [*40 CFR §122.41(l)(8)*].

VI. STANDARD PROVISIONS – ENFORCEMENT

A. The Regional Water Board is authorized to enforce the terms of this permit under several provisions of the CWC, including, but not limited to, sections 13385, 13386, and 13387.

VII. ADDITIONAL PROVISIONS – NOTIFICATION LEVELS

A. Publicly-Owned Treatment Works (POTWs)

All POTWs shall provide adequate notice to the Regional Water Board of the following [*40 CFR Section 122.42(b)*]:

1. Any new introduction of pollutants into the POTW from an indirect discharger that would be subject to Sections 301 or 306 of the CWA if it were directly discharging those pollutants [*40 CFR Section 122.42(b)(1)*]; and

2. Any substantial change in the volume or character of pollutants being introduced into that POTW by a source introducing pollutants into the POTW at the time of adoption of the Order [*40 CFR Section 122.42(b)(2)*].

3. Adequate notice shall include information on the quality and quantity of effluent introduced into the POTW as well as any anticipated impact of the change on the quantity or quality of effluent to be discharged from the POTW [*40 CFR Section 122.42(b)(3)*].

Attachment E – Monitoring and Reporting Program

Table of Contents

Attachment E – Monitoring and Reporting Program (MRP) E-2
I. General Monitoring Provisions E-2
A. General Monitoring Provision E-2
II. Monitoring Locations E-6
III. Influent Monitoring Requirements E-7
A. Monitoring Locations at M-INF E-7
IV. Effluent Monitoring Requirements E-8
A. Effluent Monitoring Locations for DP 001 ..... E-9
V. Whole Effluent Toxicity Testing Requirements E-11
A. Toxicity Monitoring Requirements at M-001 ..... E-11
VI. Land Discharge Monitoring Requirements E-13
A. Effluent Monitoring Location for DP 002 ..... E-13
VII. Reclamation Monitoring Requirements E-14
A. Monitoring Location REC-001 for DP-003 ..... E-14
B. Monitoring Users E-15
VIII. Receiving Water Monitoring Requirements – Surface Water and Groundwater E-15
A. Monitoring Location R-001U for Surface Water E-15
B. Monitoring Location R-001D for Surface Water: E-16
C. Regional Monitoring for Fish Flesh Testing: E-16
D. Groundwater Monitoring E-16
IX. Other Monitoring Requirements E-17
A. Biosolids Monitoring E-17
B. Stormwater Monitoring – Not Applicable E-17
C. Water Supply Monitoring E-17
D. Pretreatment Monitoring and Reporting E-17
E. Salt Offset Program Monitoring and Reporting E-20
X. Reporting Requirements E-20
A. General Monitoring and Reporting Requirements E-20
B. Self Monitoring Reports (SMRs) E-22
C. Discharge Monitoring Reports (DMRs) E-25
D. Other Reports – Not Applicable E-26

ATTACHMENT E – MONITORING AND REPORTING PROGRAM (MRP)

The Code of Federal Regulations (CFR) at 40 CFR §122.48 requires that all NPDES permits specify monitoring and reporting requirements. CWC Sections 13267 and 13383 also authorize the Regional Water Quality Control Board (RWQCB) to require technical and monitoring reports. This MRP establishes monitoring and reporting requirements that implement the federal and California regulations.

I. GENERAL MONITORING PROVISIONS

A. General Monitoring Provision

1. All sampling and sample preservation shall be in accordance with the current edition of "*Standard Methods for the Examination of Water and Wastewater*" (American Public Health Association).

2. All laboratory analyses shall be performed in accordance with test procedures under 40 CFR 136 (revised as of May 14, 1999) "Guidelines Establishing Test Procedures for the Analysis of Pollutants," promulgated by the United States Environmental Protection Agency (EPA), unless otherwise specified in this MRP. In addition, the Regional Water Board and/or EPA, at their discretion, may specify test methods that are more sensitive than those specified in 40 CFR 136. (See also I.A.6., below)

3. Chemical, bacteriological, and bioassay analyses shall be conducted at a laboratory certified for such analyses by the California Department of Health Services in accordance with the provision of Water Code Section 13176, and must include quality assurance/quality control data with their reports, or EPA or at laboratories approved by the Regional Water Board's Executive Officer

4. Whenever the Discharger monitors any pollutant more frequently than is required by this Order, the results of this monitoring shall be included in the calculation and reporting of the data submitted in the discharge monitoring report specified by the Executive Officer.

5. In conformance with federal regulations 40 CFR 122.45(c), analyses to determine compliance with the effluent limitations for metals shall be conducted using the total recoverable method. For Chromium (VI), the dissolved method in conformance with 40 CFR 136 may be used to measure compliance with the Chromium (VI) limitation.

6. For effluent wastewater monitoring:

   a. The discharger shall require its testing laboratory to calibrate the analytical system down to the minimum level (ML)[1] specified in Attachment "I" for priority pollutants with effluent limitations in this Order, unless an alternative minimum level is approved by the Regional Water Board's Executive Officer. When there is more than one ML value for a given substance, the discharger shall use the ML values, and their associated analytical methods, listed in Attachment "I" that are below the calculated effluent limitation. The discharger may select any one of those cited analytical methods for compliance determination. If no ML value is below the effluent limitation, then the lowest ML value and its associated analytical method, listed in Attachment "I" shall be used. Any internal quality control data associated with the sample must be reported when requested by the Executive Officer. The Regional Water Board will reject the quantified laboratory data if quality control data is unavailable or unacceptable.

   b. The discharger shall report the results of analytical determinations for the presence of chemical constituents in a sample using the following reporting protocols:

      1) Sample results greater than or equal to the reported ML shall be reported as measured by the laboratory (i.e., the measured chemical concentration in the sample).

      2) Sample results less than the reported ML, but greater than or equal to the laboratory's current Method Detection Limit (MDL)[2], shall be reported as "Detected, but Not Quantified," or "DNQ." The estimated chemical concentration of the sample shall also be reported.

      3) Sample results not detected above the laboratory's MDL shall be reported as "not detected" or "ND."

   c. The Discharger shall submit to the Regional Water Board reports necessary to determine compliance with effluent limitations in this Order and shall follow the chemical nomenclature and sequential order of priority pollutant constituents shown in Attachment "G" – Priority Pollutant Lists. The Discharger shall report with each sample result:

      1) The reporting level achieved by the testing laboratory; and

---

1 *Minimum level is the concentration at which the entire analytical system must give a recognizable signal and acceptable point. The ML is the concentration in a sample that is equivalent to the concentration of the lowest calibration standard analyzed by a specific analytical procedure, assuming that all the method specified sample weights, volumes, and processing steps have been followed.*

2 *MDL is the minimum concentration of a substance that can be measured and reported with 99 percent confidence that the analytical concentration is greater than zero, as defined in 40 CFR 136, Appendix B, revised as of May 14, 1999.*

2) The laboratory's current MDL, as determined by the procedure found in 40 CFR 136 (revised as of May 14, 1999).

d. For receiving water monitoring and for those priority pollutants without effluent limitations, the Discharger shall require its testing laboratory to quantify constituent concentrations to the lowest achievable MDL as determined by the procedure found in 40 CFR 136 (revised as of May 14, 1999). In situations where the most stringent applicable receiving water objective (freshwater or human health (consumption of organisms only), as specified for that pollutant in 40 CFR 131.38[3] is below the minimum level value specified in Attachment "G" and the Discharger cannot achieve an MDL value for that pollutant below the ML value, the Discharger shall submit justification why a lower MDL value cannot be achieved. Justification shall be submitted together with monthly monitoring reports.

7. For non-priority pollutants monitoring, all analytical data shall be reported with identification of practical quantitation levels and with method detection limits, as determined by the procedure found in 40 CFR 136 (revised as of May 14, 1999).

8. The Discharger shall have, and implement an acceptable written quality assurance (QA) plan for laboratory analyses. Duplicate chemical analyses must be conducted on a minimum of ten percent (10%) of the samples, or at least one sample per month, whichever is greater. A similar frequency shall be maintained for analyzing spiked samples. When requested by the Regional Water Board or EPA, the Discharger will participate in the NPDES discharge monitoring report QA performance study.

9. For every item of monitoring data where the requirements are not met, the monitoring report shall include a statement discussing the reasons for noncompliance, the actions undertaken or proposed that will bring the discharge into full compliance with requirements at the earliest time, and an estimate of the date when the Discharger will be in compliance. The Discharger shall notify the Regional Water Board by letter when compliance with the time schedule has been achieved.

10. The Discharger shall assure that records of all monitoring information are maintained and accessible for a period of at least five years (this retention period supercedes the retention period specified in Section IV.A. of Attachment D) from the date of the sample, report, or application. This period of retention shall be extended during the course of any unresolved litigation regarding this discharge or by the request of the Regional Water Board at any time. Records of monitoring information shall include:

    a. The information listed in Attachment D- IV Standard Provisions – Records, subparagraph B. of this Order;

---

3 *See Federal Register/ Vol. 65, No. 97 / Thursday, May 18, 2000 / Rules and Regulations.*

b. The laboratory which performed the analyses;

c. The date(s) analyses were performed;

d. The individual(s) who performed the analyses;

e. The modification(s) to analytical techniques or methods used;

f. All sampling and analytical results, including

   1) Units of measurement used;
   2) Minimum reporting level for the analysis (minimum level, practical quantitation level (PQL));
   3) Results less than the reporting level but above the method detection limit (MDL);
   4) Data qualifiers and a description of the qualifiers;
   5) Quality control test results (and a written copy of the laboratory quality assurance plan);
   6) Dilution factors, if used; and
   7) Sample matrix type.

g. All monitoring equipment calibration and maintenance records;
h. All original strip charts from continuous monitoring devices;
i. All data used to complete the application for this Order; and,
j. Copies of all reports required by this Order.
k. Electronic data and information generated by the Supervisory Control And Data Acquisition (SCADA) System.

11. The flow measurement system shall be calibrated at least once per year or more frequently, to ensure continued accuracy.

12. All monitoring instruments and devices used by the Discharger to fulfill the prescribed monitoring program shall be properly maintained and calibrated as necessary to ensure their continued accuracy. In the event that continuous monitoring equipment is out of service for greater than a 24-hour period, the Discharger shall obtain a representative grab sample each day the equipment is out of service. The Discharger shall correct the cause(s) of failure of the continuous monitoring equipment as soon as practicable. In its monitoring report, the Discharger shall specify the period(s) during which the equipment was out of service and if the problem has not been corrected, shall identify the steps which the Discharger is taking or proposes to take to bring the equipment back into service and the schedule for these actions.

13. Monitoring and reporting shall be in accordance with the following:

    a. Samples and measurements taken for the purpose of monitoring shall be representative of the monitored activity.

    b. The monitoring and reporting of influent, effluent, and sludge shall be done more frequently as necessary to maintain compliance with this Order and or as specified in this Order.

c. Whenever the Discharger monitors any pollutant more frequently than is required by this Order, the results of this monitoring shall be included in the calculation and reporting of the data submitted in the discharge monitoring report specified by the Executive Officer.

d. A "grab" sample is defined as any individual sample collected in less than 15 minutes.

e. A composite sample is defined as a combination of no fewer than eight individual grab samples obtained over the specified sampling period. The volume of each individual grab sample shall be proportional to the discharge flow rate at the time of sampling. The compositing period shall equal the specific sampling period, or 24 hours, if no period is specified.

f. Daily samples shall be collected on each day of the week.

g. Monthly samples shall be collected on any representative day of each month.

h. Quarterly samples: A representative grab sample shall be taken on any representative day of January, April, July, and October and test results shall be reported in micrograms/liter (ug/L) by the last day of the month following the month that the sample was taken.

i. Semi-annual samples shall be collected in January and July.

j. Annual samples shall be collected in accordance with the following schedule:

Table 1. Annual Sampling Schedule

Year	Annual Samples
2007	January
2008	April
2009	July
2010	October
2011	January
2012	April

II. MONITORING LOCATIONS

The Discharger shall establish the following monitoring locations to demonstrate compliance with the effluent limitations, discharge specifications, and other requirements in this Order:

Table 2. Monitoring Station Locations

Discharge Point Name	Monitoring Location Name	Monitoring Location Description	Latitude	Longitude
--	M-INF	Plant No. 1 Influent at the Headworks	33°53'25"	117°36'35"
001	M-001	Tertiary effluent to Temescal Creek after dechlorination chamber	33°53'35"	117°36'33"
002	M-002	secondary effluent to Percolation Ponds	33°53'30"	117°36'29"
003	REC-001	tertiary effluent for Recycled Water Reuse in the effluent chamber of chlorine contact tank	33°53'35"	117°36'34"
--	R-001U	100 feet upstream of Creek discharge	33°54'4"	117°35'44"
--	R-001D	500 feet downstream of Creek discharge	33° 53'30"	117°36'32"

III. INFLUENT MONITORING REQUIREMENTS

A. Monitoring Locations at M-INF

1. Sampling stations shall be established for the points of inflow to the treatment plant. The sampling station(s) shall be located upstream of any in-plant return flows and where representative sample(s) of the influent of the treatment plant can be obtained.

2. The Discharger shall monitor the influent to the facility at Monitoring Location M-INF as follows. If more than one analytical test method is listed for a given parameter, the Discharger must select from the listed methods and corresponding Minimum Level:

Table 3. Influent Monitoring Requirements

Constituent	Units	Type of Sample	Minimum Frequency of Sampling & Analysis	Required Analytical Test Method and ML
Flow	MGD	Recorder/Totalizer	Continuous	See Section I.A.3, above, of this MRP
Specific Conductance	µmhos/cm	Recorder	Continuous	See Section I.A.3
pH	pH units	Recorder	Continuous	See Section I.A.3
TOC	mg/L	Composite	Daily	See Section I.A.3
BOD_5	mg/L	Composite	weekly	See Section I.A.3
Total Suspended Solids	mg/L	Composite	weekly	See Section I.A.3
Total Inorganic Nitrogen (TIN)	mg/L	Grab	Monthly	See Section I.A.3
Ammonia-Nitrogen	mg/L	Grab	Monthly	See Section I.A.3
Total Dissolved Solids	mg/L	composite	Monthly	See Section I.A.3
Aluminum	mg/L	Composite	Quarterly	See Section I.A.3
Boron	mg/L	Composite	Quarterly	See Section I.A.3

Table 3. Influent Monitoring Requirements

Constituent	Units	Type of Sample	Minimum Frequency of Sampling & Analysis	Required Analytical Test Method and ML
Chloride	mg/L	Composite	Quarterly	See Section I.A.3
Manganese	mg/L	Composite	Quarterly	See Section I.A.3
Sulfate	mg/L	Composite	Quarterly	See Section I.A.3
Total Hardness	mg/L	Composite	Quarterly	See Section I.A.3
Fluoride	mg/L	Composite	Quarterly	See Section I.A.3
Arsenic	µg/L	Composite	Quarterly	See Section I.A.2. above, of this MRP
Cadmium	µg/L	Composite	Quarterly	See Section I.A.2.
Copper	µg/L	Composite	Quarterly	See Section I.A.2.
Lead	µg/L	Composite	Quarterly	See Section I.A.2.
Mercury	µg/L	Composite	Quarterly	See Section I.A.2.
Nickel	µg/L	Composite	Quarterly	See Section I.A.2.
Selenium	µg/L	Composite	Quarterly	See Section I.A.2.
Silver	µg/L	Composite	Quarterly	See Section I.A.2.
Total Chromium or Chromium VI	µg/L	Composite	Quarterly	See Section I.A.2.
Mercury	µg/L	Composite	Quarterly	See Section I.A.2.
Zinc	µg/L	Composite	Quarterly	See Section I.A.2.
Cyanide (Free)	µg/L	Grab	Quarterly	See Section I.A.2.
4,4'-DDT	µg/L	Composite	Quarterly	See Section I.A.2.
Dibenzo(a,h)Anthracene	µg/L	Composite	Quarterly	See Section I.A.2.
2,3,7,8-TCDD	µg/l	Composite	Quarterly	See Section I.A.2.
Bis(2-ethylhexyl) phthalate	µg/L	Composite	Quarterly	See Section I.A.2.
Volatile organic portion of EPA Priority Pollutants[4] (See Attachment "G")	µg/L	Grab	Annually	See Section I.A.2.
Remaining EPA Priority Pollutants[5] (See Attachment "G")	µg/L	Composite	Annually	See Section I.A.2.

IV. EFFLUENT MONITORING REQUIREMENTS

The Discharger shall monitor tertiary effluent at monitoring locations as follows. If more than one analytical test method is listed for a given parameter, the Discharger may select from the listed methods and associated Reporting Level[6]:

A. Effluent Monitoring Locations for DP 001

1. The Discharger shall monitor tertiary treated effluent for Discharge Point 001 at Monitoring Location M-001 as follows.

Table 4. Tertiary Effluent Monitoring at M-001

Constituent	Units	Type of Sample	Minimum Frequency of Sampling & Analysis	Required Analytical Test Method and ML
Flow	mgd	Recorder/ Totalizer	Continuous	See Sections I.A.2.& I.A.3. above of this MRP
Specific Conductance	µmhos/cm	Recorder	"	See Sections I.A.2.& I.A.3. above of this MRP
pH	pH units	"	"	See Sections I.A.2.& I.A.3. above of this MRP
Turbidity[7]	NTU	"	"	See Sections I.A.2.& I.A.3. above of this MRP
CT[8]	mg/L-min	Recorder	Continuous	See Section I.A.3., above, of this MRP
Total Chlorine residual	mg/L	Recorder	Continuous	"
TOC	mg/L	Composite	Daily	"
Coliform Organisms	MPN per 100 mL	Grab	Daily	"
BOD_5	mg/L	Composite	Weekly	"
Total Suspended Solids	mg/L	Composite	Weekly	"
Ammonia-Nitrogen	mg/L	Composite	Weekly	"
Temperature	^0C	grab	Weekly	"
Total Dissolved Solids	mg/L	Composite	Monthly	"
Total Hardness	mg/L	Composite	Monthly	"
Total Inorganic Nitrogen	mg/L	Composite	Monthly	"
Nitrate Nitrogen	mg/L	Composite	Monthly	"

4 *EPA priority pollutants are those remaining volatile organic pollutants listed in Attachment "C" which are not specifically listed in this monitoring program table.*

5 *Remaining EPA priority pollutants are those pollutants listed in Attachment "C" which are not volatile organics and pollutants not specifically listed in this monitoring program table.*

6 *Reporting Level (RL) Selection: When there is more than one ML value for a given substance, the Regional Water Board shall include as RLs in the permit, all ML values, and their associated analytical methods, listed in Appendix 4 of the SIP that are below the calculated effluent limitation. The Discharger may select any one of those cited analytical methods for compliance determination. If no ML value is below the effluent limitation, then the Regional Water Board shall select as the RL the lowest ML value and its associated analytical method listed in Appendix 4 for inclusion in the permit.*

7 *Turbidity analysis shall be continuous, performed by a continuous recording turbidimeter. Compliance with the daily average operating filter effluent turbidity shall be determined by averaging the levels of recorded turbidity taken at a minimum of four-hour intervals over a 24-hour period. The results of the daily average turbidity determinations shall be reported monthly.*

8 *CT is the product of total chlorine residual and modal contact time measured at the same point.*

Table 4. Tertiary Effluent Monitoring at M-001

Constituent	Units	Type of Sample	Minimum Frequency of Sampling & Analysis	Required Analytical Test Method and ML
Toxicity Monitoring	TUc	See Section D, Below	Monthly	See Section D, Below
Chromium VI	µg/L	Composite	Monthly	" and ML 5 µg/l
Mercury	µg/L	Composite	Monthly	" and ML 0.2 µg/l
Selenium	µg/L	Composite	Monthly	" and ML 2 µg/l
Zinc	µg/L	Composite	Monthly	See Sections I.A.2., I.A.3. above of this MRP
Cyanide (Free)	µg/L	Grab	Monthly	", and ML 5 µg/l or less
Dibenzo(a,h)Anthracene	µg/L	Composite	Monthly	", and ML 0.1 µg/l or less
2,3,7,8-TCDD	ρg/L (parts-per-quadrillion)	Composite	Monthly	", and ML 1 ρg/l or less
Bis(2-ethylhexyl) phthalate	µg/L	Composite	Monthly	", and ML 5 µg/l or less
4,4'-DDT	µg/L	Composite	Quarterly	", and ML 0.05 µg/l or less
Aluminum	mg/L	Composite	Quarterly	See Sections I.A.2., I.A.3. above of this MRP
Bicarbonate	mg/L	Composite	Quarterly	"
Boron	mg/L	Composite	Quarterly	"
Calcium	mg/L	Composite	Quarterly	"
Carbonate	mg/L	Composite	Quarterly	"
Chloride	mg/L	Composite	Quarterly	"
Fluoride	mg/L	Composite	Quarterly	"
Iron	mg/L	Composite	Quarterly	"
Magnesium	mg/L	Composite	Quarterly	"
Manganese	mg/L	Composite	Quarterly	"
Sodium	mg/L	Composite	Quarterly	"
Sulfate	mg/L	Composite	Quarterly	"
Total organic carbon	mg/L	Composite	Quarterly	"
Arsenic	µg/L	Composite	Quarterly, (See IV.A.2., below)	"
Barium	µg/L	Composite	Quarterly, (See IV.A.2., below)	"
Cobalt	µg/L	Composite	Quarterly, (See IV.A.2., below)	"
Cadmium	µg/L	Composite	Quarterly, (See IV.A.2., below)	" and ML 0.5 µg/l
Copper	µg/L	Composite	Quarterly, (See IV.A.2., below)	See Sections I.A.2., I.A.3. & I.B., above of this MRP and ML 5 µg/l
Lead	µg/L	Composite	Quarterly, (See IV.A.2., below)	"and ML 2 µg/l
Nickel	µg/L	Composite	Quarterly, (See IV.A.2., below)	"
Silver	µg/L	Composite	Quarterly, (See IV.A.2., below)	"and ML 1 µg/l

Table 4. Tertiary Effluent Monitoring at M-001

Constituent	Units	Type of Sample	Minimum Frequency of Sampling & Analysis	Required Analytical Test Method and ML
Remaining volatile organic portion of EPA Priority Pollutants (See Attachment "G")	µg/L	grab	Annually (See IV. A.3., below)	See Sections I.A.2., I.A.3. above of this MRP
Remaining EPA Priority Pollutants (See Attachment "G")	µg/L	Composite	Annually (See IV. A.3., below)	See Sections I.A.2., I.A.3. above of this MRP

2. The monitoring frequency for those priority pollutants that are detected during the required quarterly monitoring at a concentration greater than the concentration specified for that pollutant[9] in Attachment I shall be accelerated to monthly. To return to the monitoring frequency specified, the Discharger shall request and receive approval from the Regional Water Board's Executive Officer or designee.

3. The monitoring frequency for those priority pollutants that are detected during the required annual monitoring at a concentration greater than the concentration specified for that pollutant[10] in Attachment I shall be accelerated to quarterly for one year. To return to the monitoring frequency specified, the Discharger shall request and receive approval from the Regional Water Board's Executive Officer or designee.

V. WHOLE EFFLUENT TOXICITY TESTING REQUIREMENTS

A. Toxicity Monitoring Requirements at M-001

1. The Discharger shall conduct critical life stage chronic toxicity testing in accordance with Method 1002.0 - Survival and Reproduction test for water flea, *Ceriodaphnia dubia* as specified in "Short-term Methods for Estimating the Chronic Toxicity of Effluents and Receiving Waters to Freshwater Organisms", Fourth Edition, Environmental Monitoring Systems Laboratory, U.S. Environmental Protection Agency 2002, Cincinnati, Ohio (October 2002, EPA-821-R-02-013).

2. The discharger shall establish procedures to ensure that the toxicity testing laboratory notifies the discharger of the results of toxicity testing within twenty-four hours of completing such tests.

---

9 *For those priority pollutants without specified criteria values, accelerated monitoring is not required.*

10 *For those priority pollutants without specified criteria values, accelerated monitoring is not required.*

3. The discharger shall increase the frequency of chronic toxicity testing to every two weeks whenever any test result exceeds 1.0 TUc. The first test under the accelerated schedule shall be conducted within two weeks of receiving notice of the test which exceeds 1.0 TUc, and every two weeks thereafter. The discharger may resume the regular test schedule when two consecutive chronic toxicity tests result in 1.0 TUc, or when the results of the Initial Investigation Reduction Evaluation conducted by the discharger have adequately addressed the identified toxicity problem.

4. The presence of chronic toxicity shall be estimated as specified in Short-Term Methods for Estimating the Chronic Toxicity of Effluents and Receiving Waters to Freshwater Organisms. Fourth Edition. EPA-821-R-02-013.

5. Results for both survival and reproduction endpoints shall be reported in TUc, where TUc = 100/NOEC or 100/ICp or ECp (p is the percent effluent). The no observed effect concentration (NOEC) is the highest concentration of toxicant to which organisms are exposed in a chronic test, that causes no observable adverse effect on the tests organisms (e.g., the highest concentration of toxicant to which the values for the observed responses are not statistically significant different from the controls). The inhibition concentration (IC) is a point estimate of the toxicant concentration that causes a given percent reduction in a non-quantal biological measurement (e.g., reproduction or growth) calculated from a continuous model (the EPA Interpolation Method). The effective concentration (EC) is a point estimate of the toxicant concentration that would cause a given percent reduction in quantal biological measurement (e.g., larval development, survival) calculated from a continuous model (e.g., probit).

6. Additional Testing Requirements

   a. A series of at least five dilutions and a control will be tested. The series shall be within 60% to 100% effluent concentration.

   b. If organisms are not cultured in-house, concurrent testing with reference toxicants shall be conducted. Where organisms are cultured in-house, monthly reference toxicant testing is sufficient. Reference toxicants shall also be conducted using the same test conditions as the effluent toxicity test (e.g., same test duration, etc).

   c. If either of the reference toxicant test or the effluent tests do not meet all test acceptability criteria as specified in the manual[11], then the discharger must re-sample and re-test within 14 days or as soon as the discharger receives notification of failed tests.

---

11 *Refers to USEPA Manual "Short-Term Methods for Estimating the Chronic Toxicity of Effluents and Receiving Waters to Freshwater Organisms. 4th Edition. October 2002, EPA-821-R-02-013."*

d. Control and dilution water should be receiving water or lab water, as appropriate, as described in the manual. If the dilution water used is different from the culture water, a second control, using culture water shall also be used.

7. Quality Assurance/Control:

   a. A quality assurance/quality control (QA/QC) program shall be instituted to verify the results of the effluent toxicity monitoring program. The QA/QC program shall include but shall not be limited to the following: (1) Selection of an independent testing laboratory; (2) Approval by the Regional Board's Executive Officer or Executive Officer's designee of the independent testing laboratory; (3) Once during the year, the discharger shall split samples with the independent laboratory for conducting chronic toxicity testing; (4) Results from the independent laboratory shall be submitted to the Regional Board and the discharger for evaluation; (5) The discharger shall review the test acceptability criteria in accordance with the EPA test protocols, EPA/600/4-91/002.

   b. Results from the independent laboratory of the annual QA/QC split samples are to be used for Quality Assurance/Quality Control (QA/QC) purposes only and not for purposes of determining compliance with other requirements of this Order.

8. The use of alternative methods for measuring chronic toxicity may be considered by the Executive Officer on a case–by-case basis. The use of a different test species, in lieu of conducting the required test species may be considered/approved by the Executive Officer on a case-by case basis upon submittal of the documentation supporting discharger's determination that a different species is more sensitive and appropriate.

9. Reporting: Results of all toxicity testing conducted within the month following the reporting period shall be submitted monthly in accordance with "Short-term Methods for Estimating the Chronic Toxicity of Effluents and Receiving Waters to Freshwater Organisms", third edition, Environmental Monitoring Systems Laboratory, U.S. Environmental Protection Agency 1994, Cincinnati, Ohio (July 1994, EPA/600/4-91/002). The report shall include a determination of the median value of all chronic toxicity testing results conducted during the two previous months.

10. Whenever an Initial Investigation Reduction Evaluation is conducted, the results of the evaluation shall be submitted upon completion. In addition, monthly status reports shall be submitted as part of the discharger's monitoring report for the previous month.

VI. LAND DISCHARGE MONITORING REQUIREMENTS

A. Effluent Monitoring Location for DP 002

1. The Discharger shall monitor treated effluent for Discharge Point 002 at Monitoring Location M-002 as follows.

Table 6. Secondary Effluent Monitoring Location at M-002

Constituent	Units	Type of Sample	Minimum Frequency of Sampling & Analysis	Required Analytical Test Method and ML
Flow	mgd	Recorder/ Totalizer	Continuous	See Sections I.A.2., I.A.3. above of this MRP
pH	pH units	Recorder/ Totalizer	Continuous	See Sections I.A.2., I.A.3. above of this MRP
BOD_5	mg/L	Composite	weekly	"
TOC	mg/L	Composite	weekly	"
Total Suspended Solids	mg/L	Composite	weekly	"
Total Dissolved Solids	mg/L	Composite	Monthly	"
Total Hardness	mg/L	Composite	Monthly	"
Total Inorganic Nitrogen	mg/L	Composite	Monthly	"
Antimony	µg/L	Composite	Quarterly	"
Cadmium	µg/L	Composite	Quarterly	" and ML 0.5 µg/l
Cobalt	µg/L	Composite	Quarterly	"
Copper	µg/L	Composite	Quarterly	See Sections I.A.2., I.A.3. above of this MRP and ML 5 µg/l
Chromium, VI	µg/L	Composite	Quarterly	" and ML 5 µg/l
Lead	µg/L	Composite	Quarterly	"and ML 2 µg/l
Mercury	µg/L	Composite	Quarterly	" and ML 0.2 µg/l
Selenium	µg/L	Composite	Quarterly	" and ML 2 µg/l
Silver	µg/L	Composite	Quarterly	"and ML 1 µg/l
Cyanide	µg/L	grab	Quarterly	"and ML 5 µg/l
Phenolic Compounds	µg/L	Composite	Quarterly	"
Priority Pollutants	µg/L	Composite and Grab when appropriate	Annually	"

VII. RECLAMATION MONITORING REQUIREMENTS

A. Monitoring Location REC-001 for DP-003

The Discharger shall monitor recycled wastewater at REC-001

Table 8. Reclamation Monitoring at REC-001

Parameter	Units	Sample Type	Minimum Sampling & Testing Frequency	Required Analytical Test Method
Flow	mgd	Recorder/Totalizer	Continuous	See Section I.A.3.
pH	Standard units	Recorder/Totalizer	Continuous	See Section I.A.3.
CT[12]	mg/L-min	Recorder	Continuous	See Section I.A.3., above, of this MRP
Turbidity	NTU	Recorder	Continuous	"
BOD_5	mg/L	Composite	Weekly	See Section I.A.3., above, of this MRP
Total Suspended Solids	mg/L	Composite	Weekly	See Section I.A.3., above, of this MRP
Coliform Organisms	MPN per 100 mL	Grab	Daily	"
Total Inorganic Nitrogen	mg/L	Composite	Monthly	See Section I.A.3., above, of this MRP
TDS	mg/L	Composite	Monthly	See Section I.A.3., above, of this MRP

B. Monitoring Users

Whenever recycled water is supplied to a user, the volume of recycled water, the user of recycled water, the locations of those sites including the names of the groundwater subbasins underlying the recycled water use sites, type of use (e.g. irrigation, industrial, etc) and the dates at which water is supplied shall be recorded on a permanent log. A summary report of water use by groundwater subbasins shall be submitted annually to Regional Water Board.

VIII. RECEIVING WATER MONITORING REQUIREMENTS – SURFACE WATER AND GROUNDWATER

A. Monitoring Location R-001U for Surface Water

1. The discharger shall make measurement of the receiving water flow at R-001U in the Temescal Creek as following:

12 *CT is the product of total chlorine residual and modal contact time measured at the same point.*

Table 11. Receiving Water Monitoring at R-001U

Parameter	Units	Sample Type	Minimum Sampling & Testing Frequency	Required Analytical Test Method
Dissolved Oxygen	mg/L	Grab	Weekly	See Sections I.A.2., I.A.3. above of this MRP
Temperature	^{0}C	"	Weekly	"
pH	pH unit	Grab	Weekly	"
Total Hardness	mg/L	Grab	Monthly	"
EPA Priority Pollutants	µg/L	"	Quarterly	"

B. Monitoring Location R-001D for Surface Water:

1. The Discharger shall monitor receiving water, Temescal Creek, at R-001D as follows:

Table 12. Receiving Water Monitoring at R-001D

Parameter	Units	Sample Type	Minimum Sampling & Testing Frequency	Required Analytical Test Method
Dissolved Oxygen	mg/L	Grab	Weekly	See Section I.A.3., above, of this MRP
Temperature	^{0}C	Grab	Weekly	See Section I.A.3., above, of this MRP
pH	pH unit	Grab	Weekly	"
Color change, foam, deposition of material, odor	--	Observe	Weekly	See Section I.A.3., above, of this MRP

C. Regional Monitoring for Fish Flesh Testing:

Unless otherwise directed by the Regional Water Board Executive Officer, the Discharger shall implement the approved plan for the annual sampling and testing of mercury levels in fish flesh samples collected from the Santa Ana River. The frequency of monitoring and submission of reports shall be as stipulated in the approved plan.

D. Groundwater Monitoring

As specified in Provision VI.C.2.d of the Order,., the Discharger shall develop, submit, and implement a hydrogeologic characterization study of the Lincoln/Cota percolation/evaporation ponds site to gather the needed information.

IX. OTHER MONITORING REQUIREMENTS

A. Biosolids Monitoring

1. Biosolids monitoring shall be conducted as follows:

Table 13. Biosolids Monitoring Requirements

Biosolids Monitoring	Units	Type of Sample	Minimum Frequency of Sampling & Testing
Priority Pollutants	mg/kg	Grab	Semi-annually
Moisture Content (% solid)	mg/kg	Grab	Quarterly

2. The discharger shall maintain a permanent log of solids hauled away from the treatment facilities for use/disposal elsewhere, including the date hauled, the volume or weight (in dry tons), type (screening, grit, raw sludge, biosolids), application (agricultural, composting, etc), and destination. This information shall be reported quarterly.

B. Stormwater Monitoring – Not Applicable

C. Water Supply Monitoring

1. In August of each year, a sample of each source of the water supplied to the sewered area shall be obtained and analyzed for total dissolved solids concentration expressed in "mg/l".

2. Monthly reports shall be submitted stating the amount (in percentage or acre-feet) supplied to the sewered area from each source of water and the resulting flow-weighted water supply quality for total dissolved solids.

D. Pretreatment Monitoring and Reporting

1. The discharger shall submit to the Regional Water Board and the EPA Region 9, a quarterly compliance status report. The quarterly compliance status reports shall cover the periods January 1 - March 31, April 1 - June 30, July 1 - September 30, and October 1 -December 31. Each report shall be submitted by the end of the month following the quarter, except that the report for October 1 - December 31 may be included in the annual report. This quarterly reporting requirement shall commence for the first full quarter following issuance of this Order. The reports shall identify:

   a. All significant industrial users (SIUs) which violated any standards or reporting requirements during that quarter;

b. The violations committed (distinguish between categorical and local limits);

c. The enforcement actions undertaken; and

d. The status of active enforcement actions from previous periods, including closeouts (facilities under previous enforcement actions which attained compliance during the quarter).

2. Annually, the discharger shall submit a report to the Regional Water Board, the State Water Resources Control Board and the EPA Region 9 describing the pretreatment activities within the service area during the previous year. In the event that any control authority within the service area is not in compliance with any conditions or requirements of this Order or their approved pretreatment program (such as due to industrial user discharges, interjurisdictional agency agreement implementation issues, or other causes,) then the discharger shall also include the reasons for non-compliance and state how and when the discharger and the control authority shall comply with such conditions and requirements. This annual report shall cover operations from July 1 through June 30 of each fiscal year and is due on September 1 of each year. The report shall contain, but not be limited to, the following information:

   a. A summary of analytical results from representative, flow-proportioned, 24-hour composite sampling of the POTW's influent and effluent wastewaters for those pollutants which are known or suspected to be discharged by industrial users (IUs) as identified by EPA under Section 307(a) of the CWA. The summary will include the result of annual full priority pollutant scan, with quarterly samples analyzed only for those pollutants[13] detected in the full scan. The discharger shall also provide any influent or effluent monitoring data for non-priority pollutants which the discharger believes may be causing or contributing to Interference, Pass Through or adversely impacting sludge quality. Sampling and analysis shall be performed in accordance with the techniques prescribed in 40 CFR 136 and amendments thereto.

   b. A discussion of any upset, interference, or pass-through incidents at the treatment plant (if any), which the discharger knows or suspects were caused by IUs of the POTW system. The discussion shall include the following:

      1) The reasons why the incidents occurred, the corrective actions taken, and, if known, the name and address of the IU(s) responsible.

      2) A review of the applicable pollutant limitations to determine whether any additional limitations, or changes to existing requirements, may be necessary to prevent pass through, interference or noncompliance with sludge disposal requirements.

---

13 *The Discharger is not required to analyze for asbestos.*

c. A complete and updated list of the discharger's significant industrial users (SIUs), including names, Standard Industrial Classification (SIC) code(s) and addresses, and a list of any SIU deletions and/or additions. The discharger shall provide a brief explanation for each deletion. The SIU list shall identify the SIUs subject to Federal Categorical Standards by specifying which set(s) of standards are applicable to each SIU. The list shall also indicate which SIUs are subject to local limitations more stringent than Federal Categorical Standards and those which are not subject to local limits.

d. A list or table characterizing the industrial compliance status of each SIU, including:

1) SIU name;
2) Industrial category;
3) The type (processes) of wastewater treatment in place;
4) Number of samples taken by the POTW during the year;
5) Number of samples taken by the SIU during the year;
6) Whether all needed certifications (if allowed) were provided by SIUs which have limits for total toxic organics;
7) Federal and Regional Standards violated during the year, reported separately;
8) Whether the SIU at any time in the year was in Significant Noncompliance (SNC)[14], as defined by 40 CFR 403.12 (f)(2)(vii); and
9) A summary of enforcement actions against the SIU taken during the year, including the type of action, final compliance date, and amount of fines assessed/collected (if any). Proposed actions, if known, should be included.
10) Number of inspections conducted at each SIU during the year.

e. A compliance summary table which includes:

1) SIU's which were in SNC at any time during the year;
2) The total number of SIUs which are in SNC with pretreatment compliance schedules during the year;
3) The total number of notices of violation and administrative orders issued against SIUs during the year;
4) The total number of civil and criminal judicial actions filed against SIUs during the year;
5) The number of SIUs which were published as being in SNC during the year; and
6) The number of IUs from which penalties were collected during the year.

f. A short description of any significant changes in operating the pretreatment program which differ from the previous year including, but not limited to changes concerning:

1) The program's administrative structure;
2) Local industrial discharge limitations;

---

14 *SNC is determined at the beginning of each quarter based on data of the previous six months.*

3) Monitoring program or monitoring frequencies;
4) Legal authority or enforcement policy;
5) Funding mechanisms; and
6) Resource requirements and/or staffing levels.

g. A summary of the annual pretreatment budget, including the cost of pretreatment program functions and equipment purchases.

h. A summary of public participation activities to involve and inform the public.

i. A description of any changes in sludge disposal methods and a discussion of any concerns not described elsewhere in the report.

3. The cumulative number of industrial users that the discharger has notified regarding Baseline Monitoring Reports and the cumulative number of industrial user responses.

4. The discharger shall submit the quarterly compliance status reports and the annual pretreatment report to EPA Region 9, the State Board and the Regional Water Board.

E. Salt Offset Program Monitoring and Reporting

Every month, the Discharger shall submit the total salt removal for the month that demonstrates that 1) the offset is occurring, and 2) the amount of removed TDS is in compliance with offset requirement. The Discharger shall report monthly a running balance of salt discharges compared to salt removal. If offset is not occurring during the monthly monitoring period, the monthly report shall so state and identify when the offset will be achieved.

X. REPORTING REQUIREMENTS

A. General Monitoring and Reporting Requirements

1. The Discharger shall comply with all Standard Provisions (Attachment D) related to monitoring, reporting, and recordkeeping.

2. All analytical data shall be reported with method detection limit[15] (MDLs) and with identification of either reporting level or limits of quantitation (LOQs).

3. Any internal quality control data associated with the sample must be reported when requested by the Executive Officer. The Regional Water Board will reject the quantified laboratory data if quality control data is unavailable or unacceptable.

---

15 *The standardized test procedure to be used to determine the method detection limit (MDL) is given at Appendix B, 'Definition and Procedure for the Determination of the Method Detection Limit' of 40 CFR 136.*

4. Discharge monitoring data shall be submitted in a format acceptable by the Regional Water Board. Specific reporting format may include preprinted forms and/or electronic media. The results of all monitoring required by this Order shall be reported to the Regional Water Board, and shall be submitted in such a format as to allow direct comparison with the limitations and requirements of this order.

5. The Discharger shall tabulate the monitoring data to clearly illustrate compliance and/or noncompliance with the requirements of the Order.

6. The Discharger shall submit to the Regional Water Board reports necessary to determine compliance with effluent limitations in this Order and shall follow the chemical nomenclature and sequential order of priority pollutant constituents shown in Attachment "G" – Priority Pollutant Lists. The Discharger shall report with each sample result:

   a. The reporting level achieved by the testing laboratory; and
   b. The laboratory's current MDL, as determined by the procedure found in 40 CFR 136 (revised as of May 14, 1999).
   c. For receiving water monitoring and for those priority pollutants without effluent limitations, the Discharger shall require its testing laboratory to quantify constituent concentrations to the lowest achievable MDL as determined by the procedure found in 40 CFR 136 (revised as of May 14, 1999). In situations where the most stringent applicable receiving water objective (freshwater or human health (consumption of organisms only), as specified for that pollutant in 40 CFR 131.38[16] is below the minimum level value specified in Attachment "I" and the Discharger cannot achieve an MDL value for that pollutant below or equal to the ML value, the Discharger shall submit justification why a lower MDL value cannot be achieved. Justification shall be submitted together with monthly monitoring reports.

7. For every item of monitoring data where the requirements are not met, the monitoring report shall include a statement discussing the reasons for noncompliance, and of the actions undertaken or proposed which will bring the discharge into full compliance with requirements at the earliest time, and an estimate of the date when the Discharger will be in compliance. The Discharger shall notify the Regional Water Board by letter when compliance with the time schedule has been achieved.

8. The reports for June and December shall include a roster of plant personnel, including job titles, duties, and level of State certification for each individual.

9. The State or Regional Water Board may notify the Discharger to discontinue submittal of hard copies of reports. When such notification is given, the Discharger shall stop submitting hard copies of required monitoring reports.

---

16 *See Federal Register/ Vol. 65, No. 97 / Thursday, May 18, 2000 / Rules and Regulations.*

10. The Discharger shall report monitoring results for specific parameters in accordance with the following table:

Table 14. Reporting Requirements

Parameter	Measurement
Flow	Daily total flow
pH	Daily High and daily low
Total Residual Chlorine	Daily Maximum
Electrical Conductivity	Daily High
Turbidity	Daily maximum

11. The Discharger shall file a written report with the Regional Board within ninety (90) days after the average dry-weather waste flow for any month equals or exceeds 75 percent of the design capacity of the waste treatment and/or disposal facilities. The Discharger's senior administrative officer shall sign a letter which transmits that report and certifies that the policy making body is adequately informed about it. The report shall include:

    a. Average daily flow for the month, the date on which the instantaneous peak flow occurred, the rate of that peak flow, and the total flow for the day.

    b. The Discharger's best estimate of when the average daily dry-weather flow rate will equal or exceed the design capacity of the treatment facilities.

    c. The Discharger's intended schedule for studies, design, and other steps needed to provide additional capacity for the waste treatment and/or disposal facilities before the waste flow rate equals the capacity of present units.

B. Self Monitoring Reports (SMRs)

1. At any time during the term of this permit, the State or Regional Water Board may notify the Discharger to electronically submit Self-Monitoring Reports (SMRs) using the State Water Board's California Integrated Water Quality System (CIWQS) Program Web site (http://www.waterboards.ca.gov/ciwqs/index.html). Until such notification is given, the Discharger shall submit hard copy SMRsin accordance with the requirements described in subsection B.5 below. The CIWQS Web site will provide additional directions for SMR submittal in the event there will be service interruption for electronic submittal.

2. The Discharger shall report in the SMR the results for all monitoring specified in this MRP under sections III through IX. Additionally, the Discharger shall report in the SMR the results of any special studies, acute and chronic toxicity testing, TRE/TIE, PMP, and Pollution Prevention Plan required by Special Provisions – VI.C. of this Order. The Discharger shall submit monthly, quarterly, and annual SMRs including the results of all required monitoring using USEPA-approved test methods or other test methods specified in this Order. If the Discharger monitors any pollutant more frequently than required by this Order, the results of this monitoring shall be included in the calculations and reporting of the data submitted in the SMR.

3. Monitoring periods and reporting for all required monitoring shall be completed according to the following schedule:

Table 15. Monitoring and Reporting Schedule

Sampling Frequency	Monitoring Period Begins On	Monitoring Period	SMR Due Date
Continuous	The effective day of this Order	All	Submit with monthly SMR
Daily	The effective day of this Order	(Midnight through 11:59 PM) or any 24-hour period that reasonably represents a calendar day for purposes of sampling.	Submit with monthly SMR
Weekly	The effective day of this Order	Sunday through Saturday	Submit with monthly SMR
Monthly	The effective day of this Order	1st day of calendar month through last day of calendar month	first day of the second month following the reporting period, submit as monthly SMR
Quarterly	The effective day of this Order	January 1 through March 31, samples are colleted in January; April 1 through June 30; samples are colleted in April; July 1 through September 30; samples are colleted in July; October 1 through December 31; samples are colleted in October	first day of the second month following the reporting period, submit with monthly SMR
Semiannually	The effective day of this Order	January 1 through June 30 July 1 through December 31	first day of the second month following the reporting period, submit with monthly SMR
Annually	The effective day of this Order	January 1 through December 31	April 1 each year including report requirements in Attachments

4. Reporting Protocols. The Discharger shall report with each sample result the applicable Reporting Level (RL) and the current Method Detection Limit (MDL), as determined by the procedure in 40 CFR Part 136.

   The Discharger shall report the results of analytical determinations for the presence of chemical constituents in a sample using the following reporting protocols:

   a. Sample results greater than or equal to the RL shall be reported as measured by the laboratory (i.e., the measured chemical concentration in the sample).

   b. Sample results less than the RL, but greater than or equal to the laboratory's MDL, shall be reported as "Detected, but Not Quantified," or DNQ. The *estimated chemical concentration of the sample shall also be reported.

      For the purposes of data collection, the laboratory shall write the estimated chemical concentration next to DNQ as well as the words "Estimated Concentration" (may be shortened to "Est. Conc."). The laboratory may, if such information is available, include numerical estimates of the data quality for the reported result. Numerical estimates of data quality may be percent accuracy (± a percentage of the reported value), numerical ranges (low to high), or any other means considered appropriate by the laboratory.

c. Sample results less than the laboratory's MDL shall be reported as "Not Detected," or ND.

d. Dischargers are to instruct laboratories to establish calibration standards so that the ML value (or its equivalent if there is differential treatment of samples relative to calibration standards) is the lowest calibration standard. At no time is the Discharger to use analytical data derived from *extrapolation* beyond the lowest point of the calibration curve.

5. Multiple Sample Data. When determining compliance with an AMEL for priority pollutants and more than one sample result is available in a month, the Discharger shall compute the arithmetic mean unless the data set contains one or more reported determinations of "Detected, but Not Quantified" (DNQ) or "Not Detected" (ND). In those cases, the Discharger shall compute the median in place of the arithmetic mean in accordance with the following procedure:

   a. The data set shall be ranked from low to high, ranking the reported ND determinations lowest, DNQ determinations next, followed by quantified values (if any). The order of the individual ND or DNQ determinations is unimportant.

   b. The median value of the data set shall be determined. If the data set has an odd number of data points, then the median is the middle value. If the data set has an even number of data points, then the median is the average of the two values around the middle unless one or both of the points are ND or DNQ, in which case the median value shall be the lower of the two data points where DNQ is lower than a value and ND is lower than DNQ.

6. The Discharger shall submit hard copy SMRs (with an original signature) when required by subsection B.1 above in accordance with the following requirements:

   a. The Discharger shall arrange all reported data in a tabular format. The data shall be summarized to clearly illustrate whether the facility is operating in compliance with interim and/or final effluent limitations.

   b. The Discharger shall attach a cover letter to the SMR. The information contained in the cover letter shall clearly identify violations of the WDRs; discuss corrective actions taken or planned; and the proposed time schedule for corrective actions. Identified violations must include a description of the requirement that was violated and a description of the violation.

   c. SMRs must be submitted to the Regional Water Board, signed and certified as required by the Standard Provisions (Attachment D), to the address listed below:

      California Regional Water Quality Control Board
      Santa Ana Region
      3737 Main Street, Suite 500
      Riverside, CA 92501-3348

8. By April 1 of each year, the Discharger shall submit an annual report to the Regional Water Board. The annual report shall include the following:

   a. Tabular and graphical summaries of the monitoring data obtained during the previous year;

   b. A discussion of the compliance record and the corrective actions taken or planned, which may be needed to bring the discharge into full compliance with the waste discharge requirements;

   c. A summary of the quality assurance (QA) activities for the previous year; and

   d. For priority pollutant constituents that do not have effluent limitations but are required to be monitored, the Discharger shall evaluate the monitoring data obtained during the previous year and determine whether detected constituents are at levels that would warrant reopening the permit to include effluent limitations for such constituent(s). To conduct this evaluation, the concentration of detected constituents shall be compared to the most stringent applicable receiving water objectives (freshwater or human health (consumption of organisms only) as specified for that pollutant in 40 CFR 131.38[17]). The Discharger shall include a discussion of the corrective actions taken or planned to address values above receiving water objectives.

C. Discharge Monitoring Reports (DMRs)

1. As described in Section X.B.1 above, at any time during the term of this permit, the State or Regional Water Board may notify the Discharger to electronically submit SMRs that will satisfy federal requirements for submittal of Discharge Monitoring Reports (DMRs). Until such notification is given, the Discharger shall submit DMRs in accordance with the requirements described below.

2. DMRs must be signed and certified as required by the standard provisions (Attachment D). The Discharge shall submit the original DMR and one copy of the DMR to the address listed below:

Standard Mail	FedEx/UPS/ Other Private Carriers
State Water Resources Control Board Division of Water Quality c/o DMR Processing Center PO Box 100 Sacramento, CA 95812-1000	State Water Resources Control Board Division of Water Quality c/o DMR Processing Center 1001 I Street, 15th Floor Sacramento, CA 95814

17 *See Federal Register/ Vol. 65, No. 97 / Thursday, May 18, 2000 / Rules and Regulations.*

3. All discharge monitoring results must be reported on the official USEPA pre-printed DMR forms (EPA Form 3320-1). Forms that are self-generated or modified cannot be accepted.

   Regional Administrator
   U. S. Environmental Protection Agency
   Region 9 – Attention WTR – 7
   75 Hawthorne Street
   San Francisco, CA 94105

D. Other Reports – Not Applicable

ATTACHMENT F – FACT SHEET – TABLE OF CONTENTS

Attachment F – Fact Sheet F-3
I. Permit Information F-3
II. Facility Description F-4
A. Description of Wastewater and Biosolids Treatment or Controls F-4
B. Discharge Points and Receiving Waters F-8
C. Summary of Existing Requirements and SMR Data F-9
D. Compliance Summary F-14
E. Planned Changes F-16
III. Applicable Plans, Policies, and Regulations F-16
A. Legal Authorities F-16
B. California Environmental Quality Act (CEQA) F-16
C. State and Federal Regulations, Policies, and Plans F-17
D. Impaired Water Bodies on CWA 303(d) List-Not Applicable F-19
E. Other Plans, Polices and Regulations-Not Applicable F-19
IV. Rationale For Effluent Limitations and Discharge Specifications F-20
A. Discharge Prohibitions F-20
B. Technology-Based Effluent Limitations F-20
1. Scope and Authority F-20
2. Applicable Technology-Based Effluent Limitations F-21
C. Water Quality-Based Effluent Limitations (WQBELs) F-21
1. Scope and Authority F-21
2. Applicable Beneficial Uses and Water Quality Criteria and Objectives F-22
3. Determining the Need for WQBELs F-24
4. WQBEL Calculations F-25
5. Whole Effluent Toxicity (WET) F-27
D. Best Professional Judgment-Based Effluent Limitations F-27
E. Final Effluent Limitations at DP 001 ..... F-27
1. Satisfaction of Anti-Backsliding Requirements F-27
2. Satisfaction of Antidegradation Policy F-27
3. Stringency of Requirements for Individual Pollutants F-27
F. Interim Effluent Limitations – DP 001 ..... F-28
G. Land Discharge Specifications – DP 002 ..... F-29
H. Reclamation Specifications - DP 003 ..... F-30
V. Rationale for Receiving Water Limitations F-31
A. Surface Water F-31
B. Groundwater F-31
VI. Rationale for Monitoring and Reporting Requirements F-32
A. Influent Monitoring F-32
B. Effluent Monitoring F-32
C. Whole Effluent Toxicity Testing Requirements F-32
D. Receiving Water Monitoring F-33
1. Surface Water F-33
2. Temescal Management Zone – Not Applicable F-33
E. Other Monitoring Requirements F-33

VII. Rationale for Provisions F-34
A. Standard Provisions F-34
B. Special Provisions F-34
VIII. Public Participation F-36
A. Notification of Interested Parties F-36
B. Written Comments F-37
C. Public Hearing F-37
D. Waste Discharge Requirements Petitions F-38
E. Information and Copying F-38
F. Register of Interested Persons F-38
G. Additional Information F-38

ATTACHMENT F – FACT SHEET

As described in Section II of this Order, this Fact Sheet includes the legal requirements and technical rationale that serve as the basis for the requirements of this Order.

This Order has been prepared under a standardized format to accommodate a broad range of discharge requirements for Dischargers in California. Only those sections or subsections of this Order that are specifically identified as "not applicable" have been determined not to apply to this Discharger. Sections or subsections of this Order not specifically identified as "not applicable" are fully applicable to this Discharger.

I. PERMIT INFORMATION

The following table summarizes administrative information related to the Facility.

Table 1. Facility Information

WDID	**8 330108001**
Discharger	**City of Corona, Department of Water & Power**
Name of Facility	**Wastewater Treatment Plant No. 1**
Facility Address	**2205 Railroad Street, Corona, CA 92880**
Facility Contact, Title and Phone	**Rudy Fandel, Regulatory Compliance Manager; (951) 736-2476 rudy.fandel@ci.corona.ca.us**
Authorized Person to Sign and Submit Reports	**Jonathan Daly, General Manager Rudy Fandel, Regulatory Compliance Officer; (951) 736-2476**
Mailing Address	**400 South Vicentia Avenue, Corona, CA 92882**
Billing Address	**Same**
Type of Facility	**POTW**
Major or Minor Facility	**Major**
Threat to Water Quality	**1**
Complexity	**A**
Pretreatment Program	**Y**
Reclamation Requirements	**Producer/User**
Facility Permitted Flow	**11.5 mgd secondary treatment, or 9 mgd of tertiary treatment**
Facility Design Flow	**11.5 mgd secondary treatment, or 9 mgd of tertiary treatment**
Watershed	**Santa Ana River Watershed**
Receiving Water	**Butterfield Drain, Prado Basin Management Zone, Reach 3 of Santa Ana River; Temescal Management Zone**
Receiving Water Type	**Freshwater – creek, river; Groundwater**

A. The City of Corona, Department of Water & Power (hereinafter Discharger) is the owner and operator of the Wastewater Treatment Plant No. 1 (hereinafter Facility), a publicly owned wastewater treatment plant with tertiary treatment processes.

For the purposes of this Order, references to the "discharger" or "permittee" in applicable federal and State laws, regulations, plans, or policy are held to be equivalent to references to the Discharger herein.

B. The Facility discharges treated wastewater to Butterfield drain at discharge point (DP) 001, which is within the Prado Basin Management Zone (PBMZ). All surface waters within the PBMZ ultimately flow into to Reach 3 of the Santa Ana River and all are waters of the United States. Secondary treated wastewater is discharged at DP 002 to nearby percolation ponds located within or adjacent to the PBMZ and an unlined part of Temescal Creek. Recycled water is delivered through DP 003 for irrigation within the PBMZ and Temescal Management Zone. The discharges are currently regulated by Order No. 01-55, which was adopted on December 19, 2001 and expired on December 1, 2006. Order 01-55 was amended by Order No. R8-2006-0064 on October 13, 2006, to include effluent limitations for total residual chlorine discharges to outfall No. 001 and requirements for the use of a chlorine disinfection system in accordance with the California Department of Health Services (CDHS) Title 22. The terms and conditions of the current Order have been automatically continued and remain in effect until new Waste Discharge Requirements and NPDES permit are adopted pursuant to this Order.

C. The Discharger filed a report of waste discharge and submitted an application for renewal of its Waste Discharge Requirements (WDRs) and National Pollutant Discharge Elimination System (NPDES) permit on May 19, 2006. Supplemental Information was requested and received since August 10, 2006, and the latest supplemental information was received on December 4, 2006. A site visit was conducted on October 17, 2006 to observe operations and collect additional data to develop permit limitations and conditions.

II. FACILITY DESCRIPTION

A. Description of Wastewater and Biosolids Treatment or Controls

1. Service Area

Plant No. 1 treats wastewater flows from the western part of Corona, which is approximately 12,461 acres. The sewer area tributary to Plant No. 1 consists of low to high density residential, commercial, office professional and general and light industries. Annual average wastewater flow to the Facility is 9 mgd and the maximum daily flow is 10.4 mgd. This Facility services a total population of about 84,200.

The Discharger also operates two separate wastewater treatment plants, Plants No. 2 and 3. If necessary, flows from the City's Wastewater Treatment Plant No. 2 can be diverted to Plant No. 1. Currently, Plant No. 1 receives sludge by way of force mains from Plant No. 2, which also receives sludge from Plant No. 3, for solids processing and disposal.

Future sewer service areas that are tributary to Plant No. 1 are illustrated in the 2005 Sewer Master Plan. All wastewater would be conveyed by gravity system to Plant No. 1.

2. Wastewater Design Characteristics and Treatment Capacity

This Facility is located at 2205 Railroad Street, Corona. The current design treatment capacity of this Facility is 11.5 mgd of secondary treatment, or 9.0 mgd of tertiary treatment with Chlorine Contact Tank (CCT)[1] disinfection.

The treatment system includes the headworks, Plant 1A, Plant 1B, and a flow splitter separating 5.5 mgd to Plant 1A and 6 mgd to Plant 1B. The headworks consist of two channel grinders and a grit removal system and are designed for 14.5 mgd treatment capacity.

Plant 1A is designed to treat up to 5.5 mgd and consist of two rectangular primary sedimentation units; an activated sludge process with nutrient removal capabilities operated as sequential plug-flow step-feed mode (3 aerations basins), and secondary clarification provided by 6 rectangular units. Both the primary and secondary clarifier units are equipped for sludge recovery and conveyance to onsite biosolids handling facilities.

Secondary treated wastewater from Plant 1A can be pumped directly to three percolation ponds located one mile east of the plant. One pond is located along Lincoln Avenue ("Lincoln pond") and two ponds are located at the end of Rincon Street near Cota Street ("Cota ponds"). An annual average volume of 4.4 mgd secondary treated wastewater is percolated. The remaining secondary treated wastewater is diverted to an equalization basin in Plant 1B where it mixes with the secondary treated effluent from Plant 1B.

Plant 1B is designed with a secondary treatment capacity of 6.0 mgd and tertiary treatment capacity of 9 mgd. Secondary treatment consists of two parallel oxidation ditches with separate oxic and anoxic zones; two circular secondary clarifier units with sludge recovery; and an equalization basin. The tertiary treatment train consists of coagulation, continuous backwash sand filtration, and ultraviolet light (UV) disinfection.

The Discharger has requested to re-rate the secondary and tertiary treatment capacities from their original designed capacities, 11.5 mgd and 9 mgd respectively, to higher capacities. Based on Board staff evaluation of the Dischargers request, the Discharger will have to provide the Regional Water Board with a suitable secondary and/or tertiary treatment re-rating testing plan, implement the plan, and submit a rerating report for review. Under the oversight of Regional Water Board and California Department of Health Services (CDHS) staffs, this Order authorizes the Discharger to stress-test its secondary and/or tertiary treatment systems to determine the actual treatment capacity of the facilities and to allow the Discharger to generate pertinent field data needed to justify the re-rating of the tertiary and/or secondary treatment systems. Absent this justification, the plant tertiary treatment capacity remains at 9.0 mgd as permitted in Order No. 01-55. This Order may be

---

1 *Chlorine Contact Basin can produce up to 15.76 MGD of disinfected tertiary effluent in accordance with Title 22 of California Code of Regulations.*

reopened to reflect a higher secondary and/or tertiary treatment capacity based on the re-rating study.

On August 8, 2006, the Discharger amended its Application/Report of Waste Discharge and notified Regional Board staff that the construction of a new chlorine contact Tank (CCT) that would be used as the new disinfection facility was completed and would start operation in mid–September 2006. This new chlorine disinfection system would eventually replace the current UV system. A portion of the chlorine-disinfected wastewater would be discharged to PBMZ and the remainder would be delivered to recycled water customers. The Discharger has successfully completed the trace study testing of the new chlorine contact tank, and the use of the chlorine contact tank has been approved by the CDHS. The Discharger has stated that they do not intend to use the UV system as part of the recycled water treatment train, and therefore the UV system will no longer be approved for use as part of the recycled water treatment train.

This Order includes the same requirements for total chlorine discharge and operation as specified in Order No. 01-55 as amended by Order No. R8-2006-0064.

3. Sludge Treatment Capacity

   Sludge treatment is provided as follows. From Plant 1A, waste activated sludge goes to gravity belt thickener, three anaerobic digesters, and two dewatering belt presses. From the Plant 1B final clarifiers, return activated sludge (RAS) is returned to the oxidation ditches and waste activated sludge (WAS) is pumped to the two belt presses. All belt press filtrate is reintroduced to the oxidation ditches and sludge cake is transported to an approved composting facility. Plant No. 1 also receives sludge from Corona Municipal Treatment Plant No. 2.

4. Recycled water Reservoir.
   An on-site four million gallon recycled water reservoir has been completed and approved for use by the CDHS. Disinfected wastewater is stored and either pumped to recycled water users, or pumped back into the plant for utility use.

5. Santa Ana River Interceptor (SARI) line

   The City of Corona is a participating agency to the SARI line[2]. The City has a raw sewage treatment and disposal right in the SARI line of 1.55 mgd from Plant 1A. This disposal right allows the Discharger to divert to the SARI line a portion of the total influent into the treatment plant that is above the plant's current design capacity. Use of the SARI line will be on an as-needed basis.

---

2 *The SARI line conveys wastes to the Orange County Sanitation District's facilities for treatment and ocean disposal.*

6. On-site Storm Water Runoff

   Stormwater runoff generated at the Facility is contained within the plant property. There is a storm water catch basin on the southeastern corner of the Facility. All stormwater is accumulated in the catch basin and allowed to evaporate.

7. Salt Offset Program

   In 2001, the Discharger installed a 10 mgd desalter facility in the Temescal Management Zone (MZ) to offset TDS discharges to the PBMZ, previously designated as Temescal Creek, Reach 1A. This desalter plant was expanded to 15 mgd in January 2004 to comply with Provision I.8. of Order No. 01-55. When the desalter was first expanded, it was operated at the committed full capacity of 15 mgd. The desalter product water is delivered to the City of Corona's service areas. However, with the loss of one of the City's water supply wells that feed the desalter, water production decreased to 10 mgd. Currently, the City is waiting for funding to construct one, possible two new wells that would feed the desalter and allow it to operate at the full capacity of 15 mgd.

8 Water Recycling Uses:

   The Discharger currently conveys recycled water to Butterfield Park and Clearwater Sports Field where it is used for turf irrigation. Recycled water is also pumped to Yeager construction's reservoir for use in the Prado Raising Projects for dust control and cement making. An annual average volume of 0.08 mgd of tertiary treated recycled water is used at the park.

   In addition to Butterfield Park, Clearwater Sports Field and Yeager, the following sites now use recycled water from Plant No. 1: Mountain Gate Park, Citrus Park, Cresta Verde Golf Course, Ridgeline Park. The following landscape maintenance districts (LMDs) additionally use recycled water from Plant No. 1: Serfas Club – Zone 1, Fieldstone LMD, Z10/Ridgeline Zone 1-4 and 6, Z10/Canyon Crest – Zone 1 and 5, Zone 15, Z10/Green River – Zone 3,7, and 9.

   The average daily irrigation and dust control water usage with the addition of the new recycle water users is approximately 2.88-MGD. Yeager construction uses on average 0.09-MGD for dust control. However, more sites and LMDs in the City are in the process of being converted to recycle water and this average usage is expected to increase with time.

B. Discharge Points and Receiving Waters

1. Discharge points:

Table 2. Summary of Discharge Points

Discharge Serial No.	Latitude (N)	Longitude (W)	Description and Receiving Waters	Flow & Frequency
001	33° 53'43.94"	117°36'34.95"	Direct discharge of tertiary treated effluent through a subterranean pipe to the unlined Butterfield Drain within the PBMZ, tributary to the Santa Ana River, Reach 3	Average 4.4 MGD, continuous
002	33°53'33.68"	117°34'35.80"	Secondary treated effluent wastewater from Plant 1A or equalization pond is pumped one mile east to a cluster of three large percolation ponds. Temescal MZ is the receiving water.	5.5 MGD, continuous
003	33°53'34.58"	117°36'33.62"	Tertiary treated recycled water that is pumped from the Reservoir at the Plant and is distributed to customers all over the City. Prado Basin Management Zone and Temescal MZ are the receiving waters.	Average 63.8 MG per year, during dry days/months only (usage expected to increase dramatically w/ most parks & Landscape Maintenance District (LMD) now retrofitted for recycled water irrigation use in the City)

2. Receiving Waters:

Surface Waters. Tertiary treated wastewater from the Facility is normally discharged to the PBMZ. Surface water flows within the PBMZ enter Reach 3 of the Santa Ana River.

Groundwater. The Discharger plans to distribute recycled water throughout the City of Corona. The recycled water use area includes the PBMZ and areas overlying the Temescal Management zone.

The Discharger also discharges secondary treated wastewater to Lincoln/Cota ponds. These percolation ponds are within or adjacent to the PBMZ but are protected by berms that are higher than the 566-foot MSL[3] elevation of the Prado floodplain[4]. Thus, discharges to the ponds are not at present considered direct discharges to the PBMZ

---

3 *MSL is defined as mean sea level*

4 *"Risk Sciences": Final Description of Prado Basin Management Zone, revised 9/24/2002.*

for regulatory purposes. However, these ponds are defined as recharge ponds. These ponds are located adjacent to an unlined reach of Temescal Creek.

There is little or no groundwater storage within the PBMZ.

Attachment B provides a map of the area around the Facility.
Attachment C provides flow schematic for this Facility.

C. Summary of Existing Requirements and SMR Data

Effluent limitations/Discharge Specifications contained in the existing Order No. 01-55 for discharges from DP 001 and DP 002 and representative monitoring data from the term of the previous Order are as follows:

Table 3. Historic Effluent Limitations and Monitoring Data at DP 001

Parameter (units)	Effluent Limitation [1]			Monitoring Data (From 2003 – To 2006[2])			
	Average Monthly	Average Weekly	Max Daily	Highest Average Monthly Discharge	Highest Average Weekly Discharge	Highest Daily Discharge	Highest 12-Month Average
pH Daily Average Continuous Recorder (SU)			6.5 – 8.5	7.76		8.00	
Total Chlorine Residual (mg/L)			0.1				
BOD_5 (mg/L)	20	30		4.37	6.3	12	
Suspended Solids (mg/L)	20	30		4.90	6.4	20	
Coliform Organisms (MPN/100 mL)	23 (No more than 1 per month)		240	52.19		1600	
	2.2 (7-day median)				13		
Ammonia-Nitrogen (mg/L)	4.5			5.74		12	
TDS (mg/L)	700[5] (12-Month Avg)					860	765
Total Hardness (mg/L)	350 (12-Month Avg)					346	301
TIN (mg/L)	10 (12 month average)			9.97		26	5.1
Cadmium (µg/l)						0.06	

5 *Recognizing that compliance with stringent numeric TDS limits might not be reasonably feasible, the prior Order stipulated that the numeric TDS limitations would not apply provided that the Discharger implemented an acceptable offset. The Discharger was unable to comply with the numeric TDS limitations and implemented in an acceptable offset, namely, participation in the N/TDS Task Force's review of the N and TDS-related components of the Basin Plan including operation of the City's 15 MGD Desalter facility and use of desalter product water within the City's services areas. . Therefore, no violations of the TDS limits in the prior Order occurred (see D. Compliance Summary).*

Table 3. Historic Effluent Limitations and Monitoring Data at DP 001

Parameter (units)	Effluent Limitation [1]			Monitoring Data (From 2003 – To 2006[2])			
	Average Monthly	Average Weekly	Max Daily	Highest Average Monthly Discharge	Highest Average Weekly Discharge	Highest Daily Discharge	Highest 12-Month Average
Chromium (µg/l)						13.6	
Copper (µg/l)						45	
Lead (µg/l)						43.8	
Mercury (µg/l)						0.5	
Nickel (µg/l)						16.3	
Selenium (µg/l)						20	
Silver (µg/l)						9.67	
Zinc (µg/l)						1554	
Hexachlorocyclohexane -gamma (µg/l)						0	
Bis (2-Ethylhexyl) Phthalate (µg/l)						6.6	
Endusulfan I (µg/l)						0	
4,4'-DDT (µg/l)						0.13	
Tetrachloroethylene (PCE) (µg/l)						0	
2,3,7,8-TCDD(µg/l)						5.1	
Hardness (receiving water: Temescal Creek)				268	268	290	268
Flow (MGD)			9	6.96		10.01	
Conductivity (umhos/cm)				1431		2050	
Turbidity (NTU)			2	1.72		8.52	
TOC (mg/l)				8.07		11	
Nitrate (mg/l)				8.79		26	
Nitrite (mg/l)				1.44		5	
Bicarbonate (mg/l)						330	
Boron (mg/l)						0.79	
Calcium (mg/l)						110	
Carbonate (mg/l)						0	
Chloride (mg/l)	140 (12-Month Avg)					180	165
Fluoride (mg/l)						0.61	
Magnesium (mg/l)						31	
Sodium (mg/l)	110 (12-Month Avg)					180	147
Sulfate (mg/l)	150 (12-Month Avg)					300	220
Iron (µg/l)						1090	
Manganese (µg/l)						70.8	
Cyanide (mg/l)						0	
Bromoform (µg/l)						0	
Chloroform (µg/l)						0.4	
Dibromochloromethane (µg/l)						0	

Table 3. Historic Effluent Limitations and Monitoring Data at DP 001

Parameter (units)	Effluent Limitation [1]			Monitoring Data (From 2003 – To 2006[2])			
	Average Monthly	Average Weekly	Max Daily	Highest Average Monthly Discharge	Highest Average Weekly Discharge	Highest Daily Discharge	Highest 12-Month Average
Bromodichloromethane (µg/l)						0	
Arsenic (µg/l)						22	
Barium (µg/l)						54	
Cobalt (µg/l)						6	
Acrylonitrile (µg/l)						0	
Benzene (µg/l)						0	
Carbon Tetrachloride (µg/l)						0	
1,1-Dichloroethylene (µg/l)						0	
Pentachlorophenol (µg/l)						0	
Phenol (µg/l)						0.36	
2,4,6-Trichlorophenol (µg/l)						0	
Benzidine (µg/l)						1.3	
Benzo (a) anthracene (µg/l)						0	
Benzo (a) pyrene (µg/l)						0	
Benzo (b) fluoranthene (µg/l)						0	
Benzo (k) fluorantene (µg/l)						0	
Bis (2-Chloroethyl) Ether (µg/l)						0.095	
Chrysene (µg/l)						0	
Dibenzo(a,h)Anthracene (µg/l)						0.19	
3,3-Dichlorobenzidine (µg/l)						0	
2,4-Dinitrotoluene (µg/l)						0	
1,2-Diphenylhydrazine (µg/l)						0	
Hexachlorobenzene (µg/l)						0	
Hexachloroethane (µg/l)						0	
Indeno(1,2,3-cd)Pyrene (µg/l)						0	
NDMA (µg/l)						7.8	
N-Nitrosodi-n-propylamine (µg/l)						0.3	
Aldrin (µg/l)						0	
Alpha BHC (µg/l)						0	
Beta BHC (µg/l)						0	
Chlordane (µg/l)						0	

Table 3. Historic Effluent Limitations and Monitoring Data at DP 001

Parameter (units)	Effluent Limitation [1]			Monitoring Data (From 2003 – To 2006[2])			
	Average Monthly	Average Weekly	Max Daily	Highest Average Monthly Discharge	Highest Average Weekly Discharge	Highest Daily Discharge	Highest 12-Month Average
4,4'-DDE (µg/l)						0	
4,4'_DDD (µg/l)						0	
Deildrin (µg/l)						0	
Endrin (µg/l)						0	
Heptachlor (µg/l)						0	
Heptachlor Epoxide (µg/l)						0	
PCB 1016 (µg/l)						0	
PCB 1221 (µg/l)						0	
PCB 1232 (µg/l)						0	
PCB 1242 (µg/l)						0	
PCB 1248 (µg/l)						0	
PCB 1254 (µg/l)						0	
PCB 1260 (µg/l)						0	
Toxaphene (µg/l)						0	
2,3,7,8-TETRACDD (pg/l)						0	
1,2,3,4,7,8-HEXACDD (pg/l)						1.52	
1,2,3,6,7,8-HEXACDD (pg/l)						1.52	
1,2,3,7,8,9-HEXACDD (pg/l)						1.66	
1,2,3,4,6,7,8-HEPTACDD (pg/l)						120	
OCTACDD (pg/l)						860	
2,3,7,8-TETRACDF (pg/l)						0	
1,2,3,7,8-PENTACDF (pg/l)						1.21	
2,3,4,7,8-PENTACDF (pg/l)						1.89	
1,2,3,4,7,8-HEXACDF (pg/l)						1.53	
1,2,3,6,7,8-HEXACDF (pg/l)						1.37	
1,2,3,7,8,9-HEXACDF (pg/l)						1.26	
2,3,4,6,7,8-HEXACDF (pg/l)						1.38	
1,2,3,4,6,7,8-HEPTACDF (pg/l)						0	
1,2,3,4,7,8,9-HEPTACDF (pg/l)						1.52	
OCTACDF (pg/l)						6.1	

[1] Effluent limitations set forth by Order No. 01-55.
[2] Data is from January 1, 2003 to September 30, 2006.

Table 4. Historic Effluent Limitations and Monitoring Data at DP 002

Parameter (units)	Effluent Limitation [1]			Monitoring Data (From 2003 – To 2006[2])			
	Average Monthly	Average Weekly	Maximum Daily	Highest Average Monthly Discharge	Highest Average Weekly Discharge	Highest Daily Discharge	Highest 12-Month Average
Flow (MGD)			5.5	5.944		6.687	
Conductivity (µmhos/cm)				1,474		2,280	
pH			6.5 - 8.5	7.3		6.5 / 8.2	
BOD_5 (mg/l)	30	45		14.6	48.9	180	
Suspended Solids (mg/l)	30	45		51.1	114	400	
TDS (mg/l)	840 (12-month avg.)					930	773
Total Hardness (mg/l)	440 (12-month avg.)					360	312
TIN (mg/l)	10 (12-month avg.)					20.2	6.12
N-Nitrosodimethylamine (µg/l)						0.02	
Boron (mg/l)						0.83	
Chloride (mg/l)	180 (12-month avg.)					181	167
Sodium (mg/l)	120 (12-month avg.)					154	154
Sulfate (mg/l)	160 (12-month avg.)					276	211
Arsenic (µg/l)						10	
Barium (µg/l)						36	
Cadmium (mg/l)	0.01 (12-month avg.)					0.00018	0.00
Total Chromium (mg/l)	0.05 (12-month avg.)					0.00878	0.0056
Cobalt (mg/l)	0.2 (12-month avg.)					0.002	0.0006
Copper (mg/l)	1.0 (12-month avg.)					0.029	0.01
Cyanide (µg/l)						13	
Iron (mg/l)	0.3 (12-month avg.)					0.220	0.13
Lead (mg/l)	0.05 (12-month avg.)					0.004	0.003
Manganese (mg/l)	0.05 (12-month avg.)					0.067	0.04
Mercury (mg/l)	0.002 (12-month avg)					0.0002	0.00
Selenium (mg/l)	0.01 (12-month avg.)					0.008	0.0009
Silver (mg/l)	0.05 (12-month avg.)					0.00364	0.00
Phenolic Compounds (µg/l)						0.21	
Antimony (mg/l)	0.006 (12-month avg)					0.0147	0.00

[1] Effluent limitations set forth by Order No. 01-55.
[2] Data is from January 1, 2003 to September 30, 2006.

D. Compliance Summary

Based on a review of effluent monitoring data submitted by the Discharger for the period from 2003 through 2006, the wastewater discharged from the wastewater treatment facility was in violation of the following effluent limitations:

1. Compliance status for tertiary treated effluent at DP 001

a Year 2003. On August 3rd, Plant No. 1B exceeded the effluent coliform limit of 240 MPN with a value of 900 MPN. The data was reviewed and showed excellent effluent for that day. The 12 days prior and 5 days after, all samples came in at <2.0 MPN. There was no obvious cause for the high value, and operators continued to clean the system every two weeks after that.

b. Year 2004.

1). On December 3rd, Plant No. 1B effluent failed the *Ceriodaphnia* chronic toxicity test. The operators inspected the Plant, paying particular attention to all chemical feed areas. Nothing that would affect toxicity was identified. Accelerated testing was started on December 14th and the 21st and both tests passed, with monthly testing resuming in January of the following year.

2). In December, Plant No. 1B exceeded the discharge limits for turbidity. For 80 minutes turbidity was exceeded at a value of 5 NTU's. Plant No. 1 utilizes two equalization basins (EQ) prior to the tertiary filters. At that time, the West EQ wall was removed for upsizing, leaving just the concrete floor and sump surrounded by dirt walls. A sump pump was in place to remove water that leaked back through the gate from the EQ effluent wetwell, which kept water from entering the construction area. The sump pump would discharge water back into the wetwell that feeds the filters. During a rain event on December 28t and 29th, runoff from the exposed slopes around the equalization basin entered the sump and was pumped into the filter influent wetwell, allowing dirt and fines to enter the filters. The dirt and fines subsequently passed through the filters, affecting final effluent turbidity. Once the operator found the problem, the pumps were turned off and the operations supervisor reviewed the event with the operations staff to prevent it from happening again.

c. Year 2005.

1) On January 7th thru January 11th, a major storm event produced high flows that caused Plant No. 1B Secondary Clarifiers to washout, allowing solids to pass through to the final effluent. This resulted in violations of permit limits of 10 NTU for 9 hours on January 9th and 2.0 NTU for 24 hour average. Additionally, the Plant also exceeded the flow limit of 11.5 MGD. Recycled water lines were shut down and staff worked continuously on the filter air lifts.

2) In March, Plant No. 1B exceeded turbidity limits for 2.0 NTU for 24 hours and 5 NTU's for 72 minutes and 10 NTU's for 16 minutes. The problem was caused by

a combination of low mixed liquor suspended solids (MLSS) concentration and over chlorination. The operator stopped wasting and began pumping MLSS from Plant No. 1B to 1A.

3) On April 24th, Plant No. 1B exceeded permit limits for coliform with an MPN of 80. The City contacted the contract laboratory and asked for them to review their protocol.

4) During May, Plant No. 1B exceeded the 7-day coliform median four times, greater than 23 MPN twice, and greater than 240 MPN twice. The channel liner was cleaned and two complete banks of UV lamps were changed.

5) On July 10th, Plant No. 1B exceeded coliform of 240 MPN with a value of 1600 MPN. The contract laboratory was contacted and informed staff of need for proper sampling.

6) On August 30th and 31st, 24-hour Turbidity limits were exceeded two times: over 5 NTU for 72 minutes and 10 NTU three times. Due to construction tie-in, flow was stopped for five and one-half hours and the plant overloaded when put back on line. Future shutdowns will be evaluated more thoroughly.

7) In September, Plant No. 1A effluent exceeded the it's Suspended Solids 30-day average limit with a value of 51mg/L, weekly average twice at 82 and 114 mg/L and BOD_5 weekly average once with a value of 49 mg/L. Plant No. 1B effluent exceeded coliform limits three times, and had turbidity of 10 NTU five times and Turbidity 24-hour average limit of 2 NTU twice. This was a continuation of the problem from the previous month.

8) In October, Plant No. 1B exceeded the 7-day coliform median with a value greater than 2.2 MPN once. The UV system was thoroughly cleaned and weekly cleanings were scheduled from that time forward.

d. Year 2006.

1) On February 8th and 10th, Plant No. 1B effluent exceeded turbidity of 10 NTU three times, the first occurrence on February 8th lasting for 5 minutes and then 19 minutes later in the day. The second occurrence on February 10th lasted 8 minutes. This was caused by heavy solids in the filters at startup which was due to loss of solids into the effluent form Plant No. 1A and 1B. The City is currently reducing the amount of solids in Plant 1A and 1B to correct the problem.

2. Compliance status for secondary treated effluent at DP 002

1) In May 2004, Plant No. 1 effluent exceeded the 12-month average limit of 0.006 mg/L for antimony with a value of 0.00651 mg/L. The City's Source Control Division investigated potential industries that may have contributed to the high concentration of antimony, but no specific industry was found to discharge antimony in any significant amounts.

2) In January 2006, Plant No. 1A effluent exceeded the effluent flow discharge limit by 11.5% due to wastewater being diverted from Plant No. 1B to 1A. This was due to the City monitoring the quality of Plant No. 1B discharge at the tertiary filters which subsequently maintains a better quality of wastewater discharged to the Creek.

3) In February 2006, Plant 1A effluent exceeded the effluent flow discharge limit by 15.3%. This was due to a rollover of monitoring the quality of the discharge at the tertiary filters from January into February.

E. Planned Changes

1. Proposed Rerated Capacity.
   In the Application/Report of Waste Discharge, the Discharger requested the Regional Water Board to approve the rerating treatment capacity of filter units. In addition, the Discharger also requested to increase the flow from 5.5 mgd to 10 mgd into the three percolation ponds. The Regional Water Board will review the rerating issues. If approved, this Order will be reopened to include appropriate changes.

III. APPLICABLE PLANS, POLICIES, AND REGULATIONS

The requirements contained in the proposed Order are based on the requirements and authorities described in this section.

A. Legal Authorities

This Order is issued pursuant to section 402 of the federal Clean Water Act (CWA) and implementing regulations adopted by the U.S. Environmental Protection Agency (USEPA) and chapter 5.5, division 7 of the California Water Code (commencing with section 13370). It shall serve as a NPDES permit for point source discharges from this Facility to surface waters. This Order also serves as Waste Discharge Requirements (WDRs) pursuant to article 4, chapter 4, division 7 of the Water Code (commencing with section 13260).

B. California Environmental Quality Act (CEQA)

California Environmental Quality Act (CEQA). Under Water Code section 13389, this action to adopt an NPDES permit is exempt from the provisions of CEQA, Public Resources Code section 21000 et seq. (*County of Los Angeles v. California State Water Resources Control Board* (2006) 143 Cal.App.4th 985, mod. (Nov. 6, 2006, B184034) 50 Cal.Rptr.3d 619, 632-636.) For the plant expansion project, a mitigated negative declaration and addendum was adopted on July 2, 2003 and October 5, 2005, respectively. This action also involves the re-issuance of waste discharge requirements for an existing facility that discharges treated wastewater to land and as such, is exempt from the provisions of California Environmental Quality Act (commencing with Section

21100) in that the activity is exempt pursuant to Title 14 of the California Code of Regulations Section 15301".

C. State and Federal Regulations, Policies, and Plans

1. **Water Quality Control Plans.** The Regional Water Board adopted a Water Quality Control Plan for the Santa Ana Basin (hereinafter Basin Plan) that became effective on January 24, 1995. The Basin Plan designates beneficial uses, establishes water quality objectives, and contains implementation programs and policies to achieve those objectives for all waters addressed through the plan. In addition, State Water Resources Control Board (State Water Board) Resolution No. 88-63 (Sources of Drinking Water Policy) requires that, with certain exceptions, the Regional Water Board assign the municipal and domestic water supply use to water bodies. Based on the exception criteria specified in Resolution No. 88-63, the Regional Board excepted Reach 5 of the Santa Ana River downstream of Orange Avenue (Redlands) and downstream reaches from the municipal and domestic supply beneficial use.

   On January 22, 2004, the Regional Water Board adopted Resolution No. R8-2004-0001, amending the Basin Plan to incorporate revised boundaries for groundwater subbasins, now termed "management zones", new nitrate-nitrogen and TDS objectives for the new management zones, and new nitrogen and TDS management strategies applicable to both surface and ground waters. The State Water Resources Control Board and Office of Administrative Law (OAL) approved the N/TDS Amendment on September 30, 2004 and December 23, 2004, respectively. The surface water standards components of the N/TDS Amendment are awaiting EPA approval. Effluent limitations for TDS and TIN in this Order are based on N and TDS wasteload allocations included in the N/TDS Amendment and are at least as stringent as the limits in the prior Order.

   As previously discussed, the Facility discharges ultimately into Reach 3 of the Santa Ana River and affects downstream receiving surface and ground waters. The beneficial uses of these affected waterbodies are as follows:

Table 5. Basin Plan Beneficial Uses

Discharge Point	Receiving Water Name	Beneficial Use(s)
001	**Prado Basin Management Zone**	Present or Potential: Warm freshwater habitat (WARM); wildlife habitat (WILD), Water contact[6] recreation (REC-1) and non-contact water recreation (REC-2). Excepted from Municipal and Domestic Supply

6 *Access prohibited in some areas by Riverside County Flood Control.*

Table 5. Basin Plan Beneficial Uses

Discharge Point	Receiving Water Name	Beneficial Use(s)
	Reach 3 of Santa Ana River	Present or Potential: Agricultural supply (AGR), Ground water recharge (GWR), Water contact recreation (REC-1), Non-contact water recreation (REC-2), Warm freshwater habitat (WARM); Wildlife habitat (WILD), and Rare, threatened or endangered species (RARE). Excepted from Municipal and Domestic Supply
002	**Temescal Management Zone**	Present or Potential: Municipal and domestic water supply (MUN), agricultural supply (AGR), industrial service supply (IND), industrial process supply (PROC).
003	**Prado Basin Management Zone**	Present or Potential: Warm freshwater habitat (WARM); wildlife habitat (WILD), Water contact[4] recreation (REC-1) and non-contact water recreation (REC-2). Excepted from Municipal and Domestic Supply
	Temescal Management Zone	Present or Potential: Municipal and domestic water supply (MUN), agricultural supply (AGR), industrial service supply (IND), industrial process supply (PROC).

Requirements of this Order implement the Basin Plan.

2. **National Toxics Rule (NTR) and California Toxics Rule (CTR).** USEPA adopted the NTR on December 22, 1992, and later amended it on May 4, 1995 and November 9, 1999. About forty criteria in the NTR applied in California. On May 18, 2000, USEPA adopted the CTR. The CTR promulgated new toxics criteria for California and, in addition, incorporated the previously adopted NTR criteria that were applicable in the state. The CTR was amended on February 13, 2001. These rules contain water quality criteria for priority pollutants.

3. **State Implementation Policy.** On March 2, 2000, the State Water Board adopted the *Policy for Implementation of Toxics Standards for Inland Surface Waters, Enclosed Bays, and Estuaries of California* (State Implementation Policy or SIP). The SIP became effective on April 28, 2000 with respect to the priority pollutant criteria promulgated for California by the USEPA through the NTR and to the priority pollutant objectives established by the Regional Water Board in the Basin Plan. The SIP became effective on May 18, 2000 with respect to the priority pollutant criteria promulgated by the USEPA through the CTR. The State Water Board adopted amendments to the SIP on February 24, 2005 that became effective on July 13, 2005. The SIP establishes implementation provisions for priority pollutant criteria and objectives and provisions for chronic toxicity control. Requirements of this Order implement the SIP.

4. **Alaska Rule.** On March 30, 2000, USEPA revised its regulation that specifies when new and revised State and Tribal water quality standards (WQS) become effective for CWA purposes (40 CFR 131.21, 65 FR 24641, April 27, 2000). Under the revised regulation (also known as the Alaska rule), new and revised standards submitted to USEPA after May 30, 2000, must be approved by USEPA before being used for CWA purposes. The final rule also provides that standards already in effect and submitted to USEPA by May 30, 2000, may be used for CWA purposes, whether or not approved by USEPA.

5. **Antidegradation Policy.** Section 131.12 requires that the state water quality standards include an antidegradation policy consistent with the federal policy. The State Water Board established California's antidegradation policy in State Water Board Resolution No. 68-16. Resolution No. 68-16 incorporates the federal antidegradation policy where the federal policy applies under federal law. Resolution No. 68-16 requires that existing water quality be maintained unless degradation is justified based on specific findings. The Regional Water Board's Basin Plan implements, and incorporates by reference, both the State and federal antidegradation policies. The permitted discharge must be consistent with the antidegradation provision of section 131.12 and State Water Board Resolution No. 68-16.

6. **Anti-Backsliding Requirements.** Sections 402(o)(2) and 303(d)(4) of the CWA and federal regulations at title 40, Code of Federal Regulations[7] section 122.44(l) prohibit backsliding in NPDES permits. These anti-backsliding provisions require that effluent limitations in a reissued permit must be as stringent as those in the previous permit, with some exceptions in which limitations may be relaxed.

7. **Monitoring and Reporting Requirements.** Section 122.48 of 40 CFR requires that all NPDES permits specify requirements for recording and reporting monitoring results. Sections 13267 and 13383 of the CWC authorize the Regional Water Board to require technical and monitoring reports. The Monitoring and Reporting Program (MRP) establishes monitoring and reporting requirements to implement federal and State requirements. This MRP is provided in Attachment E.

D. Impaired Water Bodies on CWA 303(d) List-Not Applicable

E. Other Plans, Polices and Regulations-Not Applicable

---

7 *All further statutory references are to title 40 of the Code of Federal Regulations unless otherwise indicated.*

IV. RATIONALE FOR EFFLUENT LIMITATIONS AND DISCHARGE SPECIFICATIONS

The CWA requires point source dischargers to control the amount of conventional, non-conventional, and toxic pollutants that are discharged into the waters of the United States. The control of pollutants discharged is established through effluent limitations and other requirements in NPDES permits. There are two principal bases for effluent limitations in the Code of Federal Regulations: section 122.44(a) requires that permits include applicable technology-based limitations and standards; and section 122.44(d) requires that permits include water quality-based effluent limitations to attain and maintain applicable numeric and narrative water quality criteria to protect the beneficial uses of the receiving water.

A. Discharge Prohibitions

The discharge prohibitions are based on the Federal Clean Water Act, Basin Plan, State Water Resources Control Board's plans and policies, U.S. Environmental Protection Agency guidance and regulations, and previous permit Order No. 01-55 provisions and are consistent with the requirements set for other discharges regulated by NPDES permits adopted by the Regional Water Board.

B. Technology-Based Effluent Limitations

1. Scope and Authority

Section 301(b) of the CWA and implementing USEPA permit regulations at section 122.44, title 40 of the Code of Federal Regulations, require that permits include conditions meeting applicable technology-based requirements at a minimum, and any more stringent effluent limitations necessary to meet applicable water quality standards. The discharge authorized by this Order must meet minimum federal technology-based requirements based on Secondary Treatment Standards at Part 133 and/or Best Professional Judgment (BPJ) in accordance with Part 125, section 125.3.

Regulations promulgated in 40 CFR §125.3(a)(1) require technology-based effluent limitations for municipal Dischargers to be placed in waste discharge requirements based on Secondary Treatment Standards or Equivalent to Secondary Treatment Standards.

The Federal Water Pollution Control Act Amendments of 1972 (PL 92-500) established the minimum performance requirements for POTWs [defined in Section 304(d)(1)]. Section 301(b)(1)(B) of that Act requires that such treatment works must, as a minimum, meet effluent limitations based on secondary treatment as defined by the USEPA Administrator.

Based on this statutory requirement, USEPA developed secondary treatment regulations, which are specified in 40 CFR Part 133. These technology-based regulations apply to all municipal wastewater treatment plants and identify the minimum level of effluent quality attainable by secondary treatment in terms of biochemical oxygen demand (BOD_5), total suspended solids (TSS), and pH.

2. Applicable Technology-Based Effluent Limitations

This Facility meets the technology-based regulations for the minimum level of effluent quality attainable by secondary treatment in terms of BOD_5, total suspended solids and removal rate as summarized in Table 6, below. These effluent limitations have been carried over from the previous Order for secondary treated wastewater discharge to Discharge Point 002.

Table 6. Summary of Technology-based Effluent Limitations for Secondary treatment

Constituent	Average Weekly (mg/L)	Average Monthly (mg/L)	Average Monthly Removal Rate %
Biochemical Oxygen Demand, 5-day 20°C	45	30	85
Total Suspended Solids	45	30	85

C. Water Quality-Based Effluent Limitations (WQBELs)

1. Scope and Authority

Section 301(b) of the CWA and section 122.44(d) require that permits include limitations more stringent than applicable federal technology-based requirements where necessary to achieve applicable water quality standards.

Section 122.44(d)(1)(i) mandates that permits include effluent limitations for all pollutants that are or may be discharged at levels that have the reasonable potential to cause or contribute to an exceedance of a water quality standard, including numeric and narrative objectives within a standard. Where reasonable potential has been established for a pollutant, but there is no numeric criterion or objective for the pollutant, water quality-based effluent limitations (WQBELs) must be established using: (1) USEPA criteria guidance under CWA section 304(a), supplemented where necessary by other relevant information; (2) an indicator parameter for the pollutant of concern; or (3) a calculated numeric water quality criterion, such as a proposed state criterion or policy interpreting the state's narrative criterion, supplemented with other relevant information, as provided in section 122.44(d)(1)(vi).

The process for determining reasonable potential and calculating WQBELs when necessary is intended to protect the designated uses of the receiving water as specified in the Basin Plan, and achieve applicable water quality objectives and

criteria that are contained in other state plans and policies, or any applicable water quality criteria contained in the CTR and NTR.

2. **Applicable Beneficial Uses and Water Quality Criteria and Objectives**

   a. **The Basin Plan** specifies narrative and numeric water quality objectives applicable to surface water as follows.

Table 7. Summary of Applicable Water Quality Criteria

Constituents	Basis for Limitations
Ammonia Nitrogen	Dissociates under certain conditions to the toxic un-ionized form. Thus nitrogen discharges to the Santa Ana River, Reach 3, pose a threat to aquatic life and instream beneficial uses, as well as to the beneficial uses of affected groundwater. The Basin Plan specifies total ammonia and un-ionized ammonia objectives and an effluent limit of 5.0 mg/L for discharges to Santa Ana River, Reach 3
Hydrogen Ion (pH)	Hydrogen Ion (pH) is a measure of Hydrogen Ion concentration in the water. A range of 6.5 to 8.5 is specified ensures suitability for biota. This objective is specified in the Basin Plan for inland surface waters.
Oil & Grease	Oil and related materials have a high surface tension and are not soluble in water, resulting in odors and visual impacts.
Total Chlorine Residual	Chlorine and its reaction product are toxic to aquatic life. To protect aquatic life, the Basin Plan specifies that for wastewater discharged into inland surface waters the chlorine residual should not exceed 0.1 mg/L
Total Dissolved Solids	High levels of TDS can adversely impact aquatic life. The TDS limit for surface water discharges is based on the amended Basin Plan wasteload allocation of 700 mg/L and surface water discharge flow at 3.6 MGD.
Total Inorganic Nitrogen	Nitrogen discharges to the Santa Ana River pose a threat to aquatic life and instream beneficial uses, as well as to the beneficial uses of affected groundwater. The TIN limit for surface water discharges is based on the amended Basin Plan wasteload allocation of 10.0 mg/L and surface water discharge flow at 3.6 MGD.

TDS and TIN: The TDS and TIN limitations specified in the Order apply for discharges of tertiary treated effluent from DP 001 to PBMZ. The proposed TDS/TIN limits for direct discharges into the PBMZ are based on the waste load allocation specified on Table 5-5, of the amended Basin Plan.

TDS: This Order includes a TDS limit based on the quality of the water supplied to the service area plus a reasonable use increment of TDS for 250 mg/L. This reasonable use increment addition is discussed and authorized in the Basin Plan.

The more restrictive of the TDS wasteload allocation-based limit or the TDS limit based on water supply quality with a reasonable use increment applies to discharges from the Facility.

4) In accordance with 40 CFR Section 122.45(d), there may be instances in which the basis for a limit for a particular continuous discharge may be impracticable to be stated as a maximum daily, average weekly, or average monthly effluent limitation. The Regional Water Board has determined that it is not practicable to express TDS and TIN effluent limitations as average weekly and average monthly effluent limitations because the TDS and TIN objectives in the Basin Plan were established primarily to protect the underlying groundwater. Consequently, a 12-month average period is believed to be more appropriate.

5) Salt offset program: The Basin Plan recognizes that strict compliance with TDS limits may be difficult to achieve and it describes the regulatory approach the Regional Board uses to address such situations. The Board incorporates offset provisions in waste discharge requirements whereby dischargers can implement an approved program to offset TDS discharges in excess of specified TDS limits, provided that the Discharger makes all reasonable efforts to improve the TDS quality of the water supply (and thereby, the wastewater).

b. CTR and SIP

The California Toxics Rule (CTR) and State Implementation Policy specify numeric objectives for toxic substances and the procedures whereby these objectives are to be implemented. The procedures include those used to conduct reasonable potential analysis to determine the need for effluent limitations for priority and non-priority pollutants.

c. Requirement to meet 2.2 total coliform bacteria limit in the effluent

Article 3, Section 60305 of Title 22, Chapter 3, "Use of Recycled water for impoundments" of the California Code of Regulations specifies that recycled water used as a source of supply in a nonrestricted recreational impoundment shall be at all times an adequately disinfected, oxidized, coagulated, clarified, filtered wastewater (tertiary treated). The degree of treatment specified represents an approximately 5-log reduction in the virus content of the water. The California State Department of Health Services (CDHS) has determined that this degree of virus removal is necessary to protect the health of people using these impoundments for water contact recreation. The CDHS has developed wastewater disinfection guidelines ("Wastewater Disinfection for Health Protection", Department of Health Services, Sanitary Engineering Branch, February 1987) for discharges of wastewater to surface waters where water contact recreation (REC-1) is a beneficial use. The disinfection guidelines recommend the same treatment requirements for wastewater discharges to REC-1 waters as those stipulated in Title 22 for supply of recycled water to nonrestricted recreational impoundments, since the public health risks under both scenarios are analogous. The disinfection guidelines are based on sound

science and are widely used as guidance to assure public health and beneficial use protection.

Neither the PBMZ nor the Santa Ana River, Reach 3 are "nonrestricted recreational impoundments," nor is "recycled water[8]" being used as a supply source for the PBMZ and River pursuant to the definitions in Title 22. However, except during major storms, most of the flow in the PBMZ and River is composed of treated municipal wastewater discharges. The PBMZ and River are used for water contact recreation and, accordingly, are designated REC-1 (water contact beneficial use). People recreating in the PBMZ and River face an exposure similar to those coming in contact with recycled water in an impoundment. Therefore, to protect the water contact recreation beneficial use and to prevent nuisance and health risk, it is necessary and appropriate to require the same degree of treatment for wastewater discharges to the PBMZ and River as would be required for the use of recycled water in a nonrestricted recreational impoundment. Thus, this Order specifies requirements based on tertiary or equivalent treatment.

3. Determining the Need for WQBELs

In accordance with Section 1.3 of the SIP, the Regional Water Board conducted a reasonable potential analysis (RPA) for each priority pollutant with an applicable criterion or objective to determine if a WQBEL is required in the Order. The Regional Water Board analyzed effluent data to determine if a pollutant in a discharge has the reasonable potential to cause or contribute to an excursion above a state water quality standard. For all parameters that have the reasonable potential to cause or contribute to an excursion above a water quality standard, numeric WQBELs are required. The RPA considers criteria from the CTR, and when applicable, water quality objectives specified in the Basin Plan.

Sufficient data are needed to conduct a complete RPA. If data are not sufficient, the Discharger will be required to gather the appropriate data for the Regional Water Board to conduct the RPA. Upon review of the data, and if the Regional Water Board determines that WQBELs are needed to protect the beneficial uses, the permit will be reopened for appropriate modification.

The RPA was performed for the priority pollutants for which effluent data were available. These data were used in the RPA and are summarized in the following Table. The priority pollutants, selenium, zinc, Dibenzo(a,h)Anthracene, 2,3,7,8-TCDD, and bis(2-ethylhexyl)phthalate are determined to have reasonable potential to exceed water quality objectives. Consequently, effluent limits for selenium, zinc, Dibenzo(a,h)Anthracene, 2,3,7,8-TCDD, and bis(2-ethylhexyl)phthalate are included in the Order. Mercury and 4,4'-DDT were detected once during last 4 years of monthly monitoring; these findings appear to be an anomaly. Therefore, no effluent

8 *As defined in the Reclamation Criteria, recycled water means water which, as a result of treatment of domestic wastewater, is suitable for a direct beneficial use or a controlled use that would not otherwise occur.*

limitations for these constituents are included in the Order. However, the monitoring frequency for 4,4'-DDT is increased to quarterly and for mercury monthly.

For chromium IV, the Discharger has been conducting analysis for chromium IV using a total chromium method. This Order requires that monitoring be conducted instead for chromium IV on a monthly basis. If the analytical data show reasonable potential, the permit will be reopened to include effluent limitations for chromium IV.

The following tables summarize the RPA calculation. The RPA evaluation using monitoring data was submitted by the Discharger.

Table 9. RPA Evaluation

Parameter	Unit	Effluent	CTR			Is Effluent Limit Required?		
		MEC	CMC	CCC	Human Health for consumption of water & organisms	CMC	CCC	Human Health
Selenium	µg/L	20	5.0			yes		
Zinc	µg/l	1554	278	278		yes	yes	
Dibenzo(a,h) Anthracene	µg/l	0.19			0.049			yes
2,3,7,8-TCDD	µg/l	0.00000129			0.000000014			yes
Bis(2-ethylhexyl) phthalate	µg/L	6.6	--	--	5.9	--		yes

4. WQBEL Calculations

a. For priority pollutants, water quality based effluent limits are based on monitoring results and the calculation process outlined in Section 1.4 of the California Toxic Rule and the Policy for Implementation of Toxics Standards for Inland Surface Waters, Enclosed Bays and Estuaries of California are summarized in the following Table 10.

Table 10. Limitations Calculations

Corona Plant 1 to DP 001

unit in ug/l

					CV = 0.6, long-term average			Aquatic Life		Human		Permit Limit	
	Caltoxics				Acute M	Chronic M	**LTA**	Objective/limits		Health Limits		Concentration Limit	
	Freshwater		Human Health		0.321	0.527		**3.11**	**1.55**	**2.01**			
Constituent	CMC	CCC	H_2O+Org	Organisms	Acute LTA	Chronic LTA		MDEL	AMEL	MDEL	AMEL	**MDEL**	**AMEL**
selenium		5.0				2.64	***2.64***	8.19	4.08			**8.2**	**4.1**
zinc	278	278			89	146	***89***	278	138			**278**	**138**
Dibenzo(a,h)Anthracene			0.0044	0.049						0.0983	0.0490	**0.098**	**0.049**
2,3,7,8-TCDD			0.000000013	0.000000014						0.000000028	0.000000014	**0.000000028**	**0.000000014**
Bis(2-ethylhexyl)phthalate			1.8	5.9						11.8	5.9	**11.8**	**5.9**

5. Whole Effluent Toxicity (WET)

This Order does not specify WET limits but requires chronic toxicity monitoring. The monitoring data indicated that the two month median value of 1.0 TU_C for survival or reproduction endpoint has not been exceeded.

D. Best Professional Judgment-Based Effluent Limitations

For tertiary treated wastewater, the BOD_5 and TSS concentration limits are based on Best Professional Judgment. The secondary treatment standards specify BOD_5 and TSS concentration limits that are less stringent.

Table 11. Tertiary Effluent BOD_5 and TSS Limits

Constituent	Average Weekly	Average Monthly
Biochemical Oxygen Demand	30 mg/l	20 mg/l
Suspended Solids	30 mg/l	20 mg/l

E. Final Effluent Limitations at DP 001

1. Satisfaction of Anti-Backsliding Requirements

All effluent limitations in this Order are at least as stringent as the effluent limitations in the previous Order.

2. Satisfaction of Antidegradation Policy

Discharges in conformance with the requirements of this Order will not result in a lowering of water quality and therefore conform to antidegradation requirements specified in Resolution No. 68-16, which incorporates the federal antidegradation policy at 40 CFR 131.12 where, as here, it is applicable. The Discharger is implementing a program to enhance recycled water use. No lowering of groundwater quality is projected to occur as the result of recycled water use. Where such lowering of water quality may occur with respect to TDS and TIN, the Discharger is required by this Order, to implement an "offset program" to mitigate that water quality effect.

3. Stringency of Requirements for Individual Pollutants

Water quality-based effluent limitations have been scientifically derived to implement water quality objectives that protect beneficial uses. Both the beneficial uses and the water quality objectives have been approved pursuant to federal law and are the applicable federal water quality standards. To the extent that toxic pollutant water quality-based effluent limitations were derived from the CTR, the CTR is the applicable standard pursuant to section 131.38. The scientific procedures for calculating the individual water quality-based effluent limitations for priority pollutants are based on the CTR-SIP, which was approved by USEPA on May 18, 2000. All

beneficial uses and water quality objectives contained in the Basin Plan were approved under state law and submitted to and approved by USEPA prior to May 30, 2000. Any water quality objectives and beneficial uses submitted to USEPA prior to May 30, 2000, but not approved by USEPA before that date, are nonetheless "applicable water quality standards for purposes of the CWA" pursuant to section 131.21(c)(1). Collectively, this Order's restrictions on individual pollutants are no more stringent than required to implement the requirements of the CWA.

4. Summary of Final Effluent Limitations:

Table 12. Summary of Final Effluent Limitations at Discharge Point 001

Parameter	Units	Effluent Limitations					Basis
		Average Monthly	Average Weekly	Max Daily	Instantaneous Minimum	Instantaneous Maximum	
BOD_5	mg/l	20	30	--	--	--	PO
Total Suspended Solids	mg/l	20	30	--	--	--	PO
Total Residual Chlorine	mg/l	--		--	--	0.1	BP
TDS	mg/l	700 (12-M Ave.), or 250+TDS in w.supply					PO, BP
Total Inorganic Nitrogen	"	10 (12-M Ave.)					
Ammonia-Nitrogen	mg/l	4.5					PO, BP
pH	unit	--	--	--	6.5	8.5	PO, BP
Selenium	µg/l	4.1		8.2			CTR, SIP
Zinc	µg/l	138		278			CTR, SIP
Dibenzo(a,h)Anthracene	µg/l	0.049		0.098			CTR, SIP
2,3,7,8-TCDD	µg/l	0.000000014		0.000000028			CTR, SIP
Bis(2-ethylhexyl) phthalate	µg/l	5.9		11.8			CTR, SIP
Coliform	MPN		2.2 Median of last 7 days				PO, Title 22

Notes: PO = Previous Order; BP= Basin Plan.

F. Interim Effluent Limitations – DP 001

Section 2.1 Compliance Schedules of the SIP specifies that "Based on an existing Discharger's request and demonstration that it is infeasible for the Discharger to achieve immediate compliance with a CTR criterion, or with an effluent limitation based on a CTR criterion, the Regional Water Board may establish a compliance schedule in an NPDES permit. The Discharger has demonstrated that it is infeasible to achieve compliance with effluent limits for selenium, zinc, Dibenzo(a,h)Anthracene, 2,3,7,8-TCDD, and bis(2-ethylhexyl)phthalate and has requested a schedule for compliance with these limits in this Order. The SIP also requires (Section 2.2.1 Interim Requirements under a Compliance Schedule) that if a compliance schedule is granted and exceeds one year, the Regional Board shall establish interim numeric limitations and may impose other relevant requirements.

This Order requires that compliance with the final effluent limitations for selenium, zinc, Dibenzo(a,h)Anthracene, 2,3,7,8-TCDD, and bis(2-ethylhexyl)phthalate specified in Table 9, above, shall be achieved as soon as possible but no later than March 31, 2009. In the interim, the Discharger is required to meet the interim limitations shown in Table 13, below until March 31, 2009:

Table 13. Summary of Interim Effluent Limitations at DP 001

Parameter	Units	Effluent Limitations		Basis
		Average Monthly	Maximum Daily	
Selenium	µg/l	20	20	SIP
Zinc	µg/l	303	303	SIP
Dibenzo(a,h)Anthracene	µg/l	0.19	0.19	SIP
2,3,7,8-TCDD	µg/l	0.00000129	0.00000129	SIP
Bis(2-ethylhexyl) phthalate	µg/l	6.6	6.6	SIP

G. Land Discharge Specifications – DP 002

The Discharger discharges up to 5.5 mgd secondary treated wastewater into three percolation ponds, which overly the Temescal Management Zone.

Discharge limitations for metals in this Order are the same limitations specified in previous Order No. 01-55 for DP 002.

TDS and TIN: The TDS and TIN limitations specified in the Order apply for discharges of secondary treated effluent from DP 002 to three percolation ponds. The TDS/TIN limits are based on the amended Basin Plan.

Table 14. TDS/TIN Limits for Temescal MZ

Constituent	Limits (mg/L)
TDS	770
NO_3-N	10
TIN	13.3

Nitrogen loss coefficient used is 25%.
TIN, mg/L = 10/(1-0.25) = 13.3 mg/L

d) In accordance with 40 CFR Section 122.45(d), there may be instances in which the basis for a limit for a particular continuous discharge may be impracticable to be stated as a maximum daily, average weekly, or average monthly effluent limitation. The Regional Water Board has determined that it is not practicable to express TDS and TIN effluent limitations as average weekly and average monthly effluent limitations because the TDS and TIN objectives in the Basin

Plan were established primarily to protect the underlying groundwater. Consequently, a 12-month average period is believed to be more appropriate.

Table 15. Summary of Final Effluent Limitations at Discharge Point 002

Parameter	Units	Effluent Limitations					Basis
		Average Monthly	Average Weekly	Max Daily	Instantaneous Minimum	Instantaneous Maximum	
Flow	mgd	5.5					PO
BOD_5	mg/l	30	45	--	--	--	PO
Total Suspended Solids	mg/l	30	45	--	--	--	PO
TDS	mg/l	770 (12-M Ave.)					BP
Total Inorganic Nitrogen	"	13.3 (12-M Ave.)					"
pH	unit	--	--	--	6.0	9.0	PO, BP
Antimony	mg/l	0.006					PO
Cadmium	"	0.01					"
Chromium, VI	"	0.05					"
Cobalt	"	0.2					"
Copper	"	1.0					"
Iron	"	0.3					"
Lead	"	0.05					"
Mercury	"	0.002					"
Selenium	"	0.01					"
Silver	"	0.05					"

Notes: PO = Previous Order; BP= Basin Plan.

H. Reclamation Specifications - DP 003

1. Section 13523 of the California Water Code provides that a Regional Water Board, after consulting with and receiving the recommendations from the California Department of Health Services (CDHS) and any party who has requested in writing to be consulted, and after any necessary hearing, shall prescribe water reclamation requirements for water which is used or proposed to be used as recycled water, if, in the judgment of the Board, such requirements are necessary to protect the public health, safety, or welfare. Section 13523 further provides that such requirements shall include, or be in conformance with, the statewide uniform water recycling criteria established by the CDHS pursuant to California Water Code Section 13521.

2. Reclamation specifications in the proposed Order are based upon the recycling criteria contained in Title 22, Division 4, Chapter 3, Sections 60301 through 60355, California Code of Regulations, "Guidelines for Use of Reclaimed Water" by the California Department of Health Services, and Pursuant to the California Water Code Section 13521. Because the recycled water is or will be used in school yards and for groundwater recharge, tertiary treatment is appropriate.

3. For recycled water use, this Order (Section IV.C.1.b to c. Reclamation Specifications – Discharge Points 003) specifies TDS/TIN limits based on the water quality objectives for Prado Basin and Temescal MZ.

   TDS/TIN limits for recycled water reuse are based on the amended Basin Plan. Water quality objectives for the Prado Basin and Temescal MZ in Table 4-1 of the Basin Plan are as follows.

Table 16. Water Quality Objectives at DP 003, mg/l

Water Management Zone	TDS	NO_3-N
Prado Basin Surface Water management zone (Santa Ana River Reach 3 objectives apply[9])	700	
Temescal Management Zone	770	10

The formula used to calculate the TIN limit for discharges to Temecal MZ is as follows:

TIN Discharge limit (mg/l)=(MZ nitrate-nitrogen WQO) / (1-nitrogen loss coefficient)
The "nitrogen loss coefficient" is 25%. TIN=13.3 mg/l.

V. RATIONALE FOR RECEIVING WATER LIMITATIONS

A. Surface Water

The surface water receiving water limitations in the proposed Order are based upon the water quality objectives contained in the Basin Plan. As such, they are required part of the proposed Order.

B. Groundwater

The receiving groundwater limitations in the proposed Order are based upon the water quality objectives contained in the Basin Plan.

9 *Per the Basin Plan (Chapter 4), the water quality objectives specified for affected surface streams in the PBMZ apply for regulatory purposes. In this case, the objectives for the Santa Ana River Reach 3 apply.*

VI. RATIONALE FOR MONITORING AND REPORTING REQUIREMENTS

Section 122.48 of 40 CFR requires all NPDES permits to specify recording and reporting of monitoring results. Sections 13267 and 13383 of the CWC authorize the Water Boards to require technical and monitoring reports. The MRP, Attachment E of this Order, establishes monitoring and reporting requirements to implement federal and state requirements. The following provides the rationale for the monitoring and reporting requirements contained in the MRP for this Facility.

A. Influent Monitoring

This Order carries forward the treatment plant influent monitoring requirements without change. Influent monitoring is required to determine the effectiveness of the treatment program and assess treatment plant performance.

B. Effluent Monitoring

The Discharger is required to conduct monitoring of the permitted discharges in order to evaluate compliance with permit conditions. Monitoring requirements are given in the proposed monitoring and reporting program (Attachment E). This provision requires compliance with the monitoring and reporting program, and is based on 40 CFR 122.44(i), 122.62, 122.63 and 124.5. The SMP is a standard requirement in almost all NPDES permits (including the proposed Order) issued by the Regional Water Board. In addition to containing definitions of terms, it specifies general sampling/analytical protocols and the requirements of reporting of spills, violations, and routine monitoring data in accordance with NPDES regulations, the California Water Code, and Regional Water Board's policies. The monitoring and reporting program also contains sampling program specific for the Discharger's wastewater treatment plant. It defines the sampling stations and frequency, pollutants to be monitored, and additional reporting requirements. Pollutants to be monitored include all pollutants for which effluent limitations are specified. Further, in accordance with Section 1.3 of the SIP, periodic monitoring is required for all priority pollutants defined by the CTR, for which criteria apply and for which no effluent limitations have been established, to evaluate reasonable potential to cause or contribute to an excursion above a water quality standard.

This Order modifies the monitoring requirements specified in Order No. 01-55 and adds monitoring requirements for EPA priority pollutants.

C. Whole Effluent Toxicity Testing Requirements

Whole effluent toxicity (WET) protects the receiving water quality from the aggregate toxic effect of a mixture of pollutants in the effluent. WET tests measure the degree of response of exposed aquatic test organisms to an effluent. The WET approach allows for protection of the narrative "no toxics in toxic amounts" criterion while implementing numeric criteria for toxicity. There are two types of WET tests: acute and chronic. An

acute toxicity test is conducted over a shorter time period and measures mortality. A chronic toxicity test is conducted over a longer period of time and may measure mortality, reproduction, and growth.

The Basin Plan specifies a narrative objective for toxicity, requiring that all waters be maintained free of toxic substances in concentrations that are lethal to or produce other detrimental response on aquatic organisms. Detrimental response includes but is not limited to decreased growth rate, decreased reproductive success of resident or indicator species, and/or significant alterations in population, community ecology, or receiving water biota.

In addition to the Basin Plan requirements, Section 4 of the SIP states that a chronic toxicity effluent limitation is required in permits for all discharges that will cause, have the reasonable potential to cause, or contribute to chronic toxicity in receiving waters. Therefore, in accordance with the SIP, this Order requires the Discharger to conduct chronic toxicity testing. In addition, the Order establishes thresholds that when exceeded requires the Discharger to conduct accelerated toxicity testing and/or conduct toxicity identification evaluation (TIE) studies.

This Order requires the Discharger to conduct chronic toxicity testing of the effluent on a monthly basis. The Order also requires the Discharger to conduct an Initial Investigation Toxicity Reduction Evaluation (IITRE) program when either the two-month median of toxicity test results exceeds 1 TUc or any single test exceeds 1.7 TUc for survival endpoint. Based on the results of this investigation program and at the discretion of the Executive Officer, a more rigorous Toxicity Reduction Evaluation/Toxicity Identification Evaluation (TRE/TIE) may be required. A re-opener provision is included in the Order to incorporate a chronic toxicity effluent limitation if warranted by the toxicity test results.

D. Receiving Water Monitoring

1. Surface Water

Receiving water monitoring is required to determine compliance with receiving water limitations and to characterize the water quality of the receiving water. Requirements are based on the Basin Plan.

2. Temescal Management Zone – Not Applicable

E. Other Monitoring Requirements

1. **Water Supply Monitoring -** The Discharger will be required to collect a sample of each source of water supplied and analyze for total dissolved solids. The result of this monitoring will to show compliance with TDS limitations in the Order.

2. **Biosolids Monitoring** - This Order continues the monitoring requirements specified in Order No. 01-55, with modification. The Discharger is now required to submit monitoring data annually instead of quarterly.

3. **Pretreatment Monitoring** - These monitoring and reporting requirements are established pursuant EPA 40 CFR 403 regulations.

VII. RATIONALE FOR PROVISIONS

A. Standard Provisions

Standard Provisions, which in accordance with 40 CFR §§122.41and 122.42, apply to all NPDES discharges and must be included in every NPDES permit, are provided in Attachment D to the Order.

Title 40 CFR Section 122.41(a)(1) and (b) through (n) establish conditions that apply to all State-issued NPDES permits. These conditions must be incorporated into the permits either expressly or by reference. If incorporated by reference, a specific citation to the regulations must be included in the Order. 40 CFR Section 123.25(a)(12) allows the State to omit or modify conditions to impose more stringent requirements. In accordance with Section 123.25, this Order omits federal conditions that address enforcement authority specified in 40 CFR Sections 122.41(j)(5) and (k)(2) because the enforcement authority under the CWC is more stringent. In lieu of these conditions, this Order incorporates by reference CWC Section 13387(e).

B. Special Provisions

1. **Reopener Provisions**

   This provision is based on 40 CFR Part 123. The Regional Water Board may reopen the permit to modify permit conditions and requirements. Causes for modifications include the promulgation of new regulations, modification in sludge use or disposal practices, or adoption of new regulations by the State Board or Regional Water Board, including revisions to the Basin Plan.

2. **Special Studies and Additional Monitoring Requirements**

   a. This requirement is carried over from the previous permit.

   b. This requirement is carried over from the previous permit.

   c. Toxicity Identification Evaluations or Toxicity Reduction Evaluations. This provision is based on the SIP, Section 4, Toxicity Control Provisions.

   d. Discharges to Outfall Serial No. DP-002
      Under Order No. 01-55 the Discharger was allowed to discharge up to 5.5 mgd of secondary effluent through outfall Serial No. 002, (Lincoln/Cota percolation/evaporation ponds). The Discharger has requested to be allowed to discharge up to 10 MGD of secondary effluent to the Lincoln/Cota

percolation/evaporation ponds. The Lincoln/Cota percolation/evaporation ponds site is located adjacent to an unlined section of Temescal Creek and adjacent to the PBMZ. Both waterbodies are designated REC-1 and effluent limits placed on discharges that would affect these waters must be sufficient to protect this use. In light of the proximity of the pond sites to these waters, there is the potential that wastewater discharged to the ponds does not receive adequate treatment to remove pathogens prior to surfacing within Temescal Creek and/or the PBMZ. If this is the case, then the REC-1 use is not protected. Therefore, this Order requires the Discharger to conduct an appropriate investigation, in accordance with a workplan approved by Regional Board staff, to determine whether and to what extent discharges to the ponds receive tertiary equivalent treatment prior to surfacing in Temescal Creek and/or the PBMZ. No consideration of allowing increased wastewater discharges to the ponds will be given until this investigation is complete. Further, should the investigation demonstrate that wastewater discharged to the ponds does not receive tertiary equivalent treatment, then this Order will be reopened to specify requirements for discharges to the ponds sufficient to protect the REC-1 use.

3. **Best Management Practices and Pollution Prevention** -The requirements are based on the SIP Section 2.4.5.1.

4. **Construction, Operation, and Maintenance Specifications** - The requirements are based on requirements that were specified in the prior Order.

5. **Special Provisions for Municipal Facilities - POTWs Only**

   a. Sewer Collection System Requirements: This requirement is based on a memorandum from the State Water Board regarding enrolment under General Waste Discharge Requirements for Collection System Agencies (Order No. 2006-0003 DWQ)

   b. Biosolids: On February 19, 1993, the USEPA issued a final rule for the use and disposal of sewage sludge, 40 CFR, Part 503. This rule requires that producers of sewage sludge meet certain reporting, handling, and disposal requirements. The State of California has not been delegated the authority to implement this program, therefore, the U.S. Environmental Protection Agency is the implementing agency.

   c. Pretreatment: The treatment plant capacity is 11.5 mgd and there are significant industrial users within the service areas. Consequently, this Order contains requirements for the implementation of an effective pretreatment program pursuant to Section 307 of the Federal Clean Water Act; Parts 35 and 403 of Title 40, Code of Federal Regulations (40 CFR 35 and 40 CFR 403); and/or Section 2233, Title 23, California Code of Regulations.

6. **Other Special Provisions – Not Applicable**

7. Compliance Schedules

This Order establishes final effluent limitations for Selenium, Zinc, Dibenzo(a,h)Anthracene, 2,3,7,8-TCDD, and Bis(2-ethylhexyl)phthalate that are new limits for the discharges. This Order also contains a compliance schedule that provides the Discharger time to bring their discharges into compliance with the newly established final limits. In accordance with Section 2.1 of the SIP, compliance schedules can only be provided by the Board after the Discharger has submitted a report that demonstrates that it is infeasible for the Discharger to achieve immediate compliance with newly established final effluent limitations.

On January 11, 2007, the Discharger requested that a compliance schedule for Selenium, Zinc, Dibenzo(a,h)Anthracene, 2,3,7,8-TCDD, and Bis(2-ethylhexyl)phthalate limitations be included in this Order. The Discharger demonstrated that immediate compliance with the proposed effluent limitations for these pollutants is infeasible.

The compliance schedule included in this Order is based on the shortest practicable time required to achieve compliance. This Order includes interim and final limits and a schedule for compliance with the final limitations. The maximum detected effluent concentrations for these pollutants are set as the interim average monthly effluent limits. This is in accordance with SIP Section 2.2.1, which stipulates that "Numeric interim limitations for the pollutant must be based on current treatment Facility performance or on existing permit limitations, whichever is more stringent."

The proposed permit allows the Discharger up to April 1, 2009, to achieve compliance with the final limitations for Selenium, Zinc, Dibenzo(a,h)Anthracene, 2,3,7,8-TCDD, and Bis(2-ethylhexyl)phthalate. Annual reporting is required to inform the Regional Board about the progress made by the Discharger to achieve compliance with the final limitations within the specified time.

VIII. PUBLIC PARTICIPATION

The California Regional Water Quality Control Board, Santa Ana Region (Regional Water Board) is considering the issuance of waste discharge requirements (WDRs) that will serve as a National Pollutant Discharge Elimination System (NPDES) permit for the Regional Water Recycling Plants. As a step in the WDR adoption process, the Regional Water Board staff has developed tentative WDRs. The Regional Water Board encourages public participation in the WDR adoption process.

A. Notification of Interested Parties

The Regional Water Board has notified the Discharger and interested agencies and persons of its intent to prescribe waste discharge requirements for the discharge and has provided them with an opportunity to submit their written comments and recommendations. Notification was provided through the posting of the Notice of Public

Hearing at the City Hall and publication in the local newspaper. Notification was also provided on the Regional Water Board website: http://www.waterboards.ca.gov/santaana , on January 31, 2007.

B. Written Comments

The staff determinations are tentative. Interested persons are invited to submit written comments concerning these tentative WDRs. Comments must be submitted either in person or by mail to the Executive Office at the Regional Water Board at the address above on the cover page of this Order.

To be fully responded to by staff and considered by the Regional Water Board, written comments should be received at the Regional Water Board offices by 5:00 p.m. on February 12, 2007:

Jun Martirez
California Regional Water Quality Control Board
Santa Ana Region
3737 Main Street, Suite 500
Riverside, CA 92501-3348

C. Public Hearing

The Regional Water Board will hold a public hearing on the tentative WDRs during its regular Board meeting on the following date and time and at the following location:

Date:	March 2, 2007
Time:	9:00 A.M.
Location:	City of Council Chambers of Loma Linda 25541 Barton Road City of Loma Linda, CA

Interested persons are invited to attend. At the public hearing, the Regional Water Board will hear testimony, if any, pertinent to the discharge, WDRs, and permit. Oral testimony will be heard; however, for accuracy of the record, important testimony should be in writing.

Please be aware that dates and venues may change. Our web address http://www.waterboards.ca.gov/santaana where you can access the current agenda for changes in dates and locations.

D. Waste Discharge Requirements Petitions

Any aggrieved person may petition the State Water Resources Control Board to review the decision of the Regional Water Board regarding the final WDRs. The petition must be submitted within 30 days of the Regional Water Board's action to the following address:

State Water Resources Control Board
Office of Chief Counsel
P.O. Box 100, 1001 I Street
Sacramento, CA 95812-0100

E. Information and Copying

The Report of Waste Discharge (ROWD), related documents, tentative effluent limitations and special provisions, comments received, and other information are on file and may be inspected at the address above at any time between 9:00 a.m. and 3:00 p.m. Monday through Friday. Copying of documents may be arranged through the Regional Water Board by calling (951) 320-2008.

F. Register of Interested Persons

Any person interested in being placed on the mailing list for information regarding the WDRs and NPDES permit should contact the Regional Water Board, reference this Facility, and provide a name, address, and phone number.

G. Additional Information

Requests for additional information or questions regarding this Order should be directed to Jane Qiu at (951) 320-2008.

ATTACHMENT G - EPA PRIORITY POLLUTANT LIST

EPA PRIORITY POLLUTANT LIST					
Metals		**Acid Extractibles**		**Base/Neutral Extractibles (continuation)**	
1.	Antimony	45.	2-Chlorophenol	91.	Hexachloroethane
2.	Arsenic	46.	2,4-Dichlorophenol	92.	Indeno (1,2,3-cd) Pyrene
3.	Beryllium	47.	2,4-Dimethylphenol	93.	Isophorone
4.	Cadmium	48.	2-Methyl-4,6-Dinitrophenol	94.	Naphthalene
5a.	Chromium (III)	49.	2,4-Dinitrophenol	95.	Nitrobenzene
5b.	Chromium (VI)	50.	2-Nitrophenol	96.	N-Nitrosodimethylamine
6.	Copper	51.	4-Nitrophenol	97.	N-Nitrosodi-N-Propylamine
7.	Lead	52.	3-Methyl-4-Chlorophenol	98.	N-Nitrosodiphenylamine
8.	Mercury	53.	Pentachlorophenol	99.	Phenanthrene
9.	Nickel	54.	Phenol	100.	Pyrene
10.	Selenium	55.	2, 4, 6 – Trichlorophenol	101.	1,2,4-Trichlorobenzene
11.	Silver	**Base/Neutral Extractibles**		**Pesticides**	
12.	Thallium	56.	Acenaphthene	102.	Aldrin
13.	Zinc	57.	Acenaphthylene	103.	Alpha BHC
Miscellaneous		58.	Anthracene	104.	Beta BHC
14.	Cyanide	59.	Benzidine	105.	Delta BHC
15.	Asbestos (not required unless requested)	60.	Benzo (a) Anthracene	106.	Gamma BHC
16.	2,3,7,8-Tetrachlorodibenzo-P-Dioxin (TCDD)	61.	Benzo (a) Pyrene	107.	Chlordane
Volatile Organics		62.	Benzo (b) Fluoranthene	108.	4, 4' - DDT
17.	Acrolein	63.	Benzo (g,h,i) Perylene	109.	4, 4' - DDE
18.	Acrylonitrile	64.	Benzo (k) Fluoranthene	110.	4, 4' - DDD
19.	Benzene	65.	Bis (2-Chloroethoxy) Methane	111.	Dieldrin
20.	Bromoform	66.	Bis (2-Chloroethyl) Ether	112.	Alpha Endosulfan
21.	Carbon Tetrachloride	67.	Bis (2-Chloroisopropyl) Ether	113.	Beta Endosulfan
22.	Chlorobenzene	68.	Bis (2-Ethylhexyl) Phthalate	114.	Endosulfan Sulfate
23.	Chlorodibromomethane	69.	4-Bromophenyl Phenyl Ether	115.	Endrin
24.	Chloroethane	70.	Butylbenzyl Phthalate	116.	Endrin Aldehyde
25.	2-Chloroethyl Vinyl Ether	71.	2-Chloronaphthalene	117.	Heptachlor
26.	Chloroform	72.	4-Chlorophenyl Phenyl Ether	118.	Heptachlor Epoxide
27.	Dichlorobromomethane	73.	Chrysene	119.	PCB 1016
28.	1,1-Dichloroethane	74.	Dibenzo (a,h) Anthracene	120.	PCB 1221
29.	1,2-Dichloroethane	75.	1,2-Dichlorobenzene	121.	PCB 1232
30.	1,1-Dichloroethylene	76.	1,3-Dichlorobenzene	122.	PCB 1242
31.	1,2-Dichloropropane	77.	1,4-Dichlorobenzene	123.	PCB 1248
32.	1,3-Dichloropropylene	78.	3,3'-Dichlorobenzidine	124.	PCB 1254
33.	Ethylbenzene	79.	Diethyl Phthalate	125.	PCB 1260
34.	Methyl Bromide	80.	Dimethyl Phthalate	126.	Toxaphene
35.	Methyl Chloride	81.	Di-n-Butyl Phthalate		
36.	Methylene Chloride	82.	2,4-Dinitrotoluene		
37.	1,1,2,2-Tetrachloroethane	83.	2-6-Dinitrotoluene		
38.	Tetrachloroethylene	84.	Di-n-Octyl Phthalate		
39.	Toluene	85.	1,2-Dipenylhydrazine		
40.	1,2-Trans-Dichloroethylene	86.	Fluoranthene		
41.	1,1,1-Trichloroethane	87.	Fluorene		
42.	1,1,2-Trichloroethane	88.	Hexachlorobenzene		
43.	Trichloroethylene	89.	Hexachlorobutadiene		
44.	Vinyl Chloride	90.	Hexachlorocyclopentadiene		

ATTACHMENT H – MINIMUM LEVELS

MINIMUM LEVELS IN PPB (µg/l)

Table 1- VOLATILE SUBSTANCES[1]	GC	GCMS
Acrolein	2.0	5
Acrylonitrile	2.0	2
Benzene	0.5	2
Bromoform	0.5	2
Carbon Tetrachloride	0.5	2
Chlorobenzene	0.5	2
Chlorodibromomethane	0.5	2
Chloroethane	0.5	2
Chloroform	0.5	2
Dichlorobromomethane	0.5	2
1,1 Dichloroethane	0.5	1
1,2 Dichloroethane	0.5	2
1,1 Dichloroethylene	0.5	2
1,2 Dichloropropane	0.5	1
1,3 Dichloropropylene (volatile)	0.5	2
Ethylbenzene	0.5	2
Methyl Bromide (*Bromomethane*)	1.0	2
Methyl Chloride (*Chloromethane*)	0.5	2
Methylene Chloride (*Dichloromethane*)	0.5	2
1,1,2,2 Tetrachloroethane	0.5	1
Tetrachloroethylene	0.5	2
Toluene	0.5	2
trans-1,2 Dichloroethylene	0.5	1
1,1,1 Trichloroethane	0.5	2
1,1,2 Trichloroethane	0.5	2
Trichloroethylene	0.5	2
Vinyl Chloride	0.5	2
1,2 Dichlorobenzene (volatile)	0.5	2
1,3 Dichlorobenzene (volatile)	0.5	2
1,4 Dichlorobenzene (volatile)	0.5	2

Selection and Use of Appropriate ML Value:

ML Selection: When there is more than one ML value for a given substance, the discharger may select any one of those ML values, and their associated analytical methods, listed in this Attachment that are below the calculated effluent limitation for compliance determination. If no ML value is below the effluent limitation, then the discharger shall select the lowest ML value, and its associated analytical method, listed in the PQL Table.

ML Usage: The ML value in this Attachment represents the lowest quantifiable concentration in a sample based on the proper application of all method-based analytical procedures and the absence of any matrix interferences. Assuming that all method-specific analytical steps are followed, the ML value will also represent, after the appropriate application of method-specific factors, the lowest standard in the calibration curve for that specific analytical technique. Common analytical practices sometimes require different treatment of the sample relative to calibration standards.

Note: chemical names in parenthesis and italicized is another name for the constituent.

---

1 *The normal method-specific factor for these substances is 1, therefore, the lowest standard concentration in the calibration curve is equal to the above ML value for each substance.*

MINIMUM LEVELS IN PPB (µg/l)

Table 2 – Semi-Volatile Substances[2]	GC	GCMS	LC
2-Chloroethyl vinyl ether	1	1	
2 Chlorophenol	2	5	
2,4 Dichlorophenol	1	5	
2,4 Dimethylphenol	1	2	
4,6 Dinitro-2-methylphenol	10	5	
2,4 Dinitrophenol	5	5	
2- Nitrophenol		10	
4- Nitrophenol	5	10	
4 Chloro-3-methylphenol	5	1	
2,4,6 Trichlorophenol	10	10	
Acenaphthene	1	1	0.5
Acenaphthylene		10	0.2
Anthracene		10	2
Benzidine		5	
Benzo (a) Anthracene (*1,2 Benzanthracene*)	10	5	
Benzo(a) pyrene (*3,4 Benzopyrene*)		10	2
Benzo (b) Flouranthene (*3,4 Benzofluoranthene*)		10	10
Benzo(g,h,i)perylene		5	0.1
Benzo(k)fluoranthene		10	2
bis 2-(1-Chloroethoxyl) methane		5	
bis(2-chloroethyl) ether	10	1	
bis(2-Chloroisopropyl) ether	10	2	
bis(2-Ethylhexyl) phthalate	10	5	
4-Bromophenyl phenyl ether	10	5	
Butyl benzyl phthalate	10	10	
2-Chloronaphthalene		10	
4-Chlorophenyl phenyl ether		5	
Chrysene		10	5
Dibenzo(a,h)-anthracene		10	0.1
1,2 Dichlorobenzene (semivolatile)	2	2	
1,3 Dichlorobenzene (semivolatile)	2	1	
1,4 Dichlorobenzene (semivolatile)	2	1	
3,3' Dichlorobenzidine		5	
Diethyl phthalate	10	2	
Dimethyl phthalate	10	2	
di-n-Butyl phthalate		10	
2,4 Dinitrotoluene	10	5	
2,6 Dinitrotoluene		5	
di-n-Octyl phthalate		10	
1,2 Diphenylhydrazine		1	
Fluoranthene	10	1	0.05
Fluorene		10	0.1
Hexachloro-cyclopentadiene	5	5	
1,2,4 Trichlorobenzene	1	5	

MINIMUM LEVELS IN PPB (µg/l)

Table 2 - SEMI-VOLATILE SUBSTANCES[2]	GC	GCMS	LC	COLOR
Pentachlorophenol	1	5		
Phenol [3]	1	1		50
Hexachlorobenzene	5	1		
Hexachlorobutadiene	5	1		
Hexachloroethane	5	1		
Indeno(1,2,3,cd)-pyrene		10	0.05	
Isophorone	10	1		
Naphthalene	10	1	0.2	
Nitrobenzene	10	1		
N-Nitroso-dimethyl amine	10	5		
N-Nitroso -di n-propyl amine	10	5		
N-Nitroso diphenyl amine	10	1		
Phenanthrene		5	0.05	
Pyrene		10	0.05	

Table 3– INORGANICS[4]	FAA	GFAA	ICP	ICPMS	SPGFAA	HYDRIDE	CVAA	COLOR	DCP
Antimony	10	5	50	0.5	5	0.5			1000
Arsenic		2	10	2	2	1		20	1000
Beryllium	20	0.5	2	0.5	1				1000
Cadmium	10	0.5	10	0.25	0.5				1000
Chromium (total)	50	2	10	0.5	1				1000
Chromium VI	5							10	
Copper	25	5	10	0.5	2				1000
Lead	20	5	5	0.5	2				10000
Mercury				0.5			0.2		
Nickel	50	5	20	1	5				1000
Selenium		5	10	2	5	1			1000
Silver	10	1	10	0.25	2				1000
Thallium	10	2	10	1	5				1000
Zinc	20		20	1	10				1000
Cyanide								5	

2 *With the exception of phenol by colorimetric technique, the normal method-specific factor for these substances is 1000, therefore, the lowest standards concentration in the calibration curve is equal to the above ML value for each substance multiplied by 1000.*

3 *Phenol by colorimetric technique has a factor of 1.*

4 *The normal method-specific factor for these substances is 1, therefore, the lowest standard concentration in the calibration curve is equal to the above ML value for each substance.*

MINIMUM LEVELS IN PPB (µg/l)

Table 4- PESTICIDES – PCBs[5]	GC
Aldrin	0.005
alpha–BHC (*a-Hexachloro-cyclohexane*)	0.01
beta–BHC (*b-Hexachloro-cyclohexane*)	0.005
Gamma–BHC (*Lindane; g-Hexachloro-cyclohexane*)	0.02
Delta-BHC (*d-Hexachloro-cyclohexane*)	0.005
Chlordane	0.1
4,4'-DDT	0.01
4,4'-DDE	0.05
4,4'-DDD	0.05
Dieldrin	0.01
Alpha-Endosulfan	0.02
Beta-Endosulfan	0.01
Endosulfan Sulfate	0.05
Endrin	0.01
Endrin Aldehyde	0.01
Heptachlor	0.01
Heptachlor Epoxide	0.01
PCB 1016	0.5
PCB 1221	0.5
PCB 1232	0.5
PCB 1242	0.5
PCB 1248	0.5
PCB 1254	0.5
PCB 1260	0.5
Toxaphene	0.5

Techniques:
GC - Gas Chromatography
GCMS - Gas Chromatography/Mass Spectrometry
HRGCMS - High Resolution Gas Chromatography/Mass Spectrometry (i.e., EPA 1613, 1624, or 1625)
LC - High Pressure Liquid Chromatography
FAA - Flame Atomic Absorption
GFAA - Graphite Furnace Atomic Absorption
HYDRIDE - Gaseous Hydride Atomic Absorption
CVAA - Cold Vapor Atomic Absorption
ICP - Inductively Coupled Plasma
ICPMS - Inductively Coupled Plasma/Mass Spectrometry
SPGFAA - Stabilized Platform Graphite Furnace Atomic Absorption (i.e., EPA 200.9)
DCP - Direct Current Plasma
COLOR - Colorimetric

5 *The normal method-specific factor for these substances is 100, therefore, the lowest standard concentration in the calibration curve is equal to the above ML value for each substance multiplied by 100.*

ATTACHMENT I – TRIGGERS FOR MONITORING PRIORITY POLLUTANTS

	CONSTITUENT	µg/L
1	Antimony	7
2	Arsenic	75
3	Beryllium	--
4	Cadmium	6.06
5a	Chromium III	233
5b	Chromium VI	5.7
6	Copper	27.2
7	Lead	22.2
8	Mercury	0.026
9	Nickel	60
10	Selenium	2.5
11	Silver	11.2
12	Thallium	3.2
13	Zinc	139
14	Cyanide	2.6
15	Asbestos	--
16	2,3,7,8-TCDD (Dioxin)	0.000000007
17	Acrolein	160
18	Acrylonitrile	0.03
19	Benzene	0.6
20	Bromoform	2.2
21	Carbon Tetrachloride	0.13
22	Chlorobenzene	340
23	Chlorodibromomethane	0.22
24	Chloroethane	--
25	2-Chloroethyl vinyl ether	--
26	Chloroform	--
27	Dichlorobromomethane	0.28
28	***1,1-Dichloroethane***	***5***
29	1,2-Dichloroethane	0.19
30	1,1-Dichloroethylene	0.029
31	1,2-Dichloropropane	0.26
32	1,3-Dichloropropylene	5
33	***Ethylbenzene***	***0.3***
34	Methyl Bromide	24
35	Methyl Chloride	--
36	Methylene Chloride	2.4
37	1,1,2,2-Tetratchloroethane	0.085

	CONSTITUENT	µg/L
38	Tetratchloroethylene	0.4
39	***Toluene***	***0.15***
40	***1,2,-Trans-dichloroethylene***	***10***
41	***1,1,1-Trichloroethane***	***200***
42	1,1,2-Trichloroethane	0.3
43	Trichloroethylene	1.35
44	***Vinyl Chloride***	***0.5***
45	2-Chlorophenol	60
46	2,4-Dichlorophenol	46.5
47	2,4-Dimethylphenol	270
48	2-Methy-4,6-Dinitrophenol	6.7
49	2,4-Dinitrophenol	35
50	2-Nitrophenol	--
51	4-Nitrophenol	--
52	3-Methyl-4-Chlorophenol	--
53	Pentachlorophenol	0.14
54	Phenol	10500
55	2,4,6-Trichlorophenol	1.05
56	Acenapthene	600
57	Acenapthylene	--
58	Anthracene	4800
59	Benzidine	0.00006
60	Benzo (a) anthracene	0.0022
61	Benzo (a) pyrene	0.0022
62	Benzo (b) fluoranthene	0.0022
63	Benzo (g,h,i) pyrylene	--
64	Benzo (k) fluorantene	0.0022
65	Bis (2-Chloroethoxy) methane	--
66	Bis (2-Chloroethyl) ether	0.016
67	Bis (2-Chloroisopropyl) ether	700
68	Bis (2-ethyhexyl) phthalate	0.9
69	4-Bromophenyl phenyl ether	--
70	Butyl benzyl phthalate	1500
71	2- Chloronapthalene	850
72	4-Chlrorphenyl phenyl ether	--
73	Chrysene	0.0022
74	Dibenzo (a,h) anthracene	0.0022
75	***1,2-Dichlorobenzene***	***0.6***

See notes below for italicized constituents.

ATTACHMENT I. -Continued

	CONSTITUENT	µg/L
76	1,3-Dichlorobenzene	200
77	***1,4-Dichlorobenzene***	***5***
78	3,3-Dichlorobenzidine	0.02
79	Diethyl phthalate	11,500
80	Dimethyl phthalate	156,500
81	Di-N-butyl phthalate	1,350
82	2,4-Dinitrotoluene	0.055
83	2,6-Dinitrotoluene	--
84	Di-N-octyl phthalate	--
85	1,2-Diphenylhydrazine	0.02
86	Fluoranthene	150
87	Fluorene	650
88	Hexachlorobenzene	0.00038
89	Hexachlorobutadiene	0.22
90	***Hexachlorocyclopentadiene***	***50***
91	Hexachloroethane	0.95
92	Indeno (1,2,3-cd) pyrene	0.0022
93	Isophorone	4.2
94	***Naphthalene***	***17***
95	Nitrobenzene	8.5
96	N-Nitrosodimethylamine	0.00035
97	N-Nitrosodi-N-propylamine	0.0025
98	N-Nitrosodiphenylamine	2.5
99	Phenantrene	--

	CONSTITUENT	µg/L
100	Pyrene	480
101	***1,2,4 -Trichlorobenzene***	***5***
102	Aldrin	0.00007
103	BHC Alpha	0.0020
104	BHC Beta	0.007
105	BHC Gamma	0.010
106	BHC Delta	--
107	Chlordane	0.00029
108	4,4-DDT	0.0003
109	4,4-DDE	0.0003
110	4,4-DDD	0.00042
111	Dieldrin	0.00007
112	Endosulfan Alpha	0.028
113	Endosulfan Beta	0.028
114	Endosulfan Sulfate	55
115	Endrin	0.018
116	Endrin Aldehyde	0.38
117	Heptachlor	0.00011
118	Heptachlor Epoxide	0.00005
119	PCB 1016	0.000085
120	PCB 1221	0.000085
125	PCB 1260	0.000085
126	Toxaphene	0.00037

Notes:

1. For constituents not shown italicized, the values shown in the Table are fifty percent of the most stringent applicable receiving water objectives (freshwater or human health (consumption of water and organisms) as specified for that pollutant in 40 CFR 131.38[1]).
2. For constituents shown bold and italicized, the values shown in the Table are based on the California Department of Health Services maximum contaminant levels (MCLs) or Notification Level. Notification Level based trigger is underlined.
3. For hardness dependent metals, the hardness value used is 270 mg/L and for pentachlorophenol, the pH value used is 7.5 standard units.

[1] *See Federal Register/ Vol. 65, No. 97 / Thursday, May 18, 2000 / Rules and Regulations.*