TO ALL INTERESTED PERSONS AND AGENCIES:

TENTATIVE WASTE DISCHARGE REQUIREMENTS AND NATIONAL POLLUTANT DISCHARGE ELIMINATION SYSTEM PERMIT FOR AMEEDEE GEOTHERMAL VENTURE I, AMEDEE GEOTHERMAL POWER PLANT, LASSEN COUNTY (WDID 6A188410000)

Please see the Tentative Waste Discharge Requirements and National Pollutant Discharge Elimination System (NPDES) Permit (enclosed) for Amedee Geothermal Venture I, Amedee Geothermal Power Plant. The California Regional Water Quality Control Board, Lahontan Region (Water Board) is considering renewing the NPDES Permit. The Water Board regulates the discharges from the geothermal power plant to surface waters. The geothermal power plant has been operating and discharging for over 20 years and the renewed permit will allow the discharge to continue.

The Water Board requests you review the Tentative NPDES Permit and provide your written comments no later than **May 29, 2014** to this office at 2501 Lake Tahoe Blvd. South Lake Tahoe, CA 96151. Comments received after that date may not be considered in preparation for the final proposed Order to be presented to the Water Board for consideration at the public meeting to be held on **July 16 & 17, 2014**, at the Water Board's Annex hearing room located at 971 Silver Dollar Avenue in South Lake Tahoe.

Approximately 10 to 15 days prior to each meeting, the Water Board publishes its agenda on the Internet at http://www.waterboards.ca.gov/lahontan.
If you prefer to receive a hard copy of the Water Board meeting agenda, or have questions regarding this matter, please contact Rob Tucker at (530) 542-5467.

Robert Tucker
Water Resources Control Engineer

Enclosures: Tentative Board Order

RTT/dk/T: Ameedee Tentative Cover Letter

CALIFORNIA REGIONAL WATER QUALITY CONTROL BOARD
LAHONTAN REGION

2501 Lake Tahoe Boulevard, South Lake Tahoe, CA 96150
(530) 542-5400 • Fax (530) 544-2271
http://www.waterboards.ca.gov/lahontan

ORDER R6T-2014-Tentative
NPDES NO. CA0103055

WASTE DISCHARGE REQUIREMENTS FOR THE AMEDEE GEOTHERMAL VENTURE I, AMEDEE GEOTHERMAL POWER PLANT

The following Discharger is subject to waste discharge requirements (WDRs) set forth in this Order:

Table 1. Discharger Information

Discharger	Amedee Geothermal Venture I
Name of Facility	Amedee Geothermal Power Plant
Facility Address	Amedee Hot Springs, Section 8, T28N, R16, MDB&M
	Amedee, California
	Lassen County

Table 2. Discharge Location

Discharge Point	Effluent Description	Discharge Point Latitude (North)	Discharge Point Longitude (West)	Receiving Water
001	Spent Geothermal Fluids	40˚ 18’ 2.05” N	120˚ 11’ 43.41” W	Amedee Hot Springs

Table 3. Administrative Information

This Order was adopted on:	July 16 or 17, 2014
This Order shall become effective on:	Sept 1, 2014
This Order shall expire on:	August 31, 2019
The Discharger shall file a Report of Waste Discharge as an application for reissuance of WDRs in accordance with title 23, California Code of Regulations, and an application for reissuance of a National Pollutant Discharge Elimination System (NPDES) permit no later than:	180 days prior to the Order expiration date
The U.S. Environmental Protection Agency (USEPA) and the California Regional Water Quality Control Board, Lahontan Region have classified this discharge as follows:	Minor

I, Patty Kouyoumdjian, Executive Officer, do hereby certify that this Order with all attachments is a full, true, and correct copy of the Order adopted by the California Regional Water Quality Control Board, Lahontan Region, on the date indicated above.

_____
Patty Kouyoumdjian, Executive Officer

Contents

I. Facility Information ... 3
II. Findings ... 3
III. Discharge Prohibitions ... 4
IV. Effluent Limitations and Discharge Specifications ... 4
A. Effluent Limitations – Discharge Point 001 ... 4
1. Final Effluent Limitations – Discharge Point 001 ... 4
2. Interim Effluent Limitations – Not Applicable ... 5
B. Land Discharge Specifications – Not Applicable ... 5
C. Recycling Specifications – Not Applicable ... 5
V. Receiving Water Limitations ... 5
A. Surface Water Limitations ... 5
B. Groundwater Limitations ... 7
VI. Provisions ... 8
A. Standard Provisions ... 8
B. Monitoring and Reporting Program (MRP) Requirements ... 10
C. Special Provisions ... 10
1. Reopener Provisions ... 10
2. Special Studies, Technical Reports and Additional Monitoring Requirements – Not Applicable ... 10
3. Best Management Practices and Pollution Prevention ... 11
4. Construction, Operation and Maintenance Specifications – Not Applicable ... 11
5. Special Provisions for Municipal Facilities (POTWs Only) – Not Applicable ... 11
6. Other Special Provisions – Not Applicable ... 11
7. Compliance Schedules – Not Applicable ... 11
VII. Compliance Determination – Not Applicable ... 11

Tables

Table 1. Discharger Information ... 1
Table 2. Discharge Location ... 1
Table 3. Administrative Information ... 1
Table 4. Final Effluent Limitations ... 4

Attachments

Attachment A – Definitions ... A-1
Attachment B – Map ... B-1
Attachment C – Flow Schematic ... C-1
Attachment D – Standard Provisions ... D-1
Attachment E – Monitoring and Reporting Program ... E-1
Attachment F – Fact Sheet ... F-1
Attachment G – Best Management Practices Plan Requirements ... G-1

I. FACILITY INFORMATION

Information describing the Amedee Geothermal Power Plant (Facility) is summarized in Table 1 and in sections I and II of the Fact Sheet (Attachment F). Section I of the Fact Sheet also includes information regarding the Facility's permit application.

II. FINDINGS

The California Regional Water Quality Control Board, Lahontan Region (Lahontan Water Board), finds:

A. Legal Authorities. This Order serves as WDRs pursuant to article 4, chapter 4, division 7 of the California Water Code (commencing with section 13260).This Order is also issued pursuant to section 402 of the federal Clean Water Act (CWA) and implementing regulations adopted by the USEPA and chapter 5.5, division 7 of the Water Code (commencing with section 13370). It shall serve as an NPDES permit for point source discharges from this facility to surface waters.

B. Background and Rationale for Requirements. The Lahontan Water Board developed the requirements in this Order based on information submitted as part of the application, through monitoring and reporting programs, and other available information. The Fact Sheet (Attachment F), which contains background information and rationale for the requirements in this Order, is hereby incorporated into and constitutes Findings for this Order. Attachments A through E and G are also incorporated into this Order.

C. Provisions and Requirements Implementing State Law. The provisions/requirements in subsections IV.B, IV.C, and V.B are included to implement state law only. These provisions/requirements are not required or authorized under the federal CWA; consequently, violations of these provisions/requirements are not subject to the enforcement remedies that are available for NPDES violations.

D. Notification of Interested Parties. The Lahontan Water Board has notified the Discharger and interested agencies and persons of its intent to prescribe WDRs for the discharge and has provided them with an opportunity to submit their written comments and recommendations. Details of the notification are provided in the Fact Sheet.

E. Consideration of Public Comment. The Lahontan Water Board, in a public meeting, heard and considered all comments pertaining to the discharge. Details of the public meeting are provided in the Fact Sheet.

THEREFORE, IT IS HEREBY ORDERED that this Order supersedes Order R6T-2009-0007 except for enforcement purposes, and, in order to meet the provisions contained in division 7 of the Water Code (commencing with section 13000) and regulations adopted thereunder, and the provisions of the CWA and regulations and guidelines adopted thereunder, the Discharger shall comply with the requirements in this Order. This action in no way prevents the Lahontan Water Board from taking enforcement action for past violations of Order R6T-2009-0007.

III. DISCHARGE PROHIBITIONS

A. In accordance with the Region-wide and Unit/Area-Specific Prohibitions in section 4.1 of the Basin Plan:

1. The discharge of waste[1] that causes violation of any numeric water quality objective contained in the Basin Plan, including the Nondegradation Objective, is prohibited.

2. The discharge of waste that causes violation of any numeric water quality objective contained in the Basin Plan is prohibited.

3. Where any numeric or narrative water quality objective contained in the Basin Plan is already being violated, the discharge of waste that causes further degradation or pollution is prohibited.

4. The discharge of untreated sewage, garbage, or other solid wastes, or industrial wastes into surface waters of the Region is prohibited.

5. For industrial discharges[2]

a. The discharge, bypass, or diversion of raw or partially treated sewage, sludge, grease, or oils to surface waters is prohibited.

b. The discharge of wastewater except to the designated disposal site (as designated in waste discharge requirements) is prohibited.

c. The discharge of cuttings from well drilling operations and fluids from well testing are prohibited unless authorized subsequent to the Discharger meeting the General Discharge Limitations contained in Section 4.7 of the Basin Plan.

IV. EFFLUENT LIMITATIONS AND DISCHARGE SPECIFICATIONS

A. Effluent Limitations – Discharge Point 001

1. Final Effluent Limitations – Discharge Point 001

a. The Discharger shall maintain compliance with the following effluent limitations at Discharge Point 001, with compliance measured at Monitoring Location EFF-001 as described in the Monitoring and Reporting Program, Attachment E:

Table 4. Final Effluent Limitations

Parameter	Units	Effluent Limitations	
		Average Monthly	Maximum Daily
Arsenic, Total Recoverable	µg/L	--	203
Boron, Total Recoverable	µg/L	--	3,934
Mercury, Total Recoverable	µg/L	--	0.6
Molybdenum, Total Recoverable	µg/L	--	69

[1] "Waste" is defined to include any waste or deleterious material including, but not limited to, waste earthen materials (such as soil, silt, sand, clay, rock, or other organic or mineral material) and any other waste as defined in Water Code section 13050 subdivision (d).

[2] "Industry" is defined in Section 4.7 of the Basin Plan as "…any servicing, producing, manufacturing or processing operation of whatever nature, including, but not limited to: mining, gravel washing, geothermal operations, air conditioning, ship building and repairing, oil production, storage and disposal operations, or water well pumping."

2. Interim Effluent Limitations – Not Applicable

B. Land Discharge Specifications – Not Applicable

C. Recycling Specifications – Not Applicable

V. RECEIVING WATER LIMITATIONS

Receiving water limitations are based on water quality objectives contained in the Basin Plan and are a required part of this Order. The discharge shall not cause the following in Amedee Hot Springs:

A. Surface Water Limitations

1. This Discharger shall not cause a violation of any applicable water quality standard for receiving water adopted by the Lahontan Water Board or the State Water Board as required by the federal Water Pollution Control Act and regulations adopted thereunder. If more stringent applicable water quality standards are promulgated or approved pursuant to section 303 of the federal Clean Water Act or amendments thereto, the Lahontan Water Board may revise and modify this Order in accordance with such more stringent standards.

2. **Ammonia.** The neutral, unionized ammonia species (NH_3) is highly toxic to freshwater fish. The fraction of toxic NH3 to total ammonia species ($NH_4^+ + NH_3$) is a function of temperature and pH. Basin Plan Tables 5.1-5 to 5.1-6 were derived from USEPA ammonia criteria for freshwater. Ammonia concentrations shall not exceed the values listed for the corresponding conditions in these tables. For temperature and pH values not explicitly in the tables, the most conservative value neighboring the actual value may be used or criteria can be calculated from numerical formulas developed by the USEPA.

3. **Bacteria, Coliform.** Waters shall not contain concentrations of coliform organisms attributable to anthropogenic sources, including human and livestock wastes. The fecal coliform concentration during any 30-day period shall not exceed a log mean of 20 MPN/100 ml, nor shall more than 10 percent of all samples collected during any 30-day period exceed 40 MPN/100 ml. The USEPA recommends that the log mean should ideally be based on a minimum of not less than five samples collected as evenly spaced as practicable during any 30-day period. [Reference: Ambient Water Quality Criteria for Bacteria - 1986, EPA 440/5-84-002, page 2.] However, a log mean concentration exceeding 20 MPN/100 ml for any 30-day period shall indicate violation of this objective even if fewer than five samples were collected.

4. **Biostimulatory Substances.** Waters shall not contain biostimulatory substances in concentrations that promote aquatic growths to the extent that such growths cause nuisance or adversely affect the water for beneficial uses.

5. **Chemical Constituents.** Waters designated as AGR shall not contain concentrations of chemical constituents in amounts that adversely affect the water for beneficial uses (i.e., agricultural purposes). Waters shall not contain concentrations of chemical constituents in amounts that adversely affect the water for beneficial uses.

6. **Chlorine, Total Residual.** For the protection of aquatic life, total chlorine residual shall not exceed either a median value of 0.002 mg/L or a maximum value of 0.003 mg/L. Median values shall be based on daily measurements taken within a 6-month period.

7. **Color.** Waters shall be free of coloration that causes nuisance or adversely affects the water for beneficial uses.

8. **Dissolved Oxygen.** The dissolved oxygen concentration, as percent saturation, shall not be depressed by more than 10 percent, nor shall the minimum dissolved oxygen

concentration be less than 80 percent of saturation. For waters with the beneficial uses of COLD and COLD with SPWN, the minimum dissolved oxygen concentration shall not be less than that specified in Table 5.1-8 in the Basin Plan.

9. **Floating Materials.** Waters shall not contain floating materials, including solids, liquids, foams, and scum, in concentrations that cause nuisance or adversely affect the water for beneficial uses. For natural high quality waters, the concentrations of floating material shall not be altered to the extent that such alterations are discernible at the 10 percent significance level.

10. **Oil and Grease.** Waters shall not contain oils, greases, waxes or other materials in concentrations that result in a visible film or coating on the surface of the water or on objects in the water, that cause nuisance, or that otherwise adversely affect the water for beneficial uses. For natural high quality waters, the concentration of oils, greases, or other film or coat generating substances shall not be altered.

11. **Nondegradation of Aquatic Communities and Populations.** All wetlands shall be free of substances attributable to wastewater or other discharges that produce adverse physiological responses in humans, animals, or plants; or which lead to the presence of undesirable or nuisance aquatic life. All wetlands shall be free from activities that would substantially impair the biological community as it naturally occurs due to physical, chemical and hydrologic processes.

12. **Pesticides.** For the purposes of this Basin Plan, pesticides are defined to include insecticides, herbicides, rodenticides, fungicides, piscicides and all other economic poisons. An economic poison is any substance intended to prevent, repel, destroy, or mitigate the damage from insects, rodents, predatory animals, bacteria, fungi or weeds capable of infesting or harming vegetation, humans, or animals (CA Agriculture Code 12753).

    Pesticide concentrations, individually or collectively, shall not exceed the lowest detectable levels, using the most recent detection procedures available. There shall not be an increase in pesticide concentrations found in bottom sediments. There shall be no detectable increase in bioaccumulation of pesticides in aquatic life.

13. **pH.** Changes in normal ambient pH levels shall not exceed 0.5 pH units. The pH shall not be depressed below 6.5 nor raised above 8.5.

    The Regional Water Board recognizes that some waters of the Region may have natural pH levels outside of the 6.5 to 8.5 range. Compliance with the pH objective for these waters will be determined on a case-by-case basis.

14. **Radioactivity.** Radionuclides shall not be present in concentrations which are deleterious to human, plant, animal, or aquatic life or which result in the accumulation of radionuclides in the food web to an extent which presents a hazard to human, plant, animal, or aquatic life.

15. **Sediment.** The suspended sediment load and suspended sediment discharge rate of surface waters shall not be altered in such a manner as to cause nuisance or adversely affect the water for beneficial uses.

16. **Settleable Materials.** Waters shall not contain substances in concentrations that result in deposition of material that causes nuisance or that adversely affects the water for beneficial uses. For natural high quality waters, the concentration of settleable materials shall not be raised by more than 0.1 ml/L.

17. **Suspended Material.** Waters shall not contain suspended materials in concentrations that cause nuisance or that adversely affect the water for beneficial uses. For natural high quality waters, the concentration of total suspended materials shall not be altered to the extent that such alterations are discernible at the 10 percent significance level.

18. **Taste and Odor.** Waters shall not contain taste or odor-producing substances in concentrations that impart undesirable tastes or odors to fish or other edible products of aquatic origin, that cause nuisance, or that adversely affect the water for beneficial uses. For naturally high quality waters, the taste and odor shall not be altered.

19. **Temperature.** The natural receiving water temperature of all waters shall not be altered unless it can be demonstrated to the satisfaction of the Lahontan Water Board that such an alteration in temperature does not adversely affect the water for beneficial uses. For waters designated WARM, water temperature shall not be altered by more than 5 degrees Fahrenheit (5°F) above or below the natural temperature. For waters designated COLD, the temperature shall not be altered.

20. **Toxicity.** All waters shall be maintained free of toxic substances in concentrations that are toxic to, or that produce detrimental physiological responses in human, plant, animal, or aquatic life. Compliance with this objective will be determined by use of indicator organisms; analyses of species diversity, population density, growth anomalies, bioassays of appropriate duration and/or other appropriate methods as specified by the Water Board.

    The survival of aquatic life in surface waters subjected to a waste discharge, or other controllable water quality factors, shall not be less than that for the same water body in areas unaffected by the waste discharge, or when necessary, for other control water that is consistent with the requirements for "experimental water" as defined in *Standard Methods for the Examination of Water and Wastewater* (American Public Health Association, et al. 1998).

21. **Turbidity.** Waters shall be free of changes in turbidity that cause nuisance or adversely affect the water for beneficial uses. Increases in turbidity shall not exceed natural levels by more than 10 percent.

B. Groundwater Limitations

1. **Bacteria, Coliform.** In ground waters designated as MUN, the median concentration of coliform organisms over any seven-day period shall be less than 1.1/100 milliliters.

2. **Chemical Constituents.** Ground waters designated as MUN shall not contain concentrations of chemical constituents in excess of the MCL or SMCL based upon drinking water standards specified in the following provisions of Title 22 of the California Code of Regulations which are incorporated by reference into this plan: Table 64431-A of Section 64431 (Inorganic Chemicals), Table 64431-B of Section 64431 (Fluoride), Table 64444-A of Section 64444 (Organic Chemicals), Table 64449-A of Section 64449 (Secondary Maximum Contaminant Levels-Consumer Acceptance Limits), and Table 64449-B of Section 64449 (Secondary Maximum Contaminant Levels-Ranges). This incorporation-by-reference is prospective including future changes to the incorporated provisions as the changes take effect.

   Ground waters designated as AGR shall not contain concentrations of chemical constituents in amounts that adversely affect the water for beneficial uses (i.e., agricultural purposes). Ground waters shall not contain concentrations of chemical constituents that adversely affect the water for beneficial uses.

3. **Radioactivity.** Ground waters designated as MUN shall not contain concentrations of radionuclides in excess of the limits specified in Table 4 of Section 64443 (Radioactivity) of Title 22 of the California Code of Regulations. This incorporation-by-reference is prospective including future changes to the incorporated provisions as the changes take effect.

4. **Taste and Odor.** Ground waters shall not contain taste or odor-producing substances in concentrations that cause nuisance or that adversely affect beneficial uses. For ground waters designated as MUN, at a minimum, concentrations shall not exceed adopted secondary maximum contaminant levels specified in Table 64449-A of Section 64449 (Secondary Maximum Contaminant Levels-Consumer Acceptance Limits), and Table 64449-B of Section 64449 (Secondary Maximum Contaminant Levels-Ranges) of Title 22 of the California Code of Regulations. This incorporation-by-reference is prospective including future changes to the incorporated provisions as the changes take effect.

VI. PROVISIONS

A. Standard Provisions

1. The Discharger shall comply with all Standard Provisions included in Attachment D.

2. The Discharger shall comply with the following provisions. In the event that there is any conflict, duplication, or overlap between provisions specified by this Order, the more stringent provision shall apply:

   a. Surface waters as used in this Order include, but are not limited to, wetlands and live streams, either perennial or ephemeral, which flow in natural or artificial watercourses, and natural lakes and artificial impoundments of waters within the State of California.

   b. Ground waters as used in this Order include, but are not limited to, all subsurface waters being above atmospheric pressure, and the capillary fringe of these waters.

   c. The requirements prescribed herein do not authorize the commission of any act causing injury to the property of another, nor protect the Discharger from liabilities under federal, state, or local laws, nor guarantee the Discharger a capacity right in the receiving waters.

   d. All discharges authorized by this Order shall be consistent with the terms and conditions of this Order. The discharge of any pollutant more frequently than or at a level in excess of that identified and authorized by this Order shall constitute a violation of the terms and conditions of this Order.

   e. Failure to comply with this permit may constitute a violation of the Water Code and or the CWA, and is grounds for enforcement action or for permit termination, revocation and re-issuance, or modification.

   f. The Discharger shall take all reasonable steps to minimize or prevent any discharge in violation of this permit that has a reasonable likelihood of adversely affecting human health or the environment.

   g. The Water Code and the CWA provide for civil liability and criminal penalties for violations of the permit limits including imposition of civil liability or referral to the Attorney General.

   h. A copy of the NPDES permit shall be kept and maintained by the Discharger and be available at all times to operating personnel.

i. Provisions of the permit are severable. If any provision of the requirements is found invalid, the remainder of the requirements shall not be affected.

j. Pursuant to Water Code section 13263, subdivision (g), no discharge of waste into the waters of the state, whether or not the discharge is made pursuant to waste discharge requirements, shall create a vested right to continue the discharge. All discharges of waste into waters of the state are privileges, not rights.

k. In the event the Discharger is unable to comply with any of the conditions of this Order due to:

i. breakdown or serious malfunction of water treatment equipment;

ii. accidents caused by human error or negligence;

iii. overflows from the system; and

iv. other causes such as acts of nature.

The Discharger shall notify the Lahontan Water Board Executive Officer as soon as the Discharger or the Discharger's agents have knowledge of any discharge in violation of this permit, or any emergency discharge or other discharge of water to Honey Lake or the surrounding wetland, in accordance with the notification requirements in the Standard Provisions for NPDES Permits, included in this Order as Attachment D.

l. Pursuant to Water Code section 13267, subdivision (b), the Discharger shall notify the Water Board of any substantial change in the volume or character of pollutants introduced into the Facility from the conditions existing at the time of adoption of this NPDES permit.

m. Adequate notice shall include information on the quality and quantity of effluent discharged into the receiving waters for the Facility, as well as any anticipated impact of the change on the quantity or quality of the effluent to be discharged from the Facility. A substantial change in volume is considered an increase in excess of ten percent of the mean daily flow rate. The Discharger shall forward a copy of such notice directly to the USEPA Regional Administrator.

n. The Discharger shall file a report of waste discharge with the Water Board at least 180 days before making any material change or proposed change in the character, location, or volume of the discharge.

o. Pursuant to Water Code section 13260, subdivision (c), any change in the ownership and/or operation of property subject to the NPDES permit shall be reported to the Water Board. Notification of applicable NPDES Permit requirements shall be furnished in writing to the new owners and/or operators, and a copy of such notification shall be sent to the Water Board.

p. If a Discharger becomes aware that any information submitted to the Water Board is incorrect, the Discharger shall immediately notify the Water Board, in writing, and correct that information.

q. If the Discharger becomes aware that their NPDES permit is no longer needed (because the discharge will cease) the Discharger shall notify the Water Board in writing and request that the permit be rescinded.

r. Failure to comply with provisions or requirements of this Order, or violation of other applicable laws or regulations governing discharges from this facility, may subject the Discharger to administrative or civil liabilities, criminal penalties, and/or other

enforcement remedies to ensure compliance. Additionally, certain violations may subject the Discharger to civil or criminal enforcement from appropriate local, state, or federal law enforcement entities.

s. In the event the Discharger does not comply or will be unable to comply for any reason, with any prohibition, maximum daily effluent limitation, average monthly effluent limitation, or receiving water limitation of this Order, the Discharger shall notify the Lahontan Water Board by telephone (530) 542-5400 within 24 hours of having knowledge of such noncompliance, and shall confirm this notification in writing within five days, unless the Lahontan Water Board waives confirmation. The written notification shall state the nature, time, duration, and cause of noncompliance, and shall describe the measures being taken to remedy the current noncompliance and prevent recurrence including, where applicable, a schedule of implementation. Other noncompliance requires written notification as above at the time of the normal monitoring report.

B. Monitoring and Reporting Program (MRP) Requirements

The Discharger shall comply with the MRP and future revisions thereto, in Attachment E.

C. Special Provisions

1. Reopener Provisions

a. If more stringent applicable water quality standards are promulgated or approved pursuant to Section 303 of the Federal Water Pollution Control Act or amendments thereto, the Regional Water Board may revise and modify this Order in accordance with such more stringent standards.

b. The Lahontan Water Board may reopen this Order to establish new conditions or effluent limitations should monitoring data, toxicity testing data, or other new information indicate that a constituent is discharged at a level that will do any of the following:

i. cause, have reasonable potential to cause, or contribute to an in-stream excursion above any water quality criteria or objective, or

ii. cause, have reasonable potential to cause, or contribute to a violation of any narrative water quality objective contained in the Basin Plan.

2. Special Studies, Technical Reports and Additional Monitoring Requirements – Not Applicable

a. **Chronic Toxicity Evaluation Study.** The Discharger shall develop and implement a chronic toxicity evaluation study as a means to identify the source of the toxicity in the discharge from Discharge Point 001. The focus of the study should be on whether the pollutant characteristics of the intake water (i.e., geothermal fluid) used by the Facility are the cause of the chronic toxicity and to verify that Facility operations are not contributing to the toxicity. The study shall characterize the quality of the intake water and wastewater discharge. At a minimum, the study should provide the results of concurrent chronic toxicity tests on both the Facility influent and effluent, as well as evaluate the possible contribution arsenic, boron, copper, lead, mercury, molybdenum, and/or zinc concentrations in the intake may have to the observed chronic toxicity.

The study shall be completed and submitted to the Lahontan Water Board By July 31, 2016.

3. Best Management Practices and Pollution Prevention

a. Best Management Practices Plan. The Discharger shall develop and implement a Best Management Practices (BMP) Plan that includes site-specific plans and procedures implemented and/or to be implemented to prevent the generation and potential release of additional pollutants from the Facility to waters of the State. The BMP Plan shall particularly focus on the area and processes associated with the geothermal power plant, and be developed in accordance with the requirements contained in Attachment G to this Order. The BMP Plan shall be developed to prevent the introduction of chemicals or other substances into the effluent from the Facility, and prevent the addition of pollutants from the other non-permitted process waters, spills, or other sources of pollutants at the Facility.

The BMP Plan shall be updated and implemented as soon as possible, but no later than 120 days from the effective date of this Order. The Discharger shall also submit a copy of the BMP Plan to the Executive Officer within 120 days from the effective date of this Order.

4. Construction, Operation and Maintenance Specifications – Not Applicable

5. Special Provisions for Municipal Facilities (POTWs Only) – Not Applicable

6. Other Special Provisions – Not Applicable

7. Compliance Schedules – Not Applicable

VII. COMPLIANCE DETERMINATION – NOT APPLICABLE

ATTACHMENT A – DEFINITIONS

Arithmetic Mean (μ)
Also called the average, is the sum of measured values divided by the number of samples. For ambient water concentrations, the arithmetic mean is calculated as follows:

Arithmetic mean = $\mu = \Sigma x / n$ where: Σx is the sum of the measured ambient water concentrations, and n is the number of samples.

Average Monthly Effluent Limitation (AMEL)
The highest allowable average of daily discharges over a calendar month, calculated as the sum of all daily discharges measured during a calendar month divided by the number of daily discharges measured during that month.

Average Weekly Effluent Limitation (AWEL)
The highest allowable average of daily discharges over a calendar week (Sunday through Saturday), calculated as the sum of all daily discharges measured during a calendar week divided by the number of daily discharges measured during that week.

Bioaccumulative
Those substances taken up by an organism from its surrounding medium through gill membranes, epithelial tissue, or from food and subsequently concentrated and retained in the body of the organism.

Carcinogenic
Pollutants are substances that are known to cause cancer in living organisms.

Coefficient of Variation (CV)
CV is a measure of the data variability and is calculated as the estimated standard deviation divided by the arithmetic mean of the observed values.

Daily Discharge
Daily Discharge is defined as either: (1) the total mass of the constituent discharged over the calendar day (12:00 am through 11:59 pm) or any 24-hour period that reasonably represents a calendar day for purposes of sampling (as specified in the permit), for a constituent with limitations expressed in units of mass or; (2) the unweighted arithmetic mean measurement of the constituent over the day for a constituent with limitations expressed in other units of measurement (e.g., concentration).

The daily discharge may be determined by the analytical results of a composite sample taken over the course of one day (a calendar day or other 24-hour period defined as a day) or by the arithmetic mean of analytical results from one or more grab samples taken over the course of the day.

For composite sampling, if 1 day is defined as a 24-hour period other than a calendar day, the analytical result for the 24-hour period will be considered as the result for the calendar day in which the 24-hour period ends.

Detected, but Not Quantified (DNQ)
DNQ are those sample results less than the RL, but greater than or equal to the laboratory's MDL. Sample results reported as DNQ are estimated concentrations.

Dilution Credit
Dilution Credit is the amount of dilution granted to a discharge in the calculation of a water quality-based effluent limitation, based on the allowance of a specified mixing zone. It is calculated from the dilution ratio or determined through conducting a mixing zone study or modeling of the discharge and receiving water.

Effluent Concentration Allowance (ECA)
ECA is a value derived from the water quality criterion/objective, dilution credit, and ambient background concentration that is used, in conjunction with the coefficient of variation for the effluent monitoring data, to calculate a long-term average (LTA) discharge concentration. The ECA has the same meaning as waste load allocation (WLA) as used in USEPA guidance (Technical Support Document For Water Quality-based Toxics Control, March 1991, second printing, EPA/505/2-90-001).

Enclosed Bays
Enclosed Bays means indentations along the coast that enclose an area of oceanic water within distinct headlands or harbor works. Enclosed bays include all bays where the narrowest distance between the headlands or outermost harbor works is less than 75 percent of the greatest dimension of the enclosed portion of the bay. Enclosed bays include, but are not limited to, Humboldt Bay, Bodega Harbor, Tomales Bay, Drake's Estero, San Francisco Bay, Morro Bay, Los Angeles-Long Beach Harbor, Upper and Lower Newport Bay, Mission Bay, and San Diego Bay. Enclosed bays do not include inland surface waters or ocean waters.

Estimated Chemical Concentration
The estimated chemical concentration that results from the confirmed detection of the substance by the analytical method below the ML value.

Estuaries
Estuaries means waters, including coastal lagoons, located at the mouths of streams that serve as areas of mixing for fresh and ocean waters. Coastal lagoons and mouths of streams that are temporarily separated from the ocean by sandbars shall be considered estuaries. Estuarine waters shall be considered to extend from a bay or the open ocean to a point upstream where there is no significant mixing of fresh water and seawater. Estuarine waters included, but are not limited to, the Sacramento-San Joaquin Delta, as defined in Water Code section 12220, Suisun Bay, Carquinez Strait downstream to the Carquinez Bridge, and appropriate areas of the Smith, Mad, Eel, Noyo, Russian, Klamath, San Diego, and Otay rivers. Estuaries do not include inland surface waters or ocean waters.

Inland Surface Waters
All surface waters of the state that do not include the ocean, enclosed bays, or estuaries.

Instantaneous Maximum Effluent Limitation
The highest allowable value for any single grab sample or aliquot (i.e., each grab sample or aliquot is independently compared to the instantaneous maximum limitation).

Instantaneous Minimum Effluent Limitation
The lowest allowable value for any single grab sample or aliquot (i.e., each grab sample or aliquot is independently compared to the instantaneous minimum limitation).

Maximum Daily Effluent Limitation (MDEL)
The highest allowable daily discharge of a pollutant, over a calendar day (or 24-hour period). For pollutants with limitations expressed in units of mass, the daily discharge is calculated as the total mass of the pollutant discharged over the day. For pollutants with limitations expressed in other units of

measurement, the daily discharge is calculated as the arithmetic mean measurement of the pollutant over the day.

Median
The middle measurement in a set of data. The median of a set of data is found by first arranging the measurements in order of magnitude (either increasing or decreasing order). If the number of measurements (n) is odd, then the median = $X_{(n+1)/2}$. If n is even, then the median = $(X_{n/2} + X_{(n/2)+1})/2$ (i.e., the midpoint between the n/2 and n/2+1).

Method Detection Limit (MDL)
MDL is the minimum concentration of a substance that can be measured and reported with 99 percent confidence that the analyte concentration is greater than zero, as defined in in 40 C.F.R. part 136, Attachment B, revised as of July 3, 1999.

Minimum Level (ML)
ML is the concentration at which the entire analytical system must give a recognizable signal and acceptable calibration point. The ML is the concentration in a sample that is equivalent to the concentration of the lowest calibration standard analyzed by a specific analytical procedure, assuming that all the method specified sample weights, volumes, and processing steps have been followed.

Mixing Zone
Mixing Zone is a limited volume of receiving water that is allocated for mixing with a wastewater discharge where water quality criteria can be exceeded without causing adverse effects to the overall water body.

Not Detected (ND)
Sample results which are less than the laboratory's MDL.

Persistent Pollutants
Persistent pollutants are substances for which degradation or decomposition in the environment is nonexistent or very slow.

Pollutant Minimization Program (PMP)
PMP means waste minimization and pollution prevention actions that include, but are not limited to, product substitution, waste stream recycling, alternative waste management methods, and education of the public and businesses. The goal of the PMP shall be to reduce all potential sources of a priority pollutant(s) through pollutant minimization (control) strategies, including pollution prevention measures as appropriate, to maintain the effluent concentration at or below the water quality-based effluent limitation. Pollution prevention measures may be particularly appropriate for persistent bioaccumulative priority pollutants where there is evidence that beneficial uses are being impacted. The Lahontan Water Board may consider cost effectiveness when establishing the requirements of a PMP. The completion and implementation of a Pollution Prevention Plan, if required pursuant to Water Code section 13263.3(d), shall be considered to fulfill the PMP requirements.

Pollution Prevention
Pollution Prevention means any action that causes a net reduction in the use or generation of a hazardous substance or other pollutant that is discharged into water and includes, but is not limited to, input change, operational improvement, production process change, and product reformulation (as defined in Water Code section 13263.3). Pollution prevention does not include actions that merely shift a pollutant in wastewater from one environmental medium to another environmental medium, unless clear environmental benefits of such an approach are identified to the satisfaction of the State Water Resources Control Board (State Water Board) or Lahontan Water Board.

Reporting Level (RL)
The RL is the ML (and its associated analytical method) chosen by the Discharger for reporting and compliance determination from the MLs included in this Order, including an additional factor if applicable as discussed herein. The MLs included in this Order correspond to approved analytical methods for reporting a sample result that are selected by the Lahontan Water Board either from Appendix 4 of the SIP in accordance with section 2.4.2 of the SIP or established in accordance with section 2.4.3 of the SIP. The ML is based on the proper application of method-based analytical procedures for sample preparation and the absence of any matrix interferences. Other factors may be applied to the ML depending on the specific sample preparation steps employed. For example, the treatment typically applied in cases where there are matrix-effects is to dilute the sample or sample aliquot by a factor of ten. In such cases, this additional factor must be applied to the ML in the computation of the RL.

Source of Drinking Water
Any water designated as municipal or domestic supply (MUN) in a Lahontan Water Board Basin Plan.

Standard Deviation (σ)
Standard Deviation is a measure of variability that is calculated as follows:

$$\sigma = (\sum[(x - \mu)^2]/(n - 1))^{0.5}$$

where:
x is the observed value;
μ is the arithmetic mean of the observed values; and
n is the number of samples.

Toxicity Reduction Evaluation (TRE)
TRE is a study conducted in a step-wise process designed to identify the causative agents of effluent or ambient toxicity, isolate the sources of toxicity, evaluate the effectiveness of toxicity control options, and then confirm the reduction in toxicity. The first steps of the TRE consist of the collection of data relevant to the toxicity, including additional toxicity testing, and an evaluation of facility operations and maintenance practices, and best management practices. A Toxicity Identification Evaluation (TIE) may be required as part of the TRE, if appropriate. (A TIE is a set of procedures to identify the specific chemical(s) responsible for toxicity. These procedures are performed in three phases (characterization, identification, and confirmation) using aquatic organism toxicity tests.)

ATTACHMENT B – MAP

ATTACHMENT C – FLOW SCHEMATIC

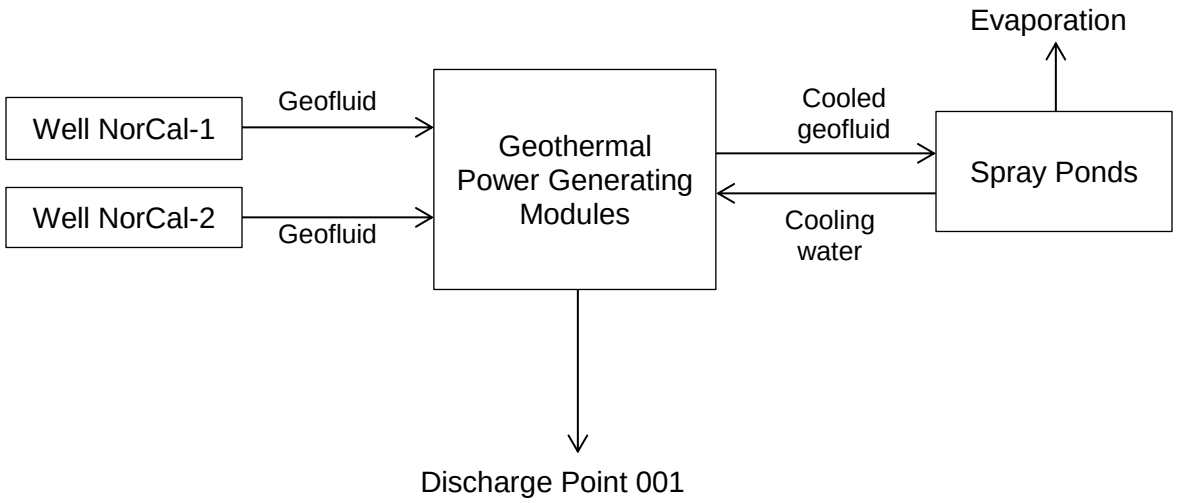

ATTACHMENT D – STANDARD PROVISIONS

I. STANDARD PROVISIONS – PERMIT COMPLIANCE

A. Duty to Comply

1. The Discharger must comply with all of the terms, requirements, and conditions of this Order. Any noncompliance constitutes a violation of the Clean Water Act (CWA) and the California Water Code and is grounds for enforcement action; permit termination, revocation and reissuance, or modification; denial of a permit renewal application; or a combination thereof. (40 C.F.R. § 122.41(a); Wat. Code, §§ 13261, 13263, 13265, 13268, 13000, 13001, 13304, 13350, 13385.)

2. The Discharger shall comply with effluent standards or prohibitions established under Section 307(a) of the CWA for toxic pollutants and with standards for sewage sludge use or disposal established under Section 405(d) of the CWA within the time provided in the regulations that establish these standards or prohibitions, even if this Order has not yet been modified to incorporate the requirement. (40 C.F.R. § 122.41(a)(1).)

B. Need to Halt or Reduce Activity Not a Defense

It shall not be a defense for a Discharger in an enforcement action that it would have been necessary to halt or reduce the permitted activity in order to maintain compliance with the conditions of this Order. (40 C.F.R. § 122.41(c).)

C. Duty to Mitigate

The Discharger shall take all reasonable steps to minimize or prevent any discharge or sludge use or disposal in violation of this Order that has a reasonable likelihood of adversely affecting human health or the environment. (40 C.F.R. § 122.41(d).)

D. Proper Operation and Maintenance

The Discharger shall at all times properly operate and maintain all facilities and systems of treatment and control (and related appurtenances) which are installed or used by the Discharger to achieve compliance with the conditions of this Order. Proper operation and maintenance also includes adequate laboratory controls and appropriate quality assurance procedures. This provision requires the operation of backup or auxiliary facilities or similar systems that are installed by a Discharger only when necessary to achieve compliance with the conditions of this Order. (40 C.F.R. § 122.41(e).)

E. Property Rights

1. This Order does not convey any property rights of any sort or any exclusive privileges. (40 C.F.R. § 122.41(g).

2. The issuance of this Order does not authorize any injury to persons or property or invasion of other private rights, or any infringement of state or local law or regulations. (40 C.F.R. § 122.5(c).)

F. Inspection and Entry

The Discharger shall allow the Lahontan Water Board, State Water Board, U.S. EPA, and/or their authorized representatives (including an authorized contractor acting as their representative), upon the presentation of credentials and other documents, as may be required by law, to (33 U.S.C. § 1318(a)(4)(B); 40 C.F.R. § 122.41(i); Wat. Code, §§ 13267, 13383):

1. Enter upon the Discharger's premises where a regulated facility or activity is located or conducted, or where records are kept under the conditions of this Order (33 U.S.C. § 1318(a)(4)(B)(i); 40 C.F.R. § 122.41(i)(1); Wat. Code, §§ 13267, 13383);

2. Have access to and copy, at reasonable times, any records that must be kept under the conditions of this Order (33 U.S.C. § 1318(a)(4)(B)(ii); 40 C.F.R. § 122.41(i)(2); Wat. Code, §§ 13267, 13383);

3. Inspect and photograph, at reasonable times, any facilities, equipment (including monitoring and control equipment), practices, or operations regulated or required under this Order (33 U.S.C. § 1318(a)(4)(B)(ii); 40 C.F.R. § 122.41(i)(3); Wat. Code, §§ 13267, 13383); and

4. Sample or monitor, at reasonable times, for the purposes of assuring Order compliance or as otherwise authorized by the CWA or the Water Code, any substances or parameters at any location. (33 U.S.C. § 1318(a)(4)(B); 40 C.F.R. § 122.41(i)(4); Wat. Code, §§ 13267, 13383.)

G. Bypass

1. Definitions

a. “Bypass” means the intentional diversion of waste streams from any portion of a treatment facility. (40 C.F.R. § 122.41(m)(1)(i).)

b. “Severe property damage” means substantial physical damage to property, damage to the treatment facilities, which causes them to become inoperable, or substantial and permanent loss of natural resources that can reasonably be expected to occur in the absence of a bypass. Severe property damage does not mean economic loss caused by delays in production. (40 C.F.R. § 122.41(m)(1)(ii).)

2. Bypass not exceeding limitations. The Discharger may allow any bypass to occur which does not cause exceedances of effluent limitations, but only if it is for essential maintenance to assure efficient operation. These bypasses are not subject to the provisions listed in Standard Provisions – Permit Compliance I.G.3, I.G.4, and I.G.5 below. (40 C.F.R. § 122.41(m)(2).)

3. Prohibition of bypass. Bypass is prohibited, and the Lahontan Water Board may take enforcement action against a Discharger for bypass, unless (40 C.F.R. § 122.41(m)(4)(i)):

a. Bypass was unavoidable to prevent loss of life, personal injury, or severe property damage (40 C.F.R. § 122.41(m)(4)(i)(A));

b. There were no feasible alternatives to the bypass, such as the use of auxiliary treatment facilities, retention of untreated wastes, or maintenance during normal periods of equipment downtime. This condition is not satisfied if adequate back-up equipment should have been installed in the exercise of reasonable engineering judgment to prevent a bypass that occurred during normal periods of equipment downtime or preventive maintenance (40 C.F.R. § 122.41(m)(4)(i)(B)); and

c. The Discharger submitted notice to the Lahontan Water Board as required under Standard Provisions – Permit Compliance I.G.5 below. (40 C.F.R. § 122.41(m)(4)(i)(C).)

4. The Lahontan Water Board may approve an anticipated bypass, after considering its adverse effects, if the Lahontan Water Board determines that it will meet the three conditions listed in Standard Provisions – Permit Compliance I.G.3 above. (40 C.F.R. § 122.41(m)(4)(ii).)

5. Notice

a. Anticipated bypass. If the Discharger knows in advance of the need for a bypass, it shall submit a notice, if possible at least 10 days before the date of the bypass. (40 C.F.R. § 122.41(m)(3)(i).)

b. Unanticipated bypass. The Discharger shall submit notice of an unanticipated bypass as required in Standard Provisions - Reporting V.E below (24-hour notice). (40 C.F.R. § 122.41(m)(3)(ii).)

H. Upset

Upset means an exceptional incident in which there is unintentional and temporary noncompliance with technology based permit effluent limitations because of factors beyond the reasonable control of the Discharger. An upset does not include noncompliance to the extent caused by operational error, improperly designed treatment facilities, inadequate treatment facilities, lack of preventive maintenance, or careless or improper operation. (40 C.F.R. § 122.41(n)(1).)

1. Effect of an upset. An upset constitutes an affirmative defense to an action brought for noncompliance with such technology based permit effluent limitations if the requirements of Standard Provisions – Permit Compliance I.H.2 below are met. No determination made during administrative review of claims that noncompliance was caused by upset, and before an action for noncompliance, is final administrative action subject to judicial review. (40 C.F.R. § 122.41(n)(2).)

2. Conditions necessary for a demonstration of upset. A Discharger who wishes to establish the affirmative defense of upset shall demonstrate, through properly signed, contemporaneous operating logs or other relevant evidence that (40 C.F.R. § 122.41(n)(3)):

a. An upset occurred and that the Discharger can identify the cause(s) of the upset (40 C.F.R. § 122.41(n)(3)(i));

b. The permitted facility was, at the time, being properly operated (40 C.F.R. § 122.41(n)(3)(ii));

c. The Discharger submitted notice of the upset as required in Standard Provisions – Reporting V.E.2.b below (24-hour notice) (40 C.F.R. § 122.41(n)(3)(iii)); and

d. The Discharger complied with any remedial measures required under Standard Provisions – Permit Compliance I.C above. (40 C.F.R. § 122.41(n)(3)(iv).)

3. Burden of proof. In any enforcement proceeding, the Discharger seeking to establish the occurrence of an upset has the burden of proof. (40 C.F.R. § 122.41(n)(4).)

II. STANDARD PROVISIONS – PERMIT ACTION

A. General

This Order may be modified, revoked and reissued, or terminated for cause. The filing of a request by the Discharger for modification, revocation and reissuance, or termination, or a notification of planned changes or anticipated noncompliance does not stay any Order condition. (40 C.F.R. § 122.41(f).)

B. Duty to Reapply

If the Discharger wishes to continue an activity regulated by this Order after the expiration date of this Order, the Discharger must apply for and obtain a new permit. (40 C.F.R. § 122.41(b).)

C. Transfers

This Order is not transferable to any person except after notice to the Lahontan Water Board. The Lahontan Water Board may require modification or revocation and reissuance of the Order to change the name of the Discharger and incorporate such other requirements as may be necessary under the CWA and the Water Code. (40 C.F.R. §§ 122.41(l)(3), 122.61.)

III. STANDARD PROVISIONS – MONITORING

A. Samples and measurements taken for the purpose of monitoring shall be representative of the monitored activity. (40 C.F.R. § 122.41(j)(1).)

B. Monitoring results must be conducted according to test procedures approved under 40 C.F.R. part 136 for the analyses of pollutants unless another method is required under 40 C.F.R. subchapters N or O. In the case of pollutants for which there are no approved methods under 40 C.F.R. part 136 or otherwise required under 40 C.F.R. subchapters N or O, monitoring must be conducted according to a test procedure specified in this Order for such pollutants. (40 C.F.R. §§ 122.41(j)(4), 122.44(i)(1)(iv).)

IV. STANDARD PROVISIONS – RECORDS

A. Except for records of monitoring information required by this Order related to the Discharger's sewage sludge use and disposal activities, which shall be retained for a period of at least five years (or longer as required by 40 C.F.R. part 503), the Discharger shall retain records of all monitoring information, including all calibration and maintenance records and all original strip chart recordings for continuous monitoring instrumentation, copies of all reports required by this Order, and records of all data used to complete the application for this Order, for a period of at least three (3) years from the date of the sample, measurement, report or application. This period may be extended by request of the Lahontan Water Board Executive Officer at any time. (40 C.F.R. § 122.41(j)(2).)

B. Records of monitoring information shall include:

1. The date, exact place, and time of sampling or measurements (40 C.F.R. § 122.41(j)(3)(i));

2. The individual(s) who performed the sampling or measurements (40 C.F.R. § 122.41(j)(3)(ii));

3. The date(s) analyses were performed (40 C.F.R. § 122.41(j)(3)(iii));

4. The individual(s) who performed the analyses (40 C.F.R. § 122.41(j)(3)(iv));

5. The analytical techniques or methods used (40 C.F.R. § 122.41(j)(3)(v)); and

6. The results of such analyses. (40 C.F.R. § 122.41(j)(3)(vi).)

C. Claims of confidentiality for the following information will be denied (40 C.F.R. § 122.7(b)):

1. The name and address of any permit applicant or Discharger (40 C.F.R. § 122.7(b)(1)); and

2. Permit applications and attachments, permits and effluent data. (40 C.F.R. § 122.7(b)(2).)

V. STANDARD PROVISIONS – REPORTING

A. Duty to Provide Information

The Discharger shall furnish to the Lahontan Water Board, State Water Board, or USEPA within a reasonable time, any information which the Lahontan Water Board, State Water Board, or USEPA may request to determine whether cause exists for modifying, revoking and

reissuing, or terminating this Order or to determine compliance with this Order. Upon request, the Discharger shall also furnish to the Lahontan Water Board, State Water Board, or USEPA copies of records required to be kept by this Order. (40 C.F.R. § 122.41(h); Wat. Code, §§ 13267, 13383.)

B. Signatory and Certification Requirements

1. All applications, reports, or information submitted to the Lahontan Water Board, State Water Board, and/or USEPA shall be signed and certified in accordance with Standard Provisions – Reporting V.B.2, V.B.3, V.B.4, and V.B.5 below. (40 C.F.R. § 122.41(k).)

2. All permit applications shall be signed by a general partner or the proprietor, respectively. (40 C.F.R. § 122.22(a)(2).)

3. All reports required by this Order and other information requested by the Lahontan Water Board, State Water Board, or USEPA shall be signed by a person described in Standard Provisions – Reporting V.B.2 above, or by a duly authorized representative of that person. A person is a duly authorized representative only if:

a. The authorization is made in writing by a person described in Standard Provisions – Reporting V.B.2 above (40 C.F.R. § 122.22(b)(1));

b. The authorization specifies either an individual or a position having responsibility for the overall operation of the regulated facility or activity such as the position of plant manager, operator of a well or a well field, superintendent, position of equivalent responsibility, or an individual or position having overall responsibility for environmental matters for the company. (A duly authorized representative may thus be either a named individual or any individual occupying a named position.) (40 C.F.R. § 122.22(b)(2)); and

c. The written authorization is submitted to the Lahontan Water Board and State Water Board. (40 C.F.R. § 122.22(b)(3).)

4. If an authorization under Standard Provisions – Reporting V.B.3 above is no longer accurate because a different individual or position has responsibility for the overall operation of the facility, a new authorization satisfying the requirements of Standard Provisions – Reporting V.B.3 above must be submitted to the Lahontan Water Board and State Water Board prior to or together with any reports, information, or applications, to be signed by an authorized representative. (40 C.F.R. § 122.22(c).)

5. Any person signing a document under Standard Provisions – Reporting V.B.2 or V.B.3 above shall make the following certification:

"I certify under penalty of law that this document and all attachments were prepared under my direction or supervision in accordance with a system designed to assure that qualified personnel properly gather and evaluate the information submitted. Based on my inquiry of the person or persons who manage the system or those persons directly responsible for gathering the information, the information submitted is, to the best of my knowledge and belief, true, accurate, and complete. I am aware that there are significant penalties for submitting false information, including the possibility of fine and imprisonment for knowing violations." (40 C.F.R. § 122.22(d).)

C. Monitoring Reports

1. Monitoring results shall be reported at the intervals specified in the Monitoring and Reporting Program (Attachment E) in this Order. (40 C.F.R. § 122.41(l)(4).)

2. Monitoring results must be reported on a Discharge Monitoring Report (DMR) form or forms provided or specified by the Lahontan Water Board or State Water Board for reporting results of monitoring of sludge use or disposal practices. (40 C.F.R. § 122.41(l)(4)(i).)

3. If the Discharger monitors any pollutant more frequently than required by this Order using test procedures approved under 40 C.F.R. part 136, or another method required for an industry-specific waste stream under 40 C.F.R. subchapters N or O, the results of such monitoring shall be included in the calculation and reporting of the data submitted in the DMR or sludge reporting form specified by the Lahontan Water Board. (40 C.F.R. § 122.41(l)(4)(ii).)

4. Calculations for all limitations, which require averaging of measurements, shall utilize an arithmetic mean unless otherwise specified in this Order. (40 C.F.R. § 122.41(l)(4)(iii).)

D. Compliance Schedules

Reports of compliance or noncompliance with, or any progress reports on, interim and final requirements contained in any compliance schedule of this Order, shall be submitted no later than 14 days following each schedule date. (40 C.F.R. § 122.41(l)(5).)

E. Twenty-Four Hour Reporting

1. The Discharger shall report any noncompliance that may endanger health or the environment. Any information shall be provided orally within 24 hours from the time the Discharger becomes aware of the circumstances. A written submission shall also be provided within five (5) days of the time the Discharger becomes aware of the circumstances. The written submission shall contain a description of the noncompliance and its cause; the period of noncompliance, including exact dates and times, and if the noncompliance has not been corrected, the anticipated time it is expected to continue; and steps taken or planned to reduce, eliminate, and prevent reoccurrence of the noncompliance. (40 C.F.R. § 122.41(l)(6)(i).)

2. The following shall be included as information that must be reported within 24 hours under this paragraph (40 C.F.R. § 122.41(l)(6)(ii)):

a. Any unanticipated bypass that exceeds any effluent limitation in this Order. (40 C.F.R. § 122.41(l)(6)(ii)(A).)

b. Any upset that exceeds any effluent limitation in this Order. (40 C.F.R. § 122.41(l)(6)(ii)(B).)

3. The Lahontan Water Board may waive the above-required written report under this provision on a case-by-case basis if an oral report has been received within 24 hours. (40 C.F.R. § 122.41(l)(6)(iii).)

F. Planned Changes

The Discharger shall give notice to the Lahontan Water Board as soon as possible of any planned physical alterations or additions to the permitted facility. Notice is required under this provision only when (40 C.F.R. § 122.41(l)(1)):

1. The alteration or addition to a permitted facility may meet one of the criteria for determining whether a facility is a new source in section 122.29(b) (40 C.F.R. § 122.41(l)(1)(i)); or

2. The alteration or addition could significantly change the nature or increase the quantity of pollutants discharged. This notification applies to pollutants that are subject neither to effluent limitations in this Order nor to notification requirements under section

122.42(a)(1) (see Additional Provisions—Notification Levels VII.A.1). (40 C.F.R. § 122.41(l)(1)(ii).)

3. The alteration or addition results in a significant change in the Discharger's sludge use or disposal practices, and such alteration, addition, or change may justify the application of permit conditions that are different from or absent in the existing permit, including notification of additional use or disposal sites not reported during the permit application process or not reported pursuant to an approved land application plan. (40 C.F.R.§ 122.41(l)(1)(iii).)

G. Anticipated Noncompliance

The Discharger shall give advance notice to the Lahontan Water Board or State Water Board of any planned changes in the permitted facility or activity that may result in noncompliance with this Order's requirements. (40 C.F.R. § 122.41(l)(2).)

H. Other Noncompliance

The Discharger shall report all instances of noncompliance not reported under Standard Provisions – Reporting V.C, V.D, and V.E above at the time monitoring reports are submitted. The reports shall contain the information listed in Standard Provision – Reporting V.E above. (40 C.F.R. § 122.41(l)(7).)

I. Other Information

When the Discharger becomes aware that it failed to submit any relevant facts in a permit application, or submitted incorrect information in a permit application or in any report to the Lahontan Water Board**,** State Water Board, or USEPA, the Discharger shall promptly submit such facts or information. (40 C.F.R. § 122.41(l)(8).)

VI. STANDARD PROVISIONS – ENFORCEMENT

A. The Lahontan Water Board is authorized to enforce the terms of this permit under several provisions of the Water Code, including, but not limited to, sections 13385, 13386, and 13387.

VII. ADDITIONAL PROVISIONS – NOTIFICATION LEVELS

A. Non-Municipal Facilities

Existing manufacturing, commercial, mining, and silvicultural Dischargers shall notify the Lahontan Water Board as soon as they know or have reason to believe (40 C.F.R. § 122.42(a)):

1. That any activity has occurred or will occur that would result in the discharge, on a routine or frequent basis, of any toxic pollutant that is not limited in this Order, if that discharge will exceed the highest of the following "notification levels" (40 C.F.R. § 122.42(a)(1)):

a. 100 micrograms per liter (µg/L) (40 C.F.R. § 122.42(a)(1)(i));

b. 200 µg/L for acrolein and acrylonitrile; 500 µg/L for 2,4-dinitrophenol and 2-methyl-4,6-dinitrophenol; and 1 milligram per liter (mg/L) for antimony (40 C.F.R. § 122.42(a)(1)(ii));

c. Five (5) times the maximum concentration value reported for that pollutant in the Report of Waste Discharge (40 C.F.R. § 122.42(a)(1)(iii)); or

d. The level established by the Lahontan Water Board in accordance with section 122.44(f). (40 C.F.R. § 122.42(a)(1)(iv).)

2. That any activity has occurred or will occur that would result in the discharge, on a non-routine or infrequent basis, of any toxic pollutant that is not limited in this Order, if that discharge will exceed the highest of the following “notification levels" (40 C.F.R. § 122.42(a)(2)):

a. 500 micrograms per liter (µg/L) (40 C.F.R. § 122.42(a)(2)(i));

b. 1 milligram per liter (mg/L) for antimony (40 C.F.R. § 122.42(a)(2)(ii));

c. Ten (10) times the maximum concentration value reported for that pollutant in the Report of Waste Discharge (40 C.F.R. § 122.42(a)(2)(iii)); or

d. The level established by the Lahontan Water Board in accordance with section 122.44(f). (40 C.F.R. § 122.42(a)(2)(iv).)

ATTACHMENT E – MONITORING AND REPORTING PROGRAM

Contents

I. General Monitoring Provisions E-2
II. Monitoring Locations E-2
III. Influent Monitoring Requirements E-3
  A. Monitoring Location INF-001 ..... E-3
IV. Effluent Monitoring Requirements E-3
  A. Monitoring Location EFF-001 ..... E-3
V. Whole Effluent Toxicity Testing Requirements E-4
VI. Land Discharge Monitoring Requirements – Not Applicable E-5
VII. Recycling Monitoring Requirements – Not Applicable E-5
VIII. Receiving Water Monitoring Requirements – Not Applicable E-5
IX. Other Monitoring Requirements – Not Applicable E-5
X. Reporting Requirements E-5
  A. General Monitoring and Reporting Requirements E-5
  B. Self-Monitoring Reports (SMRs) E-5
  C. Discharge Monitoring Reports (DMR's) – Not Applicable E-7
  D. Other Reports E-7

Tables

Table E-1. Monitoring Station Locations E-2
Table E-2. Influent Monitoring – Monitoring Location INF-001 ..... E-3
Table E-3. Effluent Monitoring – Monitoring Location EFF-001 ..... E-3
Table E-4. Monitoring Periods and Reporting Schedule E-5

ATTACHMENT E – MONITORING AND REPORTING PROGRAM (MRP)

The Code of Federal Regulations (40 C.F.R. § 122.48) requires that all NPDES permits specify monitoring and reporting requirements. Water Code sections 13267 and 13383 also authorize the Lahontan Water Board to require technical and monitoring reports. This MRP establishes monitoring and reporting requirements that implement federal and California regulations.

I. GENERAL MONITORING PROVISIONS

A. Samples and measurements taken as required herein shall be representative of the volume and nature of the monitored discharge. All samples shall be taken at the monitoring locations specified below and, unless otherwise specified, before the monitored flow joins or is diluted by any other waste stream, body of water, or substance. Monitoring locations shall not be changed without notification to and the approval of this Lahontan Water Board.

B. Appropriate flow measurement devices and methods consistent with accepted scientific practices shall be selected and used to ensure the accuracy and reliability of measurements of the volume of monitored discharges. The devices shall be installed, calibrated and maintained to ensure that the accuracy of the measurements is consistent with the accepted capability of that type of device. Devices selected shall be capable of measuring flows with a maximum deviation of less than ±10 percent from true discharge rates throughout the range of expected discharge volumes.

C. Laboratory Certification. Laboratories analyzing monitoring samples shall be certified by the Department of Public Health (DPH), in accordance with the provision of Water Code section 13176, and must include quality assurance/quality control data with their reports.

D. All monitoring instruments and devices used by the Discharger to fulfill the prescribed monitoring program shall be properly maintained and calibrated as necessary to ensure their continued accuracy. All flow measurement devices shall be calibrated at least once per year to ensure continued accuracy of the devices.

E. Monitoring results, including non-compliance, shall be reported at intervals and in a manner specified in this Monitoring and Reporting Program.

II. MONITORING LOCATIONS

The Discharger shall establish the following monitoring locations to demonstrate compliance with the effluent limitations, discharge specifications, and other requirements in this Order:

Table E-1. Monitoring Station Locations

Discharge Point Name	Monitoring Location Name	Monitoring Location Description
--	INF-001	At the wellhead prior to the heat exchange process. [Latitude: 40°, 18’, 2.97” N and Longitude: 120°, 11’, 42.82”]
001	EFF-001	A location where a representative sample of the effluent from the Facility can be collected; within 50 yards from the point of discharge into the receiving water channel. [Latitude 40°, 18', 2.05" N and Longitude 120°, 11', 43.41" W]

III. INFLUENT MONITORING REQUIREMENTS

A. Monitoring Location INF-001

1. The Discharger shall monitor geothermal fluid at the wellhead prior to the heat exchange process at Monitoring Location INF-001 as follows:

Table E-2. Influent Monitoring – Monitoring Location INF-001

Parameter	Units	Sample Type	Minimum Sampling Frequency	Required Analytical Test Method
Arsenic, Total Recoverable	µg/L	Grab	2/Year[1]	[2, 3]
Boron, Total Recoverable	µg/L	Grab	2/Year[1]	[2]
Copper, Total Recoverable	µg/L	Grab	2/Year[1]	[2, 3]
Lead, Total Recoverable	µg/L	Grab	2/Year[1]	[2, 3]
Mercury, Total Recoverable	µg/L	Grab	2/Year[1]	[2, 3]
Molybdenum, Total Recoverable	µg/L	Grab	2/Year[1]	[2]
Zinc, Total Recoverable	µg/L	Grab	2/Year[1]	[2, 3]
Remaining Priority Pollutants[4]	µg/L	Grab	[5]	[2, 3]
Hardness (as $CaCO_3$)	mg/L	Grab	2/Year[1]	[2]
pH	standard units	Grab	2/Year[1]	[2]

[1] Pollutants must be sampled in May and November, concurrent with effluent samples.
[2] Pollutants shall be analyzed using the analytical methods described in 40 C.F.R. Part 136.
[3] For priority pollutant constituents the reporting level shall be consistent with Sections 2.4.2 and 2.4.3 of the Policy for Implementation of Toxics Standards for Inland Surface Waters, Enclosed Bays, and Estuaries of California (SIP). If more than one analytical test method is listed for a given pollutant, the Discharger must select the lowest minimum levels specified in Appendix 4 of the SIP.
[4] The Discharger shall monitor for all priority pollutants that are not monitored 2/Year. A list of all 126 priority pollutants can be found in Appendix 4 of the SIP.
[5] Pollutants must be sampled in May and November during the fourth year following the date of permit adoption.
[6] Temperature shall be measured and recorded during sample collection.

IV. EFFLUENT MONITORING REQUIREMENTS

A. Monitoring Location EFF-001

1. The Discharger shall monitor effluent from the Facility at Monitoring Location EFF-001 as follows. If more than one analytical test method is listed for a given parameter, the Discharger must select from the listed methods and corresponding Minimum Level:

Table E-3. Effluent Monitoring – Monitoring Location EFF-001

Parameter	Units	Sample Type	Minimum Sampling Frequency	Required Analytical Test Method
Flow	MGD	Meter	Continuous	--
Arsenic, Total Recoverable	µg/L	Grab	2/Year[1]	[2, 3]
Boron, Total	µg/L	Grab	2/Year[1]	[2]

Parameter	Units	Sample Type	Minimum Sampling Frequency	Required Analytical Test Method
Recoverable				
Copper, Total Recoverable	µg/L	Grab	2/Year[1]	[2, 3]
Lead, Total Recoverable	µg/L	Grab	2/Year[1]	[2, 3]
Mercury, Total Recoverable	µg/L	Grab	2/Year[1]	[2, 3]
Molybdenum, Total Recoverable	µg/L	Grab	2/Year[1]	[2]
Zinc, Total Recoverable	µg/L	Grab	2/Year[1]	[2, 3]
Remaining Priority Pollutants[4]	µg/L	Grab	[5]	[2, 3]
Hardness (as $CaCO_3$)	mg/L	Grab	2/Year[1]	[2]
pH	standard units	Grab	2/Year[1]	[2]
Temperature[6]	ºF	Grab	2/Year[1]	[2]
Whole Effluent Toxicity	[7]	[7]	[7]	[7]

[1] Pollutants must be sampled in May and November, concurrent with influent samples.
[2] Pollutants shall be analyzed using the analytical methods described in 40 C.F.R. Part 136.
[3] For priority pollutant constituents the reporting level shall be consistent with Sections 2.4.2 and 2.4.3 of the Policy for Implementation of Toxics Standards for Inland Surface Waters, Enclosed Bays, and Estuaries of California (SIP). If more than one analytical test method is listed for a given pollutant, the Discharger must select the lowest minimum levels specified in Appendix 4 of the SIP.
[4] The Discharger shall monitor for all priority pollutants that are not monitored 2/Year. A list of all 126 priority pollutants can be found in Appendix 4 of the SIP.
[5] Pollutants must be sampled in May and November during the fourth year following the date of permit adoption.
[6] Temperature shall be measured and recorded during sample collection.
[7] See Section V. Whole Effluent Toxicity Testing Requirements.

V. WHOLE EFFLUENT TOXICITY TESTING REQUIREMENTS

A. Acute Toxicity Testing – Monitoring Location EFF-001

The Discharger shall conduct acute toxicity testing to determine whether the effluent is contributing acute toxicity to the receiving water. The Discharger shall meet the following acute toxicity testing requirements:

1. Monitoring Frequency – The Discharger shall perform acute toxicity testing a minimum of twice during the 4th year following the date of permit adoption.

2. Sample Types – Samples shall be grab samples and shall be representative of the volume and quality of the discharge. Where possible, the Discharger shall perform both acute toxicity testing and chemical-specific testing for parameters limited by this Order for which a grab sample is required using a split sample.

3. Test Species – Test species shall be fathead minnows (*Pimephales promelas*).

4. Methods – The acute toxicity testing samples shall be analyzed using EPA-821-R-02-012, Fifth Edition. Temperature and pH shall be recorded at the time of sample collection. No pH adjustment may be made unless approved by the Executive Officer.

5. Test Failure – If an acute toxicity test does not meet all test acceptability criteria, as specified in the test method, the Discharger must re-sample and re-test as soon as possible, not to exceed 14 days following notification of test failure.

6. Reporting – Acute WET results shall be reported in percent survival.

The Discharger shall submit with the monthly report in which whole effluent toxicity test results are due, a full report of acute toxicity testing that includes: (1) the toxicity test results; (2) the dates of sample collection and initiation of each toxicity test; and (3) the flow rate at the time of sample collection.

VI. LAND DISCHARGE MONITORING REQUIREMENTS – NOT APPLICABLE

VII. RECYCLING MONITORING REQUIREMENTS – NOT APPLICABLE

VIII. RECEIVING WATER MONITORING REQUIREMENTS – NOT APPLICABLE

IX. OTHER MONITORING REQUIREMENTS – NOT APPLICABLE

X. REPORTING REQUIREMENTS

A. General Monitoring and Reporting Requirements

1. The Discharger shall comply with all Standard Provisions (Attachment D) related to monitoring, reporting, and recordkeeping.

B. Self-Monitoring Reports (SMRs)

1. The Discharger shall electronically submit SMRSMRss using the State Water Board's California Integrated Water Quality System (CIWQS) Program Web site (http://www.waterboards.ca.gov/ciwqs/index.html). The CIWQS Web site will provide additional information for SMR submittal in the event there will be a planned service interruption for electronic submittal.

2. The Discharger shall report in the SMR the results for all monitoring specified in this MRP under sections III through IX. The Discharger shall submit semiannual SMRs including the results of all required monitoring using USEPA-approved test methods or other test methods specified in this Order. SMRs are to include all new monitoring results obtained since the last SMR was submitted. If the Discharger monitors any pollutant more frequently than required by this Order, the results of this monitoring shall be included in the calculations and reporting of the data submitted in the SMR.

3. Monitoring periods and reporting for all required monitoring shall be completed according to the following schedule:

Table E-4. Monitoring Periods and Reporting Schedule

Sampling Frequency	Monitoring Period Begins On…	Monitoring Period	SMR Due Date
Continuous	Permit effective date	All	Submit with semi-annual SMR
2/Year	Permit effective date	Once in May	Not later than June 30
		Once in November	Not later than January 15

4. Reporting Protocols. The Discharger shall report with each sample result the applicable Reporting Level (RL) and the current Method Detection Limit (MDL), as determined by the procedure in 40 C.F.R. Part 136. The Discharger shall report the results of analytical determinations for the presence of chemical constituents in a sample using the following reporting protocols:

a. Sample results greater than or equal to the RL shall be reported as measured by the laboratory (i.e., the measured chemical concentration in the sample).

b. Sample results less than the RL, but greater than or equal to the laboratory's MDL, shall be reported as "Detected, but Not Quantified," or DNQ. The estimated chemical concentration of the sample shall also be reported.

For the purposes of data collection, the laboratory shall write the estimated chemical concentration next to DNQ. The laboratory may, if such information is available, include numerical estimates of the data quality for the reported result. Numerical estimates of data quality may be percent accuracy (± a percentage of the reported value), numerical ranges (low to high), or any other means considered appropriate by the laboratory.

c. Sample results less than the laboratory's MDL shall be reported as "Not Detected," or ND.

d. Dischargers are to instruct laboratories to establish calibration standards so that the ML value (or its equivalent if there is differential treatment of samples relative to calibration standards) is the lowest calibration standard. At no time is the Discharger to use analytical data derived from extrapolation beyond the lowest point of the calibration curve.

5. Compliance Determination. Compliance with effluent limitations for priority pollutants shall be determined using sample reporting protocols defined above and Attachment A. For purposes of reporting and administrative enforcement by the Lahontan Water Board and State Water Board, the Discharger shall be deemed out of compliance with effluent limitations if the concentration of the priority pollutant in the monitoring sample is greater than the effluent limitation and greater than or equal to the reporting level (RL).

6. Multiple Sample Data. When determining compliance with an AMEL for priority pollutants and more than one sample result is available, the Discharger shall compute the arithmetic mean unless the data set contains one or more reported determinations of "Detected, but Not Quantified" (DNQ) or "Not Detected" (ND). In those cases, the Discharger shall compute the median in place of the arithmetic mean in accordance with the following procedure:

a. The data set shall be ranked from low to high, ranking the reported ND determinations lowest, DNQ determinations next, followed by quantified values (if any). The order of the individual ND or DNQ determinations is unimportant.

b. The median value of the data set shall be determined. If the data set has an odd number of data points, then the median is the middle value. If the data set has an even number of data points, then the median is the average of the two values around the middle unless one or both of the points are ND or DNQ, in which case the median value shall be the lower of the two data points where DNQ is lower than a value and ND is lower than DNQ.

7. The Discharger shall submit SMRs in accordance with the following requirements:

a. The Discharger shall arrange all reported data in a tabular format. The data shall be summarized to clearly illustrate whether the facility is operating in compliance with interim and/or final effluent limitations. The Discharger is not required to duplicate the submittal of data that is entered in a tabular format within CIWQS. When electronic submittal of data is required and CIWQS does not provide for entry into a

tabular format within the system, the Discharger shall electronically submit the data in a tabular format as an attachment.

b. The Discharger shall attach a cover letter to the SMR. The information contained in the cover letter shall clearly identify violations of the WDRs; discuss corrective actions taken or planned; and the proposed time schedule for corrective actions. Identified violations must include a description of the requirement that was violated and a description of the violation.

C. Discharge Monitoring Reports– Not Applicable

D. Other Reports

1. The Discharger shall report the results of the Discharge Point 001 Chronic Toxicity Evaluation Study by July 31, 2016, as required by Special Provision VI.C.2.a.

2. The Discharger shall submit a copy of the BMP Plan, as required by Special Provision VI.C.3.a to the Executive Officer within 120 days from the effective date of this Order.

3. Operation and Maintenance

A summary of any operational problems and maintenance activities shall be submitted to the Lahontan Water Board with each semiannual SMR. This summary shall discuss:

a. Any modifications to plant operations or spray cooling pond system.

b. Any maintenance conducted on the plant or spray cooling pond system.

c. Any problems occurring with plant operations or spray cooling pond system.

d. The calibration of any flow measuring devices.

ATTACHMENT F – FACT SHEET

Contents

I. Permit Information F-3
II. Facility Description F-4
A. Description of Wastewater Treatment and Controls F-5
B. Discharge Points and Receiving Waters F-5
C. Summary of Existing Requirements and Self-Monitoring Report (SMR) Data F-5
D. Compliance Summary F-6
E. Planned Changes – Not Applicable F-7
III. Applicable Plans, Policies, and Regulations F-7
A. Legal Authorities F-7
B. California Environmental Quality Act (CEQA) F-7
C. State and Federal Laws, Regulations, Policies, and Plans F-7
D. Impaired Water Bodies on CWA 303(d) List F-9
E. Other Plans, Polices and Regulations – Not Applicable F-9
IV. Rationale For Effluent Limitations and Discharge Specifications F-9
A. Discharge Prohibitions F-10
B. Technology-Based Effluent Limitations F-10
1. Scope and Authority F-10
2. Applicable Technology-Based Effluent Limitations F-11
C. Water Quality-Based Effluent Limitations (WQBELs) F-11
1. Scope and Authority F-11
2. Applicable Beneficial Uses and Water Quality Criteria and Objectives F-12
3. Determining the Need for WQBELs F-13
4. WQBEL Calculations F-17
5. Whole Effluent Toxicity (WET) F-22
D. Final Effluent Limitation Considerations F-24
1. Anti-Backsliding Requirements F-24
2. Antidegradation Policies F-24
3. Stringency of Requirements for Individual Pollutants F-25
E. Interim Effluent Limitations – Not Applicable F-25
F. Land Discharge Specifications – Not Applicable F-25
G. Recycling Specifications – Not Applicable F-25
V. Rationale for Receiving Water Limitations F-25
A. Surface Water F-25
B. Groundwater F-26
VI. Rationale for Provisions F-26
A. Standard Provisions F-26
B. Special Provisions F-26
1. Reopener Provisions F-26
2. Special Studies and Additional Monitoring Requirements F-26
3. Best Management Practices and Pollution Prevention F-27
4. Construction, Operation, and Maintenance Specifications – Not Applicable F-27
5. Special Provisions for Municipal Facilities (POTWs Only) – Not Applicable F-27
6. Other Special Provisions – Not Applicable F-27
7. Compliance Schedules – Not Applicable F-27
VII. Rationale for Monitoring and Reporting Requirements F-27
A. Influent Monitoring F-28

B. Effluent Monitoring F-28
C. Whole Effluent Toxicity Testing Requirements F-29
D. Receiving Water Monitoring F-29
1. Surface Water – Not Applicable F-29
2. Groundwater – Not Applicable F-29
E. Other Monitoring Requirements – Not Applicable F-29
VIII. Public Participation F-29
A. Notification of Interested Parties F-29
B. Written Comments F-29
C. Public Hearing Opportunity F-30
D. Reconsideration of Waste Discharge Requirements F-30
E. Information and Copying F-30
F. Register of Interested Persons F-30
G. Additional Information F-30

Tables

Table F-1. Facility Information F-3
Table F-2. Historic Effluent Limitations and Monitoring Data – Discharge Point 001 ..... F-6
Table F-3. Compliance Summary – Discharge Point 001 ..... F-7
Table F-4. Surface Water Basin Plan Beneficial Uses F-8
Table F-5. Ground Water Basin Plan Beneficial Uses F-8
Table F-6. Summary of Technology-based Effluent Limitations F-11
Table F-7. Reasonable Potential Analysis Summary for Discharge Point 001 ..... F-14
Table F-8. Comparison of Influent Pollutant Concentrations to Applicable Water Quality Objectives F-18
Table F-9. Final Effluent Limitations for Discharge Point 001 ..... F-22
Table F-10. Acute WET Testing Results F-22
Table F-11. Chronic WET Testing Results F-23

ATTACHMENT F – FACT SHEET

As described in section II.B of this Order, the Lahontan Water Board incorporates this Fact Sheet as findings of the Lahontan Water Board supporting the issuance of this Order. This Fact Sheet includes the legal requirements and technical rationale that serve as the basis for the requirements of this Order.

This Order has been prepared under a standardized format to accommodate a broad range of discharge requirements for Dischargers in California. Only those sections or subsections of this Order that are specifically identified as “not applicable” have been determined not to apply to this Discharger. Sections or subsections of this Order not specifically identified as “not applicable” are fully applicable to this Discharger.

I. PERMIT INFORMATION

The following table summarizes administrative information related to the facility.

Table F-1. Facility Information

WDID	6A188410000
Discharger	Amedee Geothermal Venture 1
Name of Facility	Amedee Geothermal Power Plant
Facility Address	Amedee Hot Springs, Section 8, T28N, R16E, MDB&M
	Amedee, California
	Lassen County
Facility Contact, Title and Phone	Dave Fairbank, Project Manager, (775) 588-7300
Authorized Person to Sign and Submit Reports	Dave Fairbank, Project Manager, (775) 588-7300
Mailing Address	P.O. Box 12219, Zephyr Cove, NV 89448
Billing Address	Same as Mailing Address
Type of Facility	Geothermal Power Production, SIC Code 4961
Major or Minor Facility	Minor
Threat to Water Quality	3
Complexity	C
Pretreatment Program	N/A
Recycling Requirements	N/A
Facility Permitted Flow	5.616 million gallons per day (MGD)
Facility Design Flow	5.616 MGD
Watershed	Susan River Hydrologic Area
Receiving Water	Amedee Hot Springs
Receiving Water Type	Inland surface water

A. Amedee Geothermal Venture I (hereinafter Discharger) is the operator of Amedee Geothermal Power Plant (hereinafter Facility), a geothermal power production plant. Jack and Margaret Humphrey own the property on which the Facility is located. The property is leased to Mr. Matti Ripatti and subleased to the Discharger.

For the purposes of this Order, references to the “discharger” or “permittee” in applicable federal and state laws, regulations, plans, or policy are held to be equivalent to references to the Discharger herein.

B. The Facility discharges wastewater to a natural channel that historically drained Amedee Hot Springs, a water of the United States, within the Susan River Hydrologic Area. The Discharger was previously regulated by Order R6T-2009-0007 and National Pollutant Discharge Elimination System (NPDES) Permit No. CA0103055 adopted on January 14, 2009 and expires on January 14, 2014. Attachment B provides a map of the area around the Facility. Attachment C provides a flow schematic of the Facility.

C. The Discharger filed a report of waste discharge and submitted an application for reissuance of its WDRs and NPDES permit on July 9, 2013. The application was deemed complete on **August 10, 2013**.

II. FACILITY DESCRIPTION

The Facility is located in Lassen County, California, approximately 15 miles east of the City of Susanville. It lies within Section 8, T28N, R16E, MDB&M near the Amedee Hot Springs in Honey Lake Valley approximately one mile from Honey Lake, as shown in Attachment B.

The Facility was placed into operation in 1988, and produces electricity for sale to Pacific Gas & Electric. Electricity is produced by extracting geothermal groundwater and transferring the energy from the geothermal fluid via a heat exchanger to a secondary working fluid for use in a conventional Rankine cycle binary power plant. The Facility includes two units; one equipped with an induction generator that utilizes groundwater from the NorCal-1 well and one equipped with a synchronous generator that utilizes groundwater from the NorCal-2 well. Each unit has a total net output of 1 megawatt (MW). The maximum design production flow rate is 3,900 gallons per minute (GPM) or 5.616 million gallons per day (MGD).

The spent geothermal fluid is discharged through Discharge Point 001 after transferring its heat energy to the power plant's working fluid. No chemicals are added to the flow by the Discharger (e.g., for scale control or to prevent pipe fouling). Attachment C provides a flow schematic of the production well at the Facility.

During the term of Order R6T-2009-0007, the Facility was offline for 26 months out of a total of 54 months. The reasons for these outages were caused by a series of events following the Lassen Municipal Utility District's (LMUD) downgrade of a 34.5 kilovolt (kV) transmission line to a 12.47 kV distribution line. Immediately after the line was changed, the Facility suffered an over-speed accident destroying the synchronous generator. After rebuilding the plant in 2010, the Facility suffered another outage due to a blown fuse in an LMUD transformer. The blown fuse was not repaired for several months and the geothermal reservoir returned to an artesian state destroying the NorCal-2 well. The Facility was brought back into operation in late October 2011 using the NorCal-1 well. While the reservoir was pumped back down, a concrete basement was poured around the NorCal-2 well and drain pipes were installed from the well to the nearest natural drain channel so if the Facility were to go off line again, the geothermal groundwater would simply drain to this natural channel. This minor modification was implemented by the Facility to avoid endangering the electrical equipment near NorCal-2.

The Facility operated for a year when the NorCal-2 well pump failed in October 2012. The pump from NorCal-2 was rebuilt and in January 2013, while installing this pump, the well crew accidentally dropped the pump down the well. The well crew made minor repairs and reinstalled the pump in March 2013. After a month of operation in April 2013, this pump failed. Subsequently the Facility had the pump analyzed and repaired, however due to the recent LMUD transmission line downgrade, the NorCal-2 well pump is not being used at this time. The Facility is currently operating using only the NorCal-1 well for power production, producing up to 0.9 MW using an average production flow rate of 1,500 GPM (2.16 MGD).

In summary, the Facility was off-line and not discharging geothermal fluid during the following periods during the term of Order R6T-2009-0007:

November 2009 – October 2010

March 2011 – September 2011

November 2012 – July 2013

During normal operations, approximately 200 GPM (0.28 MGD) of geothermal fluid is not discharged directly to the receiving waters through Discharge Point 001 and is instead diverted for use as process cooling water as shown in Attachment C. The process cooling water is cooled through spray evaporation in earthen cooling ponds prior to reuse in the Facility. In the past, the cooling ponds were equipped to allow the release of geothermal fluid from Discharge Point 002 to Amedee Hot Springs. During the term of Order R6T-2009-0007, the Facility dammed the discharge point from the spray cooling ponds (Discharge Point 002) so as to eliminate any possible discharges (note however that although no discharge occurs from the spray cooling ponds, some geothermal fluid is lost to evaporation and through groundwater infiltration). As discharges to Amedee Hot Springs from the spray cooling ponds no longer are possible, this permit does not authorize discharges from Discharge Point 002.

A. Description of Wastewater Treatment and Controls

The geothermal fluid discharged from the power plant through Discharge Point 001 is not treated prior to discharge.

B. Discharge Points and Receiving Waters

The Facility is located near the northeast margin of Honey Lake. The Honey Lake Valley Basin is a portion of the Basin and Range Geomorphic Province, and is situated between the granitic Sierra Nevada mountain range to the southwest and the basaltic (volcanic) Modoc Plateau to the north. Local earthquake faults in the vicinity of the Facility reportedly trend in a north-northwest direction. Honey Lake is a relatively shallow terminal remnant of Lake Lahontan, which formerly covered vast portions of the region. At Amedee, the granitic basement rocks are overlain by volcanic rock and sedimentary deposits. The ground waters of Honey Lake Valley are recharged by precipitation, snowmelt, and seepage from streams and irrigation. Geothermal waters are related to the fault system, and are reportedly associated with a deep aquifer underlying a non-thermal aquifer.

Prior to the Facility operations, the geothermal waters discharged to the land surface in the form of hot springs, with six main groups of springs distributed along a 0.75-mile fault line passing through the center of the Facility. Due to the rate of groundwater withdrawal, water no longer flows naturally to the land surface, and wetlands associated with the former hot springs have been affected by a drop in groundwater elevations from the Facility operations. To the extent that other water to sustain the natural wetlands is very limited, the wetland area functionality is dependent on the Facility discharge.

The discharge point for the effluent to the receiving water channel are located at latitude 40˚ 18’ 2.97” N and longitude 120˚ 11’ 43.41” W (Discharge Point 001), within the *Susan River Hydrologic Area* (Department of Water Resources Hydrologic Unit No. 637.20). The discharge from Discharge Point 001 flows into Honey Lake approximately one mile from the Facility.

C. Summary of Existing Requirements and Self-Monitoring Report (SMR) Data

Effluent limitations contained in the existing Order for discharges from Discharge Point 001 (Monitoring Location EFF-001) and representative monitoring data from the term of the previous Order are presented in the table below. It should be noted that there were no discharges from Discharge Point 002 during the term of Order R6T-2009-0007.

Table F-2. Historic Effluent Limitations and Monitoring Data – Discharge Point 001

Parameter	Units	Effluent Limitation		Monitoring Data (From Nov 2009 – May 2013)			
		Average Monthly	Maximum Daily	Date	Influent	Effluent	Effluent > Influent?
Flow	MGD	--	5.616	--	--	NR[1]	--
Conventional Pollutants							
Arsenic, Total Recoverable	µg/L	[3]	--	5/18/2009	145 µg/L	157 µg/L	Yes
				11/18/2009[2]	180 µg/L	172 µg/L	No
				5/17/2010[2]	144 µg/L	148 µg/L	Yes
				November 2010	180 µg/L	180 µg/L	No
				5/9/2011[2]	148 µg/L	154 µg/L	Yes
				11/10/2011	138 µg/L	140 µg/L	Yes
				May 2012	165 µg/L	163 µg/L	No
				5/1/2013[2]	171 µg/L	169 µg/L	No
	lbs/day	[3]	--	--	NR[1]	NR[1]	--
Non-Conventional Pollutants							
Boron, Total Recoverable	µg/L	[3]	--	5/18/2009	3,400 µg/L	3,700 µg/L	Yes
				11/18/2009[2]	3,700 µg/L	3,700 µg/L	No
				5/17/2010[2]	3,400 µg/L	3,500 µg/L	Yes
				November 2010	3,500 µg/L	3,470 µg/L	No
				5/9/2011[2]	3,000 µg/L	3,100 µg/L	Yes
				11/10/2011	3,400 µg/L	3,500 µg/L	Yes
				May 2012	3,400 µg/L	3,600 µg/L	Yes
				5/1/2013[2]	3,400 µg/L	3,400 µg/L	No
	lbs/day	[3]	--	--	NR[1]	NR[1]	--
Molybdenum, Total Recoverable	µg/L	[3]	--	5/18/2009	62 µg/L	67 µg/L	Yes
				11/18/2009[2]	66 µg/L	63 µg/L	No
				5/17/2010[2]	60 µg/L	61 µg/L	Yes
				November 2010	60 µg/L	60 µg/L	No
				5/9/2011[2]	59 µg/L	62 µg/L	Yes
				11/10/2011	60 µg/L	62 µg/L	Yes
				May 2012	65 µg/L	65 µg/L	No
				5/1/2013[2]	67 µg/L	66 µg/L	No
	lbs/day	[3]	--	--	NR[1]	NR[1]	--

[1] NR – Not Reported. Although average monthly flows were provided in the Report of Waste Discharge and monthly mass can be calculated.
[2] The Facility was offline and not producing power on the date of sample collection.
[3] The concentration and mass in the effluent shall not be greater than the concentration and mass in the intake.

D. Compliance Summary

Monitoring data from May 2009 to May 2013 indicated that the Discharger has complied with the effluent limitations of Order R6T-2009-0007 except for the effluent limitation exceedances listed in the following table.

Table F-3. Compliance Summary – Discharge Point 001

Date	Pollutant	Influent (µg/L)	Effluent (µg/L)	Effluent Limitation
5/18/2009	Arsenic, Total Recoverable	145	157	[1]
5/18/2009	Boron, Total Recoverable	3,400	3,700	[1]
5/18/2009	Molybdenum, Total Recoverable	62	67	[1]
5/17/2010	Arsenic, Total Recoverable	144	148	[1]
5/17/2010	Boron, Total Recoverable	3,400	3,500	[1]
5/17/2010	Molybdenum, Total Recoverable	60	61	[1]
5/9/2011	Arsenic, Total Recoverable	148	154	[1]
5/9/2011	Boron, Total Recoverable	3,000	3,100	[1]
5/9/2011	Molybdenum, Total Recoverable	59	62	[1]
11/10/2011	Arsenic, Total Recoverable	138	140	[1]
11/10/2011	Boron, Total Recoverable	3,400	3,500	[1]
11/10/2011	Molybdenum, Total Recoverable	60	62	[1]
May 2012	Boron, Total Recoverable	3,400	3,600	[1]

[1] The concentration and mass in the effluent shall not be greater than the concentration and mass in the intake.

The Discharger was cited twice (January 16, 2010 and January 16, 2011) for not reporting flow data. The effluent limitation for flow is 5.616 MGD, however, compliance with this limitation could not be determined due to lack of reported effluent flow data.

E. Planned Changes – Not Applicable

III. APPLICABLE PLANS, POLICIES, AND REGULATIONS

The requirements contained in this Order are based on the requirements and authorities described in this section.

A. Legal Authorities

This Order serves as WDRs pursuant to article 4, chapter 4, division 7 of the California Water Code (commencing with section 13260). This Order is also issued pursuant to section 402 of the federal Clean Water Act (CWA) and implementing regulations adopted by the USEPA and chapter 5.5, division 7 of the Water Code (commencing with section 13370). It shall serve as an NPDES permit for point source discharges from this facility to surface waters.

B. California Environmental Quality Act (CEQA)

Under Water Code section 13389, this action to adopt an NPDES permit is exempt from the provisions of Chapter 3 of CEQA, (commencing with section 21100) of Division 13 of the Public Resources Code.

C. State and Federal Laws, Regulations, Policies, and Plans

1. **Water Quality Control Plan.** The Lahontan Water Board adopted a *Water Quality Control Plan for the Lahontan Region* (hereinafter Basin Plan) on March 31, 1995 that designates beneficial uses, establishes water quality objectives, and contains implementation programs and policies to achieve those objectives for all waters addressed through the plan. In addition, the Basin Plan implements State Water Board

Resolution No. 88-63, which established State policy that all waters, with certain exceptions, should be considered suitable or potentially suitable for municipal or domestic supply (MUN). However, the Basin Plan does not designate municipal uses for Amedee Hot Springs based on a Use Attainability Analysis and USEPA-approved Basin Plan amendment that removed this potential surface water use after consideration of Resolution No. 88-63 criteria and federal water quality standards regulations. Thus, the beneficial uses applicable for Amedee Hot Springs in the Susan River Hydrologic Area are as follows:

Table F-4. Surface Water Basin Plan Beneficial Uses

Discharge Point	Receiving Water Name	Beneficial Use(s)
001	Amedee Hot Springs	Agricultural Supply (AGR); Groundwater Recharge (GWR); Freshwater Replenishment (FRSH); Water Contact Recreation (REC-1); Non-Contact Water Recreation (REC-2); Commercial and Sport Fishing (COMM); Cold Freshwater Habitat (COLD); Warm Freshwater Habitat (WARM); Wildlife Habitat (WILD).

The Basin Plan also identifies beneficial uses of ground water that are applicable to all ground water in the Lahontan Region. Beneficial uses of specific ground water basins in the Lahontan Region are designated in Table 2-2 of the Basin Plan. The Facility is located within the Honey Lake Valley Basin. Unless otherwise designated by the Lahontan Water Board, all ground waters are considered suitable, or potentially suitable, for MUN. The beneficial uses applicable to ground water in the Honey Lake Valley Basin are as follows.

Table F-5. Ground Water Basin Plan Beneficial Uses

Basin Name	Beneficial Use(s)
Honey Lake Valley Basin	Agricultural Supply (AGR); Freshwater Replenishment (FRSH); Industrial Service Supply (IND); Municipal and Domestic Supply (MUN); Wildlife Habitat (WILD).

2. **National Toxics Rule (NTR) and California Toxics Rule (CTR).** USEPA adopted the NTR on December 22, 1992, and later amended it on May 4, 1995 and November 9, 1999. About forty criteria in the NTR applied in California. On May 18, 2000, USEPA adopted the CTR. The CTR promulgated new toxics criteria for California and, in addition, incorporated the previously adopted NTR criteria that were applicable in the state. The CTR was amended on February 13, 2001. These rules contain federal water quality criteria for priority pollutants.

3. **State Implementation Policy** On March 2, 2000, the State Water Board adopted the *Policy for Implementation of Toxics Standards for Inland Surface Waters, Enclosed Bays, and Estuaries of California* (State Implementation Policy or SIP). The SIP became effective on April 28, 2000, with respect to the priority pollutant criteria promulgated through the NTR and to the priority pollutant objectives established in the Basin Plan. The SIP became effective on May 18, 2000, with respect to the priority pollutant criteria promulgated through the CTR. The State Water Board adopted amendments to the SIP on February 24, 2005, that became effective on July 13, 2005. The SIP establishes implementation provisions for priority pollutant criteria and objectives and provisions for chronic toxicity control. Requirements of this Order implement the SIP.

4. **Alaska Rule.** On March 30, 2000, USEPA revised its regulations that specifies when new and revised state and tribal water quality standards become effective for CWA purposes (65 Fed. Reg. 24641 [April 27, 2000]), new and revised standards submitted to USEPA after May 30, 2000, must be approved by USEPA before being used for CWA purposes. The final rule also provides that standards already in effect and submitted to USEPA by May 30, 2000, may be used for CWA purposes, whether or not approved by USEPA.

5. **Antidegradation Policy.** Federal regulation 40 C.F.R. section 131.12 requires that the state water quality standards include an antidegradation policy consistent with the federal policy. The State Water Board established California's antidegradation policy in State Water Board Resolution 68-16 ("Statement of Policy with Respect to Maintaining High Quality of Waters in California"). Resolution 68-16 is deemed to incorporate the federal antidegradation policy where the federal policy applies under federal law. Resolution 68-16 requires that existing water quality be maintained unless degradation is justified based on specific findings. The Lahontan Water Board's Basin Plan implements, and incorporates by reference, both the State and federal antidegradation policies. The permitted discharge must be consistent with the antidegradation provision of 40 C.F.R. section 131.12 and State Water Board Resolution 68-16.

6. **Anti-Backsliding Requirements.** Sections 402(o) and 303(d)(4) of the CWA and federal regulations at 40 C.F.R. section 122.44(l) restrict backsliding in NPDES permits. These anti-backsliding provisions require that effluent limitations in a reissued permit must be as stringent as those in the previous permit, with some exceptions in which limitations may be relaxed.

7. **Endangered Species Act Requirements.** This Order does not authorize any act that results in the taking of a threatened or endangered species or any act that is now prohibited, or becomes prohibited in the future, under either the California Endangered Species Act (Fish and Game Code, §§ 2050 to 2097) or the Federal Endangered Species Act (16 U.S.C.A. §§ 1531 to 1544). This Order requires compliance with effluent limits, receiving water limits, and other requirements to protect the beneficial uses of waters of the state. The Discharger is responsible for meeting all requirements of the applicable Endangered Species Act.

D. Impaired Water Bodies on CWA 303(d) List

In October 2011, USEPA approved a revised list of impaired water bodies prepared pursuant to CWA section 303(d), which requires identification of specific water bodies where it is expected that water quality standards will not be met after implementation of technology-based effluent limitations on point sources. Where it has not done so already, the Lahontan Water Board plans to adopt Total Maximum Daily Loads (TMDLs) for pollutants on the 303(d) list. TMDLs establish wasteload allocations for point sources and load allocations for non-point sources, and are established to achieve the water quality standards for the impaired water bodies.

Amedee Hot Springs is not listed as an impaired water body. However, Honey Lake, which receives the discharge from the Facility, is on the 2010 303(d) list as impaired for arsenic, salinity/TDS/chlorides, and metals. The source of the impairment is from natural sources to Honey Lake. The proposed TMDLs for these constituents are not scheduled for completion until 2019, although additional studies are needed to verify whether impairment exists and whether a TMDL is needed.

E. Other Plans, Polices and Regulations – Not Applicable

IV. RATIONALE FOR EFFLUENT LIMITATIONS AND DISCHARGE SPECIFICATIONS

The CWA requires point source dischargers to control the amount of conventional, non-conventional, and toxic pollutants that are discharged into the waters of the United States. The control of pollutants discharged is established through effluent limitations and other requirements in NPDES permits. There are two principal bases for effluent limitations in the Code of Federal Regulations: 40 C.F.R. section 122.44(a) requires that permits include applicable technology-based limitations and standards; and 40 C.F.R. section 122.44(d) requires that permits include water quality-based effluent limitations to attain and maintain applicable numeric and narrative water quality criteria to protect the beneficial uses of the receiving water.

A. Discharge Prohibitions

The discharge prohibitions are based on the requirements of the Basin Plan (section 4.1), and the provisions previously established in Order R6T-2009-0007.

B. Technology-Based Effluent Limitations

1. Scope and Authority

Section 301(b) of the CWA and implementing USEPA permit regulations at 40 C.F.R. Section 122.44 require that permits include conditions meeting applicable technology-based requirements at a minimum, and any more stringent effluent limitations necessary to meet applicable water quality standards. The discharge authorized by this Order must meet minimum federal technology-based requirements based on Best Professional Judgment (BPJ) in accordance with 40 C.F.R. section 125.3.

The CWA requires that technology-based effluent limitations be established based on several levels of controls:

a. Best practicable treatment control technology (BPT) represents the average of the best existing performance by well-operated facilities within an industrial category or subcategory. BPT standards apply to toxic, conventional, and non-conventional pollutants.

b. Best available technology economically achievable (BAT) represents the best existing performance of treatment technologies that are economically achievable within an industrial point source category. BAT standards apply to toxic and non-conventional pollutants.

c. Best conventional pollutant control technology (BCT) represents the control from existing industrial point sources of conventional pollutants including biochemical oxygen demand (BOD), total suspended solids (TSS), fecal coliform, pH, and oil and grease. The BCT standard is established after considering a two-part reasonableness test. The first test compares the relationship between the costs of attaining a reduction in effluent discharge and the resulting benefits. The second test examines the cost and level of reduction of pollutants from the discharge from publicly owned treatment works to the cost and level of reduction of such pollutants from a class or category of industrial sources. Effluent limitations must be reasonable under both tests.

d. New source performance standards (NSPS) represent the best available demonstrated control technology standards. The intent of NSPS guidelines is to set limitations that represent state-of-the-art treatment technology for new sources.

The CWA requires USEPA to develop effluent limitations, guidelines and standards (ELGs) representing application of BPT, BAT, BCT, and NSPS. Section 402(a)(1) of the CWA and 40 C.F.R. section 125.3 authorize the use of BPJ to derive technology-based effluent limitations on a case-by-case basis where ELGs are not available for certain

industrial categories and/or pollutants of concern. Where BPJ is used (i.e., where no applicable ELGs exist), the Lahontan Water Board must consider specific factors outlined in 40 C.F.R. section 125.3.

2. Applicable Technology-Based Effluent Limitations

There are no ELGs applicable to discharges associated with geothermal power plants. Therefore technology-based effluent limitations will be established for Discharge Point 001 based on BPJ, as described further below

a. Flow. Order R6T-2009-0007 established a maximum design flow rate up to 5.616 MGD, the equivalent of 3,900 GPM. As stated above, technology-based effluent limitations are established on a case-by-case basis using BPJ. Therefore, a technology-based effluent limitation for flow is established in this Order based on the maximum design flow rate of 5.616 MGD.

b. Best Management Practices Plan. Due to the lack of national ELGs for discharges from the geothermal power plant and pursuant to 40 C.F.R. section 122.44(k), the Discharger is required to develop and implement a Best Management Practices (BMP) Plan. The BMP Plan, based on BPJ, will serve as the equivalent of technology-based effluent limitations, in order to carry out the purposes and intent of the CWA. The Discharger is specifically required to develop and implement a BMP Plan in accordance with the requirements specified in Attachment G. The purpose of the BMP Plan will be to prevent the introduction of chemicals or other substances into the Facility, and prevent the addition of pollutants from other non-permitted process waters, spills, or other potential sources of pollutants at the Facility. The plan shall include site-specific plans and procedures implemented and/or to be implemented to prevent pollutants from being discharged to the Amedee Hot Springs.

Summary of Technology-based Effluent Limitations
Discharge Point 001

Table F-6. Summary of Technology-based Effluent Limitations

Parameter	Units	Effluent Limitations			
		Average Monthly	Maximum Daily	Instantaneous Minimum	Instantaneous Maximum
Flow	MGD	--	5.616	--	--

C. Water Quality-Based Effluent Limitations (WQBELs)

1. Scope and Authority

CWA Section 301(b) and 40 C.F.R. section 122.44(d) require that permits include limitations more stringent than applicable federal technology-based requirements where necessary to achieve applicable water quality standards.

Section 122.44(d)(1)(i) of 40 C.F.R. requires that permits include effluent limitations for all pollutants that are or may be discharged at levels that have the reasonable potential to cause or contribute to an exceedance of a water quality standard, including numeric and narrative objectives within a standard. Where reasonable potential has been established for a pollutant, but there is no numeric criterion or objective for the pollutant, water quality-based effluent limitations (WQBELs) must be established using: (1) USEPA criteria guidance under CWA section 304(a), supplemented where necessary by

other relevant information; (2) an indicator parameter for the pollutant of concern; or (3) a calculated numeric water quality criterion, such as a proposed state criterion or policy interpreting the state's narrative criterion, supplemented with other relevant information, as provided in section 122.44(d)(1)(vi).

The process for determining reasonable potential and calculating WQBELs when necessary is intended to protect the designated uses of the receiving water as specified in the Basin Plan, and achieve applicable water quality objectives and criteria that are contained in other state plans and policies, or any applicable water quality criteria contained in the CTR and NTR.

2. Applicable Beneficial Uses and Water Quality Criteria and Objectives

The Basin Plan designates beneficial uses, establishes water quality objectives, and contains implementation programs and policies to achieve those objectives for all waters addressed through the plan.

The federal CWA section 101(a)(2), states: "*it is the national goal that wherever attainable, an interim goal of water quality which provides for the protection and propagation of fish, shellfish, and wildlife, and for recreation in and on the water be achieved by July 1, 1983.*" Federal Regulations, developed to implement the requirements of the CWA, create a rebuttable presumption that all waters be designated as fishable and swimmable. Federal Regulations, 40 C.F.R. sections 131.2 and 131.10, require that all waters of the State regulated to protect the beneficial uses of public water supply, protection and propagation of fish, shell fish and wildlife, recreation in and on the water, agricultural, industrial and other purposes including navigation. Section 131.3(e), 40 C.F.R., defines existing beneficial uses as those uses actually attained after 28 November 1975, whether or not they are included in the water quality standards. Federal Regulation, 40 C.F.R. section 131.10 requires that uses be obtained by implementing effluent limitations, requires that all downstream uses be protected and states that in no case shall a state adopt waste transport or waste assimilation as a beneficial use for any waters of the United States.

a. Receiving Water and Beneficial Uses

The Facility discharges wastewater to the Amedee Hot Springs, a water of the United States. The beneficial uses applicable to the Amedee Hot Springs are presented in Table F-4.

b. Water Quality Objectives

The water quality objectives applicable to the receiving water for this discharge are from the Basin Plan; the CTR, established by USEPA at 40 C.F.R. 131.38; and the NTR, established by USEPA at 40 C.F.R. 131.36. Some pollutants have water quality objectives established by more than one of these sources.

i. Basin Plan. The Basin Plan specifies numeric and narrative water quality objectives for pollutants in order to protect beneficial uses. The narrative toxicity objective states, "*All waters shall be maintained free of toxic substances in concentrations that are toxic to, or that produce detrimental physiological responses in human, plant, animal, or aquatic life.*"

The Chemical Constituents provisions in the Basin plan also states, "*Water designated as AGR shall not contain concentrations of chemical constituents in amounts that adversely affect the water for beneficial uses (i.e., agricultural purposes).*"

Effluent limitations and provisions contained in this Order are designed to implement these objectives, based on available information.

ii. **CTR**. The CTR specifies numeric aquatic life criteria for 23 priority toxic pollutants and numeric human health criteria for 57 priority toxic pollutants. These criteria apply to all inland surface waters and enclosed bays and estuaries. Human health criteria are further identified as for "water and organisms" or for "organisms only."

iii. **NTR**. The NTR establishes numeric aquatic life criteria for selenium and numeric human health criteria for 33 toxic organic pollutants.

3. Determining the Need for WQBELs

Assessing whether a pollutant has reasonable potential to exceed a water quality objective in the water body is the fundamental step in determining whether or not a WQBEL is required.

a. Reasonable Potential Analysis Methodology

According to SIP section 1.3, the RPA begins with identifying the observed maximum effluent concentration (MEC) for each pollutant based on effluent concentration data. There are three triggers in determining reasonable potential:

i. Trigger 1 is activated if the MEC is greater than or equal to the lowest applicable water quality objective (MEC $\geq$ water quality objective), which has been adjusted, if appropriate, for pH, hardness, and translator data. If the MEC is greater than or equal to the adjusted water quality objective, then that pollutant has reasonable potential, and a WQBEL is required.

ii. Trigger 2 is activated if the observed maximum ambient background concentration (B) is greater than the adjusted water quality objective (B > water quality objective) and the pollutant is detected in any of the effluent samples.

iii. Trigger 3 is activated if a review of other information determines that a WQBEL is required to protect beneficial uses, even though both MEC and B are less than the water quality objective.

In order to maintain consistency in methodology for permitting discharges of various constituents, the Lahontan Water Board used the same procedures required by the SIP for CTR constituents to evaluate reasonable potential and, where necessary, develop WQBELs for non-CTR constituents. For constituents with no promulgated numeric water quality criteria or objectives, the Lahontan Water Board interpreted narrative objectives from the Basin Plan to establish the basis for reasonable potential and effluent limitation calculations.

b. Data and Information Used for the RPA

The following describes the data used to perform an RPA for discharges from Discharge Point 001.

i. **Effluent Data.** The effluent monitoring data collected by the Discharger during the term of Order R6T-2009-0007 and the nature of the discharge from Discharge Point 001 were analyzed to determine if the discharge has reasonable potential. The RPA for Discharge Point 001 is based on effluent monitoring data the Discharger collected from November 2009 through May 2013.

ii. **Hardness.** Some freshwater metal objectives are hardness dependent. The lower the hardness, the more stringent the resulting criterion is. Hardness data were collected by the Discharger during the term of Order R6T-2009-0007, and ranged from 39.9 mg/L (as $CaCO_3$) to 69.9 mg/L (as $CaCO_3$). The low end of the range was conservatively used to determine the objectives for this Order.

iii. **Ambient Background Data.** The ambient receiving waters for the discharges are remnants of the former Amedee Hot Springs, and associated wetlands and channels on the margins of, or terminating at, Honey Lake. As discussed in Section II.B of this Fact Sheet, the historic, natural discharge from the Amedee Hot Springs has ceased since pumping from the geothermal aquifer commenced. Therefore no upstream (i.e., ambient background) water exists. Order R6T-2009-0007 did however require monitoring of the influent, which is considered representative of the natural geothermal fluid prior to heat exchange within the Facility. This influent data will be used to represent ambient background for purposes of determining whether a reasonable potential exists based on Trigger 2.

iv. **Assimilative Capacity/Mixing Zone.** As no background receiving water exists (as described in the section above and in Section II.B of this Fact Sheet), no assimilative capacity or mixing zones exist for the discharges from the Facility.

c. **Reasonable Potential Analysis.** The MECs and the most stringent applicable water quality objectives used in the RPA are presented in the following table, along with the RPA results for each pollutant. Reasonable potential was not determined for all pollutants because there are no water quality objectives for all pollutants, and monitoring data are unavailable for others. Based on a review of the influent and effluent data collected during the term of the previous order (i.e., January 2009 through December 2013), the pollutants that exhibit reasonable potential by Trigger 1 are arsenic, boron, mercury, and molybdenum; copper, lead and zinc exhibit reasonable potential by Trigger 2.

Table F-7. Reasonable Potential Analysis Summary for Discharge Point 001

CTR #	Priority Pollutants	Governing Water Quality Objective (µg/L)	MEC or Minimum DL[(1)(2)] (µg/L)	Maximum Background or Minimum DL[(1)(2)] (µg/L)	RPA Results[(3)]
1	Antimony	4300	2	4	No Limit
2	Arsenic	150	172	180	Limit Required
3	Beryllium	No Criteria	<0.2	<0.2	Undetermined
4	Cadmium	1.2	0.6	<0.2	No Limit
5a	Chromium (III)	97.53	<1.0	2.0	No Limit
5b	Chromium (VI)	11.43	<10	<10	No Limit
6	Copper	4.25	3	168	Limit Required
7	Lead	0.99	0.9	<4.0	No Limit
8	Mercury	0.05	0.15	0.25	Limit Required
9	Nickel	23.98	<1.0	22	No Limit
10	Selenium	5	<2.0	<2	No Limit
11	Silver	0.84	<1.0	<1.0	No Limit
12	Thallium	6.3	<0.2	2.1	No Limit
13	Zinc	55.01	30	5570	Limit Required
14	Cyanide	5.2	<4.0	<4.0	No Limit
15	Asbestos	No Criteria	Not Available	Not Available	Undetermined
16	2,3,7,8-TCDD	1.4E-08	Not Available	Not Available	Undetermined

CTR #	Priority Pollutants	Governing Water Quality Objective (µg/L)	MEC or Minimum DL[(1)(2)] (µg/L)	Maximum Background or Minimum DL[(1)(2)] (µg/L)	RPA Results[(3)]
	Dioxin TEQ	1.4E-08	Not Available	Not Available	Undetermined
17	Acrolein	780	<5.0	<20.0	No Limit
18	Acrylonitrile	0.66	<2.0	<2.0	No Limit
19	Benzene	71	<0.5	<0.5	No Limit
20	Bromoform	360	<0.5	<0.5	No Limit
21	Carbon Tetrachloride	4.4	<0.5	<0.5	No Limit
22	Chlorobenzene	21000	<0.5	<0.5	No Limit
23	Chlorodibromomethane	34	<0.5	0.5	No Limit
24	Chloroethane	No Criteria	<0.5	<0.5	Undetermined
25	2-Chloroethylvinyl ether	No Criteria	<10	<10	Undetermined
26	Chloroform	No Criteria	<0.5	<0.5	Undetermined
27	Dichlorobromomethane	46	<0.5	0.5	No Limit
28	1,1-Dichloroethane	No Criteria	<0.5	<0.5	Undetermined
29	1,2-Dichloroethane	99	<0.5	<0.5	No Limit
30	1,1-Dichloroethylene	3.2	<0.5	<0.5	No Limit
31	1,2-Dichloropropane	39	<0.5	<0.5	No Limit
32	1,3-Dichloropropylene	1700	<0.5	Not Available	Undetermined
33	Ethylbenzene	29000	<0.5	<0.5	No Limit
34	Methyl Bromide	4000	<1.0	<1.0	No Limit
35	Methyl Chloride	No Criteria	<0.5	<0.5	Undetermined
36	Methylene Chloride	1600	<0.5	<2.0	No Limit
37	1,1,2,2-Tetrachloroethane	11	<0.5	<0.5	No Limit
38	Tetrachloroethylene	8.9	<0.5	<0.5	No Limit
39	Toluene	200000	<0.5	<0.5	No Limit
40	1,2-Trans-Dichloroethylene	140000	<0.5	<0.5	No Limit
41	1,1,1-Trichloroethane	No Criteria	<0.5	<0.5	Undetermined
42	1,1,2-Trichloroethane	42	<0.5	<0.5	No Limit
43	Trichloroethylene	81	<0.5	<0.5	No Limit
44	Vinyl Chloride	525	<0.5	<0.5	No Limit
45	2-Chlorophenol	400	<2.0	<2.0	No Limit
46	2,4-Dichlorophenol	790	<2.0	<2.0	No Limit
47	2,4-Dimethylphenol	2300	<2.0	<2.0	No Limit
48	2-Methyl- 4,6-Dinitrophenol	765	<1.0	<1.0	No Limit
49	2,4-Dinitrophenol	14000	<5.0	<5.0	No Limit
50	2-Nitrophenol	No Criteria	<2.0	<2.0	Undetermined
51	4-Nitrophenol	No Criteria	<2.0	<2.0	Undetermined
52	3-Methyl 4-Chlorophenol	No Criteria	<2.0	<2.0	Undetermined
53	Pentachlorophenol	8.2	<2.0	<2.0	No Limit
54	Phenol	4600000	1.0	1.0	No Limit
55	2,4,6-Trichlorophenol	6.5	<1.0	<1.0	No Limit
56	Acenaphthene	2700	<1.0	<1.0	No Limit
57	Acenaphthylene	No Criteria	<1.0	<1.0	Undetermined
58	Anthracene	110000	<1.0	<1.0	No Limit
59	Benzidine	0.00054	<10	<10.0	No Limit
60	Benzo(a)Anthracene	0.049	<1.0	<1.0	No Limit
61	Benzo(a)Pyrene	0.049	<1.0	<1.0	No Limit
62	Benzo(b)Fluoranthene	0.049	<1.0	<1.0	No Limit
63	Benzo(ghi)Perylene	No Criteria	<1.0	<1.0	Undetermined
64	Benzo(k)Fluoranthene	0.049	<1.0	<1.0	No Limit
65	Bis(2-	No Criteria	<1.0	<1.0	Undetermined

CTR #	Priority Pollutants	Governing Water Quality Objective (µg/L)	MEC or Minimum DL[(1)(2)] (µg/L)	Maximum Background or Minimum DL[(1)(2)] (µg/L)	RPA Results[(3)]
	Chloroethoxy)Methane				
66	Bis(2-Chloroethyl)Ether	1.4	<1.0	<1.0	No Limit
67	Bis(2-Chloroisopropyl)Ether	170000	<1.0	<1.0	No Limit
68	Bis(2-Ethylhexyl)Phthalate	5.9	<2.0	5.0	No Limit
69	4-Bromophenyl Phenyl Ether	No Criteria	<1.0	<1.0	Undetermined
70	Butylbenzyl Phthalate	5200	<2.0	<2.0	No Limit
71	2-Chloronaphthalene	4300	<1.0	<1.0	No Limit
72	4-Chlorophenyl Phenyl Ether	No Criteria	<1.0	<1.0	Undetermined
73	Chrysene	0.049	<1.0	<1.0	No Limit
74	Dibenzo(a,h)Anthracene	0.049	<1.0	<1.0	No Limit
75	1,2-Dichlorobenzene	17000	<0.5	<0.5	No Limit
76	1,3-Dichlorobenzene	2600	<0.5	<0.5	No Limit
77	1,4-Dichlorobenzene	2600	<0.5	<0.5	No Limit
78	3,3 Dichlorobenzidine	0.08	<2.0	<2.0	No Limit
79	Diethyl Phthalate	120000	<1.0	<2.0	No Limit
80	Dimethyl Phthalate	2900000	<1.0	<1.0	No Limit
81	Di-n-Butyl Phthalate	12000	<2.0	<2.0	No Limit
82	2,4-Dinitrotoluene	9.1	<1.0	<1.0	No Limit
83	2,6-Dinitrotoluene	No Criteria	<1.0	<1.0	Undetermined
84	Di-n-Octyl Phthalate	No Criteria	<1.0	<1.0	Undetermined
85	1,2-Diphenylhydrazine	0.54	<1.0	<1.0	No Limit
86	Fluoranthene	370	<1.0	<1.0	No Limit
87	Fluorene	14000	<1.0	<1.0	No Limit
88	Hexachlorobenzene	0.00077	<1.0	<1.0	No Limit
89	Hexachlorobutadiene	50	<1.0	<1.0	No Limit
90	Hexachlorocyclopentadiene	17000	<1.0	<1.0	No Limit
91	Hexachloroethane	8.9	<1.0	<1.0	No Limit
92	Indeno(1,2,3-cd)Pyrene	0.049	<1.0	<1.0	No Limit
93	Isophorone	600	<1.0	<1.0	No Limit
94	Naphthalene	No Criteria	<1.0	<1.0	Undetermined
95	Nitrobenzene	1900	<1.0	<1.0	No Limit
96	N-Nitrosodimethylamine	8.1	<2.0	<2.0	No Limit
97	N-Nitrosodi-n-Propylamine	1.4	<1.0	<1.0	No Limit
98	N-Nitrosodiphenylamine	16	<1.0	<1.0	No Limit
99	Phenanthrene	No Criteria	<1.0	<2.0	Undetermined
100	Pyrene	11000	<1.0	<1.0	No Limit
101	1,2,4-Trichlorobenzene	No Criteria	<1.0	<1.0	Undetermined
102	Aldrin	0.00014	<0.005	<0.005	No Limit
103	Alpha-BHC	0.013	<0.005	<0.005	No Limit
104	Beta-BHC	0.046	<0.005	<0.005	No Limit
105	Gamma-BHC	0.063	<0.005	<0.005	No Limit
106	Delta-BHC	No Criteria	<0.005	<0.005	Undetermined
107	Chlordane	0.00059	<0.005	<0.005	No Limit
108	4,4'-DDT	0.00059	<0.005	<0.005	No Limit
109	4,4'-DDE (linked to DDT)	0.00059	<0.005	<0.005	No Limit
110	4,4'-DDD	0.00084	<0.005	<0.005	No Limit
111	Dieldrin	0.00014	<0.005	<0.005	No Limit
112	Alpha-Endosulfan	0.056	<0.005	<0.005	No Limit

CTR #	Priority Pollutants	Governing Water Quality Objective (µg/L)	MEC or Minimum DL[(1)(2)] (µg/L)	Maximum Background or Minimum DL[(1)(2)] (µg/L)	RPA Results[(3)]
113	beta-Endosulfan	0.056	<0.005	<0.005	No Limit
114	Endosulfan Sulfate	240	<0.005	<0.005	No Limit
115	Endrin	0.036	<0.005	<0.005	No Limit
116	Endrin Aldehyde	0.81	<0.005	<0.005	No Limit
117	Heptachlor	0.00021	<0.005	<0.005	No Limit
118	Heptachlor Epoxide	0.00011	<0.005	<0.005	No Limit
119-125	PCBs sum[4]	0.00017	<0.50	<0.50	No Limit
126	Toxaphene	0.0002	<0.01	<0.5	No Limit
--	Methyl-tert-butyl-ether	No Criteria	<5.0	<5.0	Undetermined
--	Styrene	No Criteria	<0.5	<0.5	Undetermined
--	Xylenes	No Criteria	<0.5	<1.0	Undetermined
--	Trichlorofluoromethane	No Criteria	<0.5	<2.0	Undetermined
--	Boron	750	3,700	3,700	Limit Required
--	Molybdenum	10	66	67	Limit Required

1 The MEC and maximum background concentration are the actual detected concentrations unless preceded by a "<" sign, in which case the value shown is the minimum detection level (DL).

2 The MEC or maximum background concentration is "Not Available" when there are no monitoring data for the constituent.

3 RPA Results = Limit Required, if MEC > WQO, B > WQO and MEC is detected, or Trigger 3;
= No Limit, if MEC and B are < WQO or all effluent data are undetected;
= Undetermined (Ud), if no criteria have been promulgated or there are insufficient data.

4. WQBEL Calculations

a. Pollutants That Did Not Demonstrate Reasonable Potential

WQBELs are not included in this Order for constituents that do not demonstrate reasonable potential or where it was undetermined whether WQBELs were necessary (e.g., where the reported detection levels are higher than the applicable criteria/objectives). However, monitoring during the term of this Order for those pollutants is required in accordance with Section 1.3 of the SIP. If concentrations of these constituents are found to have increased significantly, the Discharger will be required to investigate the sources of the increases. Remedial measures are required if the increases pose a threat to receiving water quality.

b. Pollutants with Reasonable Potential. This Order includes WQBELs for arsenic, boron, mercury, and molybdenum for discharges from Discharge Point 001. Although reasonable potential was indicated by Trigger 2 (the reported background concentration is greater than the governing water quality objective) for copper, lead and zinc, effluent limitations are not being established at this time. Although the reported background (i.e., influent) data for copper, lead and zinc indicate exceedance of applicable water quality objectives, the associated effluent concentrations taken at the same time were reported below analytical detection levels. As a result, it is uncertain whether the discharge itself would constitute a threat to downstream water quality in Amedee Hot Springs as the effluent concentrations are below applicable water quality objectives. Therefore effluent limitations are not being established at this time, however this Order will require continued monitoring of the geothermal fluid (i.e., influent) in order to evaluate the potential to exceed water quality objectives.

Except for removal of heat, the Discharger does not alter the geothermal fluid (i.e., ground water) that is eventually discharged to the Amedee Hot Springs. If the ground water was not withdrawn by the Facility it would naturally surface via a spring and flow naturally into the receiving water. Therefore, the Lahontan Water Board believes that intake water credits are applicable and appropriate for the discharge from the Facility.

i. SIP Intake Water Credit Requirements. SIP section 1.4.4 provides for intake water credits under specific circumstances. When met, a discharger may discharge a mass or concentration of a pollutant that is no greater than the mass or concentration found in its intake water (e.g., the discharger may add a mass of the pollutant to its waste stream if it also removes an equal or greater mass prior to discharge, resulting in no net addition of the pollutant). This Order provides intake water credits for arsenic, boron, mercury, and molybdenum discharges from Discharge Point 001 because doing so complies with the SIP requirements.

In accordance with Section 1.4.4 of the SIP, the Lahontan Water Board may consider pollutants in intake water on a pollutant-by-pollutant and discharge-by-discharge basis when establishing WQBELs provided that the discharger has demonstrated to the satisfaction of the Lahontan Water Board that five specified conditions are met. Order R6T-2009-0007 required the Discharger to develop and submit an Intake Water Credit Summary Report. After review of this report and available data, the Lahontan Water Board concurs that the discharge meets the conditions, as outlined in the SIP, for arsenic intake credits; specifically:

Condition 1. The observed maximum ambient background concentration, as determined in section 1.4.3.1 of the SIP, and the intake water concentration of the pollutant exceeds the most stringent applicable criterion/objective for that pollutant.

The following table represents influent data provided by the Discharger over the duration of Order R6T-2009-0007:

Table F-8. Comparison of Influent Pollutant Concentrations to Applicable Water Quality Objectives

Parameter	Sample Date[1]	Reported Influent Concentration (µg/L)	Most Stringent Objective (µg/L)
Arsenic, Total Recoverable	May 2009	145	150
	November 2009[1]	180	
	May 2010[1]	144	
	November 2010	180	
	May 2011[1]	148	
	November 2011	138	
	May 2012	165	
	May 2013[1]	171	
	July 2013[2]	188	

Parameter	Sample Date[1]	Reported Influent Concentration (µg/L)	Most Stringent Objective (µg/L)
Boron, Total Recoverable	May 2009	3400	750
	November 2009[1]	3700	
	May 2010[1]	3400	
	November 2010	3500	
	May 2011[1]	3000	
	November 2011	3400	
	May 2012	3400	
	May 2013[1]	3400	
	July 2013[2]	3700	
Mercury, Total Recoverable	May 2009	0.23	0.05
	November 2009[1]	0.111	
	May 2010[1]	0.25	
	November 2010	0.37	
	May 2011[1]	0.08	
	November 2011	1.88	
	May 2012	0.15	
	May 2013[1]	0.14	
	July 2013[2]	0.05	
Molybdenum, Total Recoverable	May 2009	62	10
	November 2009[1]	66	
	May 2010[1]	60	
	November 2010	60	
	May 2011[1]	59	
	November 2011	60	
	May 2012	65	
	May 2013[1]	67	

[1] The Facility was offline on the date samples were collected. This data is still considered representative of the influent to the Facility.

[2] Samples collected on this date are the results of discharges from the geothermal well that had returned to an artesian state due to the fact that the Facility had been off-line for an extended period of time. This data is still considered representative of the influent to the Facility.

Based on influent data provided by the Discharger, this condition is met because the observed maximum intake water concentration for each pollutant exceeds the most stringent water quality criterion/objective.

<u>Condition 2.</u> The intake water credits provided are consistent with any TMDL applicable to the discharge that has been approved by the Regional Water Board, State Water Board, and USEPA.

Amedee Hot Springs is not currently considered a water quality-limited segment requiring a TMDL. Honey Lake, to which Amedee Hot Springs is tributary to, is listed on the CWA Section 303(d) List of Water Quality Limited Segments requiring TMDLs, however the proposed TMDL for arsenic is not scheduled for completion until 2019. Arsenic in Honey Lake is known to originate from natural sources. Based on a past study contracted by the Lahontan Water Board, arsenic concentrations fluctuate based on flux from the sediments depending primarily on the ambient water levels, evaporation and dilution by runoff (*Analysis of the Effect of Arsenic, Boron, and Molybdenum in*

Water Discharges on Water Quality in Honey Lake, Ruschemeyer and Tchobanoglous, UC Davis 1989).

Condition 3. The intake water is from the same water body as the receiving water body. The discharger may demonstrate this condition by showing that:

a) the ambient background concentration of the pollutant in the receiving water, excluding any amount of the pollutant in the facility's discharge, is similar to that of the intake water;

b) there is a direct hydrological connection between the intake and discharge points;

c) the water quality characteristics are similar in the intake and receiving waters; and

d) the intake water pollutant would have reached the vicinity of the discharge point in the receiving water within a reasonable period of time and with the same effect had it not been diverted by the discharger.

As discussed under Condition 1, the ambient background concentration of each of the pollutants in the receiving water (that is, the local hot springs) is similar to that of the intake water (that is, produced water).

There is a direct and long-recognized hydrological connection between the Facility intake and natural hot springs along a fault zone hear the Facility. Historically, geothermal water rose from a deep reservoir (depth greater than 3,000 feet) and then discharged as hot springs at the land surface. Production from the Facility well diverts the upflowing geothermal water from its natural exit at the hot springs, which explains why the hot springs cease to flow during production from the well. If the well was to stop producing now, the hot springs at Amedee would reappear from the natural flow up the fault. So far as pollutant concentrations are concerned, the water quality characteristics are similar in the intake water (produced from the well) and receiving water (hot springs).

Given the very small estimated volume of the fault zone, the pollutants would have reached the vicinity of the discharge point in the receiving water (hot springs or Honey Lake) within a matter of months, and in a similar concentration, had it not been diverted by production of geothermal water for the Facility. The natural flow of geothermal water up the fault has been diverted from the hot springs, which consequently, have ceased to flow.

Condition 4. The facility does not alter the intake water pollutant chemically or physically in a manner that adversely affects water quality and beneficial uses.

As previously discussed in this Fact Sheet, except for removal of heat from the extracted ground water, the Facility does not alter the ground water that is eventually discharged to the receiving water by the addition of chemicals or other pollutants.

Condition 5. The timing and location of the discharge does not cause adverse effects on water quality and beneficial uses that would not occur if the intake water pollutant had been left in the receiving water body.

The timing and location of the discharge from the Facility does not cause adverse effects on water quality and beneficial uses that would not occur if the pollutants in the intake water had been left in the intake water body, because

(a) the hot springs will discharge water at a similar rate and at similar pollutant concentrations and (b) there are no municipal uses of the water for either the local hot springs or Honey Lake.

Therefore, the Lahontan Water Board will allow intake water credits for arsenic, boron, mercury and molybdenum. This credit is to offset elevated levels of these pollutants found in the intake water. As stated in Section 1.4.4 of the SIP, the Lahontan Water Board "may establish effluent limitations allowing the facility to discharge a mass and concentration of the intake water pollutant that is no greater than the mass and concentration in the facility's intake water ... so there is no net addition of the pollutant in the discharge compared to the intake water."

ii. **Calculation of Intake Water Credits for Discharge Point 001.** To qualify for an intake water credit, the effluent pollutant concentration must be less than or equal to the intake pollutant concentration. However, intake and effluent data collected on the same day may differ due to factors unrelated to Facility operations, such as sampling and laboratory analytical variability. Since the residence time of geothermal water from intake to discharge is of relatively short duration, samples taken on the same day should be representative of the same water (assuming the samples are collected within a reasonably short time from each other). As shown previously in Table F-2, variability between the influent and effluent occurred throughout the term of Order R6T-2009-0007; for the same pollutant there were times when the effluent concentrations were slightly higher than the influent concentrations, as well as instances when the influent concentrations were higher than effluent concentrations.

In order to account for the variability among the influent and effluent samples collected by the Discharger, the methodology for developing effluent limitations was revised. First, a Mann-Whitney non-parametric test was used to determine whether two independent groups of data, in this case the influent and effluent pollutant concentration, are drawn from the same distribution. The results of the analysis shows, with 95% confidence, that the data belonged to the same data set for arsenic, boron, mercury and molybdenum (i.e., the p-values were all greater than 0.05).

Because there is no statistical difference between the influent and effluent concentrations, the 99th percentile concentration of the available data from both the influent and effluent monitoring locations was calculated. The resulting 99th percentile value represents the upper range of the variability between intake and effluent pollutant concentrations due to sampling and analysis variability. When used as the basis for the effluent limitation, it results in an intake credit that captures the variability between influent and effluent data, and prevents the discharge of additional pollutant mass. A higher percentile might include extreme and possibly false values, which might mask a legitimate violation; a lower percentile might result in violations due to sample variability instead of the addition of pollutants. The calculated 99th percentile concentrations for

arsenic, boron, mercury and molybdenum, which will serve as the final effluent limitations that account for intake credits, are shown in the table below.[1]

Table F-9. Final Effluent Limitations for Discharge Point 001

Parameter	Units	Final Effluent Limitations (µg/L)	
		Average Monthly	Maximum Daily
Arsenic, Total Recoverable	µg/L	--	203
Boron, Total Recoverable	µg/L	--	3,934
Mercury, Total Recoverable	µg/L	--	0.6
Molybdenum, Total Recoverable	µg/L	--	69

40 C.F.R 122.45(d) requires, unless impracticable, that effluent limitations for continuous discharges be stated as maximum daily and average monthly effluent limitations. The method for deriving effluent limitations that account for pollutant concentrations in the intake to the Facility (i.e., intake credits) is based on a statistically based upper bound (99th percentile) of the influent and effluent data. As such, this upper bound estimate is used to evaluate whether the Discharger contributes pollutant mass or concentrations above those levels contained in the influent to the Facility. Therefore, compliance with a maximum daily effluent limitation is considered more appropriate for this discharge situation where intake credits are being applied.

5. Whole Effluent Toxicity (WET)

Order R6T-2009-0007 required the Discharger to monitor Discharge Point 001 for acute and chronic whole effluent toxicity (WET) twice; once during 2009 and once during 2010.

a. Acute Toxicity. The table below summarizes the results of the acute WET testing performed by the Discharger.

Table F-10. Acute WET Testing Results

Date	Fathead Minnow *Pimephales promelas*		Water Flea *Ceriodaphnia dubia*	
	% Survival	TUa	% Survival	TUa
May 19, 2009	92	0.53	95	0.41
June 15, 2010	100	0.0	100	0.0

The Basin Plan contains a narrative toxicity objective that states, "*All waters shall be maintained free of toxic substances in concentrations that produce detrimental physiological responses in human, plant, animal, or aquatic life.*" USEPA Region 9 provided guidance for the development of acute toxicity effluent limitations in the absence of numeric water quality objectives for toxicity in its document titled

[1] As shown in Table F-8, the influent data point for mercury from November 2011 (1.88 µg/L) was significantly higher than all other data points for mercury. Use of this data point results in a high coefficient of variation and calculated 99th percentile value. The next highest influent or effluent mercury concentration reported during the term of Order R6T-2009-0007 was 0.37 µg/L. Therefore for purposes of calculating a 99th percentile to serve as the basis for effluent limitations for mercury, this one data point (1.88 µg/L) was excluded from the data set.

"Guidance for NPDES Permit Issuance", dated February 1994. In section B.2. "Toxicity Requirements" (pgs. 14-15) it states that, "*In the absence of specific numeric water quality objectives for acute and chronic toxicity, the narrative criterion 'no toxics in toxic amounts' applies. Achievement of the narrative criterion, as applied herein, means that ambient waters shall not demonstrate for acute toxicity: 1) less than 90% survival, 50% of the time, based on the monthly median, or 2) less than 70% survival, 10% of the time, based on any monthly median.*" For purposes of evaluating the toxicity of the effluent from Discharge Point 001 the following criteria were used:

Acute Toxicity. Survival of aquatic organisms in 96-hour bioassays of undiluted waste shall be no less than:

Minimum for any one bioassay---------- 70%
Median for any three consecutive bioassays ---------- 90%

Based on the data reported by the Discharger, the discharge from Discharge Point 001 does not exceed the narrative criteria for acute toxicity. Therefore no effluent limitations for acute toxicity will be included in this Order. However, acute toxicity testing will be required twice during the 4th year of the permit term to ensure continued compliance with the narrative criteria for acute toxicity.

b. Chronic Toxicity. The table below summarizes the results of the chronic WET testing performed by the Discharger.

Table F-11. Chronic WET Testing Results

	Fathead Minnow		Water Flea		Green Algae
	Pimephales promelas		*Ceriodaphnia dubia*		*Selenastrum capricornutum*
Date	**Survival (TUc)**	**Growth (TUc)**	**Survival (TUc)**	**Reproduction (TUc)**	**Growth (TUc)**
May 19, 2009	1.0	1.0	1.0	>1.0	--
May 22, 2009	--	--	--	--	>1.0
June 15, 2010	1.0	1.0	1.0	1.0	--
June 17, 2010	--	--	--	--	>1.0

The Basin Plan contains a narrative toxicity objective that states, "*All waters shall be maintained free of toxic substances in concentrations that produce detrimental physiological responses in human, plant, animal, or aquatic life*." Order R6T-2009-0007 defined chronic toxicity as WET test results not exceeding 1.0 TUc based on the Basin Plan narrative toxicity water quality objective. As shown above, several chronic WET tests were reported with values >1.0 TUc, indicating the potential for chronic toxicity in the discharge from Discharge Point 001.

As described in Section IV.C.3 above, there are several pollutants (arsenic, copper, lead, and zinc) for which high concentrations were reported in the Facility intake (i.e., geothermal fluid) that exceed applicable aquatic life protection criteria/objectives. Therefore it is assumed that the cause of chronic toxicity in the discharge from the Facility is the high concentrations of these pollutants in the intake. Therefore it is anticipated that the Discharger would often be in non-compliance with any established chronic toxicity effluent limitations. Further, requiring additional or accelerated monitoring at this time would likely provide results similar to the data that has already been collected by the Discharger to date. Therefore this Order requires the Discharger to perform a special study to determine

whether the chronic toxicity is due to the Facility intake water (see further discussion in Section VI.B.2 of this Fact Sheet). Based on the results of this study, the Regional Water Board may reopen the permit to include requirements, including if necessary, effluent limitations, as a means to protect receiving waters from potential impacts on water quality and designated uses caused by discharges from the Facility.

D. Final Effluent Limitation Considerations

1. Anti-Backsliding Requirements

Sections 402(o) and 303(d)(4) of the CWA and federal regulations at 40 C.F.R. section 122.44(l) prohibit backsliding in NPDES permits. These anti-backsliding provisions require effluent limitations in a reissued permit to be as stringent as those in the previous permit, with some exceptions where limitations may be relaxed. Due to the high concentrations of arsenic, boron, and molybdenum in the geothermal fluid extracted for use in the Facility, Order R6T-2009-0007 included effluent limitations that required no net increase above the influent concentration and mass (i.e., effluent mass and concentration had to be less than the associated influent mass and concentration). This Order also includes effluent limitations that account for the high concentrations of these same pollutants in the geothermal fluid, as well as the inherent variability of sampling and analysis. The effluent limitations in this Order will continue to ensure that the Facility does not discharge pollutants in excess of what would be expected to be contained in the influent. Therefore all effluent limitations in this Order are considered at least as stringent as the effluent limitations in the previous Order.

2. Antidegradation Policies

Section 131.12 requires that the state water quality standards include an anti-degradation policy consistent with the federal policy. The State Water Board established California's antidegradation policy in State Water Board Resolution No. 68-16. Resolution No. 68-16 incorporates the federal antidegradation policy where the federal policy applies under federal law. Resolution No. 68-16 requires that existing water quality be maintained unless degradation is justified based on specific findings. The Regional Water Board's Basin Plan implements, and incorporates by reference, both the State and federal antidegradation policies.

This Order does not provide for an increase in the permitted design flow or allow for an increase in mass or concentration of any pollutant. As described further in Section IV.C.4.b, intake credits are being applied to the discharge from the Facility. As such, the effluent limitations included in this Order hold the Discharger to pollutant concentrations in their effluent that would be no higher than the mass or concentration of pollutants that would enter Amedee Hot Springs naturally. Therefore the continued discharge from the Facility will not cause or contribute to water quality impairment or water quality degradation.

It is also acknowledged that the Facility removes heat from the geothermal fluid to produce electricity and as a result discharges from the facility will be slightly cooler than what would occur naturally. According to the Discharger's Intake Water Credit Summary, the discharge of the cooled geothermal fluid to the Amedee Hot Springs is approximately 65ºC (150ºF); which is a reduction of approximately 15ºC (60ºF) from the temperature of the geothermal fluid as it is extracted. Since the discharge of the cooled geothermal fluid from the Facility has occurred since 1988, no further impacts to aquatic life from the continued discharge of the cooled geothermal fluid are expected in the Amedee Hot Springs.

From a broader perspective, any degradation that could occur as a result of discharges from the Facility is considered in the best interest of people of the State. The Facility provides energy without producing greenhouse gas emissions that contribute to climate change, and as described Section IV.C.4.b, the mass and concentration of any pollutant discharged are expected to occur even in the absence of the Facility. The discharge from the Facility also provides fresh water that supports wetland habitats and potentially reduces salinity in Honey Lake, where the discharge ultimately reaches.

Therefore, the issuance of this permit is consistent with the State's antidegradation policy.

3. Stringency of Requirements for Individual Pollutants

This Order contains both technology-based and water quality-based effluent limitations for individual pollutants. The technology-based effluent limitations consist of restrictions on flow from Discharge Point 001. Restrictions on flow are discussed in Section IV.B of this Fact Sheet. This Order's technology-based pollutant restrictions implement the minimum, applicable federal technology-based requirements.

This Order includes WQBELs for arsenic, boron, mercury, and molybdenum at Discharge Point 001. WQBELs have been scientifically derived to implement water quality objectives that protect beneficial uses. Both the beneficial uses and the water quality objectives have been approved pursuant to federal law and are the applicable federal water quality standards. The scientific procedures for calculating the WQBELs are based on the CTR-SIP, which was approved by USEPA on May 18, 2000. All beneficial uses and water quality objectives contained in the Basin Plan were approved under State law and submitted to and approved by USEPA prior to May 30, 2000. Collectively, this Order's restrictions on individual pollutants are no more stringent than required to implement the requirements of the CWA.

E. Interim Effluent Limitations – Not Applicable

F. Land Discharge Specifications – Not Applicable

G. Recycling Specifications – Not Applicable

V. RATIONALE FOR RECEIVING WATER LIMITATIONS

The receiving water limitations in this Order are based upon the water quality objectives contained in the Basin Plan.

A. Surface Water

The Basin Plan contains numeric and narrative water quality objectives applicable to all surface waters within the Lahontan Region. Water quality objectives include an objective to maintain the high quality waters pursuant to federal regulations (part 131.12) and State Water Board Resolution No. 68-16. Surface water limitations in this Order are included to ensure protection of beneficial uses of the receiving waters, the minor surface waters and wetlands associated with Amedee Hot Springs.

B. Groundwater

The Basin Plan contains numeric and narrative water quality objectives applicable to all ground waters within the Lahontan Region: Groundwater quality objectives include an objective to maintain the high quality waters pursuant to State Water Board Resolution No. 68-16. Ground waters in the Honey Lake groundwater basin may not meet all objectives for applicable beneficial uses due to natural factors, including natural geothermal activity. Site-specific monitoring and analyses are, in general, needed to establish the local ground water quality conditions. Ground water limitations in this Order are included to ensure protection of background water quality and beneficial uses of ground water that may be affected by discharges.

VI. RATIONALE FOR PROVISIONS

A. Standard Provisions

Standard Provisions, which apply to all NPDES permits in accordance with 40 C.F.R. section 122.41, and additional conditions applicable to specified categories of permits in accordance with 40 C.F.R. section 122.42, are provided in Attachment D. The Discharger must comply with all standard provisions and with those additional conditions that are applicable under section 122.42.

Sections 122.41(a)(1) and (b) through (n) of 40 C.F.R. establish conditions that apply to all state-issued NPDES permits. These conditions must be incorporated into the permits either expressly or by reference. If incorporated by reference, a specific citation to the regulations must be included in the Order. Section 123.25(a)(12) of 40 C.F.R. allows the state to omit or modify conditions to impose more stringent requirements. In accordance with 40 C.F.R. section 123.25, this Order omits federal conditions that address enforcement authority specified in 40 C.F.R. sections 122.41(j)(5) and (k)(2) because the enforcement authority under the Water Code is more stringent. In lieu of these conditions, this Order incorporates by reference Water Code section 13387(e).

B. Special Provisions

1. Reopener Provisions

These provisions are based on 40 CFR 122.62 and allow modification of this Order and its effluent limitations as necessary in response to updated water quality objectives, regulations, or other new relevant information that may be established in the future and other circumstances as allowed by law.

2. Special Studies and Additional Monitoring Requirements

a. **Chronic Toxicity Evaluation Study.** As described in Section IV.C.5 of this Fact Sheet, the results of chronic toxicity testing by the Discharger during the term of Order R6T-2009-0007 show periodic excursions above 1.0 TUc, indicating the potential for chronic toxicity in the discharge from Discharge Point 001. Therefore, this Order requires the Discharger to develop and implement a chronic toxicity evaluation study as a means to identify the source of the toxicity in the discharge. The focus of the study should be on whether the pollutant characteristics of the intake (i.e., geothermal fluid) water used by the Facility are the cause of the chronic toxicity and verify that Facility operations are not contributing to the toxicity. The study shall be sufficient to characterize the quality of the intake water and wastewater discharge. At a minimum, the study should provide the results of concurrent chronic toxicity tests on both the Facility influent and effluent from Discharge Point 001, as well as evaluate the possible contribution arsenic, boron,

mercury, and/or molybdenum concentrations in the intake may have to any observed chronic toxicity.

Numerous USEPA guidance documents are available to assist the Discharger develop and implement such a study, including:

i. *Toxicity Reduction Evaluation Guidance for Municipal Wastewater Treatment Plants*, EPA/833-B-99/002, August 1999.

ii. *Generalized Methodology for Conducting Industrial Toxicity Reduction Evaluations (TREs)*, EPA/600/2-88/070, April 1989.

iii. *Methods for Aquatic Toxicity Identification Evaluations: Phase I Toxicity Characterization Procedures, Second Edition*, EPA 600/6-91/003, February 1991.

iv. *Toxicity Identification Evaluation: Characterization of Chronically Toxic Effluents, Phase I,* EPA/600/6-91/005F, May 1992.

v. *Methods for Aquatic Toxicity Identification Evaluations: Phase II Toxicity Identification Procedures for Samples Exhibiting Acute and Chronic Toxicity, Second Edition,* EPA/600/R-92/080, September 1993.

vi. *Methods for Aquatic Toxicity Identification Evaluations: Phase III Toxicity Confirmation Procedures for Samples Exhibiting Acute and Chronic Toxicity, Second Edition*, EPA 600/R-92/081, September 1993.

vii. *Methods for Measuring the Acute Toxicity of Effluents and Receiving Waters to Freshwater and Marine Organisms, Fifth Edition*, EPA-821-R-02-012, October 2002.

viii. *Short-term Methods for Estimating the Chronic Toxicity of Effluents and Receiving Waters to Freshwater Organisms, Fourth Edition,* EPA-821-R-02-013, October 2002.

ix. *Technical Support Document for Water Quality-based Toxics Control,* EPA/505/2-90-001, March 1991.

The study shall be completed and submitted to the Lahontan Water Board within 24 months after the effective date of this Order.

3. Best Management Practices and Pollution Prevention

a. Best Management Practices Plan. This Order requires that the Discharger update and implement its existing Best Management Practices (BMP) Plan. The BMP Plan requirements are specified in Attachment G to the Order, which are consistent with the general guidance contained in the USEPA *Guidance Manual for Developing Best Management Practices (BMPs)* (EPA 833-B-93-004).

4. Construction, Operation, and Maintenance Specifications – Not Applicable

5. Special Provisions for Municipal Facilities (POTWs Only) – Not Applicable

6. Other Special Provisions – Not Applicable

7. Compliance Schedules – Not Applicable

VII. RATIONALE FOR MONITORING AND REPORTING REQUIREMENTS

CWA section 308 and 40 C.F.R. sections 122.41(h), (j)-(l), 122.44(i), and 122.48 require that all NPDES permits specify monitoring and reporting requirements. Water Code sections 13267 and 13383 also authorize the Lahontan Water Board to establish monitoring, inspection, entry,

reporting, and recordkeeping requirements. The Monitoring and Reporting Program (MRP), Attachment E of this Order establishes monitoring, reporting, and recordkeeping requirements that implement federal and state requirements. The following provides the rationale for the monitoring and reporting requirements contained in the MRP for this facility.

A. Influent Monitoring

Influent monitoring is required to collect data on the characteristics of the wastewater and to assess compliance with effluent limitations (i.e., use for calculating intake credits).

1. Monitoring Location INF-001

a. Influent monitoring frequencies (2/Year) and sample type (grab) for arsenic, boron, mercury, and molybdenum have been retained from Order R6T-2009-0007 to determine compliance with effluent limitations for these parameters. In addition, the influent monitoring frequencies (2/Year) and sample type (grab) for copper, lead, and zinc have been retained from Order R6T-2009-0007 to assess the quality of the influent for these pollutants.

b. Influent monitoring frequencies (2/Year) and sample type (grab) for pH has been retained from Order R6T-2009-0007 to determine compliance with receiving water limitations for this parameter.

c. Due to the potential presence of priority pollutants in high concentrations in the influent over which the Discharger has no control, this Order retains the periodic monitoring requirement from Order R6T-2009-0007 for priority pollutants. For the remaining priority pollutant metals (i.e., metals other than arsenic, copper, lead, mercury, and zinc), this Order requires monitoring twice (May and November) during the fourth year of the permit term in order to collect data (including hardness) to conduct an assessment of the quality of the influent for the next permit renewal. For priority pollutant organics, this Order requires monitoring once (May) during the fourth year of the permit term in order to collect data to conduct an assessment of the quality of the influent for the next permit renewal.

B. Effluent Monitoring

Pursuant to the requirements of 40 CFR 122.44(i)(2) effluent monitoring is required for all constituents with effluent limitations. Effluent monitoring is necessary to assess compliance with effluent limitations, and to assess the impacts of the discharge on the receiving stream and groundwater.

1. Monitoring Location EFF-001

a. Effluent monitoring frequencies (2/Year) and sample type (grab) for arsenic, boron, mercury, and molybdenum have been retained from Order R6T-2009-0007 to determine compliance with effluent limitations for these parameters. In addition, the effluent monitoring frequencies (2/Year) and sample type (grab) for copper, lead, and zinc have been retained from Order R6T-2009-0007 to assess the quality of the effluent for these pollutants.

b. Effluent monitoring frequencies (2/Year) and sample type (grab) for pH and temperature have been retained from Order R6T-2009-0007 to determine compliance with receiving water limitations for these parameters.

c. Monitoring data collected over the previous permit term for beryllium, cadmium, chromium (III), chromium (IV), nickel, selenium, and silver did not demonstrate reasonable potential to exceed water quality objectives/criteria. Thus, twice per year

monitoring requirements for these parameters have not been retained from Order R6T-2009-0007.

d. In accordance with Section 1.3 of the SIP, periodic monitoring for priority pollutants for which criteria or objectives apply and for which no effluent limitations have been established is required. For the remaining priority pollutant metals (i.e., metals other than arsenic, copper, lead, mercury, and zinc), this Order requires monitoring twice (May and November) during the fourth year of the permit term in order to collect data (including hardness) to conduct an RPA for the next permit renewal. For priority pollutant organics, this Order requires monitoring once (May) during the fourth year of the permit term in order to collect data to conduct an RPA for the next permit renewal.

C. Whole Effluent Toxicity Testing Requirements

1. **Acute Toxicity.** Acute toxicity testing is required twice during the fourth year of the term of this Order to demonstrate continued compliance with the Basin Plan narrative objective for toxicity for discharge from Discharge Point 001.

2. **Chronic Toxicity.** As described in Section IV.C.5 of this Fact Sheet, routine chronic toxicity monitoring is not required as part of this Order. Instead, a special chronic toxicity evaluation study is being required to identify the source of the chronic toxicity in the effluent from Discharge Point 001.

D. Receiving Water Monitoring

Due to the fact that the Facility well diverts upflowing geothermal water from its natural exit at the hot springs, there is no upstream receiving water. Further, the immediate discharge at the Facility to the Amedee Hot Springs area makes monitoring downstream of the discharge impractical. The monitoring requirements contained in this Order for the influent to the Facility (i.e., the geothermal water as it exist the well), will be used to characterize the background surface and ground water.

1. **Surface Water – Not Applicable**

2. **Groundwater – Not Applicable**

E. Other Monitoring Requirements – Not Applicable

VIII. PUBLIC PARTICIPATION

The Lahontan Water Board has considered the issuance of WDRs that will serve as an NPDES permit for the Amedee Geothermal Power Plant. As a step in the WDR adoption process, the Lahontan Water Board staff has developed tentative WDRs and has encouraged public participation in the WDR adoption process.

A. Notification of Interested Parties

The Lahontan Water Board notified the Discharger and interested agencies and persons of its intent to prescribe WDRs for the discharge and provided an opportunity to submit written comments and recommendations. Notification was provided through the Lassen County Times on <Date>.

The public had access to the agenda and any changes in dates and locations through the Lahontan Water Board's website at: http://www.waterboards.ca.gov/lahontan

B. Written Comments

Interested persons were invited to submit written comments concerning tentative WDRs as provided through the notification process. Comments were due either in person or by mail to

the Executive Officer at the Lahontan Water Board at the address on the cover page of this Order.

To be fully responded to by staff and considered by the Lahontan Water Board, the written comments were due at the Lahontan Water Board office by 5:00 p.m. on July 7, 2014.

C. Public Hearing Opportunity

The Lahontan Water Board held a public meeting and provided an opportunity for interested parties to testify in a public hearing on the proposed WDRs during its regular Board meeting on the following date and time and at the following location:

Date:	July 16-17, 2014
Time:	between 8 am July 16 and 5 pm July 17, 2014
Location:	California Regional Water Quality Control Board, Lahontan Region Annex- Hearing Room **971 Silver Dollar Ave.<Public Hearing Address>** **South Lake Tahoe, CA 96150<Public Hearing City, State Zip>**

Interested persons were invited to attend. At the public meeting, the Lahontan Water Board heard any testimony pertinent to the discharge, WDRs, and permit. For accuracy of the record, important testimony was requested in writing.

D. Reconsideration of Waste Discharge Requirements

Any aggrieved person may petition the State Water Board to review the decision of the Lahontan Water Board regarding the final WDRs. The petition must be received by the State Water Board at the following address within 30 calendar days of the Lahontan Water Board's action:

State Water Resources Control Board
Office of Chief Counsel
P.O. Box 100, 1001 I Street
Sacramento, CA 95812-0100

For instructions on how to file a petition for review, see
http://www.waterboards.ca.gov/public_notices/petitions/water_quality/wqpetition_instr.shtml

E. Information and Copying

The Report of Waste Discharge, other supporting documents, and comments received are on file and may be inspected at the address above at any time between 8:30 a.m. and 4:45 p.m., Monday through Friday. Copying of documents may be arranged through the Lahontan Water Board by calling (530) 542-5400.

F. Register of Interested Persons

Any person interested in being placed on the mailing list for information regarding the WDRs and NPDES permit should contact the Lahontan Water Board, reference this facility, and provide a name, address, and phone number.

G. Additional Information

Requests for additional information or questions regarding this order should be directed to Robert Tucker at (530) 542-5467.

ATTACHMENT G – BEST MANAGEMENT PRACTICES PLAN REQUIREMENTS

1. Implementation. The Discharger shall develop and implement a Best Management Practices (BMP) Plan that achieves the objectives and the specific requirements listed below. The BMP Plan shall be implemented as soon as possible, but no later than 120 days from the effective date -of this Order. The Discharger shall also submit a copy of the BMP Plan to the Executive Officer within 120 days from the effective date of this Order.

2. Purpose. Through implementation of the BMP Plan the Discharger shall prevent or minimize the generation and the potential for the release of pollutants from the Amedee Geothermal Power Plant to the waters of the United States through normal operations and ancillary activities.

3. Objectives. The Discharger shall develop the BMP Plan consistent with the following objectives for the control of pollutants.

    a. The number and quantity of pollutants and the toxicity of effluent generated, discharged or potentially discharged from the Amedee Geothermal Power Plant shall be reduced by the Discharger to the extent feasible by managing each influent waste stream in the most appropriate manner.

    b. Under the BMP Plan, and any Standard Operating Procedures (SOPs) included in the Plan, the Discharger shall ensure proper operation and maintenance of the Amedee Geothermal Power Plant.

    c. The Discharger shall establish specific objectives for the control of pollutants by conducting the following evaluations.

        (1) Each facility component or system shall be examined for its waste minimization opportunities and its potential for causing a release of pollutants that would violate water quality objectives for waters of the United States due to equipment failure, improper operation, and natural phenomena such as rain or snowfall, etc. The examination shall include all normal operations and ancillary activities including, for example, material storage areas, plant site runoff, in-plant transfer, process and material handling areas, loading or unloading operations, spillage or leaks, sludge and waste disposal, or drainage from raw material storage.

        (2) Where experience or reason indicates a reasonable potential for equipment failure (e.g., a tank overflow or leakage), natural condition (e.g., precipitation), or other circumstances to release pollutants that would violate water quality objectives for waters of the United States, the program should include a prediction of the direction, rate of flow and total quantity of pollutants which could be discharged from the facility as a result of each condition or circumstance.

4. Requirements. The BMP Plan shall be consistent with the objectives in Part 3 above and the general guidance contained in the publication entitled Guidance Manual for Developing Best Management Practices (BMPs) (USEPA, 1993) or any subsequent revisions to the guidance document. The BMP Plan shall:

a. Be documented in narrative form, shall include any necessary plot plans, drawings or maps, and shall be developed in accordance with good engineering practices. The BMP Plan shall be organized and written with the following structure:

(1) Name and location of the facility.
(2) Statement of BMP policy.
(3) Specific management practices and standard operating procedures to achieve the above objectives, including, but not limited to, the following:

(a) modification of equipment, facilities, technology, processes, and procedures,
(b) reformulation or redesign of products,
(c) substitution of materials, and
(d) improvement in management, inventory control, materials handling or general operational phases of the facility.

(4) Risk identification and assessment.
(5) Reporting of BMP incidents.
(6) Materials compatibility.
(7) Good housekeeping.
(8) Preventative maintenance.
(9) Inspections and records.
(10) Security.
(11) Employee training.

b. Include the following provisions concerning BMP Plan review:

(1) Be reviewed by plant engineering staff and the plant manager.

(2) Include a statement that the above reviews have been completed and that the BMP Plan fulfills the requirements set forth in this permit.

c. Establish specific best management practices to meet the objectives identified in Part 3 on page G-1, addressing each component or system capable of generating or causing a release of significant amounts of pollutants, and identifying specific preventative or remedial measures to be implemented.

d. Establish specific best management practices or other measures which ensure that the following specific requirements are met:

(1) If applicable, ensure proper management of solid and hazardous waste in accordance with regulations promulgated under the Resource Conservation and Recovery Act (RCRA). Management practices required under RCRA regulations shall be referenced in the BMP Plan.

(2) If applicable, reflect requirements for Spill Prevention, Control, and Countermeasure (SPCC) plans under Section 311 of the Act and 40 CFR Part 112 and may incorporate any part of such plans into the BMP Plan by reference.

(3) If applicable, reflect requirements for storm water control under Section 402(p) of the Act and the regulations at 40 CFR 122.26 and 122.44, and otherwise eliminate to the extent practicable, contamination of storm water runoff.

(4) No discharge during or 48 hours after cleaning or maintenance dredging work performed in the spray cooling ponds that would suspend and/or dissolve arsenic and metal-laden sediments.

5. Documentation. The Discharger shall maintain a copy of the BMP Plan at the facility and shall make the plan available to the Lahontan Water Board upon request. All offices of the Discharger that are required to maintain a copy of the NPDES permit shall also maintain a copy of the BMP Plan.

6. BMP Plan Modification. The Discharger shall amend the BMP Plan whenever there is a change in the facility or in the operation of the facility which materially increases the generation of pollutants or their release or potential release to the receiving waters. The Discharger shall also amend the Plan, as appropriate, when plant operations covered by the BMP Plan change. Any such changes to the BMP Plan shall be consistent with the objectives and specific requirements listed above. All changes in the BMP Plan shall be reported to the Lahontan Water Board in writing.

7. Modification for Ineffectiveness. At any time, if the BMP Plan proves to be ineffective in achieving the general objective of preventing and minimizing the generation of pollutants and their release and potential release to the receiving waters and/or the specific requirements above, the permit and/or the BMP Plan shall be subject to modification to incorporate revised BMP requirements.