Farhad, Mohammad@Waterboards

From: Pedro Reyes <pedro.reyes@cdcr.ca.gov>
Sent: Thursday, May 28, 2015 3:04 PM
To: CentralValleySacramento
Cc: Farhad, Mohammad@Waterboards; Cordano, Fred@CDCR; Stanley, Jeff@CDCR; Vasconcellos, Edward@CDCR; Bettencourt, Miles (Terry)@CDCR; Madia, Teri@CDCR
Subject: CAO R5-2015-0704 Order, Item #5
Attachments: Chp 1 Introduction.pdf; Chp 2 Unit Processes.pdf; Chp 3 Headworks.pdf; Chp 4 Activated Sludge System.pdf; Chp 5 Disinfection System.pdf; Chp 6 Chemical Systems.pdf; Chp 7 Effluent Cooling and Disposal.pdf; Chp 8 Solids Handling System.pdf; Chp 9 Plant Utility Systems.pdf

Date of Title of Submittal	May 28, 2015 – Order #5 -- R5-2015-0704
Regulatory Program	NPDES
Unit	Compliance and Enforcement
Regulated Party (Discharger)	California Department of Corrections and Rehabilitation
Facility Name	Deuel Vocational Institute
County	San Joaquin

These are the current operational documents used for the operation of the plant as it was designed. A consultant has been retained to evaluate the operation of the plant. Changes to the plant and documents will be made if the consultant determines that corrections need to be made in order to improve the operation of the plant.

Pedro B. Reyes
California Department of Corrections & Rehabilitation
Departmental Construction & Maintenance Supervisor
Facilities Planning, Construction, and Management
Facilities Asset Management Branch
Phone: (916) 255-0516
Fax: (916) 255-3022

Deuel Vocational Institution

New Wastewater Treatment Plant

O&M Manual
Introduction

TABLE OF CONTENTS

Page No.

Chapter 1 1-1

1.1 HOW TO USE THIS MANUAL 1-1
- 1.1.1 General Process Description 1-2
- 1.1.2 Design Criteria 1-2
- 1.1.3 Component/Equipment Listing 1-2
- 1.1.4 Component Description 1-2
- 1.1.5 Normal Operation Procedures 1-2
- 1.1.6 Emergency Operation Procedures 1-3
- 1.1.7 Startup/Shutdown Procedures 1-3
- 1.1.8 Alarm Conditions 1-3
- 1.1.9 Safety 1-3
- 1.1.10 Maintenance 1-3

1.2 LOCATION OF THE FACILITIES 1-4

1.3 ADDITIONAL REFERENCES 1-4
- 1.3.1 Operations 1-4
- 1.3.2 Maintenance 1-4
- 1.3.3 Safety 1-7

LIST OF FIGURES

Figure 1.1 Location and Vicinity Map 1-5
Figure 1.2 Facility Layout Plan 1-6

INTRODUCTION

1.1 HOW TO USE THIS MANUAL

This operations and maintenance (O&M) manual was prepared as part of the California Department of Corrections and Rehabilitation (CDCR) Deuel Vocational Institution New Wastewater Treatment Plant Project. The Project designed a 0.70 million gallons per day (mgd) average day average month (ADAM) Waste Water Treatment Plant (WWTP). This manual replaces the previous O&M manuals used to operate the facilities existing prior to the 2010 project. While this O&M manual for the WWTP covers many operating conditions, there are many other resources, including equipment manufacturer's O&M manuals, training, and CDCR safety policies and procedures that should be referenced.

The following chapters are included in this manual:

1. Introduction
2. Unit Processes
3. Headworks
4. Activated Sludge System
5. Disinfection System
6. Chemical Systems
7. Effluent Cooling and Disposal
8. Solids Handling System
9. Plant Utility Systems

Each chapter of this manual covers a specific unit process and generally contains the following sections:

1. General Process Description
2. Design Criteria
3. Component/Equipment Listing
4. Component Description
5. Normal Operation
6. Emergency Operation
7. Startup/Shutdown Procedures
8. Alarm Conditions
9. Safety

10. Maintenance

Use the Table of Contents at the beginning of this manual to locate information by chapter, section, and page number. The following subsections describe the kind of information that can be found in each Chapter.

1.1.1 General Process Description

The General Process Description section introduces the treatment process and describes how and why the process works. In addition, this manual is available on CD-ROM where locating information may be performed using a word search. The goals, the equipment, and an introduction to the theory on how the process works is presented in this section. A figure of the process shows how the process stream flows through the treatment unit and the locations of process equipment.

1.1.2 Design Criteria

The Design Criteria section outlines the operating parameters of the process and major equipment used in the process. The quick reference tables can be used during trouble shooting to determine if equipment is performing as intended.

1.1.3 Component/Equipment Listing

The Component/Equipment Listing section is a table listing the equipment installed for a process. The table lists the name, equipment tag number, number of pieces, operating characteristics, and the purpose of the equipment. This table documents all the mechanical and instrumentation equipment dedicated to a particular process.

1.1.4 Component Description

This section describes the process and the major equipment used to achieve the treatment objectives of a process. A description of the layout and operational control is also provided. Photos or illustrative figures are provided as a part of the descriptions in this section.

A discussion of the different modes of operation describes the requirements of Local, Remote, and Automatic control modes. Details on the active alarms and the safety interlocks are provided for the equipment in the Local and Remote modes. The sequence of automatic operation is provided for the Automatic mode, along with a description of what is displayed on the Operator Interface Station (OIS).

1.1.5 Normal Operation Procedures

The Normal Operation section provides information regarding the most common operational mode and describes the operator responsibilities for routine operation of a process. The section outlines the daily requirements and suggests when equipment should be checked.

1.1.6 Emergency Operation Procedures

The Emergency Operation section describes emergency and abnormal operation of the process and major equipment within the unit process. Anticipated abnormal operating conditions are given, followed by suggested corrective actions.

1.1.7 Startup/Shutdown Procedures

This section describes the startup and shutdown procedures for the unit process and major equipment. They have been written assuming that all safety interlocks are functional and that the process and equipment are going to be operated by the automatic control system. These procedures are based on normal conditions and circumstances. They should be used knowing that extraordinary conditions and circumstances may require modifications of the steps for personnel safety and to ensure that equipment damage or process upset does not occur. Operators should be trained in plant safety and, when in doubt about the appropriateness of procedures, they should consult with their supervisor.

1.1.8 Alarm Conditions

This section describes alarm conditions that can occur during operation of the major equipment and processes at the plant. The alarms are provided for operational surveillance of the equipment and processes, alerting operators to possible problems. Even though alarms will occasionally clear by themselves in the automatic control system, an operator should always investigate the reason why an alarm sounded. Each alarm heading is followed by a statement that describes where the alarm is indicated along with suggested correction actions.

1.1.9 Safety

For specific equipment or process safety procedures, see respective unit process chapter in this manual. The established facility safety procedure should be observed during all operations, including operation under abnormal and emergency conditions.

1.1.10 Maintenance

The plant staff should develop a maintenance program for the new plant. This program should be updated with the appropriate detailed information from the manufacturer's O&M manuals. After the warranty period, revisions to the maintenance programs should be made based on operation and maintenance experience and approved by a designated manager. The revisions should increase or decrease the frequency of mechanical inspection based on the amount of wear observed during the warranty period.

1.2 LOCATION OF THE FACILITIES

The CDCR Deuel Vocational Institution WWTP is located approximately five miles east of the City of Tracy off Interstate 5 (I-5), south of the I-5/Highway 205 interchange. The facility provides tertiary treatment for the wastewater generated within the institution. Figure 1.1 shows the location of the facilities discussed in this manual. Figure 1.2 shows the Facilities Layout Plan. Operation of the WWTP is currently regulated under Waste Discharge Requirements Order NPDES No. CA0078093, issued by the California Central Valley Regional Water Quality Control Board. This permit contains effluent limitations and monitoring requirements for the WWTP.

1.3 ADDITIONAL REFERENCES

In addition to this manual, the following sources of information about the treatment process are available.

Plans and specifications for all plant improvement projects and manufacturer's O&M manuals for each piece of equipment are available. Additional information on the theory of wastewater treatment, process evaluation and control, equipment troubleshooting and maintenance practices, and safety may be found in the following references.

1.3.1 Operations

1. Water Environment Federation:
    a. Activated Sludge, MOP OM-9, 1987.
    b. Operation of Municipal Wastewater Treatment Plants (3 Volumes), MOP 11, 1996.
    c. Operation and Maintenance of Sludge Dewatering Systems, MOP OM-8, 1987.
    d. Preliminary Treatment for Wastewater Facilities, MOP OM-2, 1994.
    e. Wastewater Biology: The Microlife, 1991.
    f. Wastewater Disinfection, MOP FD-10, 1986.
    g. Wastewater Sampling for Process and Quality Control, MOP OM-1, 1980.
2. New York State Health Education Service, Manual of Instruction for Sewage Treatment Plant Operators.
3. Texas Water Utilities Association, Manual of Wastewater Operations.

1.3.2 Maintenance

1. Water Environment Federation:
    a. Instrumentation in Wastewater Treatment Facilities, MOP 21, 1993.
    b. Plant Maintenance Program, MOP OM-3, 1982.
    c. Process Instrumentation and Control Systems, MOP OM-6, 1984.
2. McGraw-Hill Co., Pump Handbook, 2001.

LOCATION MAP

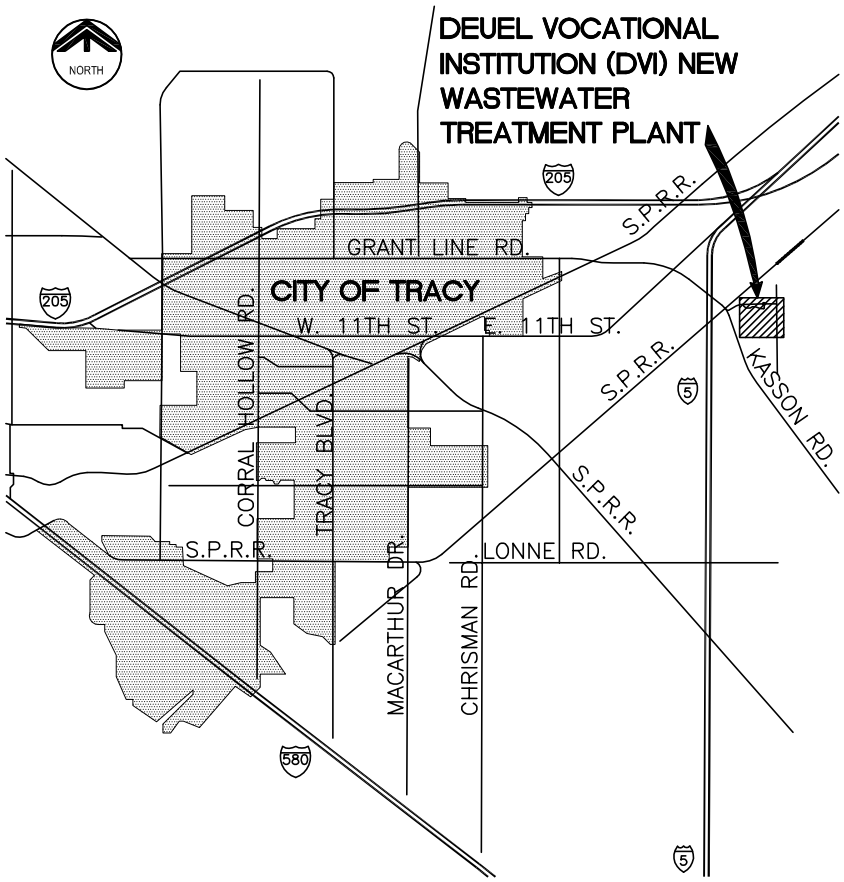

VICINITY MAP

Figure No. 1.1

LOCATION AND VICINITY MAP
DEUEL VOCATIONAL INSTITUTION (DVI) NEW WWTP

CALIFORNIA DEPARTMENT OF CORRECTIONS AND REHABILITATION

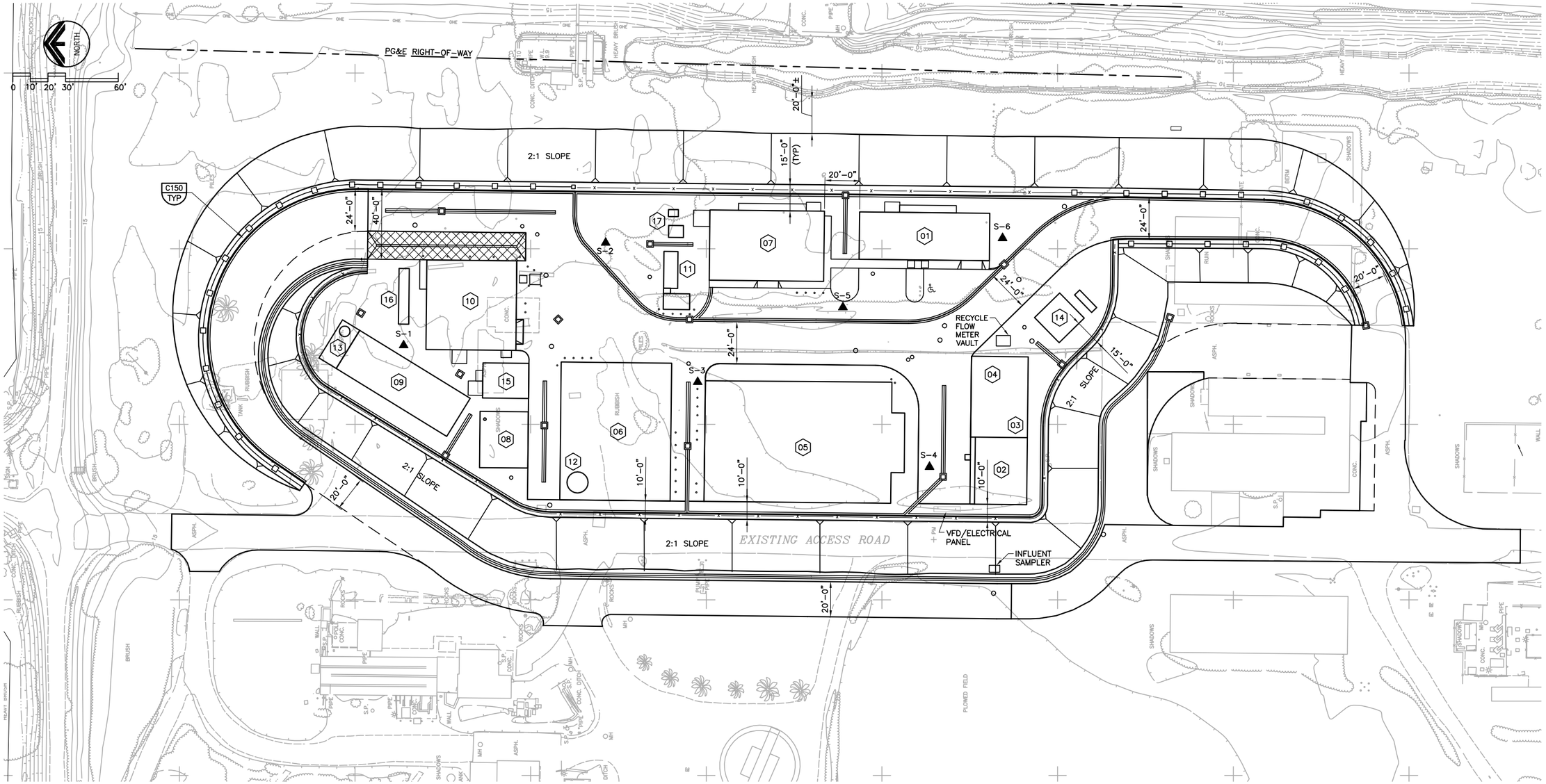

A SITE PLAN

KEY

1. OPERATIONS/LAB AND MAINTENANCE BUILDING
2. HEADWORKS
3. GRIT REMOVAL
4. DRUMSCREENS
5. AERATION TANKS/SOLIDS STORAGE TANK
6. MEMBRANE BIOLOGICAL REACTORS
7. BLOWER/ELECTRICAL BLDG
8. ULTRAVIOLET DISINFECTION SYSTEM
9. COOLING TOWERS
10. SLUDGE HANDLING FACILITY
11. STANDBY GENERATOR PAD
12. MBR CLEAN IN PLACE TANK
13. PLANT WATER SYSTEM
14. SODIUM BICARBONATE SILO
15. ULTRAVIOLET DISINFECTION ELECTRICAL BUILDING
16. EFFLUENT PARSHALL FLUME
17. TRANSFORMER PAD

NOTE:

1. ▲ CORRESPONDS TO SETTLEMENT PLATE AND SETTLEMENT MARKER LOCATION. SEE SPECIFICATION SECTION 02200–EARTHWORK FOR INSTALLATION.

Figure No. 1.2

FACILITY LAYOUT PLAN

DEUEL VOCATIONAL INSTITUTION (DVI) NEW WWTP

CALIFORNIA DEPARTMENT OF CORRECTIONS AND REHABILITATION

carollo

Engineers...Working Wonders With Water ™

1.3.3 Safety

1. Water Environment Federation:
   a. Safety and Health in Wastewater Systems, MOP SM-1, 1983.
   b. Guidelines for Developing a Wastewater Safety Program, 1983.
   c. Supervisors Guide to Safety and Health Programs, 1992.
2. American Red Cross, The American Red Cross Text Book on First Aid, latest edition.

ABBREVIATIONS FOR GENERAL PROCESSES

A	=	ampere(s)
atm	=	atmosphere
ADWF	=	Average Dry Weather Flow
ADMMF	=	Average Day Maximum Month Flow
BOD	=	biochemical oxygen demand
bhp	=	brake horsepower
Btu	=	British Thermal Unit
BTU/hr	=	British Thermal Units per Hour
cm	=	centimeter(s)
COD	=	chemical oxygen demand
cm^3	=	cubic centimeter(s)
cfd	=	cubic feet per day
cfh	=	cubic feet per hour
cfm	=	cubic feet per minute
cfs	=	cubic feet per second
cu ft	=	cubic foot (feet)
in^3	=	cubic inch(es)
m^3	=	cubic meter(s)
yd^3	=	cubic yard(s)
d	=	day
deg	=	degree(s)
ºC	=	degree(s) Celsius
ºF	=	degree(s) Fahrenheit
DO	=	dissolved oxygen
ft/day	=	feet per day
ft/hr	=	feet per hour
ft/min	=	feet per minute
ft/sec	=	feet per second
ft	=	foot (feet)
gal	=	gallons
gpd	=	gallons per day
gpd/sq ft	=	gallons per day per square foot
gph	=	gallons per hour
gpm	=	gallons per minute
gps	=	gallons per second
g	=	gram
g/L	=	gram per liter
hp	=	horsepower
hr	=	hour
in.	=	inch(es)
kV	=	kilovolt
kVA	=	kilovolt-ampere(s)
kW	=	kilowatt(s)
kWh	=	kilowatt-hour(s)
L	=	liter(s)
MW	=	megawatt
m	=	meter(s)
µm	=	micron(s)
µg/L	=	micrograms per liter

mA	=	milliampere(s)
mg	=	milligram(s)
mg/L	=	milligrams per liter
mm	=	millimeter(s)
MG	=	million gallons
mgd	=	million gallons per day
mV	=	millivolt(s)
min	=	minute(s)
MLSS	=	mixed liquor suspended solids
MLVSS	=	mixed liquor volatile suspended solids
M	=	molar (concentration)
ntu	=	nephelometric turbidity units
N	=	normal (concentration)
No.	=	number(s)
OD	=	outside diameter
ppb	=	parts per billion
ppm	=	parts per million
PHWWF	=	Peak Hour Wet Weather Flow
lb	=	pound(s)
lb/acre-ft	=	pound per acre foot
lb/day/acre	=	pounds per day per acre
lb/day/cu ft	=	pounds per day per cubic foot
psf	=	pounds per square foot
psi	=	pounds per square inch
psia	=	pounds per square inch absolute
psig	=	pounds per square inch gauge
rpm	=	revolutions per minute
rps	=	revolutions per second
sec	=	second(s)
SDI	=	sludge density index
SVI	=	sludge volume index
cm^2	=	square centimeter(s)
sq ft	=	square foot (feet)
sq in.	=	square inch(es)
km^2	=	square kilometer
m^2	=	square meter
mm^2	=	square millimeter
scfm	=	standard cubic feet per minute(68ºF, 14.7 psia, 36% relative humidity)
SOTE	=	Standard Oxygen Transfer Efficiency; fraction of oxygen in an injected gas stream dissolved under standard conditions
SOTR	=	Standard Oxygen Transfer Rate; rate of oxygen transfer from air into tap water at standard conditions (20º C, 1 atm) with zero dissolved oxygen concentration
SS	=	suspended solids
TDS	=	total dissolved solids
TKN	=	total kjeldahl nitrogen
TOC	=	total organic carbon
TOD	=	total oxygen demand
TS	=	total solids
TSS	=	total suspended solids

TVS	=	total volatile solids
VS	=	volatile solids
V	=	volt(s)
VA	=	volt-ampere(s)
W	=	watt(s)
wk	=	week(s)
yd	=	yard(s)
yr	=	year(s)

Deuel Vocational Institution

New Wastewater Treatment Plant

O&M Manual
Unit Processes

TABLE OF CONTENTS

Page No.

Chapter 2 2-1

2.1 GENERAL PROCESS DESCRIPTION 2-1
2.2 FACILITY DESIGN CRITERIA 2-7
2.3 COMPONENT/EQUIPMENT LISTING 2-7
2.4 COMPONENT DESCRIPTION 2-8
2.4.1 Liquid Treatment Processes 2-8
2.4.2 Solids Treatment Processes 2-11
2.5 NORMAL OPERATION 2-12
2.5.1 Raw Wastewater 2-12
2.5.2 Recycle Streams 2-12
2.5.3 Septage 2-13
2.5.4 Stormwater 2-13
2.6 EMERGENCY OPERATION 2-13
2.7 STARTUP/SHUTDOWN PROCEDURES 2-13
2.8 ALARM CONDITIONS 2-13
2.8.1 Plant Control System 2-13
2.8.2 Plant Alarm System 2-15
2.9 SAFETY 2-15
2.10 MAINTENANCE 2-15

LIST OF TABLES

Table 2.1 Headworks Design Criteria 2-7

LIST OF FIGURES

Figure 2.1 Liquid and Solids Flow Schematic I 2-2
Figure 2.2 Liquid and Solids Flow Schematic II 2-3
Figure 2.3 Liquid and Solids Flow Schematic III 2-4
Figure 2.4 Liquid and Solids Flow Schematic IV 2-5
Figure 2.5 Liquid and Solids Flow Schematic V 2-6
Figure 2.6 Hydraulic Profile of Liquid Treatment Processes 2-9
Figure 2.7 SCADA System Architecture 2-14

Chapter 2

UNIT PROCESSES

2.1 GENERAL PROCESS DESCRIPTION

Wastewater treatment is performed at the Deuel Vocational Institution (DVI) New Wastewater Treatment Plant (WWTP) using preliminary treatment, alkalinity addition, activated sludge secondary treatment with nitrification, membrane bioreactor (MBR) system using hollow fiber membranes for tertiary treatment, effluent disinfection by ultraviolet (UV), sludge thickening, and dewatering. The goal of these processes is to remove the organic and solid materials that pollute the receiving water and remove ammonia (NH_4) and nitrate (NO_3), which depletes oxygen in the river and can be toxic to fish and other aquatic life.

The WWTP has a liquid design flow of 0.70 million gallons per day (mgd) average day average month (ADAM). The design solids loading capacity of the treatment plant is 230 milligrams per liter (mg/L) of total suspended solids (TSS). The design organic loading capacity of the treatment plant is 240 mg/L of 5-day biochemical oxygen demand (BOD). The activated sludge process design allows for an aerobic solids retention time (SRT) of 10 days at average day maximum month (ADMM) to achieve full nitrification.

The liquid treatment processes include the headworks, alkalinity addition, aeration tanks, MBR system, disinfection by UV, and effluent cooling and discharge through an existing 14-inch outfall to Deuel Drain.

The solids treatment processes include the screenings and grit disposal, sludge storage tank, gravity belt thickener/belt filter press (GBT/BFP), thickening and dewatering, and solids disposal by hauling off site. Figure 2.1, 2.2, 2.3, 2.4, and 2.5 show plant liquid and solids flow schematic.

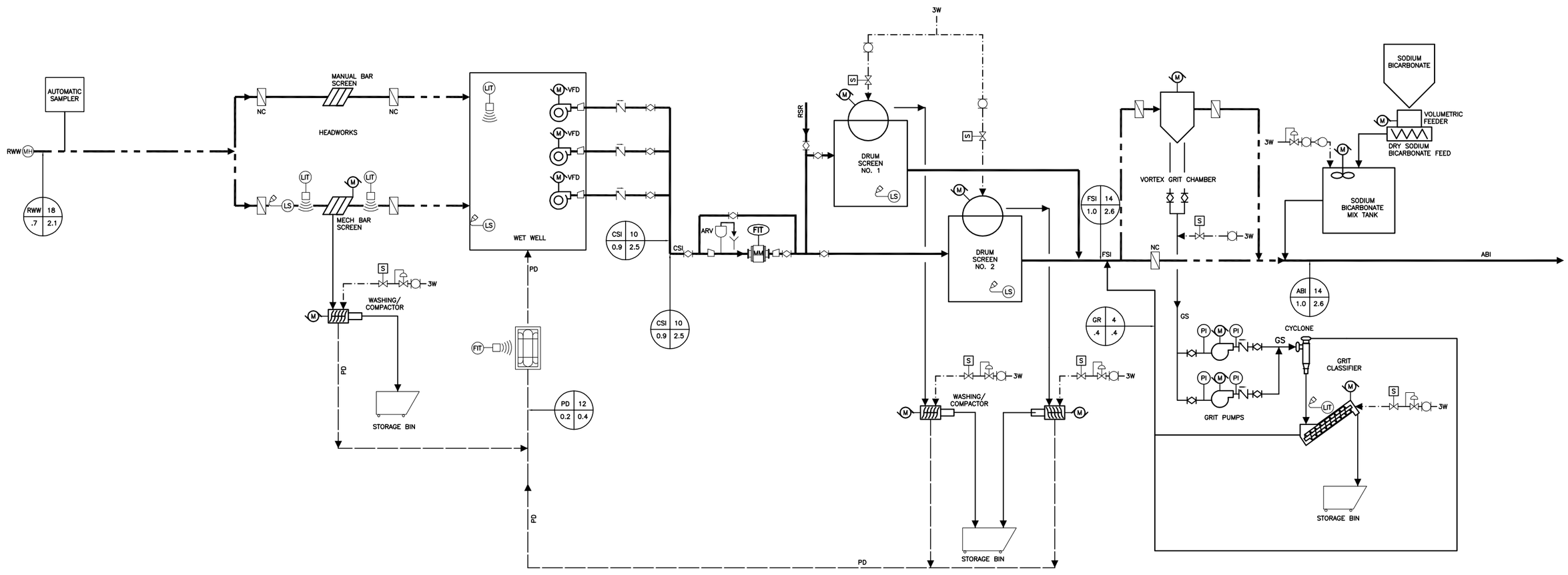

LEGEND

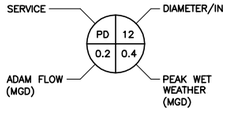

Figure No. 2.1

LIQUID AND SOLIDS FLOW SCHEMATIC I
DEUEL VOCATIONAL INSTITUTION (DVI) NEW WWTP

CALIFORNIA DEPARTMENT OF CORRECTIONS AND REHABILITATION

carollo
Engineers...Working Wonders With Water ™

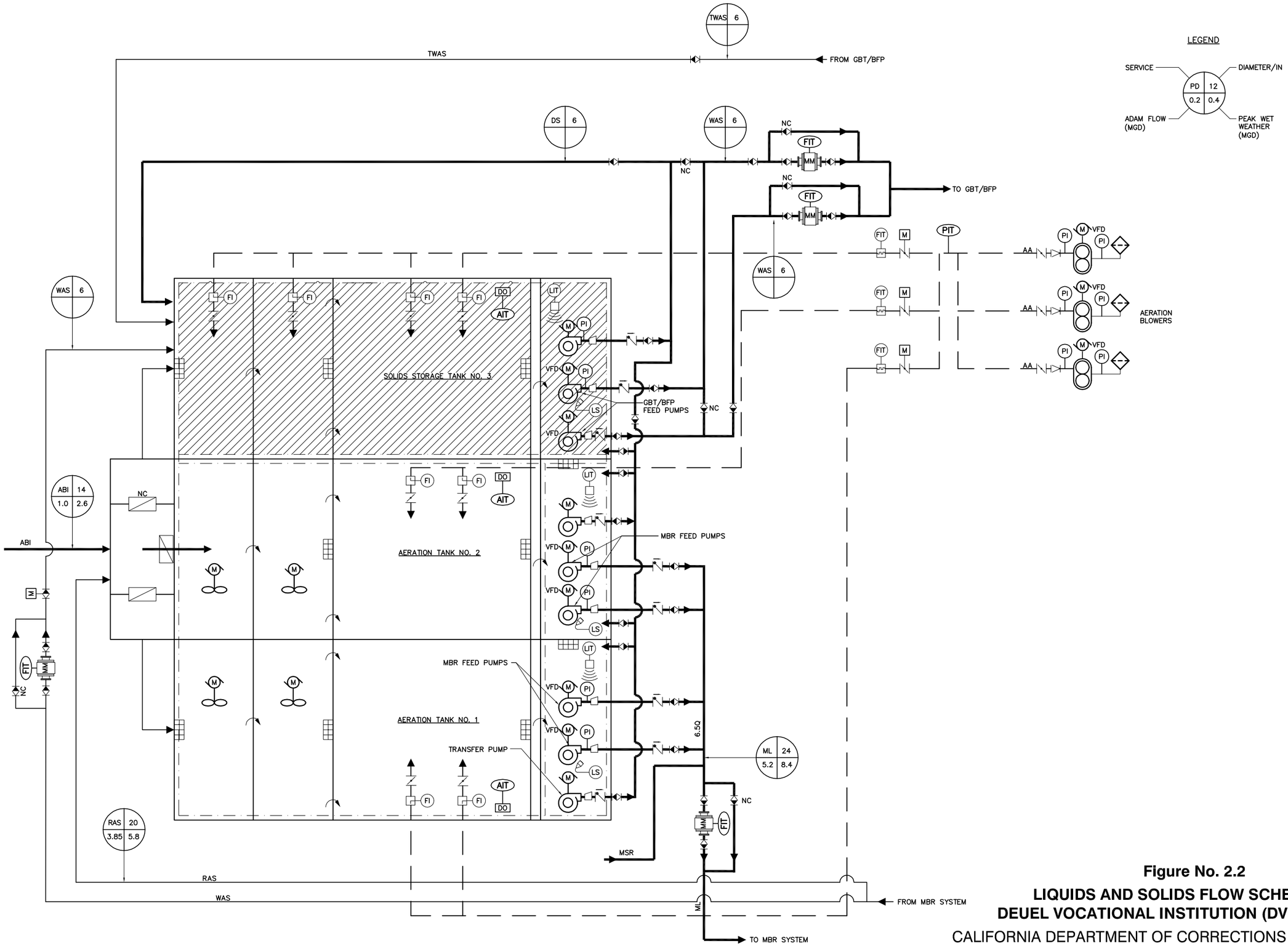

Figure No. 2.2

LIQUIDS AND SOLIDS FLOW SCHEMATIC II
DEUEL VOCATIONAL INSTITUTION (DVI) NEW WWTP

CALIFORNIA DEPARTMENT OF CORRECTIONS AND REHABILITATION

carollo
Engineers...Working Wonders With Water ™

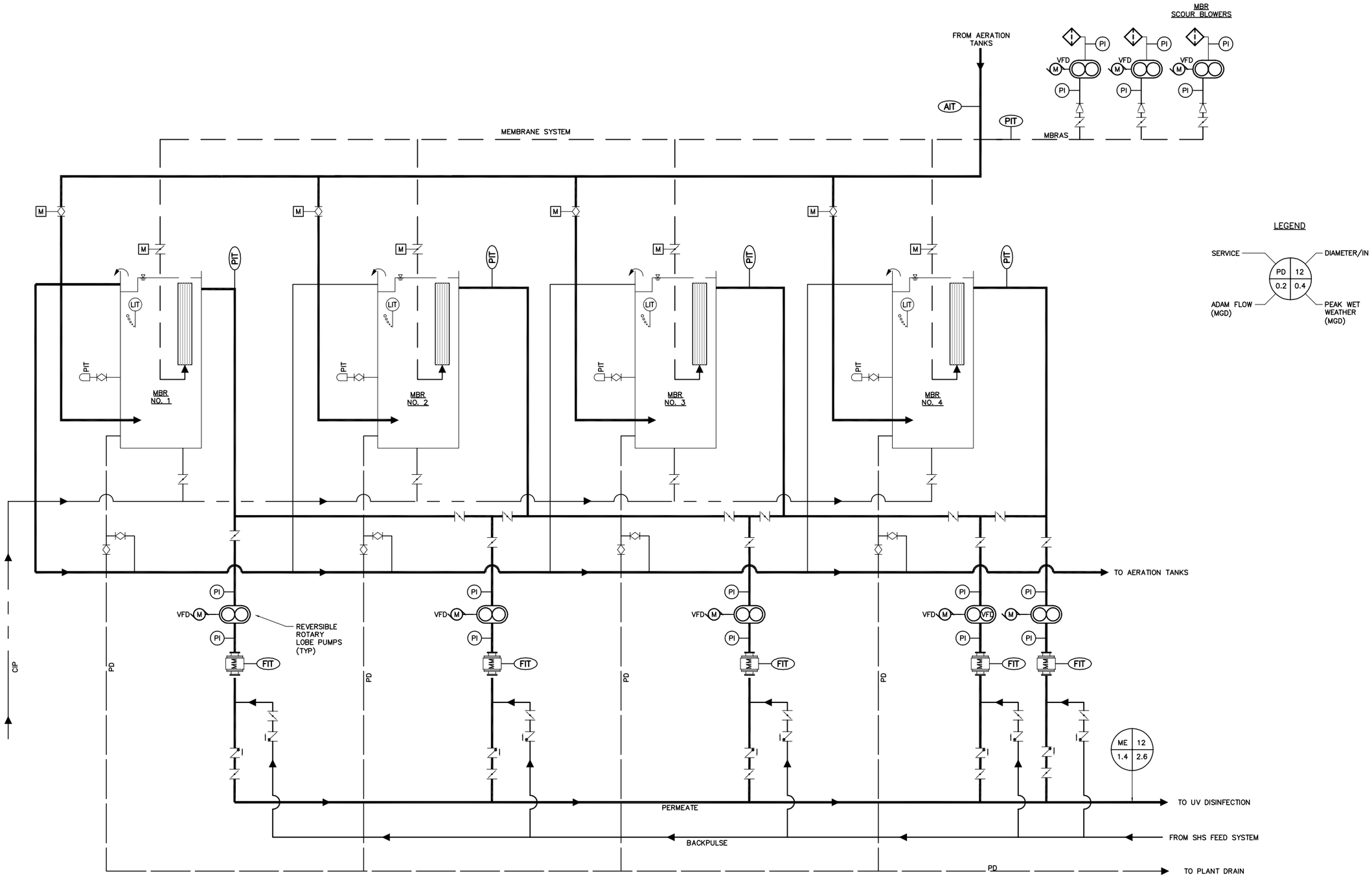

Figure No. 2.3

LIQUIDS AND SOLIDS FLOW SCHEMATIC III
DEUEL VOCATIONAL INSTITUTION (DVI) NEW WWTP

CALIFORNIA DEPARTMENT OF CORRECTIONS AND REHABILITATION

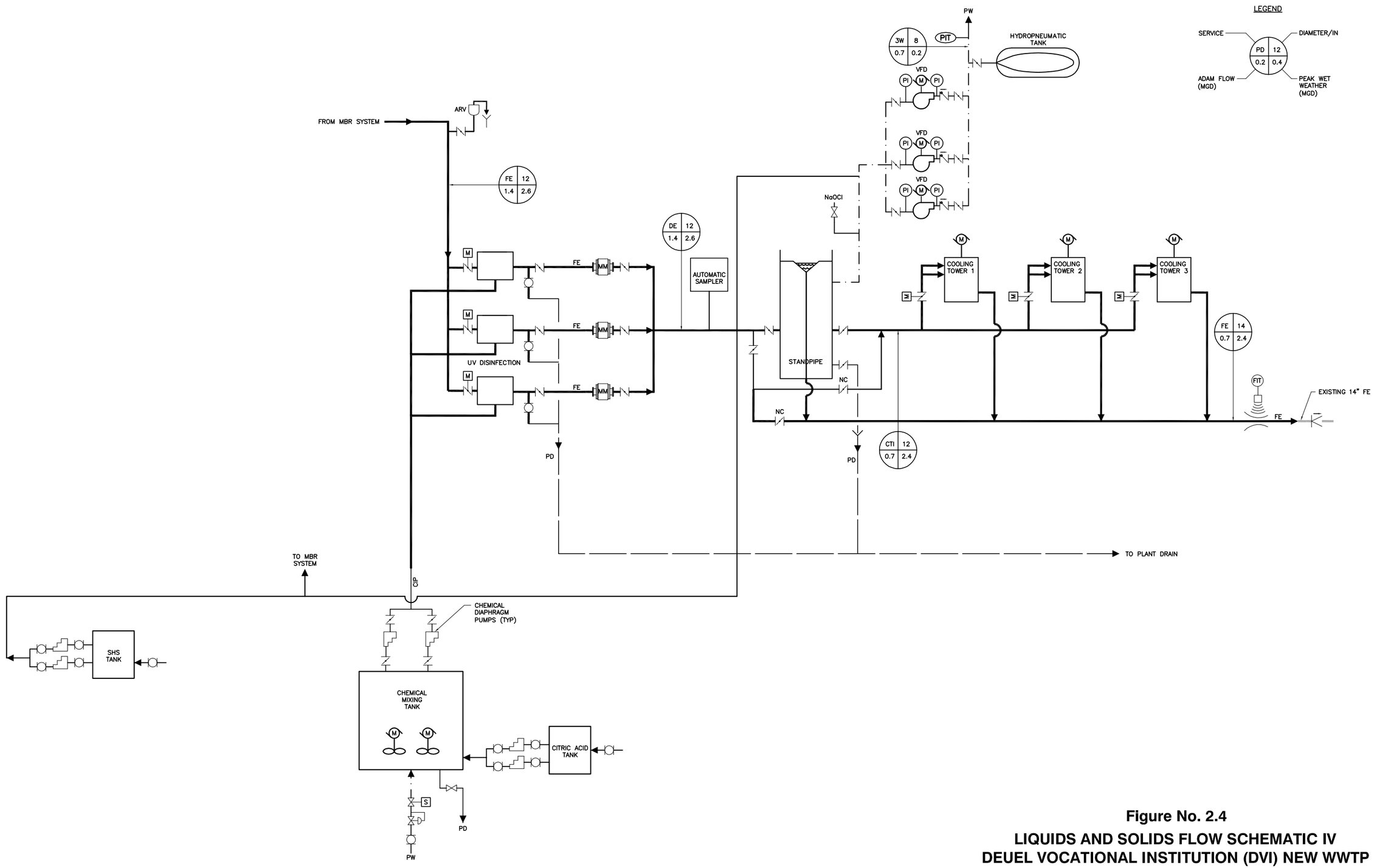

Figure No. 2.4

LIQUIDS AND SOLIDS FLOW SCHEMATIC IV
DEUEL VOCATIONAL INSTITUTION (DVI) NEW WWTP

CALIFORNIA DEPARTMENT OF CORRECTIONS AND REHABILITATION

carollo
Engineers...Working Wonders With Water ™

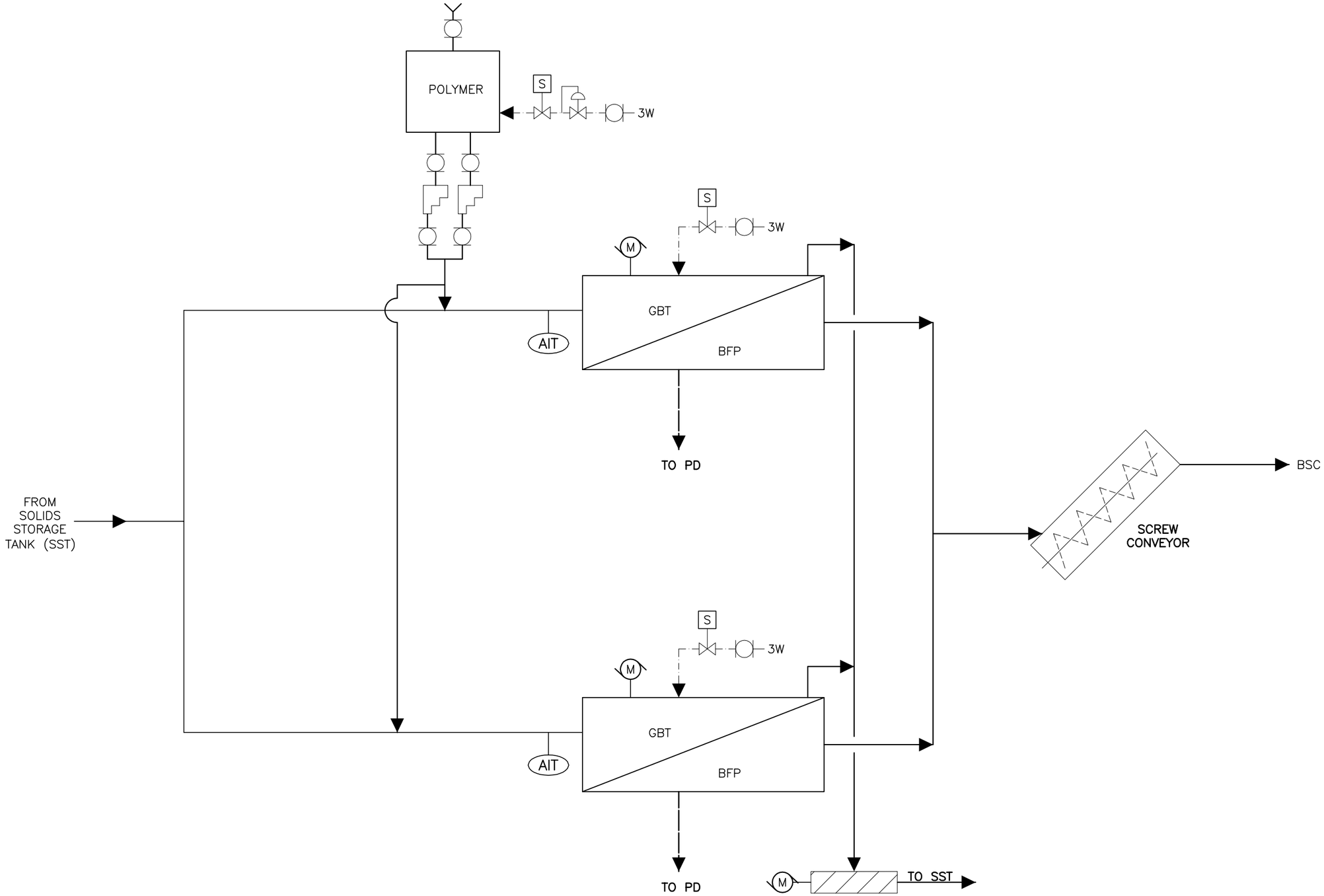

Figure No. 2.5

LIQUIDS AND SOLIDS FLOW SCHEMATIC V
DEUEL VOCATIONAL INSTITUTION (DVI) NEW WWTP

CALIFORNIA DEPARTMENT OF CORRECTIONS AND REHABILITATION

carollo
Engineers...Working Wonders With Water ™

2.2 FACILITY DESIGN CRITERIA

The facility design criteria for influent wastewater characteristics are listed in Table 2.1. Design criteria for each unit process is presented in the chapters on individual processes.

Table 2.1 Headworks Design Criteria DVI New Wastewater Treatment Plant California Department of Corrections and Rehabilitation		
FLOWS:	**Units**	**Value**
Average Day Average Month (ADAM)	mgd	0.70
Average Day Maximum Month (ADMM)	mgd	0.84
Maximum Daily Flow	mgd	1.05
Peak Wet Weather	mgd	2.10
WASTEWATER CHARCHERISTICS:	**Units**	**Value**
Organic Loading (ADAM)		
Influent BOD_5	mg/L	240
Influent BOD_5	ppd	1,401
Solids Loading (ADAM)		
Influent TSS	mg/L	230
Influent TSS	ppd	1,343
Ammonia Loading (ADWF)		
Influent Alkalinity	mg/L	40
Influent Ammonia	ppd	3,870
Ammonia Loading (ADWF)		
Influent Total Dissolved Solids	mg/L	350

2.3 COMPONENT/EQUIPMENT LISTING

Lists of major components and equipment associated with each unit process are presented in the chapters on individual processes. These lists include the name of the equipment, equipment tag number, number of pieces, operating characteristics, and purpose of the equipment.

2.4 COMPONENT DESCRIPTION

This section provides an overview of the liquids and solids flow routing through the treatment processes. Specific chapters for each unit process should be consulted for more detailed information on process control and operation of an individual process.

2.4.1 Liquid Treatment Processes

Figure 2.6 shows the hydraulic profile of the liquid treatment processes. Names and abbreviations for the liquid flow streams throughout the plant are listed below.

1. Raw Wastewater (RWW)
2. Course Screened Influent (CSI)
3. Fine Screened Influent (FSI)
4. Aeration Tank Influent (ATI)
5. Mixed Liquor (ML) or Mixed Liquor Suspended Solids (MLSS)
6. Membrane Effluent (ME)
7. Disinfected Effluent (DE)
8. Final Effluent (FE)

2.4.1.1 Preliminary Treatment

RWW from the institution is conveyed to the headworks structure by gravity and collected in the headworks structure. There are two screening channels, one channel contains a mechanical climber screen and the second channel contains a manual bar screen for use when the mechanical screen is inoperative. The CSI passes through either the mechanical climber screen or manual bar screen.

An influent sampler is installed after the coarse bar screen. The influent sampler is used to collect composite samples taken from the RWW. These samples are analyzed to determine the influent BOD_5, TSS, and other constituent removal rates.

After the influent sampler, the plant influent flows into the influent wet well. Also entering the wet well is the plant drain that receives drain water from process areas, filtrate from the GBT/BFP dewatering process, and wash water from the coarse and fine screen washer/compactors. The influent wet well contains three submersible non-clogging impeller pumps that convey the FSI to a rotary drum screen. Prior to the rotary drum screen, the discharge lines of the pumps combine into a header pipe equipped with a magnetic flowmeter to measure influent flow. The influent flowmeter measurements are used for reporting and process control. After the flowmeter, the FSI influent will pass through a fine drum screen with openings of 2 millimeters. The fine screened effluent then flows by gravity to the grit removal system, where heavy inorganic solids are removed from the plant influent.

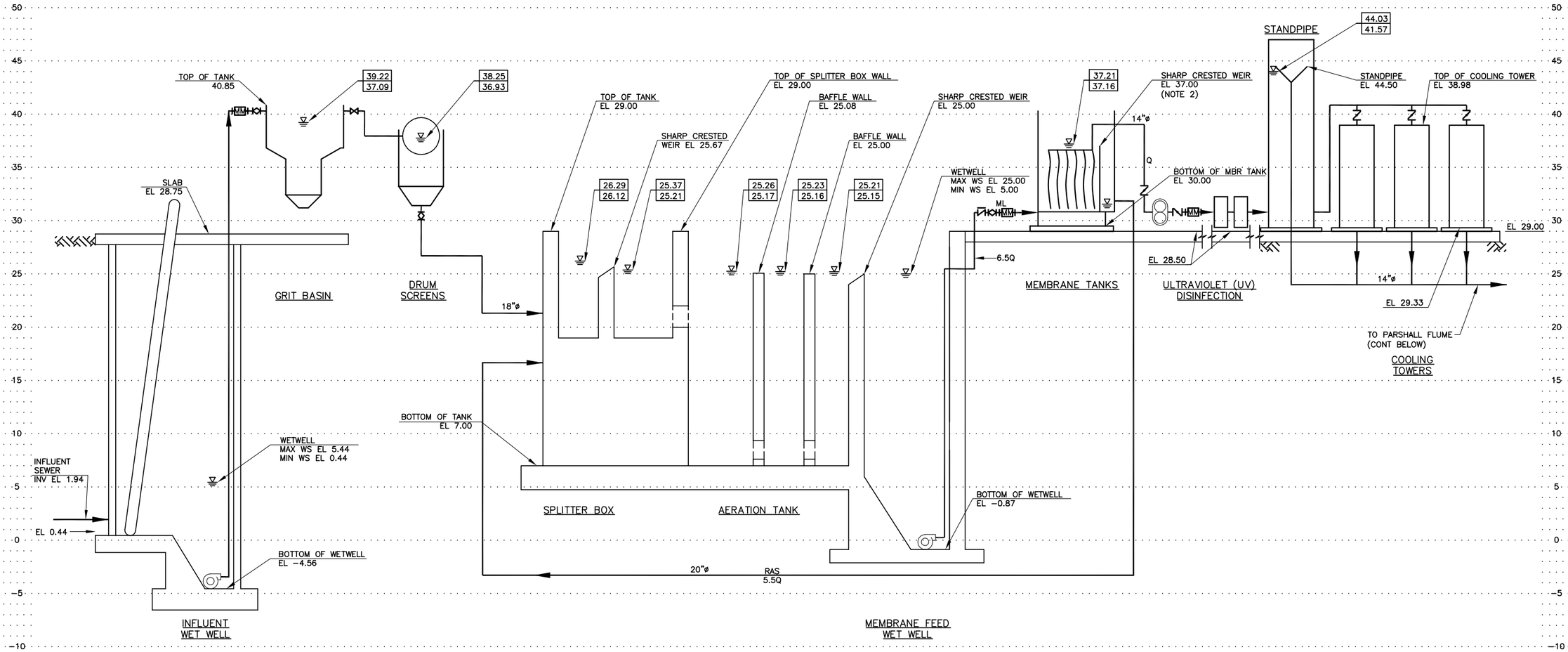

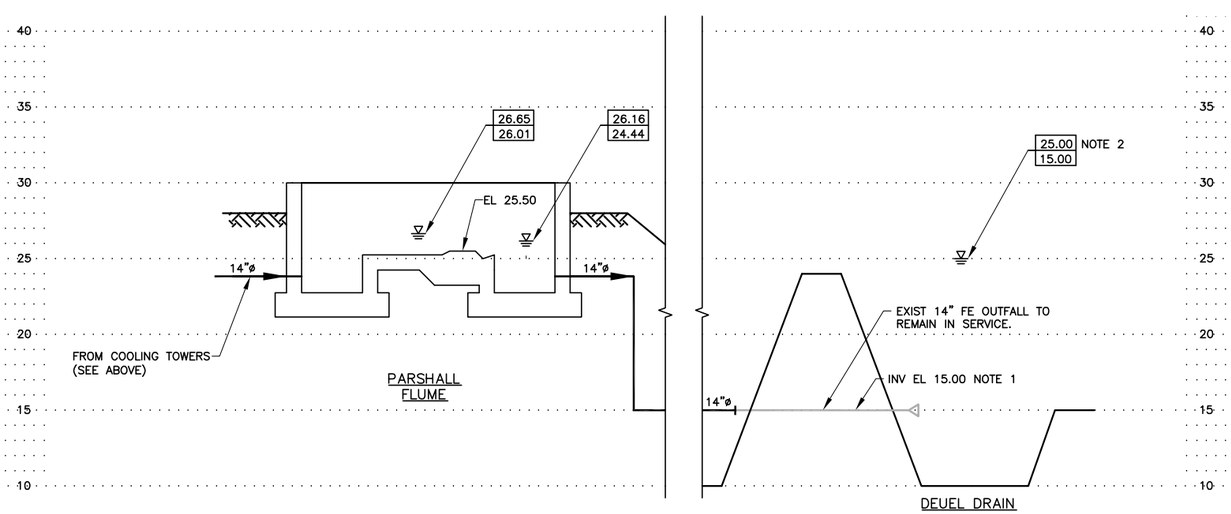

LEGEND

WSE	PEAK WET WEATHER (2.10 MGD NOMINAL INFLUENT FLOW)
WSE	AVERAGE DAY AVERAGE MONTH (0.7 MGD NOMINAL INFLUENT FLOW)

HYDRAULIC PROFILE

HORIZONTAL SCALE: NOT TO SCALE
VERTICAL SCALE: 1" = 5'-0"

Figure No. 2.6

HYDRAULIC PROFILE OF LIQUID TREATMENT PROCESSES
DEUEL VOCATIONAL INSTITUTION (DVI) NEW WWTP

CALIFORNIA DEPARTMENT OF CORRECTIONS AND REHABILITATION

carollo
Engineers...Working Wonders With Water ™

2.4.1.2 Alkalinity Addition

After the grit removal system of the headworks processes, the ATI is directed to the chemical pretreatment system. Sodium bicarbonate is added to increase the alkalinity of the wastewater to ensure that full nitrification can take place in the biological nutrient removal (BNR) treatment process. Following the addition of the sodium bicarbonate, the wastewater flows by gravity to the Aeration Tanks.

2.4.1.3 Biological Treatment

The ATI flows from the grit removal system of the headwork processes to the aeration tank splitter box, where return activated sludge (RAS) from the MBR system and ATI are combined, before entering Aeration Tank 1 and 2. Each tank has two anoxic zones and an aerobic zone. The anoxic zones have submerged mechanical mixers to keep solids in suspension. After the second anoxic zone, the wastewater flows underneath and over the concrete baffle wall into the aerobic zone. At the bottom of the aerobic zone, there are submerged membrane disk diffusers to aerate the wastewater. After the aerobic zone, the ML flows to the membrane wet well.

Located in the membrane wet well are four submersible pumps, used to feed ML to the membrane tanks and provide adequate water for recirculation. The discharge lines of the pumps combine into a header pipe equipped with a magnetic flowmeter to measure ML flow to the membrane tanks.

2.4.1.4 Membrane Bioreactor System

ML from Aeration Tank 1 and 2 is distributed to four MBR tanks through the common header with automatic operator adjustable valves, which allows the operators to regulate the amount of flow to each MBR tank.

The MBR tanks contain ultra-filtration membranes. The membrane fibers create a physical barrier that prevents the passage of contaminants and solids larger than 0.04 microns into the treated water. Using a rotary lobe permeate pump, a vacuum is applied to a header connecting the membranes in a single MBR tank. The permeate is drawn through the membrane from the bulk fluid by a partial vacuum applied within the membrane porous hollow fiber support (lumen). The ME is conveyed via the rotary lobe pumps to the UV Disinfection System.

The separated sludge that accumulates in the MBR tank is returned to the aeration tank and sludge storage tank via gravity. The sludge that is returned to the aeration tank is known as return RAS. The sludge diverted to the sludge storage tank is known as waste activated sludge (WAS). An operator-controlled motor valve regulates the amount of sludge flow diverted to the aeration tanks and sludge storage tank.

2.4.1.5 Ultraviolet Disinfection System

Permeate from each MBR tank joins in a common header that transports the ME to the UV Disinfection System. The ME flow is split between three UV trains each containing three high intensity medium pressure UV disinfection vessels in series. Each train is installed with a magnetic flowmeter to monitor the flow through each UV train. The DE is discharged into a common header and transported to the standpipe.

2.4.1.6 Effluent Cooling and Disposal

The standpipe is used as a water supply for the plant water system (3W) and MBR backpulse cleanings. Additionally, the standpipe provides the necessary hydraulic head for the DE to flow through the cooling towers. The cooling towers decrease the temperature of DE before it is discharged to receiving water. If no cooling is necessary, then the cooling towers are bypassed. Three cooling towers are provided so one is out of service at all times to reduce algae growth.

The FE flows by gravity from the cooling towers or standpipe through a Parshall flume to an existing 14-inch outfall pipe. The outfall pipe discharges into Deuel Drain, which is a tributary to Paradise Cut and the San Joaquin River.

2.4.2 Solids Treatment Processes

The names and abbreviations for the solids flow streams throughout the plant are listed below.

1. Grit Slurry (GS)
2. Biosolids Cake (BSC)
3. Thickened Waste Activated Sludge (TWAS)
4. Digested Sludge (DS)
5. Waste Activated Sludge (WAS)

2.4.2.1 Screenings and Grit Disposal

The trash collected on the coarse bar screen will be deposited in a washer/compactor and then into a dumpster for landfill disposal.

The screenings collected from the fine bar screen will be washed to remove the fecal material. The fine screenings will be dewatered and compacted in a screw conveyor/compactor. The washed, dewatered, and compacted fine screenings will be deposited in a dumpster for disposal.

Grit settled out in the vortex grit chamber flows by gravity to grit pumps in the lower level of the headworks. There are two grit pumps, one operating, and one standby. The grit pumps

pump a GS (water and grit) up to a cyclone grit classifier where the grit is washed of additional organics and cleaned grit is deposited in a dumpster for disposal.

2.4.2.2 Sludge Storage Tank (SST)

The SST is part of the aeration tank system and provides additional stabilization and storage of the solids generated and removed in the liquid stream treatment processes prior to processing by the thickening and dewatering facilities. The sludge storage tank is thoroughly mixed by membrane diffusers.

2.4.2.3 Gravity Belt Thickener/Belt Filter Press

The GBT/BFP receives WAS from the SST. The GBT/BFP may be operated in two modes: (1) GBT thickening mode and (2) GBT/BFP dewatering mode. During the GBT thickening mode, sludge is fed to the GBT. The sludge is thickened from two percent to five percent solids, referred to as TWAS. TWAS is diverted from the GBT with a pneumatic or hydraulic diverter gate to the hopper of a progressing cavity pump that discharges the TWAS to the SST. During GBT/BFP dewatering mode, GBT flow continues from the GBT to the BFP. The BFP increases the TWAS solids concentration to 13-14 percent solids, referred to as BSC. The BSC travels on a screw conveyor to a truck loading area where it is deposited into roll-off bins for disposal off site at an appropriate landfill or licensed biosolids process facility.

2.5 NORMAL OPERATION

The WWTP design provides flexibility in the operation of each unit process. This flexibility allows the plant operators to change operational modes to allow for changing conditions. Redundant equipment has been provided in many areas to improve process reliability. Normal operation for these different treatment systems is discussed in the specific process chapters of this manual.

2.5.1 Raw Wastewater

The RWW treated at the WWTP is domestic wastewater and other wastewater from the institution.

2.5.2 Recycle Streams

Although the WWTP was designed to treat normal plant recycle or return flows, excess recycle flows can have a significant effect on the performance of individual unit processes. These recycle flows should be monitored regularly to prevent the overloading of treatment processes and possible biological process failure.

2.5.3 Septage

Septage from the California Department of Correction and Rehabilitation (CDCR) transfer buses is added upstream of the headworks. This allows preliminary treatment of the septage, which protects the equipment, in the subsequent processes at the WWTP. Domestic septage is normally partially digested and has a high solids and BOD content.

2.5.4 Stormwater

Stormwater is collected on the plant site through storm drains and routed to the drainage ditch located southeast of the new WWTP.

2.6 EMERGENCY OPERATION

Emergency operation procedures for each unit process are presented in the individual chapters for the specific unit processes.

2.7 STARTUP/SHUTDOWN PROCEDURES

Startup and shutdown procedures for each unit process are presented in the individual chapters for the specific processes. The process chapters describe the required procedures to put equipment into operation and to shutdown and secure equipment.

2.8 ALARM CONDITIONS

Equipment control and alarm functions for individual plant processes are provided locally and through the plant supervisory control and data acquisition (SCADA) system. Chapters on individual unit processes should be consulted for specific alarms and the appropriate operator response to alarm conditions.

2.8.1 Plant Control System

The SCADA system consists of programmable logic controllers (PLCs) for equipment operation and control, a fiber optic network for communication, and software graphics for operator interface with the PLCs. This system allows access to operate the plant from any of the operator interface stations (OISs) with security level access capability.

All critical plant equipment is monitored and controlled at the OIS. Some non-critical equipment can only be monitored at the OIS. The PLCs are supported by an uninterruptible power supply (UPS) to prevent a loss of control data during a power outage. Figure 2.7 illustrates the SCADA system architecture.

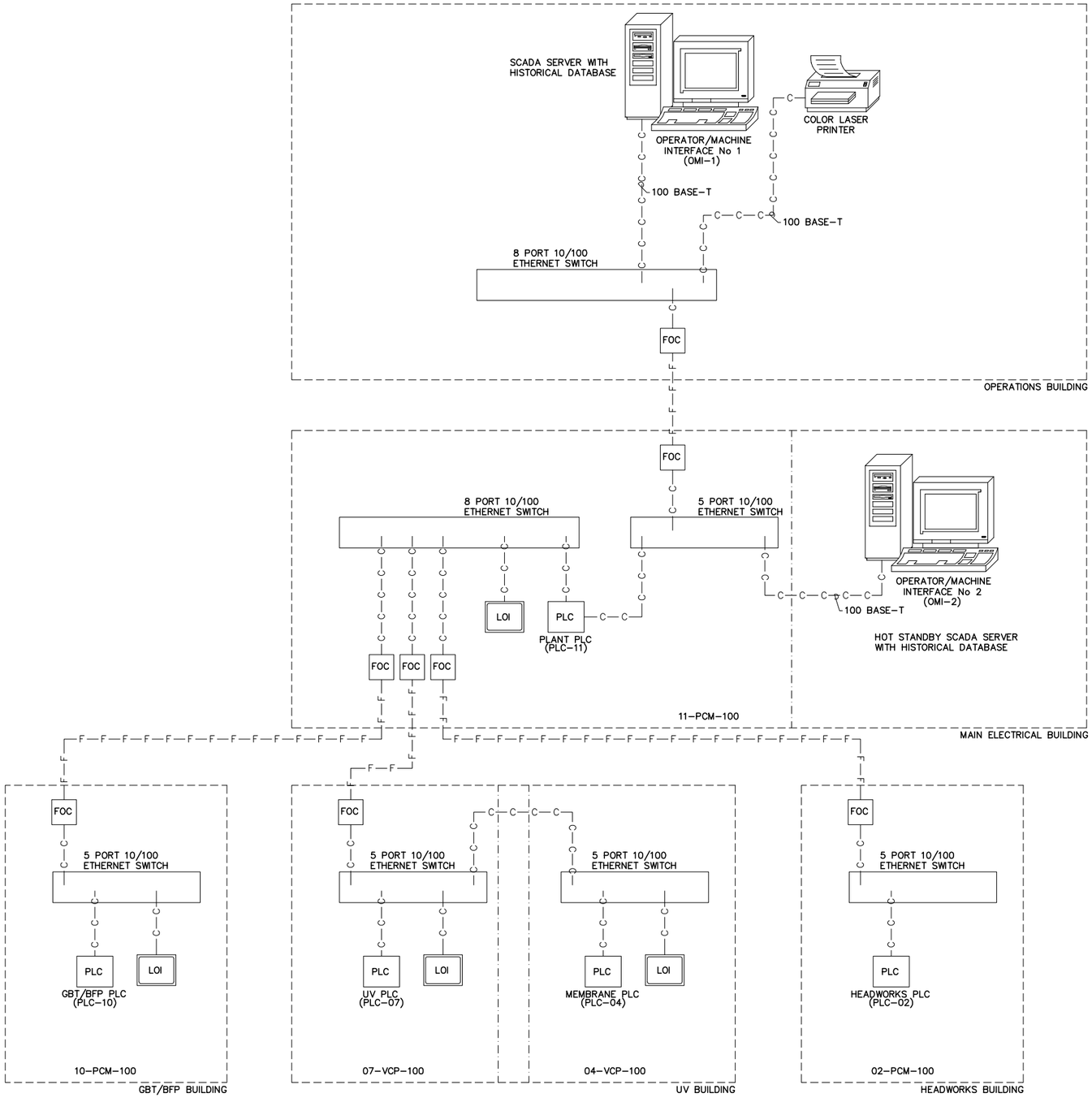

Figure No. 2.7

SCADA SYSTEM ARCHITECTURE

DEUEL VOCATIONAL INSTITUTION (DVI) NEW WWTP

CALIFORNIA DEPARTMENT OF CORRECTIONS AND REHABILITATION

carollo

Engineers...Working Wonders With Water ™

Normally, an operator controls equipment in the REMOTE mode through the SCADA system. Process changes are implemented by the operator entering new values for setpoints at the OIS. The PLC receives the new setpoints and the equipment is adjusted according to the program logic in the PLC. If desired, equipment can be controlled manually at the local control panel (LCP) and still be monitored at an OIS.

2.8.2 Plant Alarm System

Plant alarms are annunciated at the LCPs and at the OIS. Alarms will be acknowledged at both locations. Alarm setpoints can be changed to eliminate nuisance alarms if equipment is operated within the manufacturer's recommended guidelines. Procedures for proper response to different alarm conditions are discussed in the chapters on specific unit processes. A summary of plant alarms should be printed out regularly to develop a history of equipment alarms that can be used for maintenance and equipment troubleshooting purposes.

2.9 SAFETY

When working around wastewater treatment processes and equipment, an operator can encounter many different hazards and should be aware at all times. General safety information for specific unit processes is presented in the corresponding chapters of this manual. CDCR safety policies and procedures, and state and federal safety regulations should be followed at all times. The safety guidelines for each process and major pieces of equipment are not intended to supersede or supplement existing CDCR safety policies and procedures. When emergency, abnormal, or alarmed operating conditions occur, only fix the problem or shutdown if it can be accomplished safely. If it is not possible to correct a problem safely with available equipment, and immediate action is required to prevent an illegal discharge or to protect equipment, the operator should notify the Supervisor and obtain the necessary assistance and equipment to safely correct the problem.

2.10 MAINTENANCE

General maintenance information for specific unit processes and equipment is presented in the corresponding chapters of this manual, and detailed in the equipment manufacturer's O&M manuals. All equipment maintenance should be performed as recommended by the manufacturer to avoid excessive down time and to reduce the life cycle cost of the equipment.

Deuel Vocational Institution

New Wastewater Treatment Plant

O&M Manual
Headworks

TABLE OF CONTENTS

Page No.

Chapter 3 3-1

3.1 GENERAL PROCESS DESCRIPTION 3-1
3.2 DESIGN CRITERIA 3-2
3.3 COMPONENT/EQUIPMENT LISTINGS 3-4
3.4 COMPONENT DESCRIPTION 3-6
3.4.1 Influent Channel 3-6
3.4.2 Screening Handling System 3-9
3.4.3 Influent pumps 3-16
3.4.4 Headworks Ventilation System 3-18
3.4.5 Grit Removal System 3-19
3.4.6 Fine Screening 3-26
3.5 NORMAL OPERATION PROCEDURES 3-32
3.5.1 Influent Channel 3-32
3.5.2 Bar Screens 3-32
3.5.3 Screenings Washer and Compactor 3-33
3.5.4 Influent Wet Well 3-33
3.5.5 Grit Removal System 3-33
3.5.6 Rotary Drum Screens 3-34
3.5.7 Headworks Ventilation System 3-34
3.6 EMERGENCY OPERATION PROCEDURES 3-34
3.6.1 Power Outage 3-35
3.6.2 Equipment Malfunctions 3-35
3.6.3 Mechanical Climber Screen Obstruction 3-35
3.6.4 Screenings Washer/Compactor Failure 3-35
3.6.5 Influent Pump Failure 3-36
3.6.6 Grit Pump Failure 3-36
3.6.7 Grit Classifier Failure 3-36
3.7 STARTUP/SHUTDOWN PROCEDURES 3-36
3.7.1 Headworks 3-36
3.7.2 Influent Pumps 3-39
3.7.3 Headwork Ventilation System 3-40
3.7.4 Grit Removal 3-41
3.7.5 Rotary Drum Screens 3-44
3.8 ALARM CONDITIONS 3-46
3.8.1 Operational Strategies 3-46
3.8.2 Troubleshooting Strategies 3-52
3.9 SAFETY 3-62
3.9.1 Motors and Electrical Panels 3-62
3.9.2 Pumps 3-62
3.9.3 Miscellaneous Items 3-63

3.10 MAINTENANCE 3-64

Page No.

LIST OF TABLES

Table 3.1 Headworks Design Criteria 3-2
Table 3.2 Component/Equipment Listings 3-4
Table 3.3 Troubleshooting Guide For Mechanical Climber Screen 3-52
Table 3.4 Troubleshooting Guide For Fine Screens 3-54
Table 3.5 Troubleshooting Guide For Grit Chambers 3-59
Table 3.6 Troubleshooting Guide For Centrifugal Pumps 3-60

LIST OF FIGURES

Figure 3.1 Headworks Plan View 3-7
Figure 3.2 Headworks Sections and HVAC 3-8

LIST OF PHOTOS

Photo 3.1 Mechanical Climber Screen No. 1 3-10
Photo 3.2 Mechanical Climber Screen No. 1 Vendor Control Panel 3-11
Photo 3.3 Screenings Handling Equipment 3-14
Photo 3.4 Screenings Handling Equipment Vendor Control Panel 3-15
Photo 3.5 Vortex Grit Separator 3-20
Photo 3.6 Grit Pump No. 1 3-22
Photo 3.7 Grit Classifier and Cyclone Separator 3-25
Photo 3.8 Drum Screen No. 2 and Screenings Compactor 3-27
Photo 3.9 Drum Screen No. 2 and Screenings Compactor Local Control Panel 3-29

HEADWORKS

3.1 GENERAL PROCESS DESCRIPTION

The headworks processes at the Deuel Vocational Institution (DVI) New Wastewater Treatment Plant (WWTP) are provided to: (1) remove large and non-biodegradable solids from the incoming wastewater, (2) allow grit to settle out of the plant influent, and (3) measure plant influent flow.

The influent wastewater from the institution is conveyed to the headworks structure through an 18-inch PVC gravity sewer. After the influent flow enters the headworks structure, the flows enters one of two screen channels. Each channel contains a different type of coarse screen. One channel contains a mechanical climber screen and the second channel contains a manual bar screen for use when the mechanical screen is inoperative. The screen channels are placed in and out of service with slide gates. If the flow exceeds the mechanical climber screen hydraulic capacity, the gates are configured to allow passive overflow of raw wastewater to the manual bar screen. Screenings removed from the plant influent are conveyed to a screenings washer/compactor and disposed of in a dumpster to be hauled off site and properly disposed of at a refuge facility.

From the screening channel, the plant influent flows through slide gates into the influent wet well where it combines with water collected from the plant drain system. The plant drain (PD) is fed into the wet well by a 12-inch line. A chemical pretreatment with sodium bicarbonate is also added into the wet well for alkalinity control within the WWTP biological treatment process. Palmer Bowlus flume in a vault measures the PD flow prior to combining with the wastewater from the institution. The combined flow is pumped through a 10-inch header pipe equipped with an 8-inch magnetic flowmeter to measure influent flow. After measuring the flow, the wastewater discharges into a vortex grit system to remove grit. The grit removed is then pumped to a cyclone separator as grit slurry and is removed by a grit cyclone and classifier. The grit is discharged into dumpsters to be hauled off site and properly disposed of at a refuge facility. The wastewater from the vortex grit removal system flows by gravity through rotary drum screens for fine screening. Screenings removed are conveyed to a screenings washer/compactor and disposed of in a dumpster to be hauled off site and properly disposed of at a refuge facility.

Ventilation in the headworks structure is achieved by an exhaust and supply fan. Combustible gas detectors located in the headworks structure monitor combustible gas levels.

3.2 DESIGN CRITERIA

The design criteria for the headworks facility are presented in Table 3.1.

Table 3.1 Headworks Design Criteria DVI New Wastewater Treatment Plant California Department of Corrections and Rehabilitation		
Descriptions	**Units**	**Value**
Mechanical Climber Screen		
Type	Climber Screen	
Number	--	1
Channel Width	Feet	2.5
Channel Depth	Feet	6.83
Flow Capacity	mgd	2.10
Bar Spacing	Inch	1
Angle of Inclination	Degrees	80
Manual Bar Screen		
Number	--	1
Channel Width	Feet	2.5
Channel Depth	Feet	6.83
Flow Capacity	mgd	2.1
Bar Spacing	Inch	1.5
Screening Washer/Compactors		
Type	Screenings Press	
Number Coarse Screens	--	1
Size (Diameter)	Inch	9
Capacity	CF/HR	25
Influent Pumps		
Type	Submersible	
Drive Type	VFD	
Number	--	2 + 1 Standby
Capacity (each)	GPM @ feet TDH	870 @ 50
Grit Vortex Chamber		
Type	Mechanically Induced Vortex	
Number	--	1
Size (Diameter)	Feet	8
Maximum Capacity	mgd	2.6
Grit Slurry Pumps		
Type	Recessed Impeller	
Drive Type	Constant Speed/Belt Drive	
Number	--	1 + 1 Standby

Table 3.1 Headworks Design Criteria DVI New Wastewater Treatment Plant California Department of Corrections and Rehabilitation		
Descriptions	**Units**	**Value**
Capacity	gpm @ feet TDH	250 @ 19
Grit Cyclone Separator and Classifier		
Type	Grit Screw Conveyor w/ Cyclone	
Number	--	1
Size (Diameter)	Inch	12
Capacity @ 10 PSI	gpm	250
Fine Screens		
Type	Rotary Drum	
Number	--	1 + 1 Standby
Flow Capacity	mgd	2.5
Opening	MM	2
Screening Washer/Compactors		
Number Fine Screens	--	1 + 1 Standby
Size (Diameter)	Inch	9
Capacity	CF/HR	10
Headworks Supply Fan		
Type	Centrifugal Roof Supply	
Drive Type	Constant Speed	
Number	--	1
Capacity	cfm	1,725
Headworks Exhaust Fan		
Type	Up-blast Centrifugal Roof Exhauster	
Drive Type	Constant Speed	
Number	--	1
Capacity	cfm	1,725

3.3 COMPONENT/EQUIPMENT LISTINGS

Table 3.2 is a listing of the major components and equipment items, including the function and purpose of each, for the headworks processes.

Table 3.2 Component/Equipment Listings
DVI New Wastewater Treatment Plant
California Department of Corrections and Rehabilitation

Name	Tag No(s).	Qty.	Characteristics	Function/Purpose
Influent Composite Sampler	02-ASP-103	1	HACH, Refrigerated Sampler	Automatic sampling of plant influent flow.
Barscreen Inlet and Outlet Gates	02-GAT-110 02-GAT-111 02-GAT-120 02-GAT-121	4	30-inch by 72-inch, manually operated, slide gate	
Mechanical Climber Screen	02-MBS-110	1	1-hp, Constant speed climber screen manufactured by Infilco Degremont, Inc., parallel bars spaced 1-inch apart, 80-degree inclination	Screen large objects and rags from influent flow.
Manual Bar Screen	02-BS-120	1	Custom built stainless steel rack	Provides for manual screening of large objects and rags from influent flow.
Washer/Compactors	02-SWC-111	1	25-cubic feet/hour, Helico 200 Screenings Press manufactured by Infilco Degremont, Inc.	Remove organics and reduce volume of coarse screenings.
Influent Pumps	02-PMP-210 02-PMP-220 02-PMP-230	3	17.4-hp, Non-clog centrifugal submersible pumps with VFDs, 869 gpm @ 49.9 feet TDH manufactured by ABS Pumps, Inc.	Pump coarse screened influent from influent wet well to grit removal and rotary drum screens.
Grit Vortex Chamber	02-GRC-410	1	0.5-hp, Mechanically induced vortex manufactured by EIMCO Water Technologies	Removal of grit from plant influent flow.

Table 3.2 Component/Equipment Listings DVI New Wastewater Treatment Plant California Department of Corrections and Rehabilitation				
Name	**Tag No(s).**	**Qty.**	**Characteristics**	**Function/Purpose**
Grit Slurry Pumps	02-PMP-510 02-PMP-520	2	7.5-hp, 250 gpm @ 21 feet TDH, Centrifugal recessed impeller pumps manufactured by Wemco (Weir Specialty Pumps)	Pump grit out of grit chamber to grit classifier.
Grit Cyclone Separator and Classifier	02-CLA-500	1	1.0-hp, EIMCO Water Technologies	Dewater grit from grit chamber.
Rotary Drum Screens	02-DS-310 02-DS-320	2	Rotary Drum Screen manufactured by Waste Tech, Model RS2024-55	Screen objects greater than 2 mm.
Rotary Drum Screen Washer/Compactors	02-SWC-311 02-SWC-321	2	Screenings Compactor manufactured by Waste Tech, Model SPW 200	Remove organics and reduce volume of fine screenings.
Combustible Gas Monitor	02-AIT-203	1	Combustible Gas, 0-10% Oxygen, 0-25% H_2S, 0-20ppm	Monitor levels of hydrogen sulfide, methane, and oxygen in the headworks area.
Headworks Supply Fan	02-SF-001	1	1,725 cfm, Centrifugal Roof Supply	Supply airflow to headworks building to prevent buildup of heat, odor, and potentially toxic fumes.
Headworks Exhaust Fan	02-EF-002	1	1,725 cfm, Up-blast Centrifugal Roof Exhauster	Remove air from grit basement to prevent buildup of heat and odor.
Motor Control Center P3	MCC-P3	1		Distribution of power to headworks.

Table 3.2 Component/Equipment Listings DVI New Wastewater Treatment Plant California Department of Corrections and Rehabilitation				
Name	**Tag No(s).**	**Qty.**	**Characteristics**	**Function/Purpose**
Major Instruments				
Influent Flowmeter Element	02-FE-202	1	0-3,000 gpm, 8-inch Magnetic Flowmeter	Measurement of plant influent and plant drain flow.
Plant Drain Flowmeter Element	02-FE-201	1	0-1,300 gpm, Palmer Bowlus flume.	Measures plant recycle flow to be subtracted from 02-FE-202.
Combustible Gas Monitor	02-AIT-203	1	Combustible Gas, 0-10% Oxygen, 0-25% H_2S, 0-20ppm	Monitor levels of hydrogen sulfide, methane, and oxygen in the headworks area.
Ultrasonic Level Controller	02-LIT-201	1	0 - 5 ft, ultrasonic level transmitter	

3.4 COMPONENT DESCRIPTION

The major components of the headworks facility and their functions are outlined below. Figure 3.1 illustrates the layout of the headworks facility including the associated equipment and piping. Figure 3.2 shows the section for the headworks facility and associated equipment and piping.

3.4.1 Influent Channel

3.4.1.1 Raw Wastewater Inlet Pipe

Influent wastewater from the institution is conveyed to the headworks structure through an 18-inch raw wastewater (RWW) PVC gravity sewer.

3.4.1.2 Influent Composite Sampler

The influent composite auto sampler (02-ASP-103) is maintained by the plant staff and used for collecting samples over a 24-hour period. The auto sampler collects flow-proportionate samples and composites the aliquots in a five-gallon polyethylene jug. The sampler collects flow from the 18-inch sewer entering the headworks structure. During each sampling event, positive purges before and after each aliquot sampling prevents clogging and cross connection. The composite sample is maintained between zero and four degrees Celsius. The external power source for the influent composite sampler originates from lighting panel LP-P3, which is located in the headworks electrical room.

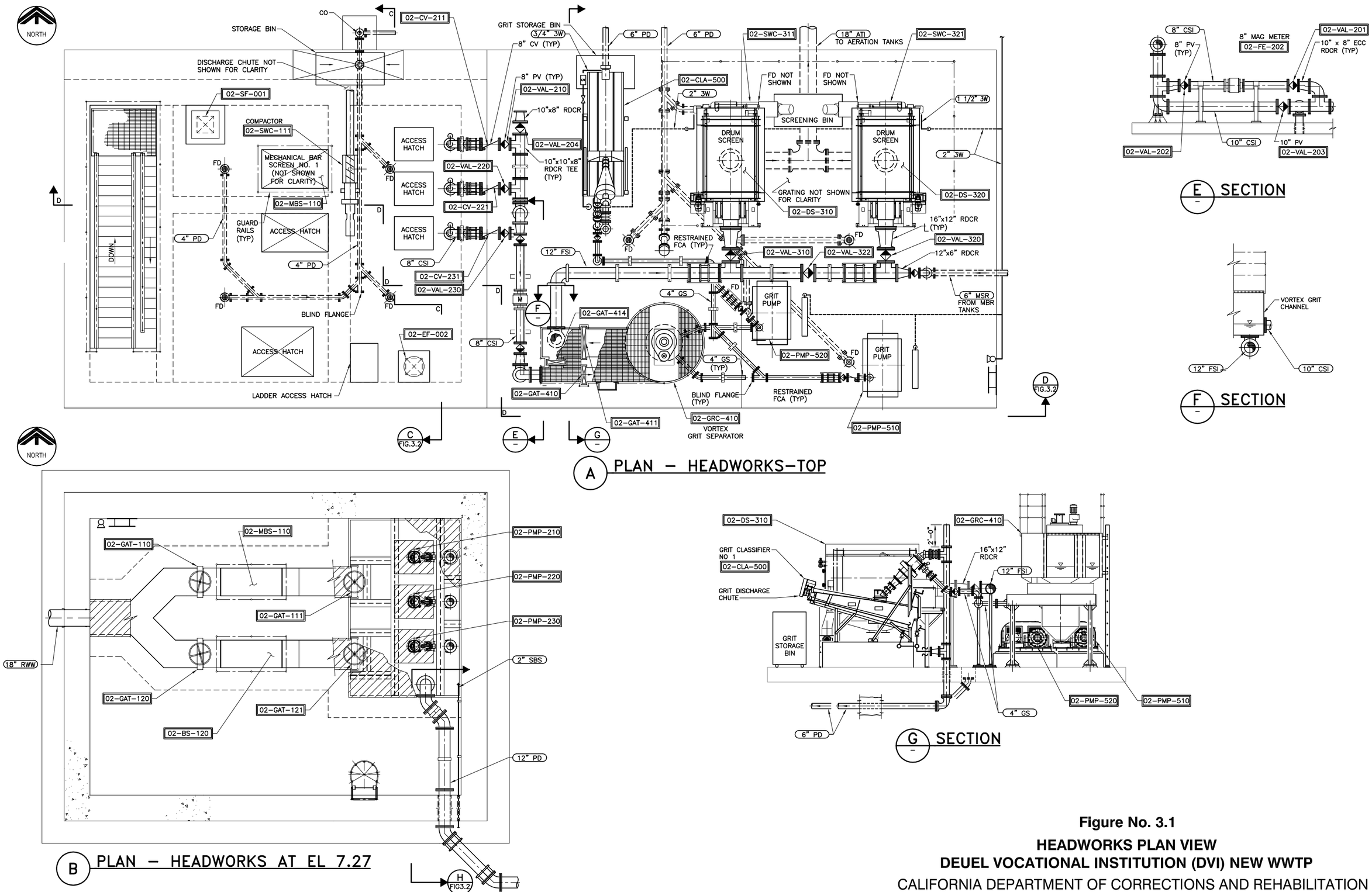

Figure No. 3.1

HEADWORKS PLAN VIEW

DEUEL VOCATIONAL INSTITUTION (DVI) NEW WWTP

CALIFORNIA DEPARTMENT OF CORRECTIONS AND REHABILITATION

carollo

Engineers...Working Wonders With Water ™

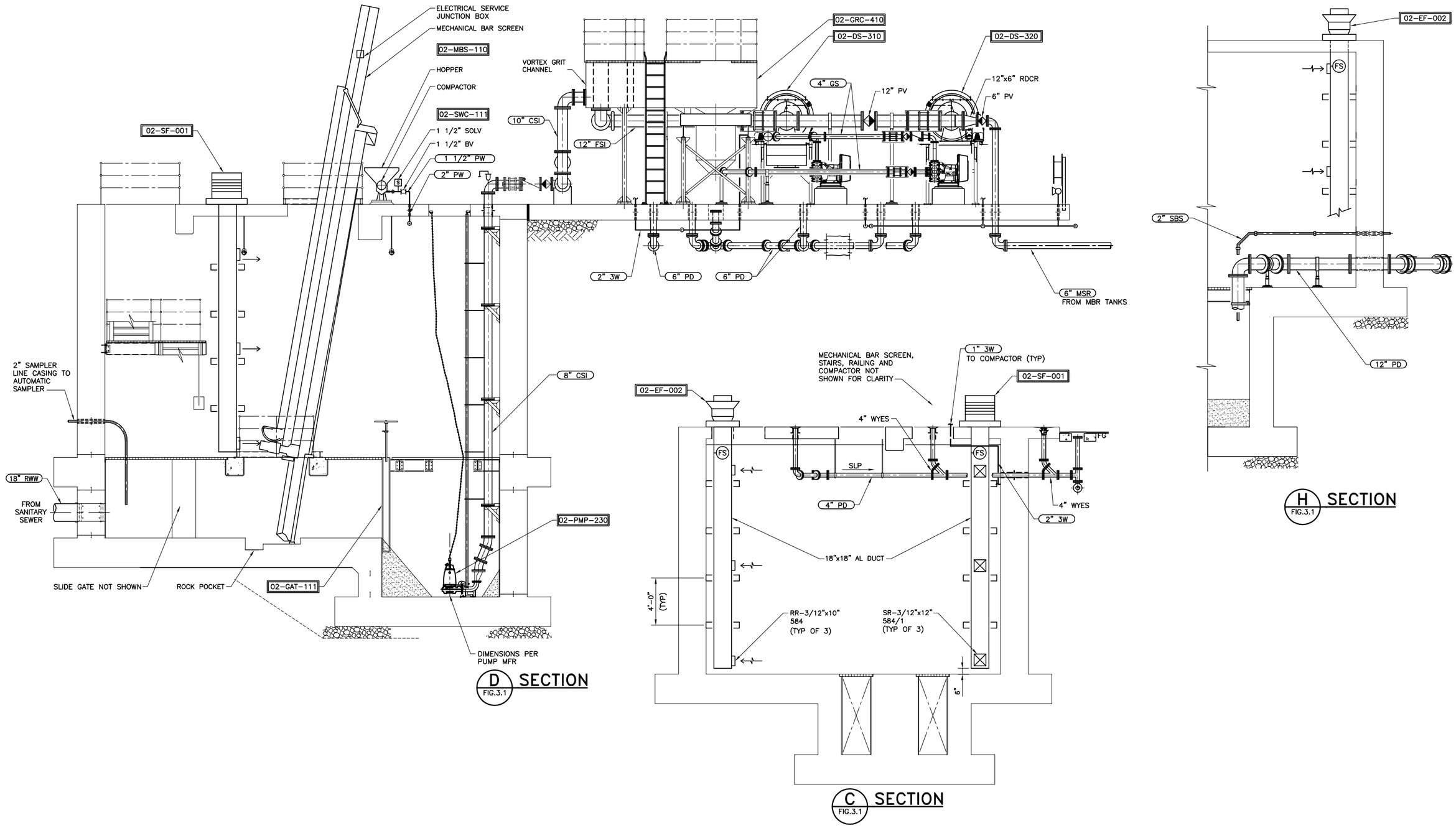

Figure No. 3.2

HEADWORKS SECTIONS AND HVAC
DEUEL VOCATIONAL INSTITUTION (DVI) NEW WWTP

CALIFORNIA DEPARTMENT OF CORRECTIONS AND REHABILITATION

carollo
Engineers...Working Wonders With Water ™

3.4.2 Screening Handling System

After the influent flow enters the headworks structure, it flows into the influent channel. The influent channel divides into two screening channels. Each channel contains a different screen.

The northern channel contains the mechanical climber screen and the southern channel contains the manual bar screen. The mechanical climber screen is normally operated at all times; however, if it is inoperative, the manual bar screen will be used.

The screen channels are placed in and out of service with upstream slide gates (02-GAT-110 and 02-GAT-111), and downstream slide gates (GAT-120 and GAT-121). If the flow exceeds the mechanical climber screen hydraulic capacity, the slide gates are configured to allow passive overflow of RWW to the manual bar screen. Screenings removed from the plant influent by the mechanical climber screen are conveyed to a screenings washer/compactor.

3.4.2.1 <u>Mechanical Climber Screen</u>

The mechanical climber screen (02-MBS-110) removes non-biodegradable solids (e.g., rags) and other larger-sized objects that could damage, impair, or clog pumps, valves, pipelines, and other appurtenances downstream in the treatment process. The mechanical climber screen is located in the northern channel; refer to Figure 3.1. The mechanical climber screen is normally in service at all times; however, if it is inoperative, the manual bar screen will be used. The mechanical climber screen will operate for flows up to 2.1 million gallons per day (mgd). Mechanical Climber Screen No. 1 is shown in Photo 3.1.

The main component of the climber screen is the screen and the rake. The screen is a series of parallel bars spaced one-inch apart. The wastewater flows through the open space, and the materials are retained on the screen face. A traveling rake periodically cleans the screen by bringing the solids up the face of the screen. The rake is equipped with tines, which mesh with the bar screen to catch and move debris from the screen to the discharge chute.

3.4.2.1.1 *Mechanical Climber Screen Controls*

The vendor control panel (VCP) for the mechanical climber screen (02-MBS-110) contains HAND-OFF-AUTO (H-O-A) and FORWARD-OFF-REVERSE selector switches. The local control panel (LCP) is located adjacent to the equipment. An EMERGENCY STOP pushbutton is also located adjacent to the equipment. In both HAND and AUTO position, the climber screen (02-MBS-110) controls are interlocked with the controls for the screenings washer/compactor (02-SWC-111). Thus, when the climber screen is activated to start operating, the screenings washer/compactor will start operating. Alternatively, if the washer/compactor fails to start after a preset time, the climber screen will be shutdown. A photo of the Mechanical Climber Screen Vendor Control Panel is shown in Photo 3.2.

Mechanical Climber Screen No. 1

PHOTO 3.1

California Department of Corrections
and Rehabilitation
Deuel Vocational Institution Wastewater Treatment Plant
Operations and Maintenance Manual

carollo
Engineers...Working Wonders With Water®

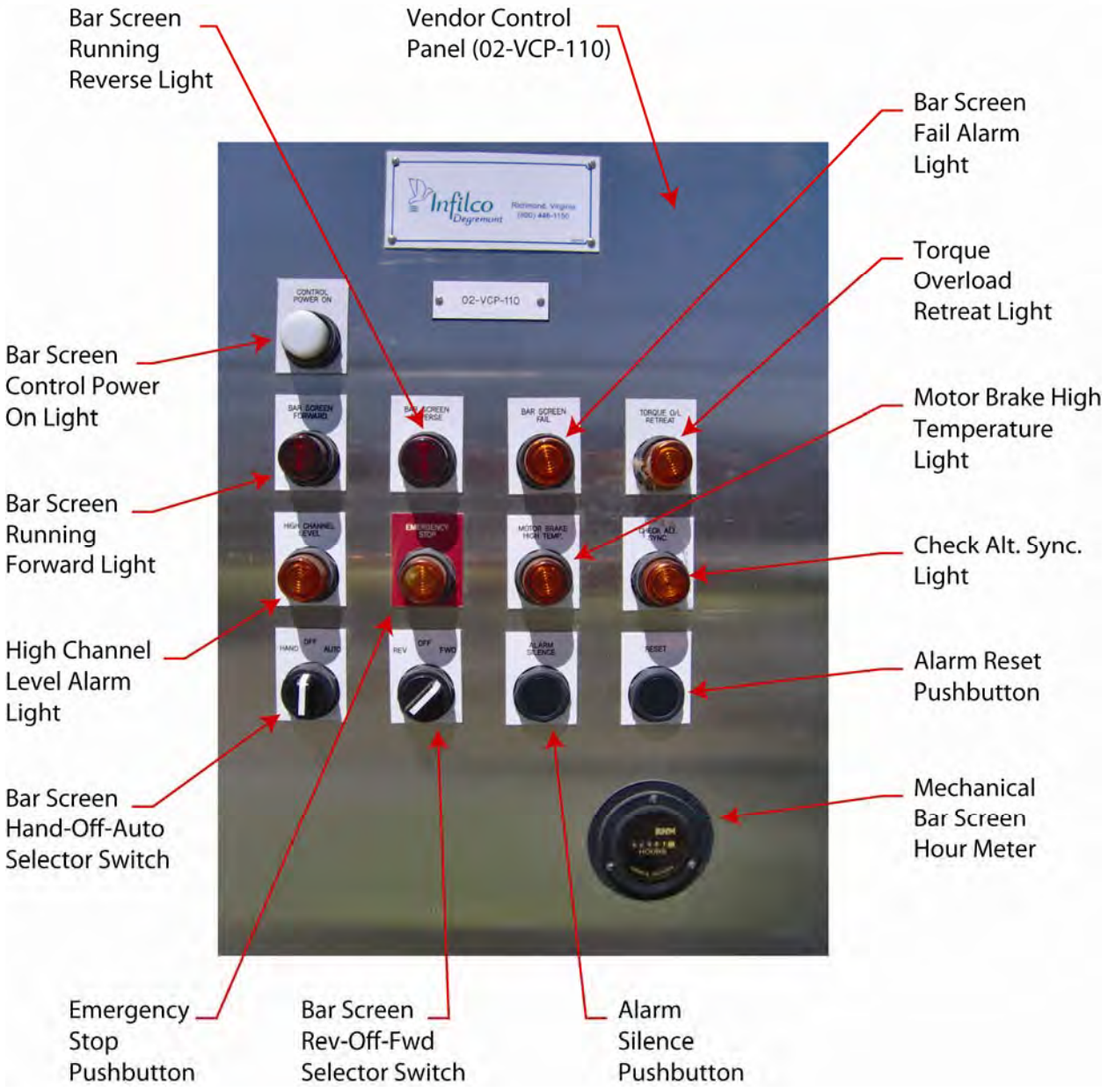

Mechanical Climber Screen No. 1
Vendor Control Panel

PHOTO 3.2

California Department of Corrections
and Rehabilitation
Deuel Vocational Institution Wastewater Treatment Plant
Operations and Maintenance Manual

carollo
Engineers...Working Wonders With Water®

H:\Client\CDC SAC\6927\6927R11 - DVI - DD and CD Phase\O&M Manual\O&MManualPhotos\WordFiles\PhotoNo3.2.doc

1. With the H-O-A selector switch at the VCP in the **HAND** position, the climber screen is controlled manually by the operator using the **FORWARD-OFF-REVERSE** selector switch.

2. With the H-O-A selector switch at the VCP in the **OFF** position, the climber screen is prohibited from operating.

3. With the H-O-A selector switch at the VCP in the **AUTO** position, the climber screen is controlled by the climber screen programmable logic controller (PLC).

Normal operation for the climber screen is AUTO control mode. In AUTO control mode, the climber screen rotates to remove collected screenings either based on an ultrasonic differential water level sensing controller or timer control as follows:

Ultrasonic Level Sensing Controller:

The climber screen is equipped with an ultrasonic differential level sensing controller. Ultrasonic level transmitters provided upstream (02-LE-101A) and downstream (02-LE-101B) of the climber screen measure the differential water level. When the measured differential water level in the channel is high (i.e., high head loss across the climber screen), the climber screen will bypass the TIMER control settings and start operating to remove the collected screenings. The rake continues to operate until it clears the bar rack and the differential level is lowered below the controller's setpoint, deactivating the liquid level control.

Timer Control:

The climber screen interval timer is utilized to initiate the cleaning cycle in conjunction with the level control. Once the climber screen operation is initiated by the time, the cleaning action will proceed until the carriage travels to the top of the frame and remains idle until either the level control or time initiates the cycle again. Whenever a cleaning cycle is performed, the interval timer is reset.

3.4.2.2 Manual Bar Screen

A manually cleaned bar screen (02-BS-120) is located in the southern channel to remove the larger objects from the wastewater flow during bypass of the climber screen; refer to Figure 3.1. This bar screen is normally isolated by stop and sluice gates. Water depth in this channel varies as it does in the climber screen channel. Screening are removed with a hand rake and deposited in a bucket or container, which are emptied in the dumpster at ground level. The manual bar screen is only used if the mechanical climber screen is out of service.

3.4.2.3 Screenings Washer/Compactor

The screenings washer/compactor (02-SWC-111) is designed to remove water and compact coarse screened materials discharged from the climber screen. The screenings are discharged from the climber screen into a hopper on the washer/compactor. Sprayers add 3W to wash down the screened materials, which resuspends organic material by rinsing the organics out of the screening material. A screw moves the rinsed screenings into the compaction zone where the excess water is forced from the screenings; thus reducing the volume of material required for disposal. The removed water containing organics drains via the plant drain system to the influent wet well and treated with the rest of the wastewater flow. The dewatered screenings are discharged into a dumpster for proper disposal at a refuge site. A photo of the Screening Handling Equipment is shown in Photo 3.3.

3.4.2.3.1 *Washer/Compactor Controls*

The VCP for the Screenings Washer/Compactor (02-SWC-311) contains a H-O-A selector switch, which is located adjacent to the equipment. A separate local control station contains a FORWARD-OFF-REVERSE selector switch. The EMERGENY STOP safety pull wire is located adjacent to the equipment and will immediately stop the unit if pulled. Activation of the safety pull wire will generate an alarm at the supervisory c0ontrol and data acquisition (SCADA) system. The operational status and alarms for the Screening Washer/Compactor is displayed at the SCADA system. Photo 3.4 shows the Screening Handling Equipment VCP.

1. With the H-O-A selector switch at the VCP in the **HAND** position, the screenings washer/compactor is controlled manually by the operator using the separate local station **FORWARD-OFF-REVERSE** selector switch.

2. With the H-O-A selector switch at the VCP in the **OFF** position, the screenings washer/compactor is prohibited from operating.

3. With the H-O-A selector switch at the VCP in the **AUTO** position, the screenings washer/compactor is controlled by the climber screen PLC.

Normal operation for the washer/compactor is AUTO control mode. In AUTO control mode, the washer/compactors (02-SWC-111) controls are interlocked with the controls of the climber screen (02-MBS-110). Thus, when the climber screen is activated to start operating, the washer/compactor will start operating and continue to run for an adjustable period after the screens have stopped. If the washer/compactors fail to start after a preset time (adjustable zero to two minutes), the climber screen will be shutdown.

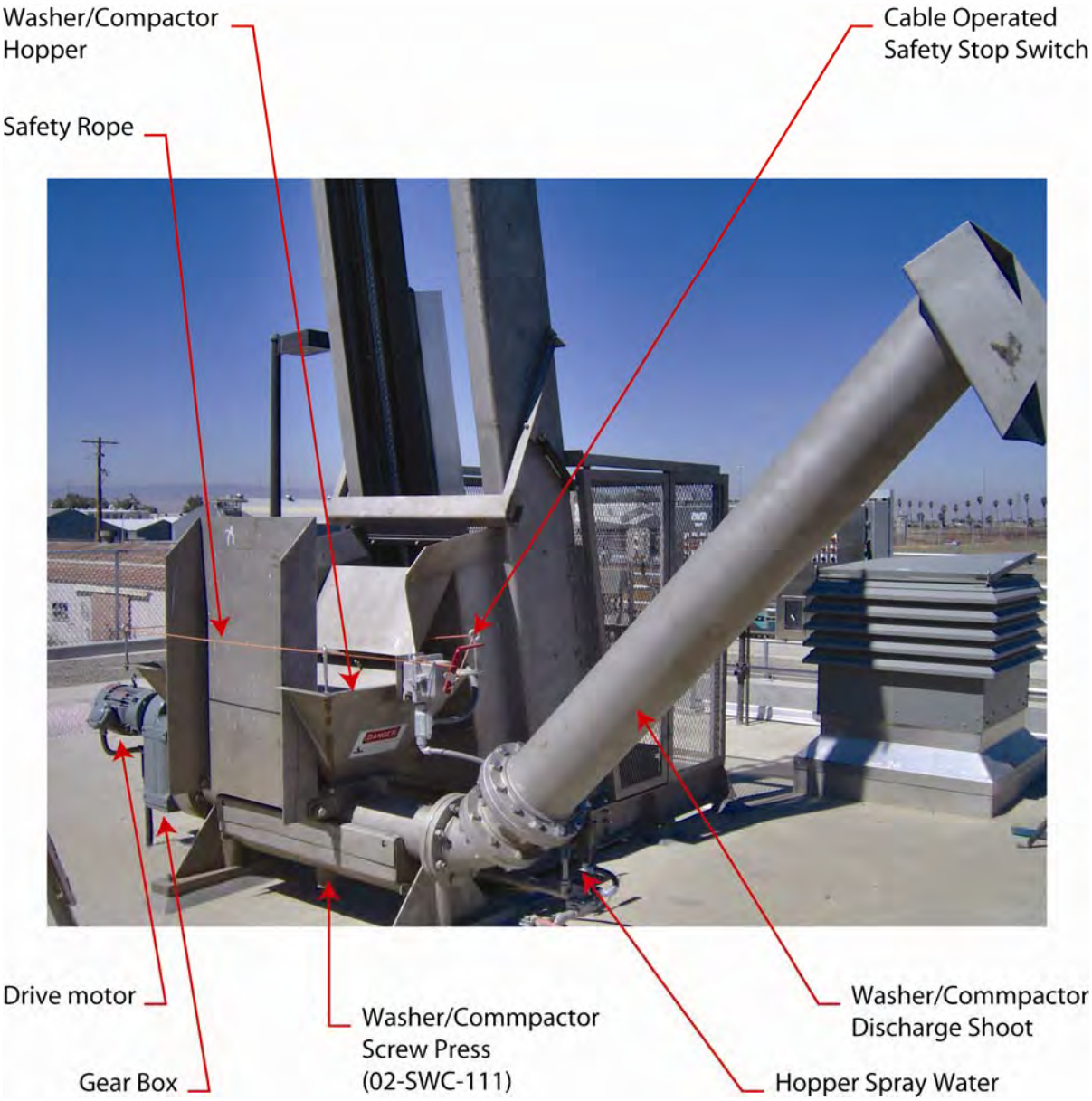

Screenings Handling Equipment

PHOTO 3.3

California Department of Corrections
and Rehabilitation
Deuel Vocational Institution Wastewater Treatment Plant
Operations and Maintenance Manual

carollo
Engineers...Working Wonders With Water®

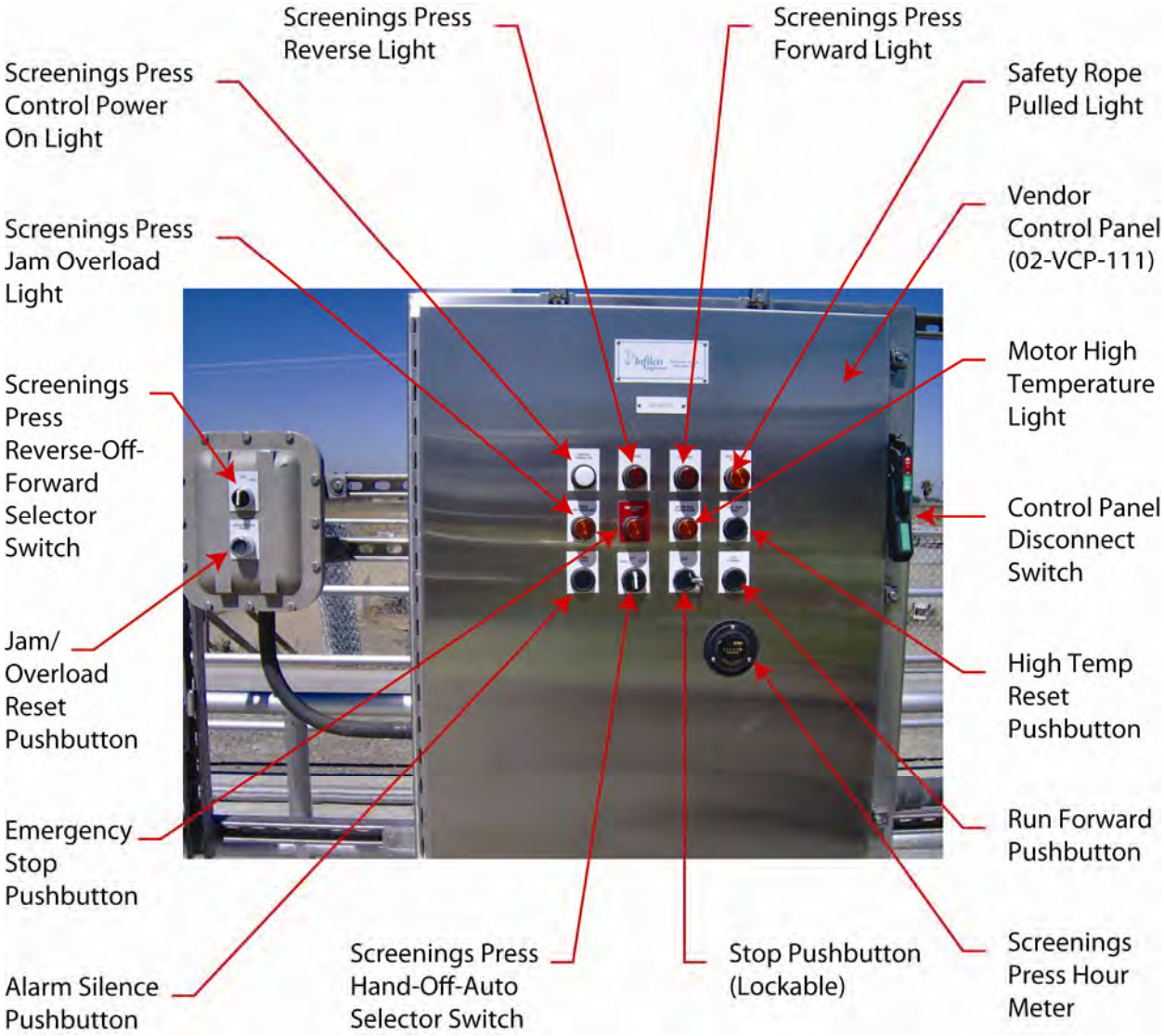

Screenings Handling Equipment
Vendor Control Panel

PHOTO 3.4

California Department of Corrections
and Rehabilitation
Deuel Vocational Institution Wastewater Treatment Plant
Operations and Maintenance Manual

carollo
Engineers...Working Wonders With Water®

3.4.3 Influent pumps

The flow entering the influent wet well is conveyed to the vortex grit system via three 17.4-hp, centrifugal non-clog submersible type pumps (02-PMP-210, 02-PMP-220, and 02-PMP-230) manufactured by ABS Pumps, Inc. Each pump has been designed to operate at a capacity of 869 at a Total Dynamic Head (TDH) of 49.9 feet. Two pumps are designed for running continuously while the third one acts as a standby unit. Each pump has a dedicated variable frequency drive (VFD). Based on a selector, the pumps shall operate in a lead/lag/standby fashion to maintain a level setpoint (LSP) in the influent wet well.

3.4.3.1 Influent Pump Controls

Each influent pump (02-PMP-210, 02-PMP-220, and 02-PMP-230) has start/lockout/stop/RESET pushbuttons and a LOCAL-OFF-REMOTE (L-O-R) selector switch at Motor Control Center-P3 (MCC-P3). Also located at the MCC-P3 is the VFD for each pump, which consists of a manual speed potentiometer that can be used to locally adjust the speed of the pump.

1. With the L-O-R selector switch at MCC-P3 in the **LOCAL** position, the influent pump is controlled manually by the operator using the **START/STOP** pushbuttons and **SPEED** potentiometer.
2. With the L-O-R selector switch at MCC-P3 in the **OFF** position, the influent pump is prohibited from running.
3. With the L-O-R selector switch at MCC-P3 in the **REMOTE** position, the influent pump is controlled through the PLC:
    a. With the AUTO/MANUAL pushbutton at the Influent Wet Well Human Machine Interface (HMI) pop-up window in **MANUAL** mode, the selected influent pump is controlled manually by the operator using the **START/STOP** pushbuttons and entering a percent **SPEED**.
    b. With the AUTO/MANUAL pushbutton at the Influent Wet Well HMI pop-up window in **AUTO** mode, the selected influent pump is controlled by the PLC.

Normal operation for the influent pumps is REMOTE-AUTO control mode. In REMOTE-AUTO control mode, influent pump operation is controlled by the logic resident in the SCADA system PLC. The PLC receives a 4-20 milliampere (mA) signal from the influent wet well level transmitter (02-LIT-201) and utilizes an algorithm to maintain an operator adjustable LSP (initially set at seven feet from the bottom of wet well) by controlling the lead and lag pumps, on/off, and speed control. The VFD of the operating pump(s) shall transmit a 4-20 mA signal, which is proportional to pump speed. The PLC shall utilize the pump speed signal to determine if the pump should operate at minimum speed (initially set at 50 percent) or maximum speed (initially set at 100 percent). Under no circumstances will the pump run at a speed less than 50 percent (30 Hz).

When the influent flow is too low for the lead pump to maintain the LSP at minimum speed, the lead influent pump will start and stop based on start and stop levels. The second and third influent pumps are designated as standby pumps. The stop level is the LSP minus three feet. The start level is the LSP. Both levels are operator adjustable. Once the start level is obtained, the lead pump will come on at minimum speed. If the pump is required to run at greater than minimum speed to maintain the LSP, normal operation is resumed; otherwise the pump will remain at minimum speed until the stop level is reached again.

When the wet well level reaches the LSP for more than an adjustable time delay (initially set at 20 seconds), the lead pump shall start at minimum speed and modulate speed to maintain the LSP. If the level increases and remains above the LSP continuously for more than an adjustable time delay with the lead pump running at maximum speed, the lead pump will ramp down to 65 percent and the lag pump will start at the same speed. Both pumps increase speed together to maintain the LSP.

With two pumps running, if the wet well level decreases and remains below the LSP continuously for more than the adjustable time delay with the pumps running at 65 percent, the lead pump will stop, and the lag pump will ramp up to 100 percent of maximum speed then reduce in speed to maintain the LSP.

If the PLC attempts to run a pump and does not receive a PUMP ON signal within an adjustable time (initially set to 10 seconds), the PLC will lock out the pump and initiate a FAIL TO START alarm. The pump will remain locked out until RESET selection has been made. The start sequence will then be shifted to the next available pump (i.e., from LEAD to LAG or LAG to STANDBY). This is a first in first out (FIFO) configuration; thus, when a new pump call is generated, the system will automatically rotate to the next available pump.

All of the pumps will shutdown via a hardwired float switch interlock to the VFDs when the wet well water surface elevation drops below the low LSP elevation. High and low level alarms are displayed at the operator interface system (OIS). The OIS also displays pump run time, speed, and fail status. When a VFD failure or pump motor winding high temperature/moisture is detected, a pump shuts down and a VFD FAILED and PUMP FAILED alarm, respectively, is annunciated at the OIS. When the floats hit the high-high float switch, two pumps at 100 percent speed will run until the LSP is reached. This assumes that the PLC has failed.

3.4.3.2 Plant Drain Flowmeter

The PD connects to the influent wet well upstream of the influent flow stream. The PD flow rate is continuously measured by a Palmer Bowlus flume (02-FE-201). The PD flow rate may be read at the indicating signal converter/transmitter mounted on the adjacent wall to the flume site. The flume has a rated capacity of 0 to 1,300 gallons per minute (gpm). The PD flow rate will also be indicated on the SCADA system. The external power source for the flow transmitter is from lighting panel LP-P3, which is located in headworks electrical room.

3.4.3.3 Influent Flowmeter

The plant flow stream is continuously measured by an 8-inch magnetic flow meter (02-FE-202) for regulatory and process control purposes. The plant influent flow rate may be read at the indicating signal converter/transmitter mounted on the adjacent wall to the meter site. The flow meter has a rated capacity of 0 to 3,000 gpm. The influent flow rate will also be indicated on the SCADA system. The meter is located on the influent pipeline after the influent pumps; refer to Figure 3.1. To accurately report the influent flow, the PD flow must be subtracted from the influent flowmeter readings. The external power source for the flow transmitter is from lighting panel LP-P3, which is located in headworks electrical room.

3.4.4 Headworks Ventilation System

3.4.4.1 Headworks Supply Fan

Ventilation of malodorous air and prevention of gas buildup in the headworks structure is provided by a centrifugal type roof supply fan (02-SF-001) shown in Figure 3.2. The headworks supply fan has a minimum capacity of 1,752 cubic feet per minute (cfm).

3.4.4.1.1 *Headworks Supply Fan Controls*

The external power source for the headworks supply fan originates from lighting panel LP-P3, which is located in the headworks electrical room. An ON/OFF breaker is provided at LP-P3. The headworks supply fan will be manually operated on a continuous basis.

3.4.4.2 Headworks Exhaust Fan

Ventilation of malodorous air and prevention of gas buildup in the headworks structure is provided by an up-blast centrifugal type roof exhaust fan (02-EF-002) shown in Figure 3.2. The headworks exhaust fan has a minimum capacity of 1,752 cfm.

3.4.4.2.1 *Headworks Exhaust Fan Controls*

The external power source for the headworks exhaust fan originates from lighting panel LP-P3, which is located in the headworks electrical room. An ON/OFF breaker is provided at LP-P3. The headworks exhaust fan will be manually operated on a continuous basis.

3.4.4.3 Combustible Gas Monitor

A combustible gas monitor will measure hydrogen sulfide, oxygen gas, and methane levels in the influent structure. Detectors shall monitor the combustible gas level in the influent structure and transmit a signal to the PLC for reporting and control purposes in accordance with NFPA 820. The signal shall provide a lower explosive level (LEL) limit, oxygen gas, and hydrogen sulfide safety for any gases escaping from the foul air system (02-AIT-203A, 02-AIT-203B, and 02-AIT-203C, respectively). A warning alarm will be displayed on the OIS, indicating the presence of elevated gas levels (level set by operator). Visual and audible alarms will be provided at the entrance to the influent structure to insure protection

of personnel. The operator must take steps to manually ventilate the headworks and RESET the alarm before entering the influent structure.

3.4.5 Grit Removal System

After the influent meter, the fine-screened influent is conveyed into a grit removal system. The grit removal system at the DVI New WWTP consists of the grit vortex chamber, grit slurry pumps, and grit cyclone separator and classifier. The grit removal system is placed in and out of service by three isolation slide gates (GAT-410, GAT-411, and GAT-414). Closing GAT-414 directs the wastewater flow into the grit removal system. Alternatively, closing GAT-410 and GAT-411 isolates the grit removal system for maintenance.

Grit is generally inorganic material with a specific gravity high enough to cause rapid settling. Materials that normally settle in the grit removal process include sand, gravel, cinders, metal pieces, corn kernels, and grains. Grit removal is necessary to prevent: (1) excessive wear of wastewater equipment (e.g., pumps and membranes); (2) abrasion and wear of sludge handling equipment; (3) formation of heavy deposits in pipes and channels; (4) grit accumulation in the aeration tanks, and (5) loss of treatment volume in the treatment structures.

3.4.5.1 Grit Vortex Chamber

As wastewater enters the eight-foot diameter grit chamber (02-GRC-410), the velocity of the flow is reduced to allow the grit to settle out by gravity and separate from the flow. The wastewater flow is introduced tangentially into the chamber and exits 270 degrees from the inlet to induce a rotation in the wastewater; refer to Figure 3.1. A grit mixer (02-GRC-410) rotates in the grit chamber to maintain flow rotation. This rotation helps maintain velocities to promote suspension of lighter organic material while allowing heavier predominately inorganic material to settle. If the velocity is too great, grit can be carried out of the grit chamber and into downstream processes. If the velocity is too low, large amounts of organic material can settle and create significant odor problems. The settled grit collects in the grit chamber hopper. 3W is added to the hopper via a water scour solenoid valve (02-SV-410) to fluidize the accumulated grit before its extracted. The grit slurry is extracted from the hopper and transported to the classifier via pumps. A photo of the Vortex Grit Separator is shown in Photo 3.5.

3.4.5.2 Grit Mixer

The grit mixer (02-GRC-410) rotates in the grit chamber to maintain flow rotation. The rotation helps maintain velocities to promote suspension of lighter organic material while allowing heavier predominately inorganic material to settle.

Vortex Grit Separator

PHOTO 3.5

California Department of Corrections
and Rehabilitation
Deuel Vocational Institution Wastewater Treatment Plant
Operations and Maintenance Manual

carollo
Engineers...Working Wonders With Water®

3.4.5.2.1 *Grit Mixer Controls*

Grit Basin Mixer Impeller (02-GRC-410) can be controlled by the PLC, through the SCADA system, or locally using START/STOP pushbuttons and the L-O-R selector switch located on the VCP. The operational status and alarms of each grit basin impeller is displayed at the SCADA system.

1. With the L-O-R selector switch at the VCP in the **LOCAL** position, the mixer impeller is controlled manually by the operator using the **START/STOP** pushbuttons.
2. With the L-O-R selector switch at the VCP in the **OFF** position, the mixer impeller is prohibited from running.
3. With the L-O-R selector switch at the VCP in the **REMOTE** position, the mixer impeller is controlled through the PLC:
    a. At the Grit Removal HMI pop-up window, the mixer is controlled manually by the operator using the **START/STOP** pushbuttons.

Normal operation for the grit basin impeller is REMOTE control mode. In REMOTE control mode, the grit mixer runs continuously and only stops for maintenance or during equipment failure/alarm conditions. The VCP includes hardwired interlocks to shutdown the grit mixer if high torque, high temperature, or motor overload conditions are detected.

3.4.5.3 Grit Slurry Pumps

One of two 7.5-hp, recessed impeller type grit slurry pumps (02-PMP-510 and 02-PMP-520) manufactured by Wemco (Weir Specialty Pumps) will transfer the accumulated grit from the grit chamber hopper to the grit classifier as shown in Figure 3.1. The pumping capacity of each pump has been designed to operate at a capacity of 864 at a TDH of 21 feet. Only one pump will operate during normal operation while the second pump is for standby service. Both pumps are centrifugal recessed impeller pumps; the impeller is mounted out of the flow path between the pump inlet and discharge connection allowing pumped solids not to flow through the impeller.

This enables the pump to handle large diameter solids and reduces the wear on the impeller. Photo 3.6 shows Grit Pump No. 1.

3.4.5.3.1 *Grit Slurry Pump Controls*

Grit Slurry Pump Nos. 1 and 2 (02-PMP-510 and 02-PMP-520) can be controlled by the PLC, through the SCADA system, or locally using START/STOP pushbuttons and the L-O-R selector switch at MCC-P3, which is located in the headworks electrical building. The operational status and alarms of each grit pump is displayed at the SCADA system.

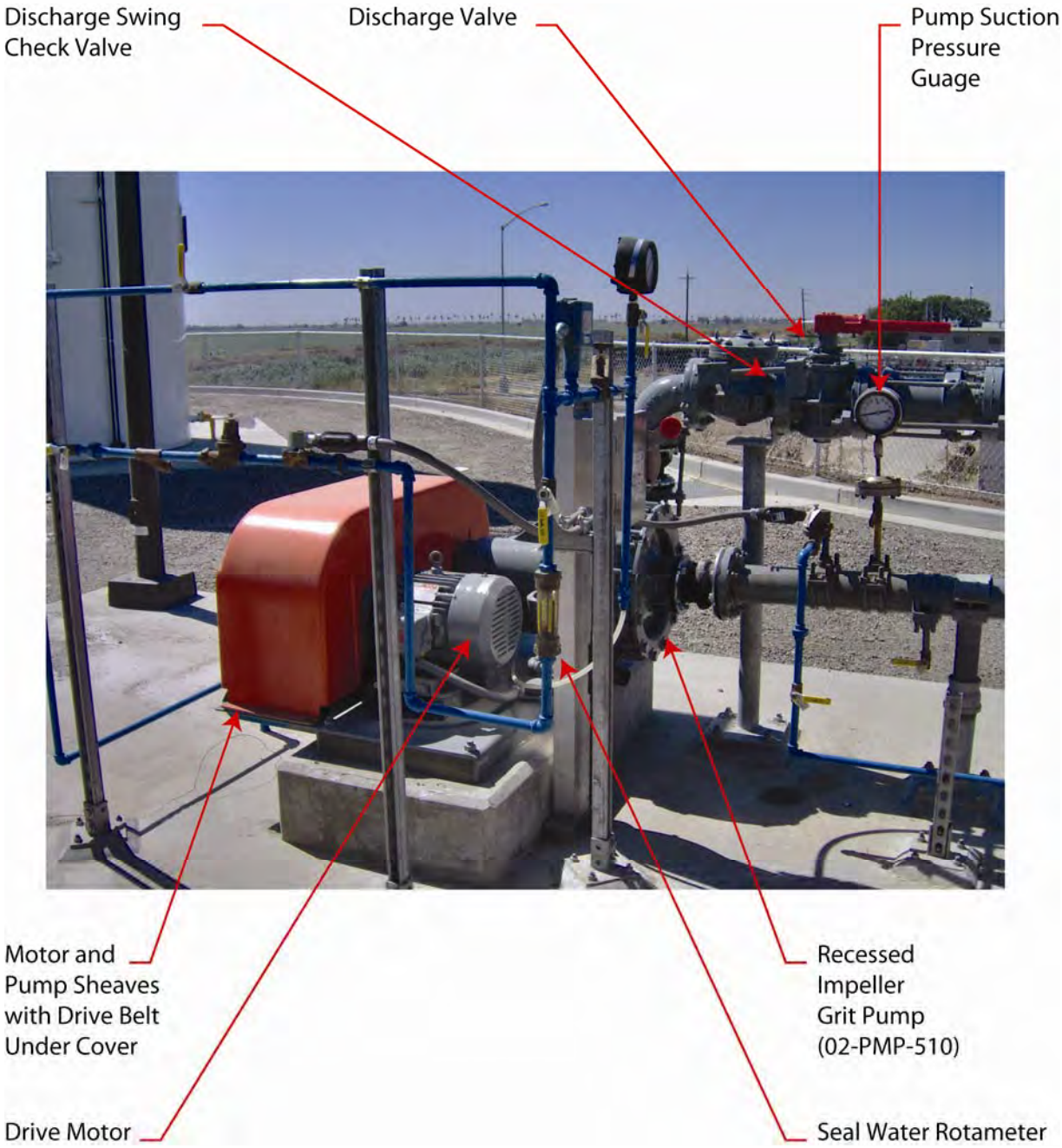

Grit Pump No. 1

PHOTO 3.6

1. With the L-O-R selector switch at MCC-P3 in the **LOCAL** position, the grit pump is controlled manually by the operator using the **START/STOP** pushbuttons.
2. With the L-O-R selector switch at MCC-P3 in the **OFF** position, the grit pump is prohibited from running.
3. With the L-O-R selector switch at MCC-P3 in the **REMOTE** position, the grit pump is controlled through the PLC:
    a. With the AUTO/MANUAL pushbutton at the Grit Removal HMI pop-up window in **MANUAL** mode, the selected grit pump is controlled manually by the operator using the **START/STOP** pushbuttons.
    b. With the AUTO/MANUAL pushbutton at the Grit Removal HMI pop-up window in **AUTO** mode, the selected grit pump is controlled by the PLC.

Normal operation for the grit pump is REMOTE-AUTO control mode. In REMOTE-AUTO control mode, the duty grit pump shall be controlled by a programmable cycle timer. The duty pump may run continuously or run for an adjustable duty pump ON time setpoint (0 to 60 minutes) and then stop for an adjustable duty pump OFF time setpoint (0 to 60 minutes). The grit pump control window displays the status of the two grit pumps and allows sequence selection of the pump to operate during a pumping cycle (i.e., duty/standby).

3.4.5.3.2 *Seal Water System*

Each grit slurry pump has a single split mechanical seal to prevent leakage of the pumped liquid from around the pump shaft. The seal water pressure should be higher than the pump discharge pressure (two to five pounds per square inch (psi) greater than max pump discharge pressure) and there needs to be positive indication of clean water flow into the seal. The mechanical seals will be damaged if not lubricated by pressurized water during pump operation. Single mechanical seals should not leak any water. Leakage is a sign that the seal is wearing out. Each mechanical seal has a vent valve to remove entrapped air from the seal cavity to ensure proper lubrication and flushing of the seal mechanism.

Water from the 3W system is supplied to each pump mechanical seal to lubricate, cool, and flush the seal assembly. Each pump's seal water system consists of:

1. An eccentric plug valve or ball valve to provide a means of isolation of each individual system for maintenance.
2. A pressure regulator to reduce and maintain the utility water pressure to the seal assembly.
3. A solenoid valve to open when the pump motor starter is energized and to close when the starter is de-energized.

3.4.5.3.3 *Scour Water Valve*

3W is supplied to Grit Pump Nos. 1 and 2 (02-PMP-510 and 02-PMP-520) suction pipe via two-inch Scour Water Solenoid Valve Nos. 1 and 2 (02-SV-410 and 02-SV-420) to help prevent blockage at the pump. The scour water solenoid valve opens for an adjustable time period before the girt pump starts.

3.4.5.3.3. Scour Water Valve Controls

The water scour solenoid valves (02-SV-410 and 02-SV-420) can be controlled by the PLC, through the SCADA system, or locally using OPEN-STOP-CLOSE and L-O-R selector switches at the valve actuator.

1. With the L-O-R selector at the scour valve in the **LOCAL** position, the valve is controlled manually by the operator using the **OPEN/STOP/CLOSE** selector.
2. With the L-O-R selector at the scour valve in the **OFF** position, the valve prohibited from operating.
3. With the L-O-R selector at the scour valve in the **REMOTE** position, the valve is controlled through the PLC.
    a. With the AUTO/MANUAL pushbutton at the Grit Removal HMI pop-up window in **MANUAL** mode, the selected scour valve is controlled manually by the operator using the **OPEN**/**CLOSE** pushbuttons.
    b. With the AUTO/MANUAL pushbutton at the Grit Removal HMI pop-up window in **AUTO** mode, the selected scour valve is controlled by the PLC.

Normal operation for the scour valve is REMOTE-AUTO control mode. In REMOTE-AUTO control mode, the valve opens when the grit pump is called for operation. Each grit pump (02-PMP-510 and 02-PMP-520) is interlocked with the water scour solenoid valve (02-SV-410 and 02-SV-420), respectively. Thus, when the solenoid valve opens, the grit pump is initiated to start. If the solenoid valve is closed, the grit pump will not operate.

3.4.5.4 Grit Cyclone Separator and Classifier

The accumulated grit slurry is pumped to the grit cyclone separator/classifier (02-CLA-500); refer to Figures 3.1 and 3.2. The separator does not have electrical connections. The cyclone separator utilizes centrifugal forces to separate the organic and inorganic portions of grit. The separated grit drops out of the cyclone separator into a grit classifier where it is washed and cleaned. The cleaned grit is conveyed from the classifier to a dumpster. A photo of the Grit Classifier and Cyclone Separator is included in Photo 3.7.

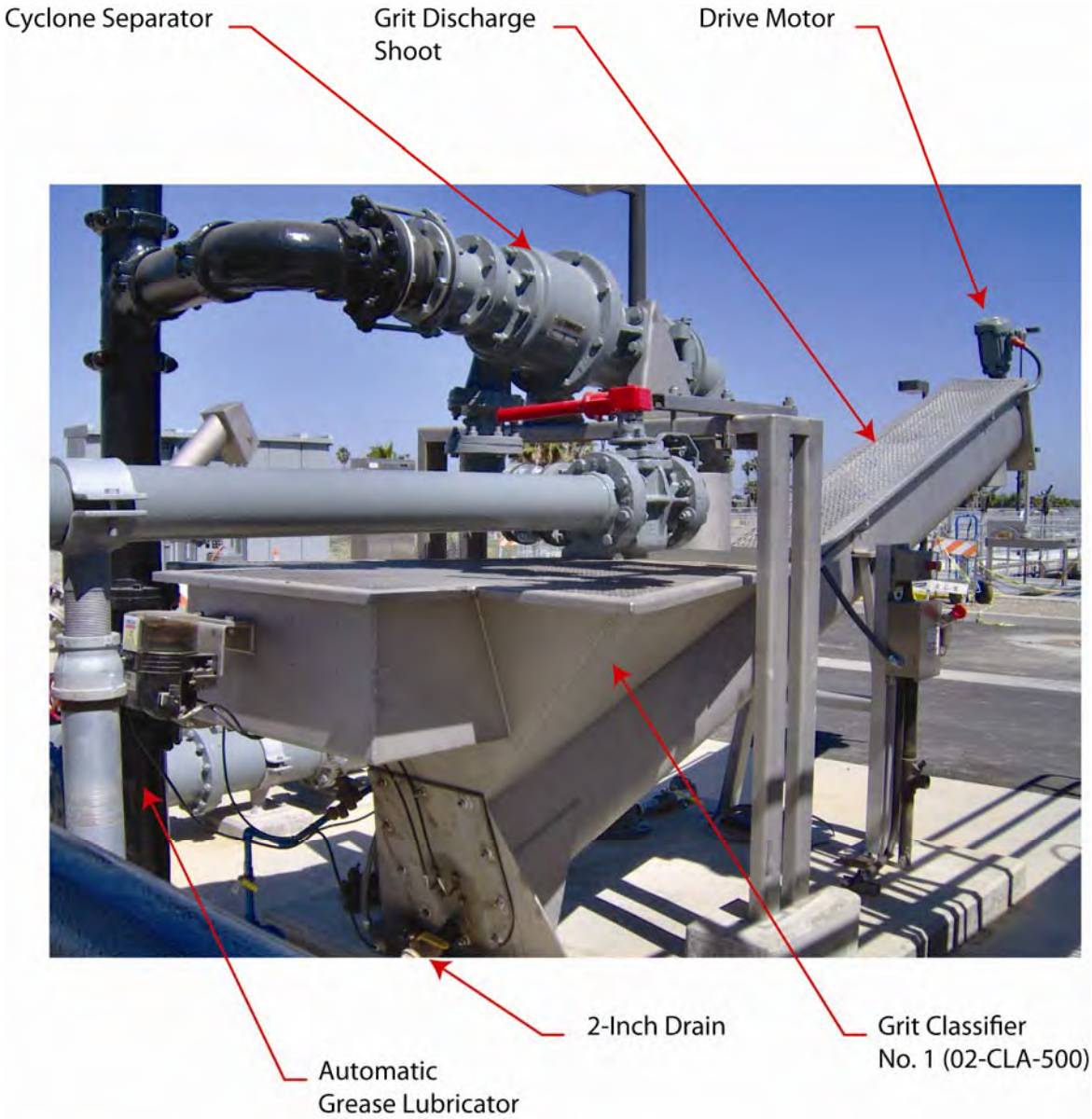

Grit Classifier and Cyclone Separator

PHOTO 3.7

California Department of Corrections
and Rehabilitation
Deuel Vocational Institution Wastewater Treatment Plant
Operations and Maintenance Manual

carollo
Engineers...Working Wonders With Water®

H:\Client\CDC SAC\6927\6927R11 - DVI - DD and CD Phase\O&M Manual\O&MManualPhotos\WordFiles\PhotoNo3.7.doc

3.4.5.4.1 *Grit Cyclone Separator and Classifier Controls*

The grit classifiers (02-CLA-500) can be controlled by the PLC, through the SCADA system, or locally using START/STOP pushbuttons and the L-O-R selector switch at MCC-P3, which is located in the headworks electrical building. The operational status and alarms of each grit separator/classifier is displayed at the SCADA system.

1. With the L-O-R selector switch at MCC-P3 in the **LOCAL** position, the cyclone separator and classifier is controlled manually by the operator using the **START/STOP** pushbuttons.
2. With the L-O-R selector switch at MCC-P3 in the **OFF** position, the cyclone separator and classifier is prohibited from running.
3. With the L-O-R selector switch at MCC-P3 in the **REMOTE** position, the cyclone separator and classifier is controlled through the PLC:
    a. With the AUTO/MANUAL pushbutton at the Grit Removal HMI pop-up window in **MANUAL** mode, the cyclone separator and classifier is controlled manually by the operator using the **START/STOP** pushbuttons.
    b. With the AUTO/MANUAL pushbutton at the Grit Removal HMI pop-up window in **AUTO** mode, cyclone separator and classifier is controlled by the PLC.

Normal operation for the grit classifier is REMOTE-AUTO control. In REMOTE-AUTO, the cyclone separator and classifier shall start when the duty grit pump starts. The grit classifier shall run for an operator adjustable time period (1 to 300 minutes) after the duty grit pump stops. If the water level in the classifier is high, a HIGH WATER LEVEL alarm will shut down the girt pump and send an alarm to the SCADA system.

3.4.6 Fine Screening

After the vortex grit system, the wastewater is fed into one of two rotary drum screens (02-DS-310 and 02-DS-320). The rotary drum screens remove fine material (e.g., hair) not captured by the mechanical climber screen, which could potentially blind the membranes. The rotary drum screens are located above grade and east of the influent structure. Each screen is sized to handle 2.5 mgd. The second screen is provided for standby purposes.

3.4.6.1 <u>Rotary Drum Screens</u>

The drum screen consists of a rotating perforated drum screen with internally mounted baffles, which transport the separated solids out of the drum. The drum rotates on wheels and is operated by a cog gear motor. A distribution box located inside the drum screen distributes the influent flow over a large area inside the drum. The influent passes through the screen perforations. Solids larger than 2 mm are captured and discharged through a chute to the screening hopper, which feeds the screenings washer/compactor (please refer to the screenings washer/compactor controls). Photo 3.8 shows Drum Screen No. 2 and the Screenings Compactor.

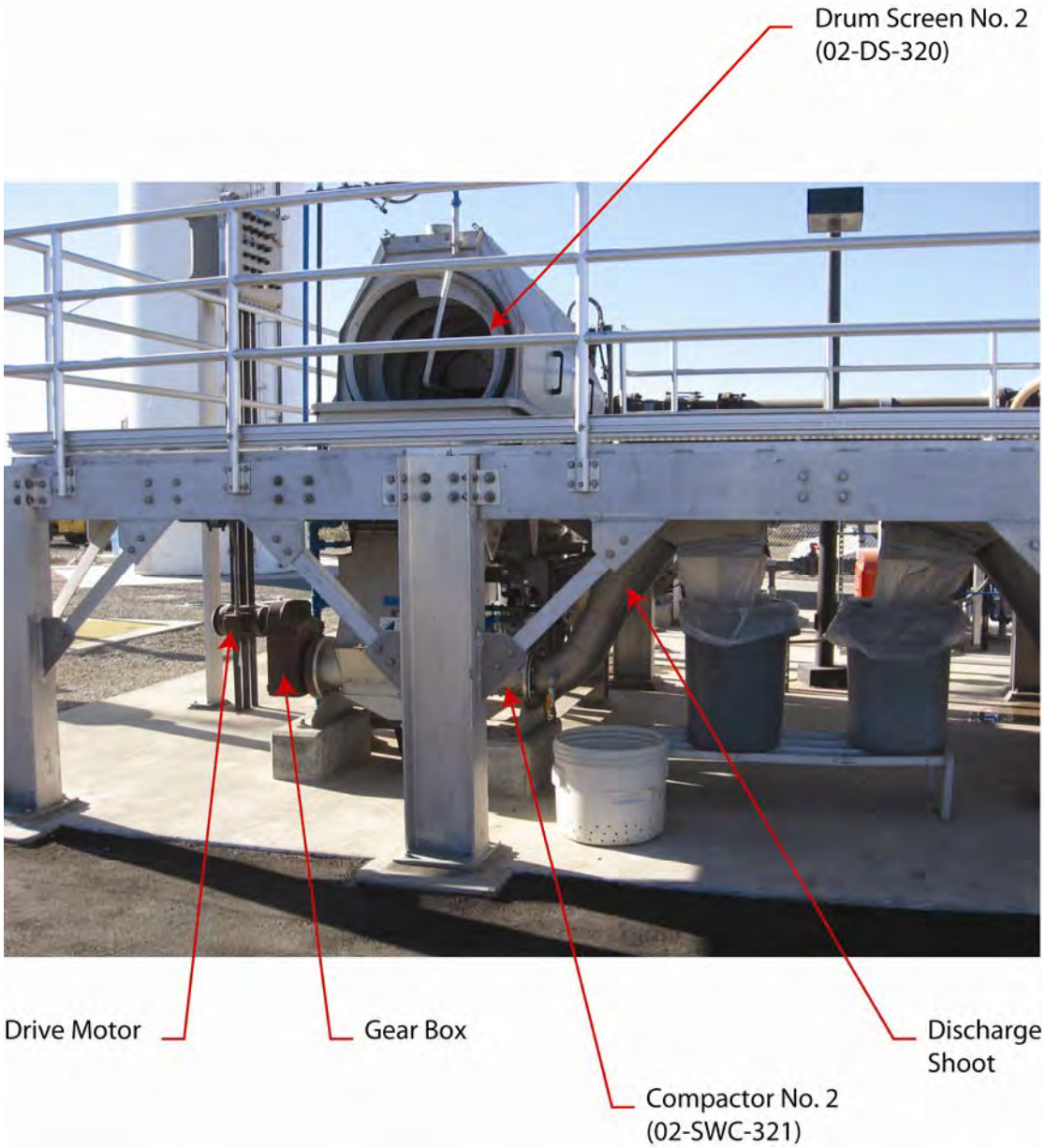

Drum Screen No. 2 and Screenings Compactor

PHOTO 3.8

California Department of Corrections
and Rehabilitation
Deuel Vocational Institution Wastewater Treatment Plant
Operations and Maintenance Manual

carollo
Engineers...Working Wonders With Water®

Optional rescreening of mixed liquor (ML) is possible by closing the valve between the two drum screens (02-VAL-322) and opening the six-inch valve near the east most drum screen (02-DS-320); refer to Figure 3.1. This will allow any screenings or accumulation of material in the aeration tanks to be removed. This can only take place utilizing the east most drum screen (02-DS-320) since the west most drum screen (02-DS-310) must be utilized to treat the incoming wastewater.

3.4.6.1.1 *Rotary Drum Screen Controls*

Each rotary drum screen (02-DS-310 and 02-DS-320) has an L-O-R selector switch, START/STOP pushbuttons, and EMERGENCY STOP pushbutton located on the VCP that immediately stops both the operating screen and the screen washer/compactor. Activation of the pushbutton will generate an alarm at the OIS. In both HAND and AUTO position, the rotary drum screens are interlocked with the downstream screenings washer/compactor (02-WC-311 and 02-WC-321). Thus, when the drum screen is activated to start operating, the downstream washer/compactor will start and continue to run for an adjustable period after the screen has stopped. If the downstream washer/compactor fails to start after a preset time (adjustable zero to two minutes), the drum screen will be shutdown. A photo of the Drum Screen No. 2 and Screenings Compactor Local Control Panel is shown in Photo 3.9.

1. With the L-O-R selector switch at the VCP in the **LOCAL** position, the rotary drum screen is controlled manually by the operator using the **START/STOP** pushbuttons.
2. With the L-O-R selector switch at the VCP in the **OFF** position, the rotary drum screen is prohibited from operating.
3. With the L-O-R selector switch at the VCP in the **REMOTE** position, the rotary drum screen is controlled by the rotary drum screen PLC.
    a. With the AUTO/MANUAL pushbutton at the Drum Screen HMI pop-up window in **MANUAL** mode, the rotary drum screen is controlled manually by the operator using the **START**/**STOP** pushbuttons.
    b. With the AUTO/MANUAL pushbutton at the Drum Screen HMI pop-up window in **AUTO** mode, rotary drum screen is controlled by the PLC.

Normal operation for the rotary drum screen is REMOTE-AUTO control mode. In REMOTE-AUTO control mode, the rotary drum screen starts when any of the influent pumps are running. When all of the influent pumps are stopped, the screen continues to run for an operator adjustable period of time (zero to five minutes) and then stop.

3.4.6.2 <u>Rotary Drum Screen Spray Water</u>

To prevent the screenings from blinding the perforated drum screen, each drum is equipped with two high-pressure spray nozzles (inside and outside spray). The nozzles are fed by 3W by use of solenoid valves. The spray duration is operator adjustable.

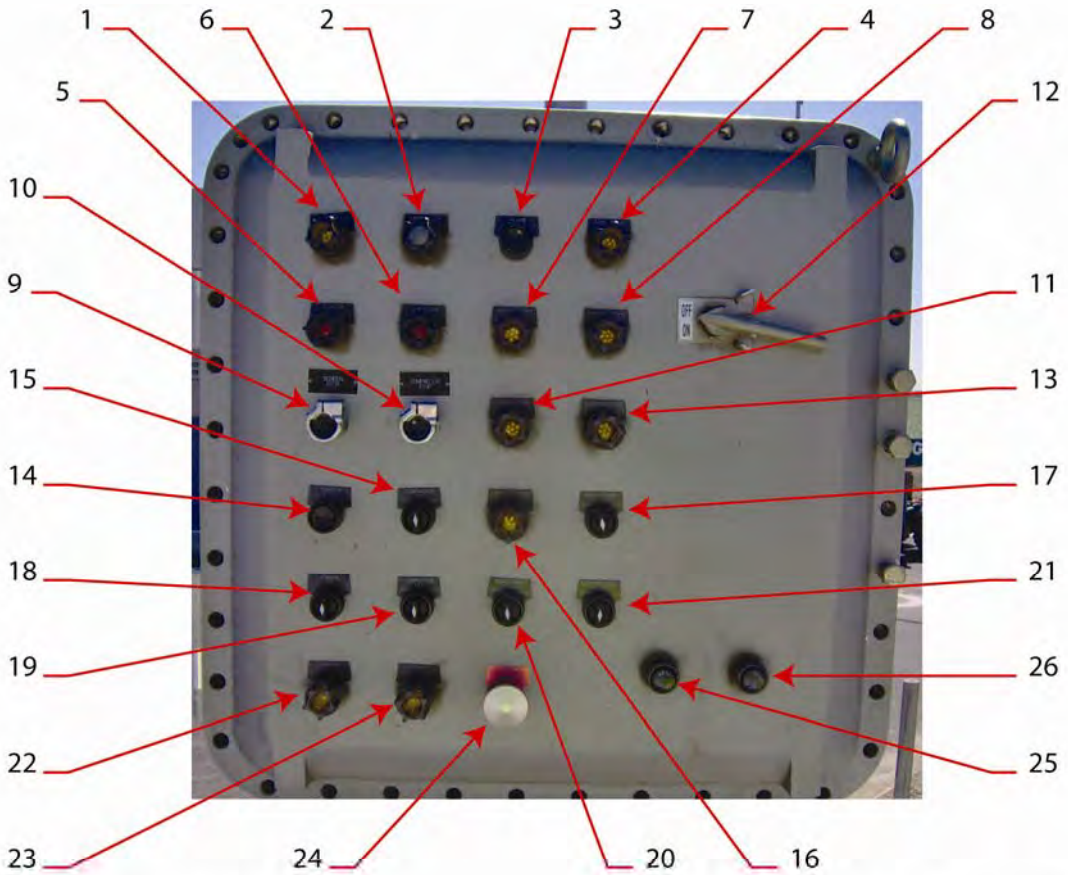

1 - Screen in Remote Light
2 - Power On Light
3 - Alarm Reset Pushbutton
4 - Compactor Zone Spray Low Flow Alarm Light
5 - Screen Running Light
6 - Compactor Running Light
7 - Screen Inside Spray Low Flow
8 - Screen Outside Spray Low Flow
9 - Screen Stop Pushbutton (Lockable)
10 - Compactor Stop Pushbutton (Lockable)
11 - Compactor Fail Alarm Light
12 - Control Panel Disconnect Switch
13 - Compactor High Temperature Alarm Light
14 - Screen Start Pushbutton
15 - Compactor
16 - Screen Zero Speed Alarm Light
17 - Screen Inside Spray Open-Closed-Auto Selector Switch
18 - Screen Local-Off-Remote Selector Switch
19 - Compactor Hand-Off-Auto Selector Switch
20 - Compactor Zone Spray Open-Closed-Auto Selector Switch
21 - Screen Outside Spray Open-Closed-Auto Selector Switch
22 - Screen Fail Alarm Light
23 - Screen High Temperature Alarm Light
24 - Emergency Stop Pushbutton
25 - Screen Emergency Stop Pushbutton
26 - Compactor Emergency Stop Pushbutton

Drum Screen No. 2 and Screenings Compactor Local Control Panel

PHOTO 3.9

3.4.6.2.1 *Spray Water Controls*

Located on the rotary drum screen VCP is an inside spray and outside spray water solenoid OPEN-CLOSE-AUTO (O-C-A) selector switches; refer to Photo 3.9.

1. With either O-C-A selector switch at the VCP in the **OPEN** position, the appropriate solenoid valve is opened.
2. With either O-C-A selector switch at the VCP in the **CLOSE** position, the appropriate solenoid valve is closed.
3. With either O-C-A selector switch at the VCP in the **AUTO** position, the appropriate solenoid valve is controlled through the rotary drum screen PLC.
    a. With the AUTO/MANUAL pushbutton at the Drum Screen HMI pop-up window in **MANUAL** mode, the inside and outside spray water valves are controlled manually by the operator using the **OPEN**/**CLOSE** pushbuttons.
    b. With the AUTO/MANUAL pushbutton at the Drum Screen HMI pop-up window in **AUTO** mode, the inside and outside spray water valves are controlled by the PLC.

Normal operation for the spray water valve is AUTO-AUTO control mode. In AUTO-AUTO control mode, the spray water solenoid is controlled through the SCADA system; the operator has the option to select an operating mode (1) CONTINUOUS or (2) INTERMITTANT. In CONTINUOUS mode, the spray water solenoid valve will open when the drum screen starts operation and close when the drum screen stops. In INTERMITTANT mode, the spray water solenoid valve will open for an operator adjustable time (0 to 60 seconds), and then close for an operator adjustable rotary screen elapsed run time (0 to 12 hours).

3.4.6.3 <u>Screenings Washer/Compactor</u>

The screenings washer/compactors (02-SWC-311 and 02-SWC-321) are designed to remove water and compact fine screened materials discharged from the drum screens; refer to Figure 3.1. The screenings are discharged from the drum screens into separate hoppers on the washer/compactor. A screw moves the rinsed screenings into the compaction zone where the excess water is forced from the screenings; thus, reducing the volume of material required for disposal. The removed water containing organics drains via the plant drain system to the influent wet well and is treated with the rest of the wastewater flow. The dewatered screenings are discharged into a dumpster for proper disposal at a refuge site; refer to Photo 3.8.

3.4.6.3.1 *Washer/Compactor Controls*

Each screenings washer/compactor (02-SWC-311 and 02-SWC-321) has an H-O-A selector switch, START/STOP pushbuttons, and EMERGENCY STOP pushbutton located on the VCP that immediately stops both the operating screen and the screen

washer/compactor; refer to Photo 3.9. Activation of the pushbutton will generate an alarm at the HMI.

1. With the H-O-A selector switch at the VCP in the **LOCAL** position, the fine screen washer/compactor is controlled manually by the operator using the **START/STOP** pushbuttons.
2. With the H-O-A selector switch at the VCP in the **OFF** position, the fine screen washer/compactor is prohibited from operating.
3. With the H-O-A selector switch at the VCP in the **REMOTE** position, the fine screen washer/compactor is controlled by the rotary drum screen PLC.
    a. With the AUTO/MANUAL pushbutton at the Drum Screen HMI pop-up window in **MANUAL** mode, the fine screen washer/compactor is controlled manually by the operator using the **START**/**STOP** pushbuttons.
    b. With the AUTO/MANUAL pushbutton at the Drum Screen HMI pop-up window in **AUTO** mode, the fine screen washer/compactor is controlled by the PLC.

Normal operation for the fine screen washer/compactor is AUTO-AUTO control mode. In REMOTE-AUTO control mode, the fine screen washer/compactors (02-SWC-311 and 02-SWC-321) controls are interlocked with the controls of drum screens (02-DS-310 and 02-DS-320), respectively. Thus, when the drum screens are activated to start operating, the fine screen washer/compactors will start operating and continue to run for an adjustable period after the screens have stopped. If the washer/compactors fail to start after a preset time (adjustable zero to two minutes), the fine screens will be shutdown.

3.4.6.4 Washer/Compactor Zone Spray Water

The zone spray adds 3W to wash down the screened materials, which resuspends organic material by rinsing the organics out of the screening material. The spray duration is operator adjustable.

3.4.6.4.1 *Washer/Compactor Zone Spray Water Controls*

Located on the rotary drum screen/washer compactor VCP is zone spray water solenoid O-C-A selector switch; refer to Photo 3.9.

1. With the zone spray O-C-A selector switch at the VCP in the **OPEN** position, the zone spray solenoid valve is opened.
2. With the zone spray O-C-A selector switch at the VCP in the **CLOSE** position, the zone spray solenoid valve is closed.
3. With the zone spray O-C-A selector switch at the VCP in the **AUTO** position, the zone spray solenoid valve is controlled through the rotary drum screen PLC.
    a. With the AUTO/MANUAL pushbutton at the Drum Screen HMI pop-up window in **MANUAL** mode, the selected spray water valve is controlled manually by the operator using the **OPEN**/**CLOSE** pushbuttons.

b. With the AUTO/MANUAL pushbutton at the Drum Screen HMI pop-up window in **AUTO** mode, the selected spray water valve is controlled by the PLC.

Normal operation for the spray water valve is AUTO-AUTO control mode. In AUTO-AUTO control mode, the spray water solenoid is controlled through the SCADA system; the operator has the option to select an operating mode (1) CONTINUOUS or (2) INTERMITTANT. In CONTINUOUS mode, the spray water solenoid valve will open when the drum screen starts operation and close when the drum screen stops. In INTERMITTANT mode, the spray water solenoid valve will open for an operator adjustable time (0 to 60 seconds), and then close for an operator adjustable rotary screen elapsed run time (0 to12 hours).

3.5 NORMAL OPERATION PROCEDURES

This section describes operation of the headworks after the system has been started and is ready for normal operation. Startup/Shutdown procedures are outlined in a preceding chapter of this manual. In addition to the information presented, the equipment manufacturer's operations and maintenance (O&M) manual should be consulted for normal operating procedures and maintenance schedules.

3.5.1 Influent Channel

1. Check operation of the influent sampler and verify the unit is drawing samples as programmed.
2. Clean sample chamber weekly.

3.5.2 Bar Screens

1. Check the operating status of the mechanical climber screen at the OIS. Check to make sure there are no active alarms.
2. Every three to six hours, verify proper operation of the climber screen.
3. Check for smooth rotation of the climber screen.
4. Observe the operation of the climber screen making sure that the screenings are adequately removed; if required, adjust frequency/duration timer setpoints accordingly.
5. If manual bar screen is in service, check it once every three to four hours for screening accumulations. Remove accumulations as necessary.
6. Wash down screenings area.
7. Wash down mechanical climber screen weekly.
8. Lubricate mechanical climber screen according to the manufacturer's technical O&M manual.

3.5.3 Screenings Washer/Compactor

1. Check for proper operation of the screenings washer/compactor at the OIS. Check to make sure there are no active alarms.
2. Check the level in the screenings disposal bins. Verify the disposal bins do not overfill to a point where waste disposal trucks cannot lift the bins.
3. Weekly, wash down the compactors.

3.5.4 Influent Wet Well

1. Check the operating status of the influent pumps at the OIS. Check to make sure there are no active alarms.
2. Every three hours, verify proper operation of influent pumps.
3. Check the influent pumps for excessive vibration and noise.
4. Weekly, change the pump sequence selection to balance run times on individual pumps.
5. Weekly, wash down the influent wet well.

3.5.5 Grit Removal System

1. Check the operating status of the grit chamber, grit pumps, grit cyclone separator, and grit classifier at the OIS. Check to make sure there are no active alarms.
2. Verify the proper operation of the grit chamber, grit pumps, grit cyclone separator, and grit classifier.
3. Check the operation of the grit solenoid valve to ensure that when the valve opens, flow is pumped to the grit classifier.
4. Check the grit pumps for excessive vibration, noise, pressure, overheating, and lubrication leakage.
5. Check the grit pumps discharge pressure. Note that impellers and volutes on grit pumps tend to wear faster than other pumps due to the abrasive nature of the fluid. Pump discharge capacity, and thus, system operating pressure will diminish with wear.
6. Clean or clear grit system equipment as necessary.
7. Check the level in the grit disposal bin. Verify the disposal bins do not overfill to a point where waste disposal trucks cannot lift the bin.
8. Weekly, switch the grit pump sequence to equalize run times.
9. Weekly, check for grit accumulation in the grit classifier. The unit should have less than 18 inches of grit in the bottom. (IMPORTANT: Make sure drive motor has stopped before probing classifier).

10. Lubricate grit removal equipment according to the manufacturer's technical O&M manual.
11. Weekly, check grit pump bearing housing oil level. If the oil level is low, fill to the appropriate level. The housing oil should be changed annually or as recommended by the manufacturer.
12. Monthly, check gear motor oil level.
13. Semi-annually, check the grit pump and classifier sheave belt tension, adjust tension as necessary.
14. Annually, check the grit classifier lower bearing seals; if necessary, replace the bearing seals.
15. Annually, check grit classifier lower bearing oil; if necessary, change or fill bearing oil.

3.5.6 Rotary Drum Screens

1. Check the operating status of the rotary drum screens at the OIS. Check to make sure there are no active alarms.
2. Every three to six hours, verify proper operation of the rotary drum screen.
3. Check to insure screenings are not accumulating in the discharge chute.
4. Clean or clear equipment as necessary.
5. Weekly, wash down the screenings area.
6. Lubricate equipment according to the manufacturer's technical O&M manual.
7. Monthly, open the screen enclosure panels and inspect equipment for proper operation.

3.5.7 Headworks Ventilation System

1. Check for proper operation of exhaust fan and combustible gas monitor.
2. Check to make sure no warning alarms are displayed on the SCADA system.
3. Check fan parts for wear of corrosion and check V-belt for proper alignment and tension.
4. Lubricate fan bearings according to the manufacturer's technical O&M manual.

3.6 EMERGENCY OPERATION PROCEDURES

This section describes the operation of the headworks facility under emergency circumstances. Scenarios for different emergency conditions are given, followed by suggested corrective actions to be taken.

3.6.1 Power Outage

1. In the event of a power outage, after an adjustable time delay, the emergency generator will start. The mechanical climber screen, influent pumps, rotary drum screens, odor control systems, and grit removal processes will re-start if placed in remote-automatic control. Once restarted, the equipment will resume operation at previous setpoints. Verify equipment has started properly.
2. After utility power has been restored and the plant is switched from standby to utility power, the equipment will once again restart if in remote-automatic mode. Verify equipment has started properly.
3. Equipment in local or remote-manual mode will require manual restart.

3.6.2 Equipment Malfunctions

1. Motors or pumps with excessive vibration, unusual noise, overheating, or lubrication leakage should be shutdown. The unit should not be operated until the reason for these unusual observations has been corrected.
2. Motors that shutdown due to current imbalance or overcurrent should be taken out of service immediately. Either of these types of failures indicates serious problems that should be investigated by an electrician prior to restarting the equipment. Shutdowns of this nature are common during electrical problems and a single attempt to restart is justified in this situation.
3. Pumps with excessive packing or seal leakage can be operated as long as the leaking water does not travel close to electrical or instrumentation equipment. Correct the leakage as soon as time permits.

3.6.3 Mechanical Climber Screen Obstruction

1. If alarm sounds, acknowledge and reset.
2. Stop and lockout the equipment and see if the obstruction can be cleared manually with a heavy-duty garden rake. Test for the proper operation of the climber screen.
3. If the climber screen cannot operate properly, take the screen and channel out of service and utilize the manual bar screen. Dewater the channel, inspect the inoperative equipment, and make the necessary repairs.

3.6.4 Screenings Washer/Compactor Failure

1. If alarm sounds, acknowledge and reset.
2. Stop and lockout the washer/compactor.
3. Clear blockage in the washer/compactor.
4. Select manual control and operate in reverse direction to assure obstruction removal.
5. Return washer/compactor automatic control.

3.6.5 Influent Pump Failure

1. If alarm sounds, acknowledge and reset.
2. Attempt to reset pump once.
3. If pump fails to start or trips out, stop and lockout the grit pump. Isolate the pump by closing the discharge valve.
4. Place the standby influent pump in service.
5. Make necessary repairs to the inoperative pump and return to service.

3.6.6 Grit Pump Failure

1. If alarm sounds, acknowledge and reset.
2. Attempt to reset pump once.
3. If pump fails to start or trips out, stop and lockout the grit pump. Isolate the pump by closing the suction and discharge valves. Keep grit chamber in service.
4. Place the standby grit pump in service.
5. Make necessary repairs to the inoperative grit pump and return to service.

3.6.7 Grit Classifier Failure

1. Shutdown failed grit classifier.
2. Stop and lockout grit pump. Isolate the pump by closing the suction and discharge valves.
3. Place the standby grit pump in service.
4. Inspect classifier and repair. Return grit pump and classifier to service as soon as possible.

3.7 STARTUP/SHUTDOWN PROCEDURES

The following is a brief description of the headworks process startup and shutdown procedures. Refer to the equipment O&M manuals for specific information regarding lubrication and specific equipment checks.

3.7.1 Headworks

Communications check. Notify all involved personnel that Course Screening System is being put into service.

3.7.1.1 <u>Pre-Startup and Safety Check</u>

3.7.1.1.1 *Mechanical Climber Screen*

1. Verify the climber screen is available for service.

2. Verify all equipment is off and locked out.
3. Lubricate equipment as specified in the manufacturer's O&M manual.
4. Check alarm systems. Test at the OIS and VCP.
5. Check climber screen and screen channel is clear of debris and personnel.
6. Check that all anchor bolts and fastening devices are secure.
7. Verify all drive assembly components and guards are in place, properly aligned, and tensioned.
8. When any wires relative to the drive motor or power supply have been disconnected, disconnect drive assemblies and check for proper rotation. After checking rotation, reconnect drive.

3.7.1.1.2 *Screenings Washer Compactor*

1. Verify the screenings washer/compactor is available for service.
2. Verify all equipment is off and locked out.
3. Lubricate equipment as specified in the manufacturer's O&M manual.
4. Check alarm systems. Test at the OIS and VCP.
5. Verify screenings disposal bin is empty and no foreign materials are present. Make sure the unit is in place and secure so it will not move prior to filling.
6. Verify all drive assembly components and guards are in place, properly aligned, and tensioned.

3.7.1.2 <u>Startup Procedures</u>

3.7.1.2.1 *Ultrasonic Level Indicator*

1. Turn the circuit breaker at Panelboard LC for Ultrasonic Level Transmitter "**ON**."
2. Check ultrasonic level indicating system to verify all system components are working properly.
3. Set ultrasonic level switch that initiates the alternate screen operations (differential level across the climber screen and climber screen channel high level).
4. Set differential level setpoint at the VCP.

3.7.1.2.2 *Screenings/Washer Compactor*

1. Communication check. Notify all personnel involved that the screenings washer/compactor is going to be in operation and is ready to receive flow.
2. From the Screenings/Washer Compactor VCP (02-VCP-111) located next to the unit, select/position the following:
   a. Position the local Disconnect switch to "**ON**."

b. Switch the Screen H-O-A selector switch to **AUTO**.

3. Check alarm system to ensure there are no active alarms.

3.7.1.2.3 *Mechanical Climber Screen*

1. Communications check. Notify all personnel involved that the mechanical climber screen and screenings washer/compactor are going to be in operation and are ready to receive flow.

2. From the Mechanical Climber Screen VCP (02-VCP-110) located next to the unit, select/position the following:

   a. Position the local Disconnect switch to "**ON**."

   b. Switch the Screen H-O-A selector switch to **AUTO**.

3. Check alarm system to ensure there are no active alarms.

4. Open the slide gates GAT-110 and GAT-111 in the channel containing the mechanical climber screen (i.e., northern channel). Close the slide gates GAT-120 and GAT-121 in the channel containing the manual bar screen (i.e., southern channel). This will allow influent flow to pass through one channel while isolating the second channel.

3.7.1.3 <u>Shutdown</u>

3.7.1.3.1 *Mechanical Climber Screen*

1. Communications check. Notify all personnel that the mechanical climber screen is being shutdown.

2. Make provisions to route flow through the manual bar screen. Open the slide gates GAT-120 and GAT-121 to the southern channel, allowing influent flow to pass through the manual bar screen. Close the isolation slide gates GAT-110 and GAT-111 to the northern channel containing the mechanical climber screen.

3. From the Mechanical Climber Screen VCP (02-VCP-110) located next to the unit, select/position the following:

   a. Switch the climber screen H-O-A selector switch to **HAND** and operate climber screen manually in the **FORWARD** direction for 15 minutes while hosing to clear debris.

4. If there is a reason why the climber screen should not be operated, padlock its local Disconnect in the "**OFF**" position and attach a signed and dated "**DO NOT OPERATE**" tag indicating the problem.

3.7.1.3.2 *Screening Washer Compactor*

1. Communications check. Notify all personnel that the screenings washer/compactor is being shutdown.

2. From the Screenings/Washer Compactor VCP (02-VCP-111) located next to the unit, select/position the following:
   a. Switch the screenings washer/compactor H-O-A selector switch to **HAND** to operate manually and wash down.
3. If there is a reason why the screenings washer/compactor should not be operated, padlock its local Disconnect in the "**OFF**" position and attach a signed and dated "**DO NOT OPERATE**" tag indicating the problem.
4. If mechanical climber screen is operating, the screenings washer/compactor can only be shutdown for ten minutes.

3.7.1.3.3 *Ultrasonic Level Transmitter*

3.7.2 Influent Pumps

Communications check. Notify all involved personnel that the Influent Pump Station is being put into service.

3.7.2.1 Pre-Startup and Safety Check

1. Verify the influent pumps are available for service.
2. Verify all equipment is off and locked out.
3. Check alarm systems. Test at the OIS and MCC.
4. Verify influent wet well is free of debris, equipment, and personnel.
5. When any wires relative to the power supply have been disconnected, disconnect drive assemblies and check for proper rotation. After checking rotation, reconnect drive.
6. Verify breakers to all pumps are closed.
7. Verify the water level in the wet well is sufficient for pump operation.
8. Check ultrasonic level detectors for wet well pump control.

3.7.2.2 Startup Procedures

1. Communications check. Notify all personnel involved that the influent pumps are going to be in operation and are ready to receive flow.
2. Verify the slide gates of either screen channel (i.e., northern or southern channel) are open to allow wastewater to enter the influent wet well.
3. Verify the wastewater level in the influent wet well is sufficient for pump operation.
4. Select lead, lag, and standby pumps.
5. Open discharge valves on all operating pump(s).

6. Turn on power to all operating pump(s) at MCC-P3. Check to make sure the circuit breakers at the MCC-P3 are reset.
7. Set the L-O-R selector switch at MCC-P3 to REMOTE. The PLC will control the pumps such that a constant wet well level is maintained.
8. Observe the operating influent pumps and check: the pumps are delivering wastewater; and the pumps are not vibrating.
9. Check the operation of the ultrasonic level detectors.
10. Check the motor and alarm system to ensure there are no active alarms.

3.7.2.3 Shutdown Procedures

1. Communications check. Notify all personnel that the influent pumps are being shutdown.
2. Stop and lockout applicable pumps.
3. Turn off power to the pump(s) at the MCC-P3.
4. Close plug valves downstream of pump(s).
5. Adjust speed of remaining pumps as necessary to achieve desired pumping rate.
6. If shutdown is for entire influent wet well, pump wet well down and wash down pumps and wet well with 3W. This will require provision for bypass pumping or be done in the middle of the night when flows are lowest.
7. If there is a reason why the influent should not be operated, padlock its breaker at MCC-P3 in the "**OFF**" position and attach a signed and dated "**DO NOT OPERATE**" tag indicating the problem.

3.7.3 Headworks Ventilation System

Communications check. Notify all involved personnel that the Headworks Ventilation System is being put into service.

3.7.3.1 Pre-Startup and Safety check

1. Verify the exhaust and/or supply fan is available for service.
2. Lubricate equipment as specified in the manufacturer's O&M manual.
3. Check that all anchor bolts and fastening devices are secure.
4. Verify all drive assembly components and guards are in place, properly aligned, and tensioned.

3.7.3.2 Startup Procedures

1. Communications check. Notify all personnel involved that the exhaust and/or supply fan is going to be in operation.

2. Verify power is on to the equipment at LP-P3.
3. Depress the start pushbutton on LP-P3. Fan will start.
4. Check for proper fan rotation and operation.

3.7.3.3 Shutdown Procedures

1. Communication check. Notify all personnel that the exhaust and/or supply fan is being shutdown.
2. Stop operation of the exhaust and/or supply fan at LP-P3.
3. If there is a reason why the fan should not be operated, padlock its breaker at LP-P3 in the "**OFF**" position and attach a signed and dated "**DO NOT OPERATE**" tag indicating the problem.

3.7.4 Grit Removal

Communications check. Notify all involved personnel that the Grit Removal System is being put into service.

3.7.4.1 Pre-Startup and Safety Check

3.7.4.1.1 *Vortex Grit Tank*

1. Verify the grit removal system is available for service.
2. Verify grit chamber, separator, and classifier are free of debris, tools, or personnel in the chamber.
3. Verify all equipment is off and locked out.
4. Lubricate all equipment as specified in the manufacturer's O&M manual.
5. Check alarm systems. Test at the OIS and VCP.

3.7.4.1.2 *Grit Pumps*

1. Check alignment between the grit pump and motor.
2. Verify all drive assembly components and guards are in place, properly aligned, and tensioned.
3. Check grit pump for proper rotation and impeller clearance.
4. Assure grit pump motor voltage is correct.
5. Verify the grit pump bearings are lubricated.
6. Verify the grit pump is full of liquid.

3.7.4.1.3 *Grit Cyclone/Classifier*

1. Verify the grit cyclone/classifier is available for service.
2. Verify all equipment is off and locked out.

3. Lubricate equipment as specified in the manufacturer's O&M manual.
4. Check alarm systems. Test at the OIS and VCP.
5. Verify grit disposal bin is empty and no foreign materials are present. Make sure the unit is in place and secure so it will not move prior to filling.
6. Verify all drive assembly components and guards are in place, properly aligned, and tensioned.

3.7.4.1.4 *Seal Water System*

1. Check that strainer is clean.
2. Open plug valve in each pump's water seal system.
3. The pressure regulator should be set at or above 33 psi.
4. The solenoid valve will open when the pump's motor starter is energized.
5. Check that pump seal water is flowing.

3.7.4.2 <u>Startup Procedures</u>

3.7.4.2.1 *Vortex Grit Tank*

1. Verify that Grit Tank is available for operation.
2. Verify that the fine screen is ready to receive flow from Grit Tank (Fine Screen Startup and Shutdown Procedures).
3. REMOVE vortex grit basin effluent stop plate (02-GAT-411).
4. REMOVE stop plate (02-GAT-410) allowing wastewater to fill the grit chamber.
5. CLOSE stop plate (02-GAT-414) located on the bypass line for the grit removal system.
6. After the tank is approximately 2/3 full, start the Grit Basin Impeller Mixer as follows:
   a. Position the Impeller local Disconnect switch at 02-VCP-410 (adjacent to the impeller motor) to "**ON**" and switch the L-O-R selector switch to **REMOTE**.
   b. From the Grit Removal HMI pop-up window, click on the Grit Basin Impeller Icon and push **START.**

3.7.4.2.2 *Grit Classifier*

1. Verify that the Grit Classifier is available for operation.
2. In the headworks electrical room, close the grit classifier main breaker and position the L-O-R selector switch to **REMOTE** at MCC-P3.
3. From the Grit Removal HMI pop-up window, click on the Grit Classifier Icon and select/enter the following:
   a. AUTO/MANUAL pushbutton at the pop-up window is in the **AUTO** mode.
   b. Stop Delay Setpoint (approximately five minutes).

4. During operation of the grit pump and classifier, verify the proper operation of the water scour solenoid valve.

5. Check alarm system to ensure there are no active alarms.

3.7.4.2.3 *Grit Pumps*

1. Verify that Grit Pump Nos. 1 and 2 are available for operation.

2. Before starting up, check the following:
   a. The grit pumps are valved correctly.
   b. Check that all the equipment guards are securely assembled in place.

3. In the headworks electrical room, close the grit pump(s) main breaker and position the L-O-R selector switches to **REMOTE** at MCC-P3.

4. From the Grit Removal HMI pop-up window, click on each Grit Pump Icon and select/enter the following:
   a. AUTO/MANUAL pushbutton at the pop-up window is in the **AUTO** mode.
   b. Duty Pump On Time Setpoint
   c. Duty Pump Off Time Setpoint

5. Observe to verify the grit pump is operating correctly.

3.7.4.3 <u>Shutdown Procedures</u>

3.7.4.3.1 *Vortex Grit Chamber*

1. Communication check. Notify all personnel that the grit removal system is being shutdown.

2. Make provisions to bypass the grit removal system. Open the isolation stop plate (02-GAT-414) allowing influent flow to bypass the grit removal system.

3. Isolate the grit removal system by closing the slide gate upstream (02-GAT-410) and downstream (02-GAT-411) of the system.

4. Switch the L-O-R selector switch to **OFF** at 02-VCP-410 (adjacent to the impeller motor).

5. If there is a reason why the mixer should not be operated, padlock its breaker at 02-LCP-410 in the "**OFF**" position and attach a signed and dated "**DO NOT OPERATE**" tag indicating the problem.

6. Dewater the grit tank using the grit pumps as follows:
   a. In the headworks electrical room, position the grit pump L-O-R selector switch to **LOCAL** and push **START** at MCC-P3.

7. Once all the grit is removed from the bottom of the grit chamber, use 3W to wash down the grit chamber and flush the grit pump to prevent blockages.

3.7.4.3.2 *Grit Pumps*

1. Position the grit pump(s) L-O-R selector switches to **"OFF"** at MCC-P3.
2. If there is a reason why the grit pump(s) should not be operated, padlock its breaker at MCC-P3 in the "**OFF**" position and attach a signed and dated "**DO NOT OPERATE**" tag indicating the problem.
3. Close inlet and discharge valves to pump. If the pump is to remain out of service for a period of time longer than two weeks, the shaft must be rotated on a weekly basis to ensure positive coating on lubricated surfaces, thus retarding or preventing rust or oxidation.

3.7.4.3.3 *Grit Classifier*

1. Drain and wash down the grit classifier while operating the equipment in local mode as follows:
   a. In the headworks electrical room, position the grit pump L-O-R selector switch to **LOCAL** and push **START** at MCC-P3.
2. Position the grit classifier L-O-R selector switch to **"OFF"** at MCC-P3.
3. If there is a reason why the grit classifier should not be operated, padlock its breaker at MCC-P3 in the "**OFF**" position and attach a signed and dated "**DO NOT OPERATE**" tag indicating the problem.

3.7.5 Rotary Drum Screens

Communications check. Notify all involved personnel that the Rotary Drum Screen is being put into service.

3.7.5.1 <u>Pre-Startup and Safety Check</u>

3.7.5.1.1 *Rotary Drum Screens*

1. Verify the rotary drum screen is available for service.
2. Verify all equipment is off and locked out.
3. Lubricate equipment as specified in the manufacturer's O&M manual.
4. Check alarm systems. Test at the OIS and VCP.
5. Verify screenings disposal bin is empty and in place. Make sure the unit is secure so it will not move prior to filling.
6. Check that the rotary drum screen is clear of debris and personnel.
7. Verify all drive assembly components and guards are in place, properly aligned, and tensioned.

8. When any wires relative to the drive motor or power supply have been disconnected, disconnect drive assemblies and check for proper rotation. After checking rotation, reconnect drive.

3.7.5.1.2 *Screening Washer/Compactor*

1. Verify the screenings washer/compactor is available for service.
2. Verify all equipment is off and locked out.
3. Lubricate equipment as specified in the manufacturer's O&M manual.
4. Check alarm systems. Test at the OIS and VCP.
5. Verify screenings disposal bin is empty and no foreign materials are present. Make sure the unit is in place and secure so it will not move prior to filling.
6. Verify all drive assembly components and guards are in place, properly aligned, and tensioned.

3.7.5.2 <u>Startup Procedures</u>

3.7.5.2.1 *Rotary Drum Screens and Washer Compactor*

1. Communications check. Notify all personnel involved that the rotary drum screen and screenings washer/compactor are going to be in operation and are ready to receive flow.
2. From each Rotary Screen and Washer/Compactor VCP (02-VCP-310 and 02-VCP-320) located next to each unit, select/position the following:
   a. Position the local Disconnect switch to "**ON**."
   b. Switch the Screen L-O-R selector switch to **REMOTE**.
   c. Position the inside and outside spray O-C-A selector switches to **AUTO**.
   d. Switch the Compactor L-O-R selector switch to **REMOTE**.
   e. Position the zone spray O-C-A selector switch to **AUTO**.
3. From the Drum Screen HMI pop-up window, click on each Drum Screen Icon and select/enter the following:
   a. AUTO/MANUAL pushbutton at the pop-up window is in the **AUTO** mode.
   b. Solenoid valve cycles according to the drum screen operation (i.e., AUTO-CONTINUOUS) or set timer control (AUTO-INTERMITTANT).
4. Open plug valves 02-VAL-310 and 02-VAL-311 allowing wastewater to flow in and out of the first rotary drum screen (02-DS-320). Close the plug valve 02-VAL-320 to the second rotary drum screen (02-DS-330); this will prevent flow from entering the standby drum screen.

3.7.5.3 Shutdown Procedures

3.7.5.3.1 *Rotary Drum Screens and Washer Compactor*

1. Communications check. Notify all personnel that the rotary drum screen is being shutdown.
2. Make provisions to route flow through the standby rotary drum screen (02-DS-330). Open plug valve 02-VAL-321 to the second rotary drum screen (02-DS-330) and close plug valve 02-VAL-310 to the first rotary drum screen (02-DS-320).
3. Operate the first drum screen manually for 15 minutes while hosing to clear debris.
4. Allow the first drum screen to dewater. If necessary, close plug valve 02-VAL-311 immediately downstream to isolate the first drum screen.
5. From each Rotary Screen and Washer/Compactor VCP (02-VCP-310 and 02-VCP-320) located next to each unit, select/position the following:
   a. Switch the Screen L-O-R selector switch to **OFF**.
   b. Position the inside and outside spray O-C-A selector switches to **CLOSED**.
   c. Switch the Compactor L-O-R selector switch to **OFF**.
   d. Position the zone spray O-C-A selector switch to **CLOSED**.
6. If there is a reason why the rotary drum and screenings washer/compactor should not be operated, padlock its local Disconnect in the "**OFF**" position and attach a signed and dated "**DO NOT OPERATE**" tag indicating the problem.

3.8 ALARM CONDITIONS

This section describes alarm conditions that can occur during operation of the mechanical climber screen, screenings conveyor and compactor, and grit removal systems. The alarms provide for the operational surveillance of the facilities, alerting operators to abnormal conditions. Alarm conditions are annunciated through the PLC/OIS and/or at individual LCPs/VCPs.

3.8.1 Operational Strategies

When an alarm occurs, (1) the operator acknowledges the alarm at the LCP/VCP or PLC/OIS, (2) examines the process condition on the OIS, LCP/VCP, or MCC, and (3) takes remedial action, if possible. The operator then proceeds to the equipment originating the alarm. At the equipment that originated the alarm, the operator assesses the problem and determines the actions required. If possible, and if it can be accomplished safely, the operator corrects the problem. If the problem cannot be corrected or accomplished safely with available equipment and immediate action is required to prevent an illegal discharge or protect equipment, the operator should notify the Supervisor and obtain the necessary assistance and equipment. The established plant safety procedures are to be observed during all operations, including operation under emergency conditions.

The following sections contain descriptions of each alarm, its indication, possible causes, and suggested response actions. The alarms listed here do not include any of the "intuitive" alarms created within the PLC. "Intuitive" alarms include those that signal the failure of a PLC resident command. This section details actual process and instrumentation condition alarms incorporated in the design of the plant. Any subsequent modifications should be noted and included in this section of the O&M manual. Any future alarms added should also be updated in this chapter.

3.8.1.1 Influent Channel

3.8.1.1.1 *Composite Sampler Failure*

Indication: Composite Sampler fail alarm is indicated at the OIS. Sampler does not collect samples.

Action:

1. Acknowledge the alarm at the OIS.
2. Check sampler for clogging and jamming.
3. If unit is not operational, remove unit from service.
4. Grab headworks influent samples until composite sampler can be returned to service.

3.8.1.2 Mechanical Climber Screen

3.8.1.2.1 *Mechanical Climber Screen Failure*

Indication: Mechanical climber screen failure alarm is indicated at the LCP and OIS. Unit has stopped operating during its cycle.

Action:

1. Acknowledge the alarm at the OIS.
2. Check for obstruction in the climber screen. Lockout the equipment, remove the obstruction, and reset the operation of the equipment.

3.8.1.2.2 *Climber Screen Channel Level High*

Indication: Climber screen level high alarm is indicated at the OIS.

Action:

1. Acknowledge the alarm at the OIS.
2. Verify climber screen operating cycle is activated.
3. If high level persists, check climber screen failure alarm. Follow procedures for climber screen failure.

3.8.1.3 Screenings Washer and Compactor

3.8.1.3.1 *Screenings Compactor Overload*

Indication: An overload alarm is indicated at the OIS. Screenings compactor does not run.

Action:

1. Acknowledge the alarm at the OIS.
2. Reset and restart motor once.
3. If starts, reset alarm at OIS.
4. If unit will not run, remove unit from service. Check compactor for clogging.

3.8.1.4 Influent Pumps

3.8.1.4.1 *Influent Pump Failure*

Indication: Influent pump failure is indicated at the OIS.

Action:

1. Acknowledge the alarm at the OIS.
2. Check and reset the pump. Check the discharge pressure of the pump and verify fluid is being pumped. If something is lodged in the impeller, the pump will need to be removed, cleaned, and then returned to service.
3. If problem is not corrected, refer to the manufacturer's O&M manual.

3.8.1.4.2 *Motor High Temperature*

Indication: Influent pump motor high temperature alarm.

Action:

1. Acknowledge the alarm at the OIS.
2. Insert standby pump into sequence.
3. Remove pump from wet well to determine if impeller is clogged.
4. Reset alarm at VFD/MCC.

3.8.1.4.3 *Motor Casing Leakage Alarm*

Indication: An influent pump fail alarm is indicated at the OIS.

Action:

1. Acknowledge the alarm at the OIS.
2. Shut pump off and call pump service representative.

3.8.1.4.4 *Influent Wet Well Level High or Low Alarm*

Indication: An influent pump fail alarm is indicated at the OIS.

Action:

1. Acknowledge the alarm at the OIS.
2. Verify isolation slide gates located in the mechanical climber screen channel are open and climber screen is operating.
3. Check influent pumps for proper operation.
4. Visually verify wet well level.
5. Check operation of ultrasonic level detectors.
6. Manually operate influent pumps to maintain desired wet well level if necessary.
7. If high-level condition persists, climber screen should be shutdown and inspected for obstructions.
8. Divert flow through manual bar screen until problem is resolved.

3.8.1.4.5 *Influent Wet Well Level Low-Low or High-High Alarm*

Indication: Influent wet well level high-high or low-low alarm is indicated at the OIS.

Action:

1. Acknowledge the alarm at the OIS.
2. Check influent pumps for proper operation; restart if necessary.
3. Visually verify wet well level.
4. Override the high-high start switch if the wet well level is within set points. Override the low-low level shutoff switch if the wet well level is below 3.0 feet.
5. Check position of isolation slide gates in the mechanical climber screen channel to verify there are no restrictions.

3.8.1.5 Headworks Ventilation System

3.8.1.5.1 *Supply/Exhaust Fan Low Flow Alarm*

Indication: A low flow alarm is indicated at the OIS.

Action:

1. Check for proper operation of the fan.
2. Check for blockages at inlet louvers and verify that enough louvers are open.
3. Check for proper operation of low flow switch.

3.8.1.5.2 *High H_2S Alarm*

Indication: A high H_2S alarm is indicated at the OIS.

Action:

1. Acknowledge the alarm at the OIS.
2. Check the fans for proper operation and air discharge.
3. Verify fan louvers are not blocked.
4. Allow 15 minutes for air space to ventilate before entering the lower screenings area.
5. Using confined space entry, check air conditions inside using portable atmospheric analyzer.

3.8.1.5.3 *Air Lower Explosive Limit (LEL) Alarm*

Indication: A high LEL alarm is indicated at the OIS. Combustible gases have accumulated inside the headworks structure.

Action:

1. Acknowledge the alarm at the OIS.
2. Check the fans for proper operation and air discharge.
3. Verify louvers are not blocked.
4. Allow 15 minutes for air space to ventilate before entering the screenings room.
5. Using confined space, entry check air conditions inside using portable atmospheric analyzer.

3.8.1.6 Rotary Drum Screens and Conveyors

3.8.1.6.1 *Rotary Drum Screen Failure*

Indication: A fail alarm is indicated at the OIS.

Action:

1. Acknowledge the alarm at the OIS.
2. Place standby screen into service.
3. Check the screen's drive chain to see if the chain broke.
4. Check for debris that may prevent the drum from turning.
5. Check zero speed sensor to make sure the unit is in place.
6. Run the equipment in local to remove residual grit and obstructing debris.

7. Once all debris is clear and the unit appears to be operating correctly, place drum screen back into remote and check to make sure the unit stays operational.
8. If problem is not corrected, refer to the manufacturer's O&M manual.

3.8.1.6.2 *Motor High Temperature*

Indication: Motor high temperature alarm.

Action:

1. Acknowledge the alarm at the OIS.
2. Place standby screen in service.
3. Check the screen to ensure the screen is not overloaded or obstructed.
4. Try restarting screen with the local control panel.
5. If screen stays operational, place back into remote.

3.8.1.7 Grit Removal System

3.8.1.7.1 *Vortex Grit Chamber Failure*

Indication: A fail alarm is indicated at the OIS.

Action:

1. Acknowledge the alarm at the OIS.
2. Check and reset the pump. Check the discharge pressure of the pump and verify fluid is being pumped. If something is lodged in the impeller, the pump will need to be removed, cleaned, and then returned to service.
3. If problem is not corrected, refer to the manufacturer's O&M manual.

3.8.1.7.2 *Grit Pump Seal Water Alarm*

Indication: A grit pump fail alarm is indicated at the OIS.

Action:

1. Acknowledge the alarm at the OIS.
2. Check valve alignment on seal water system.
3. Attempt to restart grit pump while watching seal water field rotometer.
4. If grit pump fails from no seal water flow, look for closed valve or pump pressure higher than seal water pressure.
5. If grit pump fails because of low seal water flow, increase seal water flow and inspect the instrument.
6. Check for proper operation of low flow switch.

3.8.1.7.3 *Grit Classifier or Washer Failure*

Indication: A fail alarm is indicated at the OIS.

Action:

1. Acknowledge the alarm at the OIS.
2. Check the grit classifier and washer for grit accumulation and look for debris that may prevent the grit drive from turning.
3. Stop the grit pump and drain the equipment if required.
4. Run the equipment in local to remove residual grit and obstructing debris.
5. Restart the grit process. Note if grit pumping is shutdown for more than six hours. Pressurized air may be needed to fluidize the grit before it can be pumped.
6. If problem is not corrected, refer to the manufacturer's O&M manual.

3.8.2 Troubleshooting Strategies

Operations staff must have a good understanding of the headworks systems, which includes coarse and fine screens, screenings washer/compactors, centrifugal pumps, ventilation system, grit removal system, associated equipment, and problem indicators. Table 3.3 and 3.4 present potential operational problems and possible solutions for mechanical coarse and fine screens, respectively (Water Environment Federation, 1994 – Manual of Practice OM-2). Table 3.5 presents potential operational problems and possible solutions for grit chambers (Water Environment Federation, 1994 – Manual of Practice OM-2). It should be noted that these tables are not all-inclusive and may not correct the observed problem. Table 3.6 presents potential operational problems and possible solutions for centrifugal pumps (i.e., influent and grit pumps) (Operation of Municipal Wastewater Treatment Plants Vol. 1 Fifth Edition MOP-11, Water Environment Federation). With respect to mechanical and equipment problems, maintenance personnel should be notified immediately.

Additional information on specific problems may be found in equipment manufacturers' literature or text discussing wastewater treatment.

Table 3.3 Troubleshooting Guide For Mechanical Climber Screen DVI New Wastewater Treatment Plant California Department of Corrections and Rehabilitation

Indicators/Observations	Probable Cause	Check or Monitor	Solutions
Obnoxious odors, flies, and other insects	• Accumulation of rags and debris.	• Method and frequency of debris removal.	• Increase frequency of removal and disposal.

Table 3.3 Troubleshooting Guide For Mechanical Climber Screen DVI New Wastewater Treatment Plant California Department of Corrections and Rehabilitation			
Indicators/Observations	**Probable Cause**	**Check or Monitor**	**Solutions**
Excessive grit in sludge	• Surging in chamber because of increased water level.	• Depth of grit in chamber, irregular chamber bottom.	• Remove bottom irregularity, or reslope the bottom.
	• Flow velocity too low.	• Flow velocity.	• Increase flow velocity in chamber or flush regularly with a hose. • Provide submersible mixers or aeration and operate regularly.
Excessive screen clogging	• Unusual amounts of debris in wastewater (check flow contributors). • Inadequate cleaning frequency.	• Check upstream conditions. • Cleaning frequency.	• Increase cleaning frequency.
Mechanical rake inoperable, circuit breaker will not reset	• Jammed mechanism.	• Screen channel.	• Remove obstruction; adjust tension if appropriate.
Rake inoperative but motor runs	• Broken chain or cable. • Broken limit switch. • Broken shear pin.	• Inspect chain or cable. • Inspect switch. • Inspect shear pin.	• Replace chain or cable. • Replace limit switch. • Replace shear pin. • Correct cause of shear pin breakage.
Rake inoperative, no visible problem	• Defective remote control circuit. • Defective motor. • Automatic control system failure.	• Check switching circuits. • Check motor operation. • Check control system components.	• Replace circuit. • Replace motor. • Replace inoperable components.
Marks or metal against metal onscreen binding	• Screen needs adjustment.	• Operate screen through one cycle and listen/observe.	• Make manufacturer's recommended adjustment listed in operation and maintenance manual.

Table 3.4 Troubleshooting Guide For Fine Screens DVI New Wastewater Treatment Plant California Department of Corrections and Rehabilitation			
Indicators/Observations	**Probable Cause**	**Check or Monitor**	**Solutions**
Effluent solids too high	• Influent flow solids characteristics have changed considerably from original design sample.	• Sample solids.	• A different type of screen medium may be needed to obtain satisfactory effluent.
	• Grids not properly sealed.	• Check the condition of the rubber sealing strips and the tightness of the hold down bars on the grids.	• Repair or replace media grids.
	• Influent drum seal leaking.	• Check the condition of the influent seal for wear or damage and the seal alignment; replace the seal if worn or damaged.	• Repair if broken.
Excessive head loss	• Influent flow rate greater than design rate.	• Influent flow rate.	• Reduce rate of flow to screen.
	• Raw flow solids concentration greater than design rate.	• Sample.	• Increase screen speed, increase backwash; if this does not work, cut down on the influent flow.
	• Screen media clogged or blinded.	• Check backwash system output; self-cleaning nozzles require a minimum pressure.	• Clean nozzles if dirty.
		• Check wash trough drain for clogged condition.	• Clean if dirty.
	• Low backwash water flow and/or pressure.	• Check in-line strainer	• Clean if dirty.
		• Check if nozzles are clogged by noting any breaks in fan shaped spray.	• Clean if dirty.

Table 3.4 Troubleshooting Guide For Fine Screens DVI New Wastewater Treatment Plant California Department of Corrections and Rehabilitation			
Indicators/Observations	**Probable Cause**	**Check or Monitor**	**Solutions**
	• Media blinded with grease.	• Observe condition of media.	• Use pressurized or hot spray water; in severe cases scrub down with detergent solution.
	• Slime buildup on screen surface.	• Observe condition of media.	• Apply 10 to 20% sodium hypochlorite solution for slime; apply a phosphoric/citric acid solution for mineral deposits, particularly calcium carbonate or iron oxide.
High differential alarm	• Control system is not in automatic mode.	• Position of switch.	• Adjust controls to correct the cause (place switch in auto position).
	• Drum not rotating.	• Shear pin condition.	• Shear pin failure - correct cause for shear pin breaking and replace pin.
	• Power failure.	• Power status.	• Restart unit after power return.
	• Backwash system failure.	• Check to see if pump is operating.	• Refer to corrections for screen media clogged or blinded.
	• Alarm point set too low.	• Check set point.	• Review general arrangement drawings and design information; readjust the alarm setpoint if necessary.
	• Air supply to differential control system stopped.	• Check compressor and related components.	• Clean out and tighten up air lines; drain out any condensation.

Table 3.4 Troubleshooting Guide For Fine Screens DVI New Wastewater Treatment Plant California Department of Corrections and Rehabilitation			
Indicators/Observations	**Probable Cause**	**Check or Monitor**	**Solutions**
Premature wear of support wheels	• Misalignment between supporting frame and screen riding ring.	• Measure the distance between the riding ring and the front supporting frame in at least four positions 90 degrees apart; the dimensions should be the same.	• Adjust at drive shaft pillow block if necessary.
	• Misalignment of support wheels.	• Check alignment.	• Correct alignment.
Spray nozzles will not return to spraying position after cleaning cycle	• Volume ad pressure of water is not sufficient to close nozzles.	• Observe position of nozzles.	• Slowly open isolation valve and spray pipe header until water pressure forces nozzles into spray position.
	• Calcium deposit or other debris clogging nozzles.	• Observe flow pattern from nozzle.	• Manually unclog nozzle.
Excessive noise	• Misalignment of sprockets.	• Check alignment.	• Correct alignment.
	• Too little or too much chain/belt slack.	• Tension and slack in chain or belt.	• Adjust centers; add or remove links or adjust take-ups for proper slack.
	• Chain or sprocket worn out.	• Observe teeth and chain; verify dimensions as opposed to row.	• Replace chain and/or sprocket (some sprockets can be reversed).
Wear on chain, chain side bars or link plates and sides of sprocket teeth	• Misalignment.	• Dimensions of existing as opposed to new.	• Remove chain and correct alignment of sprockets and shafts.

Table 3.4 Troubleshooting Guide For Fine Screens DVI New Wastewater Treatment Plant California Department of Corrections and Rehabilitation			
Indicators/Observations	**Probable Cause**	**Check or Monitor**	**Solutions**
Chain climbs sprockets	• Chain worn out.	• Condition of chain.	• Replace chain and sprockets (some sprockets can be reversed).
	• Excessive chain slack.	• Chain tension and slack.	• Adjust center; remove links or adjust take-ups for proper slack.
	• Material buildup in sprocket tooth pockets.	• Observe condition of sprocket teeth.	• Remove material buildup; protect drive from contact with foreign material or use sprockets with mud relief, pitch line clearance.
Broken chain pins	• Material buildup in sprocket tooth pockets.	• Observe condition of sprocket teeth.	• Remove material buildup; protect drive from contact with foreign material or use sprockets with mud relief, pitch line clearance.
Chain clings to sprockets	• Badly worn sprockets.	• Observe condition of sprockets.	• Replace chain and sprockets (some sprockets can be reversed).
	• Material buildup on driver sprocket tooth pockets.	• Observe condition of sprockets.	• Remove material buildup; protect drive from contact with foreign material or use sprockets with mud relief, pitch line clearance.

Table 3.4 Troubleshooting Guide For Fine Screens DVI New Wastewater Treatment Plant California Department of Corrections and Rehabilitation			
Indicators/Observations	**Probable Cause**	**Check or Monitor**	**Solutions**
Chain gets stiff	• Peening of side plate edges.	• Check for chain interference and correct.	• Repair and replace.
	• Misalignment.	• Check sprocket and shaft alignment.	• Repair, realign, and replace.
	• Chain is corroded.	• Observe condition of chain.	• Clean up chain and replace if wear is excessive.
Broken sprocket teeth	• Obstructions or foreign material in chain case.	• Check chain and sprocket clearances.	• Remove foreign material.
	• Excessive shock loads, especially with small, cast iron sprockets.	• Loading.	• Reduce excessive shock loads or use steel.
	• Chain climbing sprocket teeth.	• See section of chain climbs sprocket teeth.	• See section of chain climbs sprocket.
Drive chain cotter pins come out	• Obstructions striking cotters.	• Observe.	• Eliminate obstruction or tap cotter ends back around pin until cotter fits snugly against side plates - or use riveted chain.
	• Cotter not installed properly.	• Observe.	• Spread cotter ends and draw ends back snug against pin and lock.

Table 3.5 Troubleshooting Guide For Grit Chambers DVI New Wastewater Treatment Plant California Department of Corrections and Rehabilitation			
Indicators/Observations	**Probable Cause**	**Check or Monitor**	**Solutions**
Rotten egg odor in grit chamber	• Hydrogen sulfide formation. • Velocity too low. • Submerged debris.	• Total and dissolved sulfide concentration. • Velocity. • Debris accumulation in chamber.	• Wash chamber and dose with hypochlorite. • Increase velocity or add chemical to oxidize sulfide or raise pH to keep sulfides in solution. • Wash chamber daily.
Corrosion of metal and concrete	• Inadequate ventilation.	• Ventilation.	• Increase ventilation.
Removed grit is gray in color; smells and feels greasy	• Grit removal system velocity too low.	• Velocity, using dye releases.	• Increase velocity in grit chamber.
Low recover rate of grit	• Bottom scour. • Not enough retention time.	• Velocity. • Retention period.	• Main velocity near 0.3 m/s (1 ft/sec). • Increase retention. • All of the above.
Overflowing grit chamber	• Pump surge protection.	• Pumps.	• Adjust pump control.
Septic waste with grease and gas bubbles rising in grit chamber.	• Sludge on bottom of chamber.	• Grit chamber bottom.	• Wash chamber daily. • Increase velocity.
High organic content in grit	• Velocity too low. • Grit washing.	• Velocity control device. • Classifier and washer controls.	• Increase velocity. • Check timers and automatic controls.

Table 3.5 Troubleshooting Guide For Grit Chambers DVI New Wastewater Treatment Plant California Department of Corrections and Rehabilitation			
Indicators/Observations	**Probable Cause**	**Check or Monitor**	**Solutions**
No grit flow or inadequate grit flow from pump	• Heavy grit – difficult to lift. • Debris blocking or partially blocking suction of pump.	• Blockage in suction or discharge of pump. • Check if problem is with one grit pump or grit suction valves.	• Open and close discharge flow control valve to pulse grit flow. • Inject air into grit manifold to fluidize the grit packed around the suction line. • Increase grit pump flow rate.

Table 3.6 Troubleshooting Guide For Centrifugal Pumps DVI New Wastewater Treatment Plant California Department of Corrections and Rehabilitation		
Problem	**Causes**	**Solutions**
No liquid delivered	• Pump not primed. Speed too low. • Air leak in suction or stuffing box. • Suction or discharge line plugged. • Wrong direction of rotation. • Discharge valve closed.	• Prime pump. Check voltage and frequency. • Repair leak. • Unplug line. • Correct direction of rotation. • Open discharge valve.
Not enough pressure	• Speed too low. • Air leak in suction or stuffing box. • Damaged impeller or casing. • Wrong direction of rotation.	• Check voltage and frequency. • Repair leak. • Repair or replace. • Correct direction of rotation.
Motor runs hot	• Liquid heavier and more viscous than rating. • Packing too tight. • Impeller binding or rubbing. • Defects in motor. • Pump or motor bearing overlubricated.	• Increase dilution factor. • Adjust packing. • Align impeller properly. • Repair or replace motor. • Lubricate bearing properly.

Table 3.6 Troubleshooting Guide For Centrifugal Pumps DVI New Wastewater Treatment Plant California Department of Corrections and Rehabilitation		
Problem	**Causes**	**Solutions**
Stuffing box overheats	• Packing too tight, not enough leakage of flush liquid. • Packing not sufficiently lubricated and cooled. • Wrong grade of packing. • Box not properly packed. • Bearings overheated. • Oil level too low or too high. • Improper or poor grade of oil. • Dirt or water in bearings. • Misalignment. • Overgreased.	• Adjust packing. • Adjust packing. • Replace packing. • Properly pack box. • Grease properly, check tightness. • Adjust oil level to proper level. • Replace with proper grade of oil. • Clean and regrease the bearings. • Align properly. • Grease bearings properly.
Bearings wear rapidly	• Misalignment. • Bent shaft. • Lack of lubrication. • Bearings improperly installed. • Moisture in oil. • Dirt in bearings. • Overlubrication.	• Align properly. • Repair or replace. Correct source of vibration. • Lubricate bearings. • Reinstall bearing properly. • Replace oil. • Clean and relubricate. • Lubricate properly.
Not enough liquid delivered	• Air leaks in suction of stuffing box. • Speed too low. • Suction or discharge line partially plugged. • Damaged impeller or casing.	• Repair leaks. • Check voltage and frequency. • Unplug line. • Repair or replace.
Pump works for a while then loses suction vibration	• Leaky suction line. • Air leaks in suction or at stuffing box. • Misalignment of coupling and shafts. • Worn or loose bearings. • Rotor out of balance. • Shaft bent. • Impeller damaged of unbalanced.	• Repair suction line. • Repair leaks. • Properly align coupling and shafts. • Replace or tighten bearings. • Balance rotor. • Repair or replace shaft. • Repair or balance impeller.

3.9 SAFETY

These safety instructions are provided as general guidelines only for operation of the headworks facilities. They are not intended to replace existing plant safety instructions and procedures.

If there is any doubt whatsoever about the safety of performing any tasks related to the operation and maintenance of the equipment described here, do not proceed until the necessary protection is provided.

3.9.1 Motors and Electrical Panels

When working with electricity, you must always assume that there is sufficient voltage and current present to cause injury. As little as 12 volts or .005 amperes can be dangerous.

Whenever working on motors or electrical panels that are “hot,” still connected to the power source, or assumed to be “hot,” do not use your bare hands to perform any internal maintenance. The use of certified rubber electrician’s gloves with protective leather gloves covering them is recommended. Voltages in treatment plants can run in excess of 4,000 volts; therefore, the rubber gloves should be certified for no less than 10,000 volts.

Prior to working on any of the above-mentioned units in place:

1. Open or place all control switches for the unit in the “**OFF**” position.
2. Open the main and control power circuit breakers and lock them open or remove the fuses. The open circuit breaker should be tagged to indicate the reason for its being locked open.
3. Open any foreign voltage circuits that may be present, and lock and tag them.
4. Before starting work on the piece of equipment, check all exposed terminals or connections with a voltmeter before removing the rubber gloves.

3.9.2 Pumps

Before working on any of the pumps in the plant, open, lockout, and tag the main and control power circuits as described above. No pump should be worked on internally while the control and main power circuits are “hot” (see above). Double-check both suction and discharge valves to be positive they are closed. Relieve the internal pressure on the pump before the inspection cover is removed or dismantling of the pump begins. While working on the pump, keep the area as neat and orderly as possible. If sludge or any of the pump lubricant is spilled, it should be cleaned up immediately to prevent falls or other types of injuries or, in the case of the sludge, extended exposure to potentially harmful organisms.

3.9.3 Miscellaneous Items

When working on any piece of equipment, in place, keep the working area as orderly as possible. Keep safety barriers and rails in place when possible. When a safety barrier must be removed to permit access to a piece of equipment, caution should be used when outside of the barrier and be sure to replace the barrier when you are finished with the job.

3.9.3.1 Confined Spaces

Prior to entering a confined space, which has contained sewage, it should be thoroughly hosed down with clean water, any sludge pumped out or otherwise removed and properly ventilated. The operator should not enter alone, but should be attached to a lifeline attended above by another operator. If adequate ventilation and fresh air circulation cannot be provided, self-contained breathing equipment should be used. If this is not possible, an oxygen meter and explosive gas meter should be lowered into the confined space. These two meters should be kept in the work area while workers are present. Should either meter register a hazardous condition, do not enter the area until proper ventilation has been provided. If either meter registers a hazardous condition after work has begun, all of the workers should leave the work area until proper ventilation can be provided.

3.9.3.2 Uncovered Water-Filled Structures

Operator should always use extreme caution when working near uncovered water-filled structures. Most tanks or basins in a treatment plant that fall into this category are provided with protective barriers, i.e., hand rails, etc., to prevent someone from accidentally falling into the tank. Openings are provided in the railing to give access to the tanks; these should be used. Do not climb over or through the rails: This practice invites a fall. When the job is complete, reclose the opening in the barrier, and make sure it is secured.

3.9.3.3 Routine Operations

No job is so important nor is speed or completion that critical that safety procedures should be ignored. Your carelessness can involve not only your own safety, but also that of others. Follow safety regulations, use prescribed safety procedures, and above all else, think before you act. In addition, the following precautions should be observed.

1. Wear safety boots or shoes with nonskid soles.
2. Watch your footing when working on wet surfaces.
3. Keep all hoses and tools picked up and properly stored.
4. Keep the guards on all machinery during operation.
5. Walk – DO NOT RUN – down the stairs; use the handrail.
6. Keep your hands and tools away from moving equipment.

7. Before starting, stopping, or operating any of the equipment in the treatment plant, think about what hazards are created by these actions and what needs to be done to prevent these hazards from having an effect on the safe operation of the equipment.

3.10 MAINTENANCE

The plant should update any current maintenance procedures with the appropriate detailed information from the manufacturers' O&M manuals. The procedures and maintenance schedule recommended by the manufacturer's publications must be followed to maintain complete warranty coverage of the plant equipment and ancillary equipment. After the warranty period, revisions to the maintenance schedules should be based on the operation and maintenance experience and approved by a designated manager. The revisions should address the frequency of mechanical inspection based on the amount of wear observed during the warranty period.

Deuel Vocational Institution

New Wastewater Treatment Plant

O&M Manual
Activated Sludge System

TABLE OF CONTENTS

Page No.

Chapter 4 4-1

4.1 GENERAL PROCESS DESCRIPTION 4-1
4.2 DESIGN CRITERIA 4-3
4.3 COMPONENT/EQUIPMENT LISTINGS 4-5
4.4 COMPONENT DESCRIPTION 4-9
4.4.1 Aeration Tank Splitter Box and Weir Gates 4-9
4.4.2 Aeration Tanks 4-9
4.4.3 Anoxic System for Aeration Tanks 4-16
4.4.4 Aeration System for Aeration Tanks 4-19
4.4.5 Membrane Bioreactor System 4-30
4.4.6 Membrane Air Scour System 4-39
4.4.7 MBR Cleaning System 4-43
4.4.8 RAS/WAS System 4-47
4.4.9 Utility System 4-49
4.5 ACTIVATED SLUDGE PROCESS CONTROL 4-51
4.5.1 Process Performance and Evaluation 4-51
4.5.2 Microscopic Analysis of MLSS 4-59
4.5.3 Process Control 4-62
4.5.4 Process Calculations 4-63
4.5.5 Process Control 4-69
4.5.6 Dissolved Oxygen Control 4-69
4.5.7 RAS Flow Rate 4-70
4.5.8 Sludge Wasting Rate Control and SRT Control 4-70
4.6 NORMAL OPERATION PROCEDURES 4-73
4.6.1 Aeration Tanks 4-73
4.6.2 Aeration Blowers 4-74
4.6.3 Membrane Bioreactor System 4-74
4.6.4 RAS/WAS Systems 4-74
4.7 EMERGENCY OPERATION PROCEDURES 4-75
4.7.1 Power Outage 4-75
4.7.2 Equipment Malfunctions 4-75
4.7.3 Unable to Meet Air Demand 4-75
4.7.4 Unable to Meet Air Demand above a Single Aeration Grid 4-76
4.7.5 Excessive Foaming 4-76
4.7.6 Plugging of Sludge Ports on RAS Removal System 4-76
4.7.7 Malfunctioning Pump 4-76
4.7.8 Malfunctioning Control System 4-76

4.8 STARTUP/SHUTDOWN PROCEDURES 4-77
4.8.1 Biological Treatment Process 4-77
4.8.2 Aeration Blowers 4-80
4.8.3 Membrane Bioreactor System 4-81
4.8.4 RAS/WAS System 4-82
4.9 ALARM CONDITIONS 4-82
4.9.1 Operational Strategies 4-83
4.9.2 Troubleshooting Strategies 4-84
4.10 SAFETY 4-96
4.10.1 Motors and Electrical Panels 4-96
4.10.2 Pumps 4-97
4.10.3 Miscellaneous Items 4-97
4.11 MAINTENANCE 4-98

LIST OF TABLES

Table 4.1 Activated Sludge System Design Criteria 4-3
Table 4.2 Component/Equipment Listings 4-5
Table 4.3 Component/Equipment Listings 4-7
Table 4.4 Component/Equipment Listings 4-8
Table 4.5 Component/Equipment Listings 4-8
Table 4.6 Diffuser System for Aeration Tanks 4-20
Table 4.7 Troubleshooting Strategy for Aeration Process 4-85
Table 4.8 Troubleshooting Guide For MBR System 4-86

LIST OF FIGURES

Figure 4.1 Aeration Tanks Bottom Plan View 4-10
Figure 4.2 Aeration Tanks Top Plan View 4-11
Figure 4.3 Aeration Tanks Partial Plan and Sections 4-12
Figure 4.4 Aeration Tanks Sections 4-13
Figure 4.5 Blower/Electrical Building Plan View 4-26
Figure 4.6 Membrane Tanks Plan View 4-32
Figure 4.7 Membrane Tanks Sections 4-33
Figure 4.8 Blower/Electrical Building HVAC Plan View 4-50

LIST OF PHOTOS

Photo 4.1 Anoxic Mixer 4-18
Photo 4.2 Aeration Blower No. 3 4-27
Photo 4.3 Aeration Blower No. 1 Motor Control Center 4-29
Photo 4.4 MBR Feed Pump No. 1 4-35
Photo 4.5 MBR Permeate Pump No. 1 4-38
Photo 4.6 Membrane Blower No. 1 4-40
Photo 4.7 Membrane Blower No. 1 Motor Control Center 4-42
Photo 4.8 Waste Activated Sludge Control Valve 4-48

BIOLOGICAL TREATMENT PROCESS

4.1 GENERAL PROCESS DESCRIPTION

The biological treatment process provides secondary and tertiary treatment at the Deuel Vocational Institution (DVI) New Wastewater Treatment Plant (WWTP). The biological treatment process stabilizes the soluble and dissolved organic matter in the wastewater by biological oxidation, to produce a settleable floc (i.e., activated sludge), which is removed in a filtration process. A large portion of the solids is returned to the aeration tanks as return activated sludge (RAS). Excess solids not needed by the process (i.e., waste activated sludge (WAS)) are wasted to a solids thickening unit or feed into a stabilization process (i.e., aerobic/anaerobic digestion) to maintain a consistent solids inventory. Thus, a basic activated sludge system consists, at a minimum, of three processes: (1) aeration process, (2) clarification/filtration process, and (3) sludge handling process. The first and second processes are described in this chapter while the third process is described in a following chapter.

Activated sludge treatment is accomplished by providing the naturally occurring microorganisms in wastewater an enhanced environment so they grow and multiply far beyond their normal populations. For proper operation of the activated sludge process, a healthy population of microorganisms in the aeration tanks must be maintained by supplying sufficient food (i.e., raw wastewater (RWW)) and oxygen. The microorganisms consume the soluble and particulate organic food matter in the RWW. They convert the organic material and available oxygen to new cell growth or use the energy for cell maintenance.

The liquid in the aeration tanks is called mixed liquor suspended solids (MLSS) or mixed liquor (ML). The ML microorganisms consist of bacteria, protozoa, fungi, and other microorganisms, which are predominately aerobic and require oxygen in order to metabolize the organic matter for cell maintenance and growth. Air is used as the oxygen source and is commonly introduced into the tanks through diffuser panels at the bottom of the tank. As the air bubbles through the mixture, oxygen is transferred into solution through the surface of the bubble, while carbon dioxide and other byproducts of the aerobic reaction are stripped out. The small diameter bubbles of fine bubble diffusion system have a large surface area to volume ratio and can transfer oxygen efficiently to the ML. Additionally, the air provides mixing to ensure contact between the microorganisms and organic food.

In a conventional activated sludge plant after the oxidation step is complete, the ML is transferred to secondary clarifiers in conventional systems or to membrane filtration tanks for membrane bioreactor (MBR) systems. The organisms are separated from the treated wastewater via settling in the secondary clarifiers or filtering through membranes. The sludge settled in the secondary clarifiers or retained in the MBR system contains a high

concentration of microorganisms. Alternatively, the treated effluent is virtually free of suspended material. The settled/filtered sludge is still biologically active (i.e., alive) and it is necessary that a portion of this sludge, called RAS, is returned to the aeration process to seed the incoming wastewater with microorganisms. Additionally, it is important to maintain the right population of organisms in the aeration tank; hence, the unnecessary portion of the settled/filtered sludge (i.e., WAS) needs to be wasted. The amount of sludge to be removed from the activated sludge process must be determined in a manner, which balances new cell growth with removal to maintain a healthy and consistent microbiological population. Typically, MBR systems are operated at higher ML concentrations than conventional activated sludge processes. The removal of excess solids from the activated sludge process is commonly termed “wasting.” Typically, the WAS is pumped to a thickening or stabilization process prior to ultimate disposal.

The activated sludge process may be designed to not only remove organic wastes, but also to convert inorganic soluble ammonia to soluble nitrate in a process referred to as “nitrification.” Ammonia in its un-ionized form is toxic to fish at low concentrations; nitrification lowers the effluent ammonia concentrations to safe levels. The nitrification process and organic waste oxidation occur simultaneously in the aeration process, however a significant amount of the aeration is required for nitrification to occur. The nitrification process consumes alkalinity from the process water, which can cause pH instability, thus leading to incomplete nitrification. Therefore, in some cases a supplementary source of alkalinity must be added as part of the treatment process.

Additionally, the activated sludge process can also be used to convert the nitrate, created from the aerobic zones, to nitrogen gas. This denitrification process can be accomplished by providing an anoxic zone for denitrification microbes to proliferate. A tank it typically provided at the front of the treatment process, and the RAS from clarifiers or membrane tanks is recycled to the anoxic tank, rather than the aerobic tank, which typically follows. This combination of anoxic and aerobic tankage not only can perform simultaneous nitrification/denitrification, but can also provide for some recovery of alkalinity, when compared to the aerobic process alone, reducing chemical usage.

For the DVI New WWTP, the activated sludge process is modified by incorporation of the MBRs; membranes take the place of the clarifier in a conventional activated sludge process. The system incorporates an influent splitter box, which discharges to a two-stage anoxic zone (no aeration, no significant aeration, no significant dissolved oxygen present, substantial nitrate present), where denitrification occurs. The anoxic tank is followed by an aerobic zone (substantial aeration present). In the aerobic zone, the conversion of ammonia to nitrate (i.e., nitrification) occurs. To insure complete nitrification, sodium bicarbonate is added before the activated sludge process to maintain alkalinity levels. Refer to Chapter 7 for the operation and controls of the sodium bicarbonate system.

After the aerobic zone, the ML flows to a wet well, from which it is pumped to membrane tanks (substantial aeration, effluent removal). The RAS, containing a high nitrate

concentration, is recycled from the membrane tanks to the influent splitter box at a rate of up to 500 percent of influent flow. RAS flows over a weir on each of the operating membrane tanks and flows back to the influent splitter box by gravity. Since the membranes are immersed in a separate tank, this high return rate is required to maintain a high MLSS concentration in the biological reactor. A collateral result of this high return sludge rate is a high rate of return of nitrate to the anoxic zones of the biological reactor.

This chapter describes the general process and operation of equipment associated with activated sludge processes. For detailed operation and maintenance information on individual equipment associated to the activated sludge, refer to the associated manufacturer's operations and maintenance (O&M) manual.

4.2 DESIGN CRITERIA

The design criteria for the activated sludge processes are presented in Table 4.1.

Table 4.1 Activated Sludge System Design Criteria
DVI New Wastewater Treatment Plant
California Department of Corrections and Rehabilitation

Descriptions	Units	Value
Aeration Tanks		
Type		Rectangular
Number		2
Basin Length, (Each)	feet	90.25
Basin Width, (Each)	feet	20
Basin Depth	feet	18.3
Total Volume, (Each)	gallons	236,000
Aerobic Volumetric Loading, average day maximum month (ADMM)	Lbs BOD_5/1,000 CF-day	62
Hydraulic Retention Time, ADMM	hours	0.1
Mixed Liquor Suspended Solids, ADMM	mg/L	8,540
Solids Retention Time, ADMM	days	10.3
Mechanical Mixers		
Type	Submersible	
Number, (Each Tank)	--	2
Aeration System for Aeration Tanks		
Type	Membrane Diffusers	
Diffuser Diameter	inch	9
Aeration Air Supply System/Blowers		
Type	Positive Displacement	
Drive Type	VFDs	
Number	--	2 + 1 Standby

Table 4.1 Activated Sludge System Design Criteria DVI New Wastewater Treatment Plant California Department of Corrections and Rehabilitation		
Descriptions	**Units**	**Value**
Capacity, (Each)	scfm @ psig	1,093 @ 23
Maximum Air Required	scfm	2,186
Membrane Feed Pumps		
Type	Submersible	
Drive Type	VFDs	
Number	--	3 + 1 Standby
Capacity, (Each)	gpm @ feet TDH	1,920 @ 43
Transfer Pumps		
Type	Submersible	
Number	--	2
Capacity, (Each)	gpm @ feet TDH	350 @ 35
Membrane Tanks		
Number		4
Length, (Each)	feet	23
Width, (Each)	feet	10
Approx. Sidewater Depth	feet	10
Freeboard Depth	feet	2
Volume, (Each)	gallons	17,200
Permeate/Backpulse Pumps		
Type	Reversible Rotary Lobe Pump	
Drive Type	VFDs	
Number	--	4 + 1 Standby
Capacity, (Each)	gpm @ psig	512 @ 13
Membrane Air Scour Blowers		
Type	Positive Displacement	
Drive Type	VFD's	
Number	--	2 + 1 Standby
Inlet Airflow Rate, (Each)	scfm	1710
Discharge Pressure, (Each)	psig	
Clean in Place (CIP) Tank		
Number	--	1
Capacity	gallons	20,510
Membrane CIP Pump		
Type	ANSI Horizontal End Suction Pump	
Drive Type	Constant	
Number	--	1
Capacity, (Each)	gpm	250 @ 25 feet TDH

Table 4.1 Activated Sludge System Design Criteria DVI New Wastewater Treatment Plant California Department of Corrections and Rehabilitation		
Descriptions	**Units**	**Value**
Blower Room Exhaust Fan		
Type	Centrifugal Sidewall Exhauster	
Drive Type	Constant Speed	
Number	--	1
Capacity	cfm	1,484

4.3 COMPONENT/EQUIPMENT LISTINGS

The listing of the major components and equipment items, including the function and purpose of each, for the solids handling system are presented in Tables 4.2, 4.3, 4.4, and 4.5.

Table 4.2 Component/Equipment Listings
DVI New Wastewater Treatment Plant
California Department of Corrections and Rehabilitation

Name	Tag No(s).	Qty.	Characteristics	Function/Purpose
Weir Gates	03-GAT-100 03-GAT-200 03-GAT-300	3	48-inch x 30-inch, Manually operated weir gate	Regulates flow to the two aeration tanks and the sludge storage tank (SST)
Slide Gate	03-GAT-101	1	24-inch x 24-inch, Manually operated slide gate	Controls the influent wastewater flow into Aeration Tank 1
Slide Gates	03-GAT-102 03-GAT-202	2	24-inch x 24-inch, Manually operated slide gate	Prevents backflow of wastewater from the aeration zone to the anoxic zone
Sluice Gates	03-GAT-103 03-GAT-203	2	24-inch x 24-inch, Manually operated sluice gate	Allows settled solid in aeration tanks to drain to the membrane wet wells
Aeration Tank Foam Spray Solenoid Valves	03-SV-100 03-SV-200	2	Solenoid valves	Controls water spray for foam control in the aeration tanks
Mechanical Mixers	03-MIX-110 03-MIX-120 03-MIX-210 03-MIX-220	4	4.7-hp, Submersible mechanical mixers manufactured by ABS Pumps, Inc.	Prevents solids settling and maintain a homogeneous blend of microorganisms and influent wastewater in the anoxic zones

Table 4.2 Component/Equipment Listings DVI New Wastewater Treatment Plant California Department of Corrections and Rehabilitation				
Name	**Tag No(s).**	**Qty.**	**Characteristics**	**Function/Purpose**
Transfer Pumps	03-PMP-310 03-PMP-320 03-PMP-330	3	4.69-hp, Constant speed non-clog centrifugal submersible pumps manufactured by ABS Pumps, Inc., 353 gpm @ 25.4 feet TDH	Transfers ML or drained solids to an operational process tank or membrane wet well
Airflow Butterfly Valves	03-VAL-101 03-VAL-102 03-VAL-201 03-VAL-202	4	Manually operated 8-inch butterfly valves	Controls the delivery of air to each aeration grid
Membrane Feed Pumps	03-PMP-410 03-PMP-420 03-PMP-430 03-PMP-440	4	33.5-hp, Non-clog centrifugal submersible pumps manufactured by ABS Pumps, Inc. with variable frequency drives (VFDs), 1,917 gpm @ 33.9 feet TDH	Feeds ML to the membrane tanks
Sluice Gate	03-GAT-401	1	24-inch x 24-inch, Manually operated sluice gate	Allows membrane wet wells to be separate or combined compartments
Major Instruments				
Drop Leg Air Flow Meter	03-FE-101 03-FE-102 03-FE-201 03-FE-202	4	Pitot gauge with portable analog output scaled 0 to 400 scfm	Measures airflow through each drop leg
Dissolved Oxygen Analyzer	03-AIT-101 03-AIT-201 03-AIT-301	3	0-20 mg/L	Measures dissolved oxygen (DO) levels in the aeration tanks and solids holding tank
Membrane Feed Flowmeter	03-FIT-401	1	0-8,000 gpm, 16-inch magnetic flowmeter	Measures the ML flow to the membrane tanks
Membrane Wet Well Level Transmitters	03-LE-402 03-LE-404	2	Ultrasonic transmitter	Monitors the membrane wet well level

Table 4.3 Component/Equipment Listings DVI New Wastewater Treatment Plant California Department of Corrections and Rehabilitation				
Name	**Tag No(s).**	**Qty.**	**Characteristics**	**Function/Purpose**
Membrane Tank Feed Valves	04-VAL-100 04-VAL-200 04-VAL-300 04-VAL-400	4	10-inch, motorized butterfly valve	Isolates the feed water and the membrane tank
Membrane Permeate/ Backpulse Pumps	04-PMP-100 04-PMP-200 04-PMP-300 04-PMP-400 04-PMP-500	5	Rotary lobe positive displacement pumps with VFDs	Conveys membrane effluent to the ultraviolet (UV) disinfection system and the standpipe Delivers backpulse water to the membrane tanks
Membrane Clean In Place (CIP) Tank	04-TNK-520	1	20,510 gallons	Stores Citric Acid or Sodium Hypochlorite used for membrane recovery cleans
Membrane CIP Pump	04-PMP-520	1	5-hp, ANSI Horizontal End Suction Pump manufactured by Vanton Pump and Equipment Corp., 200 gpm @ 25 feet TDH	Transfers CIP chemicals back and forth for membrane cleanings
WAS Flow Control Valve	04-VAL-002	1	Motorized 6-inch butterfly valve	Controls the amount of sludge wasted to the SST
Major Instruments				
Membrane Effluent Flowmeters	04-FIT-100 04-FIT-200 04-FIT-300 04-FIT-400 04-FIT-500	5	0-1,000 gpm, 6-inch magnetic flowmeter	Measures the membrane effluent and backpulse flow
Suspended Solids Analyzer	04-AIT-003	1	0-20,000 mg/L	Measures suspended solids in WAS flow
WAS Flowmeter	04-FIT-003	1	0-250 gpm, 6-inch magnetic flowmeter	Monitors the WAS flow rate to the solids storage tank

Table 4.4	**Component/Equipment Listings DVI New Wastewater Treatment Plant California Department of Corrections and Rehabilitation**			
Name	**Tag No(s).**	**Qty.**	**Characteristics**	**Function/Purpose**
Aeration Blowers	05-BLO-310 05-BLO-320 05-BLO-330	3	60-hp, Rotary lobe positive displacement blowers with VFDs	Provides air to the fine bubble diffusion system in the aeration tanks and SST
Blower Outlet Valves	05-VAL-312 05-VAL-322 05-VAL-332	3	6-inch, manually operated butterfly valves	Isolates the blower
Aeration Control Valves	05-VAL-310 05-VAL-320	2	8-inch, motorized butterfly valves	Controls volume of aeration air to aeration tanks
Blower Room Exhaust Fan	05-EF-001	1	1,484 cfm, Centrifugal Sidewall Exhauster	Removes air from blower building to prevent buildup of heat
Major Instruments				
Air Flowmeters	05-FIT-310 05-FIT-320	2	0 to 2,000 scfm, thermal mass meters	Measures the total airflow to Aeration Tanks 1 and 2
Air Header Pressure Transmitter	05-PIT-300	1	0 to 20 psig, pressure transmitter	Output used to control blower operation

Table 4.5	**Component/Equipment Listings DVI New Wastewater Treatment Plant California Department of Corrections and Rehabilitation**			
Name	**Tag No(s).**	**Qty.**	**Characteristics**	**Function/Purpose**
Membrane Blowers	06-BLO-410 06-BLO-420 06-BLO-430	3	Rotary lobe positive displacement blowers with VFDs	Supplies aeration air to the membrane tanks
Major Instruments				
Air Flowmeter	05-FIT-410	1	0 to 2,000 scfm, thermal mass meters	Measures the total airflow to Membrane System
Air Header Pressure Transmitter	05-PIT-400	1	0 to 20 psig, pressure transmitter	Output used to control blower operation

4.4 COMPONENT DESCRIPTION

4.4.1 Aeration Tank Splitter Box and Weir Gates

Screened influent enters the aeration tanks from the headworks via the influent flow splitter box. The splitter box serves two purposes: (1) to provide a complete mix of influent flow and RAS and (2) to regulate flow to the two aeration tanks. Flow to each aeration tank is controlled by two 48-inch by 30-inch weir gates (03-GAT-100 to Aeration Tank 1 and 03-GAT-200 to Aeration Tank 2). A third weir gate (03-GAT-300) is located in the splitter box that controls flow to the Sludge Storage Tank (SST) if it is converted to a third aeration tank in the future; this weir gate is normally closed. These gates should be set in a manner that will distribute the flow equally to both aeration tanks. The three weir gates are operated manually (open/close) by use of manual crank operators.

4.4.2 Aeration Tanks

The activated sludge system at DVI New WWTP has two aeration tanks each sized at 236,000 gallons. The sludge holding tank may be converted to a third aeration tank if expansion of the treatment plant is needed in the future. Using baffle walls, each tank is divided into three zones to (1) improve plug flow characteristics, (2) promote the automatic selection of better-settling microorganisms in the ML, and (3) optimize ammonia removal.

The wastewater flow enters the aeration tank from the splitter box. The splitter box discharges into the first anoxic zone (i.e., Zone 1), where the wastewater is immediately completely mixed using a submerged mixer (03-MIX-110 for Aeration Tank 1 and 03-MIX-210 for Aeration Tank 2). To allow for uniform quality ML, submerged mixers are also installed in the second anoxic zone (03-MIX-120 for Aeration Tank 1 and 03-MIX-220 for Aeration Tank 2). After the second anoxic zone (i.e., Zone 2), the wastewater flows underneath and over the concrete baffle wall into the aerobic zone. Within the aerobic zone (i.e., Zone 3), fine bubble membrane diffusers serve to provide an aerobic environment needed by the microorganisms for biological assimilation of organics, as well as sufficient mixing to oxidize organics and keep the ML in suspension. In the aerobic zone, varying levels of aeration is provided based on the estimated oxygen requirements to facilitate biochemical oxygen demand (BOD) removal and nitrification. After the aerobic zone, the ML flows over a weir wall to the membrane wet well. The weir wall is designed to prevent water from cascading directly over the submersible pumps, located towards the center of the wet well. Figure 4.1 illustrates the bottom plan for Aeration Tanks 1 and 2 including the associated equipment and piping. Similarly, Figure 4.2 illustrates the top plan for Aeration Tanks 1 and 2 including the associated equipment and piping. Figure 4.3 shows a partial plan and sections for Aeration Tanks 1 and 2. Figure 4.4 shows the sections.

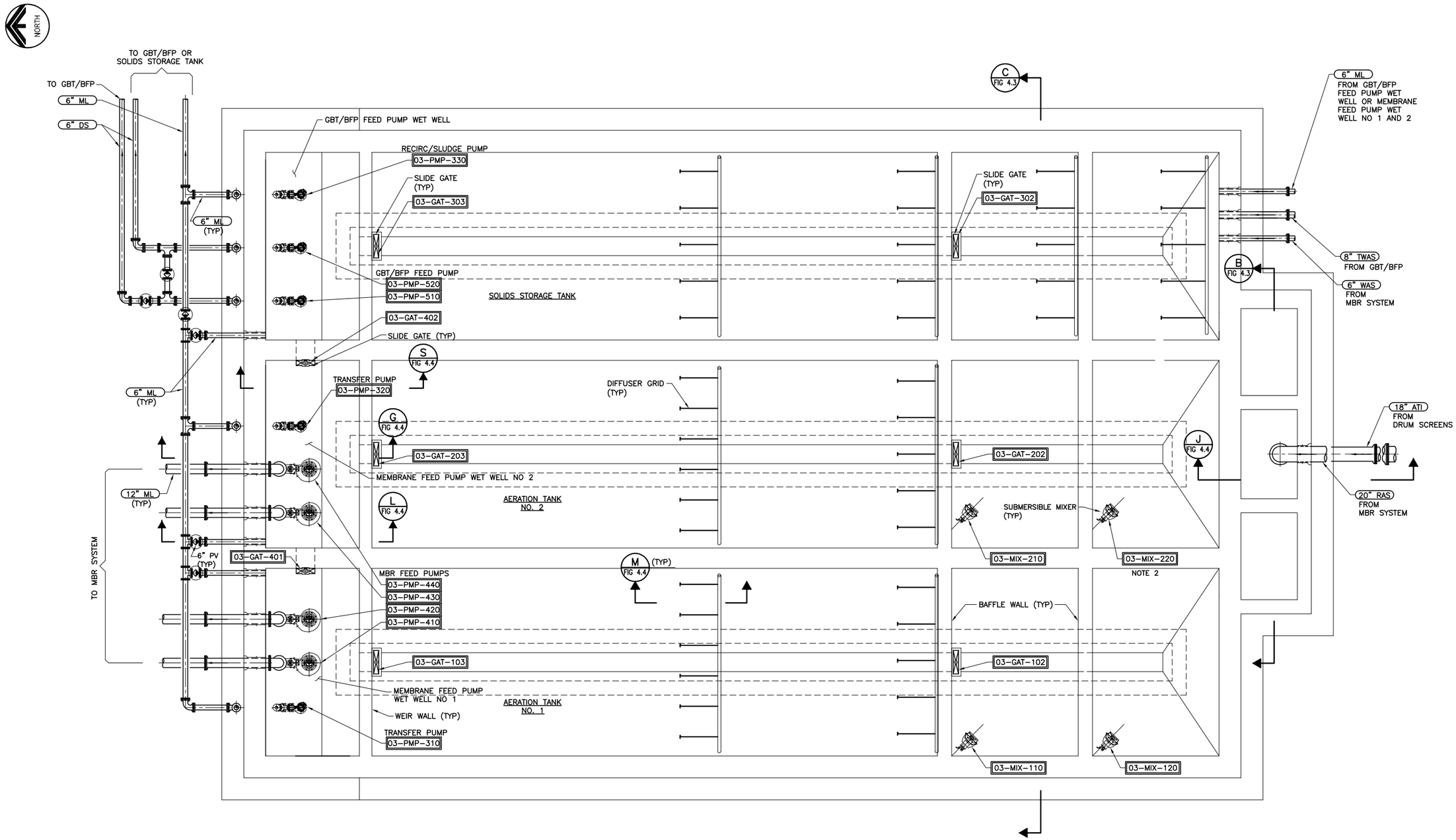

A PLAN – AERATION TANKS–BOTTOM

Figure No. 4.1

AERATION TANKS BOTTOM PLAN VIEW
DEUEL VOCATIONAL INSTITUTION (DVI) NEW WWTP

CALIFORNIA DEPARTMENT OF CORRECTIONS AND REHABILITATION

carollo
Engineers...Working Wonders With Water ™

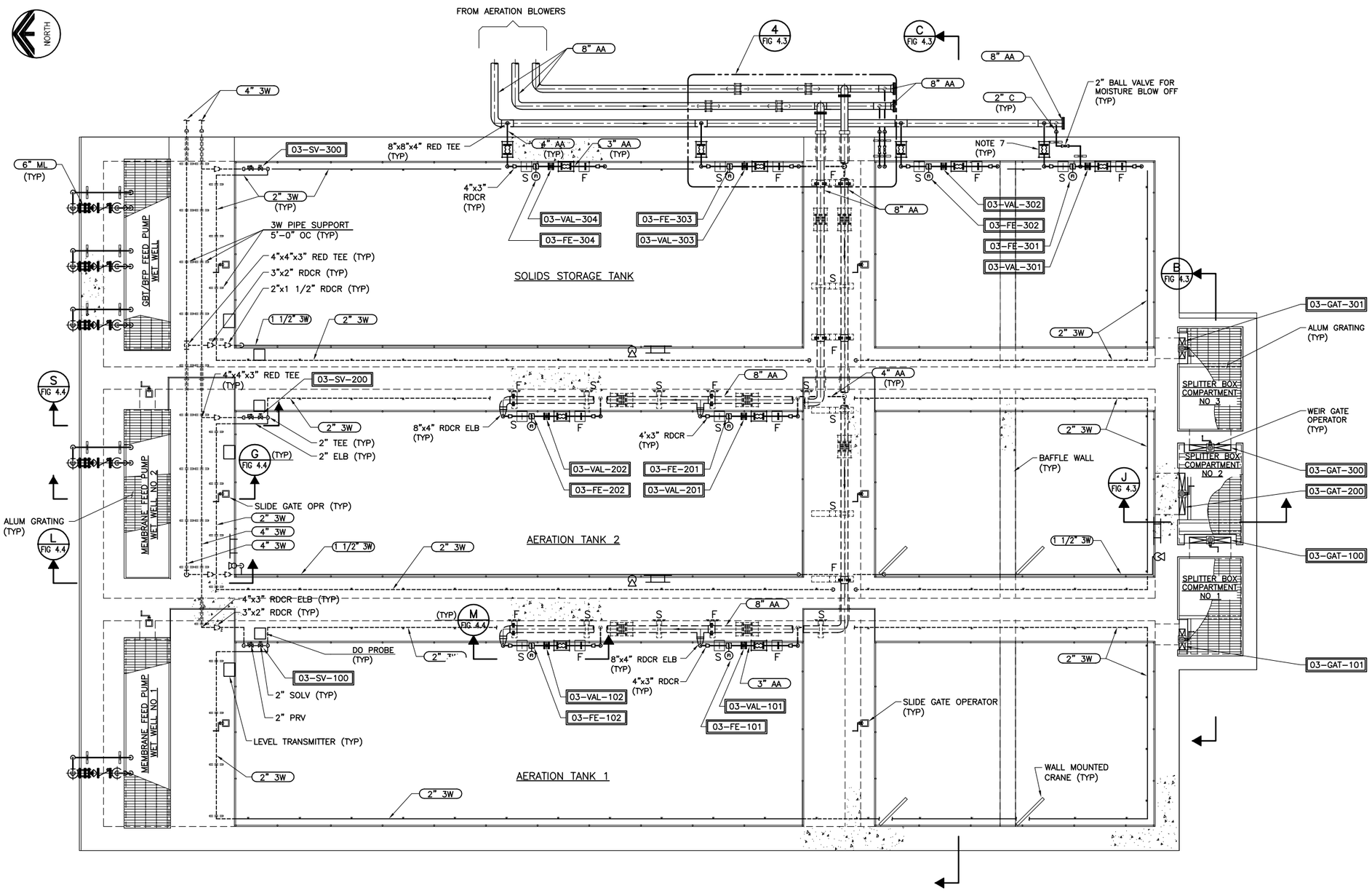

A PLAN – AERATION TANKS–TOP

Figure No. 4.2

AERATION TANKS TOP PLAN VIEW

DEUEL VOCATIONAL INSTITUTION (DVI) NEW WWTP

CALIFORNIA DEPARTMENT OF CORRECTIONS AND REHABILITATION

carollo

Engineers...Working Wonders With Water ™

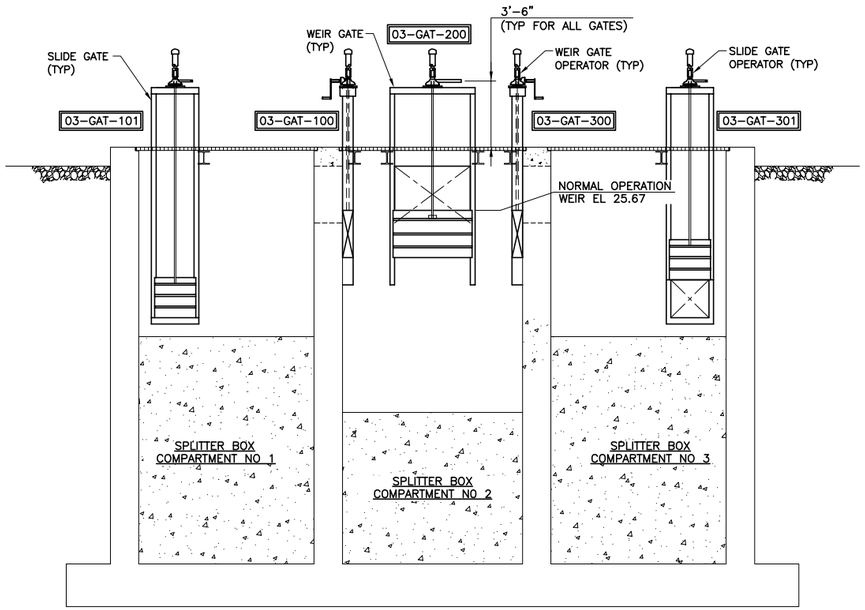

B FIG 4.1 B FIG 4.2 SECTION

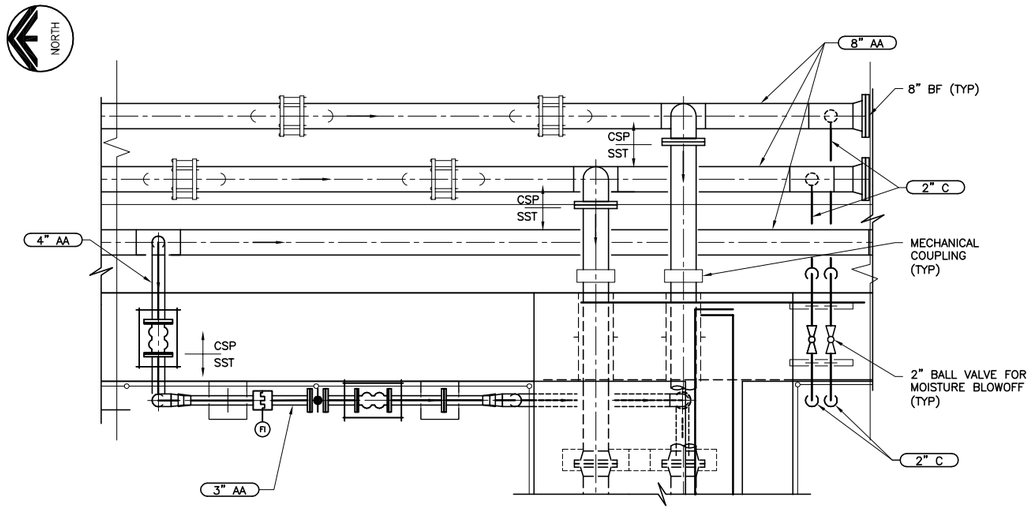

4 FIG 4.2 PARTIAL PLAN

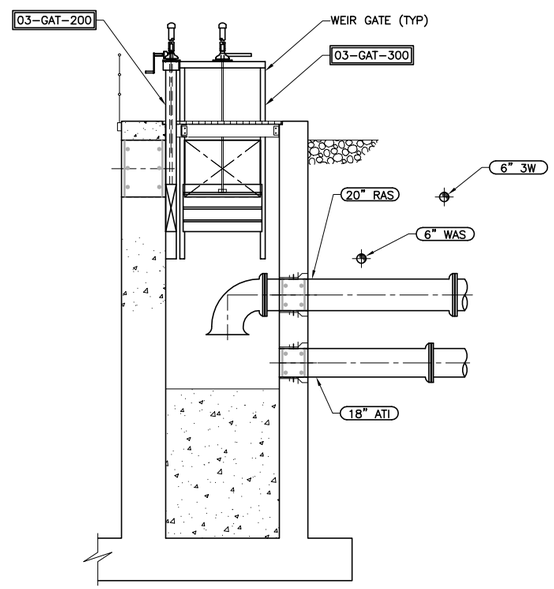

J FIG 4.1 J FIG 4.2 SECTION

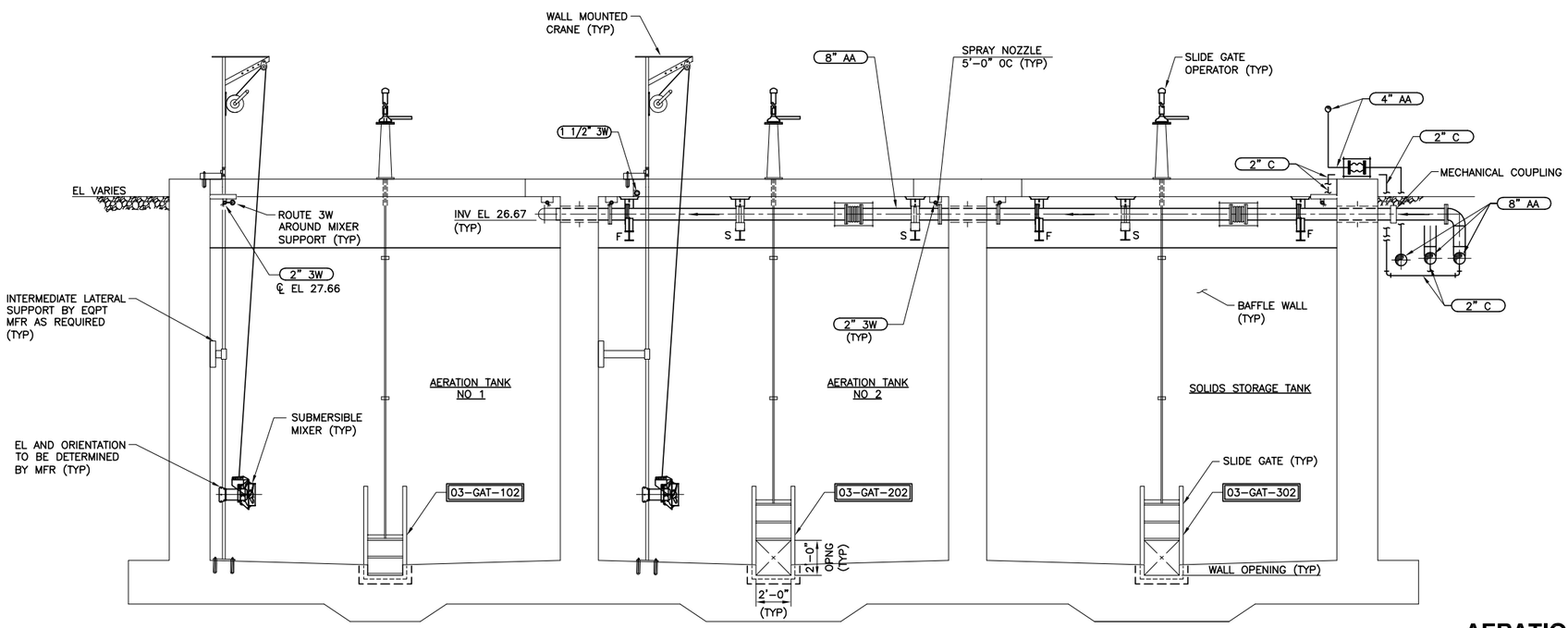

C FIG 4.1 C FIG 4.2 SECTION

Figure No. 4.3

AERATION TANKS PARTIAL PLAN AND SECTIONS
DEUEL VOCATIONAL INSTITUTION (DVI) NEW WWTP

CALIFORNIA DEPARTMENT OF CORRECTIONS AND REHABILITATION

carollo
Engineers...Working Wonders With Water ™

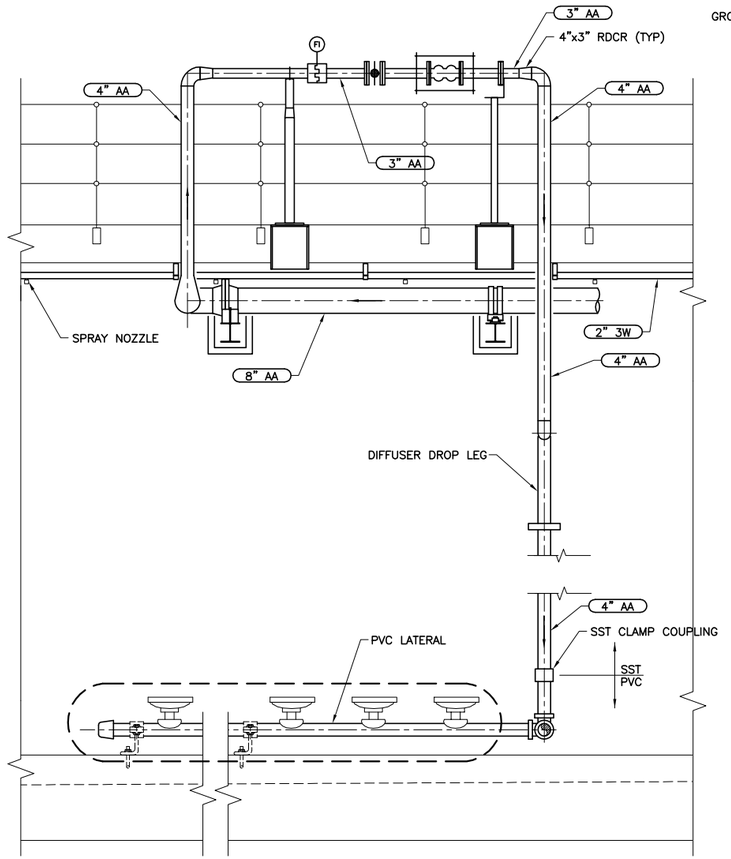

M FIG 4.1 M FIG 4.2 SECTION

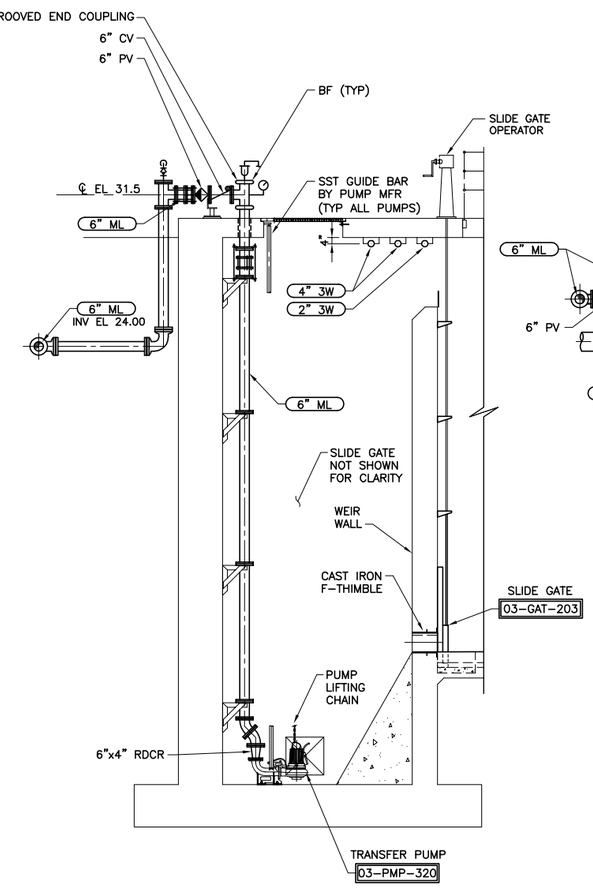

G FIG 4.1 G FIG 4.2 SECTION

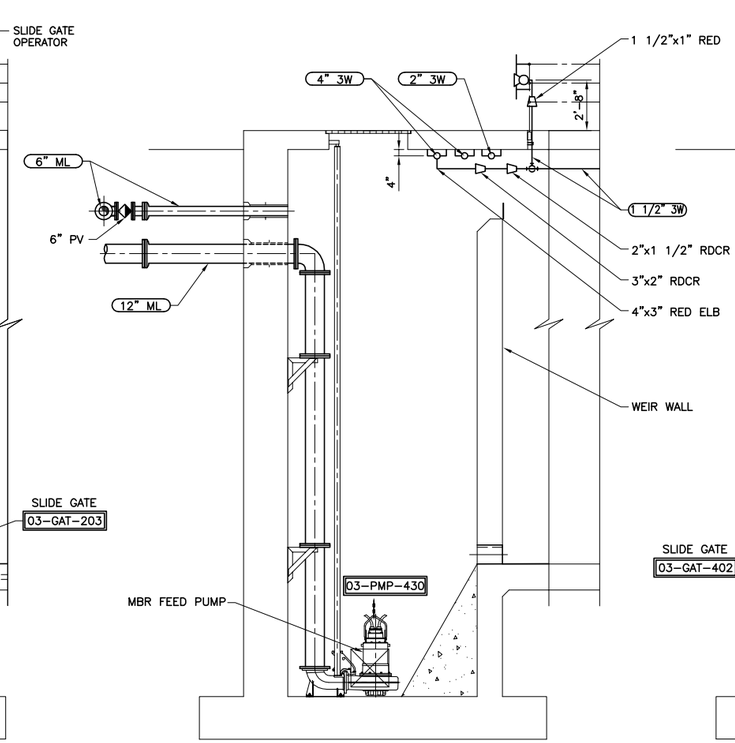

L FIG 4.1 L FIG 4.2 SECTION

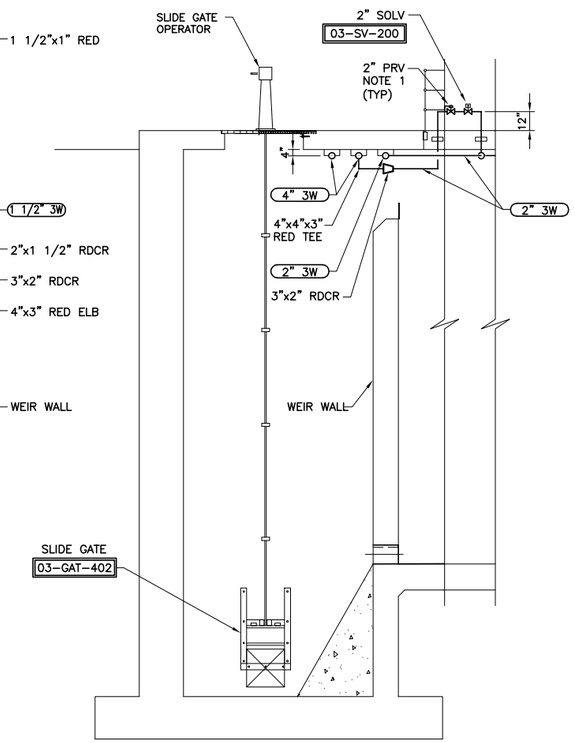

S FIG 4.1 S FIG 4.2 SECTION

Figure No. 4.4

AERATION TANKS SECTIONS

DEUEL VOCATIONAL INSTITUTION (DVI) NEW WWTP

CALIFORNIA DEPARTMENT OF CORRECTIONS AND REHABILITATION

carollo

Engineers...Working Wonders With Water ™

Each aeration tank is installed with one DO analyzer in the aeration zone to provide continuous DO measurements (03-AIT-101 for Aeration Tank 1, Zone 3 and 03-AIT-201 for Aeration Tank 2, Zone 3). The DO analyzers have been installed to provide the operator with a better understanding of the oxygen utilization as flow progresses through the plug flow tank.

4.4.2.1 Baffle Walls

A 12-inch open square penetration is located at the bottom of each of the baffle walls in the aeration tank to allow draining of settled solids to a single location from each tank. Additionally, the baffle wall between the second anoxic zone and aerobic zone contains a 24-inch by 24-inch manually operated slide gate at the bottom (03-GAT-102 for Aeration Tank 1 and 03-GAT-202 for Aeration Tank 2); refer to Figures 4.1 and 4.3. The purpose of the sluice gates is to prevent backflow of wastewater from the aeration zone to the anoxic zone, which adversely affects the biological treatment process. Depending on the hydraulic conditions, the operators may adjust the sluice gates to allow more or less flow over the top of the baffle wall and through the sluice gate mounted at the bottom of the baffle wall. The sluice gates are operated manually (open/close) by use of manual crank operators.

4.4.2.2 Foam Control System

Spray nozzles are located along the perimeter walls above the water surface of each aeration tank to suppress foam commonly associated with the aeration process; refer Figure 4.2. Under normal conditions, foam will tend to accumulate next to the walls. If *Nocardia* has developed, or if the plant experiences a large volume of surfactants entering the plant, the foam will spread across the surface of the tank and begin to build up. The spray nozzles can help knock down the foam and keep it in solution in the aeration tank. If there are no foaming problems, the sprayers may be turned off.

The foam spray nozzles are supplied with plant water (3W) through a 4-inch pipe and pressure-reducing valve. The pressure-reducing valve should be set at approximately 20 pounds per square inch (psi) to ensure proper operation of the nozzles. Downstream of the pressure-reducing valve, the flow splits to each tank through 3-inch pipes and a solenoid control valve.

The individual spray nozzles cannot be isolated for maintenance; rather, the nozzles are designed to be cleaned by flipping the counterweight up and allowing a stream discharge to remove any accumulated sediments. The configuration of the walkways of Aeration Tank 1 and 2 allow the nozzles to be reached easily with a hook over the handrail. The nozzles should be purged periodically to maintain proper operation.

4.4.2.2.1 *Foam Control Sprayers Controls*

The foam control sprayers are turned on and off using the solenoid valve that is controlled from the supervisory control and data acquisition (SCADA) system. The foam control

sprayers are only manually controlled from the operator interface system (OIS) by selecting OPEN or CLOSE. The operator may choose the duration to spray a single tank. Experience has indicated that ten minutes of spray in a 30-minute interval is sufficient for foam abatement. The OIS displays solenoid valve output signal.

4.4.2.3 Aeration Tank Drainage

Weir and sluice gates enable each aeration tank to be isolated and independently drained. The influent splitter box feeds both Aeration Tank 1 and 2; however, before entering Aeration Tank 1 the influent wastewater travels through a 20-inch line. At the end of the line is a 24-inch by 24-inch slide gate (03-GAT-101). The operators may manually close the sluice gate when draining Aeration Tank 1 or performing maintenance on the influent splitter box. For Aeration Tank 2, the weir gate (03-GAT-200) located in the splitter box isolates the tank for draining.

The construction of the aeration tanks creates a drainage system that lends to easily draining the tanks for maintenance and repair. The entire length of each aeration tank floor is sloped from the east and the west towards a one-foot wide, one-foot deep central trench. This longitudinal drain is sloped over entire length of the tank towards the membrane wet well. Additionally, the bottoms of the baffle walls were designed with 12-inch open square penetrations to allow settled solids to drain to the membrane wet well. Likewise, the membrane wet well weir walls are designed with 24-inch by 24-inch manually operated sluice gates at the bottom (03-GAT-103 for Aeration Tank 1 and 03-GAT-203 for Aeration Tank 2), which are opened when draining the tanks.

Drained solids in the membrane wet well maybe transferred to an operational aeration tank via transfer pumps located in the membrane wet well. One non-clog submersible constant speed transfer pump (03-PMP-310 and 03-PMP-320) is installed in each membrane wet well compartment; refer to Figure 4.1. The transfer pumps are used to transfer ML or drained solids to an operational aeration tank or membrane wet well when draining a process tank or membrane wet well for maintenance. The piping of the transfer pumps is designed to transfer the ML or drained solids to the membrane wet well, aeration tank, or SST by manually adjusting the valves on the discharge headers of the pumps.

4.4.2.3.1 *Transfer Pump Controls*

The transfer pumps (03-PMP-310 and 03-PMP-320) can be controlled by the programmable logic controller (PLC), through the supervisory control and data acquisition (SCADA) system, or locally using START/LOCKOUT/STOP/RESET pushbuttons and LOCAL-OFF-REMOTE (L-O-R) selector switch at motor control center (MCC)-P1, which is located in the Blower/Electrical Building. The operational status and alarms of the transfer pump is displayed at the SCADA system.

1. With the L-O-R selector switch at MCC-P1 in the **LOCAL** position, the transfer pump is controlled manually by the operator using the **START/STOP** pushbuttons.

2. With the L-O-R selector switch at MCC-P1 in the **OFF** position, the transfer pump is prohibited from running.
3. With the L-O-R selector switch at MCC-P1 in the **REMOTE** position, the transfer pump is controlled through the PLC:
    a. With the HAND-OFF-AUTO selector switch at the pop-up window in the **HAND** position, the selected transfer pump is controlled manually by the operator using the **START/STOP** selector.
    b. With the HAND-OFF-AUTO selector switch at the pop-up window in the **OFF** position, the selected transfer pump is prohibited from running.
    c. With the HAND-OFF-AUTO selector switch at the pop-up window in the **AUTO** position, the selected transfer pump is controlled by the PLC.

Normal operation for the transfer pumps is REMOTE-AUTO control mode. In REMOTE-AUTO control mode, the operation of the transfer pumps is controlled by a pre-set timer for START/STOP.

4.4.3 Anoxic System for Aeration Tanks

The two zones at the head end of Aeration Tanks 1 and 2 allow for anoxic selection of microorganisms. It has been determined that when wastewater is combined with RAS and kept in suspension in the absence of oxygen, microorganisms which are beneficial to the activated sludge process are capable of collecting and storing the influent substrate (food), while those that are generally linked to process upset conditions are not well suited for this type of environment will have a difficult time surviving. Specifically, bacteria of the *Nocardia* species and bacteria that cause bulking are generally referred to as “filamentous” organisms. These organisms are classified by their long, thin “hairlike” shape. Their cell structure requires a continuous source of substrate and oxygen for survival and reproduction. It is thought that due to their high surface area to mass ratio, they can successfully compete with beneficial microorganisms in conditions where sufficient oxygen is available and low levels of substrate are present. Conversely, beneficial microorganisms have the ability to absorb substrate when insufficient oxygen is available then process it in the presence of oxygen. The anoxic selectors allow for this phenomenon to occur.

Anoxic selection provides the additional benefit of utilizing the nitrate present in the RAS in lieu of oxygen for oxidation of a portion of the influent substrate. This type of oxidation step is generally referred to as denitrification. The denitrification process also returns alkalinity to the process stream consumed within the aerated nitrification process.

Generally, when the nitrate concentration in the ML effluent from a compartment is less than 1 milligram per liter (mg/L), the anoxic process is complete and subsequent compartments are therefore anaerobic. The DO in the anoxic zone should be held at less than 0.1 mg/L.

4.4.3.1 Anoxic Mechanical Mixers

Four submersible, constant speed electric mixers with reduction gearboxes are utilized in the aeration tank anoxic Zones 1 and 2 (two per aeration tank, one per zone). The mixers are constructed of stainless steel. Each mixer is supported on a guide rail assembly and may be raised and lowered by a small portable winch at the top of the tanks. The mixers help maintain a homogeneous blend of microorganisms and food (i.e., influent wastewater) in these un-aerated zones. Additionally, the mixing application generates abundant turbulence to maintain solids suspension and circulation. Mixing is maintained in latter zones by the air bubbling up from the diffusers. Photo 4.1 shows the Anoxic Mixer at Aeration Basin No. 2.

Mixers are comprised with the following equipment:

- Aeration Tank 1 Zone 1 Anoxic Mixer (03-MIX-110)
- Aeration Tank 1 Zone 2 Anoxic Mixer (03-MIX-120)
- Aeration Tank 2 Zone 1 Anoxic Mixer (03-MIX-210)
- Aeration Tank 2 Zone 2 Anoxic Mixer (03-MIX-220)

4.4.3.1.1 *Anoxic Mechanical Mixer Controls*

The anoxic mixers (03-MIX-110, 03-MIX-120, 03-MIX-210, and 03-MIX-120) can be controlled by the PLC, through the SCADA system, or locally using START/LOCKOUT/STOP/RESET pushbuttons and the L-O-R selector switch at MCC-P1, which is located in the Blower/Electrical Building. The operational status and alarms of each mixer is displayed at the SCADA system.

1. With the L-O-R selector switch at MCC-P1 in the **LOCAL** position, the selected mixer is controlled manually by the operator using the **START/STOP** pushbuttons.
2. With the L-O-R selector switch at MCC-P1 in the **OFF** position, the selected mixer is prohibited from running.
3. With the L-O-R selector switch at MCC-P1 in the **REMOTE** position, the selected mixer is controlled through the PLC:
    a. With the HAND-OFF-AUTO selector switch at the pop-up window in the **HAND** position, the selected mixer is controlled manually by the operator using the **START/STOP** selector switch.
    b. With the HAND-OFF-AUTO selector switch at the pop-up window in the **OFF** position, the selected mixer is prohibited from running.
    c. With the HAND-OFF-AUTO selector switch at the pop-up window in the **AUTO** position, the selected mixer is controlled by the PLC.

Normal operation for the anoxic mixers is REMOTE-AUTO control mode. In REMOTE-AUTO control mode, the mixers run continuously. The operational status and alarms of each mixer is displayed at the OIS.

Anoxic Mixer

PHOTO 4.1

California Department of Corrections
and Rehabilitation
Deuel Vocational Institution Wastewater Treatment Plant
Operations and Maintenance Manual

H:\Client\CDC SAC\6927\6927R11 - DVI - DD and CD Phase\O&M Manual\O&MManualPhotos\WordFiles\PhotoNo4.1.doc

carollo
Engineers...Working Wonders With Water®

4.4.4 Aeration System for Aeration Tanks

The air system for the activated sludge system consists of aeration air distributed throughout the aerobic zones of the aeration tank to provide the oxygen required for the activated sludge biological process and to prevent solids from settling. Different levels of aeration have been provided in the different zones based on the flow path and estimated oxygen requirement.

The aerobic zones of each tank include fine bubble membrane disc diffusers. Up to 1,196 standard cubic feet per minute (scfm) of total aeration air is provided to the aerobic zones of the aeration tanks from two headers using two positive displacement blowers, with a third serving as a standby blower.

4.4.4.1 Aerobic Zones

The aerobic zone of the aeration basins begins at the point where the ML comes in contact with the fine bubbles from the air diffusion equipment. The increased DO concentrations from aeration bubbles supply the bacteria with oxygen. The oxygen allows the bacteria to metabolize the influent substrate. The bacteria convert the organic material and available oxygen to new cells or use the energy for cell maintenance.

An oxygen deficiency, or sag, can occur at the front of the aerobic zone due to the available substrate and oxygen demand of the ML organisms. The sag is the result of the ML organisms demanding oxygen while they oxidize the soluble BOD_5 present in the ML and stored from anoxic uptake process (if applicable). The first aeration grid in service will always require the most air per square foot of tank floor to satisfy the DO sag caused by the bacteria consuming the available wastewater substrate. Without proper balancing of the flow through the drop legs, the effluent end of the tank is typically over-aerated, wasting electricity and operational funds. It is important for the operations staff to actively manage the air flow distribution along the tank. DO sampling for process control should occur at approximately the same place, time, and flow rate to ensure the values are representative. Inconsistent sampling could cause false readings and poor process control decisions. Operate the process to maintain approximately two mg/L of DO throughout the aerated zones of the tank. This will supply enough oxygen to ensure a good BOD_5 reduction and nitrification for low effluent ammonia concentrations.

4.4.4.2 Diffuser System for Aeration Tanks

The air diffusion devices utilized at DVI New WWTP are nine-inch circular membrane fine bubble diffusers. The large number of small bubbles produced by the diffusers increases the surface area between air and the ML, thereby providing high oxygen transfer efficiency. The fine bubble diffusers are distributed across the tank floor along PVC pipe laterals. Each lateral is connected to a manifold and drop leg. One-drop leg, manifold, and connected laterals and diffusers are termed an aeration grid. There are two aeration grids located in

the aerobic zone (i.e., Zone 3) of each aeration tank. Each aeration grid has different diffuser densities and overall dimensions; designed to deliver air at a rate complimentary to the dissolved oxygen uptake. Table 4.6 shows the aeration zone, aeration grid, and corresponding number of diffusers with minimum and maximum airflows.

Table 4.6 Diffuser System for Aeration Tanks
DVI New Wastewater Treatment Plant
California Department of Corrections and Rehabilitation

Tank	Zone	Zone #	Diffusers (No.)	Minimum Airflow (scfm)	Maximum Airflow (scfm)
Aeration Tank 1	3	3	209	106	307
		4	198	101	291
Aeration Tank 2	3	3	209	106	307
		4	198	101	291

Notes:
1. For Aeration Tanks 1 and 2 - Zones 1 and 2 are anoxic zones and do not have diffusers.

Air is supplied to the aeration grids in Aeration Tank 1 and 2 through dedicated headers for each tank. The 8-inch headers originate from the main 12-inch aeration air header from the aeration blowers. The headers travel underground to the east side of the SST and run along the east face of the tank. The headers run a short vertical distance on the exterior wall of the SST and penetrate the east wall of the tank. Once entering the tank, the headers run suspended under the walkways.

Each eight-inch header is equipped with a two-inch condensate pipe and valve. The condensate pipe connects to the aeration headers at their lowest elevation and before entering the structure. For accessibility, the condensate pipe and valve run on top of the east wall of the SST. When the condensate valve is opened, it will remove the moisture that has accumulated in the header. Moisture can accumulate from condensation or seepage from the air basin if the aeration blowers shutdown. Open the condensate valves weekly to ensure liquid in the aeration header is not a problem. If air to an aeration tank is shutdown for more than an hour, bring the aeration grids back online slowly to ensure diffusers are not damaged. Also, open the condensate valves before restarting the aeration blowers. The most common way to damage an aeration grid is if air is shutdown and condensate is in the system. When the air returns water is forced through the diffusers and the buildup in pressure causes the diffusers to rupture.

If the aeration tank is to be taken out of service, continue aeration until the tank is drained to an elevation just above the diffusers. Operation of the diffuser membranes without liquid coverage can cause damage, leading to premature failure. After an aeration tank is drained, the diffuser membranes should be rinsed off while debris in the tank is hosed to the drain trench. Hose down the aeration tank walls and diffuser membranes before the tank dries.

If an aeration tank is to be kept out of service, fill the tank with 10 feet of plant water (3W) to protect the diffuser membranes from dropping objects, UV light, and temperature fluctuations. Fill the tank slowly with hoses laid along the sidewall of the tanks and the foam control sprays so that a large free fall of water will not damage the aeration laterals or diffuser membranes.

Caution should be exercised when draining an aeration tank with air still going through diffusers. As the level in the tank lowers, there will be increased airflow through the diffusers due to lessened head in the tank. The operator will need to throttle the air grid isolation valves (please refer to Section 4.4.4.4, Air Flow Butterfly Valves) to lower the airflow to the grid and to maintain system pressure.

For specific care and maintenance instructions of the diffuser membranes, consult the manufacturer's O&M manual.

4.4.4.3 Air Flow Monitoring

Aeration air delivery to each grid through the drop leg is monitored by the averaging pitot tube mounted on the horizontal pipe segment of the drop leg located above the handrail. The pitot is an instrument that uses pressure to measure the airflow through a pipe. A portable airflow sensor may be plugged into the pitot tube assembly to manually measure the airflow rate. The pitot tube and corresponding grid is has follows:

- Aeration Tank 1 Aeration Grid 1 (03-FI-101)
- Aeration Tank 1 Aeration Grid 2 (03-FI-102)
- Aeration Tank 2 Aeration Grid 1 (03-FI-201)
- Aeration Tank 2 Aeration Grid 2 (03-FI-202)

4.4.4.4 Air Flow Butterfly Valves

Downstream of the pitot tube is a manual butterfly valve, which controls the delivery of aeration air to each aeration grid. The butterfly valve is installed in the horizontal pipe segment of the drop leg located above the handrail. The butterfly valve and corresponding aeration grid is as follows:

- Aeration Tank 1 Aeration Grid 1 (03-VAL-101)
- Aeration Tank 1 Aeration Grid 2 (03-VAL-102)
- Aeration Tank 2 Aeration Grid 1 (03-VAL-201)
- Aeration Tank 2 Aeration Grid 2 (03-VAL-202)

The butterfly valve is throttled as required to supply and balance the airflow to meet the target DO concentration of each aeration zone. To ensure the correct amount of airflow is being delivered to each aeration grid, the airflow rate may be measured by a portable airflow meter (please refer to section 4.4.4.3, Air Flow Monitoring). Care must be exercised

in balancing airflow between grids to meet process demands. Excessive throttling of any of the butterfly valves will limit the system capacity and increase the working pressure of the aeration header, and can cause an imbalance in airflow between tanks.

4.4.4.5 Dissolved Oxygen Monitors

The DO analyzers are installed (one in each tank) near the effluent weirs to measure the DO in its respective tank.

- Aeration Tank 1 Zone 3 (03-AIT-101)
- Aeration Tank 2 Zone 3 (03-AIT-201)

The DO analyzers provide continuous DO measurements; assisting the operators with a better understanding of the oxygen utilization as flow progresses through the plug flow tank. The aeration air should be distributed through the aeration grid drop legs and control valves in a manner so that at the daily average flow and load, the measurement at each DO analyzer is roughly equivalent. As the influent progresses through the daily variations in flow and load, the DO analyzers may read somewhat differently, depending on organic uptake. To ensure that adequate DO is being supplied, the DO can be controlled based on an average DO analyzer reading, or on minimum DO. As DO levels drop due to increased oxygen demand, the volume of air supplied through the modulating butterfly valves increases. The opposite occurs during declining oxygen demand.

4.4.4.6 Air Flowmeters

Total airflow to each aeration tank is measured by thermal mass flowmeters. As mentioned earlier, the tanks are each served by eight-inch air headers originating from the aeration blowers. The flowmeters are located on each of the eight-inch air headers feeding the aeration tanks from the Blower/Electrical Building.

- Aeration Tank 1 (05-FIT-310)
- Aeration Tank 2 (05-FIT-320)

The air flowmeters are thermal insertion type with platinum Resistance Temperature Detectors. The flow rate as well the process temperature is displayed. The operating pressure range for the instrument varies from 0 to 250 psig. For additional information on the flowmeters, refer to the manufacturer's O&M manual.

4.4.4.7 Aeration Control Valves

An aeration control valve controls the total airflow to each aeration tank. Each tank has one motorized eight-inch aeration control valve, which discharges into an eight-inch header that supplies air to the drop legs of the aeration tanks. Additionally, the aeration grids in each tank have manual butterfly valves to adjust the percentage of the total tank airflow that can be directed to each grid. Detailed information on the manual butterfly valves is presented in

the Section 4.4.4.4 Air Flow Butterfly Valves. The following is the process tank and corresponding motorized aeration control valve:

- Aeration Tank 1 (05-VAL-310)
- Aeration Tank 2 (05-VAL-320)

The airflow to the aeration tanks is controlled by the position of the aeration control valve, which is adjusted via the SCADA System.

4.4.4.7.1 *Aeration System Controls*

The aeration system consists of the air from the aeration blowers, aeration control valves, air flow meters, DO analyzers, and a PLC in the SCADA system. These components of the aeration system are described in detail in the prior sections, with the exception of the aeration blowers, which is described in the following section. Additionally, the aeration system controls also apply to the SST aeration system. For more information regarding the aeration system of the SST, please refer to Chapter 8, Section 8.4.2, Aeration System for the SST.

Air to each aeration tank is controlled via an eight-inch butterfly valve. The air supplied to each aeration tank is controlled by independent control loops utilizing PLCs. Normally, airflow to each tank is controlled by one of two modes: (1) DO mode or (2) flow mode. In flow mode, the aeration control valve is modulated based on how much the airflow reordered via the air flow meter deviates from an operator entered flow setpoint for each tank. In DO mode, the flow setpoint is adjusted via SCADA system to maintain an operator entered DO setpoint for each tank.

The airflow to the tanks may be controlled locally (i.e., manually). Each aeration control valve has an L-O-R selector switch and an OPEN/CLOSE switch mounted on the valve actuator. In the LOCAL mode, airflow valve operation is controlled manually at the valve by using the OPEN/CLOSE pushbuttons. Once set, the control valve will stay in this position until a new position command is entered, the valve is put into an automatic control mode.

The airflow to the aeration tanks may also be controlled remotely. The aeration control valves have REMOTE-HAND and REMOTE-AUTO capabilities. The airflow control valves are designed for throttling and receive a percent open signal from the PLC. In REMOTE-HAND, the operator sets the valve position at the OIS. Visual indication of the position of each valve (Open/Closed or position) is provided at the OIS.

In REMOTE-AUTO the valves are controlled via the SCADA system. As mentioned previously, in REMOTE-AUTO the aeration system may be run in one of the following two modes: (1) flow mode and (2) DO mode.

In flow mode, the operator may enter a flow setpoint for an individual tank. The SCADA system shall then compare the flow setpoint to the flow rate measured via the air flow meter and modulate the aeration control valve position to maintain a constant airflow rate. Flow

setpoints for each tank may be operator adjustable within the minimum to maximum flow values (i.e., 207 scfm to 598 scfm). Once initiated, the tank may operate in flow mode until the control mode is changed by an operator or the aeration control valve is put in local control.

In DO mode, the operator may enter a DO setpoint for an individual tank. The SCADA system shall then compare the DO setpoint to the measured DO concentration and modulate the aeration control valve position to maintain a constant DO concentration. For example, if the difference between the measured DO and DO setpoint is greater than the "DO Small Step Deviation" setpoint of 0.1 mg/L (adjustable from 0 to 0.6 mg/L), then the flow setpoint will be adjusted by 150 scfm (adjustable from 0 to 750 scfm). Alternatively, if the difference between the measured DO and DO setpoint is greater than the "DO Large Step Deviation" setpoint of 0.2 mg/L (adjustable from 0 to 0.6 mg/L), then the flow setpoint should be adjusted by 300 scfm (adjustable from 0 to 1,500 scfm). Thus, the flow setpoint should be increased if the measured DO is less than the DO setpoint or decreased if the measured DO is greater than the DO setpoint.

The flow setpoint for each aeration tank's aeration control valve may be adjusted by the SCADA system to maintain the setpoint DO concentration in its respective tank. However, flow setpoint for each aeration control valve as to be adjusted sequentially, starting with the control valve for Aeration Tank 1, followed by Aeration Tank 2 and SST. The time delay between the flow adjustments of each tank in the sequence should be five minutes. The time delay is operator adjustable from 1 to 60 minutes. For example, after the flow setpoint adjustment of the control valve for the SST has been completed and after a time delay of 15 minutes, the sequential adjustment process will repeat, starting with Aeration Tank 1. As in the flow mode, when operating in the DO mode the flow setpoint of the aeration control valve may not be adjusted to a value lower or higher than the minimum and maximum air flow rates (i.e., 207 scfm to 598 scfm).

The DO setpoint is initially set to 2.0 mg/L and is adjustable from 0.2 to 4.0 mg/L. The measured DO used by the SCADA system is the time-averaged DO value. The time-averaged DO value for each tank is based on 12 equally spaced readings from the selected DO probe(s) over a time span of two minutes. The time is operator adjustable from 1 to 120 minutes.

The flow mode and DO mode selection shall be independent between each of the two aeration tanks and the SST. If the DO in any of the tanks is detected to be outside the operator adjustable setpoint an alarm will be sent to SCADA (i.e., HIGH DO or LOW DO).

4.4.4.8 Aeration Blowers

The aeration air system supplies processed air to the aeration tanks and the SST. The aeration air is supplied to the aeration tanks to provide the oxygen required for the activated sludge biological process and to prevent settlement of solids. For the SST, the aeration air is provided to maintain a mixed, aerobic environment. Three positive displacement blowers

(05-BLO-310, 05-BLO-320, and 05-BLO-330) supply air for the aeration systems of Aeration Tank 1, Aeration Tank 2, and the SST. Air is discharged into a single 12-inch header, which then distributes air to two 8-inch headers for the Aeration Tanks and one 8-inch header for the SST. Figure 4.5 illustrates the plan view for Blower/Electrical Building including the associated equipment and piping. For more information regarding the aeration system of the SST, please refer to Chapter 8, Section 8.4.2, Aeration System for SST. Photo 4.2 shows Aeration Blower No. 3.

The three blowers are located in the Blower/Electrical Building, which is east of the Aeration Tanks. Stainless steel pipelines convey aeration air from the Blower/Electrical Building to the aeration tanks and SST. Aeration air is distributed to the aeration tanks and SST by eight-inch air-header piping, drop-leg piping, and a diffuser system as described in detail in Section 4.4.4.2, Diffuser System for Aeration Tanks and Chapter 8, Section 8.4.2.2, Diffuser System for SST, respectively.

The aeration blowers are rotary lobe positive displacement blowers. Each blower is belt driven by a 60-hp, 1,800-rpm, 3-phase electric motor and has a rated capacity of 1,093 scfm at a discharge pressure of 23 pounds per square inch absolute (psia). Additionally, each aeration blower is provided with a VFD that varies the speed of the blower to maintain header pressure. Normally, two positive displacement blowers are operating while the third blower is serving as a standby blower.

The blower draws outside air into each blower through dedicated suction pipes fitted with an air filter, a suction silencer, and an inlet vacuum gauge (05-PI-311, 05-PI-321, and 05-PI-331). The blower inlet filters provide a two stage filtering process. The first stage is a washable reusable fiber filter that removes most of the dust from the air. This first filter provides 95 percent retention of five micron and larger particles. After extended use the first filter may be washed; however if this filter is allowed to get extremely dirty, it will be difficult to wash and will require replacement. The second stage is a disposable filter designed to remove very small dust particles. Filtering the air before the aeration blowers protects the blower parts from debris. In addition, filtering the air prevents small particles from being lodged in the small perforations of the aeration membrane diffusers.

Blower discharge air passes through a discharge silencer, an outlet pressure gauge (05-PI-312, 05-PI-322, and 05-PI-332), a check valve, and manually operated butterfly valve (05-VAL-312, 05-VAL-322, and 05-VAL-332) to the 12-inch aeration air header. Suction and discharge silencers are provided on the blowers to minimize the noise experienced by the operators in the blower room. The silencers operate similar to a car muffler. Airflow passes though an annular passage lined with acoustically perforated tubes, which are backed by deep layers of sound absorbing fiberglass. This attenuates the noise with a minimum of pressure drop. The suction and discharge silencers should dampen the noise of the

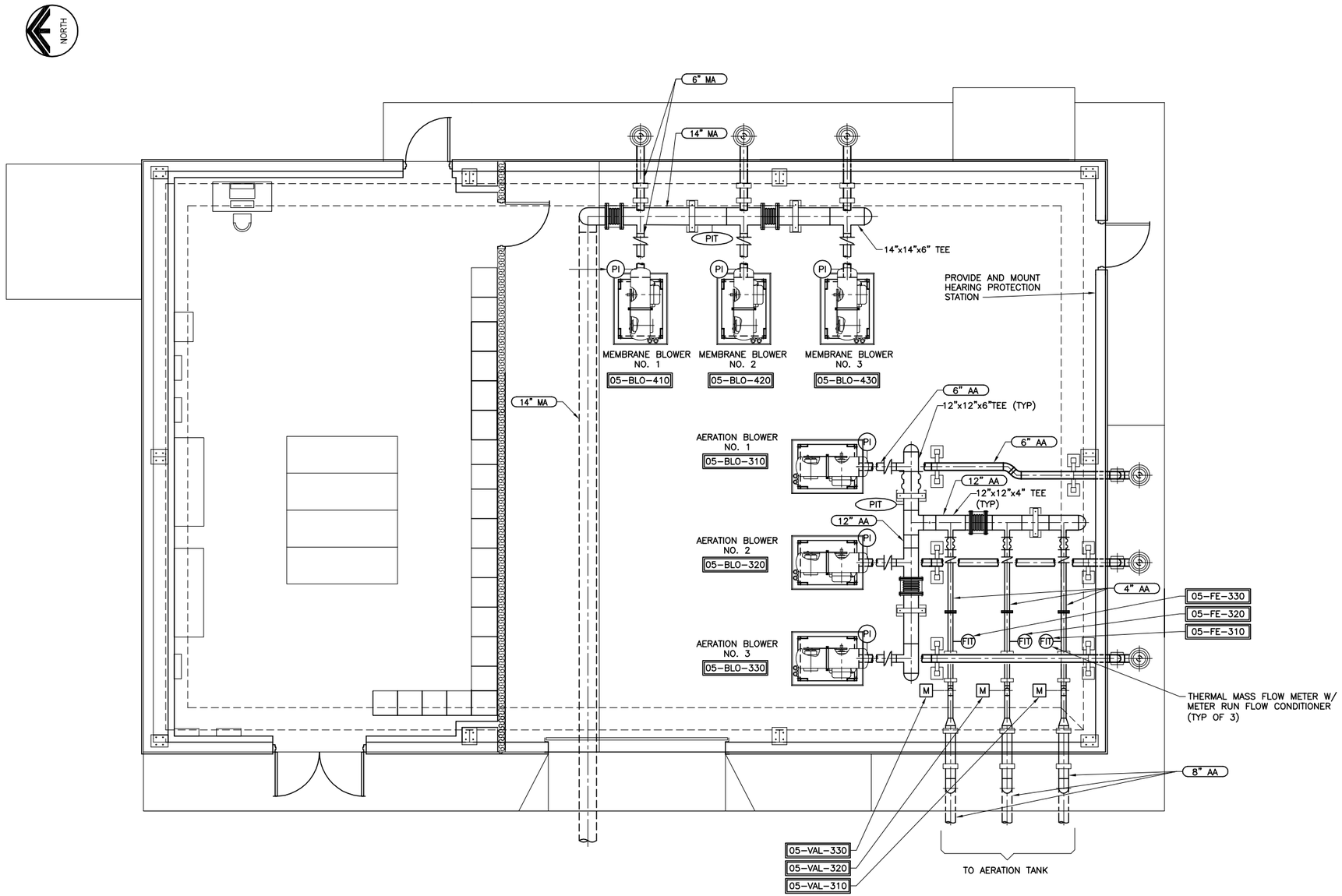

A PLAN – BLOWER/ELECTRICAL BUILDING

Figure No. 4.5

BLOWER/ELECTRICAL BUILDING PLAN VIEW
DEUEL VOCATIONAL INSTITUTION (DVI) NEW WWTP

CALIFORNIA DEPARTMENT OF CORRECTIONS AND REHABILITATION

carollo
Engineers...Working Wonders With Water ™

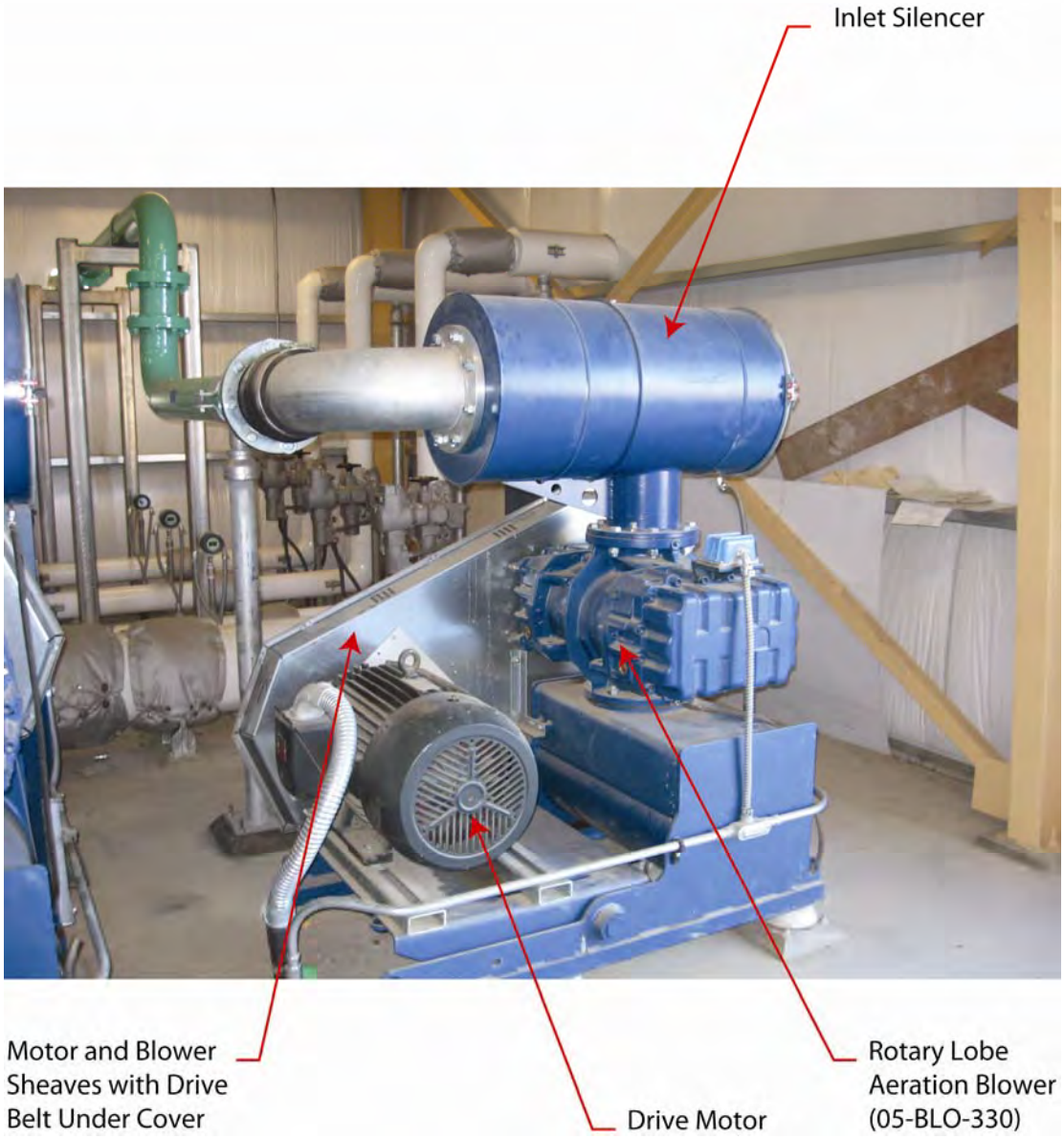

Aeration Blower No. 3

PHOTO 4.2

California Department of Corrections
and Rehabilitation
Deuel Vocational Institution Wastewater Treatment Plant
Operations and Maintenance Manual

carollo
Engineers...Working Wonders With Water®

blowers enough that the occupants of the blower room may not have to wear hearing protection. However, as a precaution, heavy protection maybe used.

Also, located on the 12-inch common air header is a pressure transmitter (05-PIT-300) to monitor the discharge pressure. The pressure transmitter in the 12-inch common header is used for the control loop that runs the aeration blowers on a pre-selected set pressure. With the pressure reading from the transmitter, the control loop utilizes a PLC to operate the three aeration blowers. The aeration blowers are in a lead/lag/standby configuration.

4.4.4.8.1 *Aeration Blower Controls*

Each aeration blower (05-BLO-310, 05-BLO-320, and 05-BLO-330) has START/LOCKOUT/STOP/RESET pushbuttons and L-O-R) selector switch at MCC-P1, which is located in the Blower/Electrical Building. Also located at the MCC-P2 is the VFD for each blower, which consists of a manual speed potentiometer that can be used to locally adjust the speed of the blower. A photo of Aeration Blower No. 3 MCC is shown in Photo 4.3.

1. With the L-O-R selector switch at MCC-P1 in the **LOCAL** position, the aeration blower is controlled manually by the operator using the **START/STOP** pushbuttons and **SPEED** potentiometer.
2. With the L-O-R selector switch at MCC-P1 in the **OFF** position, the aeration blower is prohibited from running.
3. With the L-O-R selector switch at MCC-P1 in the **AUTO** position, the aeration blower is controlled through the PLC:
    a. With the HAND-OFF-AUTO selector switch at the pop-up window in the **HAND** position, the selected blower is controlled manually by the operator using the **START/STOP** pushbuttons and entering a **SPEED** setpoint.
    b. With the HAND-OFF-AUTO selector switch at the pop-up window in the **OFF** position, the selected blower is prohibited from running.
    c. With the HAND-OFF-AUTO selector switch at the pop-up window in the **AUTO** position, the selected blower is controlled by the PLC.

Normal operation for the aeration blowers is REMOTE-AUTO control mode. In REMOTE-AUTO control mode, the blower operation is controlled by the logic resident in the SCADA system PLC. The PLC receives a 4-20 milliampere (mA) signal from the discharge pressure header transmitter (05-PIT-300) and utilizes an algorithm to maintain an operator adjustable pressure setpoint by controlling the lead and lag blowers (on/off and speed control). The VFD of the operating blower(s) shall transmit a 4-20 mA signal, which is proportional to blower speed. The PLC shall utilize the blower speed signal to determine if the blower should operate at low speed (initially set at 50 percent) or high speed (initially set at 100 percent).

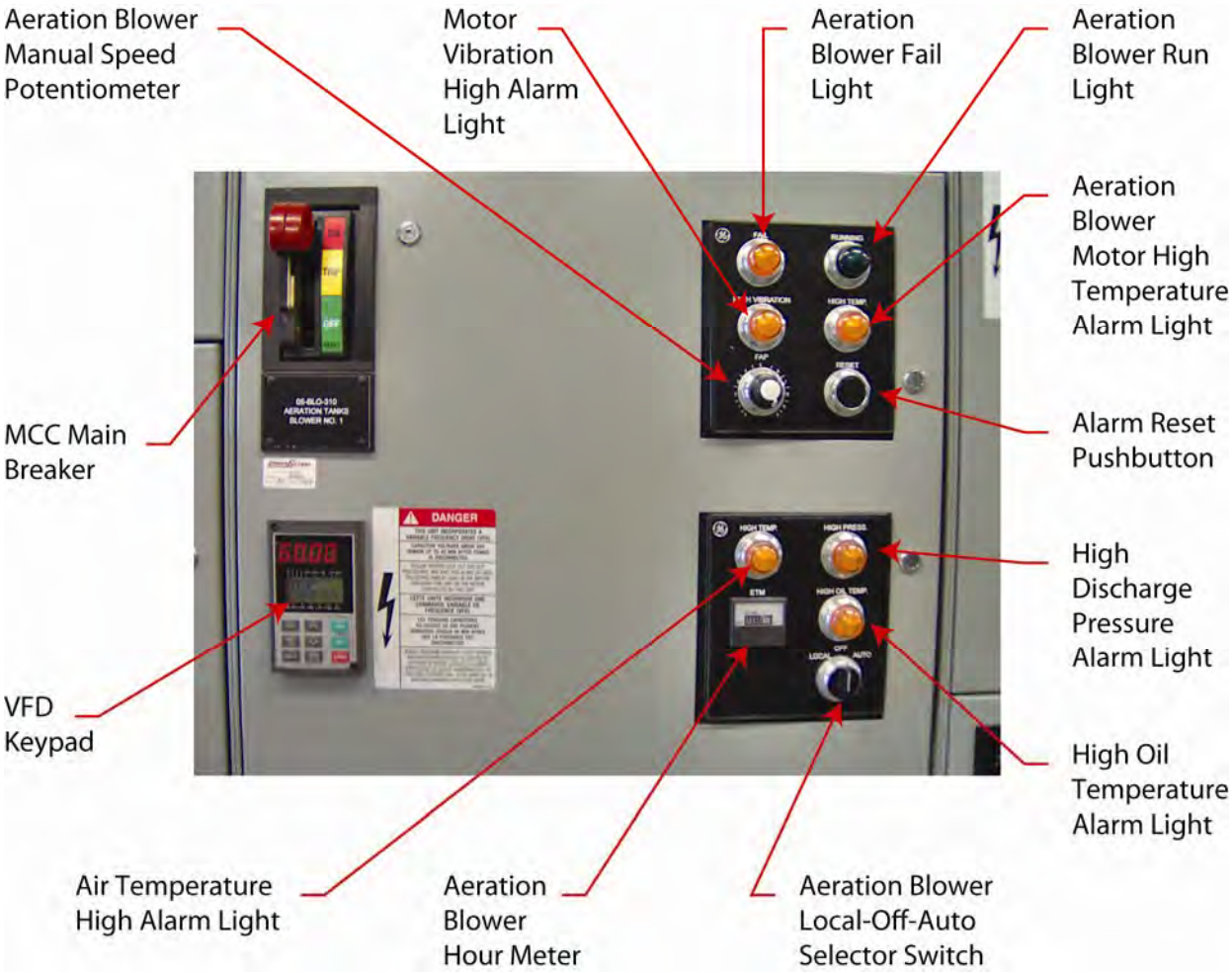

Aeration Blower No. 1 Motor Control Center

PHOTO 4.3

California Department of Corrections
and Rehabilitation
Deuel Vocational Institution Wastewater Treatment Plant
Operations and Maintenance Manual

carollo
Engineers...Working Wonders With Water®

H:\Client\CDC SAC\6927\6927R11 - DVI - DD and CD Phase\O&M Manual\O&MManualPhotos\WordFiles\PhotoNo4.3.doc

When the discharge header pressure increases above the pressure setpoint for more than an adjustable time delay (initially set at 20 seconds), the lead blower shall start at a low speed to maintain the pressure setpoint. If the level increases and remains above the pressure setpoint continuously for more than an adjustable time delay with the lead blower running at maximum speed, the lead blower shall ramp down to 60 percent and the second blower (i.e., lag blower) shall start at the same speed. Both blowers increase speed together to maintain the pressure setpoint.

With two blowers running, if the pressure decreases and remains below the pressure setpoint continuously for more than the adjustable time delay with the blowers running at 50 percent, the lead blower shall stop, and the lag blower shall ramp up to 95 percent of maximum speed. The blowers will modulate to maintain the pressure setpoint.

If the PLC attempts to run a blower and does not receive a BLOWER ON signal within an adjustable time (initially set to 10 seconds), the PLC shall lock out the blower and initiate a FAIL TO START alarm. The blower shall remain locked out until RESET selection has been made. The start sequence will then be shifted to the next available blower (i.e., from LEAD to LAG or LAG to STANDBY).

Each blower is supplied with a MOTOR HIGH TEMPERATURE switch, HIGH VIBRATION switch, and HIGH DISCHARGE switch. If any one of these switches is activated, the blower will stop and an alarm is displayed at the OIS. When a VFD failure is detected, the blower shuts down and a VFD FAIL alarm is annunciated at the OIS. The OIS also displays the blower RUNNING status.

4.4.5 Membrane Bioreactor System

The key technological feature of the MBR system is the membrane ultra-filtration unit, which enables the MBR system to be operated at elevated high MLSS in the range of 8,000 to 12,000 mg/L and long solids retention times (SRTs) of 12 to 20 days. The combination of long SRT and high MLSS results in a more efficient treatment for destroying more complex organic pollutants, reducing sludge yield, and producing a highly stabilized sludge. The extended SRTs also ensure complete nitrification.

The MBR system is made up of cassettes/rakes submerged in the membrane tanks, in direct contact with the ML from the preceding activated sludge aeration tanks. The MBR system utilizes a process that filters particles based on size to separate or remove relatively large particles, such as emulsified oils, suspended solids, and macromolecules with molecular weights greater than approximately 50,000 Daltons. While the membranes typically contain pores that are sub-micron in size, in wastewater applications, a gel layer typically forms on top of the membrane surface, and performs much if the size-exclusion filtration.

The fine screen effluent flows via gravity to the activated sludge aeration tanks with diffused air and enters the anoxic zone where it is mixed with recycled ML (i.e., returned activated sludge) from the membrane tanks. ML from the membrane wet well is f

ed to the membrane tanks based on a running average of the influent flowmeter and the membrane wet well water level to minimize instantaneous flux rates. The ML is pumped to a header that equally distributes the flow to the four membrane tanks. Through the use of a rotary lobe permeate pump, a vacuum is applied to a header connected to the downstream, permeate side of the membrane cassettes/racks. The filtrate (i.e., permeate or membrane effluent) is drawn through the membrane from the bulk fluid by a partial vacuum applied within the membrane porous fiber support (lumen). Airflow is introduced to the bottom of the membrane cassette producing turbulence that scours the external surface of the hollow fibers, transferring rejected solids away from the membrane surface. This helps to minimize contaminant build-up on the membrane surface. This airflow also provides a large portion of the process biological oxygen requirements. Periodically, the membranes are backpulsed by pumping a fraction of the permeate back through the membrane fibers, forcing flow in the reverse direction, to remove fouling material from the surface of the membrane. ML from the membrane tanks flows by gravity back to the activated sludge aeration tank splitter box. The membrane effluent proceeds to the UV disinfection system. Figure 4.6 illustrates the plan view for membrane tanks including the associated equipment and piping. Figure 4.7 shows the sections.

The MBR system consists of the following components:

- Membrane Wet Well
- Membrane Feed Pumps
- Membrane Tanks
- Membrane Elements
- Membrane Permeate Pumps
- Membrane Aeration Blowers
- Membrane Cleaning System
- Membrane Process Instrumentation and Control System

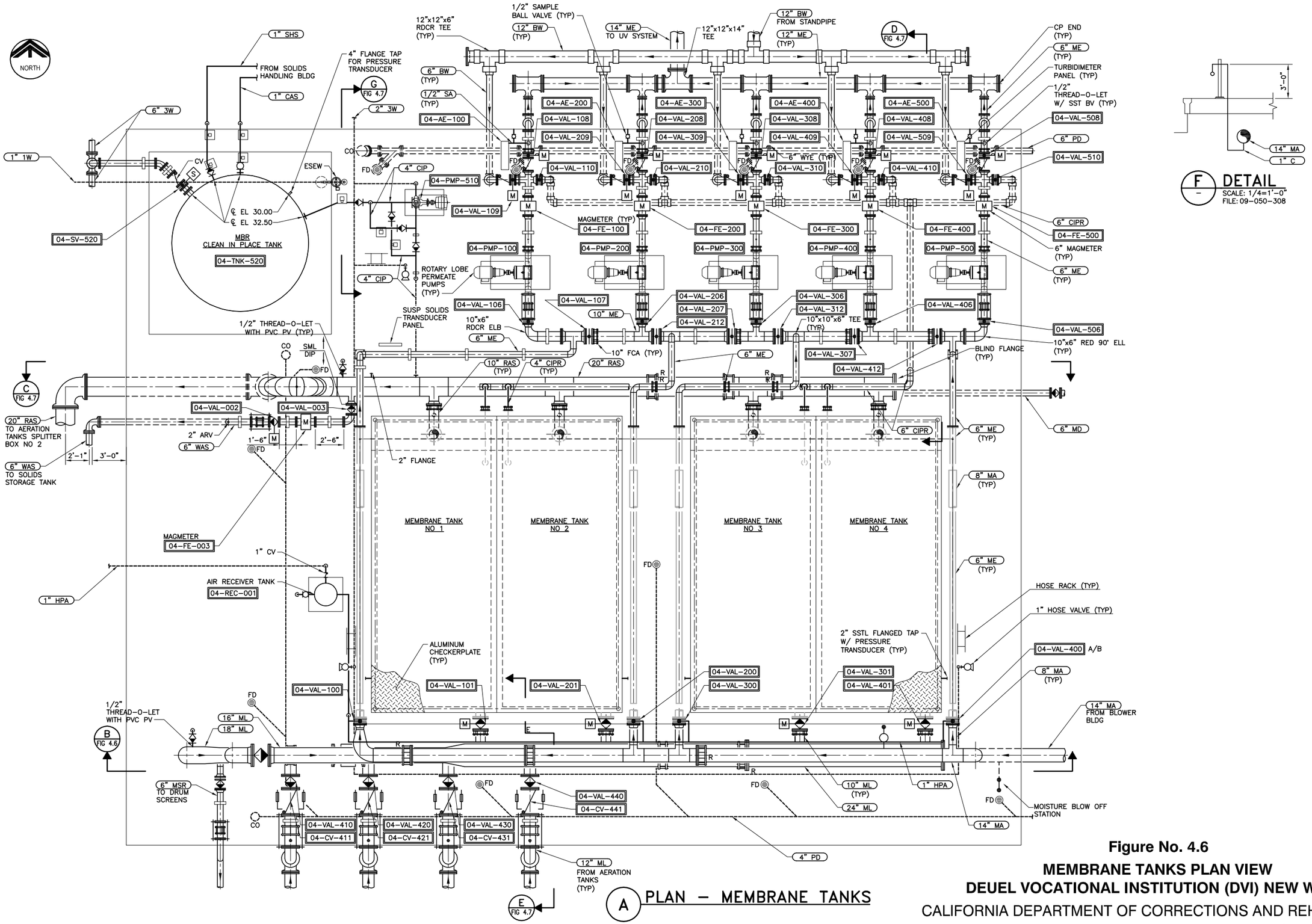

Figure No. 4.6

MEMBRANE TANKS PLAN VIEW

DEUEL VOCATIONAL INSTITUTION (DVI) NEW WWTP

CALIFORNIA DEPARTMENT OF CORRECTIONS AND REHABILITATION

carollo

Engineers...Working Wonders With Water ™

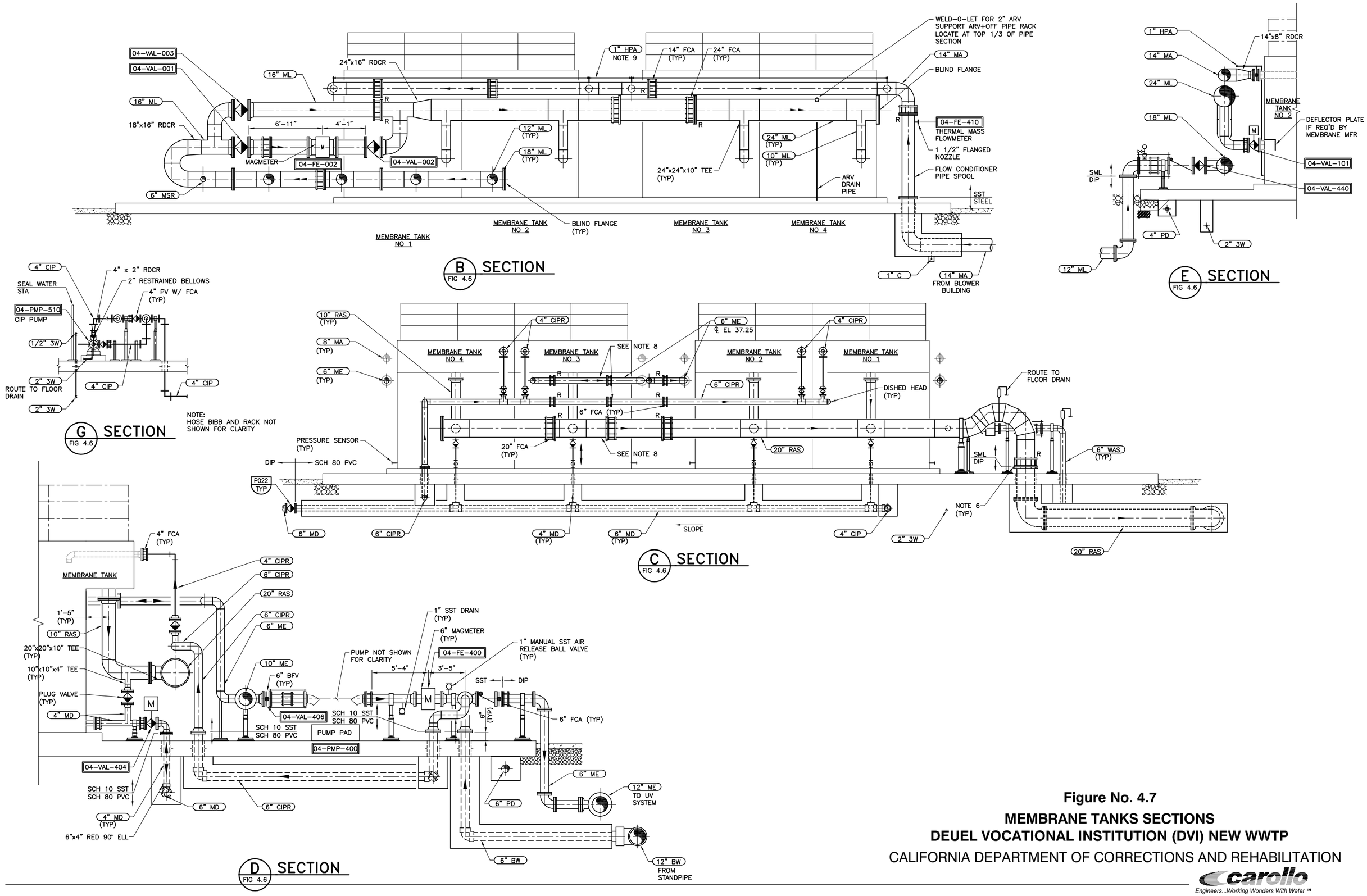

Figure No. 4.7

MEMBRANE TANKS SECTIONS

DEUEL VOCATIONAL INSTITUTION (DVI) NEW WWTP

CALIFORNIA DEPARTMENT OF CORRECTIONS AND REHABILITATION

carollo

Engineers...Working Wonders With Water ™

4.4.5.1 Membrane Wet Well

After the final aerobic zone in the aeration tanks, the ML passes over a free-flowing weir and collects in the membrane wet well. The operating water depth of the wet well will vary between 5 and 25 feet. The membrane wet well consists of two compartments, each corresponding to an aeration tank. A concrete wall, containing a sluice gate, divides the east compartment from the west compartment. During periods of maintenance, or if the operator chooses to utilize one of the membrane wet wells, it can be separated into two compartments by use of the 24-inch by 24-inch sluice gate (03-GAT-401). The sluice gate is operated manually (open/close) by use of a manual crank operator.

4.4.5.2 Membrane Feed Pumps

Located in the membrane wet well are four centrifugal non-clog submersible membrane feed pumps (03-PMP-410, 03-PMP-420, 03-PMP-430, and 03-PMP-440) used to feed ML to the membrane tanks and provide adequate water for recirculation; refer to Figure 4.1. Two of the membrane feed pumps (03-PMP-410 and 03-PMP-420) are installed in the west wet well, while the other two pumps (03-PMP-430 and 03-PMP-440) are installed in the east wet well. Three pumps are designed for continuous operation (03-PMP-410, 03-PMP-420, and 03-PMP-430) while the fourth pump (03-PMP-440) acts as a standby unit. Each pump has a dedicated VFD. Photo 4.4 shows MBR Feed Pump No. 1.

On the discharge line of each pump is a plug valve for isolation and a check valve to prevent water from traveling back through the pump. The discharge lines combine into a 24-inch header pipe equipped with a 20-inch magnetic flowmeter (03-FIT-401) to measure ML flow to the membrane tanks.

The pumps operate based on the permeate flow times a recirculation setpoint plus one (i.e., 5.5Q + Q). The recirculation setpoint is operator adjustable. As the plant flow increases the recirculation increases, causing the pump(s) to speed up.

4.4.5.2.1 *Membrane Feed Pump Controls*

Each membrane feed pump (03-PMP-410, 03-PMP-420, 03-PMP-430, and 03-PMP-440) has START/LOCKOUT/STOP/RESET pushbuttons and L-O-R selector switch at MCC-P1, which is located in the Blower/Electrical Building. Also located at the MCC-P1 are VFDs for each pump, which consists of a remote mode and manual speed potentiometer that can be used to locally adjust the speed of the pump.

1. With the L-O-R selector switch at MCC-P1 in the **LOCAL** position, the membrane feed pump is controlled manually by the operator using the **START/STOP** pushbuttons and **SPEED** potentiometer.
2. With the L-O-R selector switch at MCC-P1 in the **OFF** position, the membrane feed pump is prohibited from running.

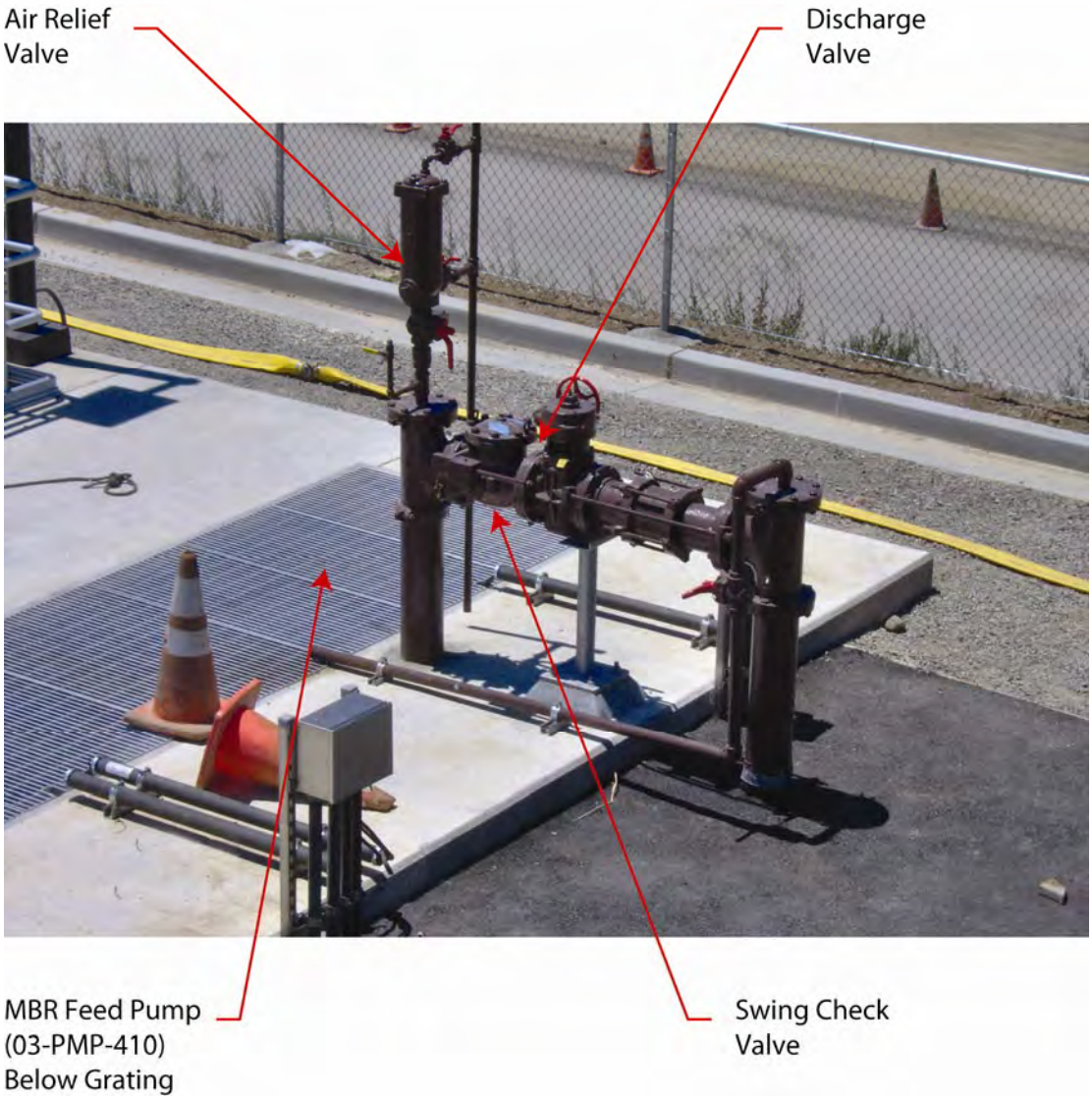

MBR Feed Pump No. 1

PHOTO 4.4

California Department of Corrections
and Rehabilitation
Deuel Vocational Institution Wastewater Treatment Plant
Operations and Maintenance Manual

carollo
Engineers...Working Wonders With Water®

3. With the L-O-R selector switch at MCC-P1 in the **REMOTE** position, the membrane feed pump is controlled through the PLC:
   a. With the HAND-OFF-AUTO selector switch at the pop-up window in the **HAND** position, the selected pump is controlled manually by the operator using the **START**/**STOP** pushbuttons and entering a percent **SPEED**.
   b. With the HAND-OFF-AUTO selector switch at the pop-up window in the **OFF** position, the selected pump is prohibited from running.
   c. With the HAND-OFF-AUTO selector switch at the pop-up window in the **AUTO** position, the selected pump is controlled by the PLC.

Normal operation for the membrane feed pumps is REMOTE-AUTO control mode. In REMOTE-AUTO control mode, membrane feed pump operation is controlled by the wet well signal from the wet well level indicating transmitter and utilizing a proportional plus integral (PI) algorithm to maintain an operator adjustable level setpoint (initially set at 12 feet from the bottom of wet well) by controlling the lead and lag pumps (on-off and speed control). Each VFD shall transmit signal to the PLC, which is proportional to pump speed. The PLC shall utilize the speed signal to determine when pump is at low speed (initially set at 65 percent) or high speed (initially set at 100 percent).

The membrane feed flow, all pump control, and status information is passed from the membrane PLC to the plant PLC located in the Blower/Electrical Building. The SCADA system monitors the membrane wet wells levels through wet well level transmitters (03-LE-402 Membrane Wet Well of Aeration Tank 1 and 03-LE-404 Membrane Wet Well of Aeration Tank 2). All pumps are stopped at low wet well level condition. The membrane feed pumps will stop if a motor moisture or temperature condition occurs. A common pump failure alarm will be generated at the OIS.

4.4.5.3 Membrane Tanks

The membrane feed pumps deliver the ML to four membrane tanks housing the membrane cassettes/racks. A feed valve (04-VAL-100, 04-VAL-200, 04-VAL-300, and 04-VAL-400) is located on the inlet to each membrane tank; refer to Figure 4.6. The valve is used to isolate the feed water and the membrane tank during maintenance and cleanings. Each membrane tank has six cassettes/racks with space for one spare cassette/rack. Each rack has 16 modules per rack.

4.4.5.4 Membrane Cassettes/Racks

The membranes have a nominal pore size of 0.04 to 2.0 microns forming a physical barrier that prevents the passage of contaminants and solids into the treated water stream. The water being treated passes through the membrane as clean filtrate (permeate), while the membrane rejects the contaminants. Treated water is discharged from the membrane unit, while the concentrated contaminants (reject) remain in the membrane tank for eventual recycle or wasting (i.e., RAS or WAS).

The membrane cassettes/racks in each membrane tank are connected to permeate pump suction pipes, and each of these is equipped with isolation valves and pressure transmitter to control and monitor the trans-membrane pressure (TMP).

4.4.5.5 Permeate/Backpulse Pumps

The permeate (membrane effluent (ME)) is removed from the bulk fluid in the membrane tank using negative pressure (vacuum) inside the membrane fibers. The membrane tanks are equipped with permeate/backpulse pumps (04-PMP-100, 04-PMP-200, 04-PMP-300, 04-PMP-400, and 04-PMP-500), which induce the negative pressure. The permeate/backpulse pumps are rotary lobe positive displacement type, which convey water to the UV disinfection system and the standpipe (08-TNK-104), used to clean the membranes. The pumps are fitted with VFDs to allow precise control of the permeate flow rate. On the discharge line of each pump is a magnetic flowmeter (04-FIT-100, 04-FIT-200, 04-FIT-300, 04-FIT-400, and 04-FIT-500) to measure the permeate production; refer to Figure 4.6. Due to high concentrations of DO in the membrane tanks and the vacuum across the membrane, there is a tendency for dissolved air to be released from the water. To prevent problems associated with air locks in the piping and UV system, which may cause disinfection system to not be effective, an air release valve is incorporated into the piping system. Each permeate pump suction line connects to a ME header that transports the effluent to the UV system. The air release valve is located on the effluent header prior to the UV system. A photo of the Rotary Lobe Permeate Pump No. 1 is included in Photo 4.5.

4.4.5.5.1 *Permeate/Backpulse Pump Controls*

The permeate/backpulse pump operates in production and backpulse mode. The following describes the controls for both modes of operation.

Production Mode

The treatment plant's PLC will send the membrane manufacturer's PLC an effluent flow for the membrane tanks to produce. The effluent flow is the membrane feed minus recycle plus trim. The treatment plant's PLC signal is used to control the total membrane effluent flow demand. As the membrane feed increases, the total membrane effluent flow demand increases, causing the process pump(s) to speed up.

The total membrane effluent flow, including the level trim, is divided among the tanks without a manually entered flow. This becomes the net production flow for a tank. The net production flow is then used to calculate the instantaneous membrane effluent flow for the tank. This value controls the membrane effluent pump speed through the flow Proportional Integral Derivative (PID) loop. Instantaneous membrane effluent flow is higher than the net membrane effluent flow as it accounts for the time that the membrane tank is not producing water (i.e., backpulse cleaning) during a production cycle. The instantaneous membrane effluent correction factor is determined by process and is a constant in the PLC.

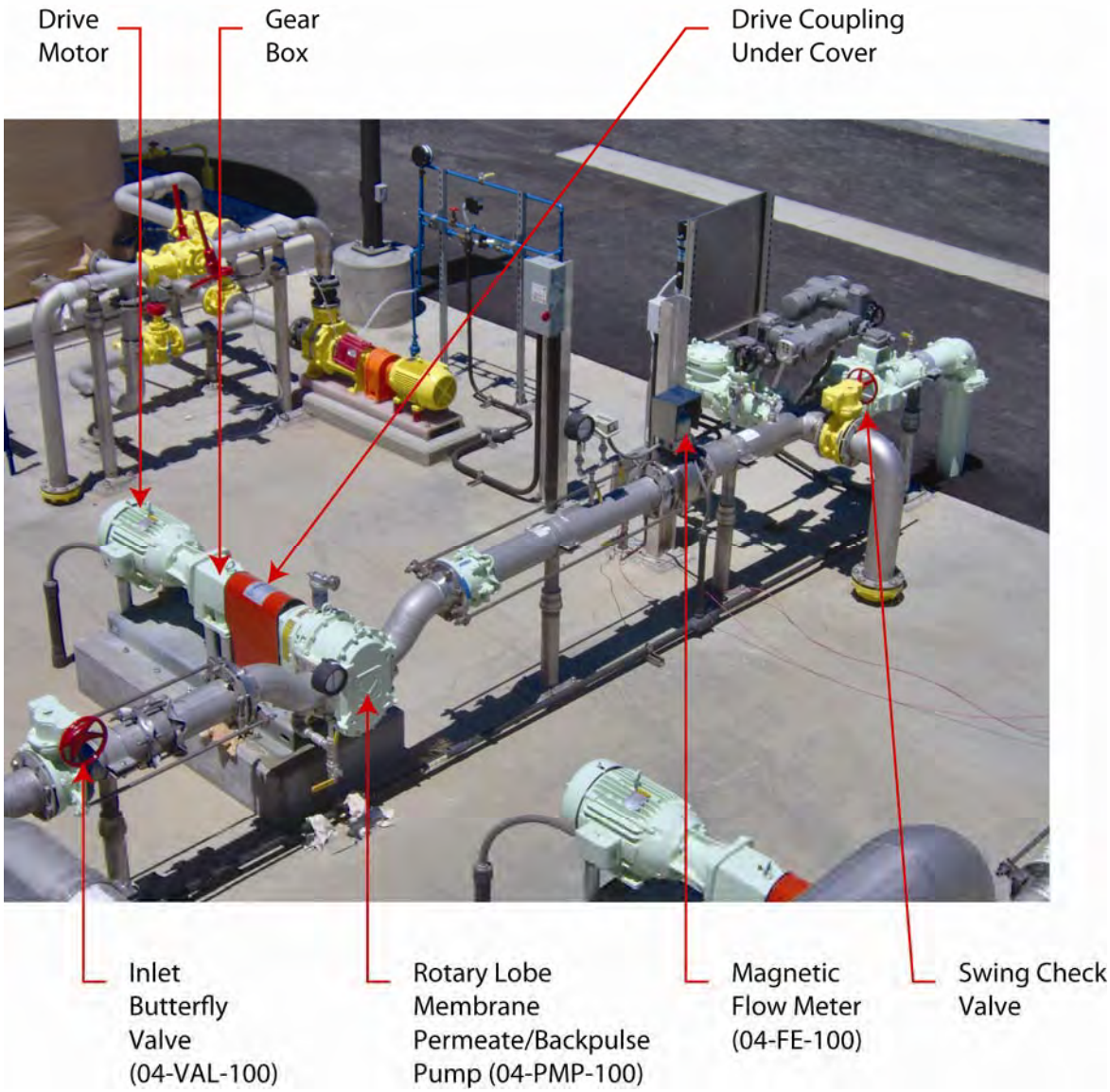

MBR Permeate Pump No. 1

PHOTO 4.5

California Department of Corrections
and Rehabilitation
Deuel Vocational Institution Wastewater Treatment Plant
Operations and Maintenance Manual

carollo
Engineers...Working Wonders With Water®

H:\Client\CDC SAC\6927\6927R11 - DVI - DD and CD Phase\O&M Manual\O&MManualPhotos\WordFiles\PhotoNo4.5.doc

A membrane effluent flow may also be entered for each tank manually. The operator may do this by setting the membrane effluent flow rate for some or all of the tanks on the OIS. The system will maintain the operator entered or PLC calculated membrane effluent up to a maximum TMP or a minimum tank level.

Backpulse Mode

The membrane manufacturer's PLC controls the pump speed to backpulse the tanks at a set flow rate per tank up to a maximum TMP. A transmitter on the membrane header is used to calculate the backpulse TMP. This provides membrane protection against over-pressurization. If the backpulse TMP exceeds a setpoint, control of the pump switches to TMP control from flow control. Both flow and TMP PID loops operate simultaneously. TMP control reduces the backpulse flow rate to maintain a maximum backpulse TMP.

The backpulse frequency, duration, TMP setpoint, and flow setpoint for all membrane tanks can be set at the OIS. All membrane tanks in the plant share the same backpulse frequency and duration.

4.4.6 Membrane Air Scour System

The membrane air scouring blower system provides both mixing of the membrane tank contents and agitation of membrane fibers to reduce the fouling effects of suspended solids. The air also provides additional process aeration while the ML is in the membrane cassette tanks.

The number of blowers operating depends on the mode of aeration and on the number of membrane tanks operating. The airflow to the membrane tank is either cyclic aeration or constant aeration. Normally, cyclic aeration is used. The valves cycle air between the two groups of cassettes/racks in a tank, reducing the number of blowers and air required to run the system and the operating costs. These valves cycle through open/close in 10-second intervals. One blower supplies sufficient air to operate up to three tanks in cyclic aeration mode.

The membrane air-scouring blowers enhance the functioning of the membrane system and must be used whenever the system is in operation. Intermittent aeration, aeration for 2 minutes every 30 minutes, is also required to keep the solids in suspension for a tank in shutdown, standby, or off modes.

4.4.6.1 Air Scour Blowers

Three rotary lobe positive displacement blowers with VFDs (06-BLO-410, 06-BLO-420, and 06-BLO-430) supply aeration air to the membrane tanks. Two blowers are meant for running continuously while the third one acts as a standby unit. Blower duty is alternated according to an operator entered run time. Photo 4.6 shows Membrane Blower No. 1.

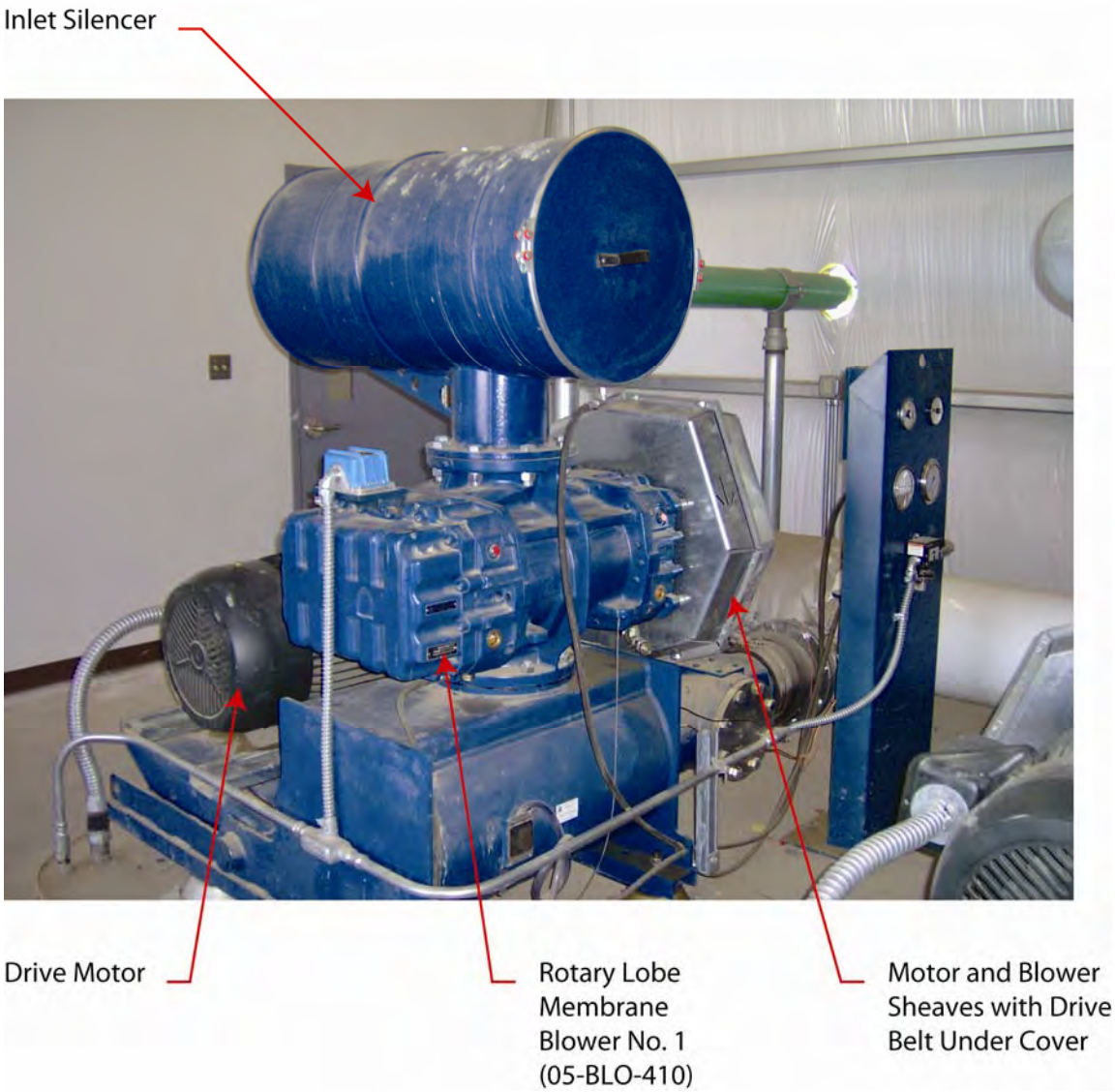

Membrane Blower No. 1

PHOTO 4.6

California Department of Corrections
and Rehabilitation
Deuel Vocational Institution Wastewater Treatment Plant
Operations and Maintenance Manual

carollo
Engineers...Working Wonders With Water®

The volume of air through an operating blower is varied using VFD's on the blowers. Each blower has a capacity of 1,710 scfm at 4.3 (psia discharge pressure. The three blowers are located in the Blower/Electrical Building, which is east of the Aeration Tanks; refer to Figure 4.5. The blowers supply low-pressure air into a common air header for all of the tanks. This common air header then divides into multiple air headers to the membrane tanks.

4.4.6.1.1 *Air Scour Blower Controls*

Each membrane blower (05-BLO-410, 05-BLO-420, and 05-BLO-430) has START/LOCKOUT/STOP/RESET pushbuttons and L-O-R selector switch at MCC-P1, which is located in the Blower/Electrical Building. Also located at the MCC-P1 is the VFD for each blower, which consists of a manual speed potentiometer that can be used to locally adjust the speed of the blower. A photo of Membrane Blower No. 1 MCC is shown in Photo 4.7.

1. With the L-O-R selector switch at MCC-P1 in the **LOCAL** position, the aeration blower is controlled manually by the operator using the **START/STOP** pushbuttons and **SPEED** potentiometer.
2. With the L-O-R selector switch at MCC-P1 in the **OFF** position, the aeration blower is prohibited from running.
3. With the L-O-R selector switch at MCC-P1 in the **REMOTE** position, the aeration blower is controlled through the PLC:
    a. With the HAND-OFF-AUTO selector switch at the pop-up window in the **HAND** position, the selected blower is controlled manually by the operator using the **START/STOP** pushbuttons and entering a **SPEED** setpoint.
    b. With the HAND-OFF-AUTO selector switch at the pop-up window in the **OFF** position, the selected blower is prohibited from running.
    c. With the HAND-OFF-AUTO selector switch at the pop-up window in the **AUTO** position, the selected blower is controlled by the PLC.

Normal operation for the membrane blowers is REMOTE-AUTO control mode. In REMOTE-AUTO control mode, the blower operation and the speed is controlled by the membrane manufacturer's PLC to maintain predefined aeration setpoints using a PID control loop based on demand. A flowmeter is used to determine the flow rate in the common air discharge header. The membrane manufacturer's PLC will start and stop blowers as necessary to maintain the desired airflow. All of the blowers will operate at the same speed when running. A low airflow switch is located on the discharge of each blower, for blower protection. If the switch is active, the membrane manufacturer's PLC will change the lead to the next available blower. If there is no other blower available, the membrane manufacturer's PLC will shutdown tanks so that the number of blowers available to run in AUTO is adequate for the number of tanks requiring air. This is done to ensure that the

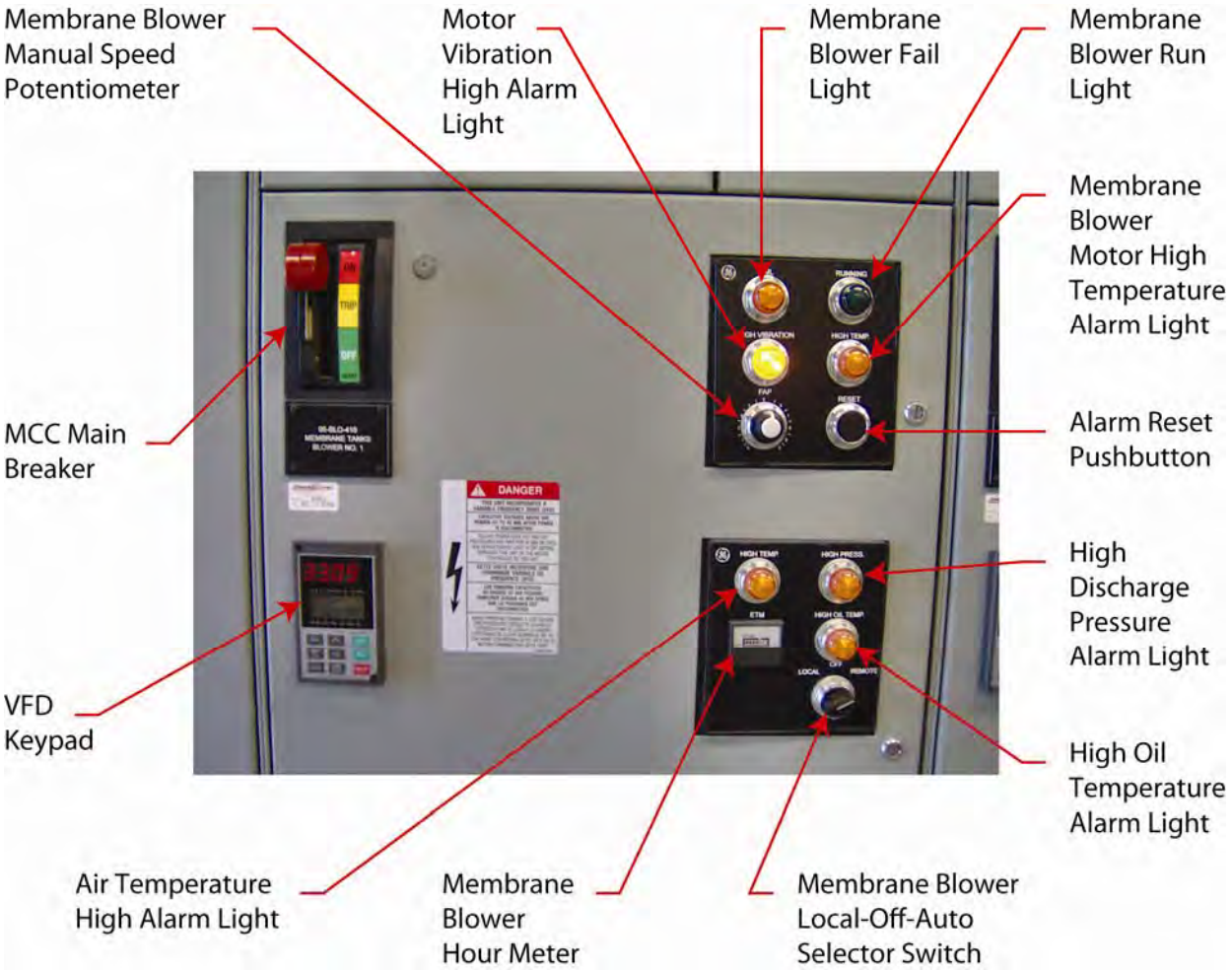

Membrane Blower No. 1 Motor Control Center

PHOTO 4.7

California Department of Corrections
and Rehabilitation
Deuel Vocational Institution Wastewater Treatment Plant
Operations and Maintenance Manual

carollo
Engineers...Working Wonders With Water®

H:\Client\CDC SAC\6927\6927R11 - DVI - DD and CD Phase\O&M Manual\O&MManualPhotos\WordFiles\PhotoNo4.7.doc

membranes are not under aerated. Additionally, if a cyclic valve fails, the membrane manufacturer's PLC will deactivate the cyclic aeration.

4.4.7 MBR Cleaning System

As the feed water from the aeration tanks is drawn through the membranes during filtration, solids accumulate on the membrane surface. As solids accumulate, they restrict flow through the membranes and eventually membrane cleaning is required in order to maintain the filtered water flow rate.

The frequency of cleaning will depend on the specific operating conditions (operating time, feed flow rates, permeate flow rates) and on the particular chemistry of the feed water being processed. During normal operation, membranes can become fouled by mineral salts (CaCO3, CaSO4, and MgSO4), as well as iron (Fe), insoluble organics (e.g., oil), or biological matter (bacteria or microbial byproducts). Deposits that build up on the membrane surface during operation can cause a loss in permeability. It should be noted that permeability will drop if the feed temperature decreases. This is an expected behavior and does not necessarily indicate fouling.

Permeability can be corrected for the following equation:

$$P_{20} = P_1 \times TCF^{(20-t)}$$

Where:

P_{20} = Permeability at 20 degrees (C)

P_t = Permeability at measured temperature in degrees (C)

TCF = Supplier's temperature correction factor

The membrane cleaning system is comprised of permeate/backpulse pumps (04-PMP-100, 04-PMP-200, 04-PMP-300, 04-PMP-400, and 04-PMP-500), CAS feed pumps (10-FDR-310 and 10-FDR-320), SHS feed pumps (10-FDR-220 and 10-FDR-230), sodium hypochlorite tote (10-HT-110), CAS batch tank, standpipe (09-TNK-104) and Clean-In-Place (CIP) tank (04-TNK-520).

There are three types of membrane cleaning method: (1) Backpulse/Relax Cleaning, (2) Maintenance Cleaning, and (3) Recovery Cleaning. The following sections describe each type of membrane cleaning.

4.4.7.1 <u>Backpulse Cleaning</u>

Backpulse cleaning is achieved by pumping a portion of the permeate that is stored in the standpipe through the membranes in the reverse flow direction (i.e., backpulsing the flow) in

a series of pulses. The operator can select to either automatically backpulse or relax the membrane tank. The first sequence in the production cycle is the backpulse/relax operating state. During relax mode, the membranes will sit for an operator-specified duration before resuming production. The relax duration is equal to the backpulse duration. During this time, the membrane aeration will disperse the solids that have concentrated around the membranes. This backpulse sequence occurs automatically at an interval and duration selected by the operator. Typically, the backpulse occurs every 15 minutes for 30 seconds. The permeate/backpulse pump draws permeate from the standpipe and pumps permeate through the membranes for the defined time. The permeate/backpulse pump stops and the tank returns to production. The standpipe is filled automatically with permeate during normal plant operation. All membrane tanks share the same backpulse frequency and duration. The system backpulses sequentially throughout each cycle for all tanks in production. Backpulse cleaning will not occur during the

4.4.7.2 Maintenance Cleaning

Maintenance cleaning is an important automatic procedure that results in consistent performance of the membranes. Once every 3 days, a maintenance cleaning is conducted using 200 mg/L of chlorine and once every 7 days, a maintenance cleaning is conducted using 2,000 mg/L of citric acid. The cleaning solution is pumped back through the membrane fibers, similar to a backpulse. The operator must ensure that there are sufficient cleaning chemicals available. The operator must set the day, time, and the cleaning chemicals for each unit. Maintenance cleaning will have to occur between 7:00 a.m. and 5:00 p.m., when system receives adequate flow to perform demand is lowest.

Maintenance cleaning is to be implemented right after the startup of operation and when the elements are placed back into operation after a recovery cleaning. Regular maintenance cleaning results in sustaining a higher flux and increases the time interval between recovery cleanings. The cleaning is done in a full membrane tank and each cleaning lasts about 20 minutes. Only one tank at a time can be in maintenance clean or recovery clean mode.

The use of rotational cleaning between sodium hypochlorite and citric acid (e.g., one cleaning event with sodium hypochlorite and the next one with citric acid or a protocol with different frequency) is recommended.

Maintenance cleaning is automatically initiated by the PLC according to the operator setting. The operator also selects either sodium hypochlorite or citric acid as a cleaning solution. The cleaning solution injection assembly includes a dosing pump, level switches, calibration column, and valves.

The backpulse/maintenance clean pump pumps the permeate through the membranes in the reverse flow direction in a series of pulses. Sodium hypochlorite and/or citric acid solutions are injected into the permeate line by sodium hypochlorite and citric acid feed pumps.

4.4.7.3 Recovery Cleaning

As the membranes are operated, they become fouled which results in a lower flux rate or higher TMP to maintain a fixed flux rate. The control valve is adjusted accordingly to maintain the flow rate until the membrane flux rate drops below a set point and a recovery clean is necessary. The recovery clean sequence is required when the TMP control limit is reached. The TMP control limit has priority over the flow control. Once the TMP reaches the limiting value, the control valve will maintain the pressure, even if the flow setpoint has not been achieved.

The recovery cleaning has two substrates: chlorine clean and acid clean. A chlorine recovery clean removes organics, while an acid recovery clean removes inorganics. This is a semi-automatic, operator-driven procedure.

A recovery clean pump draws diluted chemicals (i.e., sodium hypochlorite or citric acid) from the CIP tank. The recovery clean pump transfers the chemical cleaning solution to a membrane tank. A second recovery clean pump draws the chemical cleaning solution in the membrane tank through the membranes in the reverse flow direction in a series of pulses. After pulsing the tank with the chemical cleaning solution, the membrane tank soaks in cleaning solution for six hours. After the soak, the cleaning solution is pumped back to the CIP tank for future CIP cleanings. The membrane tank is refilled and the tank returns to the first step of the recovery clean. The operator must manually switch the tank to return to membrane production cycle.

For the chlorine clean, the sodium hypochlorite chemical feed pump pumps the sodium hypochlorite solution into the CIP tank. The acid clean procedure is similar to the chlorine clean except the citric acid solution is pumped to the CIP tank by the citric acid chemical feed pump.

Typically, there are four recovery cleans with hypochlorite. Given the quality of the influent wastewater, recovery cleans with citric acid should rarely have to be performed.

4.4.7.4 Sodium Hypochlorite CIP System

Sodium hypochlorite is used for periodic maintenance and recovery cleaning of the membranes. The process for CIP cleaning of the membrane tanks using sodium hypochlorite was discussed in Section 4.4.4. The paragraphs below describe the sodium hypochlorite CIP System.

The sodium hypochlorite CIP system includes a sodium hypochlorite chemical feed pump (13-FDR-111) and a sodium hypochlorite tote (10-HT-110). The sodium hypochlorite tote has a volume of 300 gallons.

Sodium hypochlorite chemical feed pump will transfer 12 percent sodium hypochlorite at 16.7 gpm for a time period of 13 minutes (for a calculated transfer volume of 223 gallons) to

the CIP tank. For information on operations and controls of the sodium hypochlorite metering pump, please refer to Chapter 6, Chemical Systems.

4.4.7.5 Citric Acid CIP System

Citric acid is used for periodic and recovery cleaning of the membranes. The process for CIP cleaning of the membrane tanks using citric acid was discussed above. The paragraphs below describe the citric acid CIP system.

The citric acid CIP system includes a citric acid batch tank (10-TK-300) and citric acid recovery/maintenance clean feed pump (10-FDR-310 for membranes). The CAS batch tank has a volume of 600 gallons.

Citric acid chemical feed pumps will transfer 50 percent citric acid at 6.6 gpm for a time period of 13 minutes (for a calculated transfer volume of 89 gallons) into the CIP tank. For information on the operations and controls of the citric acid chemical metering pump please refer to Chapter 6, Chemical Systems.

4.4.7.6 Membrane CIP Pump

An ANSI horizontal end suction type pump (05-PMP-510) used to recirculate chemical to the membrane tanks to provide cleaning.

4.4.7.6.1 *Membrane CIP Pump Controls*

The CIP feed pump (04-PMP-510) has START/LOCKOUT/STOP/RESET pushbuttons and L-O-R selector switch at MCC-P1, which is located in the Blower/Electrical Building. Also located at the MCC-P1 are VFDs for each pump, which consists of a remote mode and manual speed potentiometer that can be used to locally adjust the speed of the pump.

1. With the L-O-R selector switch at MCC-P1 in the **LOCAL** position, the membrane CIP pump is controlled manually by the operator using the **START/STOP** pushbuttons and **SPEED** potentiometer.
2. With the L-O-R selector switch at MCC-P1 in the **OFF** position, the membrane CIP pump is prohibited from running.
3. With the L-O-R selector switch at MCC-P1 in the **REMOTE** position, the membrane CIP pump is controlled through the PLC:
    a. With the HAND-OFF-AUTO selector switch at the pop-up window in the **HAND** position, the membrane CIP pump is controlled manually by the operator using the **START**/**STOP** pushbuttons and entering a percent **SPEED**.
    b. With the HAND-OFF-AUTO selector switch at the pop-up window in the **OFF** position, the membrane CIP pump is prohibited from running.
    c. With the HAND-OFF-AUTO selector switch at the pop-up window in the **AUTO** position, the membrane CIP pump is controlled by the PLC.

Normal operation for the membrane CIP pump is REMOTE-AUTO control mode. In REMOTE-AUTO control mode, membrane CIP pump operation is controlled

4.4.8 RAS/WAS System

The RAS/WAS system includes the WAS flowmeter, WAS control valve, and associated piping. The ML from the membrane tanks flows by gravity via a 20-inch RAS line and 6-inch WAS line to the influent splitter box and SST, respectively. A control valve (04-VAL-002) and flowmeter (04-FIT-003) on the WAS line regulates the flow; refer to Figure 4.6. There is no control of the RAS flow. Photo 4.8 shows the Waste Activated Sludge Control Valve.

The amount of WAS flow is regulated by the WAS flowmeter and control valve. The operator will select the amount of flow to waste in order to maintain a MLSS of 10,000 mg/L and 15,000 mg/L in the aeration tanks and the SST, respectively. The operator inputs the amount of flow to be wasted for the day at the OIS. The flow is divided into an operator adjustable number of wasting cycles. Each cycle will run until the total flow to be wasted divided by the number cycles has passed.

4.4.8.1.1 *RAS/WAS System Controls*

The WAS valve (04-VAL-002) for regulating WAS flow can be controlled by the PLC, through the SCADA system, or locally using OPEN-STOP-CLOSE pushbuttons and the L-O-R selector switch at the valve, which is located adjacent to Membrane Tank No. 1.

1. With the L-O-R selector at the valve in the **LOCAL** position, the WAS control valve is controlled manually by the operator using the **OPEN/STOP/CLOSE** pushbuttons.
2. With the L-O-R selector at the valve in the **OFF** position, the WAS control valve prohibited from operating.
3. With the L-O-R selector at the valve in the **REMOTE** position, the WAS control valve is controlled through the PLC.
    a. With the HAND/OFF/AUTO selector switch at the pop up window in the **HAND** position, the WAS control valve is controlled manually by the operator using the **OPEN** or **CLOSE** button.
    b. With the HAND-OFF-AUTO selector switch at the pop-up window in the **OFF** position, the WAS control valve is prohibited from running.
    c. With the HAND/OFF/AUTO selector switch at the pop up window in the **AUTO** position, the WAS control valve is controlled by the PLC.

Normal operation for the WAS control valve is REMOTE-AUTO control mode. In REMOTE-AUTO control mode, the SCADA system will open the valve until the desired amount of flow has passed. Once the desired flow has passed, the valve will close until the next cycle. The cycle time shall be operator adjustable and initially be set at one hour. This will continue for the desired number of cycles or the desired flow has passed. When the all cycles are complete the will valve will remain closed until the waste sequence is reinitiated.

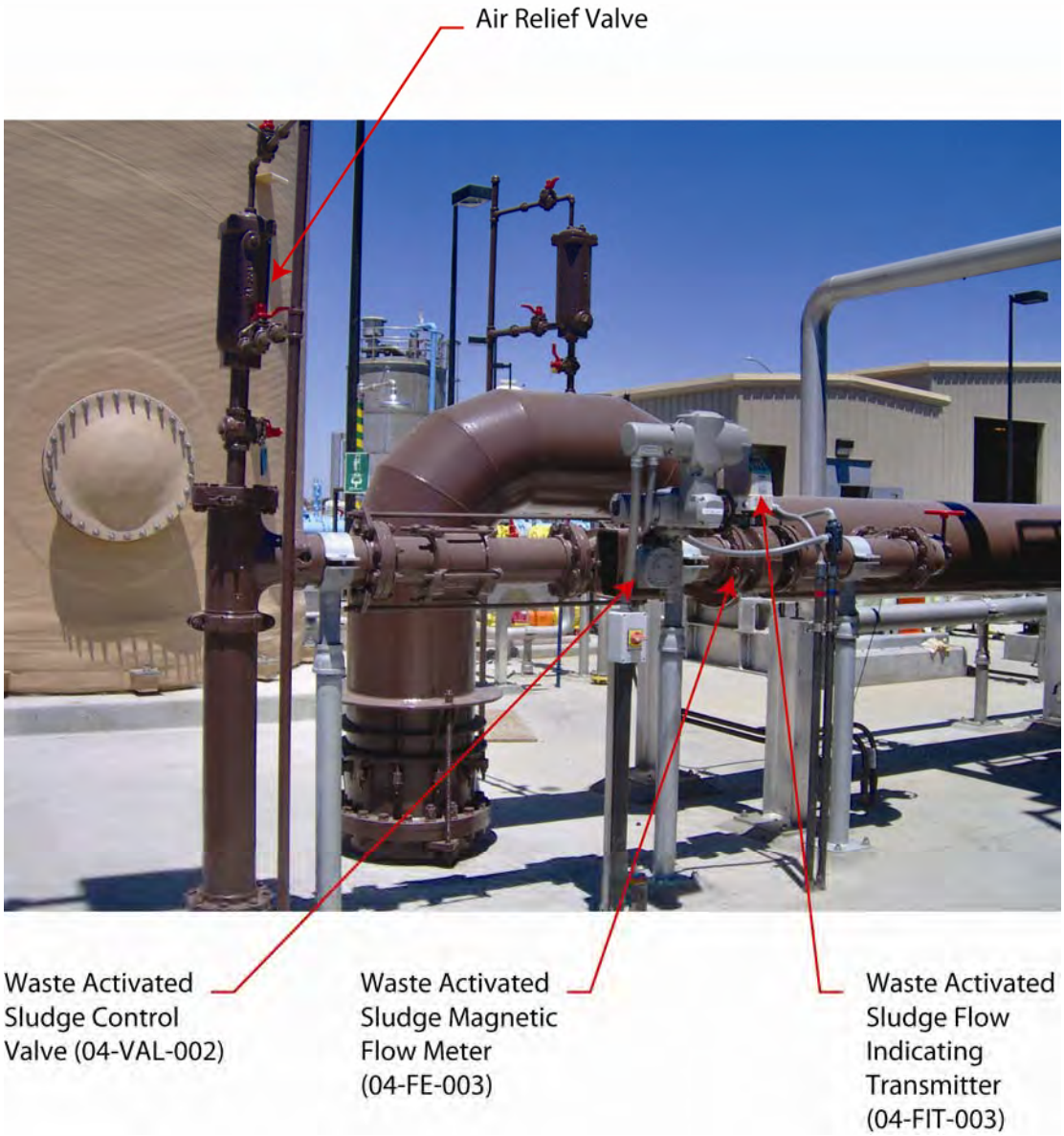

Waste Activated Sludge Control Valve

PHOTO 4.8

4.4.9 Utility System

Figure 4.8 illustrates the layout for blower building HVAC.

4.4.9.1 Electrical Room Air Handling Unit

The operation of the air handling unit (05-AHU-001) is a function of the ambient conditions inside the blower building. An occupant's comfort level will dictate the degree of heating or cooling to be supplied by the system. An operating temperature of approximately 70 degrees Fahrenheit (°F) is the standard indoor operating temperature for most occupied spaces.

4.4.9.1.1 *Electrical Room Air Handling Unit Controls*

The external power source for the air handling unit (05-AHU-001) and the air handling unit VCP (05-VCP-001) originates from distribution panel (DP-P1A) and lighting panel (LP-P1A), which are located in the operations building. The air handling unit may be operated automatically based on a thermostat setting, or manually by ON/OFF/AUTO switches located on 05-VCP-001. The normally occupied spaces should be operated automatically to reduce operator input.

4.4.9.2 Blower Room Exhaust Fan

Ventilation in the blower structure is provided by an exhaust fan (05-EF-001). The blower room exhaust fan has a centrifugal type sidewall exhaust fan shown in Figure 4.8. The blower building fan has a minimum capacity of 1,752 cubic feet per minute (cfm).

4.4.9.2.1 *Blower Room Exhaust Fan Controls*

The external power source for the blower building exhaust fan (05-EF-001) originates from lighting panel (LP-P1), which is located in blower building electrical room. An ON/OFF breaker is provided at LP-P1. The blower room exhaust fan will be manually operated on a continuous basis.

4.4.9.3 Blower Room Air Handling Unit

The operation of the air handling unit (05-AHU-002) is a function of the ambient conditions inside the blower building. An occupant's comfort level will dictate the degree of heating or cooling to be supplied by the system. An operating temperature of approximately 70 °F is the standard indoor operating temperature for most occupied spaces.

4.4.9.3.1 *Blower Room Air Handling Unit Controls*

The external power source for the air handling unit (05-AHU-002) and the air handling unit vendor control panel (05-VCP-002) originates from distribution panel (DP-P1A) and lighting panel (LP-P1A), which are located in the operations building. The air handling unit may be

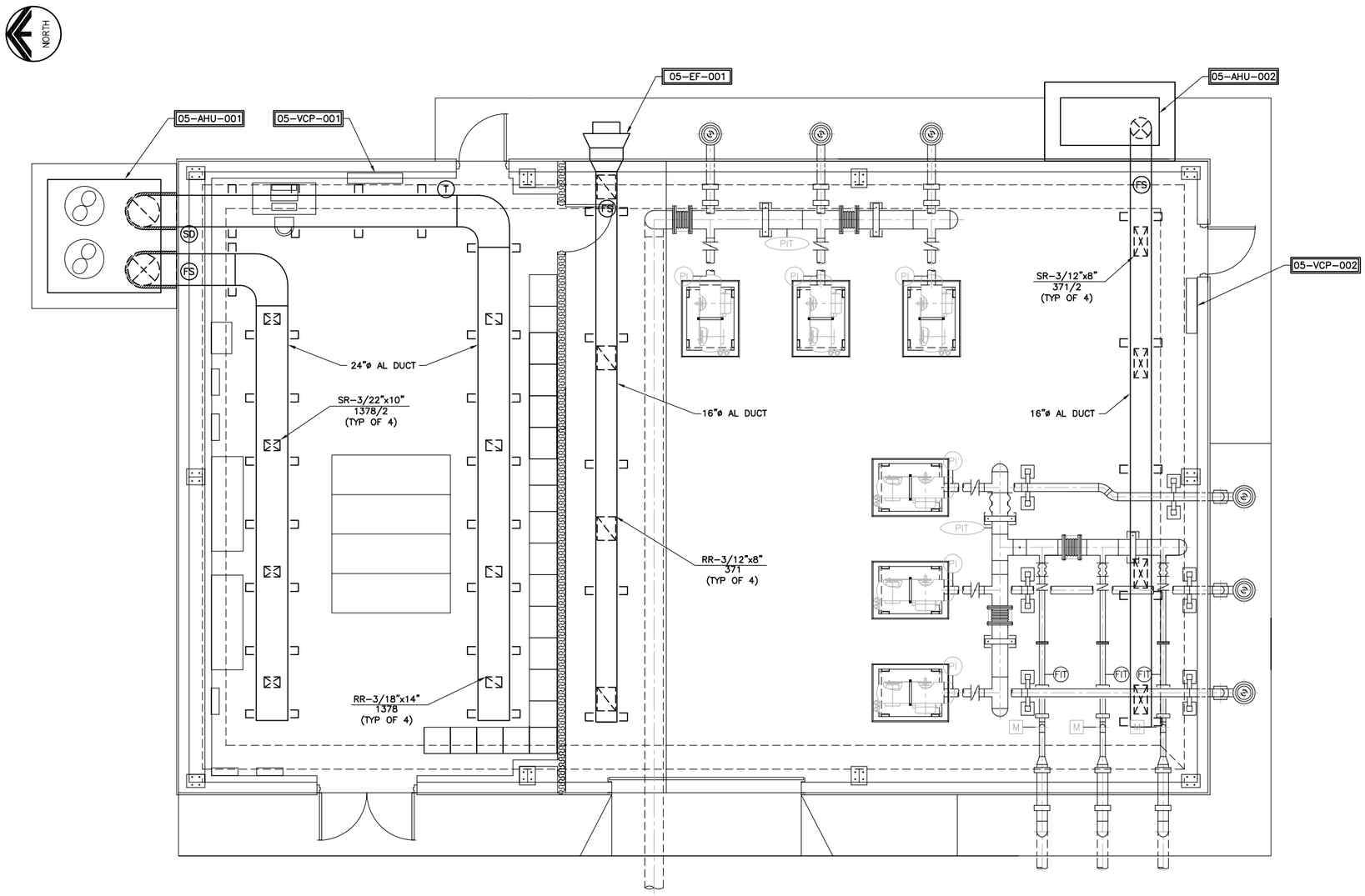

A PLAN – BLOWER/ELECTRICAL BUILDING – HVAC PLAN

Figure No. 4.8

BLOWER/ELECTRICAL BUILDING HVAC PLAN VIEW
DEUEL VOCATIONAL INSTITUTION (DVI) NEW WWTP

CALIFORNIA DEPARTMENT OF CORRECTIONS AND REHABILITATION

carollo
Engineers...Working Wonders With Water ™

operated automatically based on a thermostat setting, or manually by ON/OFF/AUTO switches located on 05-VCP-002. The normally occupied spaces should be operated automatically to reduce operator input.

4.5 ACTIVATED SLUDGE PROCESS CONTROL

The WWTP activated sludge process has been designed to achieve removal of nitrogen through nitrification and denitrification. Operation with nitrification is also generally considered more stable and easier to control than non-nitrifying operation. It also results in a reduction in total solids production, which reduces solids handling costs.

4.5.1 Process Performance and Evaluation

An evaluation of each unit process in the secondary treatment facilities is essential in achieving optimum performance. A laboratory testing and monitoring program of the influent and effluent from each treatment unit is required to determine if the individual processes are operating satisfactorily. Complete up-to-date records that are kept in an easy-to-review format are essential in solving operational problems and in performance evaluation. The computer program for the treatment facilities will provide valuable assistance by furnishing the pertinent data needed in review of the process operation. This program will provide the following data:

1. Air Requirements
2. BOD and Suspended Solids Removal
3. Kinetic Parameters
4. Nitrogen Removal

To assist in the performance evaluation, it is recommended that graphs for each of the above parameters be plotted based on a five-day moving average. These graphs will only require a few minutes per day to plot since the data will be readily available from the computer. Plotting these graphs will quickly indicate trends that occur in the treatment process. These trend indications will allow sufficient time to make adjustments in the process before a major upset occurs. In addition, the conclusions derived from the graphs will assist in optimizing treatment performance.

4.5.1.1 <u>Air Requirements</u>

A great deal can be learned about the operation of an activated sludge process by reviewing air requirement parameters. Essentially, the ML is a suspension of microorganisms that are metabolizing the organic matter while utilizing DO and releasing carbon dioxide to produce new cell growth.

The air requirement is dependent upon the oxygen transfer rate from the diffused air bubbles to the ML and the utilization of the DO by the microorganisms. The oxygen transfer rate is chiefly dependent on the design of the aeration system. The rate of DO utilization is dependent upon the microorganism activity as it relates to organic loading, pH, temperature, aeration period, and availability of DO. The air requirements may be based on more than one parameter. These parameters are discussed in the following subsections.

4.5.1.1.1 *Cubic Feet of Air per Gallon Wastewater Treated*

The cubic feet of air required per gallon of wastewater treated is a significant function of the organic loading and microorganism activity. An increase in the air requirement could indicate an increase in organic loading or in increase in the microbe population and/or activity due to temperature increase or a favorable change in wastewater characteristics such as pH, nutrients, Food to Microorganism (F/M) ratio, etc. A decrease in the air requirement could indicate a decrease in organic loading or a decrease in the microbe population and/or activity due to a lower temperature or an adverse change in wastewater characteristics. The air requirement expressed as cubic feet of air per gallon wastewater treated is determined as follows:

The following information is needed to calculate the cubic feet of air per gallon of wastewater treated.

1. Total air to aeration basins, assume 1,140 cfm
2. Total influent flow, 0.7 mgd

Air applied per day, cu ft air/day = (air to aeration basins, cfm)/(min/day)

*Air applied per day, cu ft air/day = (1,142 cfm) * (1440 min/day) = 1,644,480 cu ft air/day*

Then the air requirement equals:

Air required, cu ft air/gal = (cubic ft air/day)/(total influent flow, gpd)

Air applied per day, cu ft air/gal = (1,644,480 cubic ft air/day) / (700,000 gpd)

Air applied per day, cu ft air/gal = 2.34 cu ft air/gal

4.5.1.1.2 *Cubic Feet of Air per Pound BOD or COD Removed*

The volume of air required per pound of BOD or chemical oxygen demand (COD) removed is extremely important since the demand for oxygen is a direct function of the microorganism activity. When evaluating air requirements, remember that the 5-day BOD and COD only reflect the carbonaceous portion of the organic loading and not the nitrogenous portion of the organic loading. The air requirements will be affected by the degree of nitrification as it relates to the nitrogenous strength of the organic loading. This parameter will also be provided in the computer printout based on the following calculation:

The following information is needed to calculate the air required per pound of BOD applied.

1. BOD applied, assume 1,401 lbs/day (or COD applied, lbs/day)
2. Air applied, assume 1,644,480 cu ft/day

Air required per pound of BOD applied, cu ft air/lb BOD = (Volume of air applied, CFD)/(BOD applied, lbs/day)

Air required per pound of BOD applied, cu ft air/lb BOD = (1,644,480 cubic ft air/day) / (1,401 lbs/day)

Air required per pound of BOD applied, cu ft air/lb BOD = 1,174 cu ft air/lb BOD

4.5.1.1.3 *Cubic Feet of Air Required Per Pound MLVSS*

The cubic feet of air required per day per pound of mixed liquor volatile suspended solids (MLVSS) is often used to review the demand for oxygen as it relates to microbiological activity. In addition, such factors as temperature, pH, availability of nutrients, aeration period, and organic loading (F/M ratio), all affect this relationship. The air requirement expressed as cubic feet of air per day per pound of MLVSS under aeration is determined as follows:

The following information is needed to calculate the cubic feet of air required per pound MLVSS.

1. MLVSS, assume 7,000 mg/L
2. Air applied, assume 1,644,480 cu ft/day
3. Number basins in operation, 2
4. Aeration basin volume, 0.236 MG each

Air required per pound of MLVSS, cu ft air/lb MLVSS = (Air applied, cu ft/day)/(No. of basins)(basin vol.) (lbs/gal) (MLVSS, mg/L)

Air required per pound of MLVSS, cu ft air/lb MLVSS = (1,644,480 cu ft/day)/ (2 basins)(0.236 mg)(8.34 lbs/gal)(7,000 mg/L) = 60 cu ft air/lb MLVSS

4.5.1.1.4 *Dissolved Oxygen*

The DO concentration in the aeration basins will be normally maintained between 1.0 and 3.0 mg/L. It is essential that a DO concentration greater than 1.0 mg/L be maintained in the aeration basins at all times to sustain adequate mixing and microorganism activity. If the DO concentration is allowed to drop below 1.0 mg/L, nitrifying microorganisms will become less active and possibly die off.

4.5.1.1.5 *Minimum Air Flow Rates*

It is recommended that the minimum air rate per basin be greater than 0.51 to ensure adequate mixing.

The minimum airflow rates for fouling are as follows:

- Tanks 1 and 2: (0.51 scfm/diffuser) x (407 diffusers/basin) = 207 scfm/basin

The minimum airflow rates for mixing are as follows:

- Tanks 1 and 2: (0.12 scfm/ft^2) x (90.25 ft x 20 ft) = 216 scfm/ft^2

4.5.1.2 <u>BOD and Suspended Solids Removal Efficiency</u>

The biological treatment process has been designed to remove 90 percent of the plant influent total suspended solids (TSS) or BOD when operated within the design parameters. The BOD removal efficiency is a very reliable indication of the process performance. If the BOD removal efficiency drops below the design performance, action should be taken to locate the reason for the decreased efficiency. Operational records, process control parameters, lab analysis, and wastewater characteristics should be reviewed and analyzed when trying to locate the problem. The information gained from the evaluation should be implemented into the operation of the unit process. The best practice when making operational changes is to make one change at a time with sufficient time (usually two weeks) between changes, for stabilization of the biological process.

The biological treatment process is also designed to produce an effluent having a TSS content of less than 20 mg/L when operated within the design loading parameters. Much of the plant effluent BOD will be directly related to the amount of TSS that have escaped with the membrane effluent flow. Careless operational procedures result in an increased plant effluent BOD. Hence, the evaluation of the unit process performance in regard to the TSS removal is valuable in improving both the TSS and BOD removals. An increase of the plant effluent TSS is definite indication that the process is not performing as it should. The process control parameters, operational records, and wastewater characteristics should be reviewed and analyzed to determine what action should be taken to restore the unit process performance.

The BOD and TSS removal efficiency is normally expressed as percentages. These two parameters will be included in the monthly computer printout and based on the following calculation:

1. Plant Influent TSS, assume 230 mg/L (or BOD)
2. Plant Effluent TSS, assume 14 mg/L (or BOD)

Percent removal of total suspended solids, % = ((Influent S.S. – effluent S.S.) /(Influent S.S.)) x (100%)

*Percent removal of suspended solids, % = ((230 mg/L - 14 mg/L)/(230 mg/L))*100% = 94 %*

4.5.1.3 Kinetic Parameters

An understanding of the activated sludge kinetic parameters is extremely important in their application for process control and when evaluating problems involving microorganism activity. This section is devoted to helping the operator understand how these kinetic parameters apply to their operation and how they are interrelated.

4.5.1.3.1 *SRT Control*

An operational control tool, which may be used successfully by the operator, is the SRT method. SRT is an approximation of the mean (average) length of time that a cell (microorganism) will reside in the aerated portion of the activated sludge process before being wasted from the MBR system. Due to the rapid sludge return rate in the MBR system and the minimal activity of the biomass when not under aeration, the time the activated sludge solids spend in the MBR system or in transit with the ML or RAS are not considered in the SRT calculation. Furthermore, the anoxic selector volume is typically ignored since the nitrifying bacteria are typically not active within this volume.

Influent solids to the activated sludge process are not similar to those within the activated sludge system. These influent solids are not involved in the calculation of the SRT. The equation for SRT is:

SRT, days = (Average Mass of Sludge in the Aeration Basins)) / (Average Mass of Sludge Removed Per Day)

As previously stated, it is necessary to experimentally determine the SRT that yields the highest quality effluent and process stability.

The following information is needed to calculate the SRT that yields the highest quality effluent and process stability.

1. MLSS, assume 8,540 mg/L
2. WAS, assume 14,540 mg/L
3. Number basins in operation, 2
4. Aerated portion volume of the aeration tank, 0.164 Million Gallons (MG) each

The following provides a sample SRT calculation:

1. Calculate pounds of suspended solids in the aerated portion of the aeration tanks

Pounds under aeartion, lbs = MLSS, mg/L x No. of basins x Aerated Volume, MG x 8.34, lbs/gal

Pounds under aeration, lbs = 8,540 mg/L x 2 x 0.164 MG x 8.34, lbs/gal = 23,361 lbs

2. Calculate pounds of suspended solids wasted from the activated sludge system

Pounds Wasted, lbs= TSS concentration in WAS, mg/L x WAS flow, mgd x 8.34

Pounds Wasted, lbs = 14,540 mg/L x 0.019 mgd x 8.34, lbs/gal = 2,304 lbs/day

3. Calculate pounds of suspended solids in the secondary effluent.

Pounds MBR Eff., lbs = TSS Conc. in effluent, mg/L x Sec. Eff. Flow, mgd x 8.34

Pounds MBR Eff., lbs = 10 mg/L x 0.7 mgd x 8.34, lbs/gal = 58 lbs/day

4. Calculate the SRT using the above values.

SRT, days = (under aeration, lbs) / (Wasted, lbs + MBR Eff., lbs)

SRT, days = (23,361 lbs) / (2,304 lbs/day + 58 lbs/day) = 10.4 days

4.5.1.3.2 *F/M Ratio*

The aeration basins are designed to operate within the F/M ratio range of 0.05 to 0.1 lbs BOD applied per lb MLVSS under aeration. It is normally accepted that the MLVSS roughly represents the microbial mass with the cell synthesis in proportion to the available food. The F/M ratio is a direct function of the cell growth rate with the food supply as the limiting factor.

The higher F/M ratio will usually yield a greater cell growth rate. It is preferable that the F/M ratio be maintained at such a level that the microorganisms will progress into a period of low metabolic activity within the membrane system to provide a better floc formation and separation for a better quality effluent. In short, high microbe activity does not facilitate good floc formation and separation.

The optimum F/M ratio will have to be selected during actual operation on the basis of the process performance. The operator should periodically review and compare lab results indicating the secondary effluent BOD and suspended solids, and oxidation of ammonia to nitrate (degree of nitrification) in selecting the F/M ratio that produces the best performance.

A word of caution: allow time (minimum of two weeks) between each process change for the system to stabilize prior to evaluating its effect.

Since it takes five days to obtain the results of the BOD test, it is recommended that a COD test be utilized to determine the F/M ratio. The COD values will run considerably higher than the BOD values which will result in an F/M ratio based on COD greater than it would be for BOD. The actual relationship between BOD and COD will have to be determined during actual operation. It is anticipated that F/M ratios expressed as lbs COD applied per day per lb of MLVSS under aeration will be in the range of 0.3 to 0.5.

The following information is needed to calculate the F/M ratio.

1. Plant Influent flow, assume 0.7 mgd
2. Plant Influent BOD, assume 240 mg/L
3. MLVSS under aeration, assume 7,000 mg/L
4. Aeration basin volumes (2), 0.47 mg

The pounds of BOD (or COD) applied per day is determined as follows:

*BOD, lbs/day = (Plant Flow, mgd) * (Influent BOD, mg/L)* (8.34, lbs/gal)*

*BOD, lbs/day = (0.7 mgd) * (240 mg/L)* (8.34 lbs/gal) = 1,401 lbs/day*

The pounds of MLVSS under aeration is determined as follows:

*BOD, lbs/day = (aer. Volume, mg) * (MLVSS, mg/L) * (lbs/gal)*

*BOD, lbs/day = (0.47 mg) * (7,000 mg/L) * (8.34 lbs/gal) = 27,439 lbs/day*

The F/M ratio is determined as follows:

F/M Ratio = (BOD or COD, lbs/day) / (MLVSS, lbs)

F/M Ratio = (1,401 lbs/day) / (27,439 lbs) = 0.05 lb BOD/lb MLVSS/day

4.5.1.4 Nitrogen Removal

The various forms of nitrogen encountered in wastewater are as follows:

- Ammonia, NH_3 (sometimes also written as NH_4+; the distinction is not important).
- Organic nitrogen.
- Nitrite, NO_2-.
- Nitrate, NO_3-.

These nitrogen species are commonly expressed in terms of the amount of nitrogen present in each, such as ammonia-nitrogen (NH_3^-N), organic N, NO_2^-N, and NO_3^-N. Nitrogen may also be expressed as:

- Total Nitrogen, which includes all of the above forms of nitrogen.
- Total Kjeldahl Nitrogen (TKN), which expresses the sum of NH_3-N and organic nitrogen.
- Total Inorganic Nitrogen (TIN), which is the sum of all forms of nitrogen except organic nitrogen:

$$TIN = NH_3\text{-}N + NO_2\text{-}N + NO_3\text{-}N$$

Nitrogen enters the treatment process mainly in the forms of ammonia and organic nitrogen. Process influent nitrogen may be measured by the TKN test. TKN represents the great majority of the nitrogen present in influent raw wastewater. NO_3^-N may be present in in-plant recycle streams. The TKN test does not show the nitrate content in the sample. Separate tests should be done to measure the nitrate content of aeration tank influent.

The organic nitrogen present in the influent wastewater is converted to ammonia in the treatment process, so that influent nitrogen may simply be looked upon as if it were all in the form of ammonia. Some nitrogen (typically about one-fifth of the total entering TKN) is incorporated into the sludge. Depending on operating conditions discussed below, the remaining nitrogen may be subject to nitrification, as well as some degree of denitrification.

4.5.1.4.1 *Nitrification*

In this process step, nitrifying microorganisms (Nitrosomonas and Nitrobacter) convert ammonia to nitrite, and then to nitrate. The process reactions are shown as follows:

Nitrosomonas

$NH_3^+ + 1.5\ O_2$ =======> $NO_2^- + 2H^+ + H_2O$

Ammonia + oxygen =======> Nitrite + acidity + water

Nitrobacter

$NO_2^- + 0.5\ O_2$ =======> NO_3^-

Nitrite + oxygen =======> Nitrate

Requirements for nitrification are:

1. The presence of oxygen.
2. A sufficiently long SRT to allow the nitrifying organisms to grow and flourish in the ML.

The SRT required for nitrification is higher than SRT values commonly used for carbonaceous BOD removal. Nitrification requires that a selected minimum SRT must be maintained in the process. The selection of an appropriate target SRT is discussed in a later section. Options available for increasing the SRT, when desired, include increasing the ML concentration or increasing the volume of tankage under aeration.

The characteristic of nitrifying operation is that NH_3^-N in the effluent is reduced to a low value, typically less than 1 mg/L.

4.5.1.4.2 *Denitrification*

The anoxic zones in the aeration tanks are designed for removal of nitrate through the process of denitrification. Denitrification is similar to activated-sludge BOD removal, except that the process occurs in the absence of Do. As a result, the microorganisms are forced to

use the oxygen contained in the NO_3^- molecule as their oxygen source. When the oxygen part is stripped off, the leftover N is released as nitrogen gas, which bubbles out of the ML and is released to the atmosphere. The reaction is schematically represented as follows:

Microorganisms

$$BOD + NO_3^- + H^+ \text{ ========> } CO_2 + H_2O + \text{more microorganisms} + N_2 \text{ (gas)}$$

Many of the bacteria present in normal activated sludge can shift between using either oxygen or nitrate as an oxygen source. Denitrification is performed by these microorganisms. Note that half the acidity produced during nitrification is consumed during denitrification. Requirements for denitrification to proceed are:

1. A source of easily biodegradable BOD.
2. Nitrate, to serve as the substitute oxygen source.
3. An un-aerated zone, in which no oxygen is supplied (or where the DO concentration is kept low).

The anoxic zones receive nitrate from the RAS, the membrane recycle, or the upstream aerobic zones in the aeration tank. All anoxic zones have been set up to receive headworks effluent as a source of easily biodegradable BOD.

In all cases, the ML passes through an aerobic zone before leaving the aeration basin. As nitrification occurs in these zones, very low effluent ammonia concentrations can be achieved, but there will always be some nitrate in the effluent.

4.5.2 Microscopic Analysis of MLSS

Microscopic examination of the MLSS can be a significant aid in the evaluation of the activated sludge process. Various microorganisms within the sludge floc can rapidly indicate good or poor treatment. The most important of these microorganisms are the heterotropic and autotrophic bacteria, which are responsible for purifying the wastewater. In addition, protozoa play an important role in clarifying the wastewater and act as indicators to evaluate treatment efficiency. Rotifers also act as indicators of a fairly stable effluent.

A good stable activated sludge can be expected when there is a predominance of protozoa (ciliates) and rotifers in the MLSS. Efficiency of the treatment process during this condition, with proper RAS, WAS, and aeration rates, can be expected to produce effluent BOD concentrations of about 10 mg/L.

Conversely, a predominance of filamentous organisms and limited ciliate is characteristic of a poor quality activated sludge. This condition is commonly associated with poor settling sludge or bulking sludge. The sludge floc is usually light and fluffy due to having a low density. There are many other organisms such as nematodes (worms) and waterborne

insect larvae, which may be found, however, these do not significantly affect the quality of treatment.

The microorganisms that are important are the protozoa and rotifers. Protozoa ingest food matter that is either alive or dead. Basically, the operator should be concerned with three groups of protozoa, each of which have significance in the treatment of wastewater. These groups include the following:

1. Amoeboids
2. Flagellates
3. Ciliates

4.5.2.1 Ameoboids

The organisms in this group are commonly referred to as having false feet. Their cell membranes are extremely flexible. Mobility of these organisms is created by the movement of protoplasm within the cell in the direction it wishes to move. Food matter is ingested by absorption through the cell membrane. Amoeboids usually predominate in the MLSS flow during start-up periods of the activated sludge process or when the process is recovering from an upset condition.

4.5.2.2 Flagellates

These organisms are characterized by the tail (flagella) that extends from their round or elliptical cell configuration. Their mobility is created by a whipping motion of the tail, which allows them to move with somewhat of a corkscrew motion. Food consumption is by absorption. Flagellates usually predominate with a light dispersed MLSS floc when the population of bacteria is low and the organic load (BOD) to the treatment process is high. As a more dense sludge floc develops, the flagellate predominance will decrease with an increase of bacteria. The flagellates are not able to compete for the available food supply and therefore decrease to the point of no significance.

4.5.2.3 Ciliates

These organisms are characterized by the rotating type hairs (cilia) that cover all or part of their cell membrane. Their mobility is created by the movement of the cilia and the cilia around the gullet are utilized for the intake of food.

Ciliates usually predominate during the period of fair to good settling of the activated sludge.

They are considerable larger than flagellates and for purposes of microscopic examination may be classified into two basic groups. These include the free swimming and stalked ciliates.

4.5.2.3.1 *Free Swimming Ciliates*

Free swimming ciliates are usually apparent when there is a large number of bacteria in the activated sludge. These organisms feed on the bacteria and essentially polish or clarify the effluent to an acceptable level of treatment. Therefore, they indicate that the process is approaching an optimum level of treatment. A relative predominance of flagellates and free swimmers will indicate low treatment efficiency and the mean cell residence time (MCRT) of the system should be increased to maintain a relative predominance of free swimmers, stalked ciliates, and higher forms of organisms such as rotifers.

4.5.2.3.2 *Stalked Ciliates*

These organisms are usually present when the free swimmers are unable to compete for the available food. A relative predominance of these organisms along with rotifers will indicate a stable and efficiently operating process.

4.5.2.4 Evaluation of Microscopic Examination

Observation of the microorganism activity in the activated sludge can provide guidance in making process control adjustments. The decline of ciliates and rotifers is indicative of poor settling sludge. The advantage of this observation indicates the possibility of a change in organic or chemical loading before an upset occurs. This can be confirmed further by observation of the settling characteristics of the MLSS in the 30-minute settling test. In this particular example, process control adjustments to increase the MCRT by decreasing the WAS rate should be made. The F/M loading on the process will be fixed relative to the control adjustment made.

In summary, relative predominance of ciliates and rotifers are an indication of bacterial activity. This predominance is associated with the efficiency of treatment under various loading conditions. An increase or decrease of these organisms is indicative of a process upset prior to affecting bacterial activity. These organisms are more susceptible of being easily affected by toxicity and erratic load changes.

4.5.2.4.1 *Microscopic Examination*

When performing a microscopic examination of activated sludge, a sheet of paper should be kept handy to sketch the types observed. In the event of unknown varieties, these may be identified later. The objective of the examination is to determine the relative predominance of microorganisms.

Examination Procedures:

1. Record the date, time, temperature, and location of the sample on the worksheet.
2. A minimum of three slides per sample should be examined.
3. Scan each slide and count the number of microorganisms in each group.

4. Provide a mark for each microorganism counted in the appropriate group space on the worksheet.
5. After completing the examination of three slides, total the number of organisms counted in each group.
6. The three higher totals are interpreted as the predominating organisms.

Microscopic examinations of the activated sludge should be made on a daily basis during peak flow periods. If a consistent trend of predominating organisms is established during normal operating conditions, the frequency of examinations may be decreased to three times per week.

4.5.3 Process Control

4.5.3.1 Process Configuration

The compartmentalized structure of the activated sludge treatment tanks make it possible for operations personnel to attain varying levels of DO inside each zone to achieve denitrification and nitrification inside the zones for removal of nitrogen. In Aeration Tanks 1 and 2, Zones 1 and 2 are anoxic zones where denitrification will occur reducing the nitrate present in the wastewater in the form of nitrogen gas.

Anoxic Zones: The anoxic zones at the head of each aeration tank are intended for removal of nitrate through denitrification. The influent mixed with RAS flows into the south end of each of these zones. The aeration tanks receive membrane recycle from the downstream membrane bioreactor with a very high MLSS concentration and fine screened influent from the headworks. The high MLSS of the membrane recycle allows for the operation of these tanks at a much higher loading rate.

The aeration tanks operate in parallel. However, the zones within the aeration tanks operate in series and have a step feed flow configuration, with anoxic and aerobic zones placed sequentially to achieve nitrogen removal. The anoxic zones receive nitrate from the membrane recycle (i.e., RAS). Since nitrate is a soluble species, it is not removed by the filtration process in the MBR system and would be present in the MBR filtrate at the same concentration as in the membrane recycle. In the anoxic zones, the nitrate recycled back with the RAS is converted to nitrogen gas. The ammonia undergoes nitrification in the subsequent aeration zones.

Aerobic Zones: The aerobic zones should be operated under fully aerobic conditions, with a target DO concentration of 1.0 to 2.0 mg/L. If it proves difficult at times to maintain DO at this value without overloading the diffusers in these zones, or if high BOD removal limits denitrification, a lower target DO may be used. Typically, this will happen during warm weather when the blowers are less efficient. During such warm weather, all microbial growth rates would be high and a lower DO can be tolerated.

4.5.4 Process Calculations

The biological treatment process have been provided with definite loading parameters as criteria for design and operation. Operation within these control parameters is essential to achieve peak design performance. However, the parameters presented in this manual are not intended to surpass actual operating experience. It is imperative that each unit process be operated at a high level of performance to ensure that the quality of the final effluent meets the waste discharge requirements imposed by the San Francisco Regional Water Quality Control Board.

The controlling parameters of the activated sludge process include the quantity of air supplied, rate of RAS, and the amount of excess activated sludge wasted from the system. These parameters dictate the MCRT and F/M loading ratio within the process.

The laboratory tests required for control of this process as well as to evaluate its performance are as follows:

1. DO content of ML under aeration.
2. MLSS and MLVSS.
3. Influent and effluent BOD.
4. Influent and effluent suspended solids.
5. Nitrogen tests – ammonia, nitrite, and nitrate.
6. Microscopic examination of activated sludge.
7. RAS total and VSS.
8. WAS total and VSS.
9. Temperature.
10. pH.
11. Nutrients such as nitrogen and phosphorous.
12. Influent and effluent COD.

Procedures for performing these tests may be found in the latest edition of “Standard Methods for the Examination of Water and Wastewater, APHA, AWWA, and WPCF.”

4.5.4.1 <u>Aeration Basins</u>

The criteria for design and sizing of the aeration basins is based on providing a 10.4-day MCRT for nitrification with a MLVSS concentration in the range of 7,000 to 7,700 mg/L.

4.5.4.1.1 *Detention Time*

Inadequate detention time in the aeration basins may result in reduced microbiological activity, which is vital to the activated sludge process. The overall performance of the

process would be unsatisfactory and would create additional loading on the subsequent treatment process, which will result in a poor quality final effluent.

The two aeration basins will provide a detention time of 4.7 and 2.1 hours at average dry weather flow (0.7 mgd + 400 percent RAS) and maximum week wet season flow (0.7 mgd + 400 percent RAS), respectively.

Example Calculation:

The aeration basin detention time may be determined as follows:

Data Required:

1. Aeration basin volume (each) = 236,000 gal
2. Plant Flow = 0.7 mgd
3. Total RAS flow rate = 3.5 mgd
4. Basins in service = 2

Determine the total volume of the aeration basins.

Total aeration volume, gallons = (No. of basins)(gallons/basin)

Total aeration volume, gallons = (2)(236,00) = 472,000 gallons or 0.472 mg

Determine the total influent flow to aeration basins.

Total influent flow, mgd = Plant Influent Flow + RAS flow

Total influent flow, mgd = 0.7 mgd + 3.5 mgd = 4.2 mgd

Determine the aeration detention time.

Detention time, hrs = ((Aeration volume, mg)(24 hrs/day)) / (Total Influent flow, mg)

Detention time, hrs = ((0.472 mg)(24 hrs/day)) / (4.2 mg) = 2.7 hours

4.5.4.1.2 *Air Requirements*

The aeration system has been designed for an air requirement of approximately 1,600 scfm at maximum daily design flow (maximum week wet season flow).

The air requirement is dependent upon the oxygen transfer rate and the DO utilization by the microorganisms in the activated sludge. The DO utilization is a function of the BOD loading (F/M ratio), aeration period, and temperature. The diffused air system also provides a vigorous mixing of the tank contents while maintaining the aerobic conditions required to sustain the desired microbiological activity. Generally, a minimum of 0.12 cubic feet of air

per minute will be required per square foot of aeration basin in service to ensure adequate mixing.

In the auto mode, the air flow to the individual aeration basins will be automatically controlled on the basis of DO content that is measured by a DO probe assembly strategically located in each basin. It is recommended that the DO level in each aeration basin be maintained in the range of 1-3 mg/L. The average DO level should be maintained at about 2 mg/L.

Example Calculation:

Occasionally it may be necessary for the operator to determine the air requirements for each aeration basin. This will be especially true whenever it becomes necessary to operate the aeration system manually.

The preferred method of determining air requirements include the cubic feet of air required per pound of COD applied (Plant Influent COD) to the activated sludge process. The COD applied should be based on a five-day moving average concentration. An alternate method would include the cubic feet of air required per pound of BOD applied. This method, however, is not preferred because the BOD test result requires five days to obtain. Therefore, the COD method is recommended over the BOD method since the test result may be obtained within a few hours.

The total blower output rate and air rate to each aeration basin based on COD may be determined as follows. The BOD method is determined in the manner by substituting BOD for COD in the calculations.

Data Required:

1. Plant influent flow = 0.7 mgd
2. Influent BOD = 240 mg/L
3. Air applied = 1,174 Cubic feet air/lb BOD
4. Basins in operation = 2

Determine total blower air output.

Air, ft^3/min =(Flow mgd)(COD mg/L)(air, ft^3/lb BOD)(lbs/gal) / (min/day)

Air, ft^3/min =((0.7 mgd)(240 mg/L)(1,174 ft^3/lb BOD)(8.34 lbs/gal))/(1440 min/day) = 1,142 ft^3/min

NOTE: This would require the operation of one blower.

Determine air rate to each aeration basin.

Air, ft^3/min =(Total Blower Output)/(No Basin In Service)

Air, ft^3/min =(1,142 ft^3/min) / (2 basins) = 571 ft^3/min

NOTE: These calculations determine air rates for the aeration basins only.

4.5.4.1.3 *Organic Loading*

The aeration basins are designed to operate within a MLVSS concentration range of 7,000-7,700 mg/L with an MCRT range of 10-15 days and F/M ratio range of 0.17-0.22 lbs BOD/lb MLVSS/day. The F/M ratio used in this manual is defined as the lbs BOD applied to the aeration tanks per day/lb of MLVSS in the aeration basins. The F/M ratio is an expression of the metabolic state of the biological system; therefore, it should be used as the organic loading parameter (lbs BOD/lb MLVSS) as opposed to a BOD loading per aeration volume (lbs BOD/1000 ft^3). When operators load aeration basins on the basis of the BOD test, the results are not available for 5 days. For some plants, the ratio of BOD to COD (BOD/COD) remains fairly constant. This ratio can be established with historical data and checked periodically. Once an average range is determined, the BOD can be estimated for process control from the COD results. COD test for process control are recommended because test results are available within four hours and so process changes are made faster. The F/M ratio may be determined as followed:

Example Calculation:

Data Required:

1. Aeration Volume (2 tanks) = 0.472 mg
2. MLVSS under aeration = 7,000 mg/L
3. Plant Influent flow = 0.7 mgd
4. Plant Influent BOD = 240 mg/L Or, the COD and the plant typical BOD to COD ratio.

Determine organic loading (F/M ratio)

F/M = (Flow, mgd)(lbs/gal)(BOD, mg/L) / (Aer. Vol., mg)(lbs/gal)(MLVSS, mg/L)

F/M = (0.7 mgd)(8.34 lbs/gal)(240 mg/L) (0.472 mg)(8.34 lbs/gal)(7,000 mg/L) = 0.05

4.5.4.2 <u>Wasting Rate Control</u>

To maintain the SRT at a desired number of days, a wasting rate must be determined. The pounds of microorganisms removed from the activated sludge system (WAS plus effluent TSS) must match the rate at which new cells are produced in order for steady state conditions to occur. The rate at which new cells are produced is termed the observed yield, which is typically expressed in pounds of cells produced per pound of influent BOD_5 oxidized. The observed yield will vary with SRT due to endogenous decay, individual plant parameters, and microbiological population. For example, the observed yield due at an SRT of two days may be as high as 0.9 lbs TSS/lb BOD_5 removed, while an SRT of 15 days at

the same plant may produce an observed yield as low as 0.5 lbs TSS/lb BOD_5 removed. The observed yield must be determined based on plant operational experience.

Example Calculation:

Data Required:

1. Aerated portion volume of the aeration tank, 0.164 MG each
2. Basins in operation, 2
3. Target SRT = 10.4 days
4. Secondary effluent flow= 0.7 mgd
5. MLSS, assume 8,540 mg/L
6. RAS, assume 14,540 mg/L

Determine the pounds of MLSS under aeration.

MLSS, lbs = (No. Aeration Basins) x (Aerated Volume, mg) x (lbs/gal) x (MLSS, mg/L)

MLSS, lbs = (2 Basins) x (0.164 mg) x (8.34 lbs/gal) x (8,540 mg/L) = 23,361 lbs

Determine the pounds of TSS to be pumped.

Waste TSS, lbs/day = MLSS, lbs / MCRT, days

Waste TSS, lbs/day = (23,361 lbs) / (10.4 days) = 2,246 lbs/day

Determine the volume of WAS to be wasted per day.

WAS, mgd = (WAS, lbs/day) / ((lbs/gal)(RAS SS, mg/L))

WAS, mgd = (2,246 lbs/day) / ((8.34 lbs/gal)(14,540 mg/L)) = 0.0185 mgd

WAS, gpm = ((0.0185 mgd) x (1,000,000 gallons)) / (1,440 min/day) = 13 gpm

After determining the volume of sludge that must be wasted per day, the waste sludge setpoint for the WAS valve must be set to waste the required volume. The procedures for setting the WAS valve timer are as follows:

Waste Valve Setpoint, min/day = (Waste volume, gpd) / (WAS setpoint rate, gpm)

Waste Valve Setpoint, min/day = (18,524 gpd) / (100 gpm) = 185 min/day

or

Waste Valve Time @ 100 gpm, hours/day = (185 min/day) / (1hour/60min) = 3.1 hours/day

The normal range of SRT for a nitrifying activated sludge process is 6 to 10 days, depending on wastewater temperature. Decreased sludge wasting will result in increased SRT. For any particular plant, it is necessary to determine the SRT that yields the highest quality effluent and process stability. Calculate the SRT daily.

4.5.4.3 F/M Ratio Control

Another method of control is the use of the F/M. The F/M ratio is based upon the substrate (food) provided each day to the microorganism mass in the aeration tanks. Substrate provided is normally measured by the BOD_5 of the influent. When operators calculate the F/M based on the BOD_5 test, the results are not available for five days. For some plants, the ratio of BOD_5 to COD (BOD_5/COD) remains fairly constant. This ratio can be established with historical data and checked periodically. Once an average range is determined, the BOD_5 can be estimated for process control based on the COD results, which can be made available within four hours. Process changes can be made faster utilizing COD data, providing better control.

The following information is needed to calculate the F/M.

1. Average BOD_5 of the plant influent, assume 240 mg/L
2. MLVSS, assume 7,000 mg/L
3. Average daily flow, assume 0.7 mgd
4. Target F/M, assume 0.13 lbs BOD_5/day per lbs MLVSS in aeration.

Use the following procedure to calculate the MLVSS to keep in the aeration tank. The following information is required for the calculation:

1. Find the pounds of BOD_5 entering the aeration tanks/day.

Loading, lbs BOD_5/day = Infl. BOD_5 Conc. (mg/L) x Plant Flow (mgd) x 8.34

Loading, lbs BOD_5/day = 240 mg/L x 0.7 mgd x 8.34 = 1,401 lbs/day

2. Find the desired pounds of MVLSS under aeration.

MLVSS, lbs = (Infl BOD_5, lbs/day) / (F/M, lbs BOD_5/day/lb MLSS)

MLVSS, lbs = (1,401 lbs/day) / (0.13 lbs BOD_5/day/lb MLVSS) = 14,011 lbs

3. Find the desired concentration of MLSS under aeration.

MLVSS, mg/L = (MLSS, lbs) / (Vol, MG x 8.34)

MLVSS, mg/L = (14011, lbs) / (0.7, MG x 8.34, lbs/gal) = 1,200 mg/L

If the COD or BOD_5 load applied to the aeration tanks increases or drops to a significantly different level for two consecutive days, calculate a new ML solids value and adjust the activated sludge wasting.

The normal range of F/M ratio for a nitrifying activated sludge process is 0.15 to 0.25 lb BOD_5/day/ lb MLSS under aeration. It is necessary to experimentally determine the F/M ratio that yields the highest quality effluent and process stability. Calculate the F/M ratio daily. Also, aeration tank suspended solids (MLSS) should be evaluated daily as an indication of process stability.

4.5.5 Process Control

The following section presents general rules for operating the activated sludge process. The basic objectives in controlling the process are to achieve the following:

1. Maintain DO concentrations in the aerobic zones generally between 1 and 3 mg/L. (There should be a balance among BOD, NH_3, and NO_3^- removal. This may require adjustment to the target DO concentration)
2. Control the returned ML flow rate to maintain adequate MLSS population of 10,000 mg/L in the aeration tanks and 15,000 mg/L in the SST.
3. Determine and maintain the proper SRT and sludge-wasting rate.

These issues are discussed in this section. Principles of operation for the partitioned zones within the tanks are also presented.

4.5.6 Dissolved Oxygen Control

A DO level averaging 2 mg/L (typically, 1 to 3 mg/L) should be maintained in the aerobic compartments of the Aeration Tank.

Air is added to the aeration tanks to maintain aerobic conditions and to keep the ML in suspension. Oxygen is transferred from the air into the water for use by the activated sludge microorganisms. DO in the aeration tanks should be maintained at an average level of approximately 2 mg/L, adjusted for optimum BOD and nitrogen removal.

By monitoring the DO, the number of air blowers in service and the air control valves can be adjusted to maintain the desired DO levels in the aeration tanks. By supplying only the horsepower needed to meet the oxygen demands of the system, the energy costs to operate the aeration system can be minimized.

A DO profile for each aeration tank should be run once per month to check for an adequate distribution of oxygen throughout the basin. Include different times of day, different days, and months, to check the effect of varying flows and loading rates. To do a DO profile, a portable DO meter with a 10- to 20-foot cord on the probe, marked in 1-foot intervals, and attached to a long pole, is required. The DO should be tested at selected points across both the length and width of the basin. For each point, measure the DO at a depth of two to three feet. Plotting the measurements along the length and width of the tanks will help make the conditions in the tanks easier to visualize. The ideal DO profile should have approximately the same DO values (1 to 3 mg/L) throughout the basin. Changes to the DO profile should

be made, as needed, by adjusting the drop leg valves to each aeration grid. An hourly DO profile should be prepared once per quarter.

4.5.7 RAS Flow Rate

The purpose of the RAS stream is to remove sludge from the MBRs and return it to the aeration tanks. The appropriate sludge return rate is based on maintaining three operational parameters: (1) a MLSS concentration of 10,000 mg/L in the aeration tanks; (2) a MLSS concentration of 15,000 mg/L in the SST; and (3) a membrane flux less than 17 gallons per square foot per day (GFD).

The control strategy is simply to adjust the RAS flow rate by adjusting the WAS control valve to maintain a MLSS concentration of 10,000 mg/L and 15,000 mg/L in aeration tanks and SST, respectively. RAS flow rate is not set at a specific value, rather the operator will input the amount of flow to waste at the OIS (please refer to Section 4.4.8 RAS/WAS System).

4.5.8 Sludge Wasting Rate Control and SRT Control

There are several common methods for determining how much activated sludge to waste. These include techniques based on MLSS concentration and on SRT. Each is discussed briefly here.

1. MLSS Control: In this method the MLSS concentration in the aeration tanks and SST, is maintained at a constant approximate value of 10,000 mg/L and 15,000 mg/L, respectively.

2. SRT Control: The Solids Retention Time, SRT, is considered by many to be the best tool for process control. It provides direct control of the types of microorganisms that predominate in the activated sludge. The SRT expresses the number of days the average microorganism remains in the process before being wasted or lost in the secondary effluent. For example, if the aeration tank contains 20,000 lbs of solids and 5,000 lb/day of solids is wasted, one-fourth of the solids inventory is wasted each day. This allows the average solids particle to reside in the process for four days before being wasted or lost. Some will be wasted or lost sooner, some will remain longer. Four days represents the average solids retention time, in this example.

   The information needed to determine SRT are the solids concentrations of the ML, the wasted sludge, and the process effluent.

4.5.8.1 SRT Control

SRT is defined mathematically as:

$$\text{SRT} = \frac{\text{Average Mass of Sludge in the Aeration Basins}}{\text{Average Mass of Sludge Removed Per Day}} \qquad 4.1$$

The SRT definition provides a guide to controlling the SRT at a selected target value. The mass of sludge removed per day consists of the sludge in the waste stream, plus a smaller amount contained in the effluent suspended solids. SRT may be written as:

$$SRT = \frac{VX}{Q_w X_w + QX_e} \qquad 4.2$$

where

V	=	Combined volume of all aeration tanks in service, mil gal
X	=	Average MLSS concentration in aeration tanks, mg/L
Q_w	=	Waste activated sludge (WAS) flow rate, mgd
X_w	=	TSS concentration in WAS, mg/L
Q	=	Influent (or effluent) flow rate, mgd
X_e	=	Total suspended solids (TSS) concentration in secondary effluent, mg/L

In a step feed process, where the MLSS varies significantly through the process, it would be necessary to make a better estimate of the total sludge inventory than to simply use an average MLSS concentration. It is recommended that the following substitution be made in equation 4.2.

$$VX = V_4 X_4 + V_5 X_5 + V_6 X_6 \qquad 4.3$$

where

V_n	=	Volume of Section n, mil gal
X_n	=	Average MLSS concentration in Section n, mg/L

Having selected a desired target value for SRT, the process may be controlled at this value by regulating the waste sludge stream, Q_w. From the above expression, the volume of sludge to be wasted daily may be calculated as:

$Q_w = (VX / \{SRT_{Target}\} - QX_e)(1/X_w)$

$$Q_w < \frac{1}{X_w} = \frac{VX}{SRT_{Target} - QX_e} \qquad 4.4$$

where SRT_{Target} = the desired SRT value and equation 4.3 can again be substituted for V X.

All sludge quantities are expressed as TSS. TSS includes both volatile organic material (VSS) and non-volatile inorganic material.

The required sludge wastage rate should be recalculated every day and the wastage rate adjusted accordingly. Because suspended solids measurements tend to vary appreciably, the sludge wastage rate for any one-day should not be changed more than 10 percent from the previous day's value

4.5.8.2 Selection of Target SRT

The DVI New WWTP activated sludge process has been designed to treat carbonaceous pollutants (BOD) with nitrification for removal of ammonia, and denitrification for removal of nitrate, thus achieving nitrogen removal. Nitrification converts ammonia in the wastewater to nitrate, using additional oxygen, while denitrification converts the nitrate so produced to nitrogen gas in the absence of oxygen.

SRT is an important process variable because it controls which microorganisms will grow and proliferate in the activated sludge. Nitrifying microorganisms, for example, are slow growers. If solids retention time is kept low, nitrifiers would be removed in the waste sludge at a faster rate than new nitrifiers can grow to replace them. Nitrifier growth rate also depends on DO concentration. Thus, it is crucial that the proper SRT be maintained and sufficient oxygen provided inside the reactors to prevent a washout of nitrifiers.

SRT control relies not so much on selecting a particular value for SRT; rather, it relies more on deciding whether it is necessary to increase or decrease it, or to keep it the same. The target value for SRT should always be moved gradually, in small increments. This is because biological systems do not react quickly. Changes in operation should be monitored over several days to see their effect.

A number of guidelines are available to indicate the direction in which target SRT should be moved (note that the guidelines presented here apply specifically to a nitrifying activated sludge process). The guidelines are based on:

- Nitrification Indicators
- Color of Foam
- Microscopic examination
- Temperature

All of these indicators should be used together, to form an opinion as to whether target SRT should be changed (increased or decreased), or remain the same.

Nitrification Indicators: After initially selecting a target value for SRT (typically, seven days may be used), the target SRT may subsequently be varied up or down in response to process observations. An important requirement is that the process must remain in a nitrifying condition. This would be demonstrated by effluent ammonia values remaining below one mg/L. Higher values may indicate that DO concentrations have been allowed to decrease below the minimum of one to two mg/L or that the SRT has drifted too low and should be increased.

High nitrate values in the aerobic zones inside the aeration tanks are a confirmation that nitrification is taking place. However, the effluent from the east aeration tanks should be low

in nitrate since sequential placement of aerobic and anoxic zones ensures that nitrate formed in aerobic zones is removed by denitrification in anoxic zones (see Section 4.4.2 for flow paths through the basin). The effluent from the west aeration basin would have a relatively higher concentration of nitrate. Nitrite concentrations should generally be relatively low (less than 0.5 mg/L). Rising nitrite values provide a warning that some process condition may be affecting the health of the nitrification process, or that the target SRT should be raised.

Another good sign of nitrification is if the wastewater alkalinity drops by more than 40 mg/L (as $CaCO_3$) across the activated sludge process. If any of the above indicators suggest that nitrification is not taking place, the target SRT should be increased to allow the nitrifying organisms to grow inside the aeration tanks.

Color of Foam: A moderate amount of foam on the aeration tanks, of a dark tan color, is most appropriate for a nitrifying activated sludge process. A crisp white or light tan foam is an indication that the sludge is young, and the SRT target should be increased.

Microscopic Examination: Microscopic examination of the activated sludge should be conducted on a regular basis. The presence of substantial numbers of stalked ciliates in the activated sludge mass represents a good microbiological population. Excessive numbers of free swimmers indicates a young sludge (target SRT should be increased).

Microscopic examination also allows evaluation of the amount of filaments present in the sludge. While filaments are not specifically connected to SRT control, the presence of many filaments extending beyond the floc would suggest that the sludge may be in a bulking condition. For procedures to combat bulking sludge conditions, refer to the Troubleshooting Guide.

Temperature: Since biological growth rate increases with temperature, it may be expected that target SRT values should be decreased during summer, when wastewater temperatures are relatively high, and increased during the winter.

4.6 NORMAL OPERATION PROCEDURES

This section describes the operation of the activated sludge processes after the systems have been started and are ready for normal operation. Startup/shutdown and safety check procedures are discussed in other sections of this chapter. In addition to the information presented, consult the equipment manufacturer's O&M manual for normal operating procedures and maintenance schedules.

4.6.1 Aeration Tanks

1. Every two hours, review the operating status of the aeration tank equipment and instruments at the OIS.

2. Daily, review operational logs of the activated sludge processes and laboratory reports for recent operating conditions including SRT, RAS, and WAS rates.
3. Daily, check that aeration tanks have uniform fine air bubble patterns throughout the tanks. Check for unusual odors around the tank that can suggest a change in influent constituents or strength.
4. Daily, collect headworks effluent, MLSS, and RAS samples from automatic samplers for process control analysis.
5. Daily, check that foam and scum are not building up or collecting in the tanks. Modify spray control and operation as required.
6. Lubricate aeration air valves per manufacturer's recommended maintenance schedule.
7. Lubricate sluice and weir gates per manufacturer's recommended maintenance schedule.
8. Weekly wash down walk surfaces, channels, and walls.
9. Weekly, check and calibrate DO meters and transmitters.
10. Weekly, check DO profile across aeration tank.
11. Annually, check and clean aeration tank membrane diffusers.
12. Annually, check and calibrate flow meters.

4.6.2 Aeration Blowers

1. Every two hours, review the operating status of the blowers and appurtenant equipment and instruments at the OIS.
2. Daily, review operational logs.
3. Daily, check lubrication system.
4. Check automatic oilers to see if refill is required.
5. Daily, check airflow split between aeration tanks. Adjust valves as necessary.
6. Weekly, check differential pressure across air filtration system.
7. Follow manufacturer’s instructions for equipment maintenance.

4.6.3 Membrane Bioreactor System

Refer to membrane manufacturer’s O&M manual for standard operating procedures.

4.6.4 RAS/WAS Systems

1. Every two hours, review the operating status of the RAS valves, WAS valves, and appurtenant equipment at the OIS.

2. Daily, review operational logs of the secondary process and laboratory reports for recent operating conditions including SRT, RAS, and WAS rates.
3. Check the MLSS values in the aeration tanks daily and determine correct WAS flows based on values obtained.
4. Lubricate and maintain RAS and WAS pump isolation valves per manufacturer's recommendations.
5. Annually, check and calibrate flow meters and transmitters on the RAS and WAS lines.

4.7 EMERGENCY OPERATION PROCEDURES

This section describes the operation of the secondary treatment process for the WWTP under emergency circumstances. Scenarios for different emergency conditions are given, followed by suggested corrective actions to be taken.

4.7.1 Power Outage

1. In the event of a power outage, after an adjustable time delay the emergency generator will start. The biological treatment process will re-start if placed in remote-automatic control. Once restarted, the equipment will resume operation at previous setpoints. Verify equipment has started properly.
2. After utility power has been restored and the plant is switched from standby to utility power, the equipment will once again restart if in remote-automatic mode. Verify equipment has started properly.
3. Equipment in local or remote-manual mode will require manual restart.

4.7.2 Equipment Malfunctions

1. Motors or pumps with excessive vibration, unusual noise, overheating, or lubrication leakage should be shutdown. The unit should not be operated until the reason for these unusual observations has been corrected.
2. Motors that shutdown due to current imbalance or over current should be taken out of service immediately. Either of these types of failures indicates serious problems that should be investigated by an electrician prior to restarting the equipment. Shutdowns of this nature are common during electrical problems and a single attempt to restart is justified in this situation.
3. Pumps with excessive packing or seal leakage can be operated as long as the leaking water does not travel close to electrical or instrumentation equipment. Correct the leakage as soon as time permits.

4.7.3 Unable to Meet Air Demand

1. Check for air leak in above ground piping.

2. Evaluate the capability of the process to continue treatment or shutdown for a temporary repair.

4.7.4 Unable to Meet Air Demand above a Single Aeration Grid

1. Check for air leak in piping in aeration tank. The leak may be evident because of large boils. If possible, shutdown the tank and begin the draining process. If shutdown is not possible, isolate the drop leg to the grid with the airline break and restrict the airflow and loading to the tank.

4.7.5 Excessive Foaming

1. If the foam is white and crisp check for an industrial discharge of soap. Run MBAS tests on influent composite and aeration tank samples. Increase MLSS concentration. Check influent loading to determine if process is significantly under loaded. Remove tanks from service to increase loading.
2. If the foam is brown and heavy check for a *Nocardia* outbreak. Start chlorinating foam at affected plant.

4.7.6 Plugging of Sludge Ports on RAS Removal System

1. With a high content of heavy compacted material, loosen this material manually.
2. When there is a low velocity in the withdrawal lines, try periodically increasing RAS flow rates to remove settled material.

4.7.7 Malfunctioning Pump

1. If alarm sounds, acknowledge and reset.
2. Stop and lockout the scum or sludge pump. Isolate the suction and discharge valves.
3. Open the suction manifold isolation valves to allow the standby pump to begin operation. Place standby pump in service.
4. Remove and repair the pump.

4.7.8 Malfunctioning Control System

1. Put the affected RAS or WAS pumps in local control and manually set the flow rate to the aeration process until repairs can be made.

4.8 STARTUP/SHUTDOWN PROCEDURES

This section outlines the pre-startup, startup, and shutdown procedures for each unit in the Secondary Treatment Facilities. It is important that the safety checks given in Pre-Startup are performed before startup of the respective unit processes and equipment. Refer to the equipment O&M manuals for specific information regarding lubrication and specific equipment checks.

Emergency circumstances frequently do not permit time to read a manual; therefore, it is imperative that the plant staff is trained and thoroughly familiar with all of the applicable safety procedures. Occupational safety depends on people knowing what to do and how to do the job correctly. If you do not know how to operate a specific piece of equipment, obtain assistance from an operator who has been trained and is fully qualified to operate that piece of equipment.

The selection of operational parameters and adjustments in process control should be made in the field by the operator based upon the response of the biological process. The parameters given herein are only intended as a guide until sufficient operating experience and data can be accumulated to base process control decisions upon.

4.8.1 Biological Treatment Process

4.8.1.1 Pre-Startup Procedures

1. Be sure all H-O-A switches, L-O-R switches, On-Off switches, etc., are turned “OFF.”
2. Check that all gratings and cover plates are properly placed.
3. Check that aeration effluent weir plates are at equal elevations and leveled.
4. Check operation of all gates and valves for smoothness of operation and seating in the closed position.
5. Remove all debris from basins and channels.
6. Position the influent stop gates and sluice gates for the desired mode of operation.
7. Check that diffusers are clear and air can flow freely.
8. Check that nozzle heads on the froth spray system are open and on securely.
9. At Aeration Tanks 1 and 2, check position of anoxic mixers and verify that there is no debris caught on mixer blades.

4.8.1.2 Startup

It is recommended, at initial plant startup, that the aeration basins be filled with clean water to facilitate checkout of the equipment. Thereafter, startup will be with a wastewater filled basin. It is suggested that startup be in the conventional mode. Startup of a tank at a later

date can be accomplished by using seed sludge from tanks already in full operation. The procedure would then be to discontinue wasting and return the excess activated sludge (by RAS system) to the tank being started-up. The loading to the tank would be controlled in ratio (F/M ratio) to the MLVSS until the MLVSS concentration in the tank is sufficient to handle the tank's equal share of the loading. When the MLVSS level is established, the excess activated sludge would be wasted to the digesters as normal.

4.8.1.2.1 *Aeration Tanks*

1. Remove "Do Not Operate" tags on the system.
2. Verify the tanks are clear of personnel and debris, and that all the aeration panels or blanks are installed.
3. Close the sluice gates (03-GAT-103 and 03-GAT-203).
4. Begin to fill the aeration tank(s) to 10 feet by using the foam control sprayers and hoses.
5. When the water surface covers the panels, initiate aeration of the basin at a low air rate to verify proper operation and to avoid clogging. (The procedure for blower startup and operation are given in Section 4.4.4.8.1)
6. Place anoxic mixer in Remote and start mixer when water is 10 feet above floor.
7. When water is 10 feet above diffusers, manually lower the weir gate(s) at the influent splitter box to bring the appropriate aeration tank online. Weir gates 03-GAT-100 and 03-GAT-200 to Aeration Tank Nos. 1 and 2, respectively.
8. Adjustment of the air flow to the individual channel diffusion units should be based on visual observation of the mixing action. The agitation should be sufficient to keep the wastewater solids in suspension.
9. Manually open the air flow control valve to introduce air pressure into the air header.
10. Open the moisture blow off valve to clear the header.
11. Visually check air distribution.
    a. The mixing and turbulence should be uniform. Air rising in masses over the location of the air blow-offs or the absence of turbulence is a portion of tank would indicate that the corresponding diffuser should be removed, inspected, and the problem corrected.
    b. The horizontal air headers must be situated in a level position to distribute the air uniformly.
    c. Normally, a minimum of 0.12 scfm per square foot of aeration tank area is required to provide adequate mixing.
12. Monitor DO in aeration tank and control air rates to maintain DO of at least 1.5 mg/L.
13. Maintain a DO in the range of 1.0 to 3.0 mg/L throughout the aeration tank aerobic zones. Using the portable DO probe, check the DO at locations throughout the tank

and make the necessary adjustments to header valves for a uniform distribution of air.

14. The sludge captured in the membrane system should be promptly returned to the aeration tanks. To determine the membrane system operation refer to Process Calculations, Section 4.5.4.

15. Do not begin wasting until the desired level of MLVSS is attained in the aeration tanks. The correct level of MLVSS can be determined by the F/M ratio. An F/M ratio in the range of 0.05 to 0.1 lb BOD/lb MLVSS is recommended until operating experience provides a more accurate value to work with. For an example calculation of F/M ratios, refer to Process Calculations, Section 4.5.4.

16. BOD and COD tests should be performed daily on composite samples of the intermediate effluent and the secondary effluent. It is important to know the strength of the plant inlfuent so that the MLSS concentration can be adjusted accordingly. The strength of the membrane effluent is important to evaluate the response of the process.

17. After the fifth day, the VSS test should be performed daily upon composite samples of the ML. The suspended solids probe of the 20-inch RAS pipe will be helpful in monitoring the day-by-day progress of the process.

18. Perform startup procedures for the WAS system when the MLVSS concentration provides the desired F/M ratio. F/M ratios of 0.05 – 0.1 for BOD and 0.09 – 0.18 for COD are initially recommended until the optimum parameters are determined by operating experience. The COD F/M is the recommended method of monitoring the F/M relationship due to the rapid availability of the COD test results. It is recommended that the wasting of excess activated sludge be controlled by the MCRT method, explained in Process Calculations, Section 4.5.4.

4.8.1.2.2 *Anoxic Mixers*

1. Position the Anoxic Mixer local L-O-R selector switch to "**REMOTE**."

2. In the electrical room, close the anoxic(s) main breaker and position the L-O-R selector switch to **REMOTE** at MCC-P1.

3. From the Aeration Tanks Screen in SCADA, click on each Anoxic Mixer Icon and select/enter the following:

   a. HAND-OFF-AUTO selector switch at the pop-up window is in the **AUTO** mode.
   b. Start the Anoxic Mixer with START/STOP selector switch.

4.8.1.3 <u>Shutdown</u>

The step procedures to isolate an aeration tank are as follows:

4.8.1.3.1 *Anoxic Mixers*

1. Position the anoxic mixer(s) L-O-R selector switches to **"OFF."**

2. If there is a reason why the anoxic mixer(s) should not be operated, padlock its breaker at MCC-P1 in the "**OFF**" position and attach a signed and dated "**DO NOT OPERATE**" tag indicating the problem.

4.8.1.3.2 *Aeration Tanks*

1. Raise the weir gate at the influent splitter box to isolate the appropriate aeration tank.
2. Close the basin's air flow control valve. At the valve's LCP, position control mode selector switch to "Manual" and depress the close pushbutton.
3. Open appropriate sluice gate to drain the tank.
4. Using transfer pump divert ML to operational aeration tank. If the basin is to be dewatered, remove and keep DO probe assembly immersed in water.
5. Hose down the tank walls as the unit is dewatering to prevent solids from drying. Maintain air flow to the aeration diffusers until the liquid level is just above the aeration diffusers. When the aeration diffusers are exposed, use a hose to clean the settled debris off the lateral pipes and membranes.
6. When the tank is completely dewatered hose the debris on the bottom of the tank towards the effluent end of the tank.

4.8.2 Aeration Blowers

4.8.2.1 <u>Pre-startup Procedures</u>

1. Be sure all H-O-A switches, L-O-R switches, "On-Off" switches, etc., are turned "OFF."
2. Check that the motor and blower shafts can be rotated.
3. Verify the blower is available for service.
4. Open valves to gauges and instruments, check for zero.
5. Check inlet and outlet piping for debris.
6. Check anchoring bolts to see if they are tight.
7. Check that grease and oil plugs are replaced and the reservoirs are full.
8. Verify suction air filters are installed.

4.8.2.2 <u>Startup</u>

1. Verify the blower is available for service.
2. Place the blower and valves into REMOTE control and put the blower into the lead position at the SCADA system.
3. In the electrical room, remove "Do Not Operate" tags, close the blower(s) main breaker and position the L-O-R selector switch to **REMOTE** at MCC-P1.

4. From the Aeration Blowers Screen in SCADA, click on each Anoxic Mixer Icon and select/enter the following:
   a. HAND-OFF-AUTO selector switch at the pop-up window is in the **AUTO** mode.
   b. Start blower at the minimum flow rate with START/STOP selector switch.

4.8.2.3 Shutdown

1. Verify other blowers are available for service.
2. Position the blower(s) L-O-R selector switches to **"OFF."**
3. If there is a reason why the blower(s) should not be operated, padlock its breaker at MCC-P1 in the "**OFF**" position and attach a signed and dated "**DO NOT OPERATE**" tag indicating the problem.

4.8.3 Membrane Bioreactor System

4.8.3.1 Startup

1. Check to see if power is on at the MCC-P1 for all equipment related to the MBR tank.
2. Set all manual valves to the positions shown on the P&ID drawings.
3. Check that the power is on at the PLC control panel(s).
4. Check that the OIS screen is on and the displaying the system graphics (pumps, tanks, etc.).
5. Check that the SCADA computer is on and the software is operating.
6. Enter user name and password.
7. On the overview screen, select the tank(s) needed for production.
8. With the membrane tanks displayed on the OIS, select the MODE CONTROL button for the tank selected.
9. With the modes of operation screen displayed, select the ALL AUTO button to put all devices for the selected tank to automatic.
10. Select the RUN button on the MODES OF OPERATION screen to complete the startup of the tank. Select the CLOSE button when finished.
11. Repeat steps 6 to 10 to startup the other trains.

4.8.3.2 Shutdown

1. Verify other MBR tanks are available for service.
2. Shut down MBR by placing unit in local and isolating influent and effluent valves.
3. If MBR is to remain out of service for an extended period, be sure to have the air scour system cycle every 30 minutes to keep the MLSS suspended

4.8.4 RAS/WAS System

4.8.4.1 Startup

1. Normally startup of this system occurs simultaneously with ML introduction into the MBR tanks.
2. Check membrane feed pumps and MCC-P1 for “Do Not Operate” tags.
3. Check and see that the WAS valve is in the closed position.
4. Open the influent valve to MBR tank and start the membrane feed pumps.
5. Open WAS motorized valve using the SCADA system.
6. Set allocated time the valve should remain open using based off the desired SRT.

4.8.4.2 Shutdown

1. Using the OIS, turn the WAS motorize valve to the close position.

4.9 ALARM CONDITIONS

Alarms are used to identify a problem with the system. Depending on the nature of the problem, the alarm may either shutdown the train(s), place a train to standby, and initiate a callout to notify the operator that there is a problem. It is understood that the operator will acknowledge the alarm and address the situation. If an alarm is not acknowledged and the problem is not corrected, production quality and quantity will drop off quickly.

An alarm that is activated by an instrument, pressure transmitter, flow transmitters, or level instrumentation, typically requires a pump or certain device to be on to generate the required flow or pressure. Otherwise, the alarm will be ignored if the device to be protected is off.

All alarms are indicated with a message on the screen. The operator cannot reset the alarm without the correct password. All alarms and the time they occurred are recorded on the alarm history screen.

Some alarms can shutdown a MBR train or the entire plant. These alarms close appropriate valves and stop pumps. The shutdown alarm puts the train to Shutdown mode. Restarting after a shutdown will require the alarm to be reset.

Devices, which are being controlled remotely, cannot have their status changed by the PLC.

Consult the SCADA for details on specific alarms, the corresponding actions and reset procedures.

4.9.1 Operational Strategies

When an alarm occurs, the operator acknowledges the alarm at the LCP, MCC or OIS, examines the process condition on the OIS, LCP, or MCC and takes corrective action. The operator then proceeds to the equipment or area originating the alarm. At the equipment (assuming that it is a safe location) that originated the alarm, the operator assesses the problem and determines the actions required. The established plant safety procedures are to be observed during all operations, including operation under emergency conditions.

4.9.1.1 Aeration Tanks

4.9.1.1.1 *Mixer or Membrane Feed Pump Motor Overload*

Indication: A motor overload is indicated at the LCP and PLC/OIS.

Action:

1. Reset the motor at the LCP.
2. Check the motor for excessive torque on the system, vibration, unusual noise, or overheating of drive or gear box. Determine if rags or material have accumulated on the mixer.

4.9.1.1.2 *Mixer or Membrane Feed Pump Motor High Temperature*

Indication: High temperature in motor windings indicated at the PLC/OIS and/or LCP.

Action:

1. Reset the motor at the LCP.
2. Determine if motor is jammed or stopped accidentally.

4.9.1.1.3 *Mixer or Membrane Feed Pump Failure*

Indication: Mixer failed to start or failed to operate indicated at the OIS/PLC and LCP.

Action:

1. Determine if another alarm caused the mixer to fail, i.e. motor overload, moisture detector, high temperature, or high or low oil level. Reset the alarm at the LCP.
2. Verify that mixer has the correct status according to operation selected. Mixer must be in Remote mode for control from the OIS/PLC.

4.9.1.1.4 *Mixer or Membrane Feed Pump Moisture Detection*

Indication: Moisture detection in motor casing indicated at LCP and PLC/OIS.

Action:

1. Reset the motor at the LCP.

2. Stop-Lockout mixer and determine location of leakage

4.9.1.2 Aeration Blowers

4.9.1.2.1 *Aeration Blower Motor Overload*

Indication: A motor overload is indicated at the LCP or PLC/OIS.

Action:

1. Reset the motor at the LCP.
2. Check the motor for excessive torque on the system, vibration, unusual noise, or overheating of drive or gear box.

4.9.1.2.2 *Aeration Blower Failure*

Indication: Blower failed to start or failed to operate indicated at the OIS/PLC.

Action:

1. Determine if another alarm caused the blower to fail, i.e. motor overload, high temperature or high or low oil pressure. Reset the alarm at the LCP.
2. Verify that blower has the correct status according to operation selected. blower must be in Remote mode for control from the OIS/PLC.

4.9.1.3 Membrane Bioreactor System

For detailed information on individual alarms associated to the membrane bioreactor system, refer to the associated manufacturer's O&M manual.

4.9.2 Troubleshooting Strategies

Operations staff must have a good understanding of the biological treatment process, which includes activated sludge, membrane bioreactor, pumps, associated equipment, and problem indicators. Table 4.7 and 4.8 present potential operational problems and possible solutions for aeration system and MBR system, respectively. It should be noted that these tables are not all-inclusive and may not correct the observed problem. With respect to mechanical and equipment problems, maintenance personnel should be notified immediately.

Additional information on specific problems may be found in equipment manufacturers' literature or text discussing wastewater treatment.

Table 4.7 Troubleshooting Strategy for Aeration Process DVI New Wastewater Treatment Plant California Department of Corrections and Rehabilitation		
Foaming		
Very stable dark tank foam on aeration tanks, which sprays cannot break up.	• SRT is too long.	• Increase sludge wasting to reduce SRT.
Thick billows of white sudsy foam or aeration tank.	• MLSS too low. • Industrial discharge of soap.	• Decrease sludge wasting to increase MLSS. • Sample and test for MBA.
Mixed Liquor Problems		
Aerator contents turn dark - sludge blanket lost in secondary clarifier.	• Inadequate aeration. • Industrial discharge of high BOD.	• Increase aeration by placing another blower in service. • Decrease loading by placing another aeration basin in service. • Check aeration system piping for leaks. • Clean any plugged diffusers. • Sample and test for high BOD/COD load.
MLSS concentrations differ substantially from one aeration to another.	• Unequal flow distribution to aeration.	• Adjust valves and/or inlet equally distribute flow.
pH of ML decreases to 6.7 or lower. Sludge becomes less dense.	• Nitrification occurring and wastewater alkalinity is low.	• Decrease sludge age by increase wasting if nitrification not required.
Sludge concentration in return sludge is low (<5,000 mg/L).	• Sludge return rate too high. • Filamentous growth. • Actinomycetes predominates.	• Reduce sludge return rate. • Raise DO, raise pH, supplement nitrogen, and add chlorine. (See Item 1). • Supplement iron feed if dissolved iron less than 0.5 mg/L..
Uneven Aeration		
Dead spots in aeration tank.	• Diffusers plugged.	• Pulse diffuser membranes. • Clean or replace diffusers - check air supply – check suction filters ahead of blowers to reduce plugging from dirty air.

Table 4.7 Troubleshooting Strategy for Aeration Process DVI New Wastewater Treatment Plant California Department of Corrections and Rehabilitation		
Air rising in very large bubbles or clumps in some areas.	• Under-aeration resulting in low DO. • Diffusers plugged.	• Increase rate of aeration to bring DO concentration up to 3 mg/L. • Pulse diffuser membranes. • Clean or replace diffusers. Check air supply-install air cleaners ahead of blowers to reduce plugging from dirty air.

Table 4.8 Troubleshooting Guide For MBR System DVI New Wastewater Treatment Plant California Department of Corrections and Rehabilitation		
PROBLEM	**CAUSES**	**SOLUTIONS**
Permeate Pump		
Pump not reaching design flow rate.	• Insufficient suction head.	• Ensure that suction line shutoff valve is fully open and line is unobstructed. • Ensure that vacuum pump are in normal operation.
	• Entrained air. Air leak from atmosphere on suction side.	• Check suction line gaskets. • Check pipe hose connections.
	• Direction of rotation wrong.	• After confirming wrong rotation, reverse any two of the three leads on a three-phase motor.
	• Suction of pipe or impeller blocked	• Clean impeller clearance. • Check strainer/suction apparatus.
No discharge or flow with pump switched on.	• Not properly primed.	• Repeat priming operation, recheck instructions. • If pump has run dry, disassemble and inspect pump before operation.
	• Direction of rotation wrong.	• After confirming wrong rotation, reverse any two of the three leads on a three-phase motor.
	• Suction head too high/water level too low.	• Correct suction conditions. • Increase positive suction head.

Table 4.8 Troubleshooting Guide For MBR System DVI New Wastewater Treatment Plant California Department of Corrections and Rehabilitation		
PROBLEM	**CAUSES**	**SOLUTIONS**
Excessive noise from the power end.	• Bearing damage due to improper lubrication. Identified by one or more of the following: • Abnormal bearing temperatures rise. • A stiff cracked grease appearance. • A brown or bluish discoloration of the bearing races. • Check direction of rotation. • Pump misaligned or resonance vibrations in the piping.	• Ensure lubricant is clean. • Ensure proper amount of lubricant is used. • Ensure the proper grade of lubricant is used. • Change two phases of the power feed. Check electrical connections. • Re-align pump/drive machine. • Check piping connections and pump mounting, if necessary improve mounting of piping. • Apply vibration-damping measures.
Excessive noise from wet end.	• Cavitation - insufficient suction head. • Impeller rubbing.	• Ensure that suction line shutoff valve is fully open and line is unobstructed. • Check and adjust impeller clearance. • Check outboard bearing assembly for axial endplay.
No discharge.	• Improper rotation direction. • Pump not printed. • Loose belt.	• Reverse pump motor. • Relieve internal pressure; carefully prime pump. • Tighten belt.

Table 4.8 Troubleshooting Guide For MBR System DVI New Wastewater Treatment Plant California Department of Corrections and Rehabilitation		
PROBLEM	**CAUSES**	**SOLUTIONS**
Discharge under capacity.	• Sludge vaporizing in line to pump. • Air entering inlet line. • Packing leaking excessively. • Sludge too thick, unable to move through lines. • Worn rotors.	• Check temperature of sludge; if above 35°C (95°F), correct temperature. • Check and correct any leaks in inlet valve. • Adjust packing to 5 to 10 drops/minute. • Check thickness of sludge; should not exceed 9 percent. • Check thickness of rotors compared to manufacturer specifications; if severely worn, replace rotors.
Pump stalls after starting.	• Sludge too thick. • Worn or unsynchronized timing gears. • Metal-to-metal contact on rotors.	• Check sludge thickness; should not exceed 9 percent. • Replace timing gears. • Replace rotors.
Pump overheats.	• Sludge too thick. • Sludge temperature too high. • Packing gland over tightened. • Shaft bearing worn or failed. • Worn or unsynchronized timing gear. • Gear case oil quantity low or quality poor. • Metal-to-metal contact on rotors.	• Check sludge thickness; should not exceed 9 percent. • Sludge should not be above 35°C (95°F). • Adjust packing gland for 5 to 10 drops/minute; if no adjustment left, replace packing. • Inspect bearing; if worn or damaged, replace. • Replace timing gear. • Inspect oil; if contaminated, change; if low, add oil. • Replace rotors.

Table 4.8 Troubleshooting Guide For MBR System DVI New Wastewater Treatment Plant California Department of Corrections and Rehabilitation		
PROBLEM	**CAUSES**	**SOLUTIONS**
Motor Overheats.	• Sludge too thick.	• Check sludge thickness; should not exceed 9 percent.
	• Packing gland too tight.	• Adjust gland for 5 to 10 drops/minute.
	• Overspeed.	• Check motor for speed; adjust as necessary.
	• Sheaves misaligned.	• Properly align sheaves.
	• Shaft bearing worn or failed.	• Inspect bearing; if worn or damaged, replace bearing.
	• Worn or unsynchronized timing gear.	• Replace timing gear.
	• Gear case oil quantity low or poor quality.	• Add oil if needed; replace oil if contaminated.
	• Metal-to-metal contact on rotors.	• Replace rotors.
Noise and vibration.	• Air entering inlet line.	• Check inlet lines for leaks; correct leaks.
	• Sludge too thick.	• Check sludge thickness; should not exceed 9 percent.
	• Sheaves misaligned.	• Properly align sheaves.
	• Loose pump and motor mountings.	• Check for loose mounts and tighten if necessary.
	• Shaft bearing worn or failed.	• Replace bearing.
	• Worn or unsynchronized timing gear.	• Replace timing gear.
	• Gear case oil quantity low or quality poor.	• Add oil if needed; replace oil if contaminated.
	• Metal-to-metal contact on rotors.	• Replace rotors.
Pump element wear excessive.	• Sludge temperature too high.	• Sludge should not exceed 35°C (95°F).
	• Sludge too thick.	• Should not be above 9 percent.
	• Shaft bearing worn or failed.	• Replace bearing.
	• Worn or unsynchronized timing gear.	• Replace timing gear.
	• Rotors contacting each other.	• Replace rotors.

Table 4.8 Troubleshooting Guide For MBR System DVI New Wastewater Treatment Plant California Department of Corrections and Rehabilitation		
PROBLEM	**CAUSES**	**SOLUTIONS**
Overheating.	• Overload.	• Reduce load or replace unit with one having sufficient capacity.
	• Incorrect oil level.	• Fill or drain to specified oil level.
	• Vent plug not installed or is restricted.	• Install vent plug provided or remove and clean in solvent.
	• Excessive or insufficient bearing clearance.	• Adjust tapered roller bearing to provide proper axial clearance.
	• Incorrect grade of oil.	• Drain unit and refill with correct grade of oil.
Bearing failure.	• Overload.	• Reduce load or replace unit with one having sufficient capacity.
	• Overhung load rating exceeded.	• Reduce overhung load or replace unit with one having sufficient capacity.
	• Excessive or insufficient bearing clearance.	• Adjust tapered roller bearing to provide proper axial clearance.
	• Insufficient lubrication.	• Check oil level; fill if necessary.
Shaft failure.	• Improper coupling alignment.	• Readjust as required.
	• Overhung load rating exceeded.	• Reduce overhung load or replace unit with one having sufficient capacity.
	• High, repetitive shock loads.	• Provide coupling with ability to absorb shock or replace unit with one having adequate service factor.

Table 4.8 Troubleshooting Guide For MBR System DVI New Wastewater Treatment Plant California Department of Corrections and Rehabilitation		
PROBLEM	**CAUSES**	**SOLUTIONS**
Gear wear or failure.	• Overload.	• Reduce load or replace unit with one having sufficient capacity.
	• High, repetitive shock loads.	• Provide coupling with ability to absorb shock or replace unit with one having adequate service factor.
	• Insufficient lubrication.	• Check oil level and fill.
	• Excessive bearing clearance.	• Adjust bearing clearance.
	• Incorrect grade of oil.	• Drain unit and refill with new oil as specified.
Oil leaks.	• Incorrect oil level.	• Fill or drain to specified oil level.
	• Vent plug not installed or is restricted.	• Install vent plug provided or remove and clean in solvent.
	• Worn oil seals.	• Check and replace as required.
	• Loose pipe plugs, backstop, cover, or input bracket.	• Check and tighten as required. If problem still exists, remove clean mating surfaces, apply new sealant, and reassemble.
Noise.	• Loose mounting or coupling.	• Check and tighten as required.
	• Worn bearings.	• Reduce load or replace unit with one having sufficient capacity. Reduce overhung load or replace unit with one having sufficient capacity. Adjust tapered roller bearing to provide proper axial clearance. Check oil; fill if necessary.
	• Worn or damaged gears.	• Reduce load or replace unit with one having sufficient capacity. Drain unit and refill with new oil.
Belt slip (sidewalls glazed).	• Not enough tension.	• Replace bets; apply proper tension.

Table 4.8 Troubleshooting Guide For MBR System DVI New Wastewater Treatment Plant California Department of Corrections and Rehabilitation		
PROBLEM	**CAUSES**	**SOLUTIONS**
Drive squeals.	• Shock load. • Not enough arc or contact. • Heavy starting load.	• Apply proper tension. • Increase center distance. • Increase tension.
Belt turned over.	• Broken cord, caused by prying on sheave. • Overloaded drive. • Impulse loads. • Misalignment of sheave and shaft. • Worn sheave grooves. • Flat idler sheave. • Excessive belt vibration.	• Replace set of belts correctly. • Redesign drive. • Apply proper tension. • Realign drive. • Replace sheaves. • Align idler. Reposition on slack side of drive close to drive sheave. • Check drive design. Check equipment for solid mounting. Consider use of banded belts.
Mismatched belts.	• New belts installed with old belts. • Sheave groove worn unevenly; improper groove angle. Gives appearance of mismatched belts. Sheave shafts not parallel. Gives the appearance of mismatched belts.	• Replace belts in matched sets only. • Replace sheaves. • Align drive.
Belt breaks.	• Shock loads. • Heavy starting load. • Belt pried over sheaves. • Foreign objects in drive.	• Apply proper tension; recheck drive. • Apply proper tension; recheck drive. Use compensator starting. • Replace set of belts correctly. • Provide drive shroud.

Table 4.8 Troubleshooting Guide For MBR System DVI New Wastewater Treatment Plant California Department of Corrections and Rehabilitation		
PROBLEM	**CAUSES**	**SOLUTIONS**
Belts wear rapidly.	• Sheave grooves worn. • Sheave diameter too small. • Mismatched belts. • Drive overloaded. • Belt slips. • Sheaves misaligned. • Oil or heat condition.	• Replace sheaves. • Replace drive. • Replace with matched belts. • Redesign drive. • Increase tension. • Align sheaves. • Eliminate oil. Ventilate drive.
Chemical Feed Pumps		
Pump does not prime in spite of full stroke movement and bleeding.	• Crystalline deposits due to chemical dry out in valves.	• Remove suction hose from the supply tank and rinse the pump liquid end thoroughly with clean water. If this does not correct the problem, then disassemble and clean the valves.
Float switch does not switch the merging pump off at minimum chemical level.	• Float is blocked.	• Remove deposits and clean float.
Pump does not meter although display lamp flashes.	• The stroke length is set to zero or no value is set.	• Adjust the stroke length with the adjustment knob.
Air Scouring Blowers		
Does not start-up.	• Electrical • Foreign material.	• Check electrical supply and protection. • Remove the foreign material inside the blower.
No airflow.	• Speed too low. • Incorrect direction of rotation. • Obstruction in piping. • Inlet filter plugged.	• Check speed and compare with data sheet. • Check direction of rotation. Rewire to correct. • Check piping, valves, and silencer, to assure an open flow path. • Clean or replace filters.

Table 4.8 Troubleshooting Guide For MBR System DVI New Wastewater Treatment Plant California Department of Corrections and Rehabilitation		
PROBLEM	**CAUSES**	**SOLUTIONS**
Low capacity	• Worn impellers. • Excessive pressure rise. • Obstruction in piping. • Inlet filter plugged.	• Replace impellers. • Check inlet vacuum and discharge pressure, and compare values with vendor specifications. • Check piping, valves, and silencer, to assure an open flow path. • Clean or replace filters.
Excessive power required.	• Speed too high. • Pressure too high.	• Check speed and compare with rating. • Check inlet vacuum and discharge pressure and compare with vendor specifications.
Overheating of bearings or gears.	• Inadequate lubrication. • Excessive lubrication. • Excessive pressures rise. • Coupling misalignment	• Check type and viscosity of oil and grease in drive end bearings (when applicable). • Check oil level. If incorrect, drain and refill with clean oil. Make sure grease is not excessive. • Check inlet vacuum and discharge pressure and compare with vendor specifications. • Check carefully. Realign if necessary.
Vibration.	• Misalignment.	• Consult vendor data.
Loss of oil.	• Headplate, gear case, or drives cover vents obstructed. • Worn seals.	• Clean vents and replace gasket. • Replace seals.

Table 4.8 Troubleshooting Guide For MBR System DVI New Wastewater Treatment Plant California Department of Corrections and Rehabilitation		
PROBLEM	**CAUSES**	**SOLUTIONS**
Abnormal noise.	• Coupling space incorrect. • Gear backlash. • Damaged bearing.	• Consult blower manufacturer. • Replace gears. • Replace bearing.
Valves		
Valve will not open.	• Valve not receiving power. • PLC is not generating an output to open valve.	• Check breaker/switch. • Check control narrative.
General		
Low flow shutdown.	• Vacuum pump not operating, or not at sufficient vacuum. • Flow valve (FV) or solenoid valve downstream of the process pump discharge is closed. • Hand valve on the discharge of the pump is throttled, or closed.	• Check vacuum at pump inlet. • Check valves for correct operation. • Verify correct position of hand valve.
High trans-membrane pressure (TMP) shutdown (low pressure).	• Hand valve on the suction to the pump is throttled or closed. • System recovery has wandered to higher than design. • Membranes require cleaning. • PID tuning - overshooting the flow/pressure control setpoints after backpulse.	• Verify correct position of hand valves. • Verify current vs. design system recovery. • Perform membrane cleaning as per Section 4.4.7 of this manual. • Contact membrane manufacturer.
High-pressure shutdown (backpulse).	• Hand valve on the suction to the pump is throttled or closed. • System recovery wandered to higher than design. • The timers are too quick as they relate to pressure shutdowns.	• Verify correct position of hand valves. • Verify current vs. design system recovery. • Contact membrane manufacturer.

Table 4.8 Troubleshooting Guide For MBR System DVI New Wastewater Treatment Plant California Department of Corrections and Rehabilitation		
PROBLEM	**CAUSES**	**SOLUTIONS**
Level problems (analog).	• Failed 24 VDC power supply. • Problems with moisture in probe.	• Verify power supply output. • Check probe seals.
Level problems (digital)	• Switch compromised by chemicals. • Blown fuse to device. • Programming problem - switch programmed to behave improperly. • Bad internal mechanism.	• Verify operation of switch. • Check fuse continuity. • Verify switch input to PLC vs. program. • Verify switch and output continuity.

4.10 SAFETY

These safety instructions are provided as general guidelines only for operation of the headworks facilities. They are not intended to replace existing plant safety instructions and procedures.

If there is any doubt whatsoever about the safety of performing any tasks related to the operation and maintenance of the equipment described here, do not proceed until the necessary protection is provided.

4.10.1 Motors and Electrical Panels

When working with electricity, you must always assume that there is sufficient voltage and current present to cause injury. As little as 12 volts or .005 amperes can be dangerous.

Whenever working on motors or electrical panels that are “hot,” still connected to the power source, or assumed to be “hot,” do not use your bare hands to perform any internal maintenance. The use of certified rubber electrician’s gloves with protective leather gloves covering them is recommended. Voltages in treatment plants can run in excess of 4,000 volts; therefore, the rubber gloves should be certified for no less than 10,000 volts.

Prior to working on any of the above mentioned units in place:

1. Open or place in the “**OFF**” position all control switches for the unit.
2. Open the main and control power circuit breakers and lock them open or remove the fuses. The open circuit breaker should be tagged to indicate the reason for its being locked open.
3. Open any foreign voltage circuits that may be present and lock and tag them.

4. Before starting work on the piece of equipment, check all exposed terminals or connections with a volt meter before removing the rubber gloves.

4.10.2 Pumps

Before working on any of the pumps in the plant, open, lock-out, and tag the main and control power circuits as described above. No pump should be worked on internally while the control and main power circuits are still “hot” (see above). Double-check both suction and discharge valves to be positive they are closed. Relieve the internal pressure on the pump before the inspection cover is removed or dismantling of the pump begins. While working on the pump, keep the area as neat and orderly as possible. If sludge or any of the pump lubricant is spilled, it should be cleaned up immediately to prevent falls or other types of injuries or, in the case of the sludge, extended exposure to potentially harmful organisms.

4.10.3 Miscellaneous Items

When working on any piece of equipment, in place, keep the working area as orderly as possible. Keep safety barriers and rails in place when possible. When a safety barrier must be removed to permit access to a piece of equipment, caution should be used when outside of the barrier and be sure to replace the barrier when you are finished with the job.

4.10.3.1 Confined Spaces

Prior to entering a confined space, which has contained sewage, it should be thoroughly hosed down with clean water, any sludge pumped out or otherwise removed and properly ventilated. The operator should not enter it alone, but should be attached to a lifeline attended above by another operator. If adequate ventilation and fresh air circulation cannot be provided, self-contained breathing equipment should be used. If this is not possible, an oxygen meter and explosive gas meter should be lowered into the confined space. These two meters should be kept in the work area while workers are present. Should either meter register a hazardous condition, do not enter the area until proper ventilation has been provided. If either meter registers a hazardous condition after work has begun, all of the workers should leave the work area until proper ventilation can be provided.

4.10.3.2 Uncovered Water-Filled Structures

Operator should always use extreme caution when working near uncovered water-filled structures. Most tanks or basins in a treatment plant that fall into this category are provided with protective barriers, i.e., hand rails, etc., to prevent someone from accidentally falling into the tank. Openings are provided in the railing to give access to the tanks; these should be used. Do not climb over or through the rails: This practice invites a fall. When the job is complete, reclose the opening in the barrier and make sure it is secured.

4.10.3.3 Routine Operations

No job is so important nor is speed or completion that critical that safety procedures should be ignored. Your carelessness can involve not only your own safety, but that of others. Follow safety regulations, use prescribed safety procedures, and above all else, think before you act. In addition, the following precautions should be observed.

1. Wear safety boots or shoes with nonskid soles.
2. Watch your footing when working on wet surfaces.
3. Keep all hoses and tools picked up and properly stored.
4. Keep the guards on all machinery during operation.
5. Walk – DO NOT RUN – down the stairs; use the handrail.
6. Keep your hands and tools away from moving equipment.
7. Before starting, stopping, or operating any of the equipment in the treatment plant, think about what hazards are created by these actions and what needs to be done to prevent these hazards from having an effect on the safe operation of the equipment.

4.11 MAINTENANCE

The plant should update any current maintenance procedures with the appropriate detailed information from the manufacturer's O&M manuals. The procedures and maintenance schedule recommended by the manufacturer's publications must be followed to maintain complete warranty coverage of the plant equipment and ancillary equipment. After the warranty period, revisions to the maintenance schedules should be based on the operation and maintenance experience and approved by a designated manager. The revisions should address the frequency of mechanical inspection based on the amount of wear observed during the warranty period.

Deuel Vocational Institution

New Wastewater Treatment Plant

O&M Manual
Disinfection System

TABLE OF CONTENTS

Page No.

Chapter 5 5-1

5.1 GENERAL PROCESS DESCRIPTION 5-1
5.2 DESIGN CRITERIA 5-2
5.3 COMPONENT/EQUIPMENT LISTINGS 5-2
5.4 COMPONENT DESCRIPTION 5-3
5.4.1 UV Disinfection System 5-3
5.4.2 UV Disinfection Cleaning System 5-11
5.4.3 Utility System 5-14
5.5 NORMAL OPERATION PROCEDURES 5-14
5.5.1 UV Disinfection Modules 5-14
5.6 EMERGENCY OPERATION PROCEDURES 5-16
5.6.1 Power Outage 5-16
5.6.2 Equipment Malfunctions 5-16
5.6.3 Low UV Intensity 5-17
5.6.4 Water Temperature Alarm 5-17
5.7 STARTUP/SHUTDOWN PROCEDURES 5-17
5.7.1 UV Disinfection System Startup 5-17
5.8 ALARM CONDITIONS 5-19
5.8.1 Operational Strategies 5-19
5.8.2 Troubleshooting Strategies 5-20
5.9 SAFETY 5-21
5.9.1 Motors and Electrical Panels 5-21
5.9.2 Pumps 5-21
5.9.3 UV System 5-22
5.9.4 Miscellaneous Items 5-23
5.10 MAINTENANCE 5-24

Deuel Vocational Institution

New Wastewater Treatment Plant

O&M Manual
Disinfection System

TABLE OF CONTENTS
(Continued)

Page No.

LIST OF TABLES

Table 5.1 UV Design Criteria 5-2
Table 5.2 Component/Equipment Listings 5-2
Table 5.3 Troubleshooting Guide For Disinfection System 5-20

LIST OF FIGURES

Figure 5.1 UV Disinfection Plan View and Sections 5-4
Figure 5.2 UV Electrical Building HVAC Plan View 5-15

LIST OF PHOTOS

Photo 5.1 UV Disinfection Train No. 1 5-7
Photo 5.2 UV Disinfection Train No. 1 Vendor Control Panel 5-9

Chapter 5

DISINFECTION SYSTEM

5.1 GENERAL PROCESS DESCRIPTION

A disinfection system is located downstream of the membrane cassette tanks. The objective of the ultraviolet (UV) disinfection system is to provide another barrier to harmful bacteria that may have passed through the membrane bioreactor (MBR) treatment system. UV light inactivates these pathogens without the addition of disinfecting chemicals, such as chlorine, chloramines, or chlorine dioxide. Although chlorine is used in the plant water system (3W), the overall dose of chemical disinfectants is greatly reduced, thereby minimizing the threat posed by disinfection by-products such as trihalomethanes (THMs), which are monitored as part of Deuel Vocational Institution (DVI) New Wastewater Treatment Plant (WWTP) National Pollutant Discharge Elimination System (NPDES) permit.

The UV light inactivates the microbes by modifying their genetic material and making it impossible for the DNA to replicate. The dose of UV light is determined based upon actual flow, UV transmittance of the filtered water, and UV intensity adjusted by safety factors to account for lamp aging and quartz sleeve fouling.

The selection of disinfection utilizing UV radiation for the WWTP was heavily influenced by the stringent effluent limits within DVI's NPDES permit. The current NPDES permit requires that all wastewater discharged from the WWTP must meet Title 22 requirements of the California Code of Regulations for tertiary disinfected water (i.e., 2 NTU and 2.2 MPN total coliform).

The effluent from the MBR system (i.e., ME) is discharged from the rotary lobe pumps to a common 12-inch header pipe that connects to the UV disinfection system. The membrane effluent (ME) is then split between two of the three UV disinfection treatment trains (two duty and one standby). Each UV treatment train contains two high intensity medium pressure UV disinfection modules in series. The disinfection modules contain several individual components: (1) a stainless steel disinfection unit; (2) 12 medium pressure high intensity UV lamps mounted perpendicular to flow; (3) UV intensity sensor; and (4) temperature sensor.

Each UV train has a motorized inlet and outlet valve for process isolation. After the outlet valve, each UV train has a flowmeter. The disinfected effluent exits each UV train into a 12-inch common header.

The delivered UV dose is based on the flow rate, UV transmittance, and UV intensity. The flow rate is measured by magnetic flowmeters located on the outlet side of each UV train. The UV transmittance, a measure of the clarity of the water, is measured from the 12-inch membrane effluent header that connects to the UV Disinfection System. A sensor contained

in each UV unit measures the UV intensity. These parameters are transmitted to the UV control system, supervisory control and data acquisition (SCADA) system, which calculates the dosage and adjusts the power level to deliver the effective UV dose for the system.

This chapter describes the general operation and maintenance of equipment associated with UV disinfection system. For detailed operation and maintenance information on individual equipment items, refer to the associated manufacturer's operations and maintenance (O&M) manual.

5.2 DESIGN CRITERIA

The design criteria for the UV Disinfection System are presented in Table 5.1.

Table 5.1 UV Design Criteria
DVI New Wastewater Treatment Plant
California Department of Corrections and Rehabilitation

Descriptions	Modules	Value
UV Disinfection System		
Type	Medium Pressure High Output In-Vessel	
Number of Unit Trains in Parallel		2 + 1 Standby
Number of Modules per Train		2
Minimum Design UV Transmittance	%T	65
Capacity per Reactor Train	mgd	1.362
Effective Dosage	MJ/cm^2	80

5.3 COMPONENT/EQUIPMENT LISTINGS

Table 5.2 is a listing of the major components and equipment items, including the function and purpose of each, for the UV Disinfection System.

Table 5.2 Component/Equipment Listings
DVI New Wastewater Treatment Plant
California Department of Corrections and Rehabilitation

Name	Tag Numbers	Qty.	Characteristics	Function/Purpose
Inline UV Modules	07-UV-110 07-UV-120 07-UV-210 07-UV-220 07-UV-310 07-UV-320	6	Medium Pressure High Output In-Vessel manufactured by Aquionics Inc.	Disinfect membrane effluent prior to being discharged to Deuel Drain

Table 5.2 Component/Equipment Listings DVI New Wastewater Treatment Plant California Department of Corrections and Rehabilitation				
Name	**Tag Numbers**	**Qty.**	**Characteristics**	**Function/Purpose**
UV Train Inlet Valve	07-VAL-100 07-VAL-200 07-VAL-300	3	12-inch, electrically actuated butterfly valve	Directs the influent flow through designated UV trains
UV Train Outlet Valve	07-VAL-101 07-VAL-201 07-VAL-301	3	12-inch, manual operated butterfly valves	Isolates UV train from entire UV system
UV Train Outlet Valve	07-VAL-102 07-VAL-202 07-VAL-302	3	12-inch, manual operated butterfly valves	Isolates UV train from entire UV system
Citric Acid Day Tank	07-TNK-010	1		
Air Handling Unit	05-AHU-002	1		
Major Instruments				
Disinfected Effluent Flowmeter	07-FE-100 07-FE-200 07-FE-300	3	0-1,000 gpm, 12-inch, magnetic flowmeter	Measures the effluent flow from each UV disinfection train
UV Transmittance Meter	07-AE-100	1	0 to 100%	Measures the UV transmittance of the influent flow

5.4 COMPONENT DESCRIPTION

The major components of the UV Disinfection facility and their functions are outlined below. Figure 5.1 illustrates the UV Disinfection System Plan View and Sections including the associated equipment and piping.

5.4.1 UV Disinfection System

Each UV disinfection reactor includes high intensity medium pressure UV lamps. The lamps are powered by electromagnetic ballasts with a variable power output between 40 percent and 100 percent of full power. A lamp drive enclosure containing the ballasts and other lamp power supply components is provided with each reactor. The lamp power output can be regulated either manually by operator input or automatically by feedback from the sensor reading. The power output is automatically regulated to achieve minimum dose set point, which is determined by the operator. The reactor includes a sensor (one per lamp) to

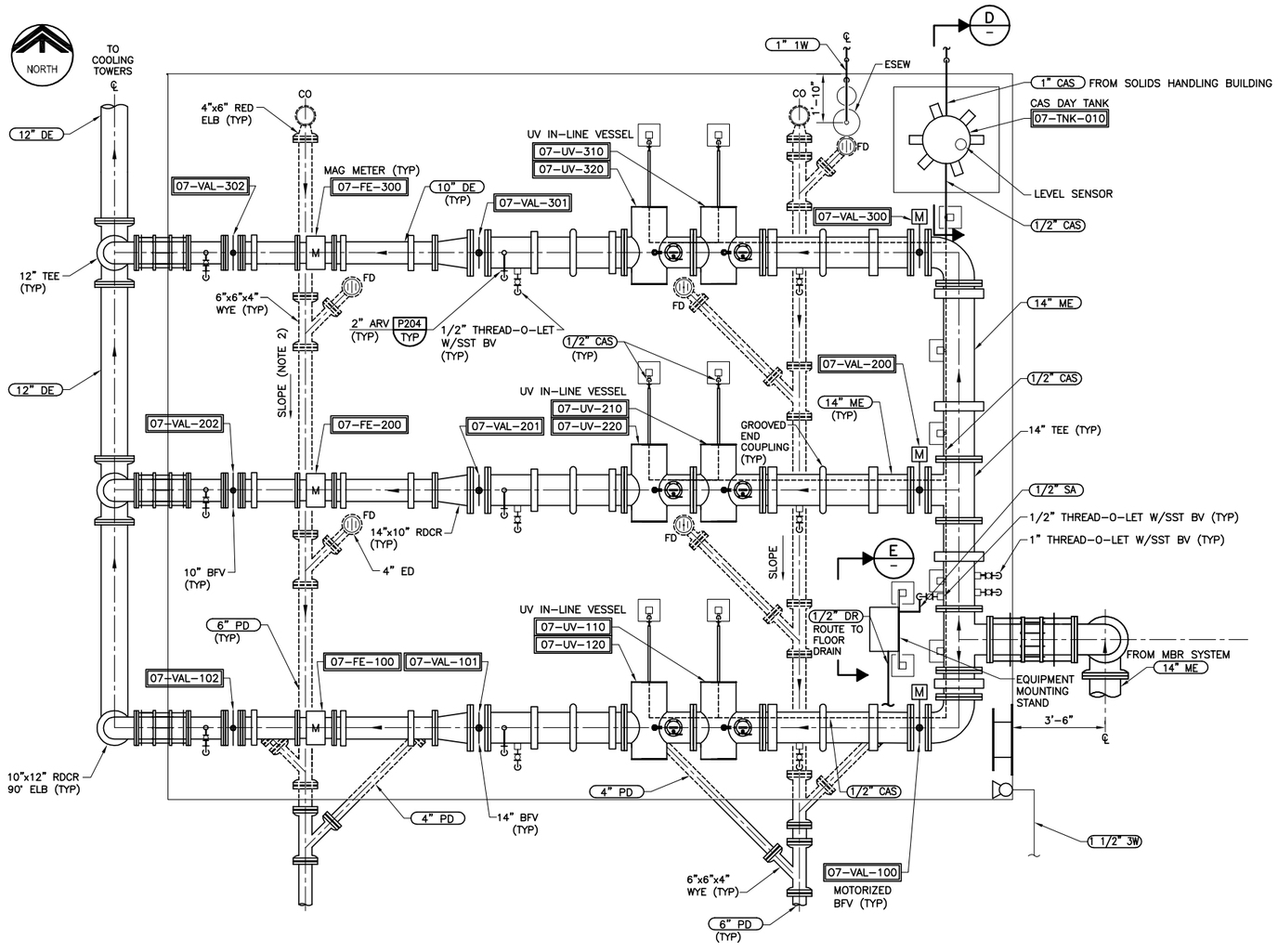

A PLAN – UV DISINFECTION SYSTEM

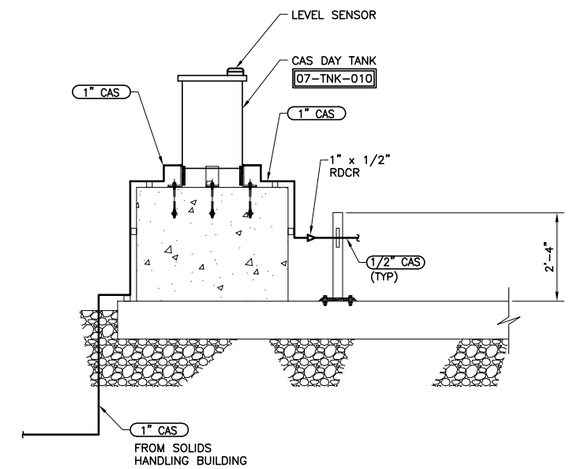

D SECTION

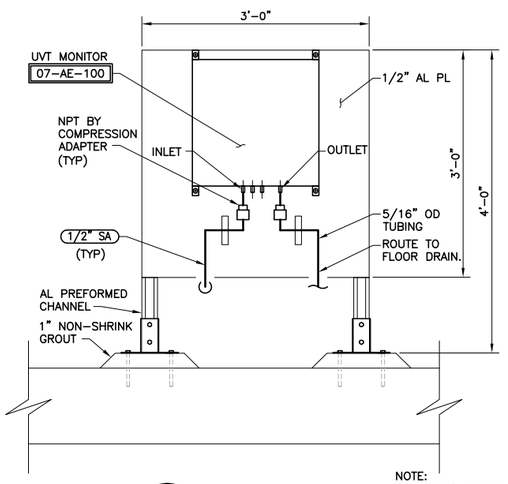

E SECTION

NOTE: DRAIN NOT SHOWN FOR CLARITY.

Figure No. 5.1

UV DISINFECTION PLAN VIEW AND SECTIONS
DEUEL VOCATIONAL INSTITUTION (DVI) NEW WWTP

CALIFORNIA DEPARTMENT OF CORRECTIONS AND REHABILITATION

carollo
Engineers...Working Wonders With Water ™

continuously measure the absolute UV irradiance in the water to ensure an adequate UV dose is maintained.

5.4.1.1 UV Disinfection Influent Valves

Each of the three trains is equipped with a 14-inch motorized operated butterfly valve (07-VAL-100, 07-VAL-200, and 07-VAL-300); refer to Figure 5.1. The valves are the principle mechanism that isolates flow to the UV disinfection reactors. The valve is open when the reactor is in operation (treating mode) and closed when the reactor is offline or is warming up. Several faults may occur with the valves, any of which will cause a fault in the UV disinfection system:

1. The valve indicates open status when the valve should be closed. The UV system will try to close the valve.
2. The UV disinfection system is unable to open the valve or is taking too long to reach the open position.
3. The valves are in local control mode.

Awareness of these faults may help with troubleshooting the process.

5.4.1.1.1 *UV Disinfection Influent Valve Controls*

The reactor 1 (07-VAL-100), reactor 2 (07-VAL-200), and reactor 3 (07-VAL-300) influent control valves are each controlled by an electric motorized actuator. Each influent valve can be controlled by the programmable logic controller (PLC), through the supervisory control and data acquisition (SCADA) system, or locally using OPEN-STOP-CLOSE pushbuttons and the LOCAL-OFF-REMOTE (L-O-R) selector switch at the valve, which is located on the electric actuator of each valve in the UV disinfection room. Lights indicate the current position of the valve. A red LED indicates the valve is fully open and a green LED indicates the valve is fully closed. Both LEDs are illuminated when the valve is in mid-position.

1. With the L-O-R selector at the valve in the **LOCAL** position, the selected influent valve is controlled manually by the operator using the **OPEN/STOP/CLOSE** pushbuttons.
2. With the L-O-R selector at the valve in the **OFF** position, the selected influent valve is prohibited from operating.
3. With the L-O-R selector at the valve in the **REMOTE** position, the influent valve is controlled through the PLC.
    a. With the HAND-OFF-AUTO selector switch at the pop-up window in the **HAND** position, the selected influent valve is controlled manually by the operator using the **OPEN** or **CLOSE** button.
    b. With the HAND-OFF-AUTO selector switch at the pop-up window in the **OFF** position, the selected influent valve is prohibited from operating.

c. With the HAND-OFF-AUTO selector switch at the pop-up window in the **AUTO** position, the selected influent valve is controlled by the PLC based on the reactor selected for operation.

Normal operation for the UV influent control valve is REMOTE-AUTO control mode. In REMOTE-AUTO control mode, the influent valve that is selected for operation will open based on a signal from the UV system PLC.

5.4.1.2 UV Disinfection Modules

Three parallel UV disinfection treatment trains are located on a concrete pad north of the membrane cassette tanks. Disinfection is accomplished with two UV disinfection modules operated in series for each parallel train. Photo 5.1 shows UV Disinfection Train No. 1. The three treatment trains are designated as two duty trains and one standby train, providing a degree of redundancy if one train were to fail completely. Each train was designed to provide a UV dose of 110 mJ/cm^2 at a maximum flow rate of 1 mgd and minimum 65 percent UV transmittance. The following are the UV trains (from north to south) and modules:

- UV Disinfection Train 1 UV Module 1 and 2 (07-UV-110 and 07-UV-120)
- UV Disinfection Train 2 UV Module 3 and 4 (07-UV-210 and 07-UV-220)
- UV Disinfection Train 3 UV Moduel 5 and 6 (07-UV-310 and 07-UV-320)

The UV unit is the main component of the UV Disinfection System. The liquid inlet and outlet connections are in line with each other. Four end plates are fitted at a right angle to the liquid flow direction. These hold the lamps, the cleaning mechanism, and the temperature sensor. The fitted accessories are covered on both sides with a hood that also contains the cable glands. The unit also contains standard features for venting and draining the system.

The UV modules each house 12 lamps per unit. There are a total of 72 lamps in the entire UV disinfection system. Each row of lamps is equipped with a UV sensor. These sensors detect the intensity of UV light emitted by the lamps in the unit. The UV lamps are operator accessible and removable from either side of the irradiation unit without draining the unit or removing the quartz sleeves from the flow. Likewise, the lamp sensors are removable from the irradiation unit without draining the unit or removing the probe well. Additionally, a circular access hatch is provided on the top of the unit to allow easy access for visual lamp/sleeve inspection and/or removal of foreign debris from the unit without removing the lamps or quartz sleeves.

Mixing and prevention of short-circuiting is the key to properly disinfecting the filtered water, so each UV unit is fitted with a baffle plate on the inlet. This pierced stainless steel plate straightens the flow in the UV unit so that a high percentage of the water passing through the unit is given the proper dose of UV radiation.

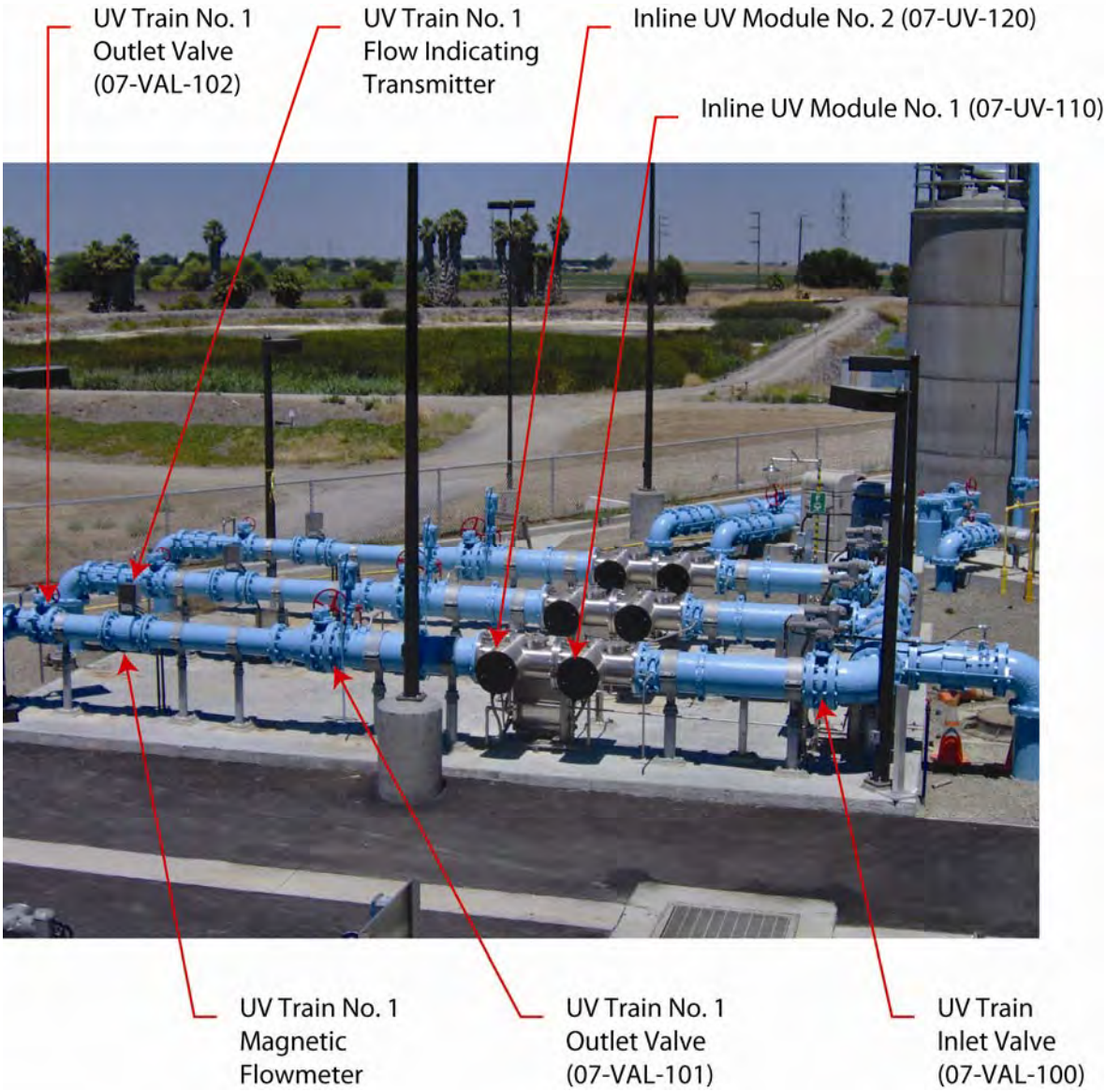

UV Disinfection Train No. 1

PHOTO 5.1

California Department of Corrections
and Rehabilitation
Deuel Vocational Institution Wastewater Treatment Plant
Operations and Maintenance Manual

H:\Client\CDC SAC\6927\6927R11 - DVI - DD and CD Phase\O&M Manual\O&MManualPhotos\WordFiles\PhotoNo5.1.doc

carollo
Engineers...Working Wonders With Water®

5.4.1.2.1 *UV Module Control Center*

Each UV disinfection treatment train is connected to one control module and two power modules located in the Electrical Building east of the UV disinfection system. Each power module powers an associated UV module, while the control modules are used to alert the operator of any warnings and allows the operator to change the setting of each UV disinfection train. Additionally, the control module communicates with the plant SCADA system; thus, any alarms are indicated on the display panel. The following are the UV power modules per train:

- UV Power Module 1 and 2 (07-VCP-110 and 07-VCP-120)
- UV Power Module 1 and 2 (07-VCP-210 and 07-VCP-220)
- UV Power Module 1 and 2 (07-VCP-310 and 07-VCP-320)

The UV system is designed to provide a UV dosage sufficient to disinfect the secondary effluent. The process of converting electrical power to UV light is energy intensive, thus good process control is warranted to prevent excessive dosing and power consumption. The following are the UV control modules per train:

- UV Control Module 1 (07-VCP-100)
- UV Control Module 2 (07-VCP-200)
- UV Control Module 3 (07-VCP-300)

Process control of the UV reactors is normally done by the UV system PLC located in the UV electrical room. Once the Operator inputs the set point UV dose at each UV control module, the UV PLC adjusts lamp intensity in the UV system to maintain the set point dose regardless of flow rate, effluent quality, or lamp fouling while conserving power. The Operator also chooses the lamp-cleaning mode, and various other timer, alarm, and systems set points via the operator interface screen. See the manufacturer's O&M manual for complete operating instructions. A photo of the UV Disinfection Train No. 1 Vendor Control Panel is shown in Photo 5.2.

5.4.1.3 <u>Lamps</u>

The UV disinfection lamps are the heart of the disinfection system, and are monitored closely to prevent failure or under dosing of disinfecting UV radiation. The lamps are inserted into quartz sleeves, which prevent the water from coming in contact with the lamps themselves.

The lamps may be fitted from the flanges on either side of the unit; however, this must be done following a strict procedure. This includes never touching the lamps with bare hands, remembering a lamp that has just been switched off is still very hot, and the lamps do

UV Disinfection Train No. 1 Manual-Off-Auto Selector Switch

Vessel 1 - Vessel 2 Selector Switch

UV Disinfection Train No. 1 Vendor Control Panel

PHOTO 5.2

California Department of Corrections and Rehabilitation
Deuel Vocational Institution Wastewater Treatment Plant Operations and Maintenance Manual

carollo
Engineers...Working Wonders With Water®

H:\Client\CDC SAC\6927\6927R11 - DVI - DD and CD Phase\O&M Manual\O&MManualPhotos\WordFiles\PhotoNo5.2.doc

contain a small amount of mercury. Refer to manufacturers O&M manual for detailed lamp replacement procedures.

The lamps may be operated at three different levels of intensity: low, medium, and high. The system is designed to operate normally under the low power setting. Peak daily flow rates may require higher power settings. As the lamps age and become less effective, the power to the lamps will also need to be increased to compensate for the decreased UV output. The manufacturer estimates the low power setting will be sufficient for 3,200 hours of operation followed by 2,400 hours of operation for both medium and high settings for a total life expectancy of 8,000 hours.

5.4.1.4 Intensity Sensor

Changes in water quality, fouling of the quartz sleeves, and aging of the lamps can cause changes in the UV intensity. Each UV unit contains a sensor that continuously measures UV intensity. The sensor measures the UV intensity of the UV lamp in a fixed position. The sensor passes on information to the control system so that the lamp power level can be adjusted if the lamp intensity decreases, the quartz sleeve becomes dirty or the quality of the liquid changes. The UV sensor works within a measuring range of 240 to 300 nanometers. The measurement is normally reported in energy per area, or mJ/cm^2.

The sensors are also used to determine the viability of the lamps. If the intensity begins to drop, the sensor will tell the PLC and the power to the lamps will increase to achieve the required intensity. With all of the lamps running at full power, any drop off in lamp intensity compared to the initial runs can be attributed to sleeve fouling, lamp aging, or poor water quality. The indication of dirty or scaled quartz sleeves may call for an acid cleaning of the UV lamps, described in Section 5.4.2, below.

If the ratio of expected lamp intensity to actual measured lamp intensity (S/S_0) falls below an operator adjustable value of 0.68 (calculated as 0.85 sleeve fouling factor multiplied by the 0.8 aging factor), an alarm will be generated indicating the lamp intensity is less than the expected combined aging and fouling safety factor.

5.4.1.5 Temperature Sensor

Each UV unit is also equipped with a temperature sensor that automatically shuts down the lamps if the temperature rises too high to prevent the lamps from burning out. The temperature sensors monitor how much the UV lamps increase the water temperature and ensure that enough flow is passing through the system to keep the lamps cool. An alarm in SCADA is linked to the temperature sensor, so that if the temperature inside of the disinfection unit rises above 113 degrees Fahrenheit the UV system will send an alarm and the system will be shut down.

5.4.1.6 Influent Transmittance Monitor

A single online UV transmittance (UVT) monitor (07-AE-100) is provided for the entire UV disinfection system. The monitor is gravity fed membrane effluent from the 12-inch line entering the UV system; refer to Figure 5.1. Similar to a turbidimeter, the UVT monitor passes a beam of light through a column of water. The monitor then measures the ratio of light entering the column to light leaving the column. Transmittance may be blocked by suspended particles, entrapped air, and turbidity. To ensure all entrapped air has been released from the system, an air release valve is installed at the same location of the UVT monitor. The loss of transmittance lowers the transfer efficiency and necessitates the use of more lamps or power.

5.4.1.7 Effluent Valves

Manually operated 14-inch butterfly valves (07-VAL-101, 07-VAL-201, and 07-VAL-301) isolate the UV reactors from the downstream processes; refer to Figure 5.1.

5.4.1.8 UV Disinfection System Effluent Flowmeters

Leaving each UV unit is a 12-inch effluent pipe fitted with a magnetic flowmeter. This allows the flow in each UV train to be measured so the correct UV dosage may be delivered to the UV system. The following are the UV trains (from north to south) and flowmeters:

- UV Disinfection Train 1 Flowmeter 1 (07-FE-100)
- UV Disinfection Train 2 Flowmeter 2 (07-FE-200)
- UV Disinfection Train 3 Flowmeter 3 (07-FE-300)

The UV disinfection system will change the effective UV dose in direct proportion to the flow increase. While normally accurate within 0.5 percent, a full 5 percent safety factor is added to any flow calculated by the meter to allow for possible error in the flow.

The external power source for the flowmeters (07-FE-100, 07-FE-200, and 07-FE-300) originates from lighting panel 07-LP-001, which is located in the UV electrical room. Each flow meter has a rated capacity of 0 to 1,000 gallons per minute (gpm). The influent flow rate will also be indicated on the SCADA system.

5.4.2 UV Disinfection Cleaning System

Any build-up of solids, chemical precipitates, or other material on the surface of the lamps will partially or completely block the light intended for disinfection and reduce the effective dose of UV light reaching the water.

5.4.2.1 Aging and Fouling Index

Fouling can be classified as external sleeve fouling, internal sleeve fouling, sleeve degradation, and sensor window fouling.

External sleeve fouling can be caused by precipitation of compounds whose solubility decreases as temperature increases ($CaCO_3$, $CaSO_4$, $MgCO_3$, $MgSO_4$, $FePO_4$, $FeCO_3$, $Al_2(SO_4)_3$); precipitation of compounds with low solubility ($Fe(OH)_3$, $Al(OH)_3$); or deposition of particles by gravity settling and turbulence-induced impacts. The rate of precipitation will depend on the water temperature, pH, alkalinity, total dissolved solids (TDS), hardness, particle concentration, and concentration of precipitating cations (Ca, Fe, Mn, Mg, Al) and anions (CO_3^{2-}, SO_4^{2-}). The fouling will vary spatially along and around the lamp sleeve and depend on the operating temperature of the lamp. The precipitation rate is greater with lamps operating at higher temperatures *(e.g.*, MP >> LPHO > LP lamps). Organic fouling can occur when a reactor is left off and full of water for an extended period of time.

Internal sleeve fouling is caused by the evaporation of materials within the sleeves by the heat from the lamps followed by condensation of those materials on the cooler inner surface of the sleeve. Materials can be contaminants introduced by the vendor or operator, or materials off gassed from lamp assembly components. Little information is available on this issue.

Sleeve degradation may be caused UV light damage (solarization), permanent fouling, or damage to the sleeve caused by the wipers (scratches). UV vendors state that the loss of sleeve UVT ranges from zero to several percent per year.

UV sensor window fouling is caused by the same mechanisms as external sleeve fouling. Because the sensors operate at ambient temperature, the fouling rate should be slower than external sleeve fouling. Sensor window fouling impacts dose monitoring and can lead to significant over dosing by the UV system.

The UV systems are equipped with cleaning systems to remove fouling. The reactors installed at the DVI WWTP include mechanical wipers. Mechanical wipers are used to clean the lamp sleeves and are designed to scrape away foulant as they move across the surface.

Equation 1 below describes the calculation of CAF Factor. It is a function of the measured intensity (S) in the operating reactor and the predicted intensity ($S_{PREDICED}$) from the validation report. The predicted intensity is a function of the number of lamps in operation, the ballast power, and the UVT of the water.

$$CAF\ FACTOR = \frac{S\left(\frac{W}{m^2}\right)}{S_{PREDICTED}\left(\frac{W}{m^2}\right)} \qquad \text{Equation 1}$$

5.4.2.2 Mechanical Cleaning

The performance of the system in this case would be adversely affected. A cleaning system is included in each UV unit to maintain the efficient transfer of light to the water.

The lamp modules incorporate an automatic lamp cleaning system designed to operate without the need for system shutdown or loss of disinfection. Each module is equipped with a mechanical wiper assembly that moves along the length of the quartz sleeves. All lamps are wiped simultaneously in each UV disinfection chamber. Cleaning is achieved mechanically by the scraping action of the wiper.

NOTE: For complete UV System operational details refer to the equipment manufacturer's O&M manual.

5.4.2.2.1 *UV Lamp Mechanical Cleaning System Controls*

A complete wipe sequence to clean all modules may be initiated either manually or automatically via the Wiper Control screen at the Control Module. A wiper sequence timer initiates automatic cleaning cycle hourly (standard setting) and before the lamp energy is switched to a higher level. Automatic operation of the wipers can be set from the control panel in adjustable intervals ranging from 10 minutes to 24 hours.

5.4.2.3 Chemical Cleaning

For more information on citric acid chemical cleaning agent and delivery to the Citric Acid Solution (CAS) Day Tank (07-TNK-010), please see Chapter 6, Chemical Systems.

WARNING: ALWAYS WEAR PROTECTIVE CLOTHING AND FULL EYE PROTECTION GOGGLES WHEN WORKING WITH CITRIC ACID SOLUTION!

The time interval between cleaning solution changes will vary depending on the nature of the membrane effluent and related sleeve fouling characteristics. The following a is list of the procedures for chemical cleaning:

1. Turn off the liquid flow and the main switch of the UV-system.
2. Place appropriate chemicals in the disinfection chamber via CAS Day Tank (07-TNK-010).
3. Drain the liquid off via the drain plug after the time the chemicals need to work has elapsed. Remember to remove the ventilation plug before draining.
4. Rinse the disinfection chamber with the normal liquid medium used in the system, and drain once again via the drain hole.
5. Replace the drain and ventilation plugs.

5.4.3 Utility System

5.4.3.1 UV Electrical Building Air Handling Unit

The operation of the air-handling unit (07-AHU-001) is a function of the ambient conditions inside the UV electrical building. Figure 5.2 illustrates the UV Electrical Building Heating Ventilation and Air Conditioning (HVAC) System Plan View including the associated equipment and ducting. An operating temperature of approximately 70 degrees Fahrenheit (F) is the standard indoor operating temperature for most occupied spaces.

5.4.3.1.1 *UV Electrical Building Air Handling Unit*

The external power source for the air-handling unit (07-AHU-001) and the air handling unit vendor control panel (07-VCP-001) originates from distribution panel (07-PP-001) and lighting panel (07-LP-001), which are located in the operations building. The air-handling unit may be operated automatically based on a thermostat setting, or manually by ON/OFF/AUTO switches located on 07-VCP-001; refer to Figure 5.2.

5.5 NORMAL OPERATION PROCEDURES

This section describes operation of the UV disinfection system after the system has been started and is ready for normal operation. Startup/shutdown and safety check procedures are discussed in other sections of this manual. In addition to the information presented, consult the equipment manufacturer's O&M manual for normal operation procedure and maintenance schedules.

Normal operation of the disinfection system is accomplished through the local PLC. The system monitors the flow rate entering the system and adjusts the intensity of the lamps and the position of the influent valves accordingly. Alternatively, the system can be manually operated from the local control panel (LCP). Hand switches, located at the valve control panels and at the PLC, may be used to open and close the influent valves and adjust the power level of each disinfection unit.

5.5.1 UV Disinfection Modules

1. Check the UV-output LED bar reading. If the bar has decreased, the cause could be that the UV transmission has decreased, one or more of the UV lamps is aging, the quartz sleeve is dirty, or the UV window is dirty. Consult the manufacturer's O&M manual for proper troubleshooting procedure.
2. Monitor all alarm LEDs and alarms in the alarm register at the PLC. If an alarm is indicated, consult the manufacturer's O&M manual for troubleshooting procedures.

Some components of the system require only periodic maintenance. Consult the manufacturer's O&M manual for a complete list and instructions on how to perform the maintenance. Be sure to follow all safety guidelines.

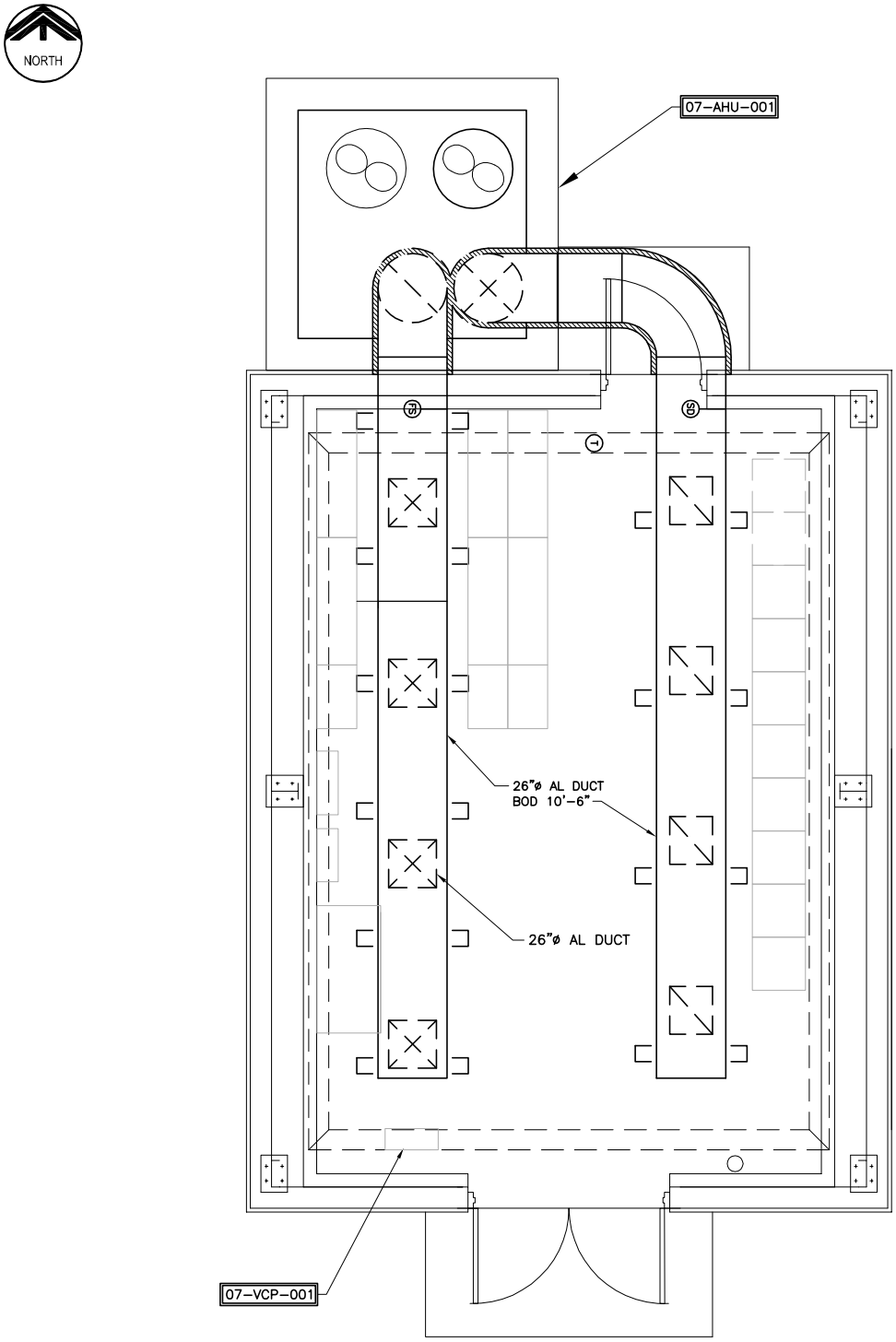

A ULTRAVIOLET ELECTRICAL BUILDING – HVAC PLAN

Figure No. 5.2

UV ELECTRICAL BUILDING HVAC PLAN VIEW
DEUEL VOCATIONAL INSTITUTION (DVI) NEW WWTP

CALIFORNIA DEPARTMENT OF CORRECTIONS AND REHABILITATION

1. Clean quartz sleeve and quartz window on a regular basis. The disinfection unit may be cleaned with a chemical solution to remove material that is resistant to mechanical cleaning methods. The unit does not need to be dismantled to perform the chemical cleaning.
2. Every six months, replace silica gel bags of the detectors located inside housing.
3. Monthly, remove and clean dust filters in the ventilation grid of the power module.
4. At least once per month, test ground fault detector.

5.6 EMERGENCY OPERATION PROCEDURES

This section describes the operation of the UV Disinfection facility under emergency circumstances. Scenarios for different emergency conditions are given, followed by suggested corrective actions to be taken.

5.6.1 Power Outage

1. In the event of a power outage, after an adjustable time delay, the emergency generator will start. The UV system will re-start if placed in remote-automatic control. Once restarted, the equipment will resume operation at previous setpoints. Verify equipment has started properly.
2. After utility power has been restored and the plant is switched from standby to utility power, the equipment will once again restart if in remote-automatic mode. Verify equipment has started properly.
3. Equipment in local or remote-manual mode will require manual restart.

Note: The aeration basins can serve to store influent flow from the DVI facility during an extended UV shutdown. The headworks would continue operating and sending flow to the aeration basins. The basins would then serve as temporary storage structures, filling available volume in the aeration basins and membrane wet well until the UV has had time to properly cool and be restarted.

5.6.2 Equipment Malfunctions

1. Motors or pumps with excessive vibration, unusual noise, overheating, or lubrication leakage should be shutdown. The unit should not be operated until the reason for these unusual observations has been corrected.
2. Motors that shutdown due to current imbalance or over current should be taken out of service immediately. Either of these types of failures indicates serious problems that should be investigated by an electrician prior to restarting the equipment. Shutdowns of this nature are common during electrical problems and a single attempt to restart is justified in this situation.

3. Pumps with excessive packing or seal leakage can be operated as long as the leaking water does not travel close to electrical or instrumentation equipment. Correct the leakage as soon as time permits.

5.6.3 Low UV Intensity

1. A low UV intensity reading could be caused by several factors. It could be an operational problem with the unit such as aging lamps that need to be replaced, dirty quartz lamp sleeves or quartz window that need to be cleaned or air bubbles entrained in the water that need to be removed. The problem could also be of an electrical nature that prevents the actual reading of the UV sensor from being properly displayed.
2. When the dose of UV begins to drop, the system will automatically engage the cleaning mechanism and if this does not solve the problem, then the lamps will increase in intensity.
3. If UV train is already at max power and the intensity decreases, the low UV alarm will warn the operator to check the UV train and the unit will go into standby while the standby train automatically takes the place of the malfunctioning unit.

5.6.4 Water Temperature Alarm

1. If the water temperature alarm goes off and the water is indeed, too hot, cool water should be added to the UV unit to prevent damaging the system.
2. If temperature sensor is malfunctioning, remove train from service and repair as soon as possible to prevent damage of the UV train.
3. If the temperature of the water rises above 113 degrees Fahrenheit (°F), an alarm will be sent to SCADA and then, the system will shut itself down and the standby unit will automatically take the place of the malfunctioning unit.
4. The amount of water in the UV unit should be checked regularly, as insufficient water supply to the unit can lead to excessive temperatures.

5.7 STARTUP/SHUTDOWN PROCEDURES

It is necessary that the UV unit be completely filled with water during operation. Operating the system with the UV unit partially or completely empty may cause severe damage to the system.

5.7.1 UV Disinfection System Startup

The UV system PLC will start the lamps according to its prescribed procedure. Each unit will require up to five minutes to reach the proper intensity. During this period, the LOW UV and LOW-LOW UV DELIVERED DOSE alarms will be sent to the plant SCADA and relayed to the membrane SCADA. The membrane permeate pumps are interlocked to be prevented

from operating for up to eight minutes (five to eight minutes, operator adjustable). After either the time delay or the UV alarms have been resolved, the UV system PLC will open the influent valve and the membrane permeate pumps will be allowed to operate. For the eight-minute period, influent flow to the plant will be stored in the aeration basins.

5.7.1.1 Pre-startup Procedures

1. Verify that the reactor(s) are isolated (valved off) at the influent and effluent.
2. Insure the electrical supply at all reactor power supply and control panels is off.
3. Lock out and tag the main electrical disconnect at the power supply cabinet.
4. Inspect the physical installation of the reactor. Verify that the influent and effluent flanges are fully bolted and tight.
5. Verify the unit is securely mounted to the floor or foundation.
6. Verify that drain valves are present and closed for each reactor.
7. Verify that all UV sensors are present and securely mounted in their wells.
8. Remove and set aside all lamp access covers.
9. Remove one quartz sleeve within each access compartment and visually inspect reactor internals for debris and obstructions. Inspect all quartz sleeves. Confirm they are clean and dry.
10. Verify the UV lamps are properly installed. If not already installed, install the UV lamps at this time. Refer to Manufacturer Maintenance Manual for installation instructions.
11. Verify that a high temperature switch is installed.

5.7.1.2 Startup

1. Check and make sure that all circuit breakers and ground fault detectors are reset.
2. Check and see if all sample valves are closed.
3. Open the butterfly valve on the influent side of the unit slowly to gradually fill the pipeline. Ensure that there is enough water in the UV unit.
4. Turn the main switch on. The lamps take 1 to 5 minutes of warm-up time to reach their full UV intensity. The lifespan of the lamps will be drastically reduced if they are repeatedly switched on and off. This results in decreasing UV intensity. If lamps were recently switched off, wait 10 minute before starting to ensure lamps have completely cooled.
5. When the UV output is above the minimum, open the effluent butterfly valve to allow flow to pass to the standpipe.

5.7.1.3 Shutdown

1. Close effluent isolation butterfly valve.
2. Turn power off to lamps you plan on taking out of service.
3. If work is to be done on UV train, close influent isolation butterfly valve to isolate UV train.

5.8 ALARM CONDITIONS

This section describes the alarm conditions that can occur during operation of the UV disinfection system. The alarms provide for the operational surveillance of the facilities, alerting operators to abnormal conditions. The alarms are monitored by the plant SCADA system. Alarm conditions are displayed at the LCP and at the SCADA system. Consult the manufacturer's O&M manual for more detailed responses to alarm conditions.

5.8.1 Operational Strategies

When an alarm occurs, the operator acknowledges the alarm at the LCP or SCADA interface, examines the process condition, and takes corrective action. The operator then proceeds to the equipment or area originating the alarm. At the equipment (assuming that it is a safe location) that originated the alarm, the operator assesses the problem and determines the actions required. The manufacturer's O&M manual provides specific trouble-shooting procedures.

5.8.1.1 UV Unit Alarms

5.8.1.1.1 *High UV Temperature Alarm*

Indication: High temperature in UV unit indicated at the SCADA and LCP. Lamps will shut down if temperature is above the set point.

Action:

1. Reset the alarm at the operator interface system (OIS) or LCP.
2. Check to make sure sufficient water is flowing through the modules.
3. Check the temperature probe to determine if it is accurate.

5.8.1.1.2 *Low UV Intensity Alarm*

Indication: Low intensity in UV unit indicated at the SCADA and LCP.

Action:

1. Reset the alarm at the OIS or LCP.
2. Initiate a cleaning cycle of the quartz sleeves.

3. If the UV intensity remains low, shutdown the UV train when flow conditions permit and clean any dirty sleeves and replace lamps that are not working.

5.8.1.1.3 *Lamp Failure Alarm*

Indication: Failure of one or more lamps in UV unit indicated at SCADA and LCP.

Action:

1. Reset the alarm at the OIS or LCP.
2. Check electrical connections to lamp.
3. When flow conditions allow, shutdown the UV train and replace lamp.

5.8.1.1.4 *Ground Fault Alarm*

Indication: Electrical ground fault.

Action:

1. Reset alarm at the OIS or LCP
2. When flow conditions allow, shutdown the entire treatment train and check for leak in insulation surrounding lamps.

5.8.2 Troubleshooting Strategies

The troubleshooting guide for the UV Disinfection System is presented in Table 5.3.

Table 5.3 Troubleshooting Guide For Disinfection System DVI New Wastewater Treatment Plant California Department of Corrections and Rehabilitation

Indicators/ Observations	Probable Cause	Check or Monitor	Solutions
Cleaning mechanism is not functioning	• Reed contacts	• Check to see if reed contacts are functioning	• Use an external magnet to test if red contacts are functioning
Temperature range is higher or lower than normal	• Problems with temperature sensor	• Check to see if temperature sensor is defective	• Measure the liquid temperature using an external thermometer
UV lamps will not switch on	• Circuit breaker • Ground fault	• Check circuit breaker • Check ground fault	• Check both to see if either have tripped

5.9 SAFETY

These safety instructions are provided as general guidelines only for operation of the headworks facilities. They are not intended to replace existing plant safety instructions and procedures.

If there is any doubt whatsoever about the safety of performing any tasks related to the operation and maintenance of the equipment described here, do not proceed until the necessary protection is provided.

5.9.1 Motors and Electrical Panels

When working with electricity, you must always assume that there is sufficient voltage and current present to cause injury. As little as 12 volts or .005 amperes can be dangerous.

Whenever working on motors or electrical panels that are “hot,” still connected to the power source, or assumed to be “hot,” do not use your bare hands to perform any internal maintenance. The use of certified rubber electrician’s gloves with protective leather gloves covering them is recommended. Voltages in treatment plants can run in excess of 4,000 volts; therefore, the rubber gloves should be certified for no less than 10,000 volts.

Prior to working on any of the above-mentioned modules in place:

1. Open or place all control switches for the unit in the “**OFF**” position.
2. Open the main and control power circuit breakers and lock them open or remove the fuses. The open circuit breaker should be tagged to indicate the reason for its being locked open.
3. Open any foreign voltage circuits that may be present and lock and tag them.
4. Before starting work on the piece of equipment, check all exposed terminals or connections with a voltmeter before removing the rubber gloves.

5.9.2 Pumps

Before working on any of the pumps in the plant, open, lockout, and tag the main and control power circuits as described above. No pump should be worked on internally while the control and main power circuits are still “hot” (see above). Double-check both suction and discharge valves to be positive they are closed. Relieve the internal pressure on the pump before the inspection cover is removed or dismantling of the pump begins. While working on the pump, keep the area as neat and orderly as possible. If sludge or any of the pump lubricant is spilled, it should be cleaned up immediately to prevent falls or other types of injuries or, in the case of the sludge, extended exposure to potentially harmful organisms.

5.9.3 UV System

The inline UV unit is built for easy and efficient operation. People working on or in the direct vicinity of the system must be familiar with these instructions.

- Wear safety glasses to prevent eye injuries from UV light. Never look directly into a UV lamp when it is switched on.
- Do not unnecessarily expose your skin to UV radiation. Wear clean cotton gloves when handling the lamps. If you do have to hold the lamps, do so by the connectors.
- Remember UV lamps remain hot for a considerable time after they have been switched off. After use, allow the lamps to cool off for at least 15 minutes.
- The disinfection unit and the control unit have to be wired to a ground fault circuit breaker with sufficient capacity. Switch the power supply off before carrying out repair work and maintenance.
- Take account of the fact that the disinfection process will be ineffective if the lamps have not built up the correct operating temperature or if they have been switched off.
- The UV lamps contain mercury. Take defective lamps to a depot for chemical waste.
- Keep your work area clean and tidy and make sure it is properly illuminated.
- Keep control cabinets closed during normal use.
- Only use original Aquionics parts.
- Carry out proper maintenance on a regular basis.

The systems safety features are as follows:

- Effective protection against the UV radiation produced by the lamps.
- Safeguards to prevent the lamps and the power supply cabinet from overheating.
- Quality control of the UV lamps in order to monitor the liquid disinfection process.

5.9.3.1 Broken Lamps or Quartz Sleeves

The UV lamps contain a small amount of mercury. If a lamp breaks, the mercury has to be collected by binding it with sulphur powder. Carefully remove the mercury after collecting it and take it to a depot for chemical waste in accordance with local regulations. Avoid contact with the skin and eyes, do not breathe in any vapors, and make sure there is sufficient ventilation. If necessary, defective or burnt out lamps can be sent back to Aquionics.

If one of the quartz sleeves breaks, shut off the liquid supply pipes immediately and switch the system to off. Replace the defective parts and only switch the system on again when all respective internal safety procedures have been completed.

These safety instructions are provided as general guidelines only for operation of the headworks facilities. They are not intended to replace existing plant safety instructions and procedures.

If there is any doubt whatsoever about the safety of performing any tasks related to the operation and maintenance of the equipment described here, do not proceed until the necessary protection is provided.

5.9.4 Miscellaneous Items

When working on any piece of equipment, in place, keep the working area as orderly as possible. Keep safety barriers and rails in place when possible. When a safety barrier must be removed to permit access to a piece of equipment, caution should be used when outside of the barrier and be sure to replace the barrier when you are finished with the job.

5.9.4.1 Confined Spaces

Prior to entering a confined space, which has contained sewage, it should be thoroughly hosed down with clean water, any sludge pumped out or otherwise removed and properly ventilated. The operator should not enter alone and should be attached to a lifeline, attended above by another operator. If adequate ventilation and fresh air circulation cannot be provided, self-contained breathing equipment should be used. If this is not possible, an oxygen meter and explosive gas meter should be lowered into the confined space. These two meters should be kept in the work area while workers are present. Should either meter register a hazardous condition, do not enter the area until proper ventilation has been provided. If either meter registers a hazardous condition after work has begun, all of the workers should leave the work area until proper ventilation can be provided.

5.9.4.2 Uncovered Water-Filled Structures

Operators should always use extreme caution when working near uncovered water-filled structures. Most tanks or basins in a treatment plant that fall into this category are provided with protective barriers, i.e., hand rails, etc., to prevent someone from accidentally falling into the tank. Openings are provided in the railing to give access to the tanks; these should be used. Do not climb over or through the rails: This practice invites a fall. When the job is complete, reclose the opening in the barrier, and make sure it is secured.

5.9.4.3 Routine Operations

No job is so important nor is speed or completion that critical that safety procedures should be ignored. Your carelessness can involve not only your own safety, but also that of others. Follow safety regulations, use prescribed safety procedures, and above all else, think before you act. In addition, the following precautions should be observed.

1. Wear safety boots or shoes with nonskid soles.
2. Watch your footing when working on wet surfaces.

3. Keep all hoses and tools picked up and properly stored.
4. Keep the guards on all machinery during operation.
5. Walk – DO NOT RUN – down the stairs; use the handrail.
6. Keep your hands and tools away from moving equipment.

Before starting, stopping, or operating any of the equipment in the treatment plant, think about what hazards are created by these actions and what needs to be done to prevent these hazards from having an effect on the safe operation of the equipment.

5.10 MAINTENANCE

The plant should update any current maintenance procedures with the appropriate detailed information from the manufacturers' O&M manuals. The procedures and maintenance schedule recommended by the manufacturer's publications must be followed to maintain complete warranty coverage of the plant equipment and ancillary equipment. After the warranty period, revisions to the maintenance schedules should be based on the operation and maintenance experience and approved by a designated manager. The revisions should address the frequency of mechanical inspection based on the amount of wear observed during the warranty period.

Deuel Vocational Institution

New Wastewater Treatment Plant

O&M Manual
Chemical Systems

TABLE OF CONTENTS

Page No.

Chapter 6 6-1

6.1 GENERAL PROCESS DESCRIPTION 6-1
6.2 DESIGN CRITERIA 6-1
6.3 COMPONENT/EQUIPMENT LISTINGS 6-2
6.4 COMPONENT DESCRIPTION 6-3
6.4.1 Sodium Hypochlorite System 6-3
6.4.2 Citric Acid System 6-10
6.4.3 Alkalinity Addition 6-17
6.5 NORMAL OPERATION PROCEDURES 6-21
6.5.1 SHS System 6-21
6.5.2 CAS System 6-21
6.5.3 Sodium Bicarbonate System 6-23
6.5.4 Chemical Totes/Tanks 6-23
6.5.5 Chemical Metering Pumps 6-23
6.6 EMERGENCY OPERATION PROCEDURES 6-24
6.6.1 Power Outage 6-24
6.6.2 Equipment Malfunctions 6-24
6.6.3 Malfunctioning Pump 6-24
6.6.4 Malfunctioning Pump (running, but not pumping) 6-24
6.6.5 Malfunctioning Mixer 6-25
6.6.6 Malfunctioning Volumetric Feeder 6-25
6.6.7 Malfunctioning Volumetric Feeder (running, but not feeding) 6-25
6.7 STARTUP/SHUTDOWN PROCEDURES 6-25
6.7.1 SHS System 6-25
6.7.2 CAS System 6-27
6.7.3 Sodium Bicarbonate System 6-28
6.7.4 Chemical Totes and Tanks 6-29
6.7.5 Chemical Metering Pumps 6-29
6.8 ALARM CONDITIONS 6-30
6.8.1 Operational Strategies 6-30
6.9 SAFETY 6-33
6.9.1 Motors and Electrical Panels 6-33
6.9.2 Pumps 6-33
6.9.3 Miscellaneous Items 6-34
6.10 MAINTENANCE 6-35

Deuel Vocational Institution

New Wastewater Treatment Plant

O&M Manual
Disinfection System

TABLE OF CONTENTS
(Continued)

Page No.

LIST OF TABLES

Table 6.1 Chemical Systems Design Criteria 6-1
Table 6.2 Component/Equipment Listings 6-2

LIST OF FIGURES

Figure 6.1 Chemical System Plan View 6-4
Figure 6.2 Chemical System Section View 6-5

LIST OF PHOTOS

Photo 6.1 SHS Metering Pump No. 1 6-6
Photo 6.2 SHS Metering Pump No. 3 6-8
Photo 6.3 CAS Batch Tank and Mixer 6-11
Photo 6.4 CAS Batch Tank Local Control Panel 6-13
Photo 6.5 CAS Metering Pumps 6-14
Photo 6.6 UV Disinfection CAS Day Tank 6-16
Photo 6.7 Sodium Bicarbonate Silo 6-18
Photo 6.8 Sodium Bicarbonate Feeder and Local Control Panel 6-20
Photo 6.9 Silo System Truck Unloading Control Panel 6-21

CHEMICAL SYSTEMS

6.1 GENERAL PROCESS DESCRIPTION

Chemical usage includes sodium hypochlorite (NaOCl), citric acid, and sodium bicarbonate ($NaHCO_3$). Sodium hypochlorite solution (SHS) is used for routine membrane maintenance cleanings, recovery cleanings, and chlorine residual of plant water (3W). A citric acid solution (CAS) is used for (1) membrane maintenance cleanings and intense recovery cleanings, at an approximate concentration of 2,000 milligrams per liter (mg/L) and 4,000 mg/L respectively, and (2) cleaning the ultraviolet (UV) disinfection system using a five percent solution. Sodium bicarbonate solution (SBS) is used for supplementing alkalinity in the wastewater. When the activated sludge process is operated in nitrification mode, the process microorganisms may require more alkalinity than what is available in the wastewater. Process models estimate the addition of 135 mg/L as calcium carbonate ($CaCO_3$) is sufficient to promote full nitrification.

The SHS and CAS systems are contained in the Sludge Handling Facility. The SHS system consists of a 300-gallon chemical tote and the CAS system consists of a 500-gallon batch tank. The sodium bicarbonate system is located west of the headworks. The system will consist of a 1,500 cubic foot storage silo, volumetric feeder, and mixing tank.

6.2 DESIGN CRITERIA

The design criteria for the chemical systems are presented in Table 6.1.

Table 6.1 Chemical Systems Design Criteria
DVI New Wastewater Treatment Plant
California Department of Corrections and Rehabilitation

Description	Units	Value
Sodium Hypochlorite System		
Totes		
Concentration	%	12.5
Tote Capacity	Gallons	300
SHS Pump No. 1		
Type	Solenoid	
Number	--	1
Capacity	GPH	4
SHS Pump Nos. 2 and 3		
Type	Air Diaphragm	
Number	--	2
Capacity (Each)	GPH	40

Table 6.1 Chemical Systems Design Criteria DVI New Wastewater Treatment Plant California Department of Corrections and Rehabilitation		
Description	**Units**	**Value**
Citric Acid System		
CAS Batch Tank		
Number	--	1
Capacity	Gallons	600
CAS Batch Tank Mixer		
Type	Propeller	
Number	--	1
CAS Pump Nos. 1 and 2		
Type	Air Diaphragm	
Number	--	2
Capacity (Each)	GPH	240
Sodium Bicarbonate System		
Storage Silo		
Number		1
Capacity (Each)	CF	1500
Volumetric Feeder		
Number		1
Solids Feed Rate	lb/hr	62.5
Dissolving Tank		
Number		1
Capacity (Each)	Gallons	500

6.3 COMPONENT/EQUIPMENT LISTINGS

Table 6.2 is a listing of the major components and equipment items, including the function and purpose of each, for the chemical systems.

Table 6.2 Component/Equipment Listings
DVI New Wastewater Treatment Plant
California Department of Corrections and Rehabilitation

Name	Tag Numbers	Qty.	Characteristics	Function/Purpose
SHS Chemical Feed Pumps	10-FDR-210	1	4 GPH, Solenoid metering pump manufactured by LMI Milton Roy	Feeds SHS for chlorine residual of plant water
SHS Chemical Feed Pumps	10-FDR-220 10-FDR-230	2	40 GPH, Air diaphragm metering pumps manufactured by ARO Pump, Ingersoll Rand Company LTD	Feeds SHS for routine membrane maintenance cleanings and recovery cleanings

Table 6.2 Component/Equipment Listings DVI New Wastewater Treatment Plant California Department of Corrections and Rehabilitation				
Name	**Tag Numbers**	**Qty.**	**Characteristics**	**Function/Purpose**
CAS Batch Tank	10-TNK-xxx	1	600 gallons	Make up tank for CAS
CAS Batch Tank Mixer	10-MIX-300	1	Constant speed mixer manufactured by Neptune, Clamp mounted mixer	Mix dry citric acid with plant water
Citric Acid Chemical Feed Pumps	10-FDR-310 10-FDR-320	2	240 GPH, Air diaphragm metering pumps manufactured by ARO Pump, Ingersoll Rand Company LTD	Feeds CAS for membrane maintenance cleanings and recovery cleanings, and cleaning the UV disinfection system
Sodium Bicarbonate Silo	12-SIL-100	1	Steel, circular with conical bottom outlet	Store dry sodium bicarbonate
Sodium Bicarbonate Feeder	12-FDR-101	1	Volumetric feeder	Feed dry sodium bicarbonate into dissolving tank
Level Indicators	12-LE-100A	1		Measure level in silo
Sodium Bicarbonate Dissolving Tank	12-TNK-103	1	Steel rectangular tank	Sodium bicarbonate dissolving tank
Mixer	12-MIX-103	1		Mix dry sodium bicarbonate with plant water

6.4 COMPONENT DESCRIPTION

This chapter describes the general process and operation of systems used to deliver chemical to the different injection points. The major components of the chemical systems and their functions are outlined below. Figure 6.1 illustrates the layout of the Chemical System including the associated equipment and piping. Figure 6.2 shows the section for the Chemical System and associated equipment and piping.

6.4.1 Sodium Hypochlorite System

SHS is used for routine membrane maintenance cleanings, recovery cleanings, and chlorine residual of plant water (3W). The SHS system consists of 300-gallon totes, one solenoid pump (10-FDR-210), and two air-actuated diaphragm metering pumps (10-FDR-220 and 10-FDR-230). SHS Chemical Feed Pump No. 1 (10-FDR-210) is dedicated to providing SHS for chlorine residual of 3W. Photo 6.1 shows SHS Metering

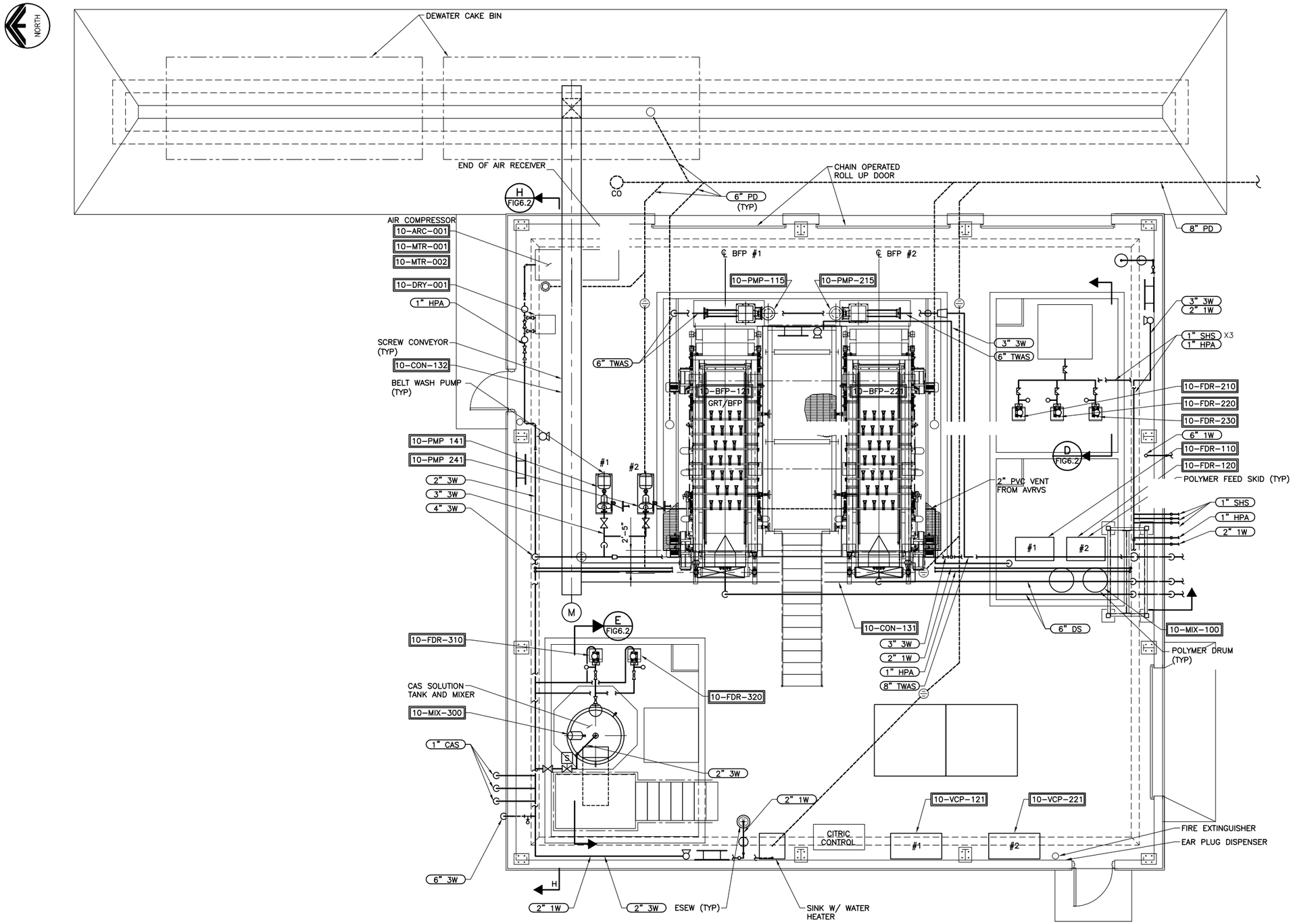

A PLAN – SOLIDS HANDLING FACILITY

Figure No. 6.1

CHEMICAL SYSTEM PLAN VIEW

DEUEL VOCATIONAL INSTITUTION (DVI) NEW WWTP

CALIFORNIA DEPARTMENT OF CORRECTIONS AND REHABILITATION

carollo

Engineers...Working Wonders With Water ™

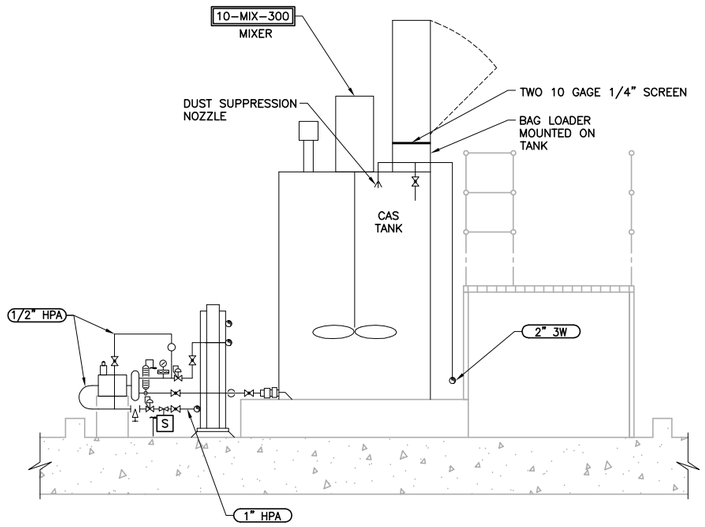

E FIG6.1 SECTION

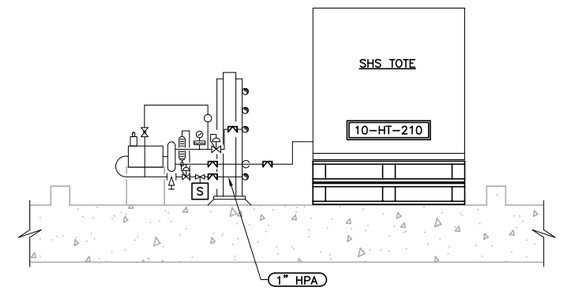

D FIG6.1 SECTION

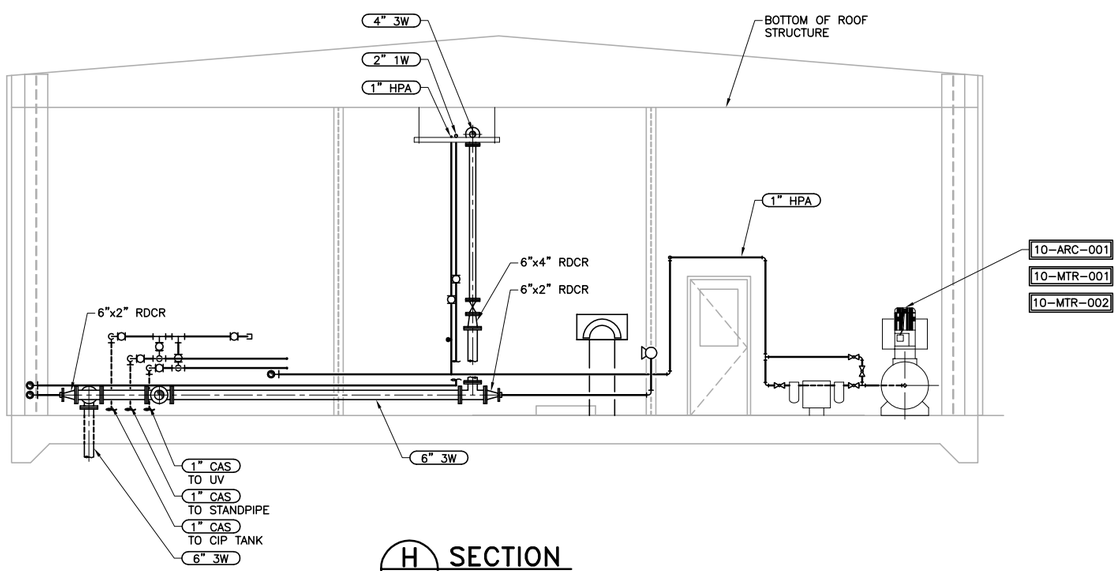

H FIG6.1 SECTION

Figure No. 6.2

CHEMICAL SYSTEM SECTION VIEW

DEUEL VOCATIONAL INSTITUTION (DVI) NEW WWTP

CALIFORNIA DEPARTMENT OF CORRECTIONS AND REHABILITATION

carollo

Engineers...Working Wonders With Water ™

SHS Metering Pump No. 1

PHOTO 6.1

California Department of Corrections
and Rehabilitation
Deuel Vocational Institution Wastewater Treatment Plant
Operations and Maintenance Manual

carollo
Engineers...Working Wonders With Water®

Pump No. 1. SHS Chemical Feed Pump Nos. 2 and 3 (10-FDR-220 and 10-FDR-230) are dedicated to providing SHS to the either the membrane bioreactor (MBR) Back Pulse pipe and/or to the clean-in-place (CIP) tank. Photo 6.2 shows SHS Metering Pump No. 3. Both the chemical tote(s) and pumps are located in the Sludge Handling Facility; refer to Figure 6.1 and 6.2. A calibration column is located on the suction side of each pump, allowing for manual calibration and verification of the dosage feed.

The neat SHS (12.5 percent) is fed to the process at the point of application for each of the membranes and to a single location in the 3W line. To establish chlorine residual in the plant water, the neat SHS is fed to the 8-inch 3W line. For membrane maintenance cleans, the neat SHS is fed to the 12-inch back pulse line at the appropriate feed rate to achieve a back pulse solution with a concentration of 200 mg/L SHS. For membrane recovery cleans, the SHS is fed to the CIP tank until the tank achieves a concentration of 2,000 mg/L of SHS.

CAUTION: SHS is manufactured by dissolving chlorine gas in a caustic soda solution. The final product is normally 12 to 15 percent SHS with a pH of greater than 10. If the chemical comes in contact with your skin, it causes a chemical burn that feels soapy and does not hurt immediately. The soapy feel is the high pH dissolving the top layers of skin. Take precautions to limit direct exposure to SHS. Always wear the proper safety equipment before trouble shooting chemical metering problems.

6.4.1.1 SHS 3W Metering Pumps

SHS Chemical Feed Pump No. 1 (10-FDR-210) is dedicated to providing SHS for chlorine residual of 3W.

The SHS metering pump has an associated vendor control panel (VCP) with associated valves and piping and is operated independently of the others.

6.4.1.1.1 *SHS 3W Metering Pump Controls*

SHS Pump No. 1 (10-FDR-210) can be controlled by the programmable logic controller (PLC), through the supervisory control and data acquisition (SCADA) system, or locally using START/STOP pushbuttons and the LOCAL-OFF-REMOTE (L-O-R) selector switch at the VCP, which is located adjacent to the SHS pumps in the Sludge Handling Facility. The operational status and alarms of each SHS pumps is displayed at the SCADA system.

1. With the L-O-R selector switch at the VCP in the **LOCAL** position, the selected SHS pump is controlled manually by the operator using the **START/STOP** pushbuttons and adjust the feed rate. In addition, the operator can manually adjust the pump stroke length at the pump.
2. With the L-O-R selector switch at the VCP in the **OFF** position, the selected SHS pump is prohibited from running.

SHS Metering Pump No. 3

PHOTO 6.2

California Department of Corrections
and Rehabilitation
Deuel Vocational Institution Wastewater Treatment Plant
Operations and Maintenance Manual

carollo
Engineers...Working Wonders With Water®

3. With the L-O-R selector switch at the VCP in the **REMOTE** position, the selected SHS pump is controlled through the PLC:
   a. With the HAND-OFF-AUTO selector switch at the pop-up window in the **HAND** position, the selected SHS pump is controlled manually by the operator using the **START/STOP** selector and adjust stroke control to the pump.
   b. With the HAND-OFF-AUTO selector switch at the pop-up window in the **OFF** position, the selected SHS pump is prohibited from running.
   c. With the HAND-OFF-AUTO selector switch at the pop-up window in the **AUTO** position, the selected SHS pump is controlled by the PLC.

Normal operation for SHS Pump No. 1 (10-FDR-210) is REMOTE-AUTO control mode. In REMOTE-AUTO control mode, the operator has the option to select one of two operating modes: (1) CYCLE or (2) TIME-OF-DAY. Running in CYCLE mode, an operator will select a fixed speed and cycle time for the pump to operate. In TIME-OF-DAY mode, the operator will input a fixed speed, which will be a function of the time of day, for the pump to operate. There will be six “time zones” for the operator to input the pump speed. The end of one cycle shall signify the beginning of the next. The length of each time zone shall be independently adjustable.

6.4.1.2 SHS Membrane CIP/Backpulse Metering Pumps

One duty pump and one standby pump is provided for the SHS Membrane CIP/Backpulse application (10-FDR-220 and 10-FDR-230). The SHS Membrane CIP/Backpulse pumps are air fed pumps and the flow rate is controlled through a pressure regulator on the air line. The pressure regulator is manually adjusted to provide the flow rate desired.

The pump discharge has a pulsation dampener, pressure gauge, high pressure relief valve, and backpressure regulator. The pulsation dampener absorbs the pressure surge caused by the pulse of the diaphragm-metering pump. If the discharge pressure gauge is bouncing erratically, check for proper charge pressure on the dampener per the manufacturer’s recommendations. The high-pressure relief valve is a safety device, which vents chemical in the event of a blocked line. If a chemical line is plugged, this will bleed the excess pressure so the line does not exceed 80 pounds per square inch (psi) and break. Normally this valve is closed and can be heard when venting. The backpressure regulator keeps 10-psi backpressure on the pump so the ball check valves will seat and allow the proper operation of the pump. The backpressure regulator also prevents vacuum developed from the carrier water from drawing chemical out of the tank.

6.4.1.2.1 *SHS Membrane Metering Pump Controls*

SHS Feed Pump Nos. 2 and 3 (duty 10-FDR-220 and standby 10-FDR-230) are controlled by the PLC, through the SCADA system. The operational status and alarms of each CAS feed pumps is displayed at the SCADA system.

1. With the HAND-OFF-AUTO selector switch at the pop-up window in the **HAND** position, the selected SHS pump air solenoid valve is controlled manually by the operator using the **START/STOP** selector.
2. With the HAND-OFF-AUTO selector switch at the pop-up window in the **OFF** position, the selected SHS pump air solenoid valve is prohibited from running.
3. With the HAND-OFF-AUTO selector switch at the pop-up window in the **AUTO** position, the selected SHS pump air solenoid valve is controlled by the PLC.

Normal operation for the SHS feed pump is AUTO control mode. In AUTO control mode, the PLC controls the operation of the pump. Using the flow signal from the magnetic flowmeter of the backpulse/permeate pumps (04-FIT-100, 04-FIT-200, 04-FIT-300, and 04-FIT-400), the PLC uses an algorithm to calculate the appropriate pump feed rate to achieve the correct SHS concentration for the application (i.e., maintenance or recovery clean). For detailed information regarding the membrane cleaning procedures, please refer to Chapter 4, Section 4.4.4 MBR Cleaning System. In addition to the information presented, the equipment manufacturer's operations and maintenance (O&M) manual should be consulted for normal operation procedure and maintenance schedules.

6.4.2 Citric Acid System

CAS is used for periodic maintenance and recovery cleanings of the MBR System (Back Pulse Pipe and CIP Tank) and also for the maintenance cleanings of the UV Disinfection System. The CAS system consists of one 600-gallon CAS batch tank, a mixer, a bag hopper, and two 240 grams per hour (GPH), air diaphragm metering pumps (10-FDR-310 for membranes; 10-FDR-320 for UV system). The tank and pumps are located in the Sludge Handling Facility; refer to Figure 6.1 and 6.2.

Dry citric acid and 3W are combined in the CAS batch tank for membrane and UV cleaning. Initially, a five percent CAS is created in the CAS batch tank; however, this is operator adjustable. For cleaning of the UV system, the five percent CAS is directly transferred from the CAS batch tank to the CAS Day Tank (07-TNK-010).

For membrane maintenance cleans, the 5 percent CAS is fed to the 12-inch backpulse line at the appropriate feed rate to achieve a backpulse CAS of 2,000 mg/L. For membrane recovery cleans, the five percent CAS is fed to the CIP tank until the tank achieves a concentration of 4,000 mg/L of CAS.

6.4.2.1 <u>CAS Batch Tank</u>

The bag hopper holds the dry citric acid and delivers it to the 60-gallon CAS batch tank (10-TK-300) at a controlled feed rate. The CAS batch tank has a mixer (10-MIX-300) that operates continuously. Photo 6.3 shows the Caustic Batch Tank and Mixer. The dry chemical is mixed with 3W until fully dissolved. The 3W is piped to the CAS batch tank for dilution. The CAS feed pumps feed the 5 percent CAS to the process at the

CAS Batch Tank and Mixer

PHOTO 6.3

California Department of Corrections
and Rehabilitation
Deuel Vocational Institution Wastewater Treatment Plant
Operations and Maintenance Manual

carollo
Engineers...Working Wonders With Water®

point of application for each of the membranes and UV system CAS Day Tank (07-TNK-010).

6.4.2.1.1 *CAS Batch Tank Controls*

The liquid level in the CAS Batch Tank is continuously monitored at the PLC. The tank level readings are compared to the operator-inputted Low-level and Low Low-level setpoints. If the tank level falls below the Low-level setpoint, a notification will signal on the SCADA screen and the PLC will make up more of the five-percent CAS. If the tank level falls below the Low Low-level setpoint, an alarm will signal on the SCADA screen and stop the duty CAS feed pump. If the tank level rises above the High High-level fill setpoint, an alarm beacon will activate at the local control panel (LCP), 10-LCP-300, and duty CAS feed pump will stop. An alarm will also be sent to the SCADA system, notifying the operator. Until the Low Low-level is RESET, the CAS feed pump can be manually controlled in HAND mode. To operate in AUTO mode again, the operator must correct the problem and reinitiate operation at the LCP. A photo of the Caustic Batch Tank Local Control Panel is shown in Photo 6.4.

6.4.2.2 Membrane CAS Feed Pump

CAS will be fed to the process at the point of application in the membrane area with a single air diaphragm pump (duty 10-FDR-310 and standby 10-FDR-320). The CAS Feed Pumps are air fed pumps and the flow rate is controlled through a pressure regulator on the air line. The pressure regulator is manually adjusted to provide the flow rate desired.

The pump discharge has a pulsation dampener, pressure gauge, high-pressure relief valve, and backpressure regulator. The pulsation dampener absorbs the pressure surge caused by the pulse of the diaphragm-metering pump. If the discharge pressure gauge is bouncing erratically, check for proper charge pressure on the dampener per the manufacturer's recommendations. The high-pressure relief valve is a safety device, which vents chemical in the event of a blocked line. If a chemical line is plugged this will bleed the excess pressure so the line does not exceed 80 psi and break. Normally, this valve is closed and can be heard when venting. The backpressure regulator keeps 10-psi backpressure on the pump so the ball check valves will seat and allow the proper operation of the pump. The backpressure regulator also prevents vacuum developed from the carrier water from drawing chemical out of the tank. Photo 6.5 shows Caustic Metering Pump Nos. 1 and 2.

6.4.2.2.1 *Membrane CAS Feed Pump Controls*

CAS Feed Pump Nos. 1 and 2 (duty 10-FDR-310 and standby 10-FDR-320) are controlled by the PLC, through the SCADA system. The operational status and alarms of each CAS feed pumps is displayed at the SCADA system.

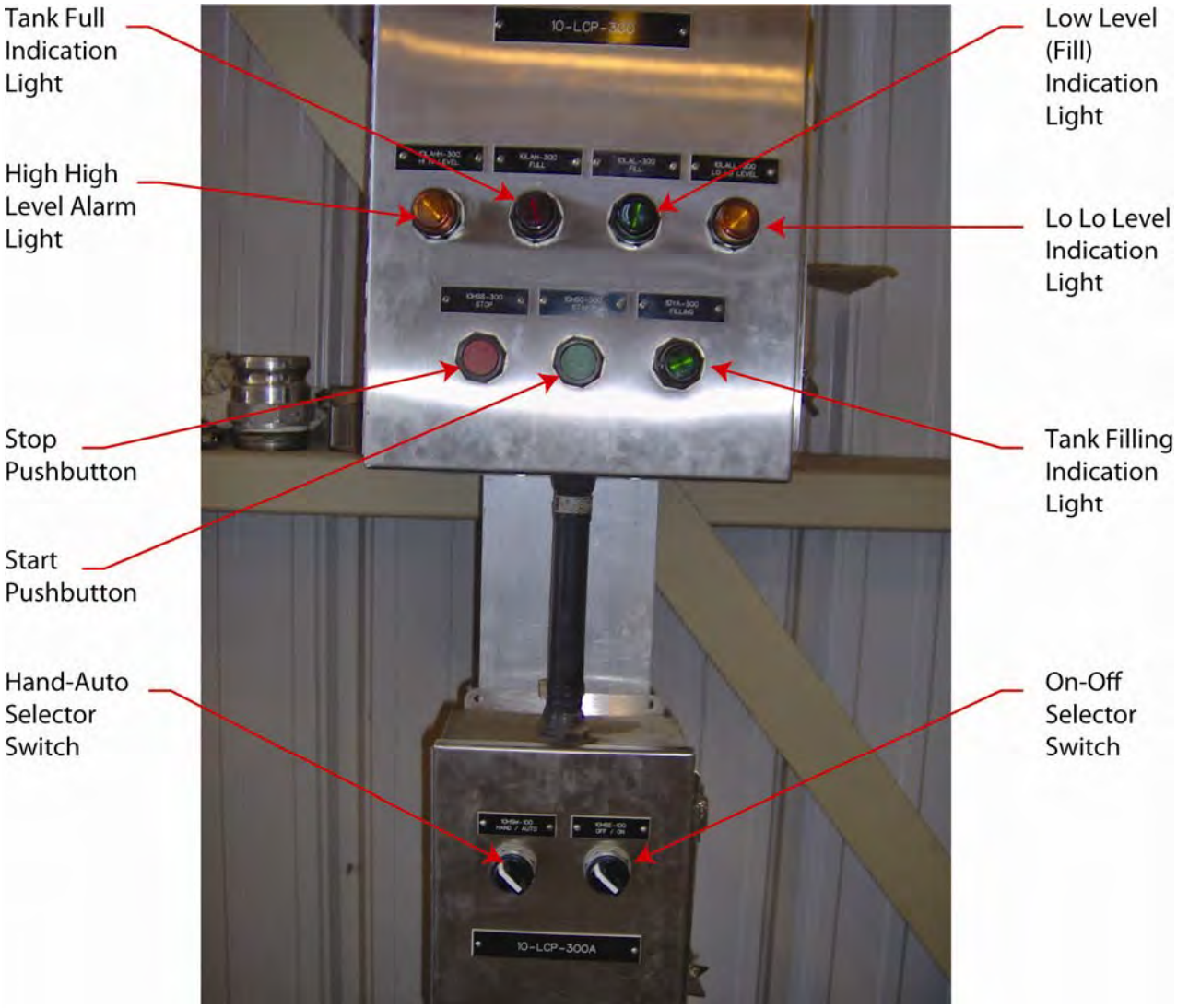

CAS Batch Tank Local Control Panel

PHOTO 6.4

California Department of Corrections
and Rehabilitation
Deuel Vocational Institution Wastewater Treatment Plant
Operations and Maintenance Manual

carollo
Engineers...Working Wonders With Water®

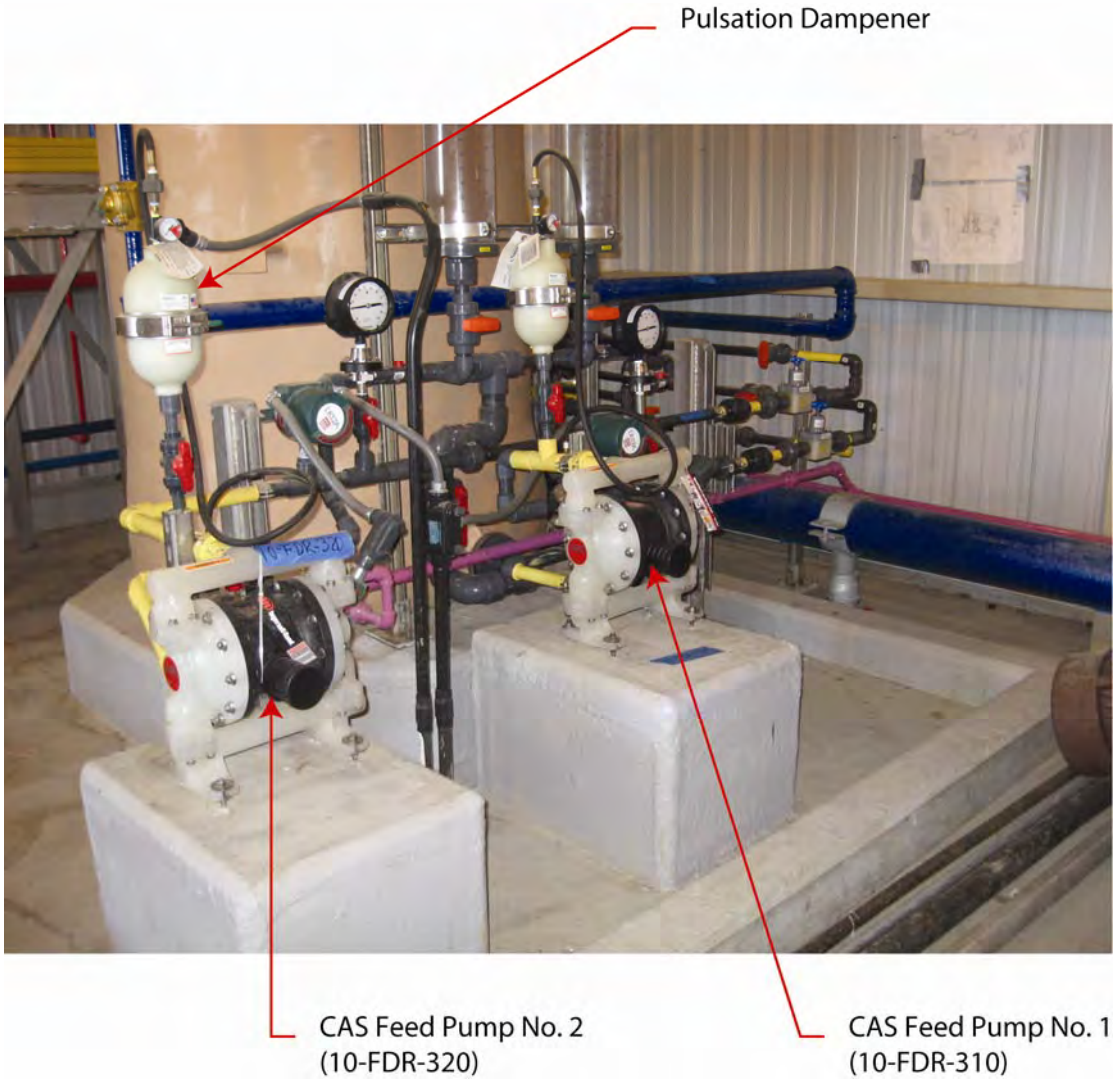

CAS Metering Pumps

PHOTO 6.5

California Department of Corrections
and Rehabilitation
Deuel Vocational Institution Wastewater Treatment Plant
Operations and Maintenance Manual

carollo
Engineers...Working Wonders With Water®

1. With the HAND-OFF-AUTO selector switch at the pop-up window in the **HAND** position, the selected CAS pump air solenoid valve is controlled manually by the operator using the **START/STOP** selector.

2. With the HAND-OFF-AUTO selector switch at the pop-up window in the **OFF** position, the selected CAS pump air solenoid valve is prohibited from running.

3. With the HAND-OFF-AUTO selector switch at the pop-up window in the **AUTO** position, the selected CAS pump air solenoid valve is controlled by the PLC.

Normal operation for the CAS feed pump is AUTO control mode. In AUTO control mode, the pump is controlled as required by the Membrane supplier PLC via the Plant PLC. For detailed information regarding the membrane cleaning procedures, please refer to Chapter 4, Section 4.4.4 MBR Cleaning System. In addition to the information presented, the equipment manufacturer's O&M manual should be consulted for normal operation procedure and maintenance schedules.

6.4.2.3 CAS Day Tank Feed Pump

CAS will be fed from the CAS batch tank to the UV disinfection system CAS day tank (07-TNK-010) for cleaning purposes by a single diaphragm pump (13-FDR-320). Photo 6.6 shows the CAS Day Tank. The CAS UV supply pump is an air fed pump and the flow rate is controlled through a pressure regulator on the air line. The pressure regulator is manually adjusted to provide the flow rate desired. A calibration column allows for manual calibration and verification of the dosage feed.

6.4.2.3.1 *UV CAS Feed Pump Controls*

CAS Feed Pump Nos. 1 and 2 (duty 13-FDR-310 and standby 13-FDR-320) are controlled by the PLC, through the SCADA system. The operational status and alarms of each CAS feed pump is displayed at the SCADA system.

1. With the HAND-OFF-AUTO selector switch at the pop-up window in the **HAND** position, the selected CAS pump solenoid valve is controlled manually by the operator using the **START/STOP** selector.

2. With the HAND-OFF-AUTO selector switch at the pop-up window in the **OFF** position, the selected CAS pump solenoid valve is prohibited from running.

3. With the HAND-OFF-AUTO selector switch at the pop-up window in the **AUTO** position, the selected CAS pump solenoid valve is controlled by the PLC.

Normal operation for the CAS feed pump is AUTO control mode. In AUTO control mode, the pump is automatically controlled through the PLC based on receiving a signal from the UV system. Chemical is used upon the activation of the wiping mechanism or on a preset time interval.

UV Disinfection CAS Day Tank

PHOTO 6.6

California Department of Corrections
and Rehabilitation
Deuel Vocational Institution Wastewater Treatment Plant
Operations and Maintenance Manual

carollo
Engineers...Working Wonders With Water®

H:\Client\CDC SAC\6927\6927R11 - DVI - DD and CD Phase\O&M Manual\O&MManualPhotos\WordFiles\PhotoNo6.6.doc

6.4.3 Alkalinity Addition

Operation of the nitrification treatment process consumes a substantial portion of the alkalinity present in the influent wastewater. Alkalinity is the natural buffer against pH changes. If the alkalinity is consumed in the biological processes at the plant, the pH may drop to a level that may inhibit proper nitrification and buffering capacity of the effluent. The tertiary effluent alkalinity should remain above 60 mg/L to assure proper nitrification and buffering capacity.

The purpose of the SBS is to improve the performance and stability of the wastewater treatment process through addition of sodium bicarbonate as a supplemental alkalinity source. The addition of sodium bicarbonate increases the pH of the wastewater and increases the alkalinity of the system to ensure that full nitrification can take place in the biological treatment process while maintaining a tertiary effluent with buffering capacity.

6.4.3.1 Sodium Bicarbonate System

Sodium bicarbonate ($NaHCO_3$) is added to the WWTP influent channel after the grit removal system to maintain the pH and alkalinity required by the nitrification process. The chemical is added at a constant rate to ensure that the alkalinity is sufficient to provide the necessary pH buffering for the nitrification process.

Sodium bicarbonate is a safe chemical that directly provides alkalinity to the secondary treatment process. Sodium bicarbonate or sodium hydrogen carbonate, also known as baking soda and bicarbonate of soda, is a soluble white anhydrous or crystalline chemical compound with a slight alkaline taste resembling that of sodium carbonate. Sodium bicarbonate is mined from natural mineral deposits in the west and is also produced artificially. It is the best choice to meet small or intermittent alkalinity needs.

The sodium bicarbonate system (SBS) is located west of headworks. The system consists of one complete feeding train. The train includes a 1,500 cubic foot storage silo, dust collector, bin gate, volumetric feeder, and a dissolving tank equipped with a mixer. Figure 6.1 shows a layout of the SBS.

The steel storage silo holds the dry chemical. The Sodium Bicarbonate Silo is shown in Photo 6.7. The silo design includes a single floor equipment room; live bin bottom style silo cone for non-free-flowing chemicals, and a gravity fed batch style chemical solution/slurry preparation system. The silo has a dust collector and a high-level switch used when filling. The dust collector consists of a bag shaker and a fan, which runs continuously during the truck unloading process. This reduces the amount of dust in the surrounding air. A high-level switch prevents silo overflow. The silo also has two mechanical vibrators on the conical section. The vibrators help maintain a steady flow of dry chemical to the volumetric feeders through manually operated bin gates.

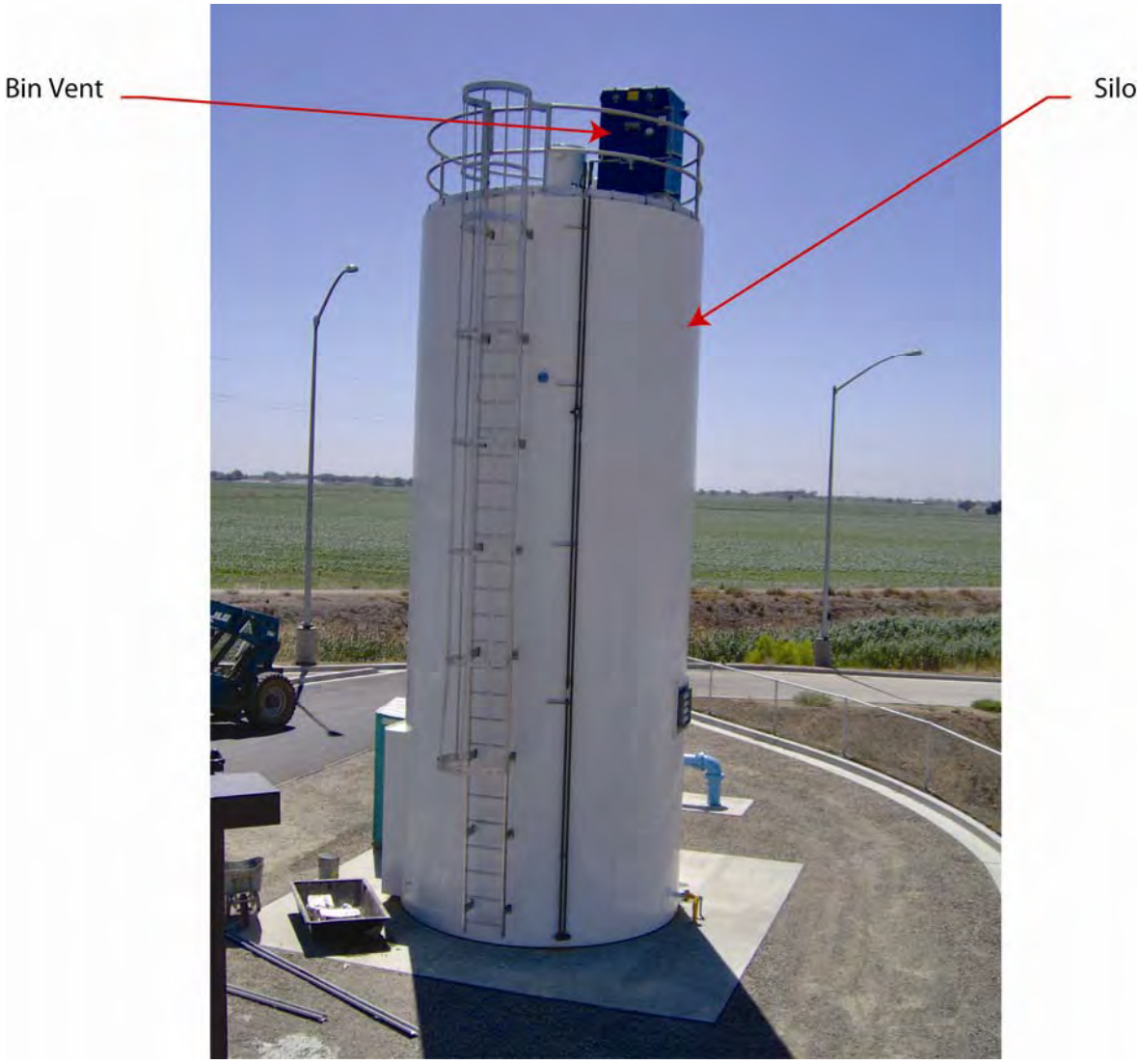

Sodium Bicarbonate Silo

PHOTO 6.7

California Department of Corrections
and Rehabilitation
Deuel Vocational Institution Wastewater Treatment Plant
Operations and Maintenance Manual

H:\Client\CDC SAC\6927\6927R11 - DVI - DD and CD Phase\O&M Manual\O&MManualPhotos\WordFiles\PhotoNo6.7.doc

carollo
Engineers...Working Wonders With Water®

A volumetric feeder screw delivers the dry chemical to the dissolving tank at a controlled feed rate. The dissolving tank has a mixer that operates continuously, as long as the feeder is in service. The dry chemical is mixed with 3W until fully dissolved. The 3W is piped to the dissolving tank for dilution. Each 3W has a rotameter and a manual throttling valve to control flow rate. A motor-operated isolation valve provides automatic flow control. The chemical solution is gravity fed in a 4-inch pipe to the 14-inch aeration tank influent pipe.

6.4.3.1.1 ***Sodium Bicarbonate System Controls***

The SBS control system is used for metering, blending and feeding chemical, control of dilution/carrier water, silo level monitoring, defining system settings (alarms, levels, volumes), calibration of chemical feeder, alarm annunciation with recommended corrective action, and help screens. A separate control panel is provided for filling the storage silo. In addition to the information presented, the equipment manufacturer's O&M manual should be consulted for normal operation procedure and maintenance schedules.

6.4.3.1.1. SBS Control System

The SBS control system has an L-O-R selector switch and START/STOP pushbutton located on the LCP. The LCP is located adjacent to the equipment. Both LOCAL and REMOTE modes are available through the operator interface system (OIS) touch screen.

In LOCAL mode, a button is provided adjacent to the device to manually START and STOP the device. For the volumetric feed rate controls, INCREASE/DECREASE buttons on the LCP are provided to manually control the chemical feed. Additionally, in LOCAL mode, no interlocks are provided and the alarms are disabled. A photo of the Sodium Bicarbonate Feeder and Local Control Panel is shown in Photo 6.8.

Normally, the process operates in REMOTE mode. In REMOTE mode, the system operates based on operator defined system settings at the OIS. The operator may (1) START/STOP the system, (2) OPEN/CLOSE the dilution water valve, (3) START/STOP tank mixer, and (4) adjust the volumetric feed rate; which is controlled from user supplied 4-20 mA pacing signal.

In LOCAL mode, no interlocks are provided and the alarms are disabled. In REMOTE mode, several devices are interlocked. The dilution water valve opens, the tank mixer starts, and the volumetric feeder begins feeding chemical. Visual indication of the SBS system mode and status is provided on the OIS. Also displayed on the OIS is alarm indications with recommended corrective action.

Alarm Horn

1 - Horn Test Pushbutton
2 - Alarm Silence Pushbutton
3 - Silo Level Monitor
4 - Control Power On
5 - Control Power Disconnect Switch
6 - Silo High-High Level Light
7 - Silo Reorder Level Light
8 - Silo Low-Low Level Light
9 - Emergency Stop Pushbutton
10 - Bin Activator Off-On Selector Switch
11 - Bin Activator Running Light
12 - Bin Activator Overload Light
13 - Bin Activator Cycle Timer
14 - System Local-Off-Remote Selector Switch
15 - Solenoid Close-Open Selector Switch
16 - Solenoid Open Light
17 - Low Water Pressure Alarm Light
18 - Feeder Rate Indicator
19 - Feeder Off-On Selector Switch
20 - Feeder Running Light
21 - Feeder Overload Alarm Light
22 - Feeder Speed Control
23 - Mixer Off-On Selector Switch
24 - Mixer Running Light
25 - Mixer Overload Alarm Light
26 - Feeder Speed Local-Remote Selector Switch

Volumetric Feeder

Stovepipe Volumetric Feeder

Sodium Bicarbonate Feeder and Local Control Panel

PHOTO 6.8

California Department of Corrections and Rehabilitation
Deuel Vocational Institution Wastewater Treatment Plant Operations and Maintenance Manual

carollo
Engineers...Working Wonders With Water®

6.4.3.1.1. Silo Fill Control System

The silo fill control system has a LCP that includes: (1) LOW, RE-ORDER, and FULL silo level push-to-test type indicating lights, (2) an alarm horn with push-to-test button and silence button, and (3) a dust collector HAND-OFF-AUTO selector switch. A photo of the Silo System Truck Unloading Control Panel is shown in Photo 6.9.

In addition to the LCP, a limit switch is provided on the silo fill pipe connection. Thus, when the fill line is connected to the fill pipe connection, and the bin vent is in auto mode, the limit switch will activate the bin vent for automatic operation.

During silo fill, the pulsejet type bin vent senses differential pressure across the filter media and automatically and sequentially pulses high-pressure air to continuously clean the filter during the fill cycle.

6.5 NORMAL OPERATION PROCEDURES

This section describes operation of the chemical systems after they have been started and are ready for normal operation. Startup/shutdown and safety check procedures are discussed in other sections of this manual.

In addition to the information presented, the equipment manufacturer's O&M manual should be consulted for normal operation procedure and maintenance schedules.

6.5.1 SHS System

1. Daily, review operational logs.
2. Daily, inspect the totes and connections.
3. Daily, check the operation of each pump:
    a. Check pump discharge pressure for high reading or excessive movement.
    b. Check for high-pressure relief valve for sound.
    c. Check the drive motor for excessive noise, heat, or vibration.
    d. Check valve alignment for proper chemical dosing.

6.5.2 CAS System

1. Daily, review operational logs.
2. Daily, inspect the totes and connections.
3. Daily, check the operation of each pump:
    a. Check pump discharge pressure for high reading or excessive movement.
    b. Check for high-pressure relief valve for sound.
    c. Check the drive motor for excessive noise, heat, or vibration.
    d. Check valve alignment for proper chemical dosing.

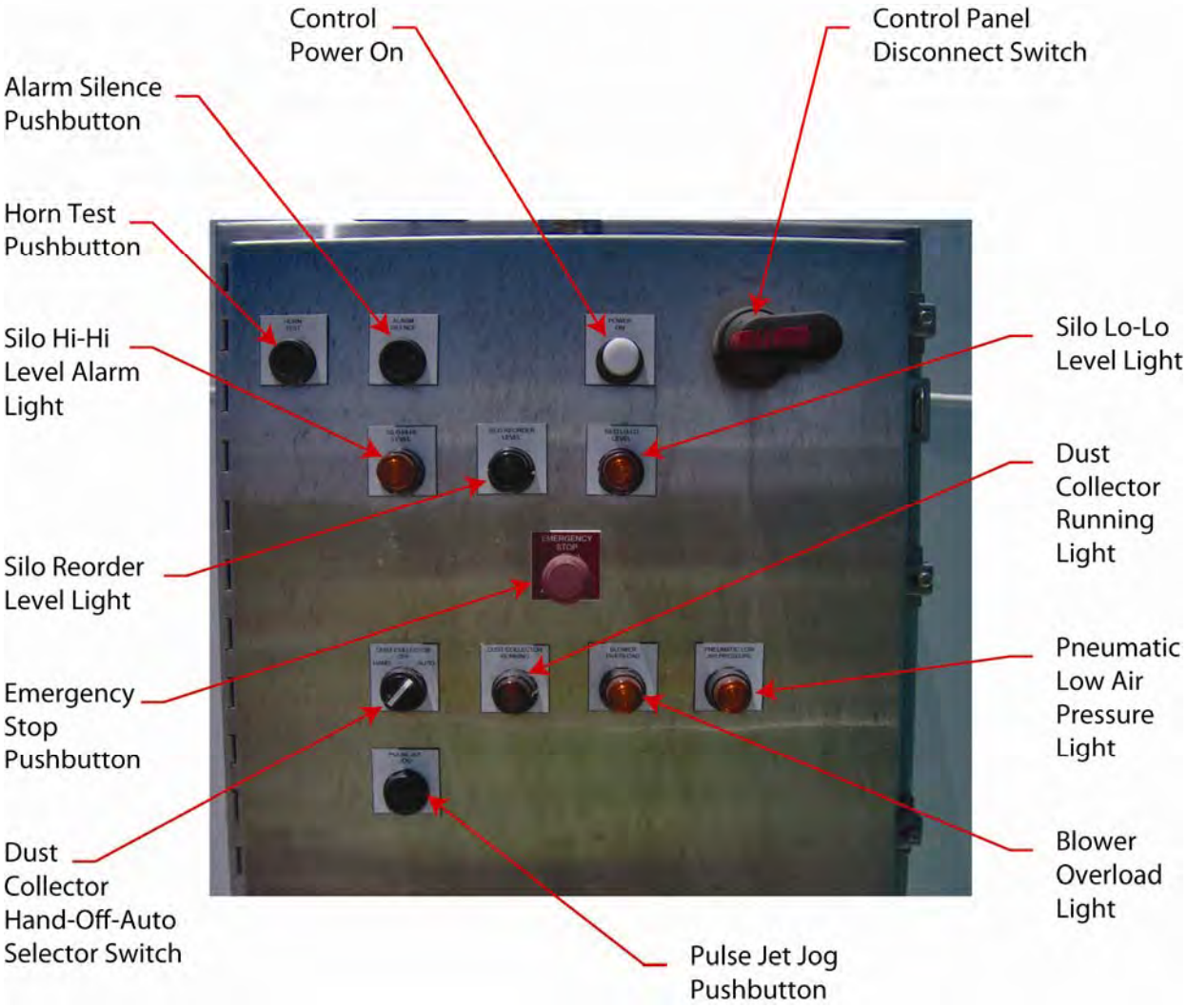

Silo System Truck Unloading Control Panel

PHOTO 6.9

6.5.2.1 Mixing Tank

1. Daily, check level in mixing tank.
2. Daily, check the operation of the mixer.
3. Weekly, inspect the tank and connections.
4. Weekly, check operation of hopper and pumps for excessive noise, heat, or vibration.
5. Weekly, check analyzers and sample pumps for proper operation.

6.5.3 Sodium Bicarbonate System

6.5.3.1 Silo and Feeder

1. Inspect systems once per shift.
2. Daily, check operation of volumetric feeder to ensure unit is operating.
3. Carry out maintenance, including cleanup and washdown.
4. Take samples as required.
5. Complete log entries once per shift.

6.5.3.2 Mixing Tank

1. Daily, check level in mixing tank.
2. Daily, check the operation of the mixer.

6.5.4 Chemical Totes/Tanks

1. Daily, check tote level and order chemicals, if necessary.
2. Daily, check the CAS/SHS area for leaks or the development of stains showing spilled chemical.
3. Daily, check SHS pump for excessive noise, heat, or vibration.
4. Monthly, check the feed line basket strainer for debris.

6.5.5 Chemical Metering Pumps

1. Daily, check the operation of each pump:
   a. Check pump discharge pressure for high reading or excessive movement.
   b. Check for high-pressure relief valve for sound.
   c. Check the drive motor for excessive noise, heat, or vibration.
   d. Check valve alignment for proper chemical dosing.
2. Daily, check level of liquid in sump.
3. Monthly, perform a calibrated pump down and check pump capacity.

6.6 EMERGENCY OPERATION PROCEDURES

This section describes the operation of the chemical systems under emergency circumstances. Scenarios for different emergency conditions are given, followed by suggested corrective actions to be taken.

6.6.1 Power Outage

1. In the event of a power outage, after an adjustable time delay, the emergency generator will start. The chemical systems will re-start if placed in remote-automatic control. Once restarted, the equipment will resume operation at previous setpoints. Verify equipment has started properly.
2. After utility power has been restored and the plant is switched from standby to utility power, the equipment will once again restart if in remote-automatic mode. Verify equipment has started properly.
3. Equipment in local or remote-manual mode will require manual restart.

6.6.2 Equipment Malfunctions

1. Motors or pumps with excessive vibration, unusual noise, overheating, or lubrication leakage should be shutdown. The unit should not be operated until the reason for these unusual observations has been corrected.
2. Motors that shutdown due to current imbalance or over current should be taken out of service immediately. Either of these types of failures indicates serious problems that should be investigated by an electrician prior to restarting the equipment. Shutdowns of this nature are common during electrical problems and a single attempt to restart is justified in this situation.
3. Pumps with excessive packing or seal leakage can be operated as long as the leaking water does not travel close to electrical or instrumentation equipment. Correct the leakage as soon as time permits.

6.6.3 Malfunctioning Pump

1. If alarm sounds, acknowledge and reset.
2. Attempt to restart pump once.
3. If pump fails to start or trips out, stop and lockout the pump. Isolate the pump by closing the suction and discharge valves.
4. Align suction and discharge valves to allow an adjacent pump to serve as backup.
5. Make necessary repairs to the pump and replace in service.

6.6.4 Malfunctioning Pump (running, but not pumping)

1. Check chemical tank level and suction and discharge valves for level and alignment.

2. Check high-pressure relief valve for venting.
3. Try running the pump at 100 percent speed and stroke to clear check valves.
4. If pump fails to start or trips out, stop and lockout the pump. Isolate the pump by closing the suction and discharge valves.

6.6.5 Malfunctioning Mixer

1. If alarm sounds, acknowledge and reset.
2. Attempt to restart mixer once.
3. If mixer fails to start or trips out, stop and lockout the mixer.

6.6.6 Malfunctioning Volumetric Feeder

1. If alarm sounds, acknowledge and reset.
2. Attempt to restart volumetric feeder once.
3. If motor fails to start or trips out, stop and lockout the volumetric feeder.
4. Make necessary repairs to the pump and replace in service.

6.6.7 Malfunctioning Volumetric Feeder (running, but not feeding)

1. Check sodium bicarbonate tank level and knife gate position, make sure knife gate is open.
2. Run tank vibrator to make sure that no pocket has formed within the silo.
3. If feeder fails to start or trips out, stop and lockout the pump.

6.7 STARTUP/SHUTDOWN PROCEDURES

The following is a brief description of the unit process startup and shutdown procedures. Refer to the equipment O&M manuals for specific information regarding lubrication and specific equipment checks.

6.7.1 SHS System

6.7.1.1 <u>Pre-Startup and Safety Check</u>

1. Connect SHS tote.
2. Perform normal operation checks.
3. Align suction and discharge valves to the chemical metering pumps for the proper discharge location.
4. Vent air out of high spots.

6.7.1.2 Startup

6.7.1.2.1 *SHS Chemical Feed Pump No. 1*

1. Check pump connections.
2. Switch the breaker for 10-VCP-210 at lighting panel (10-LP-001) to "**ON**."
3. Turn power "**ON**" and position the L-O-R selector switch to **LOCAL** at 10-VCP-210.
4. Start chemical metering pump in local control.
5. Perform a calibrated pump down to verify proper operation.
6. Check pump discharge pressure for high reading.
7. Position the L-O-R selector switch to **REMOTE** at 10-VCP-210.
8. From the Sodium Hypochlorite Screen in SCADA, click on SHS Chemical Feed Pump No. 1 Icon and select/enter the following:
   a. HAND-OFF-AUTO selector switch at the pop-up window is in the **AUTO** mode.
   b. Select either CYCLE or TIME-OF-DAY mode.

6.7.1.2.2 *SHS Chemical Feed Pump No. 2 and 3*

1. Check pump(s) connections.
2. Check Air Compressor.
3. From the Sodium Hypochlorite Screen in SCADA, click on SHS Chemical Feed Pump Nos. 2 and 3 solenoid valve Icon and select/enter the following:
   a. HAND-OFF-AUTO selector switch at the pop-up window is in the **LOCAL** mode.
   b. Position the START/STOP selector switch to **START**.
4. Perform a calibrated pump down to verify proper operation.
5. Check pump discharge pressure for high reading.
6. From the Sodium Hypochlorite Screen in SCADA, click on SHS Pump Nos. 2 and 3 solenoid valve Icon and select/enter the following:
   a. HAND-OFF-AUTO selector switch at the pop-up window is in the **AUTO** mode.

6.7.1.3 Shutdown

6.7.1.3.1 *SHS Chemical Feed Pump No. 1*

1. Position the L-O-R selector switch to "**OFF"** and turn power "**OFF**" at 10-VCP-210.
2. If there is a reason why the pump should not be operated, padlock its breaker at lighting panel (10-LP-001) in the "**OFF**" position and attach a signed and dated "**DO NOT OPERATE**" tag indicating the problem.

6.7.1.3.2 *SHS Chemical Feed Pump No. 2 and 3*

1. From the Sodium Hypochlorite Screen in SCADA, click on SHS Pump Nos. 2 and 3 solenoid valve Icon and select/enter the following:
   a. Position the START/STOP selector switch to **STOP**.
   b. HAND-OFF-AUTO selector switch at the pop-up window is in the **OFF** mode.

6.7.2 CAS System

6.7.2.1 <u>Pre-Startup and Safety Check</u>

1. Connect CAS tote.
2. Perform normal operation checks.
3. Align suction and discharge valves to the chemical metering pumps for the proper discharge location.
4. Vent air out of high spots.

6.7.2.2 <u>Startup</u>

6.7.2.2.1 *CAS Hopper and Mixer*

1. Switch the breaker for 10-LCP-300 at lighting panel (10-LP-001) to "**ON**."
2. Turn power "**ON**" and position the L-O-R selector switch to **AUTO** at 10-LCP-300 to start filling tank with plant water.

6.7.2.2.2 *CAS Hopper and Mixer*

1. Switch the breaker for 10-LCP-300A at lighting panel (10-LP-001) to "**ON**."
2. Turn power "**ON**" and position the L-O-R selector switch to **AUTO** at 10-LCP-300A.

6.7.2.2.3 *CAS Chemical Feed Pumps Nos. 1 and 2*

1. Check pump(s) connections.
2. Check Air Compressor.
3. From the Citric Acid System Screen in SCADA, click on CAS Chemical Feed Pump Nos. 1 and/or 2 solenoid valve Icon and select/enter the following:
   a. HAND-OFF-AUTO selector switch at the pop-up window is in the **LOCAL** mode.
   b. Position the START/STOP selector switch to **START**.
4. Perform a calibrated pump down to verify proper operation.
5. Check pump discharge pressure for high reading.
6. From the Citric Acid System Screen in SCADA, click on CAS Chemical Feed Pump Nos. 1 and/or 2 solenoid valve Icon and select/enter the following:
   a. HAND-OFF-AUTO selector switch at the pop-up window is in the **AUTO** mode.

6.7.2.3 Shutdown

1. From the Citric Acid System Screen in SCADA, click on CAS Chemical Feed Pump Nos. 1 and/or 2 solenoid valve Icon and select/enter the following:
   a. Position the START/STOP selector switch to **STOP**.
   b. HAND-OFF-AUTO selector switch at the pop-up window is in the **OFF** mode.

6.7.3 Sodium Bicarbonate System

6.7.3.1 Pre-Startup and Safety Check

1. Connect SBS tote.
2. Perform normal operation checks.
3. Align suction and discharge valves to the chemical metering pumps for the proper discharge location.
4. Vent air out of high spots.

6.7.3.2 Startup

1. Enable the dust collector fan(s) and shaker(s) for automatic control.
2. Fill the dry chemical storage bin(s).
3. Open plant water isolation and tank effluent valves.
4. Enable plant water automatic valve(s) for automatic control.
5. Enable the volumetric feeder(s) for remote operation.
6. Select feeder operation from the VCP.
7. For feeder operation from the SCADA system, select manual or automatic mode.
8. Start chemical feeder.
9. Start bin vibrators.
10. Start the dissolving tank mixes.

6.7.3.3 Shutdown

1. Shut off the bin vibrators.
2. Disable the volumetric feeder.
3. Shut down dissolving tank mixers.
4. Close and disable the plant water supply line valve(s).
5. Close the dissolving tank(s) effluent valves.
6. For an extended shutdown, the dissolving tank(s) should be drained.

6.7.4 Chemical Totes and Tanks

6.7.4.1 Startup

1. Inspect the chemical tank, check that all equipment is out of the tank and the drain and outlet valves are closed.
2. Fill the tank with water and let sit for 24 hours. Check for tank bottom leaks by observing a drop in level or wet concrete.
3. Drain the tank to the building sump. Drain the building sump.
4. Align tank valves to vent properly and supply chemical metering pumps.
5. Load the chemical tank.
6. Perform normal operation checks.

6.7.4.2 Shutdown

1. Continue to draw chemical out of the chemical tank until just before the metering pumps lose suction.
2. Verify other chemical tote is full and sufficient chemical is on site and ordered to maintain operation of the process. When the chemical tote is empty, put the other tote in service.
3. If required, fill the tote/tank with water to rinse process. Drain the chemical tote/tank to the building sump. Remove the tank connections.
4. If a tote, remove old tote and replace with a new tote.

6.7.5 Chemical Metering Pumps

6.7.5.1 Startup

1. Align suction and discharge valves to the chemical metering pumps and for the proper discharge location.
2. Vent air out of high spots.
3. Start pump in local control. Set stroke so pump will operate at 30 percent speed or higher in automatic.
4. Perform a calibrated pump down to verify proper operation.
5. Check pump discharge pressure for high reading or excessive movement.
6. Check for high-pressure relief valve for sound.
7. Check carrier water for proper alignment and operation.
8. Check the drive motor for excessive noise, heat, or vibration.
9. Place pump in remote automatic control and establish set points in the PLC.

6.7.5.2 Shutdown

1. Close suction and discharge valves.
2. Stop and lockout the pump.
3. Turn off chemical mixers.
4. If required, flush chemical metering pipes.

6.8 ALARM CONDITIONS

This section describes alarm conditions that can occur during operation of the chemical systems. The alarms provide for the operational surveillance of the facilities, alerting operators to abnormal conditions. Alarm conditions are annunciated either at the OIS, motor control centers (MCCs), and/or at LCPs.

6.8.1 Operational Strategies

When an alarm occurs, the operator acknowledges the alarm at the LCP, MCC, or OIS, examines the process condition on the OIS, LCP, or MCC, and takes corrective action. The operator then proceeds to the equipment or area originating the alarm. At the equipment (assuming that it is a safe location) that originated the alarm, the operator assesses the problem and determines the actions required. The established plant safety procedures are to be observed during all operations, including operation under emergency conditions.

The following sections contain descriptions of each alarm, its indication, possible causes, and suggested response actions.

6.8.1.1 SHS System

6.8.1.1.1 *Pump Fail Alarm*

Indication: An overload alarm is indicated at the OIS.

Action:

1. Acknowledge the alarm.
2. Backup pump should have started automatically.
3. Check and reset the motor.
4. Check for excessive vibration, unusual noise, or overheating of drive or gear box.
5. If the pump fails again, stop and lockout the motor and investigate reason for failure.

6.8.1.1.2 *Pump High-Pressure Alarm*

Indication: A high-pressure alarm is indicated at the OIS. Pump will not run.

Action:

1. Acknowledge the alarm at the OIS.
2. Check discharge valve alignment.
3. Check for activation of high-pressure switch.
4. Reset the pump, check operating pressures.
5. Investigate for plugged line.

6.8.1.2 CAS System

6.8.1.2.1 *Pump Fail Alarm*

Indication: An overload alarm is indicated at the OIS.

Action:

1. Acknowledge the alarm.
2. Backup pump should have started automatically.
3. Check and reset the motor.
4. Check for excessive vibration, unusual noise, or overheating of drive or gear box.
5. If the pump fails again, stop and lockout the motor and investigate reason for failure.

6.8.1.2.2 *Pump High-Pressure Alarm*

Indication: A high-pressure alarm is indicated at the OIS. Pump will not run.

Action:

1. Acknowledge the alarm at the OIS.
2. Check discharge valve alignment.
3. Check for activation of high-pressure switch.
4. Reset the pump, check operating pressures.
5. Investigate for plugged line.

6.8.1.3 Sodium Bicarbonate System

6.8.1.3.1 *Volumetric Feeder*

Indication: An overload alarm is indicated at the OIS.

Action:

1. Acknowledge the alarm at the OIS.
2. Stop and lockout feeder.

3. Check feeder for free movement.
4. Restart feeder once.
5. If feeder fails again, lockout feeder and make provisions to determine problem. If necessary, hand feed sodium bicarbonate following shutdown procedures to ensure alkalinity does not drop below the required amount for nitrification.

6.8.1.3.2 *Silo Level*

Indication: A low-level alarm is indicated at the OIS.

Action:

1. Acknowledge the alarm at the OIS.
2. Check logs to see if low level indicated is correct.
3. If level indicated is correct, order sodium bicarbonate.

6.8.1.3.3 *Chemical Mixer*

Indication: A fail alarm is indicated at the OIS for one of the mixers.

Action:

1. Acknowledge the alarm at the OIS.
2. Stop and lockout mixer.
3. Check mixer for free movement.
4. Restart mixer once.
5. If mixer fails again, increase SHS dosage 10 percent to compensate for poor mixing. Consider switching dose location to secondary clarifier weir.
6. Lockout mixer and make provisions to determine problem. If necessary, remove basin from service following shutdown procedures.

6.8.1.3.4 *Sample Pump Alarm*

Indication: An overload alarm is indicated at the MCC and OIS.

Action:

1. Acknowledge the alarm at the OIS.
2. Check and reset the motor.
3. Check for excessive vibration, unusual noise, or overheating of drive or gear box.
4. If the pump fails again, stop and lockout the motor. Change the process control set point to flow pacing. Collect grab samples for process control monitoring until the sample pump can be fixed.

5. If the pump will be out of service for longer than 24 hours, switch off chlorine analyzer and remove buffer bottle.

6.9 SAFETY

These safety instructions are provided as general guidelines only for operation of the headworks facilities. They are not intended to replace existing plant safety instructions and procedures.

If there is any doubt whatsoever about the safety of performing any tasks related to the operation and maintenance of the equipment described here, do not proceed until the necessary protection is provided.

6.9.1 Motors and Electrical Panels

When working with electricity, you must always assume that there is sufficient voltage and current present to cause injury. As little as 12 volts or .005 amperes can be dangerous.

Whenever working on motors or electrical panels that are “hot,” still connected to the power source, or assumed to be “hot,” do not use your bare hands to perform any internal maintenance. The use of certified rubber electrician’s gloves with protective leather gloves covering them is recommended. Voltages in treatment plants can run in excess of 4,000 volts; therefore, the rubber gloves should be certified for no less than 10,000 volts.

Prior to working on any of the above-mentioned units in place:

1. Open or place all control switches for the unit in the “**OFF**” position.
2. Open the main and control power circuit breakers and lock them open or remove the fuses. The open circuit breaker should be tagged to indicate the reason for its being locked open.
3. Open any foreign voltage circuits that may be present and lock and tag them.
4. Before starting work on the piece of equipment, check all exposed terminals or connections with a volt meter before removing the rubber gloves.

6.9.2 Pumps

Before working on any of the pumps in the plant, open, lock-out, and tag the main and control power circuits as described above. No pump should be worked on internally while the control and main power circuits are still “hot” (see above). Double-check both suction and discharge valves to be positive they are closed. Relieve the internal pressure on the pump before the inspection cover is removed or dismantling of the pump begins. While working on the pump, keep the area as neat and orderly as possible. If sludge or any of the pump lubricant is spilled, it should be cleaned up immediately to prevent falls or other types of injuries or, in the case of the sludge, extended exposure to potentially harmful organisms.

6.9.3 Miscellaneous Items

When working on any piece of equipment, in place, keep the working area as orderly as possible. Keep safety barriers and rails in place when possible. When a safety barrier must be removed to permit access to a piece of equipment, caution should be used when outside of the barrier and be sure to replace the barrier when you are finished with the job.

6.9.3.1 Confined Spaces

Prior to entering a confined space, which has contained sewage, it should be thoroughly hosed down with clean water, any sludge pumped out or otherwise removed and properly ventilated. The operator should not enter alone, but should be attached to a lifeline attended above by another operator. If adequate ventilation and fresh air circulation cannot be provided, self-contained breathing equipment should be used. If this is not possible, an oxygen meter and explosive gas meter should be lowered into the confined space. These two meters should be kept in the work area while workers are present. Should either meter register a hazardous condition, do not enter the area until proper ventilation has been provided. If either meter registers a hazardous condition after work has begun, all of the workers should leave the work area until proper ventilation can be provided.

6.9.3.2 Uncovered Water-Filled Structures

Operator should always use extreme caution when working near uncovered water-filled structures. Most tanks or basins in a treatment plant that fall into this category are provided with protective barriers, i.e., hand rails, etc., to prevent someone from accidentally falling into the tank. Openings are provided in the railing to give access to the tanks; these should be used. Do not climb over or through the rails; this practice invites a fall. When the job is complete, reclose the opening in the barrier, and make sure it is secured.

6.9.3.3 Routine Operations

No job is so important nor is speed or completion that critical that safety procedures should be ignored. Your carelessness can involve not only your own safety, but also that of others. Follow safety regulations, use prescribed safety procedures, and above all else, think before you act. In addition, the following precautions should be observed.

1. Wear safety boots or shoes with nonskid soles.
2. Watch your footing when working on wet surfaces.
3. Keep all hoses and tools picked up and properly stored.
4. Keep the guards on all machinery during operation.
5. Walk – DO NOT RUN – down the stairs; use the handrail.
6. Keep your hands and tools away from moving equipment.

7. Before starting, stopping, or operating any of the equipment in the treatment plant, think about what hazards are created by these actions and what needs to be done to prevent these hazards from having an effect on the safe operation of the equipment.

6.10 MAINTENANCE

Plant staff has a maintenance program in place. This program should be updated with appropriate detailed information from the manufacturer's O&M manuals. Further revisions to the maintenance programs should be made based on operation and maintenance experience.

Deuel Vocational Institution

New Wastewater Treatment Plant

O&M Manual
Effluent Cooling and Disposal

TABLE OF CONTENTS

Page No.

Chapter 7 7-1

7.1 GENERAL PROCESS DESCRIPTION 7-1
7.2 DESIGN CRITERIA 7-1
7.3 COMPONENT/EQUIPMENT LISTINGS 7-2
7.4 COMPONENT DESCRIPTION 7-3
7.4.1 Effluent Composite Sampler 7-3
7.4.2 Standpipe 7-3
7.4.3 Effluent Cooling System 7-3
7.5 NORMAL OPERATION PROCEDURES 7-13
7.5.1 Effluent Sampler 7-13
7.5.2 Standpipe 7-13
7.5.3 Effluent Cooling System 7-13
7.5.4 Parshall Flume 7-14
7.6 EMERGENCY OPERATION PROCEDURES 7-14
7.6.1 Power Outage 7-14
7.6.2 Equipment Malfunctions 7-14
7.7 STARTUP/SHUTDOWN PROCEDURES 7-14
7.7.1 Standpipe 7-15
7.7.2 Cooling Tower 7-15
7.7.3 Parshall Flume 7-16
7.8 ALARM CONDITIONS 7-16
7.8.1 Operational Strategies 7-17
7.8.2 Troubleshooting Strategies 7-18
7.9 SAFETY 7-19
7.9.1 Motors and Electrical Panels 7-19
7.9.2 Pumps 7-20
7.9.3 Miscellaneous Items 7-20
7.10 MAINTENANCE 7-21

LIST OF TABLES

Table 7.1 Design Criteria 7-1
Table 7.2 Component/Equipment Listings 7-2
Table 7.3 Typical Cooling Tower Setpoints 7-12
Table 7.4 Cooling Tower Fan and Flow Setpoints 7-12
Table 7.5 Troubleshooting Guide For Cooling Towers 7-19

Deuel Vocational Institution

New Wastewater Treatment Plant

O&M Manual
Effluent Cooling and Disposal

TABLE OF CONTENTS
(Continued)

Page No.

LIST OF FIGURES

Figure 7.1 Cooling Towers Plan View and Sections 7-4
Figure 7.2 Standpipe Plan View and Section 7-5
Figure 7.3 Standpipe Sections 7-6

LIST OF PHOTOS

Photo 7.1 Standpipe 7-7
Photo 7.2 Cooling Towers 7-8
Photo 7.3 Cooling Tower No. 3 Local Control Panel 7-11

EFFLUENT COOLING AND DISPOSAL

7.1 GENERAL PROCESS DESCRIPTION

An effluent composite sampler collects disinfected flow from the common header before the flow enters the standpipe. The effluent composite samples are used for laboratory tests that are performed in accordance with the Deuel Vocational Institution (DVI) New Wastewater Treatment Plant (WWTP) NPDES permit.

Membrane effluent is delivered from the standpipe (08-TNK-104) to the cooling towers (09-CT-110, 09-CT-120, and 09-CT-130) through a weir. The weir ensures consistent pressure to the cooling towers is maintained. The cooling towers (09-CT-110, 09-CT-120, and 09-CT-130) decrease the temperature of effluent before discharge into Deuel Drain, a tributary to Paradise Cut and the San Joaquin River. The cooling towers are of the cross flow type and are located northeast of the UV disinfection building.

The plant water (3W) system also takes water from the standpipe; during periods of high demand, the 3W system may cause the elevation in the standpipe to drop below the weir. In this case, flow to the cooling towers will be interrupted. Because these cooling towers are gravity fed, pump will not need to be primed.

If the plant effluent is below the receiving water temperatures, it may bypass the cooling towers. A Parshall flume downstream of the cooling towers measures the plant effluent flow. The final effluent from the WWTP connects with the existing 14-inch diameter effluent pipeline.

7.2 DESIGN CRITERIA

The design criteria for the standpipe, cooling towers, and effluent metering are presented in Table 7.1.

Table 7.1 Design Criteria
DVI New Wastewater Treatment Plant
California Department of Corrections and Rehabilitation

Description	Units	Value
Standpipe		
Type	Welded Stainless Steel	
Number	--	1
Volume	Gallons	10,600
Diameter	FT	10
Height	FT	18

Table 7.1 Design Criteria DVI New Wastewater Treatment Plant California Department of Corrections and Rehabilitation		
Description	**Units**	**Value**
Cooling Towers		
Type	Crossflow Open Circuit, gravity water distribution	
Number	--	2 + 1 Standby
Maximum Capacity (Total)	mgd	3.0
Firm Capacity (one unit out of service)	mgd (gpm)	2.0 (1390)
Minimum Capacity (Each)	GPM	350
Capacity (Each)	GPM	700
Effluent Parshall Flume		
Throat Width	Inch	9
Minimum Capacity	mgd	0.06
Maximum Capacity	mgd	5.73

7.3 COMPONENT/EQUIPMENT LISTINGS

Table 7.2 is a listing of the major components and equipment items, including the function and purpose of each, for the standpipe, cooling towers, and disposal processes.

Table 7.2 Component/Equipment Listings DVI New Wastewater Treatment Plant California Department of Corrections and Rehabilitation				
Name	**Tag No(s).**	**Qty.**	**Characteristics**	**Function/Purpose**
Standpipe	08-TNK-104	1	10,600-gallon, Welded Stainless Steel Tank	Plant water supply and provide sufficient hydraulic head for disinfected effluent to be processed by cooling towers
Cooling Towers	09-CT-110 09-CT-120 09-CT-130	3	Crossflow Open Circuit, gravity water distribution	Decrease plant effluent temperature
Effluent Composite Sampler	09-ASP-100	1	HACH, Refrigerated Sampler	Automatic sampling of plant effluent flow
Major Instruments				
Parshall Flume Flow Transmitter	09-FIT-001	1	0-3,000 gpm, Parshall Flume 9-inch throat width	Monitor effluent flow from WWTP

7.4 COMPONENT DESCRIPTION

The major components of the Effluent Cooling and Disposal facility and their functions are outlined below. Figure 7.1 illustrates the layout and the sections of the Cooling Towers including the associated equipment and piping. Figure 7.2 illustrates the layout and the section of the Standpipe including the associated equipment and piping. Figure 7.3 shows the sections for the Standpipe and associated equipment and piping.

7.4.1 Effluent Composite Sampler

The effluent composite auto sampler (09-ASP-100) is maintained by the plant staff and used for collecting samples over a 24-hour period. A photo of the Effluent Composite Sampler is shown in Photo 7.1. The auto sampler collects flow-proportionate samples and composites the aliquots in a five-gallon polyethylene jug. The sampler collects flow from the 12-inch disinfected effluent (DE) entering the standpipe; refer to Figure 7.2. During each sampling event, positive purges before and after each aliquot sampling prevents clogging and cross connection. The composite sample is maintained between 0 and 4 degrees Celsius. The external power source for the influent composite sampler originates from lighting panel 07-LP-001, which is located in ultraviolet (UV) electrical room.

7.4.2 Standpipe

The standpipe is fed by membrane permeate pumps after it has passed through UV disinfection. The standpipe serves three purposes, to provide: (1) water for the plant water pumps, (2) backpulse water for membranes, and (3) sufficient hydraulic head for disinfected effluent to flow through the cooling towers by gravity. Thus, the standpipe eliminates the need for additional pumps, which may have become a potential interruption in the process flow through the WWTP; refer to Photo 7.1.

7.4.3 Effluent Cooling System

The cooling towers are used to control the temperature of the plant effluent.

7.4.3.1 <u>Cooling Tower</u>

Cross flow cooling towers (09-CT-110, 09-CT-210, 09-CT-310) reject heat from a system through an evaporation-based system. Water to be cooled is distributed in the tower by gravity nozzles over the two wet decks (also called fill), which exposes a very large water surface area to atmospheric air. Air is drawn over the wet deck by the fan at the top of the cooling tower. A portion of the water absorbs heat and changes from a liquid to a vapor at constant pressure. This heat of vaporization at atmospheric pressure is transferred from the water remaining in the liquid state to the air stream, which cools the water; much the same way your body cools you by sweating. Photo 7.2 shows the Cooling Towers.

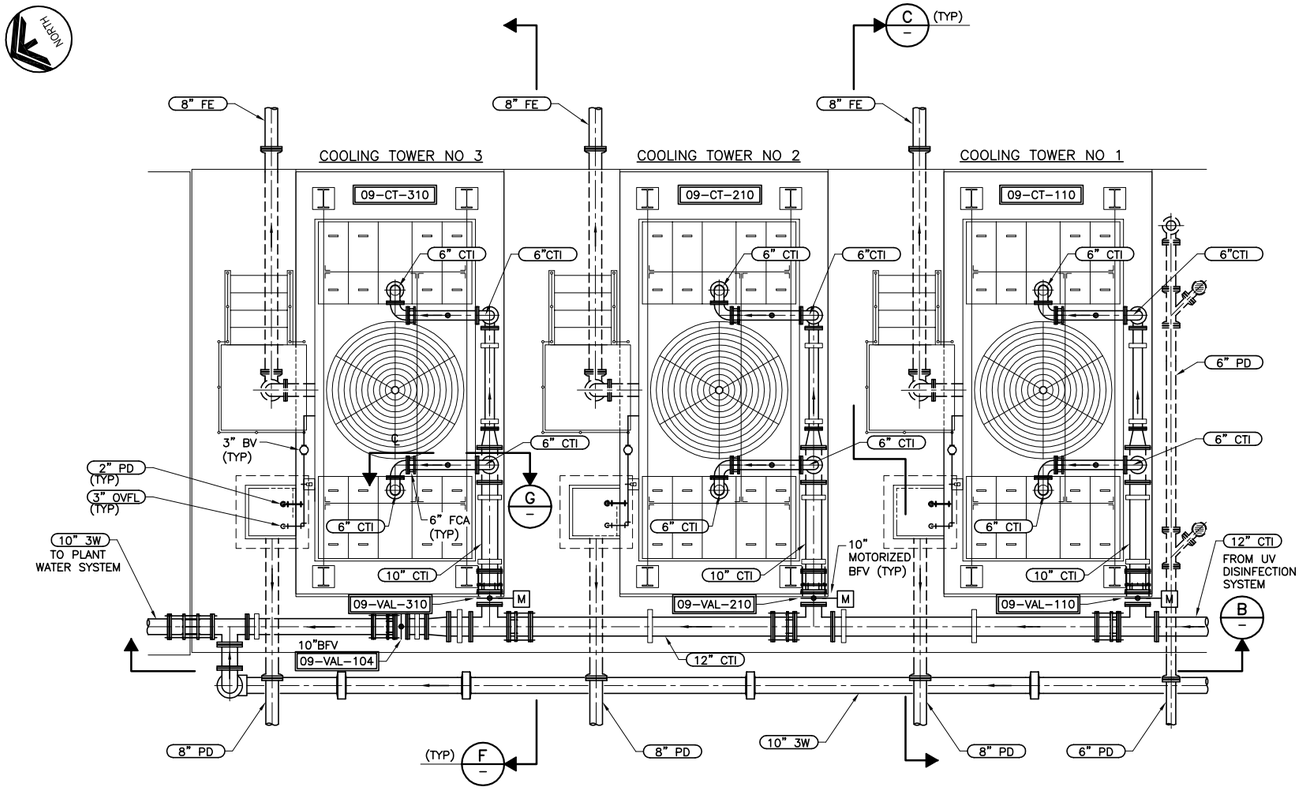

A PLAN – COOLING TOWERS

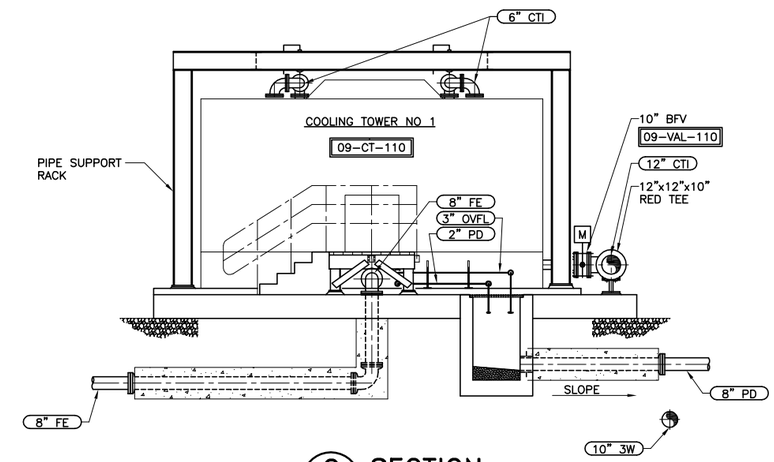

C SECTION

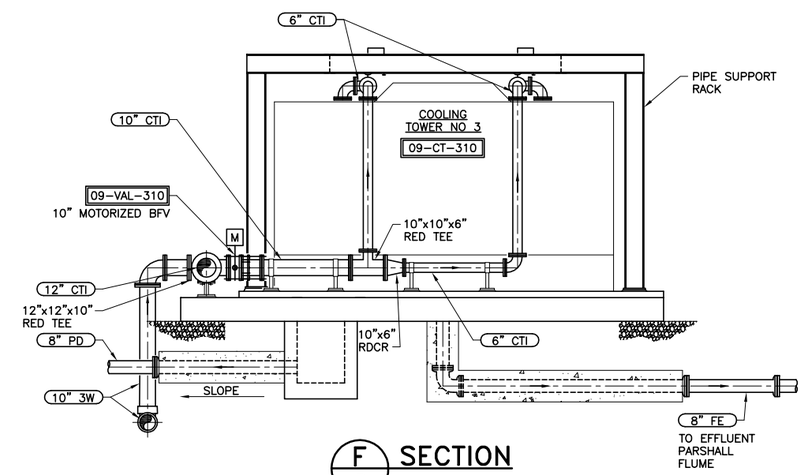

F SECTION

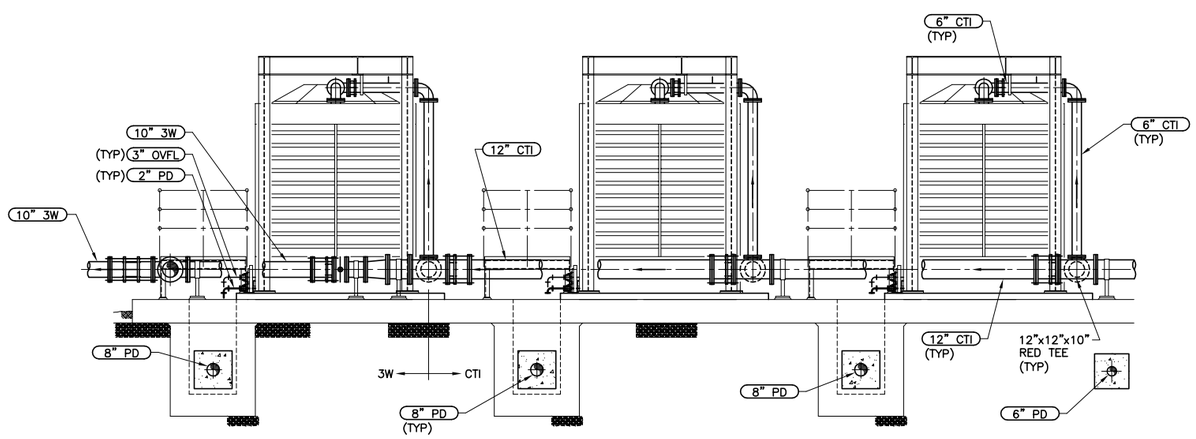

B SECTION

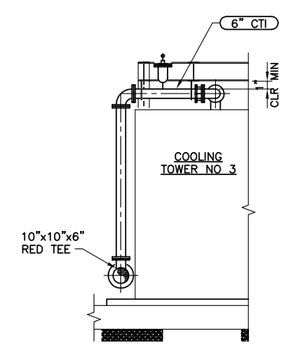

G SECTION

Figure No. 7.1

COOLING TOWERS PLAN VIEW AND SECTIONS

DEUEL VOCATIONAL INSTITUTION (DVI) NEW WWTP

CALIFORNIA DEPARTMENT OF CORRECTIONS AND REHABILITATION

carollo

Engineers...Working Wonders With Water ™

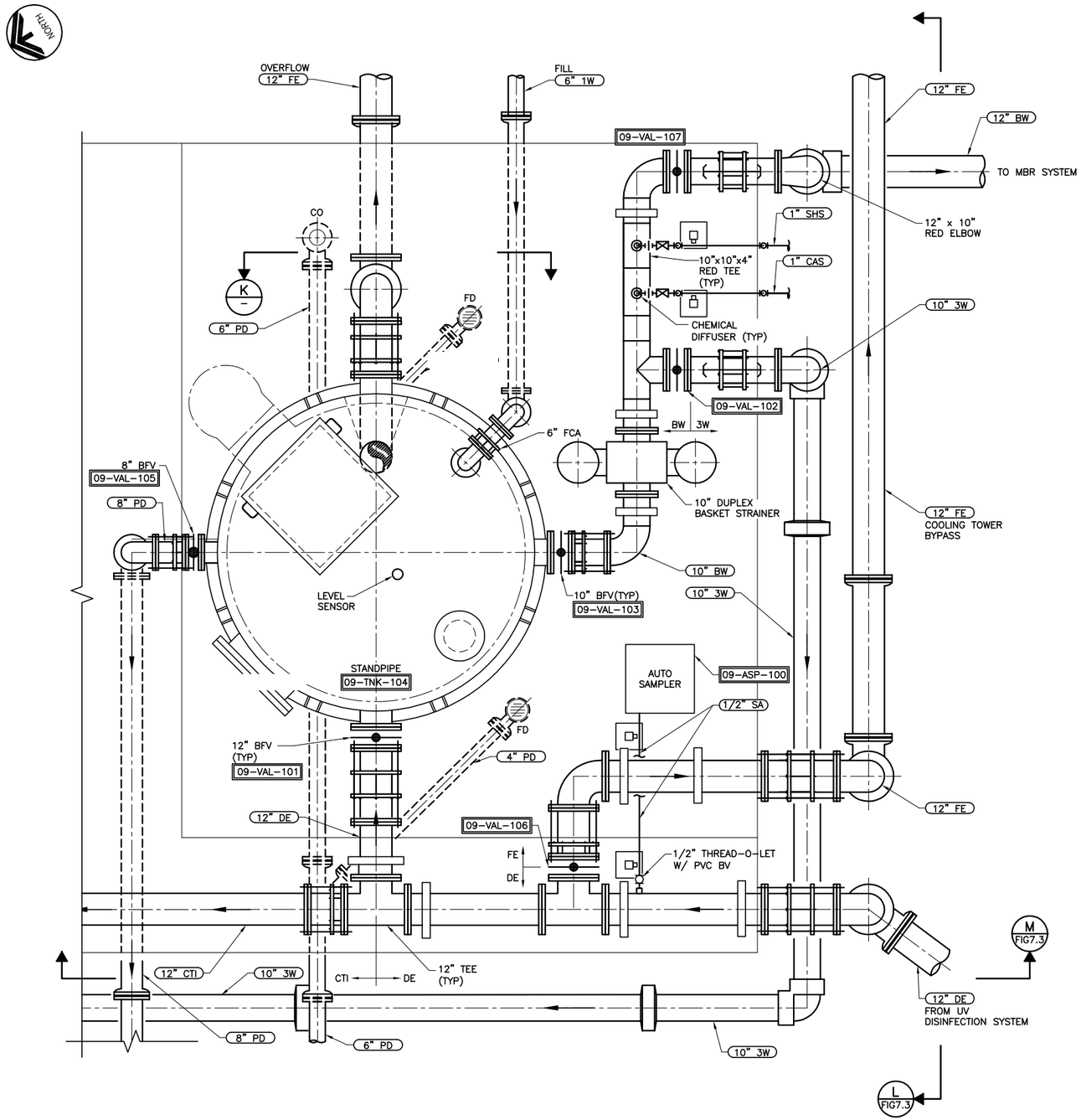

J PLAN – STANDPIPE

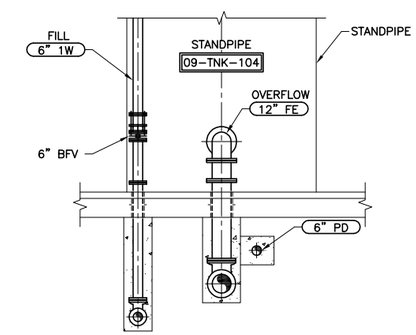

K SECTION

Figure No. 7.2

STANDPIPE PLAN VIEW AND SECTION
DEUEL VOCATIONAL INSTITUTION (DVI) NEW WWTP

CALIFORNIA DEPARTMENT OF CORRECTIONS AND REHABILITATION

carollo
Engineers...Working Wonders With Water ™

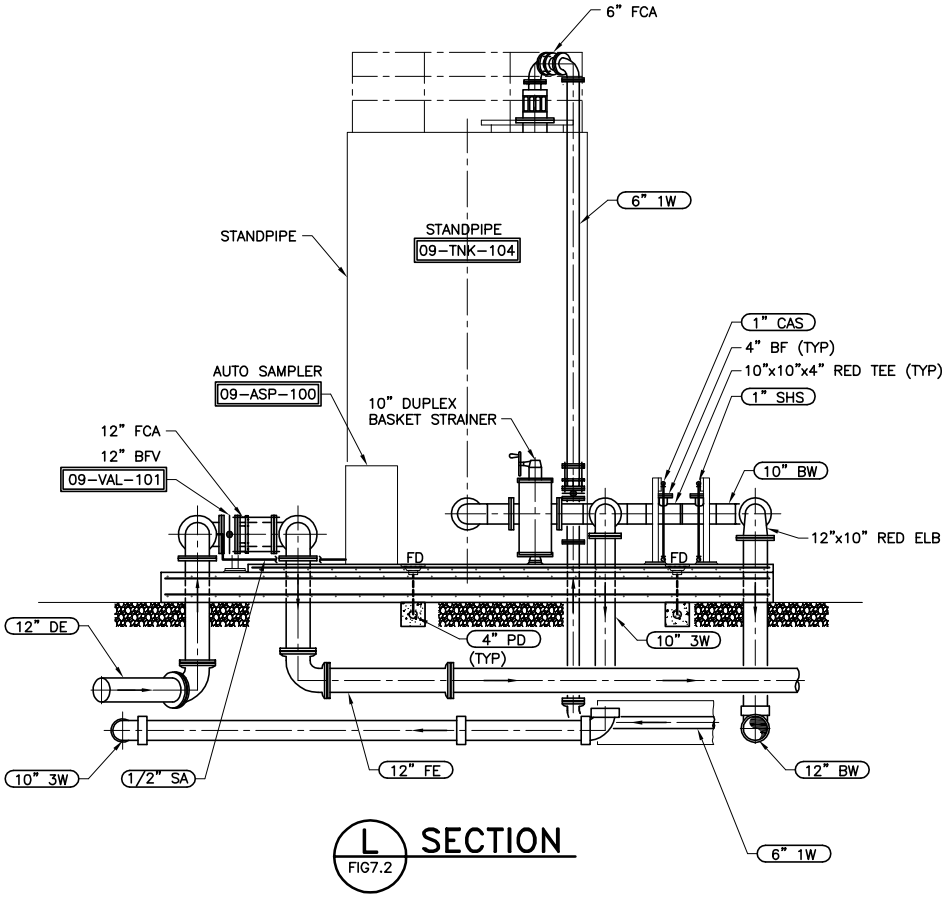

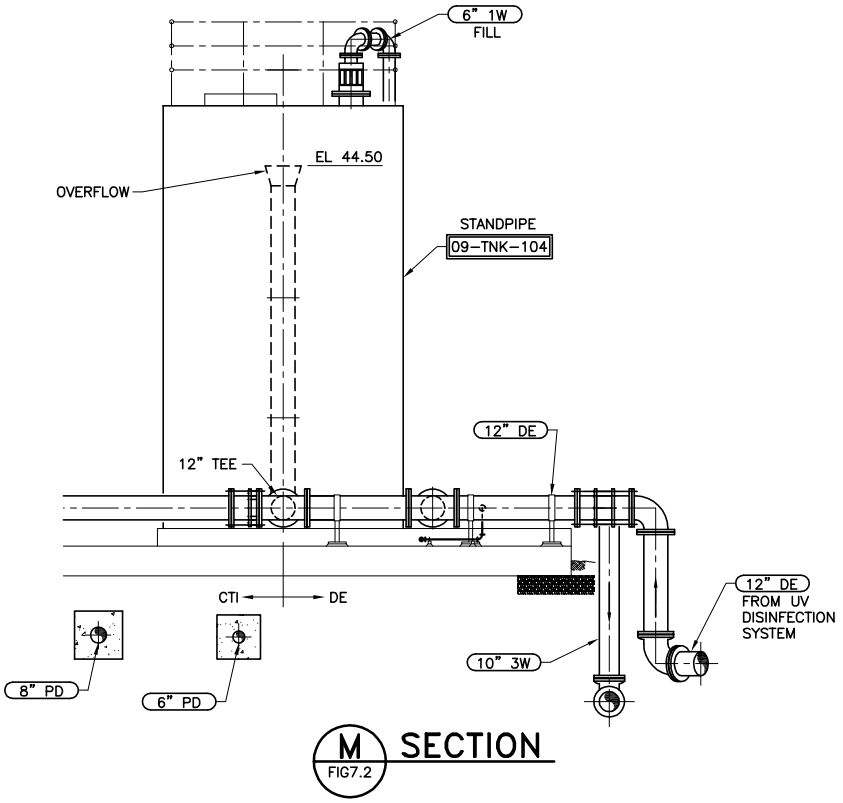

Figure No. 7.3

STANDPIPE SECTIONS

DEUEL VOCATIONAL INSTITUTION (DVI) NEW WWTP

CALIFORNIA DEPARTMENT OF CORRECTIONS AND REHABILITATION

Standpipe

PHOTO 7.1

California Department of Corrections
and Rehabilitation
Deuel Vocational Institution Wastewater Treatment Plant
Operations and Maintenance Manual

carollo
Engineers...Working Wonders With Water®

Cooling Towers

PHOTO 7.2

California Department of Corrections
and Rehabilitation
Deuel Vocational Institution Wastewater Treatment Plant
Operations and Maintenance Manual

carollo
Engineers...Working Wonders With Water®

The amount of heat transferred to the atmosphere by the cooling tower is always equal to the heat load imposed on the tower, whereas the temperature level at which the heat is transferred is determined by the thermal capability of the cooling tower and the entering air wet-bulb temperature. Since performance of the cooling tower is a function of how much water can be evaporated from the wet deck, a larger temperature drop will be seen on days with lower relative humidity. Rainy or foggy days will see less of a temperature drop because the air is already saturated (100 percent humidity) and is not able to absorb any evaporated water. If the water cannot evaporate off the wet deck, the water in the cooling tower will not be cooled. Relative humidity describes how much water the air can absorb; a day with low relative humidity (a warm sunny day or a cold clear day) will be able to absorb more evaporated water than a day with high relative humidity (rainy, humid, or foggy days).

The remaining effluent that has not been evaporated trickles down the wet deck where it is collected in the cooled water basin. Water flows from this basin through a Parshall Flume to an existing 14-inch final effluent (FE), which discharges into Deuel Drain.

The cooling towers are normally operated at all times; however, if they are inoperative or the temperature of the effluent upstream of the cooling towers is satisfactory, the bypass can be used. The bypass valve (08-VAL-104) is normally closed.

The cooling towers may be placed in out-of-service by manually closing valve 08-VAL-103, valve 08-VAL-106, or by closing each mechanical cooling tower's inlet valve (09-VAL-110, 09-VAL-210, 09-VAL-310), either manually, or from the operator interface system (OIS).

Three cooling towers are provided, each capable of accommodating half of peak flow (695 gallons per minute (gpm)). During normal peak operation, two units would operate (duty), and one unit would be dry (standby). One unit will routinely be switched out of service at all times to avoid algae growth. <u>It is imperative to cycle the out of service cooling tower weekly to prevent algae/biological growth in one of the units operating.</u>

By using three cooling towers (each sized for 50 percent flow), one unit will be out of service and dry, and the other two would satisfy the demand. This arrangement provides redundancy and cost-effective design.

There is significant variation in existing wastewater flows. With cooling towers, it can be difficult to achieve a 50 percent turndown ratio. By using one or two of the operating units, the owner will be able to get a wider variation in flow, maintaining a consistent discharge temperature and being more responsive to changes in flow, thus making the plant run better.

Water from the plant water storage tank flows to a combination of the three cooling towers where it falls through the cooling tower media. The water may be cooled solely by evaporative cooling or with the assistance of the two-speed fan. When the effluent is running at peak flow, two cooling towers should be on, with each fan running at high speed.

If ambient conditions are averse to evaporative cooling (i.e. humid weather), the fans should be run on high, regardless of flow, to maximize temperature reduction in final effluent. For flows less than 695 gpm (1 mgd), one cooling tower should be run; fan speed may be adjusted to provide more or less cooling while saving energy. Adjust flow, number of units in operation, and fan speed to obtain a final effluent discharge temperature within acceptable limits.

The cooling towers operate in a lead-lag-standby fashion based on the plant effluent flow and are operator adjustable through the OIS. A cooling tower is placed in service by opening the influent valve to the cooling tower.

The amount of cooling required is based on the temperature of the plant effluent and the temperature of the stream, and is operator adjustable through the supervisory control and data acquisition (SCADA) system.

7.4.3.1.1 *Cooling Tower Controls*

Each local control panel (LCP) for the cooling towers (09-CT-110, 09-CT-210 09-CT-310) contains a HAND-OFF-AUTO (H-O-A) selector switch, START pushbutton, STOP pushbutton (lockable), RESET pushbutton, HIGH-LOW speed selector switch, FAIL pilot light, and RUNNING pilot light. The LCP is located adjacent to the equipment. Photo 7.3 shows Cooling Tower No. 3 Local Control Panel.

In the LOCAL position, the fan can be started and stopped using the field START and STOP pushbuttons and HIGH- LOW fan speed selector switch.

In the AUTO position, the field HIGH-LOW selector switch and START pushbutton are disabled and the motor starts and stops through signals from the OIS/PLC system. START/STOP high-speed control, START/STOP low speed control, HAND-OFF-AUTO control, and Time Delay Off Timer (TDOFF) are provided through the OIS system.

Table 7.3 shows the typical cooling tower setpoints and describes their purpose. Table 7.4 gives a starting point for adjusting fan speed and operation.

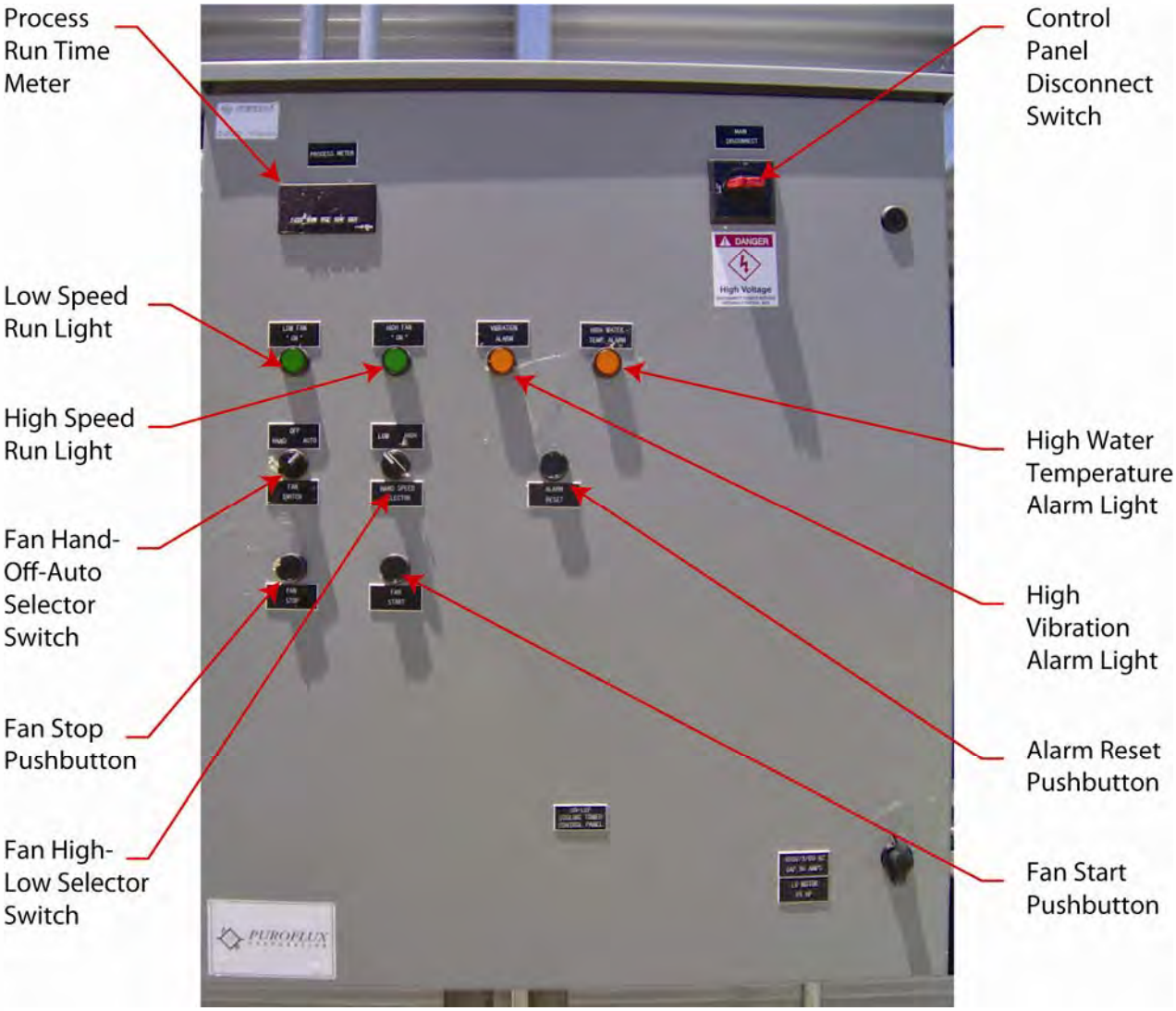

Cooling Tower No. 3 Local Control Panel

PHOTO 7.3

Table 7.3	**Typical Cooling Tower Setpoints DVI New Wastewater Treatment Plant California Department of Corrections and Rehabilitation**	
Setpoints	**Duration/ Level**	**Purpose**
Final Effluent Temperature	Within 4°F of upstream (R1A) water temperature	Prevents excessive downstream temperature rise of stream due to discharge of final effluent.
Time Delay Off Timer	1 minute	Time interval between cooling tower fan run cycles. Prevents motor from excessive wear and overheating.
Fan Shutoff Delay Timer	20 minutes	Aids on drying out cooling tower after it is shut off. Timer is adjustable 0 to 60 minutes.

Table 7.4	**Cooling Tower Fan and Flow Setpoints DVI New Wastewater Treatment Plant California Department of Corrections and Rehabilitation**			
Weather condition	**Flow (gpm/mgd)**	**No of units in operation**	**Fan speed**	**Notes**
Normal	<700/1.0	1	Low or high	
Normal	700/1.0 < Flow ≤ 1400/2.0	2	Low or high	
Normal	>2	3	Low or high	
Rainy, foggy, humid	≤ 1400/2.0	2	High	The unit will only be able to cool the water to within 5°F of the ambient wet bulb temperature.
Rainy, foggy, humid	≥1400/2.0	3	High	The unit will only be able to cool the water to within 5°F of the ambient wet bulb temperature.

7.5 NORMAL OPERATION PROCEDURES

This section describes operation of the headworks after the system has been started and is ready for normal operation. Startup/Shutdown procedures are outlined in a preceding chapter of this manual. In addition to the information presented, the equipment manufacturer's operations and maintenance (O&M) manual should be consulted for normal operating procedures and maintenance schedules.

7.5.1 Effluent Sampler

1. Daily, check operation of the effluent sampler and verify the unit is drawing samples as programmed.
2. Clean sample chamber weekly.

7.5.2 Standpipe

1. Daily, check the water level at the OIS.
2. Daily, ensure the valves are in the correct position that the flow is properly routed.

7.5.3 Effluent Cooling System

1. Daily, check each tower for signs of algae or biological growth. Shut down unit and allow unit to dry as soon as biological growth is evident.
2. Daily, inspect general condition of tower and check unit for unusual noise or vibration.
3. Daily, check air inlet louvers.
4. Daily, clean chamber inlet strainer.
5. Daily, clean cold water basin.
6. Daily, check condition of belt and tension.
7. Quarterly, remove dirt or debris from cold and hot water basins/spray nozzles.
8. Quarterly, check and adjust water level in cold and hot water basins.
9. Quarterly, clean and flush hot water basin with clean water.
10. Quarterly, readjust tension of belt.
11. Quarterly, lubricate fan shaft bearings (quarterly or after 2000 hours of operation).
12. Quarterly, lubricate motor base adjusting screw.
13. Quarterly, check fan for rotation without obstruction.
14. Quarterly, check motor voltage and current.
15. Quarterly, clean fan motor exterior to ensure proper motor cooling.

16. Quarterly, drain basins and piping, clean, and flush with cold water to remove accumulated sediment.
17. Annually, check drive alignment to ensure maximum belt life.
18. Annually, inspect tower finish.

7.5.4 Parshall Flume

1. Check the effluent flow at the OIS.
2. Ensure that no debris has accumulated in the flume.

7.6 EMERGENCY OPERATION PROCEDURES

7.6.1 Power Outage

1. In the event of a power outage, after an adjustable time delay, the emergency generator will start. Once power to cooling towers has been reestablished, verify that the equipment has started properly.
2. After utility power has been restored and the plant is switched from standby to utility power, the equipment will once again restart if in remote-automatic mode. Verify equipment has started properly.
3. Equipment in local or remote-manual mode will require manual restart.

7.6.2 Equipment Malfunctions

1. Motors or pumps with excessive vibration, unusual noise, overheating, or lubrication leakage should be shutdown. The unit should not be operated until the reason for these unusual observations has been corrected.
2. Motors that shutdown due to current imbalance or over current should be taken out of service immediately. Either of these types of failures indicates serious problems that should be investigated by an electrician prior to restarting the equipment. Shutdowns of this nature are common during electrical problems and a single attempt to restart is justified in this situation.
3. Pumps with excessive packing or seal leakage can be operated as long as the leaking water does not travel close to electrical or instrumentation equipment. Correct the leakage as soon as time permits.

7.7 STARTUP/SHUTDOWN PROCEDURES

The following is a brief description of the cooling tower startup and shutdown procedures. Refer to the equipment O&M manuals for specific information regarding lubrication and specific equipment checks.

7.7.1 Standpipe

7.7.1.1 Pre-Startup and Safety Check

1. Clean all debris, such as leaves and dirt, from inside the standpipe.
2. Fill standpipe with nonpotable water (2W) to ensure that there are no leaks from fittings.

7.7.1.2 Startup

1. Once standpipe has been tested, open effluent valves followed by the influent valves.

7.7.1.3 Shutdown

1. Turn off and lockout plant water pumps.
2. Close influent valve and route the water around standpipe.
3. If necessary, drain tank to plant drain or effluent pipe.

7.7.2 Cooling Tower

7.7.2.1 Pre-Startup and Safety Check

1. Clean all debris, such as leaves and dirt, from inside the tower, the air inlets, and the hot water basins.
2. Remove, clean and install the inlet strainer on the Cooling Towers.
3. Drain the cold-water basin (with basin strainers in place) and flush to remove accumulated dirt.
4. Remove the suction strainer, clean and reinstall.
5. With fans locked out, turn the fan(s) by hand to insure rotation without obstruction.
6. Bump the fan motor(s) and check for proper fan rotation.
7. At seasonal start-up, check and adjust the belt tension on the fan drive system. Note, during initial start-up, the belt tension may not require adjustment since the drive has been properly tensioned at the factory prior to shipment.
8. Lubricate the fan shaft bearings prior to seasonal start-up.
9. At start-up, when the cold-water basin is completely drained, fill the cold-water basin with fresh water to the overflow level.
10. Balance flow to the hot water basin(s) by adjusting the flow balancing valves. Multi-cell arrangements will require flow balancing between cells to obtain even water distribution.
11. Check the voltage and current of all three legs of the fan motor. The current should not exceed the nameplate rating. Note: Current should be measured during warm ambient conditions and with a heat load on the tower. After prolonged shutdowns, the

motor insulation should be checked with an insulation tester prior to restarting the motor.

7.7.2.2 Startup

1. Check the tower for any unusual noise or vibration.
2. Check the operating water level in the hot and cold-water basins and adjust balancing valves if installed.
3. Readjust the belt tension after 24 hours of operation.

7.7.2.3 Shutdown

1. Drain the cold-water basin and all piping that will be exposed to freezing temperatures.
2. Clean and flush the hot and cold-water basins with the basin strainers in place. Leave the cold-water basin drain open so rain will drain from the tower. Clean and flush the inlet strainer, if installed.
3. Clean the basin strainers and reinstall.
4. Cover the fan discharge opening to keep out dirt and debris.
5. Lubricate the fan shaft bearings and motor base adjusting screw.
6. Inspect the integrity of the corrosion protection system on the steel portion of the tower.
7. Inspect the internal walkway and replace anti-skid tape as necessary if deterioration or lifting is observed.
8. Secure the fan motor starting device in the off position.

7.7.3 Parshall Flume

7.7.3.1 Startup

The Parshall flume does not have any mechanical components and the unit operates when flow passes through it. When flow is passing through the flume, measure the height of flow manually. Refer to manufacturer's O&M manual for proper measurement location and flow conversion from depth measurement.

7.7.3.2 Shutdown

No specific actions needed.

7.8 ALARM CONDITIONS

This section describes alarm conditions that can occur during operation of the standpipe and cooling towers. The alarms provide for the operational surveillance of the facilities,

alerting operators to abnormal conditions. Alarm conditions are annunciated through the PLC/OIS and/or at individual LCPs/vendor control panels (VCPs).

7.8.1 Operational Strategies

When an alarm occurs, (1) the operator acknowledges the alarm at the LCP/VCP or PLC/OIS (2) examines the process condition on the OIS, LCP/VCP, or motor control center (MCC) and (3) takes remedial action, if possible. The operator then proceeds to the equipment originating the alarm. At the equipment that originated the alarm, the operator assesses the problem and determines the remedial actions required. If possible, and if it can be accomplished safely, the operator corrects the problem. If the problem cannot be corrected or accomplished safely with available equipment and immediate action is required to prevent an illegal discharge or protect equipment, the operator should notify the Supervisor and obtain the necessary assistance and equipment. The established plant safety procedures are to be observed during all operations, including operation under emergency conditions.

The following sections contain descriptions of each alarm, its indication, possible causes, and suggested response actions. The alarms listed here do not include any of the "intuitive" alarms created within the PLC. "Intuitive" alarms include those that signal the failure of a PLC resident command. This section details actual process and instrumentation condition alarms incorporated in the design of the plant. Any subsequent modifications should be noted and included in this section of the O&M manual. Any future alarms added should also be updated in this chapter.

7.8.1.1 Disinfected Effluent

7.8.1.1.1 *Composite Sampler Failure*

Indication: Composite Sampler fail alarm is indicated at the OIS. Sampler does not collect samples.

Action:

1. Acknowledge the alarm at the OIS.
2. Check sampler for clogging and jamming.
3. If unit is not operational, remove unit from service.
4. Grab disinfected effluent samples until composite sampler can be returned to service.

7.8.1.2 Standpipe

7.8.1.2.1 *High Level Trip Alarm*

Indication: High-level alarm is indicated at the OIS.

Action:

1. If alarm sounds, acknowledge and reset.
2. Inspect valving and make sure that the appropriate effluent valves are fully open.
3. Lockout plant water pumps and temporarily bypass standpipe until problem is resolved.

7.8.1.3 Cooling Tower

7.8.1.3.1 *Motor Overload Trip Alarm*

Indication: Overload alarm is indicated at the OIS. The cooling tower fan is shut down.

Action:

1. If alarm sounds, acknowledge and reset.
2. Start the standby-cooling tower.
3. Lockout and tagout the non-functioning cooling tower, inspect it, and make the necessary repairs.

7.8.1.3.2 *High Motor Temperature Alarm*

Indication: High temperature alarm is indicated at the OIS and the LCP. The cooling tower fan is shutoff and locked out.

Action:

1. If alarm sounds, acknowledge and reset.
2. Start the standby-cooling tower.
3. Inspect the cooling tower fan and motor and make repairs.

7.8.2 Troubleshooting Strategies

Operations staff must have a good understanding of the effluent cooling and disposal system, which includes effluent sampler, cooling towers, standpipe, associated equipment, and problem indicators. Table 7.5 presents potential operational problems and possible solutions for the cooling towers. It should be noted that these tables are not all-inclusive and may not correct the observed problem. With respect to mechanical and equipment problems, maintenance personnel should be notified immediately.

Additional information on specific problems may be found in equipment manufacturers' literature or text discussing wastewater treatment.

Table 7.5 Troubleshooting Guide For Cooling Towers DVI New Wastewater Treatment Plant California Department of Corrections and Rehabilitation			
Indicators/Observations	**Probable Cause**	**Check or Monitor**	**Solutions**
Cooling tower cools final effluent too much	• Fan speed to high • Too little flow across media	• Fan speed • Final effluent flow	• Reduce fan speed • Shut down one unit
Cooling tower does not cool final effluent sufficiently	• Relative humidity too high	• Ambient wet bulb and dry bulb temperatures	• Increase fan speed or increase number of units operating. • Increase flow during periods of lower ambient wet bulb temperature (e.g. at night)
	• Scale or biological fouling has decreased efficiency of media	• Condition of media	• Clean media
	• Fan speed too low	• Fan speed	• Increase fan speed

7.9 SAFETY

These safety instructions are provided as general guidelines only for operation of the headworks facilities. They are not intended to replace existing plant safety instructions and procedures.

If there is any doubt whatsoever about the safety of performing any tasks related to the operation and maintenance of the equipment described here, do not proceed until the necessary protection is provided.

7.9.1 Motors and Electrical Panels

When working with electricity, you must always assume that there is sufficient voltage and current present to cause injury. As little as 12 volts or .005 amperes can be dangerous.

Whenever working on motors or electrical panels that are “hot,” still connected to the power source, or assumed to be “hot,” do not use your bare hands to perform any internal maintenance. The use of certified rubber electrician’s gloves with protective leather gloves covering them is recommended. Voltages in treatment plants can run in excess of 4,000 volts; therefore, the rubber gloves should be certified for no less than 10,000 volts.

Prior to working on any of the above-mentioned units in place:

1. Open or place all control switches for the unit in the “**OFF**” position.

2. Open the main and control power circuit breakers and lock them open or remove the fuses. The open circuit breaker should be tagged to indicate the reason for its being locked open.
3. Open any foreign voltage circuits that may be present and lock and tag them.
4. Before starting work on the piece of equipment, check all exposed terminals or connections with a voltmeter before removing the rubber gloves.

7.9.2 Pumps

Before working on any of the pumps in the plant, open, lock-out, and tag the main and control power circuits as described above. No pump should be worked on internally while the control and main power circuits are still “hot” (see above). Double-check both suction and discharge valves to be positive they are closed. Relieve the internal pressure on the pump before the inspection cover is removed or dismantling of the pump begins. While working on the pump, keep the area as neat and orderly as possible. If sludge or any of the pump lubricant is spilled, it should be cleaned up immediately to prevent falls or other types of injuries or, in the case of the sludge, extended exposure to potentially harmful organisms.

7.9.3 Miscellaneous Items

When working on any piece of equipment, in place, keep the working area as orderly as possible. Keep safety barriers and rails in place when possible. When a safety barrier must be removed to permit access to a piece of equipment, caution should be used when outside of the barrier and be sure to replace the barrier when you are finished with the job.

7.9.3.1 Confined Spaces

Prior to entering a confined space, which has contained sewage, it should be thoroughly hosed down with clean water, any sludge pumped out or otherwise removed and properly ventilated. The operator should not enter it alone, but should be attached to a lifeline attended above by another operator. If adequate ventilation and fresh air circulation cannot be provided, self-contained breathing equipment should be used. If this is not possible, an oxygen meter and explosive gas meter should be lowered into the confined space. These two meters should be kept in the work area while workers are present. Should either meter register a hazardous condition, do not enter the area until proper ventilation has been provided. If either meter registers a hazardous condition after work has begun, all of the workers should leave the work area until proper ventilation can be provided.

7.9.3.2 Uncovered Water-Filled Structures

Operator should always use extreme caution when working near uncovered water-filled structures. Most tanks or basins in a treatment plant that fall into this category are provided with protective barriers, i.e., hand rails, etc., to prevent someone from accidentally falling into the tank. Openings are provided in the railing to give access to the tanks; these should

be used. Do not climb over or through the rails; this practice invites a fall. When the job is complete, reclose the opening in the barrier and make sure it is secured.

7.9.3.3 Routine Operations

No job is so important nor is speed or completion that critical that safety procedures should be ignored. Your carelessness can involve not only your own safety, but also that of others. Follow safety regulations, use prescribed safety procedures, and above all else, think before you act. In addition, the following precautions should be observed.

1. Wear safety boots or shoes with nonskid soles.
2. Watch your footing when working on wet surfaces.
3. Keep all hoses and tools picked up and properly stored.
4. Keep the guards on all machinery during operation.
5. Walk – DO NOT RUN – down the stairs; use the handrail.
6. Keep your hands and tools away from moving equipment.
7. Before starting, stopping, or operating any of the equipment in the treatment plant, think about what hazards are created by these actions and what needs to be done to prevent these hazards from having an effect on the safe operation of the equipment.

7.10 MAINTENANCE

The plant should update any current maintenance procedures with the appropriate detailed information from the manufacturer's O&M manuals. The procedures and maintenance schedule recommended by the manufacturer's publications must be followed to maintain complete warranty coverage of the plant equipment and ancillary equipment. After the warranty period, revisions to the maintenance schedules should be based on the operation and maintenance experience and approved by a designated manager. The revisions should address the frequency of mechanical inspection based on the amount of wear observed during the warranty period.

Deuel Vocational Institution

New Wastewater Treatment Plant

O&M Manual
Solids Handling System

TABLE OF CONTENTS

Page No.

Chapter 8 8-1

8.1 GENERAL PROCESS DESCRIPTION 8-1
8.2 DESIGN CRITERIA 8-2
8.3 COMPONENT/EQUIPMENT LISTINGS 8-4
8.4 COMPONENT DESCRIPTION 8-7
8.4.1 Sludge Storage Tank 8-8
8.4.2 Aeration System for the Sludge Storage Tank 8-13
8.4.3 Sludge Feed System 8-16
8.4.4 Gravity Belt Thickener/Belt Filter Press System 8-17
8.4.5 Belt Wash System 8-25
8.4.6 Polymer System 8-26
8.4.7 GBT/BFP Cake Collection System 8-29
8.4.8 Thickened Waste Activated Sludge Feed System 8-31
8.4.9 Solids Handing Facility Ventilation System 8-34
8.5 PROCESS CONTROL 8-36
8.5.1 Thickening Operation Mode 8-36
8.5.2 Dewatering Operation Mode 8-40
8.6 NORMAL OPERATION PROCEDURES 8-42
8.6.1 Sludge Storage Tank 8-42
8.6.2 Sludge Feed System 8-43
8.6.3 Polymer System 8-43
8.6.4 GBT/BFP System 8-44
8.6.5 Wash Water Booster Pumps 8-44
8.6.6 GBT/BFP Cake Collection System 8-45
8.6.7 TWAS Feed System 8-45
8.7 EMERGENCY OPERATION PROCEDURES 8-46
8.7.1 Power Outage 8-46
8.7.2 Sludge Feed Pump Inoperative 8-46
8.7.3 Polymer Dilution Unit Inoperative 8-46
8.7.4 GBT/BFP Shutdown 8-46
8.7.5 TWAS Pump Inoperative 8-46
8.7.6 Cake Collection System Inoperative 8-46
8.8 STARTUP/SHUTDOWN PROCEDURES 8-47
8.8.1 Sludge Storage Tank 8-47
8.8.2 Sludge Feed Pumps 8-47
8.8.3 Polymer System 8-48
8.8.4 GBT/BFP System 8-49
8.8.5 TWAS Feed System 8-50

8.9 ALARM CONDITIONS 8-51
8.9.1 Operational Strategies 8-51
8.9.2 Troubleshooting Strategies 8-56
8.10 SAFETY 8-64
8.10.1 Motors and Electrical Panels 8-64
8.10.2 Pumps 8-65
8.10.3 GBT/BFP System 8-65
8.10.4 Miscellaneous Items 8-66
8.11 MAINTENANCE 8-67

LIST OF TABLES

Table 8.1 Sludge Handling System Design Criteria 8-2
Table 8.2 Component/Equipment Listings 8-4
Table 8.3 Component/Equipment Listings 8-6
Table 8.4 Component/Equipment Listings 8-6
Table 8.5 Diffuser System for Sludge Storage Tank 8-13
Table 8.6 Troubleshooting Guide For GBT/BFP 8-56
Table 8.7 Troubleshooting Guide For PDU's 8-58
Table 8.8 Troubleshooting Guide For Progressive Cavity Pumps 8-60

LIST OF FIGURES

Figure 8.1 Aeration Tanks Bottom Plan View 8-9
Figure 8.2 Solids Handling Facility Plan View 8-18
Figure 8.3 Solids Handling Facility Sections 8-19
Figure 8.4 Solids Handling Facility HVAC 8-35

LIST OF PHOTOS

Photo 8.1 Recirculation and GBT/BFP Feed Pumps 8-12
Photo 8.2 GBT/BFP No. 1 8-20
Photo 8.3 GBT/BFP No. 1 Vendor Control Panel 8-24
Photo 8.4 Polymer Dilution Unit No. 1 8-28
Photo 8.5 Inclined Screw Conveyors 8-30
Photo 8.6 Truck Loading Area 8-32
Photo 8.7 TWAS Pump No. 2 8-33

SOLIDS HANDLING SYSTEM

8.1 GENERAL PROCESS DESCRIPTION

The purpose of the solids handling system is to stabilize and concentrate the solids generated in the secondary treatment processes at Deuel Vocational Institution (DVI) New Wastewater Treatment Plant (WWTP). During stabilization, the total volatile suspended solids (VSS) will be reduced resulting in decreased handling requirements. Concentrating (i.e., dewatering) the solids will allow for good separation of the solid and liquid phases. Additional reasons for thickening and dewatering sludge is to:

1. Lower sludge hauling costs based on weight and volume.
2. Ease the handling and transport of dewatered sludge by mechanical equipment.
3. Remove excess moisture and minimize odor.
4. Reduce leachate production of dewatered sludge prior to landfill disposal.

The solids handling system at the DVI New WWTP consists of a sludge storage tank (SST) and gravity belt thickener/belt filter press (GBT/BFP). Two sludge flows feed the SST: (1) waste activated sludge (WAS) from the membrane bioreactor (MBR) and (2) thickened waste activated sludge (TWAS) from the GBT/BFP. The SST is an aerated tank that facilitates with the decomposition of inert organic and inorganic compounds. The SST has three aerated zones; after the third aerated zone, the sludge flows over a weir wall to the sludge storage wet well. Two submersible pumps transfer the sludge from the wet well to the GBT/BFP unit.

Prior to the thickening and dewatering process, the sludge is conditioned using a dilute polymer solution. The diluted polymer solution is added to the sludge feed lines upstream of the GBT/BFP units to promote the flocculation of sludge particles.

The GBT/BFP may be operated in two modes: (1) GBT thickening mode and (2) GBT/BFP dewatering mode. In GBT mode, the WAS is thickened from two percent to five percent solids, referred to as TWAS. The TWAS is returned to the SST via two progressive cavity pumps for recuperative thickening. In GBT/BFP dewatering mode, the sludge is thickened and dewatered from 4 to 5 percent to 13 to 14 percent solids, referred to as biosolids cake. The GBT/BFP system is intended to capture 95 percent of the solids applied; thus, reducing the solids disposal volume by a factor of 7 to 10 times. The GBT/BFP mode of operation is based on a weekly schedule set by the operator. The thickened and dewatered solids produced are more amenable to composting, land application, or other disposal methods. The biosolids cake is conveyed from the GBT/BFP to the hauling bins, which is transported to a landfill.

This chapter describes the processes involved in the thickening and dewatering of solids generated at the DVI New WWTP. Additionally, the chapter describes the general operation and maintenance of equipment associated with the solids handling system facilities. For detailed operation and maintenance information on individual equipment items, refer to the associated manufacturer's operations and maintenance (O&M) manual.

8.2 DESIGN CRITERIA

The process design criteria for the sludge handling system is presented in Table 8.1.

Table 8.1 Sludge Handling System Design Criteria
DVI New Wastewater Treatment Plant
California Department of Corrections and Rehabilitation

Description	Units	Value
Sludge Storage Tank		
Type	Rectangular	
Number	--	1
Basin Length	feet	85
Basin Width	feet	20
Basin Depth	feet	18
Total Volume	gallons	236,000
Mixed Liquor Suspended Solids, ADMM	mg/L	14,200
Volatile Solids Reduction, ADMM	%	18
Recirculation/Transfer Pump		
Type	Submersible	
Number	--	1
Capacity, (Each)	gpm @ feet TDH	350 @ 35
Aeration System for Sludge Storage Tanks		
Type	Membrane Diffusers	
Diffuser Diameter	inch	9
Aeration Air Supply System/Blowers		
Type	Positive Displacement	
Drive Type	VFDs	
Number		2 + 1 Standby
Capacity, (Each)	scfm @ psig	1,093 @ 23
Maximum Air Required	scfm	2,186
GBT/BFP Feed Pumps		
Type	Submersible	
Drive Type (each)	VFDs	
Number	--	1 + 1 standby
Flow Capacity (each)	gpm @ feet TDH	160 @ 40

Table 8.1 Sludge Handling System Design Criteria DVI New Wastewater Treatment Plant California Department of Corrections and Rehabilitation		
Description	**Units**	**Value**
Polymer Storage Tote		
Capacity (Each)	gallon	55
Polymer Dilution Units		
Type	Inline Liquid Polymer System	
Number	--	1 + 1 standby
Metering Pump Type		Diaphram
Polymer Type		Emulsion
Polymer Activity	%	30 - 50
Concentrated Polymer Flow	gpm	0 - 20
Gravity Belt Thickener/Belt Filter Press		
Type	Gravity Belt Thickener/Belt Filter Press	
Number	--	2
Hydraulic Feed Rate	gpm	200
GBT Belt Size	Meter	1
Max. Solids Feed Rate	Lbs/hour	1,000
GBT TSS Feed	%	4 to 5
GBT Thickened Solids	%	5 to 6
Cake Solids	%	13 to 14
GBT/BFP Wash Water Booster Pumps		
Type	Centrifugal pump	
Number		2
Capacity (each)	gpm @ feet TDH	70 @ 116
TWAS Feed Pumps		
Type	Progressive Cavity	
Number	--	2
Flow Capacity (each)	gpm @ feet TDH	50 @ 24
GBT/BFP Horizontal Sludge Conveyor		
Type	Horizontal Screw	
Number	--	1
Capacity	wet tons/hour	1
Screw Diameter	inches	14
GBT/BFP Inclined Sludge Conveyor		
Type	Inclined Screw	
Number	--	1

Table 8.1 Sludge Handling System Design Criteria DVI New Wastewater Treatment Plant California Department of Corrections and Rehabilitation		
Description	**Units**	**Value**
Capacity	wet tons/hour	1
Screw Diameter	inches	14
Solids Handling Exhaust Fan		
Type	FRP Base Mount Centrifugal	
Drive Type	Constant Speed	
Number	--	1
Capacity	cfm	10,000

8.3 COMPONENT/EQUIPMENT LISTINGS

The listing of the major components and equipment items, including the function and purpose of each, for the solids handling system are presented in Tables 8.2, 8.3, and 8.4.

Table 8.2 Component/Equipment Listings
DVI New Wastewater Treatment Plant
California Department of Corrections and Rehabilitation

Name	Tag No(s).	Qty.	Characteristics	Function/Purpose
Weir Gate	03-GAT-300	1	48-inch x 30-inch, Manually operated weir gate (Normally Closed)	Regulates flow to the SST
Slide Gate	03-GAT-301	1	24-inch x 24-inch, Manually operated slide gate	Controls the influent wastewater flow into SST
Slide Gates	03-GAT-302	1	24-inch x 24-inch, Manually operated slide gate	Separates the second and third aeration zone
Sluice Gates	03-GAT-303	1	24-inch x 24-inch, Manually operated sluice gate	Allows settled solid in SST to drain to the sludge storage-wet well
SST Foam Spray Solenoid Valve	03-SV-300	1	Solenoid valve	Controls water spray for foam control in the SST
Recirculation/ Transfer pumps	03-PMP-330	1	4.69 hp, Constant speed non-clog centrifugal submersible pump manufactured by ABS Pumps, Inc., 353 gpm @ 25.4 feet TDH	Transfers mixed liquor (ML) or drained solids to an operational process tank or membrane wet well

Table 8.2 Component/Equipment Listings DVI New Wastewater Treatment Plant California Department of Corrections and Rehabilitation				
Name	**Tag No(s).**	**Qty.**	**Characteristics**	**Function/Purpose**
Airflow Butterfly Valves	03-VAL-301 03-VAL-302 03-VAL-303 03-VAL-304	4	8-inch butterfly valves	Controls the delivery of aeration air to each aeration grid
GBT/BFP Sludge Feed Pumps	03-PMP-510 03-PMP-520	2	4.02 hp, Constant speed non-clog centrifugal submersible pumps manufactured by ABS Pumps, Inc., 165 gpm@ 42.8 feet TDH	Pumps WAS from the SST to the GBT/BFPs
Sluice Gate	03-GAT-402	1	24-inch x 24-inch, Manually operated sluice gate	Allows membrane wet well and GBT/BFP feed wells to be combined or separate compartments
GBT/BFP Sludge Feed Pump Discharge Valves	03-VAL-510 03-VAL-510	2	6-inch ball valve	Isolation of GBT/BFP feed pumps
Major Instruments				
Drop Leg Air Flowmeter	03-FI-301 03-FI-302 03-FI-303 03-FI-304	4	Pitot gauge with portable analog output scaled 0 to 3,000 scfm.	Measures airflow through each drop leg
Dissolved Oxygen Analyzer	03-AIT-301	1	0 to 20 mg/L	Measures dissolved oxygen levels in the aeration tanks
GBT/BFP Sludge Feed Pump High Pressure Switch's	03-PI-510 03-PI-510	2	Pressure Switch	Automatically turns pump off when high pressure occurs in the discharge line

Table 8.3	**Component/Equipment Listings DVI New Wastewater Treatment Plant California Department of Corrections and Rehabilitation**			
Name	**Tag No(s).**	**Qty.**	**Characteristics**	**Function/Purpose**
Aeration Control Valves	05-VAL-330	1	Motorized 8-inch butterfly valves	Controls volume of aeration air to SST
Aeration Blowers	05-BLO-310 05-BLO-320 05-BLO-330	3	60 hp, Rotary lobe positive displacement blowers with VFDs.	Provides air to the fine bubble diffusion system in the aeration tanks and SST
Major Instruments				
Air Flowmeters	05-FIT-330	1	Thermal mass meters, calibration range 0 to 4,000 scfm	Measures the total airflow to the SST

Table 8.4	**Component/Equipment Listings DVI New Wastewater Treatment Plant California Department of Corrections and Rehabilitation**			
Name	**Tag No(s).**	**Qty.**	**Characteristics**	**Function/Purpose**
GBT/BFP No. 1 and No. 2	10-BFP-121 10-BFP-221	2		Drives both belts of each GBT/BFP unit
Belt Tension Hydraulic Units for GBT/BFP	10-PSL-121 10-PSL-122	2		Maintains belt tensions and belt tracking
GBT/BFP Wash Water Booster Pumps	10-PMP-141 10-PMP-241	2	7.5 hp, 70 gpm @ 116 feet TDH, Horizontal Centrifugal pumps manufactured by Flowserve Corporation	Boosts the water pressure for belt washing
GBT/BFP Polymer Tote	10-PT-100	1	Tote	Emulsion polymer storage
Polymer Mixer	10-MIX-100	1	Shafted	Maintains consistent polymer feed
Polymer Feeder	10-FDR-110 10-FDR-120	2	Inline Liquid Polymer System manufactured by VeloDyne	

Table 8.4 Component/Equipment Listings DVI New Wastewater Treatment Plant California Department of Corrections and Rehabilitation				
Name	**Tag No(s).**	**Qty.**	**Characteristics**	**Function/Purpose**
TWAS Pumps	10-PMP-115 10-PMP-215	2	7.5 hp, Progressive cavity pumps manufactured by Moyno Inc., 50 gpm @ 24 feet TDH	
TWAS Pump High Pressure Switch's	10-PSH-115 10-PSH-215	2	Pressure Switch	Automatically turns pump off when high pressure occurs in the discharge line
GBT/BFP Horizontal Sludge Conveyor	10-CON-131	1	7.5 hp, 14-inch Screw Conveyor manufactured by Waste-Tech	Conveys Cake to Inclined Conveyor
GBT/BFP Inclined Sludge Conveyor	10-CON-132	1	10 hp, 14-inch Screw Conveyor manufactured by Waste-Tech	Conveys Cake to Storage Bin
Solids Handling Exhaust Fan	10-EF-001	1	10,000 cfm, FRP Base Mount Centrifugal Fan	Removes air from solids handling building to prevent buildup of heat and odor
Major Instruments				
GBT/BFP Sludge Feed Pump Flowmeters	10-FIT-100 10-FIT-200	2	Magnetic meter, 0 to 500 gpm	Measures the flow of sludge to each GBT/BFP
TWAS Hopper Level Senor	10-LIT-115 10-LIT-215	2	Level Sensor	Senses TWAS Hopper 1-2 Levels

8.4 COMPONENT DESCRIPTION

The major components of the sludge handling system described in this chapter include the following structures and equipment:

1. Sludge Storage Tank.
2. Sludge Feed System.
3. Polymer System.
4. GBT/BFP System.
5. Belt Wash System.

6. Sludge Collection System.

7. Thickened Waste Activated Sludge Feed System.

8.4.1 Sludge Storage Tank

The solids handling system at the DVI New WWTP has one SST sized at 236,000 gallons. The SST may be converted to an aeration tank if one of the aeration tanks is out of service or if expansion of the treatment plant is needed in the future. If the SST were converted to an aeration tank, the third weir gate (03-GAT-300) located in the splitter box would be opened. Additionally, the sluice gate (03-GAT-301) located on the influent line from the splitter box to the SST would be opened. The operators would be able to manually close the sluice gate (03-GAT-301) when draining the SST or performing maintenance on the influent splitter box. Figure 8.1 illustrates the bottom plan for SST, including the associated equipment and piping.

The structural design of SST is the same as the aeration tanks; the SST is divided into three zones by baffle walls. Two sludge flows enter the first zone of the SST: (1) WAS from the MBR and (2) TWAS from the GBT/BFP. The WAS and TWAS flows enter the first zone of SST via a six-inch and eight-inch line, respectively. After the first zone, the sludge flows over a baffle wall to the second zone. A baffle wall containing a sluice gate (03-GAT-302) separates the second and third zones; however, the sluice gate will remain closed. All three zones are aerobic and contain fine bubble membrane diffusers. The diffusers serve to provide an aerobic environment needed by the microorganisms, as well as sufficient mixing. In each zone, varying levels of aeration are provided based on the estimated oxygen requirements to facilitate further solids reduction. After the final aerated zone, the sludge flows over a weir wall to the sludge storage wet well.

One dissolved oxygen (DO) analyzer (03-AIT-301) is installed in the SST to provide continuous DO measurements. The DO analyzers have been installed to provide the operator with a better understanding of the oxygen utilization as flow progresses through the SST.

8.4.1.1 <u>Baffle Wall</u>

A 12-inch open square penetration is located at the bottom of the baffle walls in the SST to allow draining of settled solids to a single location from each tank. Additionally, the baffle wall between the second anoxic zone and aerobic zone contains a manually operated sluice gate at the bottom (03-GAT-302 for SST). The sluice gates are operated manually (open/close) by use of manual crank operators.

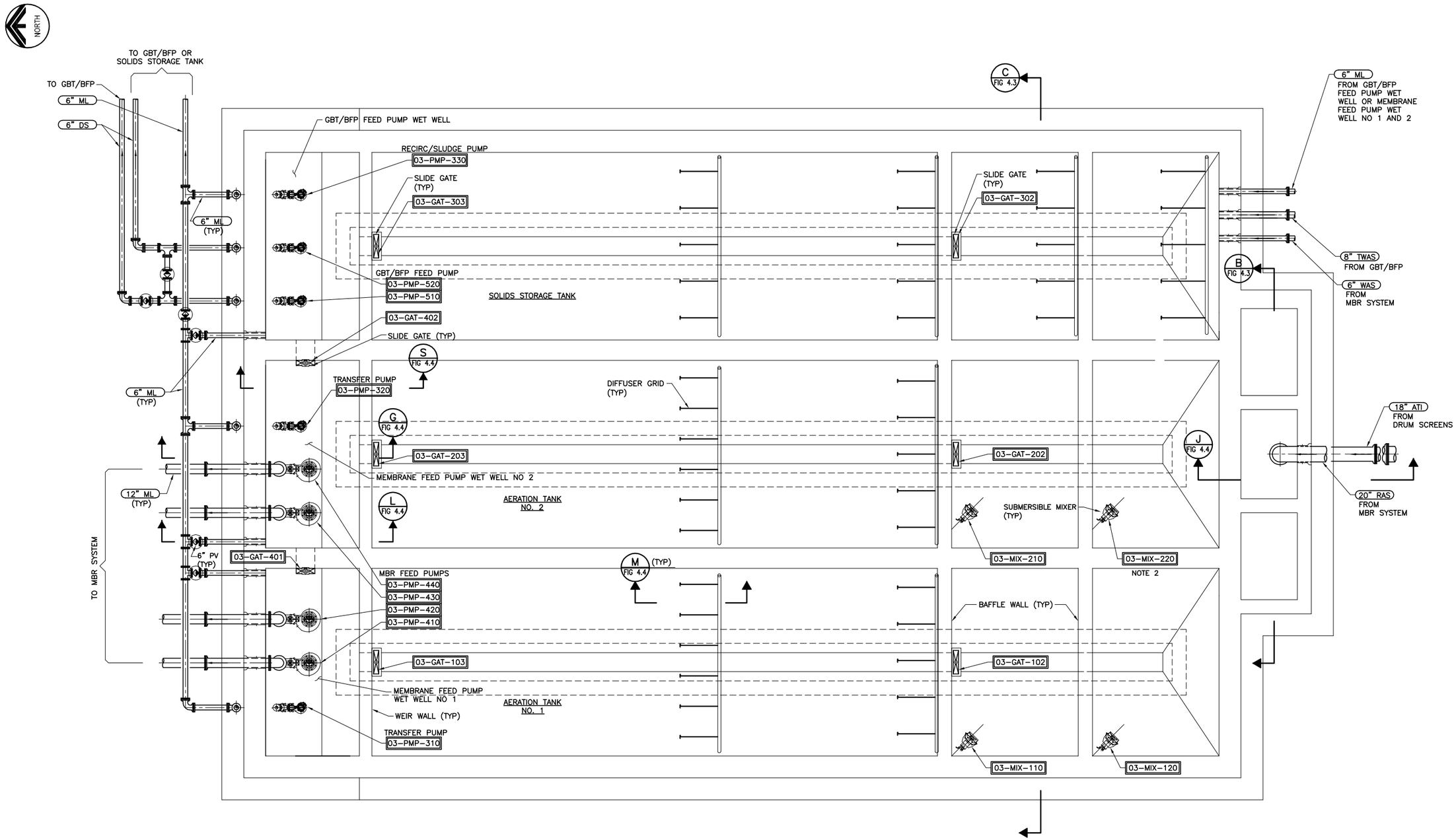

A PLAN – AERATION TANKS–BOTTOM

Figure No. 8.1

AERATION TANKS BOTTOM PLAN VIEW
DEUEL VOCATIONAL INSTITUTION (DVI) NEW WWTP

CALIFORNIA DEPARTMENT OF CORRECTIONS AND REHABILITATION

carollo
Engineers...Working Wonders With Water ™

8.4.1.2 Foam Control System

Spray nozzles are located along the perimeter walls above the water surface of the SST to suppress foam commonly associated with the aeration process. Under normal conditions, foam will tend to accumulate next to the walls. If *Nocardia* has developed, or if the plant experiences a large volume of surfactants entering the plant, the foam will spread across the surface of the tank and begin to build up. The spray nozzles can help knock down the foam and keep it in solution in the aeration tank. If there are no foaming problems, the sprayers may be turned off.

The foam spray nozzles are supplied with 3W through a four-inch pipe and pressure reducing valve. The pressure-reducing valve should be set at approximately 20 pounds per square inch (psi) to ensure proper operation of the nozzles. Downstream of the pressure-reducing valve, the flow splits to each tank through three-inch pipes and a solenoid control valve. The system is designed to (1) alternate spray cycles between the aeration tanks; (2) help minimize the use of 3W in the plant; and (3) reduce the volume of recycle flows.

The individual spray nozzles cannot be isolated for maintenance; rather, the nozzles are designed to be cleaned by flipping the counterweight up and allowing a stream discharge to remove any accumulated sediments. The configuration of the walkways on the SST allow the nozzles to be reached easily with a hook over the handrail. The nozzles should be purged periodically to maintain proper operation.

8.4.1.2.1 *Foam Control Sprayers Controls*

The foam control sprayers are turned on and off using the solenoid valve that is controlled from the supervisory control and data acquisition (SCADA) system. The foam control sprayers are only manually controlled from the operator interface system (OIS) by selecting OPEN or CLOSE. The operator may choose the duration to spray a single tank. Experience has indicated that ten minutes of spray in a 30-minute interval is sufficient for foam abatement. The OIS displays solenoid valve output signal.

8.4.1.3 SST Drainage

The construction of the SST creates a drainage system that lends to easily draining the tanks for maintenance and repair. The entire length of each aeration tank floor is sloped from the east and the west towards a one-foot wide, one-foot deep central trench. This longitudinal drain is sloped over the entire length of the tank towards the membrane wet well. Additionally, the bottoms of the baffle walls were designed with 12-inch open square penetrations to allow settled solids for the overall tank to drain to the sludge storage wet well. Likewise, the bottom of the weir wall to the sludge storage wet well is designed with a manually operated sluice gate (03-GAT-303), which is opened when draining the tanks.

Drained solids in the sludge storage wet well maybe transferred to an operational process tank via a recirculation/transfer pump (03-PMP-330) located in the sludge storage wet well.

When draining a process tank or membrane wet well for maintenance or repair, the recirculation/transfer pump may be used to transfer ML or drained solids to an operational process tank or membrane wet well. The piping of the transfer pump is designed to transfer the ML or drained solids to either the membrane wet well, aeration tank, or SST by manually adjusting the valves on the discharge header of the pump.

Normally, the recirculation/transfer pump (03-PMP-330) will be used to pump the solids in the sludge storage wet well to the inlet of the SST; thus, preventing the wet well from becoming anaerobic. A photo of the Recirculation Pump is shown in Photo 8.1.

8.4.1.3.1 *Recirculation/Sludge Pump Controls*

The recirculation/transfer pump (03-PMP-330) can be controlled by the programmable logic controller (PLC), through the SCADA system, or locally using START/LOCKOUT/STOP/RESET pushbuttons and LOCAL-OFF-REMOTE (L-O-R) selector switch at Motor Control Center-P1 (MCC-P1), which is located in the Blower/Electrical Building. The operational status and alarms of the recirculation/transfer pump is displayed at the SCADA system.

1. With the L-O-R selector switch at MCC-P1 in the **LOCAL** position, the recirculation/transfer pump is controlled manually by the operator using the **START/STOP** pushbuttons.
2. With the L-O-R selector switch at MCC-P1 in the **OFF** position, the recirculation/transfer pump is prohibited from running.
3. With the L-O-R selector switch at MCC-P1 in the **REMOTE** position, the recirculation/transfer pump is controlled through the PLC:
    a. With the HAND-OFF-AUTO selector switch at the pop-up window in the **HAND** position, the recirculation/transfer pump is controlled manually by the operator using the **START/STOP** selector.
    b. With the HAND-OFF-AUTO selector switch at the pop-up window in the **OFF** position, the recirculation/transfer is prohibited from running.
    c. With the HAND-OFF-AUTO selector switch at the pop-up window in the **AUTO** position, the recirculation/transfer pump is controlled by the PLC.

Normal operation for the recirculation/transfer pump is REMOTE-AUTO control mode. In REMOTE-AUTO control mode, the operation of the recirculation/transfer pumps is controlled by a pre-set timer for START/STOP.

Recirculation and GBT/BFP Feed Pumps

PHOTO 8.1

California Department of Corrections
and Rehabilitation
Deuel Vocational Institution Wastewater Treatment Plant
Operations and Maintenance Manual

carollo
Engineers...Working Wonders With Water®

8.4.2 Aeration System for the Sludge Storage Tank

The air system for the SST consists of aeration air distributed throughout the SST to provide the oxygen required for the biological process and prevention of solids settling. As mentioned before, different levels of aeration have been provided in the different zones based on the flow path and estimated oxygen requirement.

8.4.2.1 Aerobic Zones

The aerobic zones of the sludge storage tank include fine bubble membrane disc diffusers. Up to 766 standard cubic feet per minute (scfm) of total aeration air is provided to the aerobic zones of the sludge storage tank from one header using two positive displacement blowers, with a third serving as a standby blower.

8.4.2.2 Diffuser System for Sludge Storage Tank

The air diffusion devices utilized at the DVI New WWTP are nine-inch circular membrane fine bubble diffusers. The large number of small bubbles produced by fine-bubble diffusers increases the surface area between air and the ML, thereby providing high oxygen transfer efficiency. The fine bubble diffusers are distributed across the tank floor along PVC pipe laterals. Each lateral is connected to a manifold and drop leg. One drop leg, manifold, and connected laterals and diffusers are termed an aeration grid. There are a total of four aeration grids in the SST; Zones 1 and 2 contain one aeration grid each and Zone 3 contains two aeration grids. Each aeration grid in the SST has different diffuser densities and overall dimensions, designed to deliver air at a rate complimentary to the dissolved oxygen uptake. Table 8.5 shows the aeration zone, aeration grid, and corresponding number of diffusers with minimum and maximum airflows.

Table 8.5 Diffuser System for Sludge Storage Tank
DVI New Wastewater Treatment Plant
California Department of Corrections and Rehabilitation

Zone	Aeration Grid	Diffusers (No.)	Minimum Airflow (scfm)	Maximum Airflow (scfm)
1	1	80	45	119
2	2	80	45	119
3	3	152	77	203
3	4	231	124	325

Three positive displacement blowers (05-BLO-310, 05-BLO-320, and 05-BLO-330) supply air for the aeration system of Aeration Tank 1, Aeration Tank 2, and the SST. Air is discharged into a single 12-inch header, which then distributes air to two 8-inch headers for the Aeration Tanks and one 8-inch header for the SST. The 8-inch headers originate from the main 12-inch aeration air header from the aeration blowers. The headers travel

underground to the east side of the SST and run along the east face of the tank. The headers run a short vertical distance on the exterior wall of the SST and penetrate the east wall of the tank. Once entering the tank, the headers run suspended along the east wall of the SST.

Each eight-inch header is equipped with a two-inch condensate pipe and valve. The condensate pipe connects to the aeration headers at their lowest elevation and before entering the structure. For accessibility, the condensate pipe and valve run on top of the east wall of the SST. When the condensate valve is opened, it will remove the moisture that has accumulated in the header. Moisture can accumulate from condensation or seepage from the air tank if the aeration blowers shutdown. Open the condensate valves weekly to ensure liquid in the aeration header is not a problem. If air to an aeration tank is shutdown for more than an hour, bring the aeration grids back online slowly to ensure diffusers are not damaged. Also, open the condensate valves before restarting the aeration blowers. The most common way to damage an aeration grid is, if air is shutdown and condensate is in the system, when the air returns water is forced through the diffusers and the buildup in pressure causes the diffusers to rupture.

If the SST is to be taken out of service, continue the aeration until the tank is drained to an elevation just above the diffusers. Operation of the diffuser membranes without liquid coverage can cause damage, leading to premature failure. After the SST is drained, the diffuser membranes should be rinsed off while debris in the tank is hosed to the drain trench. Hose down the SST walls and diffuser membranes before the tank dries.

If the SST is to be kept out of service, fill the tank with 10 feet of water to protect the diffuser membranes from dropping objects, UV light, and temperature fluctuations. Fill the tank slowly with hoses laid along the sidewall of the tanks and the foam control sprays so that a large free fall of water will not damage the aeration laterals or diffuser membranes.

Caution should be exercised when draining the SST with air still going through the diffusers. As the level in the tank lowers, there will be increased airflow through the diffusers due to lessened head in the tank. The operator will need to throttle the air gird isolation valves (please refer to Section 8.4.2.4 Air Flow Butterfly Valves) to lower the airflow to the grid and to maintain system pressure.

For specific care and maintenance instructions of the diffuser membranes, consult the manufacturer's O&M manual.

8.4.2.3 Air Flow Monitoring

Aeration air delivery to each grid through the drop leg is monitored by the averaging pitot tube mounted on the horizontal pipe segment of the drop leg located above the handrail. The pitot is an instrument that uses pressure to measure the airflow through a pipe. A portable airflow sensor may be plugged into the pitot tube assembly to manually measure the airflow rate. For the SST, the pitot tube and corresponding grid is has follows:

- Aeration Grid 1 (03-FI-301)
- Aeration Grid 2 (03-FI-302)
- Aeration Grid 3 (03-FI-303)
- Aeration Grid 4 (03-FI-304)

8.4.2.4 Air Flow Butterfly Valves

Downstream of the pitot tube is a manual butterfly valve, which controls the delivery of aeration air to each aeration grid. The butterfly valve is installed in the horizontal pipe segment of the drop leg located above the handrail. For the SST, the butterfly valve and corresponding aeration grid is has follows:

- Aeration Grid 1 (03-VAL-301)
- Aeration Grid 2 (03-VAL-302)
- Aeration Grid 3 (03-VAL-303)
- Aeration Grid 4 (03-VAL-304)

The butterfly valve is throttled as required to supply the airflow to meet the oxygen demand of each aeration grid or tank. To ensure the correct amount of airflow is being delivered to each aeration grid, the airflow rate may be measured by a portable airflow monitor (please refer to section 8.4.2.3 Air Flow Monitoring). Care must be exercised in balancing airflow between grids to meet process demands. Excessive throttling of any of the butterfly valves will limit the system capacity and increase the working pressure of the aeration header, and can cause an imbalance in airflow between tanks.

8.4.2.5 Dissolved Oxygen Monitors

One DO analyzer (03-AIT-301) is installed near the effluent weir to measure the DO in the SST. The DO analyzers provide continuous DO measurements; assisting the operators with a better understanding of the oxygen utilization as flow progresses through the plug flow tank. The aeration air should be distributed through the aeration grid drop legs and control valves in a manner so that at the daily average flow and load, the measurement at each DO analyzer is roughly equivalent. As the influent progresses through the daily variations in flow and load, the DO analyzer may read somewhat differently, depending on organic uptake. To ensure that adequate DO is being supplied, the DO can be controlled based on an average DO analyzer reading, or on minimum DO. As DO level in the tank drops due to increased oxygen demand, the volume of air supplied through the modulating butterfly valves increases. The opposite occurs during declining oxygen demand.

8.4.2.6 Air Flowmeters

Total airflow to the SST is measured by a thermal mass flowmeter (05-FIT-330). As mentioned earlier, the tank is served by an eight-inch air header originating from the

aeration blowers. The air flowmeters are thermal insertion type with platinum resistance temperature detectors manufactured by Fluid Components International (FCI). The flow rate as well the process temperature is displayed. The operating pressure range for the instrument varies from 0 to 250 psig. For additional information on the flowmeter, refer to the manufacturer's O&M manual.

8.4.2.7 Aeration Control Valves

An aeration control valve (05-VAL-330) controls the total airflow to the SST. The SST has one motorized eight-inch aeration control valve, which discharges into an eight-inch header that supplies air to the drop legs of the SST. Additionally, the aeration grids in each tank have manual butterfly valves to adjust the percentage of the total tank airflow that can be directed to each grid. Detailed information on the manual butterfly valves is presented in Section 8.4.2.4, Air Flow Butterfly Valves.

The airflow to the SST is controlled by the position of the aeration control valve, which is adjusted via the SCADA System. The aeration system controls for the Aeration Tanks also apply to the SST aeration system. For detailed information regarding the controls of the aeration system, please refer to Chapter 4, Section 4.4.4.7.1, Aeration System Controls.

8.4.2.8 Aeration System/Blowers Controls

The aeration air system supplies processed air to the aeration tanks and the SST. For detailed information regarding the operations and controls of the aeration air supply system for the SST, please refer to Chapter 4, Section 4.4.4.7.1, Aeration System Controls and Section 4.4.4.8, Aeration Blower Controls.

8.4.3 Sludge Feed System

8.4.3.1 Sludge Storage Wet Well

After the third aeration zone of the SST, the sludge flows over a weir wall to the sludge storage wet well; refer to Figure 8.1. The sludge storage wet well has a common wall with the membrane wet well. This common wall contains a sluice gate, which creates flexibility in the operation of the wet well. The sluice gate is operated manually (open/close) by use of manual crank operators.

8.4.3.2 Sludge Feed Pumps

Located in the sludge storage wet well are two 5 hp, submersible type feed pumps (03-PMP-510 and 03-PMP-520) used to feed sludge to the GBT/BFP units; refer to Figure 8.1 and Photo 8.1. Each pump has a dedicated variable frequency drive (VFD). The two 6-inch feed lines used to transport the sludge to the GBT/BFP units are designed so that either sludge feed pump may deliver sludge to either GBT/BFP unit by the opening and closing the appropriate valves. The sludge flows in GBT/BFP feed lines are measured by magnetic flowmeters (10-FIT-100 and 10-FIT-200).

8.4.3.2.1 *Sludge Feed Pump Controls*

Each GBT/BFP feed pump (03-PMP-510 and 03-PMP-520) has START/LOCKOUT/STOP/RESET pushbuttons and L-O-R selector switch at MCC-P1. Also located at the MCC-P1 are the VFD for each pump, which consists of a remote mode and manual speed potentiometer that can be used to locally adjust the speed of the pump.

1. With the L-O-R selector switch at MCC-P1 in the **LOCAL** position, the GBT/BFP feed pump is controlled manually by the operator using the **START/STOP** pushbuttons and **SPEED** potentiometer.
2. With the L-O-R selector switch at MCC-P1 in the **OFF** position, the GBT/BFP feed pump is prohibited from running.
3. With the L-O-R selector switch at MCC-P1 in the **REMOTE** position, the GBT/BFP feed pump is controlled through the PLC:
    a. With the HAND-OFF-AUTO selector switch at the pop-up window in the **HAND** position, the selected GBT/BFP feed pump is controlled manually by the operator using the **START**/**STOP** pushbuttons and entering a percent **SPEED**.
    b. With the HAND-OFF-AUTO selector switch at the pop-up window in the **OFF** position, the selected GBT/BFP feed pump is prohibited from running.
    c. With the HAND-OFF-AUTO selector switch at the pop-up window in the **AUTO** position, the selected GBT/BFP feed pump is controlled by the PLC.

Normal operation for the GBT/BFP feed pump is REMOTE-AUTO control mode. In REMOTE-AUTO control mode, GBT/BFP feed pump operation is started based on the start sequence from the GBT/BFP vendor control panel (VCP).

8.4.4 Gravity Belt Thickener/Belt Filter Press System

The GBT/BFP unit is a GBT mounted on top of a BFP. There are two GBT/BFP units (10-BFP-121 and BFP-221) located in the Solids Handling Facility as shown in Figure 8.2. Figure 8.3 shows sections of the Solids Handling Facility including associated equipment and piping. Photo 8.2 shows the various components of GBT/BFP No. 1. The GBT/BFP may be operated in two modes: (1) GBT thickening mode and (2) GBT/BFP dewatering mode. During the GBT thickening mode, sludge is fed to the gravity dewatering zone of the GBT/BFP unit where a majority of the free water is removed from the sludge by gravity drainage through the belt. This thickens the sludge from two percent to five percent solids, referred to as TWAS. TWAS is diverted from the gravity dewatering zone with a pneumatic or hydraulic diverter gate to the hopper of a progressive cavity pump that discharges the TWAS to the SST. During the GBT/BFP dewatering mode, sludge is applied to the gravity dewatering zone portion of the GBT/BFP unit. After the sludge undergoes thickening, the sludge falls to the wedge zone where the sludge is compressed. Following to the wedge

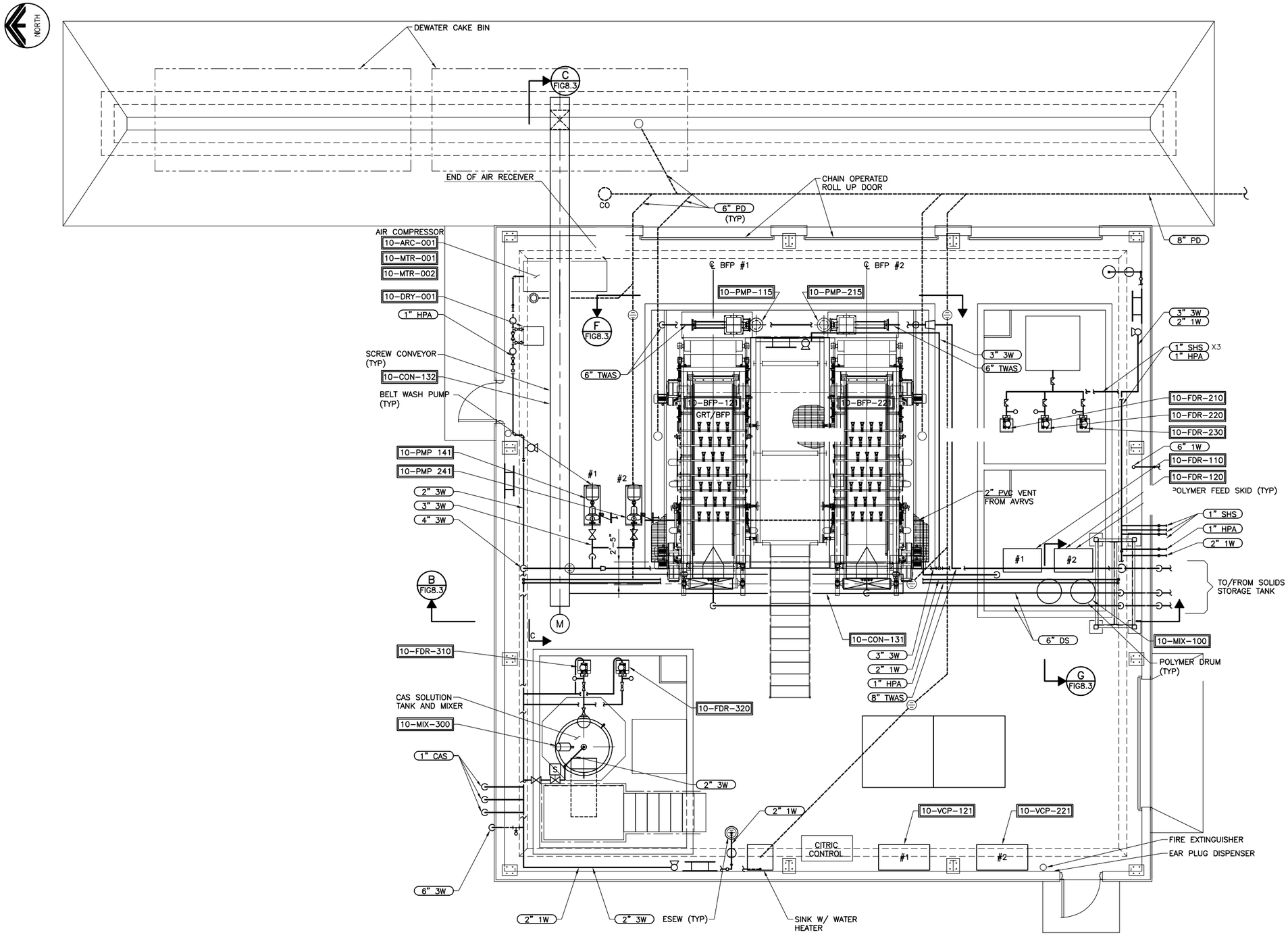

A PLAN – SOLIDS HANDLING FACILITY

Figure No. 8.2

SOLIDS HANDLING FACILITY PLAN VIEW
DEUEL VOCATIONAL INSTITUTION (DVI) NEW WWTP

CALIFORNIA DEPARTMENT OF CORRECTIONS AND REHABILITATION

carollo
Engineers...Working Wonders With Water ™

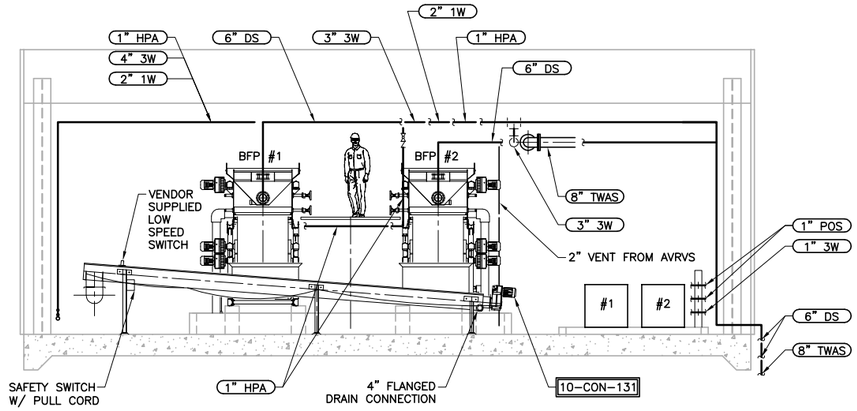

B SECTION
FIG8.2

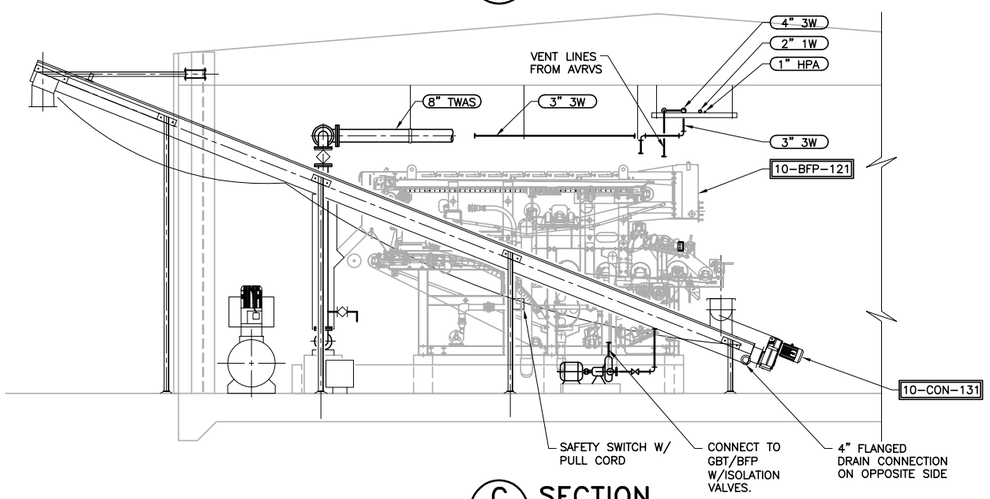

C SECTION
FIG8.2

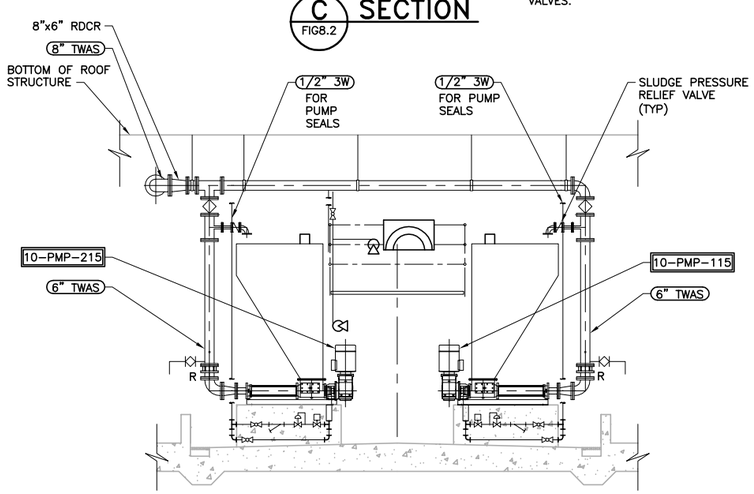

F SECTION
FIG8.2

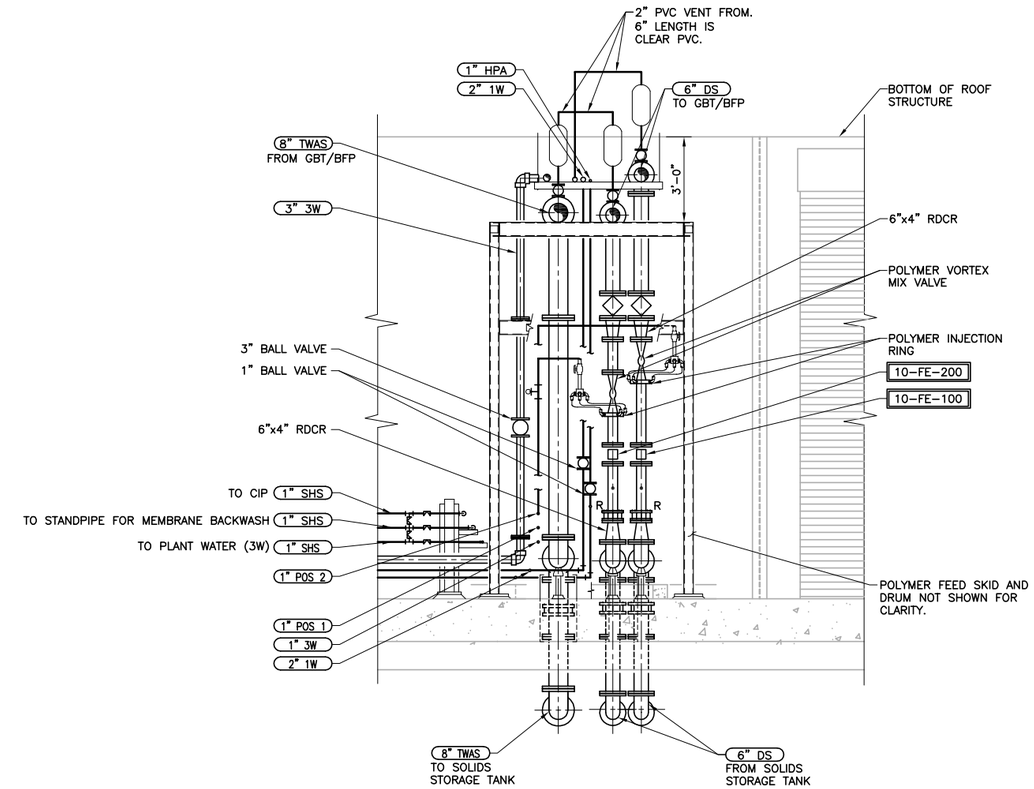

G SECTION
FIG8.3

Figure No. 8.3

SOLIDS HANDLING FACILITY SECTIONS
DEUEL VOCATIONAL INSTITUTION (DVI) NEW WWTP

CALIFORNIA DEPARTMENT OF CORRECTIONS AND REHABILITATION

carollo
Engineers...Working Wonders With Water ™

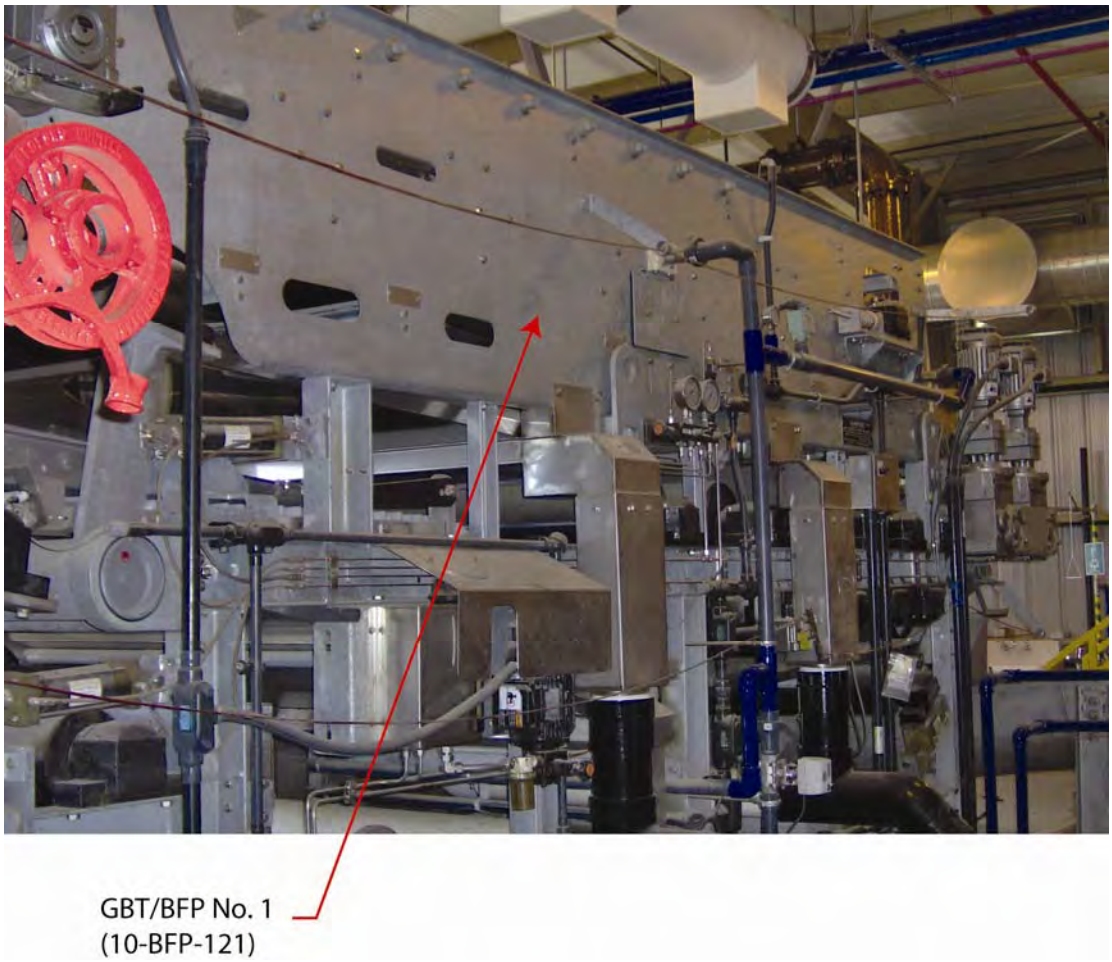

GBT/BFP No. 1

PHOTO 8.2

California Department of Corrections
and Rehabilitation
Deuel Vocational Institution Wastewater Treatment Plant
Operations and Maintenance Manual

carollo
Engineers...Working Wonders With Water®

zone, the sludge enters the high-pressure zone where the sludge is pressed between two porous belts that travel in a continuous cycle around a series of rollers. The squeezing and shearing forces release additional water from the sludge. Finally, dewatered sludge cake (i.e., biosolids cake) is released from the belts and transported via conveyors to the cake storage bin before truck loading. The GBT/BFP units drain water is returned to the influent wet well via the plant drain.

The following is a description of the different zones that comprise the GBT/BFP unit.

Gravity Dewatering Zone

The first zone the sludge enters is the gravity dewatering zone which is in the GBT portion of the GBT/BFP unit. The gravity dewatering zone consists of a belt that spans the length between the feed distribution chute and the discharge chute. Additionally, the gravity dewatering zone is equipped with a series of plows that separate the sludge into rows on the filter belt. This facilitates the drainage of water through the filter belt. The plows may be raised and lowered as needed by rotating handles that are at the end of each line of plows. As the solids are conveyed from one end of the dewatering zone to the other, the water content of the sludge decreases progressively.

Filter Belt, Rollers, and Belt Drive

As mentioned before, the gravity-dewatering zone is equipped with a belt, which is a one-meter wide belt woven of polyester wear resistant fiber. The belt is spliced together at the ends so that it forms a continuous loop. Pores that are formed by the weave allow free water to drain away from the sludge flocs. The belt rides on rollers, which must be lubricated with grease regularly. Each roller is equipped with a lubrication fitting. These are located so that grease can be applied while the GBT/BFP is in operation.

The belt tension is maintained by the belt tensioning system. The tensioning system uses hydraulically operated cylinders attached to the frame to maintain even tension across the width of the belt. If tension is not maintained evenly across the belt, the belt may track or shift out of alignment.

The filter belt is driven by a three-hp motor with a right angle, worm gear reducer. The motor speed is controlled by a VFD. The belt speed controller is located on the GBT/BFP control panel.

Discharge Handling Equipment

The discharge handling equipment includes the following items:

- Diverter gate
- Discharge Chute
- Thickened Sludge Hopper

The diverter gate scrapes the width of the belt at the discharge end of the gravity dewatering zone and shall guide the thickened sludge to the thickened sludge hopper. There are two thickened sludge hoppers, one for each GBT/BFP unit. Each hopper is equipped with two level sensing elements. The operator can select one or the other level element in the SCADA system. Each thickened sludge hopper feeds into the suction end of a thickened sludge pump.

Wedge Dewatering Zone

If the GBT/BFP is operating in dewatering mode, the sludge continues to the vertical wedge zone. This is a low-pressure section, where two belts begin to converge and compress the sludge. If the sludge is well drained from the gravity zone, there should be no extrusion of cake out of the wedge. After the wedge zone, the two belts with sludge cake in between wrap around the Dandy roller. The Dandy roller is the first pressure zone and releases most of the water left after the gravity zone. If sludge is extruding out of the belts at the Dandy roller, either the (1) polymer dose is not correct, (2) inadequate gravity drainage, or (3) belts are operating to slowly. The Dandy roller has internal scoops to channel the water away from the sludge.

High Pressure Zone

The second half of the dewatering mode occurs in the high-pressure zone. After the Dandy roller, the belts follow an S-shaped path around a series of rollers progressively decreasing in diameter. As the diameter decreases, the pressure and the shear action on sludge increase. The high-pressure zone has rollers with smaller diameters. These rollers provide higher pressure and shear on the sludge. The shear action on the sludge exposes the wet inner cake and expels free water. At the end of the high-pressure zone, the two belts split and discharge the biosolids cake to the cake conveyor.

After the belt split, doctor blades are provided to help release the cake from the belt. The system is operating correctly if the cake falls away from the belt before the doctor blades. The doctor blades require checking and cleaning several times a day to ensure good cake release and hair accumulation is not a problem. Clean the doctor blades with a schedule 80 PVC pipe or a piece of UHMW polyethylene sharpened to a point so it can clear the hair that accumulates on the leading edge of the blade. Well-adjusted doctor blades clean the belts before the belt wash box.

8.4.4.1 GBT Thickening Mode

When operating in thickening mode, the GBT/BFP units increase the solids content of the WAS before it is pumped to the SST for recuperative thickening. The thickening process increases the solids concentration; thus, increases the dewatering mode performance. The GBT portion of the GBT/BFP unit has a maximum feed rate of 500 gallons per minute (gpm) and solids throughput of 1,250 dry pounds per hour. Each GBT/BFP unit is sized to thicken the entire WAS flow under peak plant conditions.

8.4.4.1.1 *GBT Thickening Mode Controls*

Each GBT/BFP is controlled from the plant PLC/OIS. Only a local EMERGENCY STOP button is provided at each GBT/BFP unit to shut down the system in any operational mode.

The GBT/BFP units have REMOTE-MANUAL and REMOTE-AUTO capabilities. In REMOTE-MANUAL, each piece of the equipment is started by the operator in a predetermined start-up sequence. Interlocks require the operator to start the equipment in the same order as the automatic startup sequence. In REMOTE-AUTO, the GBT thickening mode start-up follows the GBT/BFP dewatering mode start-up sequence.

Each GBT Belt Drive Motor has a PLC-OFF-BYPASS selector switch at the local control panel (LCP) located in the Solids Handling Facility. A photo of the GBT/BFP No. 1 Vendor Control Panel is shown in Photo 8.3. In BYPASS, the unit starts and operates at the speed set by the VFD speed controller. The drive unit also has REMOTE-MANUAL and REMOTE-AUTO controls at the PLC/OIS. In REMOTE-MANUAL the drive motor starts and stops from the OIS, assuming the hydraulic unit is already operating as required by the equipment interlock. The speed of the drive is based on the value entered by the operator at the OIS.

The GBT drive has a maximum speed of 20 feet per minute (fpm). During normal operation, the belts should be operated between 10 and 15 fpm. In REMOTE-AUTO the drive starts automatically according to the start-up sequence. The operator still manually adjusts the belt drive speed.

There are a variety of alarms for the GBT portion of the GBT/BFP unit designed to protect the equipment and process.

8.4.4.2 GBT/BFP Dewatering Mode

The BFP increases the solids content of the sludge from the GBT by pressing the thickened sludge between two porous belts that travel in a continuous cycle around a series of rollers. The squeezing and shearing forces release additional water from the sludge. Finally, dewatered sludge cake is released from the belts and carried to the cake storage bin before truck loading.

8.4.4.2.1 *GBT/BFP Dewatering Mode Controls*

Each GBT/BFP is controlled from the plant PLC/OIS. Only a local EMERGENCY STOP button is provided at each BFP drive to shut down the system in any operational mode.

The GBT/BFPs have REMOTE-MANUAL and REMOTE-AUTO capabilities. In REMOTE-MANUAL, each piece of the equipment is started by the operator in a predetermined start-up sequence. Interlocks require the operator to start the equipment in the same order as the automatic startup sequence. In AUTO mode, the start-up of the GBT/BFP dewatering mode follows the GBT thickening mode start-up sequence.

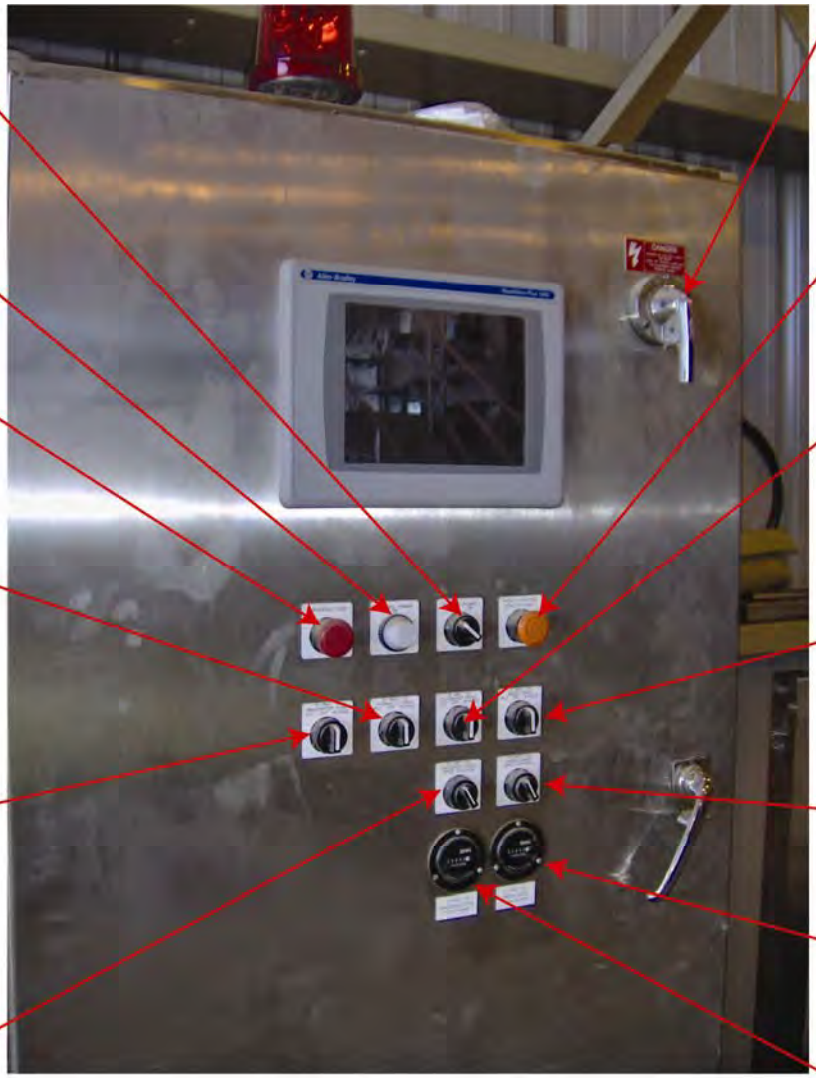

GBT/BFP No. 1 Vendor Control Panel

PHOTO 8.3

Each belt drive motor has a PLC-OFF-BYPASS selector switch at the LCP located in the Solids Handling Facility; refer to Photo 8.3. In BYPASS, the unit starts and operates at the speed set by the VFD speed controller. The drive unit also has REMOTE-MANUAL and REMOTE-AUTO controls at the PLC/OIS. In REMOTE-MANUAL the drive motor starts and stops from the OIS, assuming the hydraulic unit is already operating as required by the equipment interlock. The speed of the drive is based on the value entered by the operator at the OIS. The BFP drive has a maximum speed of 20 fpm. During normal operation, the belts should be operated between 6 and 10 fpm. Speeds higher than this will limit the time the cake is held in the pressure rollers and reduce cake solids. In REMOTE-AUTO, the drive starts automatically according to the startup sequence. The operator still manually adjusts the belt drive speed.

There are a variety of alarms for the BFP portion of the GBT/BFP unit designed to protect the equipment and process. Descriptions of these alarms are provided in the operation strategy section.

8.4.5 Belt Wash System

8.4.5.1 Belt Wash Water Sprayers

Both sludge and polymer will clog the porous belt if the belt washing system is not operating properly. A clogged belt will not drain away filtrate even if the polymer dose is set properly. Belt sprays mounted in the wash boxes keep the belts clean. The belt wash system typically operates at 80 to 100 psi. Nozzles inside the wash box spray directly onto the belt. Motorized belt wash solenoid valves for each press are always open when the GBT/BFP units are operating.

Tracks or streaks left on the belt after spray water cleaning indicates incomplete cleaning and that the nozzles may be clogged. Open the dump wheel to release pressure out of the wash bar and so the wire-cleaning blush can remove debris stuck in the nozzle tips. Do not leave the wash bar dump valve open for longer than a minute and do not open both wash bar dump valves at the same time. The belt wash system has a low-pressure switch, which will alarm and shutdown the GBT/BFP, if the belt wash pressure drops below the 60 psi set point for longer than 75 seconds.

8.4.5.2 Belt Wash Water Booster Pumps

To provide additional pressure, the 3W system used with the GBT/BFP system's two 7.5-hp, horizontal centrifugal type pumps (10-PMP-141 and 10-PMP-241) boost the plant 3W pressure up to 150 psi operating pressure. Each belt wash 3W booster pump is operated at constant speed and runs continuously as long as the GBT/BFP is in service.

8.4.5.2.1 *Belt Wash Booster Pump Controls*

Each belt wash water booster pump (10-PMP-141 and 10-PMP-241) has START/LOCKOUT/STOP/RESET pushbuttons and L-O-R selector switch at MCC-P4.

1. With the PLC-OFF-BYPASS selector switch at the GBT/BFP LCP in the **BYPASS** position, the booster pump is controlled manually by the operator using the **START/STOP** pushbuttons.
2. With the PLC-OFF-BYPASS selector switch at the GBT/BFP LCP in the **OFF** position, the booster pump is prohibited from running.
3. With the PLC-OFF-BYPASS selector switch at the GBT/BFP LCP in the **PLC** position, the booster pump is controlled through the PLC:
    a. With the HAND-OFF-AUTO selector switch at the pop-up window in the **HAND** postion, the selected booster pump is controlled manually by the operator using the **START/STOP** selector.
    b. With the HAND-OFF-AUTO selector switch at the pop-up window in the **OFF** position, the selected booster pump is prohibited from running.
    c. With the HAND-OFF-AUTO selector switch at the pop-up window in the **AUTO** position, the selected booster pump is controlled by the PLC.

Normal operation for the booster pumps is REMOTE-AUTO control mode. In REMOTE-AUTO control mode, booster pump operation is started based on the start sequence from the GBT/BFP VCP.

8.4.6 Polymer System

The polymer system prepares a diluted polymer solution from a concentrated emulsion polymer. The addition of a cationic polymer to the GBT/BFP feed sludge is required for thickening and dewatering process performance. Components of the polymer system include the bulk polymer storage tote, polymer dilution unit, and static mixer. The polymer system is located in the Solids Handling Facility.

Application of the polymer at the optimum dosage is critical in achieving satisfactory operation of the GBT/BFP units. If the polymer dosage is too low, solid-liquid separation will not occur. Alternatively, if the polymer dosage is too high, the solids may bind the belt of GBT/BFP unit; thus, reducing the efficiency of the thickening and dewatering process. Generally, the visual appearance of the sludge indicates whether polymer application is needed.

8.4.6.1 <u>Bulk Polymer Storage Tote</u>

The emulsion polymer is received as a “neat” solution in a bulk polymer storage tote (10-PT-100) that holds approximately 330 gallons (each). Since the emulsion polymer will separate when stored for long periods of time, the storage tote is supplied with a stainless steel, three-blade mixer (10-MIX-100) with an impeller rotation of 250 rpm or less. The mixer keeps the contents of the tote in suspension and thoroughly dispersed without

damaging the long polymer chains. For proper process control, it is essential that the neat polymer be homogeneous. Therefore, the mixer should be turned on prior to transferring the neat polymer to the Polymer Dilution Unit (PDU).

8.4.6.2 Polymer Dilution Unit

Polymers are long chained organic molecules. In neat solution, the chains are compressed due to the concentration of the solution. For polymers to serve their function and flocculate sludge particles, the chains must be opened and expanded. The function of a PDU is to accurately dilute and activate the neat polymer. The PDUs utilize non-potable plant water (3W) as dilution water, static mixing, and mechanical mixing to accomplish this activation process. The desired dilute polymer active concentration range varies with the type of polymer being used. For the best performance of a GBT/BFP unit, the typical percent active concentration range is 0.1 to 0.5 percent.

There are two PDU's (10-FDR-110 and 10-FDR-120) located in the Solids Handling Facility. Photo 8.4 shows the PDU No 1. The main components of these units are the polymer metering pump, the dilution water control system, and the mixing chamber. The polymer metering pump controls the flow of concentrated polymer to the mixing chamber. Dilution water is introduced upstream of the mixing chamber, and downstream of the mixing chamber. Primary dilution water, which is introduced upstream of the chamber, is added to control the concentration and viscosity of the polymer solution in the mixing chamber.

In addition to accurately diluting and activating the polymer, PDUs also feed the polymer to the GBT/BFP units. The PDU's are piped to feed diluted activated polymer to any GBT/BFP unit by opening and closing the appropriate valves. When the polymer solution feed pump is directed to an alternate GBT/BFP unit, the pumps must be operated in HAND mode.

Do not operate the neat polymer pump unless all components of the PDU are in service; due to dilution units are easily fouled by neat polymer. Subsequent mixing is provided by a static in-line mixer after the post dilution water connection. The static mixer combines the 3W and polymer to reduce the number of "fish eyes." "Fish eyes" is a common reference to polymer chains that do not unwind and activate.

8.4.6.2.1 *PDU Controls*

The PDUs (10-FDR-110 and 10-FDR-120) can be controlled by the PLC, through the SCADA system, or locally using ON-OFF-REMOTE selector switch located on the VCP, which is located next to each unit. Also located at the MCC-P4 are VFDs for each unit, which consists of a manual speed potentiometer that can be used to locally adjust the speed of the pump, refer to Photo 8.4.

1. With the ON-OFF-REMOTE selector switch at the VCP in the **ON** position, the PDU will start and the **SPEED** is adjusted by the operator at the metering pump.

Polymer Dilution Unit No. 1

PHOTO 8.4

California Department of Corrections
and Rehabilitation
Deuel Vocational Institution Wastewater Treatment Plant
Operations and Maintenance Manual

carollo
Engineers...Working Wonders With Water®

2. With the ON-OFF-REMOTE selector switch at the VCP in the **OFF** position, the PDU is prohibited from running.
3. With the ON-OFF-REMOTE selector switch at the VCP in the **REMOTE** position, the PDU is controlled through the PLC:
    a. With the HAND-OFF-AUTO selector switch at the pop-up window in the **HAND** position, the selected PDU is controlled manually by the operator using the **START**/**STOP** pushbuttons and entering a percent **SPEED**.
    b. With the HAND-OFF-AUTO selector switch at the pop-up window in the **OFF** position, the selected PDU is prohibited from running.
    c. With the HAND-OFF-AUTO selector switch at the pop-up window in the **AUTO** position, the selected PDU is controlled by the PLC.

Normal operation for the PDU is REMOTE-AUTO control mode. In REMOTE-AUTO control mode, PDU operation is started based on the start sequence from the GBT/BFP VCP. The PDU is then controlled with the Flow Pace Control Mode: the operator enters a desired dose, chemical concentration, and feeder calibration information; the PLC then adjusts the feed rate of the PDU to deliver that chemical dose into a measured process stream.

8.4.6.3 Polymer Static Mixers

An inline static mixer blends sludge pumped from GBT/BFP feed pumps and activated polymer solution prior to discharging to the GBT/BFP units. The static mixer allows the polymer and sludge to mix instantly and is adjustable during operation.

8.4.7 GBT/BFP Cake Collection System

The biosolids are transported from the GBT/BFP discharge hopper to the loading trucks via shafted screw conveyors. The GBT/BFP discharge conveyor (10-CON-131) transports the biosolids cake from the GBT/BFPs to the inclined conveyor (10-CON-132). Photo 8.5 shows the layout of the Inclined Screw Conveyors. The inclined conveyor transports biosolids cake from the discharge conveyor to the storage bin before the cake is hauled away.

8.4.7.1 Conveyor Controls

The LCP for each screw conveyor (10-CON-131 and 10-CON-132) contains a START/LOCKOUT/STOP/RESET pushbuttons and LOCAL-OFF-REMOTE selector switch, which is located adjacent to the equipment. The EMERGENY STOP safety pull wire is located adjacent to the equipment and will immediately stop the unit if pulled. Activation of the safety pull wire will generate an alarm at the SCADA system. The operational status and alarms for the screw conveyors are displayed at the SCADA system; refer to Photo 8.5.

1. With the L-O-R selector switch at the LCP in the **LOCAL** position, the screw conveyor is controlled manually by the operator using the **START/STOP** pushbuttons.

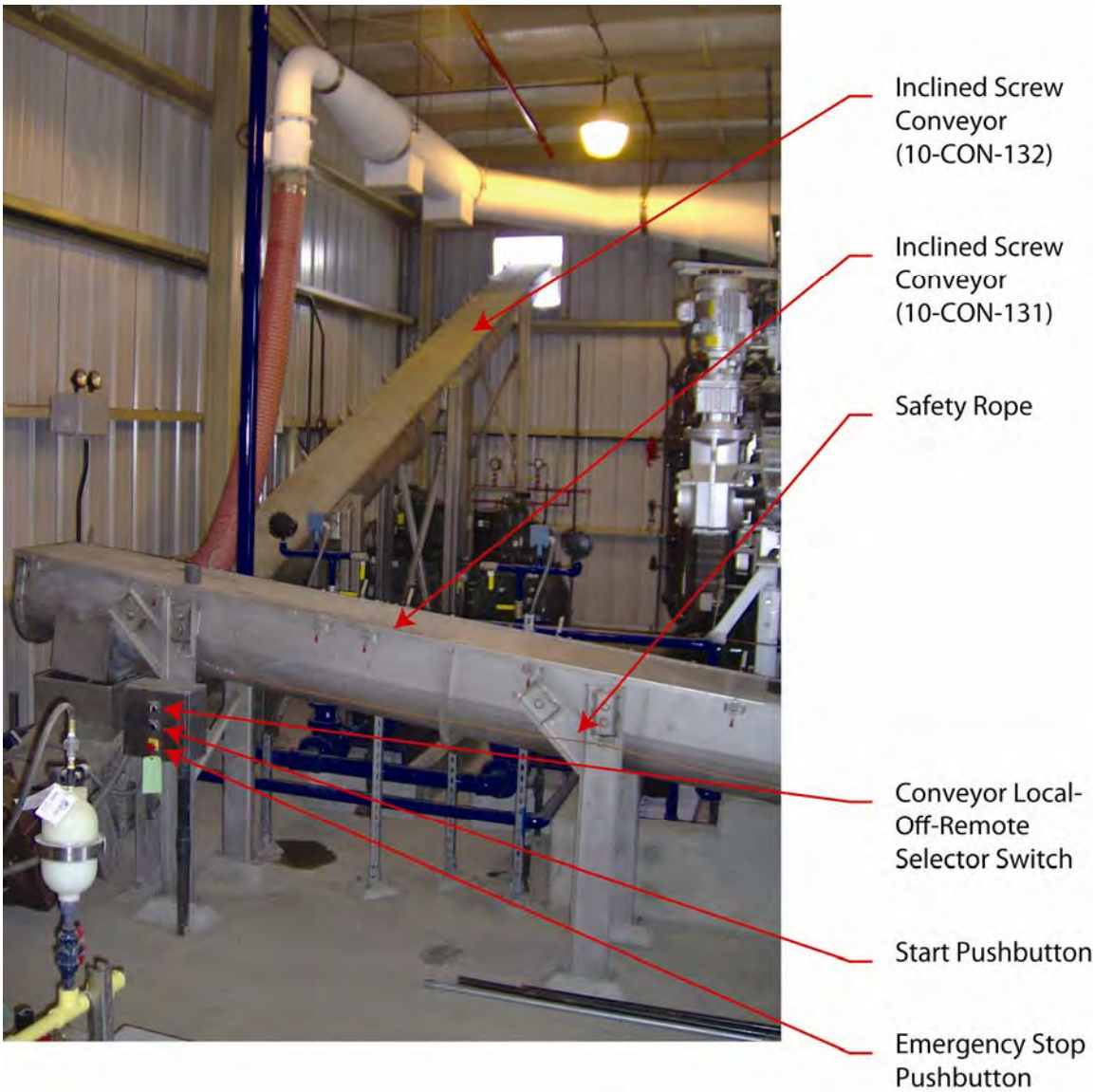

Inclined Screw Conveyors

PHOTO 8.5

California Department of Corrections
and Rehabilitation
Deuel Vocational Institution Wastewater Treatment Plant
Operations and Maintenance Manual

carollo
Engineers...Working Wonders With Water®

2. With the L-O-R selector switch at the LCP in the **OFF** position, the screw conveyor is prohibited from running.
3. With the L-O-R selector switch at the LCP in the **REMOTE** position, the screw conveyor is controlled through the PLC.

Normal operation for the screw conveyors is REMOTE control mode. In REMOTE control mode, the screw conveyor (10-CON-131 and 10-CON-132) controls are interlocked with the controls of the GBT/BFP PLC for automatic sequence control. Thus, upon received an "AUTO-START" command from the GBT/BFP PLC, the inclined conveyor shall start. The discharge conveyor shall then start after the confirmed "RUN" of the inclined conveyor. A "CONVEYORS ARE RUNNING" signal shall be provided for the GBT/BFPs controls to confirm that the conveyors are running. Upon receiving an "Auto-Stop" signal from the GBT/BFP controls, the conveyor system shall continue to run for an adjustable period before coming to a complete stop.

8.4.7.2 Cake Loading

Cake loading into the storage bin is a manual process controlled from the field. During GBT/BFP operation, check the bin loading every two hours to observe the filling process and make sure the bin is not overfilled. Photo 8.6 shows the Truck Loading Area.

8.4.8 Thickened Waste Activated Sludge Feed System

8.4.8.1 TWAS Hopper and Feed Pumps

TWAS is pumped from the TWAS hopper to the SST utilizing two 20-hp, progressive cavity type pumps (10-PMP-115 and 10-PMP-215). Each pump has been designed to operate at a capacity of 50 at a TDH of 24 feet. Photo 8.7 shows TWAS Pump No. 2.

The progressive cavity positive displacement pumps utilized for pumping TWAS to the SST have unique operational constraints. Do not operate these pumps with closed suction or discharge valves. If the suction valve is closed, the unlubricated rotor and stator will generate heat from friction and damage the pump. If the discharge valve is closed, a progressive cavity pump can develop enough pressure to cause a catastrophic failure of the discharge piping or fittings, resulting in injury to operators within close proximity to the system. The suction and discharge of each pump is equipped with a pressure gauge so that the operating characteristic of the pump can be monitored. Abnormally low suction pressures or high discharge pressures could indicate a closed valve or a blocked line. These pumps do not have a pressure relief safety valve. The discharge of these pumps is equipped with a pressure switch. If the pressure switch closes, indicating an abnormal pressure condition, the pump will not run and an alarm will be observed at the OIS.

Truck Loading Area

PHOTO 8.6

California Department of Corrections
and Rehabilitation
Deuel Vocational Institution Wastewater Treatment Plant
Operations and Maintenance Manual

H:\Client\CDC SAC\6927\6927R11 - DVI - DD and CD Phase\O&M Manual\O&MManualPhotos\WordFiles\PhotoNo8.6.doc

carollo
Engineers...Working Wonders With Water®

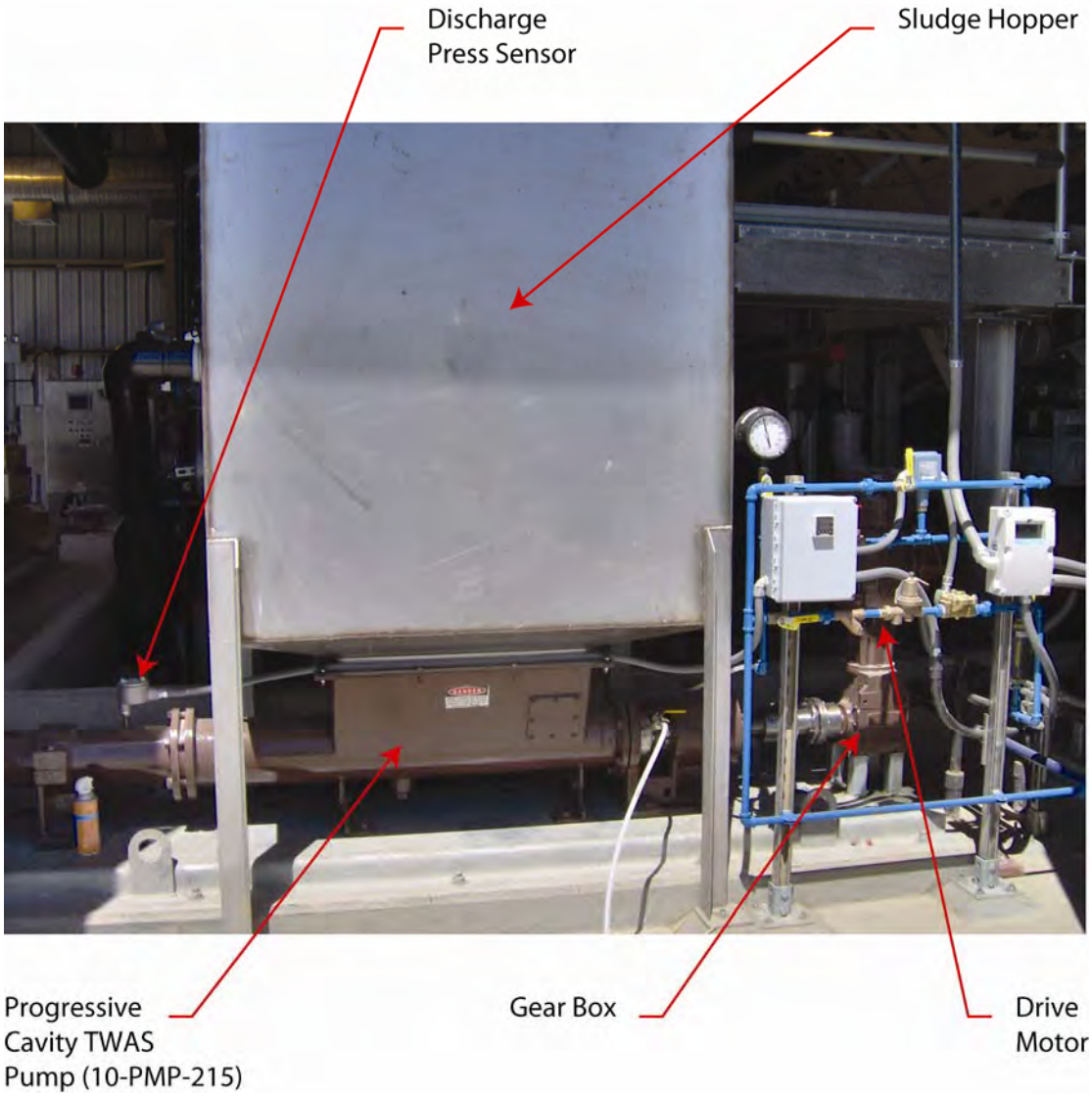

TWAS Pump No. 2

PHOTO 8.7

California Department of Corrections
and Rehabilitation
Deuel Vocational Institution Wastewater Treatment Plant
Operations and Maintenance Manual

carollo
Engineers...Working Wonders With Water®

8.4.8.1.1 *TWAS Feed Pump Controls*

Each TWAS pump (10-PMP-115 and 10-PMP-215) has START/LOCKOUT/STOP/RESET pushbuttons and L-O-R selector switch at MCC-P4. Also located at the MCC-P4 is the VFD for each pump, which consists of a manual speed potentiometer that can be used to locally adjust the speed of the pump.

1. With the L-O-R selector switch at MCC-P4 in the **LOCAL** position, the TWAS pump is controlled manually by the operator using the **START/STOP** pushbuttons and **SPEED** potentiometer.
2. With the L-O-R selector switch at MCC-P4 in the **OFF** position, the TWAS pump is prohibited from running.
3. With the L-O-R selector switch at MCC-P4 in the **REMOTE** position, the TWAS pump is controlled through the PLC:
    a. With the HAND-OFF-AUTO selector switch at the pop-up window in the **HAND** position, the selected TWAS pump is controlled manually by the operator using the **START**/**STOP** pushbuttons and entering a percent **SPEED**.
    b. With the HAND-OFF-AUTO selector switch at the pop-up window in the **OFF** position, the selected TWAS pump is prohibited from running.
    c. With the HAND-OFF-AUTO selector switch at the pop-up window in the **AUTO** position, the selected TWAS pump is controlled by the PLC.

Normal operation for the TWAS pumps is REMOTE-AUTO control mode. In REMOTE-AUTO control mode, TWAS pump operation is controlled based on the level in the TWAS hopper. When the level in the hopper reaches the level setpoint, the pump then modulates using a PI control to maintain a constant level in the pump hopper while the GBT/BFP is in the thickening mode. If the TWAS pump hopper level falls below the level setpoint for more than an adjustable time delay (initially set at 30 seconds), the pump shall stop until the hopper level setpoint is reached.

8.4.9 Solids Handing Facility Ventilation System

Figure 8.4 illustrates the layout for blower building HVAC.

8.4.9.1 <u>Solids Handling Building Exhaust Fan</u>

Ventilation of malodorous air and prevention of gas buildup in the solids handling structure is provided by an FRP base mount centrifugal type fan (10-EF-001). The solids handling building exhaust fan has a minimum capacity of 10,000 cfm.

8.4.9.1.1 *Solids Handling Building Exhaust Fan Controls*

The external power source for the solids handling building exhaust fan originates from lighting panel (07-LP-001), which is located in UV electrical room. An ON/OFF breaker is

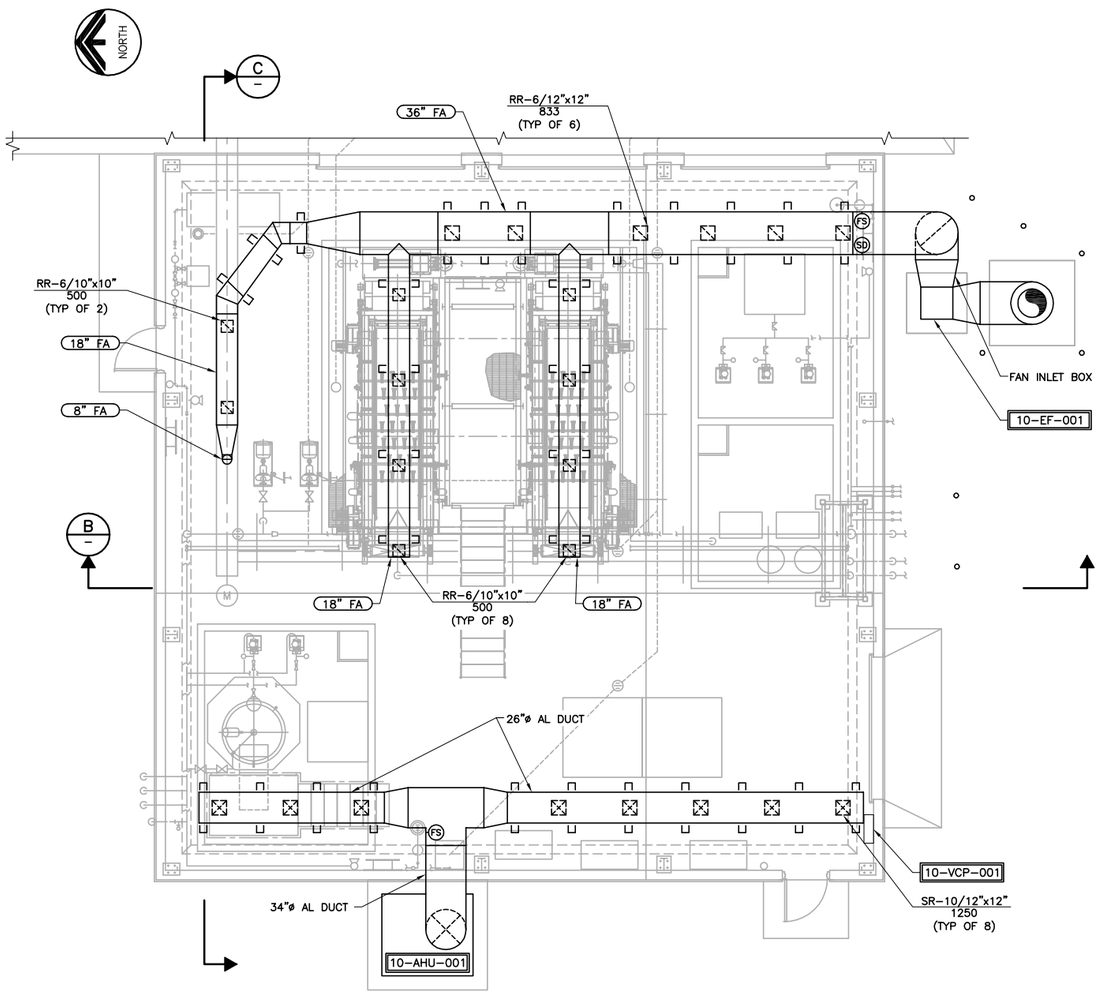

A PLAN – SOLIDS HANDLING FACILITY HVAC

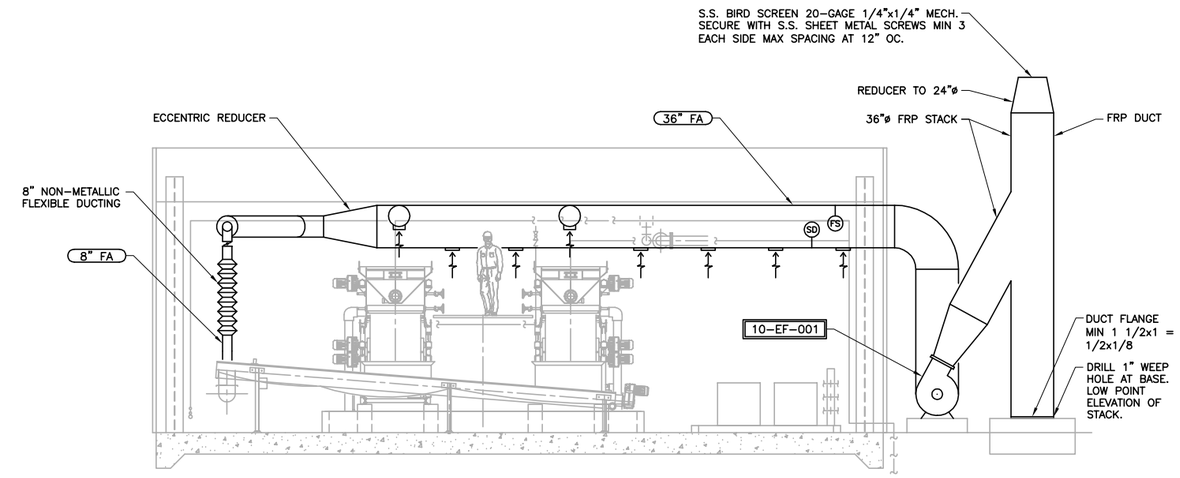

B SECTION

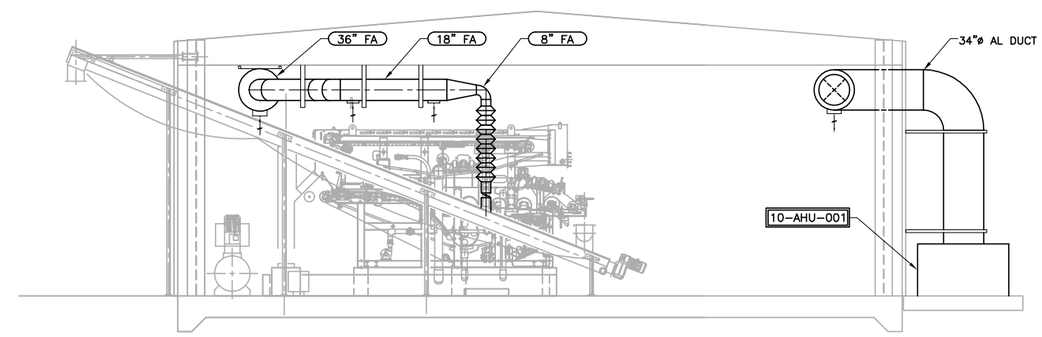

C SECTION

Figure No. 8.4

SOLIDS HANDLING FACILITY HVAC

DEUEL VOCATIONAL INSTITUTION (DVI) NEW WWTP

CALIFORNIA DEPARTMENT OF CORRECTIONS AND REHABILITATION

carollo

Engineers...Working Wonders With Water ™

provided at 07-LP-001. The solids handling building exhaust fan will be manually operated on a continuous basis.

8.5 PROCESS CONTROL

The following process calculations demonstrate ways to monitor the performance of the dewatering process.

8.5.1 Thickening Operation Mode

The GBT portion of the GBT/BFP is a filtration/straining process in which feed sludge (WAS) is flocculated with polymer to make cottage cheese like chunks with clear water in between the chunks. When the flocculated sludge is released onto the GBT belt, clear water can flow through the belt as filtrate. The remaining sludge is collected at the end of the belt and called TWAS. TWAS is pumped to the SST.

The one-meter GBT has a hydraulic capacity of approximately 300 gpm or a mass solids capacity of approximately 1,500 lbs/hr. As one of these limits is approached, process control becomes very important or the performance of the process may suffer.

8.5.1.1 <u>Solids Loading Rate</u>

The solids loading rate can be viewed in terms of mass pounds applied to the BFP system or the mass pounds per area of belt. Use either method to assess the quantity of material being handled. The information needed to determine the loading rate is:

1. Flow of feed sludge, assume 300 gpm
2. Bulk Density of the Feed Sludge (BDS) = 8.34 lbs/gallon
3. Solids concentration of feed sludge, assume 1 percent.
4. One-meter belt traveling at 15 fpm
5. Belt Width (BW) = 1-meter
6. Conversion Factor = 60 min/hour

In order to determine the solids loading rate on the BFP, the WAS flow rate (usually measured by a magnetic flow meter or a calibration tank), the total solids concentration of the WAS and belt width must be known.

1. The amount of solids loading thickened in the BFP is determined by the following calculations:

*Solids Loading Rate, lbs/hr-meter = ((SFR * BDS * (STSC/100%) * 60)/(BW))*

*Solids Loading Rate, lbs/hr-meter = ((300 gpm * 8.34 lbs/gallon * (1.0%/100%) *60 min./hour)/(1 meter)) = 1,500 lbs/hr-meter*

1. To determine the loading rate per square foot of BFP fabric. First, calculate the amount of belt fabric used in an hour:

*Belt Fabric Used in an Hour, ft^2/hr = (BW * 3.28 ft/meter * 60 min./hour)*

*Belt Fabric Used in an Hour, ft^2/hr = (1 meter * 3.28 ft/meter * 60 min./hour) = 2,952 ft^2/hour*

2. Then, divide the solids fed by the amount of fabric used:

Loading Rate, lbs/ft^2 = (1,000 lbs/hr) / (2,952 ft^2/hour) = 0.51 lbs/ft^2

Hydraulic loading rate is another method to measure how heavily loaded a treatment process is. The gallons per square foot is calculated by dividing the combined flow of sludge and polymer by the area of the belt per unit time.

8.5.1.2 Solids Capture

Solids capture is a method for evaluating the overall efficiency of the process. Process optimization seeks to obtain the highest percent capture with the lowest polymer dose. Some solids will always stick to the GBT belt and get washed off by the belt washer. Material not captured by the GBT makes up most of the of the filtrate flow and solids concentration. Although 100 percent capture is not possible, the more solids that are returned to the treatment process the harder the secondary processes or pond process must work to meet permit limits. The information needed to determine the solids capture rate is:

1. Solids concentration of filtrate (FTS) = 400 mg/L or 0.0400%
2. Solids concentration of the cake (CS) = 6.0%
3. Solids concentration of WAS feed (FS) = 1.0%

The capture of the thickening process is determined by the following calculations:

*Capture Rate, % = 100 *((CS/FS))*((FS-FTS) / (CS-FTS))*

*Capture Rate, % = 100 * ((6.0% / 1.0%))*((1.0% - 0.0400%)/(6.0% - 0.0400%)) = 96.6%*

8.5.1.3 Polymer Dilution

Effective use of polymer requires that the emulsion polymer gets mixed and activated. During polymer dilution, the coiled polymer molecule unwinds so it is effective in the flocculation of solids. Polymer is usually made in a 0.2 to 0.4 percent active solution. The lower the solution strength, the more extra water must pass through the GBT belt, but the better distribution of polymer in the feed sludge. The information needed to determine the dilution for polymer is:

Data required:

1. Primary dilution water added to polymer dilution unit, assume 20 gpm.

2. Neat polymer flow per calibration column, assume 780 ml in two minutes.

3. Polymer activity, assume 50 percent.

4. Polymer specific gravity, assume one, which is the same as water at 8.34 lbs/gallon.

The capture of the thickening process is determined by the following calculations:

1. Convert calibrated draw down of neat polymer flow in gallons per minute:

*Polymer Flow, gpm = 780 ml / 1000 ml/l * 0.2642 gal/l / 2 min draw down = 0.103 gal/min*

2. Determine the weight of polymer pumped into the polymer dilution unit:

Polymer Flow, lbs/min = polymer flow, gal./min x activity x weight of solution, lbs/gal

Polymer Flow, lbs/min = 0.103 gal./min x 0.5 x 8.34 lbs/gal = 0.43 lbs/min

3. Then, concentration equals the ratio of the weight of polymer to the weight of water:

Concentration, % = polymer, lbs/min / (water flow, gpm x weight of water, lbs/gal)

Concentration, % = 0.43 lbs/min / (20 gpm x 8.34 lbs/gal) = 0.0026, or 0.26%

If the polymer concentration is high, additional secondary dilution water may be added after the metering pump by adjusting the gate valve on the carrier water rotameter.

8.5.1.4 Polymer Dosage

Polymer is used to destabilize and capture the small particles in the feed sludge going to the GBT. Proper coagulation flocculates the sludge and enables it to release clear water. Too little polymer could cause a low capture rate by allowing fine solids through the belt. Excessive polymer could cause the belt fabric to blind and prevent the filtrate from draining through the belt. For a given type of sludge, polymer dosage is generally solids dependent; the lower the percent solids, the higher the chemical dosage required. Typical polymer dosage for a GBT process with WAS is 6 to 10 lbs/dry ton. The information needed to determine polymer dose is:

Data required:

1. Flow of feed sludge, assume 70 gpm.

2. Solids concentration of feed sludge, assume 0.6 percent.

3. Dilute polymer flow 5.0 gallons per minute.

4. Dilute polymer concentration 0.0185 percent.

Given this information, the following steps are taken to determine the polymer dose:

1. Determine the loading rate on the GBT:

Dry ton per hour loading, Dry ton/hour = Flow, gpm x concentration x weigh of sludge / 2000 lbs/ton

Dry ton per hour loading, Dry ton/hour = 70 gpm x 0.006 x 8.34 lbs/gal x 60 min/hour / 2000 lbs/ton = 0.11 ton/hour

2. Determine the polymer dose applied to the process:

Polymer Dose, lbs/hour = flow, gal/min x concentration x weight of polymer, lbs/gal
Polymer Dose, lb./hour = 5.0 gal/min x 0.000185 x 8.34 lbs/gal x 60 min/hour = 0.46 lbs/hour

3. Determine the polymer dose applied to the feed sludge:

Polymer dose, lbs/dry ton = Polymer dose, lbs/hour ÷ feed rate, ton/hour

Polymer dose, lbs/dry ton = 0.46 lbs/hour ÷ 0.11 ton/hour = 4.2 lbs/dry ton

Polymer is an expensive chemical. Polymer is commonly discussed in terms of pounds per dry ton of sludge processed. It is also possible to calculate the dose of polymer in mg/L of sludge feed by converting the polymer dose applied to the process from pounds to milligrams and converting the feed rate from gallons to liters. The following steps calculate this solution:

1. Determine the loading rate on the GBT:

Loading rate L/min = flow, gal/min x 3.785 L/gal

Loading rate L/min = 70 gal/min x 3.785 L/gal = 265 L/min

2. Determine polymer dose applied to the process:

Polymer dose mg/min = flow, gal/min x concentration x weight of polymer, mg./gal
Polymer dose mg/min = 6.2 gal/min x 0.0026 x 3782960 mg/gal = 60,981 mg/min

3. Determine the polymer dose applied to the feed sludge:

Polymer dose, mg/L = Polymer dose mg/min ÷ feed rate L/min

Polymer dose, mg/L = 60,981 mg/min ÷ 1135.5 L/min = 53.7 mg/L

The cost of polymer is usually quoted in terms of dollars per pound as delivered. When evaluating different polymers for long-term use, all calculations must be completed accounting for the activity or strength of each product. Emulsion polymer is typically 30 to 50 percent active. The manufacturer reports the activity of a polymer. If multiple polymers are evaluated, each one may have a different percent active ingredient. In most cases, polymers are paid for by the weight of pure polymer in the concentrated emulsion delivered. When doing polymer evaluations make sure the costs involved with each product are compared on an equal basis.

8.5.2 Dewatering Operation Mode

8.5.2.1 Solids Loading Rate

The solids loading rate can be viewed in terms of mass pounds applied to the GBT/BFP system or the mass pounds per area of belt. Use either method to assess the quantity of material being handled. The information needed to determine the loading rate is:

1. Flow of feed sludge, assume 100 gpm.
2. Solids concentration of feed sludge, assume two percent.
3. One meter belt traveling at seven feet per minute.

Given this information, the following steps are taken to determine the loading:

1. Determine the loading rate on the GBT/BFP:

Pounds per hour loading, Lbs/hour = flow x concentration x weight of sludge

Pounds per hour loading, Lbs/hour = 100 gal/min x 0.02 x 8.34 lbs/gal x 60 min/hour = 1000 lbs/hour

2. Determine the loading rate per square foot of GBT/BFP fabric. First, calculate the amount of belt fabric used in an hour.

Loading rate per square foot, lbs/ft^2 = 1 meter x 3.28 ft/m x 7 ft/min x 60 min/hour = 2,755 ft^2/hour

Then, divide the solids fed by the amount of fabric used.

Loading rate, lbs/ft^2 = 1000 lbs/hr ÷ 2,755 ft^2/hour = 0.36 lbs/ft^2

Hydraulic loading rate is another method to measure how heavily loaded a treatment process is. The gallons per square foot is calculated by dividing the combined flow of sludge and polymer by the area of belt per unit time.

8.5.2.2 Solids Capture

The information needed to determine the solids capture rate is:

1. Solids concentration of TWAS feed, assume four percent.
2. Solids concentration of the cake, assume 14 percent.
3. Solids concentration of filtrate, assume 800 mg/l, or 0.08 percent.

Given this information, use the following equation to determine the capture rate:

Percent Capture, % = ((cake x (feed – filtrate)) ÷ (feed x (cake – filtrate))) x 100%

Percent Capture, % = ((0.14 x (0.04 – 0.0008)) ÷ (0.04 x (0.14 – 0.0008))) x 100% = 98.6%

8.5.2.3 Polymer Dilution

The information needed to determine the dilution for polymer is:

1. Primary dilution water added to polymer dilution unit, assume 20 gpm.
2. Neat polymer flow per calibration column, assume 780 ml in two minutes.
3. Polymer activity, assume 50 percent.
4. Polymer specific gravity, assume one, which is the same as water at 8.34 lbs/gallon.

Given this information, the following steps are taken to determine the polymer dilution:

1. Convert calibrated draw down of neat polymer flow in gallons per minute:

*Polymer Flow, gpm = 780 ml / 1000 ml/l * 0.2642 gal/l / 2 min draw down = 0.103 gal/min*

2. Determine the weight of polymer pumped into the polymer dilution unit:

Polymer Flow, lbs/min = polymer flow, gal./min x activity x weight of solution, lbs/gal

Polymer Flow, lbs/min = 0.103 gal./min x 0.5 x 8.34 lbs/gal = 0.43 lbs/min

3. Then, concentration equals the ratio of the weight of polymer to the weight of water:

Concentration, % = polymer, lbs/min / (water flow, gpm x weight of water, lbs/gal)

Concentration, % = 0.43 lbs/min / (20 gpm x 8.34 lbs/gal) = 0.0026, or 0.26%

8.5.2.4 Polymer Dosage

The information needed to determine polymer dose is:

1. Flow of feed sludge, assume 100 gpm.
2. Solids concentration of feed sludge, assume four percent.
3. Dilute polymer flow 6.2 gallons per minute.
4. Dilute polymer concentration 0.26 percent.

Given this information, the following steps are taken to determine the polymer dose:

1. Determine the loading rate on the BFP:

Dry ton per hour loading, ton/hour = flow x concentration x weight of sludge ÷ 2000 lbs/ton

Dry ton/hour = 100 gal/min x 0.04 x 8.34 lbs/gal x 60 min/hour ÷ 2000 lbs/ton = 1.0 ton/hour

2. Determine the polymer dose applied to the process:

Pounds per hour dose = flow gal/min x concentration x weight of polymer lbs/gal

Lbs/hour = 6.2 gal/min x 0.0026 x 8.34 lbs/gal x 60 min/hour = 8.07 lbs/hour

3. Determine the polymer dose applied to the feed sludge:

Polymer dose, lbs/dry ton = Polymer dose lbs/hour ÷ feed rate ton/hour

Polymer dose, lbs/dry ton = 8.07 lbs/hour ÷ 1.0 ton/hour = 8.1 lbs/dry ton

The following steps calculate this solution:

1. Determine the loading rate on the GBT/BFP:

Loading rate, L/min = flow gal/min x 3.785 L/gal

Loading rate, L/min = 100 gal/min x 3.785 L/gal = 378.5 L/min

2. Determine polymer dose applied to the process:

Polymer dose, mg/min = flow gal/min x concentration x weight of polymer mg./gal

Polymer dose, mg/min = 6.2 gal/min x 0.0026 x 3782960 mg/gal = 60,981 mg/min

3. Determine the polymer dose applied to the feed sludge:

Polymer dose, mg/L = Polymer dose mg/min ÷ feed rate L/min

Polymer dose, mg/L = 60,981 mg/min ÷ 378.5 L/min = 161 mg/L

8.6 NORMAL OPERATION PROCEDURES

This section describes operation of the solids handling system after the system has been started and is ready for normal operation. Startup/Shutdown procedures are outlined in preceding sections of this manual. In addition to the information presented, the equipment manufacturer's O&M manual should be consulted for normal operating procedures and maintenance schedules.

8.6.1 Sludge Storage Tank

1. Review the operating status of the SST equipment and instruments at the OIS every two hours.
2. Review operational logs of the SST and laboratory reports for recent operating conditions including solids retention time, return activated sludge (RAS), and WAS rates daily.
3. Check that the SST has uniform fine air bubble patterns throughout the tanks daily. Check for unusual odors around the tank that can suggest a change in influent constituents or strength.
4. Collect mixed liquor suspended solids and RAS samples from process for operational control analysis daily.

5. Check that foam and scum are not building up or collecting in the tanks daily. Modify spray control and operation as required.
6. Lubricate aeration air valves per manufacturer's recommended maintenance schedule.
7. Lubricate sluice and weir gates per manufacturer's recommended maintenance schedule.
8. Weekly, wash down walk surfaces, channels, and walls.
9. Weekly, check and calibrate DO meters and transmitters.
10. Weekly, check DO profile across aeration tank.
11. Annually, check and clean sludge storage tank membrane diffusers.
12. Annually, check and calibrate flow meters.

8.6.2 Sludge Feed System

1. Check the operation of the GBT/BFP feed pumps every few hours.
2. Listen for any indication of abnormal operation.
3. Look for anything showing unusual or excessive wear. If a specific problem is noted, consult the manufacturer’s O&M manual for proper troubleshooting procedures.
4. Daily, check the pumps for excessive vibration, noise, overheating, proper seal water flow, and lubricant leakage.
5. Monitor all alarms in the alarm register at the OIS. If an alarm is indicated, consult the manufacturer’s O&M manual for troubleshooting procedures.
6. Lubricate equipment as necessary.
7. Weekly, wash down wet well and pumps.

8.6.3 Polymer System

1. Check and record the level in the polymer storage tote.
2. Check for positive neat polymer flow by doing a calibrated drawdown. Calculate the polymer concentration.
3. Check valves for proper positioning and operation.
4. Check pressure gauges for proper pressure levels.
5. Check inlet and outlet lines to be sure there are no leaks in the system.
6. Visually inspect the solution through the clear static mixers on the discharge of the dilute polymer metering pump. Look for any "fish eyes" or string-like polymer.

8.6.4 GBT/BFP System

1. Once every couple of hours, check the GBT/BFP and appurtenant equipment for proper operation. Check the operational systems and make process adjustments as necessary.
2. Check sludge feed flow and polymer flow and determine if the polymer dose rate is within normal bounds.
3. Check gravity zone and clear hair balls out of chicanes.
4. Verify even distribution of flow across width of gravity zone.
5. Verify gravity zone is draining properly and evenly. Excessive polymer dose is indicated by pools of clear water. Under dosed polymer is indicated by wet unflocculated sludge at the end of the gravity zone.
6. Check dewatering belts for proper alignment.
7. Check dandy roller and first pressure roller for sludge extrusion indicating either excessive solids loading or too little polymer dose.
8. Hose down belt filter press frame to clear solids accumulation from areas of the process that receive little flow.
9. Check doctor blades and clear hair buildup if required.
10. When samples are collected to assess process performance, also record operating information including belt speed, flow rate, polymer flow, and dose.
11. Hose down belt filter press sump area to clear solids accumulation from areas of the process that receive little flow or have poor drainage.
12. Check area around the filter presses for hazardous conditions. Make certain that the area is cleaned of any polymer, cake, or sludge that has spilled.

CAUTION: Polymer solution and sludge containing polymer is extremely slippery on walking surfaces. As a safety precaution, care should be taken when walking in areas that may be exposed to polymer or sludge, and any spills should be cleaned as soon as possible. Use special care when walking inside the BFP containment sump either in front or behind the equipment.

8.6.5 Wash Water Booster Pumps

1. Check the operation of the pump. Listen for any indication of abnormal operation. Look for anything showing unusual or excessive wear. If a specific problem is noted, consult the manufacturer's O&M manual for proper troubleshooting procedure.
2. Monitor all alarms in the alarm register at the OIS. If an alarm is indicated, consult the manufacturer's O&M manual for troubleshooting procedures.

3. Check the pumps for excessive vibration, noise, overheating, proper seal water flow and lubricant leakage daily.
4. Check the pump suction and discharge pressure daily.
5. Lubricate equipment as necessary.

8.6.6 GBT/BFP Cake Collection System

1. Once every couple of hours, check the cake collection system.
2. Check the cake collection bin and replace with empty bin as necessary.
3. Lubricate screw conveyors as necessary.

8.6.7 TWAS Feed System

1. Check the operation of the pump.
2. Listen for any indication of abnormal operation.
3. Look for anything showing unusual or excessive wear. If a specific problem is noted, consult the manufacturer's O&M manual for proper troubleshooting procedure.
4. Monitor all alarms in the alarm register at the OIS. If an alarm is indicated, consult the manufacturer's O&M manual for troubleshooting procedures.
5. Daily, check the pumps for excessive vibration, noise, overheating, proper seal water flow, and lubricant leakage.
6. Daily, check the pump suction and discharge pressure.
7. Check TWAS hopper for TWAS build-up.
8. Lubricate equipment as necessary.
9. Weekly, wash down pumps.
10. Weekly, check mechanical seal for leakage, replace as necessary.
11. Weekly, wash down TWAS hopper to knock off any sludge that may build up in the hopper.
12. Annually, adjust top and bottom housing segments with shims as required by pump wear to maintain acceptable tolerances between pump housing and rotors.
13. Lubricate and maintain TWAS pump isolation values per manufacturer's recommendations.
14. Annually, check and calibrate level transmitter on the TWAS hopper.

8.7 EMERGENCY OPERATION PROCEDURES

This section describes the solids handling facilities under abnormal circumstances. Scenarios for different conditions are given, followed by suggested corrective actions to be taken.

8.7.1 Power Outage

1. During a power outage, after an adjustable time delay the emergency generator will start. The solids handling facility is not considered essential and will not run from emergency power. After regular power has been restored the process will need to be restarted manually. The restart should be delayed at least five minutes to ensure the rest of the plant restarts automatically and there are no other process problems.
2. SST level should be monitored if unable to mechanically dewater digested sludge. If the utility power outage is expected for an extended period of time, digested sludge should be sent directly to a sludge-hauling vehicle (tanker truck) until power is restored. This is for extreme emergency conditions only.

8.7.2 Sludge Feed Pump Inoperative

1. If a pump becomes inoperative and cannot be restarted or repaired, remove the equipment from service. Select alternate standby equipment for duty status.

8.7.3 Polymer Dilution Unit Inoperative

1. If a system becomes inoperative and cannot be restarted or repaired, remove the equipment from service. Select alternate standby equipment for duty status.

8.7.4 GBT/BFP Shutdown

1. The GBT/BFP will shutdown automatically if an equipment interlock is tripped, if the stop pushbutton is pressed, or certain alarms are registered.
2. If this occurs, keep the GBT/BFP offline and determine the cause of the shutdown.
3. Do not restart the GBT/BFP until the problem is located and corrected.

8.7.5 TWAS Pump Inoperative

1. Shutdown the GBT/BFP and all appurtenant equipment.
2. Check inoperative equipment and restart. If any component cannot be returned to service, take the GBT/BFP dewatering process out of service.

8.7.6 Cake Collection System Inoperative

1. Shutdown the GBT/BFP and all appurtenant equipment.
2. Check inoperative equipment and restart. If any component cannot be returned to service, take the GBT/BFP dewatering process out of service.

8.8 STARTUP/SHUTDOWN PROCEDURES

The following is a brief description of the sludge handling processes startup and shutdown procedures. Refer to the equipment O&M manuals for specific information regarding lubrication and specific equipment checks.

8.8.1 Sludge Storage Tank

8.8.1.1 Startup

1. Verify weir gates and sluice gates are in the correct position.
2. Inspect air diffusers to ensure they are not clogged.
3. Fill the SST with ML.
4. When the SST is approximately halfway full, switch on Aeration Blowers. Open all air valves.

8.8.1.2 Shutdown

1. Raise the weir in the influent splitter box to isolate the SST.
2. Using recirculation/transfer pump, divert ML to operational aeration tank.
3. Stop aeration blowers.
4. Open appropriate sluice gate to drain the tank.
5. Wash down the interior of the structure as water level drops.

8.8.2 Sludge Feed Pumps

8.8.2.1 Pre-Startup and Safety Check

1. Verify the sludge feed pumps are available for service.
2. Verify all equipment is off and locked out.
3. Lubricate equipment as specified in the manufacturer's O&M manual.
4. Check alarm systems. Test at the OIS and MCC.
5. Verify sludge storage wet well is free of debris, equipment, and personnel.
6. Check that all anchor bolts and fastening devices are secure.
7. When any wires relative to the power supply have been disconnected; disconnect drive assemblies and check for proper rotation. After checking rotation, reconnect drive.
8. Verify breakers to all pumps are closed.
9. Verify the water level in the wet well is sufficient for pump operation.
10. Check ultrasonic level detectors for wet well pump control.

8.8.2.2 Startup

1. Communication check. Notify all personnel involved that the sludge feed pumps are going to being operation and are ready to receive flow.
2. Verify the wastewater level in the sludge storage wet well is sufficient for pump operation.
3. Select lead, lag, and standby pumps.
4. Open discharge valves on all operating pump(s).
5. Turn on power to all operating pump(s) at MCC-P4. Check to make sure the circuit breakers at the MCC-P4 are reset.
6. Set the L-O-R selector switch at MCC-P4 to REMOTE. The PLC will control the pumps such that a constant wet well level is maintained.
7. Observe the operating sludge feed pumps and check that the pumps are delivering sludge and the pumps are not vibrating.
8. Check the operation of the ultrasonic level detectors.
9. Check the motor and alarm system to ensure there are no active alarms.

8.8.2.3 Shutdown

1. Communication check. Notify all personnel that the pumps are being shutdown.
2. Stop and lockout applicable pumps.
3. Turn off power to the pump(s) at the MCC-P4.
4. Close plug valves downstream of pump(s).
5. Adjust speed of remaining pumps as necessary to achieve desired pumping rate.
6. If shutdown is for entire sludge storage wet well, pump wet well down and wash down pumps and wet well with 3W. This will require provision for bypass pumping or be done in the middle of the night when flows are lowest.

8.8.3 Polymer System

8.8.3.1 Pre-Startup and Safety Check

1. Verify that the main power switch is in the OFF position. All other controls should be in the OFF position.
2. All valves on the water inlet line to the solenoid valve and the water flowmeter should be open. Check to make sure the valves on the polymer line to the polymer pump suction are open, as well as the valves on the solution outlet line to the GBT/BFP.
3. Check to make sure the mixing chamber is free of debris.
4. Check all piping for leaks and correct valve alignment as required.

5. Place the system in automatic and select which dilute polymer day tank is in service and the operating tank level setpoints.
6. Check polymer metering pump suction and discharge valve alignments.

8.8.3.2 Startup

1. Turn the power switch to ON position.
2. Set the L-O-R selector switch at MCC-P4 to REMOTE .
3. Adjust polymer flow/pump speed by using the PUMP SPEED knob and adjust the PUMP STROKE knob. See the manufacturer's O&M manual for more information.
4. Adjust water flow by adjusting the water flow control valve manually. Verify that the water is flowing via the rotameter. Set water flow by valve instructions per manufacturer's O&M manual.
5. Conduct a calibrated drawdown and calculate the concentration of polymer solution.

8.8.3.3 Shutdown

1. Turn power switch to OFF position.
2. If system is to be shutdown for more than two weeks, thoroughly flush the mixing chamber with clean water for 10 minutes, or until water flows clear from solution outlet. Flushing is not required for shorter shutdown periods.
3. If system is to be uninstalled and stored indefinitely, flush as described above and drain all water from mixing chamber. Clean polymer residue from the polymer pump, check valve, and polymer piping with polymer solvent or kerosene. Follow the storage guidelines per manufacturer's O&M manual.

8.8.4 GBT/BFP System

8.8.4.1 Pre-Startup and Safety Check

1. Check that all equipment is secured and locked out. All electric equipment associated with the GBT/BFP is secured at the MCC.
2. Secure all valves. Check that all the valves are closed during pre-startup.
3. Service all equipment. Perform maintenance on all mechanical equipment. Consult manufacturer's O&M manuals.
4. Check area and equipment. Make certain that area is free of debris and loose material on the ground, and that oil slicks and polymer spills are not present. Make certain that the quantity of polymer feed solution is sufficient and of the proper concentration.
5. Check filter belts for cleanliness. If streaks or blinded spots are present, be sure to clean belt thoroughly and check spray wash system for plugged or inoperative nozzles.

8.8.4.2 Startup

1. Inform all personnel that the GBT/BFP unit and associated equipment will be put in service.
2. Check operation of individual units of belt press. Put selector switch in MANUAL position and start each unit in sequence by using the remote manual controls at the OIS.
3. Stop manual operation. Put all selector switches into AUTO position.
4. Start automatic and continuous operation. Sludge dewatering system should automatically sequence the start of the various components.
5. Monitor the startup of the equipment and verify the proper polymer dose. Check for proper mechanical operation of the equipment.

8.8.4.3 Shutdown

1. Stop automatic operation by pressing STOP pushbutton.
2. Hose down the process to remove solids from the process equipment and sump area.

8.8.5 TWAS Feed System

8.8.5.1 Pre-Startup and Safety Check

1. Verify level in SST is adequate for TWAS pumping.
2. Verify TWAS pump suction and discharge valve alignment.
3. Remove “Do Not Operate” tags and energize the sludge pumps at the MCC.
4. Be sure seal water is supplied. Sludge pumps should start at normal settings. Monitor for proper operation and sludge quality. These pumps are positive displacement pumps and must not run against a closed discharge valve or without fluid.

8.8.5.2 Startup

1. Do not start pump against a closed discharge valve.
2. Check that the WAS pump, polymer system, and thickener are in REMOTE mode of operation.
3. Check to make sure the circuit breakers in the MCC are reset.
4. Open suction and discharge valves for the TWAS pump.
5. Verify that valves to thickener are open.
6. Verify the ultrasonic level indicator is operational.
7. Set LOCAL-OFF-REMOTE selector switch to REMOTE.
8. Pump will start when the thickened sludge reaches the preset level in the sludge hopper.

8.8.5.3 Shutdown

1. The pump will shutdown upon activation on alarm interlock. Do not restart pump until the cause of the alarm conditions has been determined and remedied.
2. In REMOTE mode, pump will automatically shutdown when the hopper low level is reached.
3. In LOCAL mode, turn OFF the pump either at MCC-P4 or by stopping the GBT/BFP.
4. LOCKOUT the pump at the local push-button station.
5. Close the isolation plug valves upstream and downstream of the pump.

8.8.5.4 GBT/BFP Cake Collection System

8.8.5.4.1 *Shutdown*

1. STOP and LOCKOUT the collection and incline conveyors at MCC-P4.

8.9 ALARM CONDITIONS

This section describes alarm conditions that can occur during operation of the sludge feed pumps, polymer system, GBT/BFP system, and TWAS collection system. The alarms provide for the operational surveillance of the facilities, alerting operators to abnormal conditions. Alarm conditions are annunciated through the PLC/OIS and/or at individual LCPs/VCPs.

8.9.1 Operational Strategies

When an alarm occurs, the operator who acknowledges the alarm at the LCP or OIS examines the process condition on the OIS, LCP, or MCC and takes corrective action, if possible. The operator then proceeds to the equipment or area originating the alarm (assuming that it is at a safe location). At the equipment that originated the alarm, the operator assesses the problem and determines the corrective actions required. The established safety procedures are to be observed during all operations, including operation under emergency conditions.

The following sections contain descriptions of each alarm, its indication, possible causes, and suggested response actions. The alarms listed here do not include any of the "intuitive" alarms created within the PLC. "Intuitive" alarms include those, which signal the failure of a PLC resident command. This section details actual process and instrumentation condition alarms incorporated in the design of the facility. Any subsequent modifications should be noted and addressed in this section of the O&M manual. Any alarms, which are added to the control system, should also be added to this chapter at the time of the addition to the system.

8.9.1.1 Sludge Feed Pumps

8.9.1.1.1 *Sludge Feed Pump Fail*

Indication: A fail alarm is indicated at the OIS and LCP. Pump will not start.

Action:

1. Acknowledge the alarm at the OIS.
2. Check MCC for trip condition.
3. Reset and restart tripped motor once.
4. If unit will not run, take it out of service.
5. Check for blockage of impeller.

8.9.1.1.2 *Motor High Temperature*

Indication: Pump Motor High Temperature.

Action:

1. Acknowledge the alarm at the OIS.
2. Insert standby pump into sequence.
3. Remove pump from wet well to determine if impeller is clogged.
4. Reset alarm at VFD/MCC

8.9.1.1.3 *Motor Casing Leakage*

Indication: Pump Motor Casing Leakage.

Action:

1. Acknowledge the alarm at the OIS.
2. Reset alarm at VFD/MCC.

8.9.1.2 Polymer System

8.9.1.2.1 *Polymer Dilution Unit Fail*

Indication: Polymer dilution unit fail alarm is indicated at the OIS. Polymer dilution unit will not start.

Action:

1. Acknowledge the alarm at the OIS.
2. Check lighting panel for trip condition.
3. Reset and restart polymer dilution unit once.

4. If starts, reset alarm at LCP. If unit will not run, remove unit from service. Switch standby unit to duty status.

8.9.1.2.2 *Polymer Dilution Unit Failure/PW Flow Loss*

Indication: PDU PW flow loss alarm is indicated at the OIS in conjunction with fail alarm, polymer dilution unit will not start.

Action:

1. Acknowledge the alarm at the OIS.
2. Verify water flow to PDU, and valves are correctly aligned.
3. Verify PW solenoid valve is working properly.
4. Reset and restart PDU once.
5. If PDU starts, reset alarm at LCP. If unit will not run, remove unit from service. Switch standby unit to duty status. Inspect flow switch for proper operation.

8.9.1.3 GBT/BFP System

8.9.1.3.1 *Washer Water Low Pressure*

Indication: Pump fail alarm is indicated at the OIS and LCP. Pump will not start.

Action:

1. Acknowledge the alarm at the OIS.
2. Check alignment valves to make sure there is no leakage.
3. Verify correct pump is operating.
4. Verify alarm was not caused by opening a washbox dump valve for nozzle cleaning.
5. Attempt to restart.

8.9.1.3.2 *GBT/BFP Drive Overload Alarm*

Indication: An overload alarm is indicated at the OIS and at the MCC.

Action:

1. Acknowledge the alarm at the OIS.
2. Check and reset motor.
3. Check for excessive vibration, unusual noise, or overheating of drive or gearbox.
4. Check Belt Tracking.
5. Check Belt Tension Hydraulic Unit.

8.9.1.3.3 *Belt Track Alarm*

Indication: A belt track alarm is indicated at the OIS.

Action:

1. Acknowledge the alarm at the OIS.
2. Check the belt tracking paddles for proper operation.
3. Check for solids accumulation on the belt tracking position switch.
4. Shutdown the belt filter press if tracking is a problem and the process cannot be watched constantly.

8.9.1.3.4 *Belt Track Alarm*

Indication: A belt broken alarm is indicated at the OIS. Auto shutdown is initiated.

Action:

1. Acknowledge the alarm at the OIS.
2. If belt not broken, investigate the tension rollers position switch.

CAUTION: If you have a broken belt, Do Not Restart. Use Belt Replacement procedures outlined by manufacturer to feed the new belt into the process by using the broken as a guide.

8.9.1.3.5 *Belt Tension Hydraulic Unit Low Pressure Alarm*

Indication: A Belt Tension Hydraulic Unit Low Pressure alarm is indicated at the OIS.

Action:

1. Acknowledge the alarm at the OIS.
2. Check hydraulic pack for hydraulic fluid level.
3. Look for hydraulic leaks.
4. Verify normal equipment operation.

8.9.1.3.6 *Belt Tension Hydraulic Unit Operation Alarm*

Indication: A Belt Tension Hydraulic Unit Low Pressure alarm is indicated at the OIS.

Action:

1. Acknowledge the alarm at the OIS.
2. Shutdown the filter press and investigate the problem.
3. When the problem is solved, restart the belt and get the cake off of it.

8.9.1.4 Cake Collection System

8.9.1.4.1 *GBT/BFP Cake Collection System*

Indication: Screw Conveyor Failure.

Action:

1. Acknowledge alarm at the OIS.
2. Check MCC for trip condition.
3. Check emergency pull cords for trip condition.
4. Reset and restart motor once.
5. If motor starts, reset alarm.
6. If unit will not run, remove from service. Suspend centrifuge dewatering until problem is resolved.

8.9.1.5 TWAS Feed System

8.9.1.5.1 *TWAS Feed Pump Fail*

Indication: A fail alarm is indicated at the OIS and LCP. Pump will not start.

Action:

1. Acknowledge alarm at the OIS.
2. Check MCC for trip condition.
3. Reset and restart tripped motor once.
4. If unit will not run, take it out of service.
5. Check for blockage of impeller.
6. Check motor for electrical problems.

8.9.1.5.2 *TWAS Feed Pump Discharge High Pressure*

Indication: A high-pressure alarm is indicated at the OIS.

Action:

1. Acknowledge alarm at the OIS.
2. Turn pump off.
3. Check for blocked valves and piping on discharge line.
4. Restart pump if blockage is cleared.

8.9.1.5.3 *TWAS Feed Pump Seal Water Failure*

Indication: A pump seal water fail alarm is indicated at the OIS and LCP. Pump will not start.

Action:

1. Acknowledge alarm at the OIS.
2. Check for blocked piping and valves. Check seal water rotameter.
3. Check seal water solenoid for proper operation.
4. Reset the alarm at the OIS.
5. Restart Pump.
6. Do not operate a pump without seal water.

8.9.2 Troubleshooting Strategies

Operations staff must have a good understanding of the solids handling system, which includes GBT/BFPs, polymer dilution units, progressive cavity pumps, ventilation system, associated equipment, and problem indicators. Table 8.6 and 8.7 present potential operational problems and possible solutions for GBT/BFPs and polymer dilution units, respectively. It should be noted that these tables are not all-inclusive and may not correct the observed problem. Table 8.8 presents potential operational problems and possible solutions for progressive cavity pumps (i.e., TWAS pumps). With respect to mechanical and equipment problems, maintenance personnel should be notified immediately.

Additional information on specific problems may be found in equipment manufacturers' literature or text discussing wastewater treatment.

Table 8.6 Troubleshooting Guide For GBT/BFP
DVI New Wastewater Treatment Plant
California Department of Corrections and Rehabilitation

Problem	Cause	Solution
Washing out of belt	• Polymer dosage insufficient.	• Increase polymer dose rate.
	• Hydraulic load too high.	• Lower sludge flow.
	• Belt speed too low.	• Increase belt speed.
	• Belt blinding.	• Increase wash water rate. Turn off sludge and polymer and clean belts. Reduce polymer if overdosing.

Table 8.6 Troubleshooting Guide For GBT/BFP DVI New Wastewater Treatment Plant California Department of Corrections and Rehabilitation		
Problem	**Cause**	**Solution**
Poor filter quality	• Washing out. • Sludge squeezed from belt.	• Increase polymer dose. • Decrease sludge pumping rate accordingly. • Decrease tension.
Cake solids too wet	• Belt speed too high. • Belt tension too low. • Changes in influent characteristics.	• Reduce belt speed. • Increase belt tension. • Adjustments to the upstream processes Adjustments to the chemical dosage.
Belts start to show streaks	• Plugged sprays.	• Clean spray nozzles as required and clean belts before operating.
Excessive belt wear	• Improper alignment of rollers. • Sludge buildup on bottom of belt or on rollers causing improper alignment.	• Adjust alignment of rollers. • Replace or repair faulty adjuster mechanism.
Insufficient sludge flow to the belt filter press	• Blockage in static mixer. • Misadjustment of polymer pump VFD. • Worn pump stator.	• Clean and put back into operation. • Adjust to provide proper feed. • Repair or replace as necessary.
Sludge feels “slimy”	• Excessive polymer dose.	• Decrease polymer dose.
Filtrate is foamy and “slimy”	• Excessive polymer dose.	• Decrease polymer dose.
Large weak flocs	• Insufficient polymer dose.	• Increase polymer dose.
Low capture rate	• Insufficient polymer dose.	• Increase polymer dose.
Low cake dryness	• Insufficient polymer dose.	• Increase polymer dose.

Table 8.7 Troubleshooting Guide For PDU's DVI New Wastewater Treatment Plant California Department of Corrections and Rehabilitation		
Problem	**Cause**	**Solution**
Dilution water solenoid valve not closing	• Contaminants stuck in valve/pilot seat. • Faulty control circuit. • Burned-out coil. • Low voltage supply.	• Disassemble, clean and re-install solenoid valve. • Check voltage to solenoid. • Check coil continuity; replace coil if bad. • Voltage must be at least 85% of nameplate rating.
Polymer pump loses prime	• Air leak in inlet piping. • Suction lift too high. • Foot valve in suction tubing stuck. • Inlet or outlet fittings in pump head are too tight. • Check valves in pump head are not sealing. • Stroke length is set too low.	• Tighten all polymer supply fittings. • Raise polymer tote above pump inlet fitting. • Remove, clean and **dry** foot valve. • Carefully hand-tighten fittings until snug. • Remove, clean and **dry** foot valve. • Increase stroke length to 30% (decrease speed to maintain same output).
Blender producing unblended polymer	• Low differential pressure. • Solution concentration too high.	• Check for proper differential pressure (50 Blender producing psi rec.). • Consult polymer manufacturer for optimal polymer Solution concentration too high solution concentration (0.1% to 0.5% is normal).
Polymer check valve leaking	• Valve plugged with polymer.	• See check valve cleaning instructions. • Check polymer suppy for lumps - install strainer between pump and check valve.

Table 8.7 Troubleshooting Guide For PDU's DVI New Wastewater Treatment Plant California Department of Corrections and Rehabilitation		
Problem	**Cause**	**Solution**
Polymer pump not pumping See also Polymer pump loses prime (above)	• Pressure switch (OPTIONAL) detects low pressure and disables pressure pump.	• Check water pressure. Recalibrate pumping detects low pressure and disables pressure switch to shut off pump at lower pump pressure.
	• Polymer check valve plugged.	• Remove, clean and reinstall check valve.
	• Pump discharge check valve failure.	• Disassemble and clean pump check valve.
System will not run	• Fuse blown.	• Replace fuse (see Electrical Diagram for sizing).
		• Check system current draw - it should not be more than 50% above the polymer pump motor nameplate current rating.
	• Dilution water differential pressure is low (40 psid) (Systems with optional pressure switch only).	• Check for closed valve, etc. in water supply and solution outlet piping; increase water inlet pressure.

Table 8.8 Troubleshooting Guide For Progressive Cavity Pumps DVI New Wastewater Treatment Plant California Department of Corrections and Rehabilitation		
Problem	**Cause**	**Solution**
Pump does not rotate	• Incorrect Power supply.	Check motor nameplate data; test voltage, phase, and frequency.
	• Foreign matter in pump.	Remove foreign matter.
	• If pump or stator is new, too much friction.	• Fill with liquid and hand turn. If still tight, lubricate stator with glycerin.
	• Stator swells due to high liquid temperature.	• Reduce liquid temperature or use an undersized rotor.
	• Blockage due to solids in liquid.	• Decrease solids-to-liquid ratio.
	• Liquid settles and hardens after pump shutdown.	• Clean and rinse pump after each use.
Pump does not discharge	• Air in suction pipe.	• Tighten connections to stop leaks.
	• Pump speed too low.	• Increase drive speed.
	• Stator worn excessively.	• Replace stator.
	• Rotor worn excessively.	• Replace rotor.
	• Wrong direction of rotation.	• Reverse drive motor polarity.

Table 8.8 Troubleshooting Guide For Progressive Cavity Pumps DVI New Wastewater Treatment Plant California Department of Corrections and Rehabilitation		
Problem	**Cause**	**Solution**
Discharge output low	• Incorrect power supply.	• Check motor nameplate data; test voltage, phase, and frequency.
	• Air in suction pipe.	• Tighten connections to stop leaks.
	• Pump speed too low.	• Increase drive speed.
	• Stator worn excessively.	• Replace stator.
	• Rotor worn excessively.	• Replace rotor.
	• Discharge pressure too high.	• Open discharge valve; remove obstruction.
	• Suction pipe leaks.	• Tighten pipe connections.
	• Shaft packing leaks.	• Tighten packing glands; replace packing.
	• Stator material brittle.	• Replace stator.
Discharge output fluctuates	• Air in suction pipe.	• Tighten connections to stop leaks.
	• Suction pipe leaks.	• Tighten pipe connections.
	• Shaft packing levels.	• Tighten packing gland; replace packing.

Table 8.8 Troubleshooting Guide For Progressive Cavity Pumps DVI New Wastewater Treatment Plant California Department of Corrections and Rehabilitation		
Problem	**Cause**	**Solution**
Pump drive overloaded	• Incorrect power supply.	• Check motor nameplate data; test voltage, phase, and frequency.
	• Foreign matter in pump.	• Remove foreign matter.
	• If pump or stator is new, too much static friction.	• Fill with liquid and hand turn. If still tight, lubricate stator with glycerin.
	• Blockage due to solids in liquid.	• Decrease solids-to-liquid ratio.
	• Liquid settles and hardens after pump shutdown.	• Clean and rinse pump after each use.
	• Pump running dry; no prime.	• Fill pump with liquid.
	• Discharge pressure too high.	• Open discharge valve, remove obstruction.
	• Pump speed too high.	• Reduce drive speed.
	• Liquid viscosity or specific gravity too high.	• Measure and compare with specification.
	• Packing too tight.	• Loosen gland nuts.
	• Bent drive shaft.	• Replace drive shaft.

Table 8.8 Troubleshooting Guide For Progressive Cavity Pumps DVI New Wastewater Treatment Plant California Department of Corrections and Rehabilitation		
Problem	**Cause**	**Solution**
Pump noisy	• Pump running dry; no prime.	• Fill pump with liquid.
	• Stator worn excessively.	• Replace stator.
	• Rotor worn excessively.	• Replace rotor.
	• Suction pipe leaks.	• Tighten pipe connections.
	• Stator material brittle.	• Replace stator.
	• Bent drive shaft.	• Replace drive shaft.
	• Drive and pump misaligned.	• Realign or replace coupling.
	• Flexible drive coupling worn.	• Repair or replace coupling.
	• Drive shaft bearings.	• Replace bearings.
Shaft seal leaks	• Liquid settles and hardens after pump shutdown.	• Clean and rinse pump after each use.
	• Wrong direction of rotation.	• Reverse drive motor polarity.
	• Drive shaft bearings worn.	• Replace bearings.
	• Incorrect packing.	• Change packing material.
	• Packing too loose.	• Tighten gland nuts.

Table 8.8 Troubleshooting Guide For Progressive Cavity Pumps DVI New Wastewater Treatment Plant California Department of Corrections and Rehabilitation		
Problem	**Cause**	**Solution**
Stator wears too fast	• Blockage because of solids in liquid. • Liquid settles and hardens after pump shutdown. • Pump running dry; no prime. • Rotor worn excessively. • Discharge pressure too high. • Stator material brittle.	• Decrease solids-to-liquid ratio. • Clean and rinse pump after each use. • Fill pump with liquid. • Replace rotor. • Open discharge valve, remove obstruction. • Replace stator.
Rotor wears too fast	• Liquid settles and hardens after pump shutdown. • Discharge pressure too high. • Stator material brittle.	• Clean and rinse pump after each use. • Open discharge valve, remove obstruction. • Replace stator.

8.10 SAFETY

These safety instructions are provided as general guidelines only for operation of the headworks facilities. They are not intended to replace existing plant safety instructions and procedures.

If there is any doubt whatsoever about the safety of performing any tasks related to the operation and maintenance of the equipment described here, do not proceed until the necessary protection is provided.

8.10.1 Motors and Electrical Panels

When working with electricity, you must always assume that there is sufficient voltage and current present to cause injury. As little as 12 volts or .005 amperes can be dangerous.

Whenever working on motors or electrical panels that are “hot,” still connected to the power source, or assumed to be “hot,” do not use your bare hands to perform any internal maintenance. The use of certified rubber electrician’s gloves with protective leather gloves

covering them is recommended. Voltages in treatment plants can run in excess of 4,000 volts; therefore, the rubber gloves should be certified for no less than 10,000 volts.

Prior to working on any of the above mentioned units in place:

1. Open or place in the "**OFF**" position all control switches for the unit.
2. Open the main and control power circuit breakers and lock them open or remove the fuses. The open circuit breaker should be tagged to indicate the reason for its being locked open.
3. Open any foreign voltage circuits that may be present and lock and tag them.
4. Before starting work on the piece of equipment, check all exposed terminals or connections with a voltmeter before removing the rubber gloves.

8.10.2 Pumps

Before working on any of the pumps in the plant, open, lockout, and tag the main and control power circuits as described above. No pump should be worked on internally while the control and main power circuits are still "hot" (see above). Double-check both suction and discharge valves to be positive they are closed. Relieve the internal pressure on the pump before the inspection cover is removed or dismantling of the pump begins. While working on the pump, keep the area as neat and orderly as possible. If sludge or any of the pump lubricant is spilled, it should be cleaned up immediately to prevent falls or other types of injuries or, in the case of the sludge, extended exposure to potentially harmful organisms.

8.10.3 GBT/BFP System

As a safety precaution, polymer solution and sludge containing polymer are extremely slippery on walking surfaces. Care should be taken when walking in areas that may be exposed to polymer. Grating and handrails should be used to prevent slipping. Area drains and washdown hoses are provided for housekeeping.

The GBT/BFPs are equipped with a trip wire at its base that can be activated to stop the press in the event someone's hand or appendage is caught in the rollers. Under no circumstances should this safety mechanism be disconnected. Always lockout any equipment before service or repair. Notify other operators of any unit malfunction and that you intend to repair it. Follow established safety procedures before and during the work. All structures and appurtenances should be kept in good repair and maintained in an orderly condition.

Some liquid polymers may irritate the skin. Avoid contact with polymers. Flush skin or eyes with water should accidental contact occur. Refer to manufacturer's warning labels and MSDS sheets for specific instructions.

Spilled polymer is hazardous because it is extremely slippery on any walking surface. The polymer feed areas have been designed to contain spilled polymers. However, do not walk

on any wet surface in the polymer feed areas since there is always the possibility that polymer will be present. Firm footing and handholds should be maintained at all times.

Clean up spills immediately and post the area until the floor is dry. Polymer can be cleaned up with dirt, sodium hypochlorite, or polymer solvent. Water and soap does not work well for cleaning polymer.

8.10.4 Miscellaneous Items

When working on any piece of equipment, in place, keep the working area as orderly as possible. Keep safety barriers and rails in place when possible. When a safety barrier must be removed to permit access to a piece of equipment, caution should be used when outside of the barrier and be sure to replace the barrier when you are finished with the job.

8.10.4.1 Confined Spaces

Prior to entering a confined space, which has contained sewage, it should be thoroughly hosed down with clean water, any sludge pumped out, or otherwise removed and properly ventilated. The operator should not enter it alone, but should be attached to a lifeline attended above by another operator. If adequate ventilation and fresh air circulation cannot be provided, self-contained breathing equipment should be used. If this is not possible, an oxygen meter and explosive gas meter should be lowered into the confined space. These two meters should be kept in the work area while workers are present. Should either meter register a hazardous condition, do not enter the area until proper ventilation has been provided. If either meter registers a hazardous condition after work has begun, all of the workers should leave the work area until proper ventilation can be provided.

8.10.4.2 Uncovered Water-Filled Structures

Operator should always use extreme caution when working near uncovered water-filled structures. Most tanks or basins in a treatment plant that fall into this category are provided with protective barriers, i.e., hand rails, etc., to prevent someone from accidentally falling into the tank. Openings are provided in the railing to give access to the tanks; these should be used. Do not climb over or through the rails, this practice invites a fall. When the job is complete, reclose the opening in the barrier, and make sure it is secured.

8.10.4.3 Routine Operations

No job is so important nor is speed or completion that critical that safety procedures should be ignored. Your carelessness can involve not only your own safety, but that of others. Follow safety regulations, use prescribed safety procedures, and above all else, think before you act. In addition, the following precautions should be observed.

1. Wear safety boots or shoes with nonskid soles.
2. Watch your footing when working on wet surfaces.
3. Keep all hoses and tools picked up and properly stored.

4. Keep the guards on all machinery during operation.
5. Walk – DO NOT RUN – down the stairs; use the handrail.
6. Keep your hands and tools away from moving equipment.
7. Before starting, stopping, or operating any of the equipment in the treatment plant, think about what hazards are created by these actions and what needs to be done to prevent these hazards from having an effect on the safe operation of the equipment.

8.11 MAINTENANCE

The GBT/BFP and associated equipment are designed to give a long service life. However, no piece of equipment can live up to performance expectations without an adequate preventative maintenance program.

The service life and efficiency of mechanical and hydraulic components are greatly affected by the oxidation and/or contamination of their lubricants. For this reason, lubrication schedules provided by the manufacturer should be adhered to. When adding lubricants, always use clean, uncontaminated stocks from properly stored, closed containers of the type prescribed in the manufacturer's lubricant schedule.

The manufacturer's O&M manuals for the GBT/BFP and the appurtenant equipment present the information required to implement a successful preventative maintenance program. The procedures and maintenance schedules recommended by the manufacturer's publications must be followed to maintain complete warranty coverage of the GBT/BFP and ancillary equipment.

Plant staff has a preventative maintenance program in place. This program should be updated with appropriate detailed information from the manufacturer's O&M manuals. Further revisions to the maintenance programs should be made based on plant staff operation and maintenance experience.

Deuel Vocational Institution

New Wastewater Treatment Plant

O&M Manual
Plant Utility Systems

TABLE OF CONTENTS

Page No.

Chapter 9 9-1

9.1 GENERAL PROCESS DESCRIPTION 9-1
9.2 DESIGN CRITERIA 9-2
9.3 COMPONENT/EQUIPMENT LISTINGS 9-3
9.4 PROCESS CONTROL DESCRIPTION 9-5
9.4.1 Potable and Nonpotable Water (1W and 2W) Systems 9-5
9.4.2 Plant Water (3W) System 9-5
9.4.3 Plant Air System 9-10
9.4.4 Electrical Power Distribution System 9-12
9.4.5 Standby Power System 9-16
9.4.6 Natural Gas Supply 9-18
9.4.7 Ventilation System 9-18
9.5 NORMAL OPERATION PROCEDURES 9-20
9.5.1 Potable and Nonpotable Water (1W and 2W) Systems 9-20
9.5.2 Plant Water (3W) System 9-21
9.5.3 Plant Air System 9-21
9.5.4 Electrical Distribution System 9-21
9.5.5 Standby Power System 9-21
9.5.6 Natural Gas System 9-21
9.6 EMERGENCY OPERATION PROCEDURES 9-21
9.6.1 Power Outage 9-22
9.6.2 Equipment Malfunctions 9-22
9.6.3 Broken Water Line 9-22
9.6.4 Backflow Preventer Not Functioning 9-22
9.6.5 Equipment Not Restarting After Emergency Power Startup or Electrical Transient 9-22
9.6.6 Natural Gas Leak 9-23
9.7 STARTUP/SHUTDOWN PROCEDURES 9-23
9.7.1 Potable and Nonpotable Water (1W and 2W) Systems 9-23
9.7.2 Plant Water (3W) System 9-23
9.7.3 Plant Air System 9-24
9.7.4 Electrical Distribution System 9-25
9.7.5 Natural Gas System 9-25
9.8 ALARM CONDITIONS 9-26
9.8.1 Operational Strategies 9-26
9.9 SAFETY 9-29
9.10 MAINTENANCE 9-32

Deuel Vocational Institution

New Wastewater Treatment Plant

O&M Manual
Plant Utility Systems

TABLE OF CONTENTS
(Continued)

Page No.

LIST OF TABLES

Table 9.1 Utility Systems Design Criteria 9-2
Table 9.2 Component/Equipment Listings 9-3

LIST OF FIGURES

Figure 9.1 Layout of Yard Piping Network 9-6
Figure 9.2 Plant Water (3W) System Plan View and Section 9-7
Figure 9.3 Single Line Diagram and Elevation Switchgear 'SG-1' 9-14
Figure 9.4 Operations/Maintenance Building HVAC Plan and Sections 9-19

LIST OF PHOTOS

Photo 9.1 3W Pump Station 9-9
Photo 9.2 Hydropneumatic Tank 9-11
Photo 9.3 Air Compressor 9-13
Photo 9.4 Switchgear 'SG-1' 9-15
Photo 9.5 Standby Generator 9-17

PLANT UTILITY SYSTEMS

9.1 GENERAL PROCESS DESCRIPTION

The plant utility systems are critical for daily operation and maintenance of the Deuel Vocational Institution (DVI) New Wastewater Treatment Plant (WWTP). While not directly related to the wastewater treatment process, the plant utility systems are responsible for assuring proper treatment and adherence to effluent quality standards. The utility systems described in this chapter are the potable and nonpotable water (1W and 2W) systems, the plant water (3W) system, the electrical power distribution system including standby power, and the natural gas distribution system.

Potable and nonpotable water (1W and 2W) are utilized throughout the plant for various applications. 1W is used in the Operations/Maintenance Building for general potable water and laboratory uses. 1W is also distributed through the plant where needed, specifically for sinks and safety eyewash/showers at the Sludge Handling Building. 2W is used for polymer solution make-up water and a backup water source for the plant water pumps.

1W and 2W are supplied by the water tower located onsite of DVI. The water tower supplies water under pressure to a piping distribution network which covers the entire prison and WWTP. The systems are separated downstream by a backflow preventer to mitigate the potential for potable water contamination within the distribution network.

The plant water (3W) is also utilized throughout the plant for various purposes. Most of the 3W use is in spray nozzles; however, it is also used for seal water and wash down of outdoor process areas.

3W is pumped from the effluent standpipe through the 3W Pump Station. These pumps supply plant water under pressure to a supply loop that surrounds the plant. The system includes a hydropneumatic tank for the control of water hammer and low flow conditions.

The electrical power for the DVI WWTP is supplied by California Department of Corrections and Rehabilitation's (CDCR) own substation at 12,000 volts (12kV). Power is supplied from the high voltage line down the access road to the WWTP through an underground ductbank on the west edge of the plant to the 12kV switches and protective relays. Power is transformed through two transformers that step the voltage from 12.5 kV down to 480 volts for distribution throughout the plant. The 480-volt switchgear connected to the transformer distributes the power to Motor Control Centers (MCCs) located in the various process areas of the plant.

The plant has a standby generator capable of running the entire plant at full capacity in the event that utility power is interrupted. The generator (11-ENG-110), located in the electrical building, supplies the loads fed from the switchgear (SG1).

Natural gas is supplied by Pacific Gas and Electric (PG&E). The gas service is buried along the plant access road and supplies the meter located on the southern end of the Operations Building. From the utility meter, natural gas is distributed through the plant, primarily for the purposes of building heat and laboratory use.

This chapter describes the general process and operation of equipment associated with the utility systems. It covers the purpose, theory of operation, and general equipment descriptions. Detailed information for specific equipment is presented in the Table 9.1. Component Descriptions are provided later in the chapter.

9.2 DESIGN CRITERIA

The design criteria for the utility systems are presented in Table 9.1.

Table 9.1 Utility Systems Design Criteria
DVI New Wastewater Treatment Plant
California Department of Corrections and Rehabilitation

Description	Units	Value
Plant (3W) Water System		
Type	ANSI Horizontal Centrifugal	
Drive Type	VFDs	
Number	--	2 + 1 Standby
Capacity (each)	gpm	280 @ 208 feet TDH
Hydropneumatic Tank		
Type	Bladder	
Number	--	1
Diameter	FT	5
Capacity	GAL	1,000
Pressure Range	PSI	65-100
Plant Air Compressor		
Type	Reciprocating, Two stage	
Number	--	2
Capacity	SCFM	60
Pressure Operating Range	PSIG	75 to 100
Motor Size	hp	7.5
Electrical Power Distribution System		
Transformer No. 1 Capacity	kVA	1
Standby Power Distribution System		
Type	Internal Combustion	
Capacity	kW	1,250

Table 9.1 Utility Systems Design Criteria DVI New Wastewater Treatment Plant California Department of Corrections and Rehabilitation		
Description	**Units**	**Value**
Natural Gas Distribution System		
Maximum Theoretical Demand	btu/hr	xxxx

9.3 COMPONENT/EQUIPMENT LISTINGS

The following is a listing of the major components and equipment items, including the function and purpose of each, for the plant utilities.

Table 9.2 Component/Equipment Listings
DVI New Wastewater Treatment Plant
California Department of Corrections and Rehabilitation

Name	Tag No(s).	Qty.	Characteristics	Function/Purpose
Plant Water (3W) Pumps No. 1, 2, and 3	09-PMP-110 09-PMP-120 09-PMP-130	3	7.5-hp, 278 gpm @ 208 feet TDH, Horizontal Centrifugal pumps manufactured by Flowserve Corporation	Pumps Plant Water from Standpipe to 3W Dist. System
Plant Water Pressure Transmitter	09-PIT-101	1		Output used to control pump operation
Hydropneumatic Tank	09-TNK-101	1	1,000-gallon, bladder-type hydropneumatic tank	Provides Storage and Pressure Control for 3W System
Plant Air Compressor	10-ARC-001	1	7.5-hp, 60 scfm, reciprocating compressor	Provides compressed air for use in the plant
Substation		1	12kV Switchgear	Electrical Power Metering and Protection Relays
Transformer TP1		1		Transforms Power from 12kV to 480V
Transformer TP2		1		Transforms Power from 12kV to 480V
Switchboard				Distributes Power to MCC-P1, MCC-P2 (spare), MCC-P3 ,and MCC-P4
Standby Generator	11-ENG-110	1	1,000-kilowatt, internal combustion engine manufactured by Caterpillar	Provides Standby Power

Table 9.2 Component/Equipment Listings DVI New Wastewater Treatment Plant California Department of Corrections and Rehabilitation				
Name	**Tag No(s).**	**Qty.**	**Characteristics**	**Function/Purpose**
Main Fuel Storage Tank	11-TNK-100	1	2,000-gallon storage tank	Provides bulk storage of standby generator fuel
Generator Fuel Day Tank	11-TNK-105	1	115-gallons	Provides standby generator fuel storage between the generator and the main fuel storage tank
Automatic Transfer Switch	11-ATS-200	1		Switches Power between Standby Generator and Utility
Operations Building Lavatory Exhaust Fans	01-EF-001	1	751 cfm, Centrifugal Sidewall Exhauster	Provides ventilation to the operations building lavatory
Operations Building Lavatory Exhaust Fans	01-EF-004	1	623 cfm, Centrifugal In-line Cabinet Fan	Provides ventilation to the operations building lavatory
Operations Building Air Handling Unit	01-AHU-001	1		
Maintenance Room Supply and Exhaust Fans	01-SF-002 01-EF-003	2	751 cfm, Sidewall Propeller Fan	Provides ventilation to the maintenance building
Maintenance Room Unit Heater	01-UH-002	1		

9.4 PROCESS CONTROL DESCRIPTION

This section presents a detailed description of the equipment and appurtenant components that comprise the plant utility systems.

9.4.1 Potable and Nonpotable Water (1W and 2W) Systems

The potable (1W) and nonpotable (2W) water systems are distribution networks throughout the plant. 1W is supplied in locations where high quality, uncontaminated water is required, including the Operations/Maintenance Building, washbasins, toilets, and emergency eyewash/shower stations. 2W is supplied to locations where high quality water is required, and a potential for contamination is present. Figure 9.1 shows the layout of the 1W, 2W, and 3W piping networks.

The 1W and 2W systems are supplied by the water tower located south of the plant. Since the 2W system is utilized in many applications where contamination is probable, including pump seal water applications and wash down hose bibs within process buildings, it is important to maintain the backflow preventer in proper working order.

9.4.2 Plant Water (3W) System

The plant water (3W) system provides minimal chlorinated tertiary effluent through a plant distribution network for various uses throughout the facility. 3W service is for uses that do not require potable water quality, including foam control sprays, belt filter press, and outdoor wash down hose bibs.

The 3W Pump Station is supplied by the tertiary treated water from the standpipe. The standpipe is fitted with a six-inch 2W feed line in the event that the membranes are down for maintenance. In these instances, the 2W feed line should be open and the feed valve from the membranes should be closed. Figure 9.2 shows the layout and section of the 3W Pump Station.

The 3W discharge header is fitted with a chlorine injection point and a duplex basket strainer. The chlorine will help minimize growth in the pipelines and the strainer will remove large particles that may have accumulated in the standpipe, which could clog nozzles or contribute to buildup within the 3W distribution system. The header pressure on each side of the duplex basket strainer is measured with a differential pressure gauge, connected to the supervisory control and data acquisition (SCADA) system. When the differential pressure across the strainer exceeds a preset limit (operator selectable at the operator interface system (OIS)), an alarm is annunciated at the OIS. This means the strainer basket is filling with material, and needs to be cleaned. The flow should be routed through the other basket while the clogged basket is cleaned.

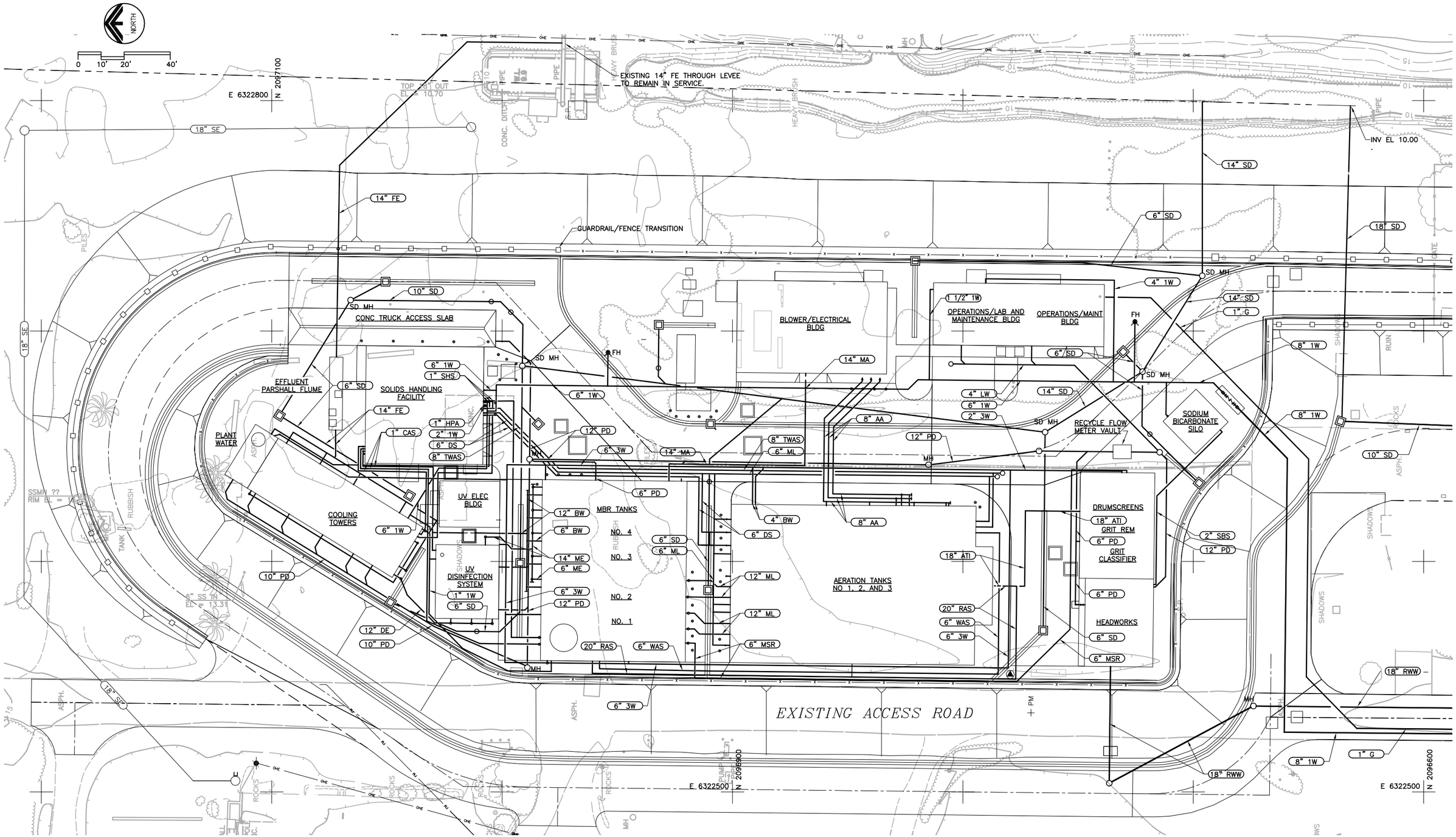

A YARD PIPING LAYOUT

Figure No. 9.1

LAYOUT OF YARD PIPING NETWORK
DEUEL VOCATIONAL INSTITUTION (DVI) NEW WWTP

CALIFORNIA DEPARTMENT OF CORRECTIONS AND REHABILITATION

carollo
Engineers...Working Wonders With Water ™

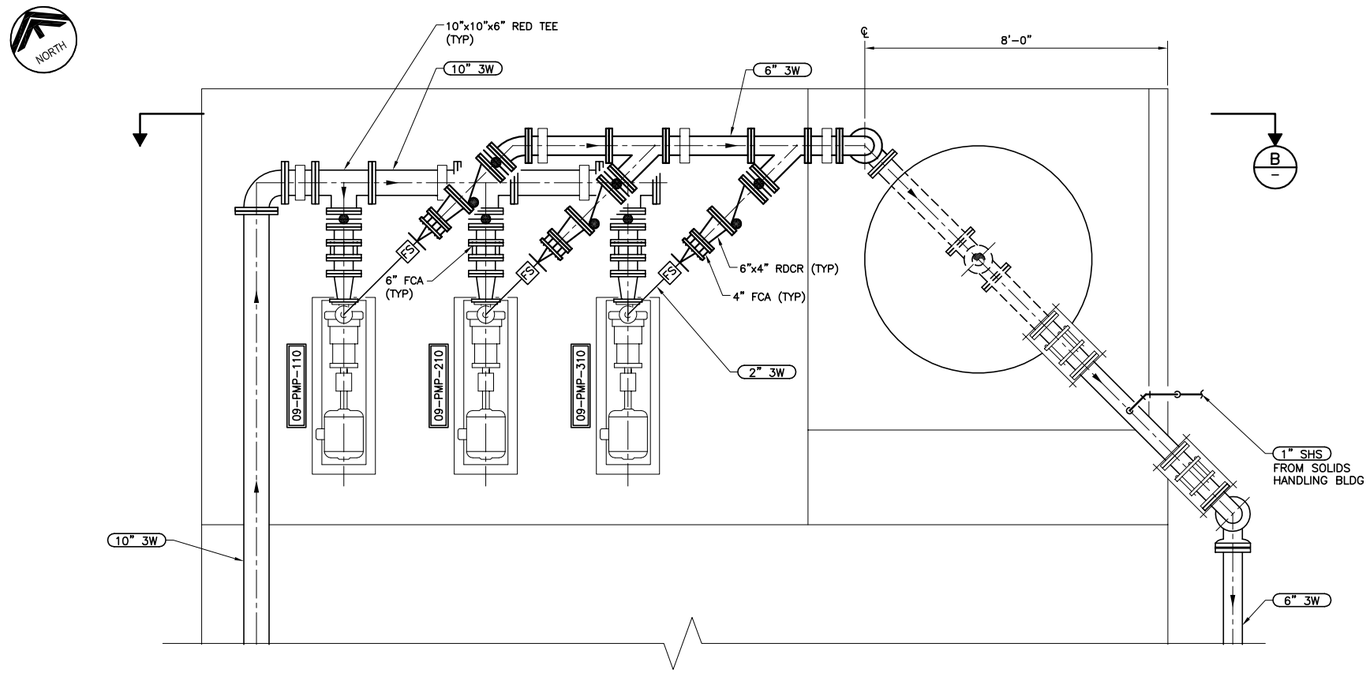

A PLAN – PLANT WATER SYSTEM

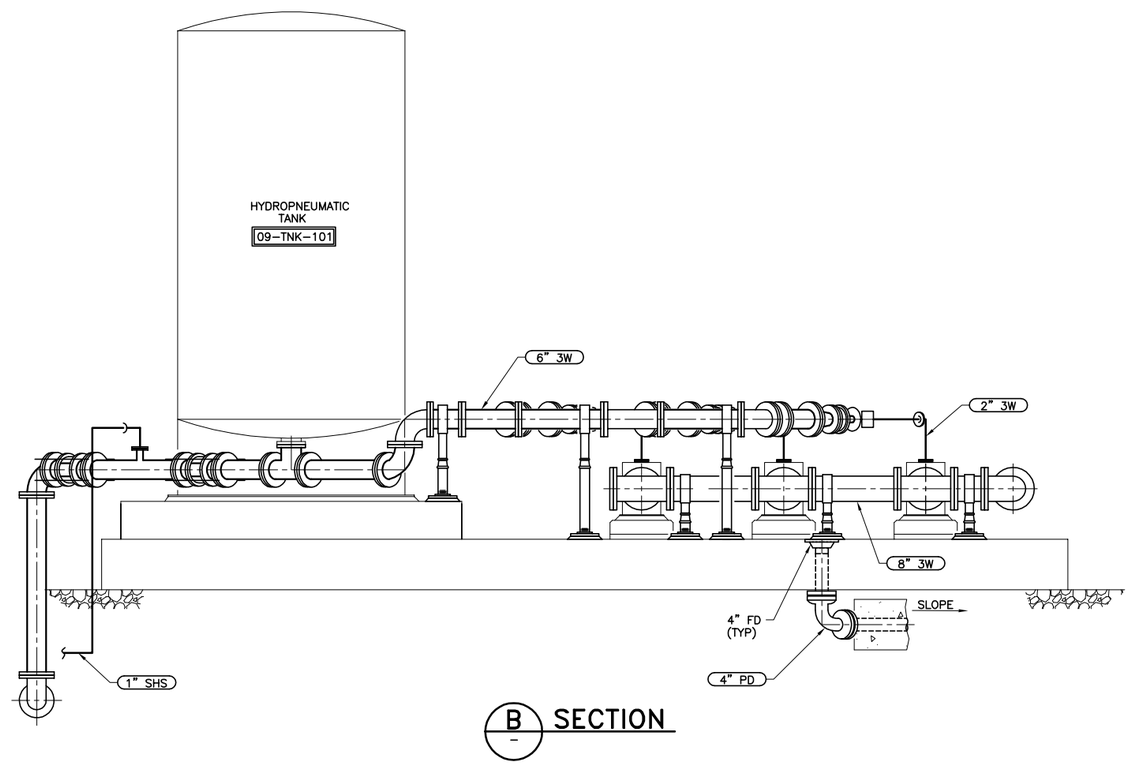

B SECTION

Figure No. 9.2

PLANT WATER (3W) SYSTEM PLAN VIEW AND SECTION

DEUEL VOCATIONAL INSTITUTION (DVI) NEW WWTP

CALIFORNIA DEPARTMENT OF CORRECTIONS AND REHABILITATION

carollo

Engineers...Working Wonders With Water ™

9.4.2.1 Plant Water Pumps

The 3W Pump Station consists of three 7.5-hp, horizontal centrifugal type pumps (09-PMP-110, 09-PMP-210, and 09-PMP-310) on variable frequency drives (VFD). Two of the pumps are duty while the third is standby. Each pump has been designed to operate at a capacity of 278 gallons per minute (gpm) at a Total Dynamic Head (TDH) of 208 feet. The pumps share a common discharge header. Located on the header is a pressure transmitter (09-PIT-101) used for the control loop that runs the pumps to maintain a pre-selected set pressure. With the pressure reading from the transmitter, the control loop utilizes a programmable logic controller (PLC) to operate the three pumps. The pumps operate in a lead/lag/lag-lag configuration. Photo 9.1 shows the 3W Pump Station.

9.4.2.2 Plant Water Pump Controls

Each plant water pump (08-PMP-110, 08-PMP-120, and 08-PMP-130) has START/LOCKOUT/STOP/RESET pushbuttons and LOCAL-OFF-REMOTE (L-O-R) selector switch at MCC-P4, which is located east of the Ultraviolet (UV) Disinfection System in the UV Electrical Building. Also located at the MCC-P4 is the VFD for each pump, which consists of a manual speed potentiometer that can be used to locally adjust the speed of the pump.

1. With the L-O-R selector switch at MCC-P4 in the **LOCAL** position, the plant water pump is controlled manually by the operator using the **START/STOP** pushbuttons and **SPEED** potentiometer.
2. With the L-O-R selector switch at MCC-P4 in the **OFF** position, the plant water pump is prohibited from running.
3. With the L-O-R selector switch at MCC-P4 in the **REMOTE** position, the plant water pump is controlled through the PLC:
    a. With the HAND-OFF-AUTO selector switch at the pop-up window in the **HAND** position, the selected plant water pump is controlled manually by the operator using the **START/STOP** selector and entering a percent **SPEED**.
    b. With the HAND-OFF-AUTO selector switch at the pop-up window in the **OFF** position, the selected plant water is prohibited from running.
    c. With the HAND-OFF-AUTO selector switch at the pop-up window in the **AUTO** position, the selected plant water pump is controlled by the PLC.

Normal operation for the plant water pumps is REMOTE-AUTO control mode. In REMOTE-AUTO control mode, the plant water pump operation is controlled by the logic resident in the SCADA system PLC. The PLC receives a 4-20 milliampere (mA) signal from the discharge pressure header transmitter (08-PIT-101) and utilizes an algorithm to maintain an operator adjustable pressure setpoint (initially set at 85 pounds per square inch (psi)) by controlling the lead and lag pumps (on/off and speed control). The VFD of the operating pump(s) shall transmit a 4-20 mA signal, which is proportional to pump speed. The PLC shall utilize the pump speed signal to determine if the pump should operate at low speed

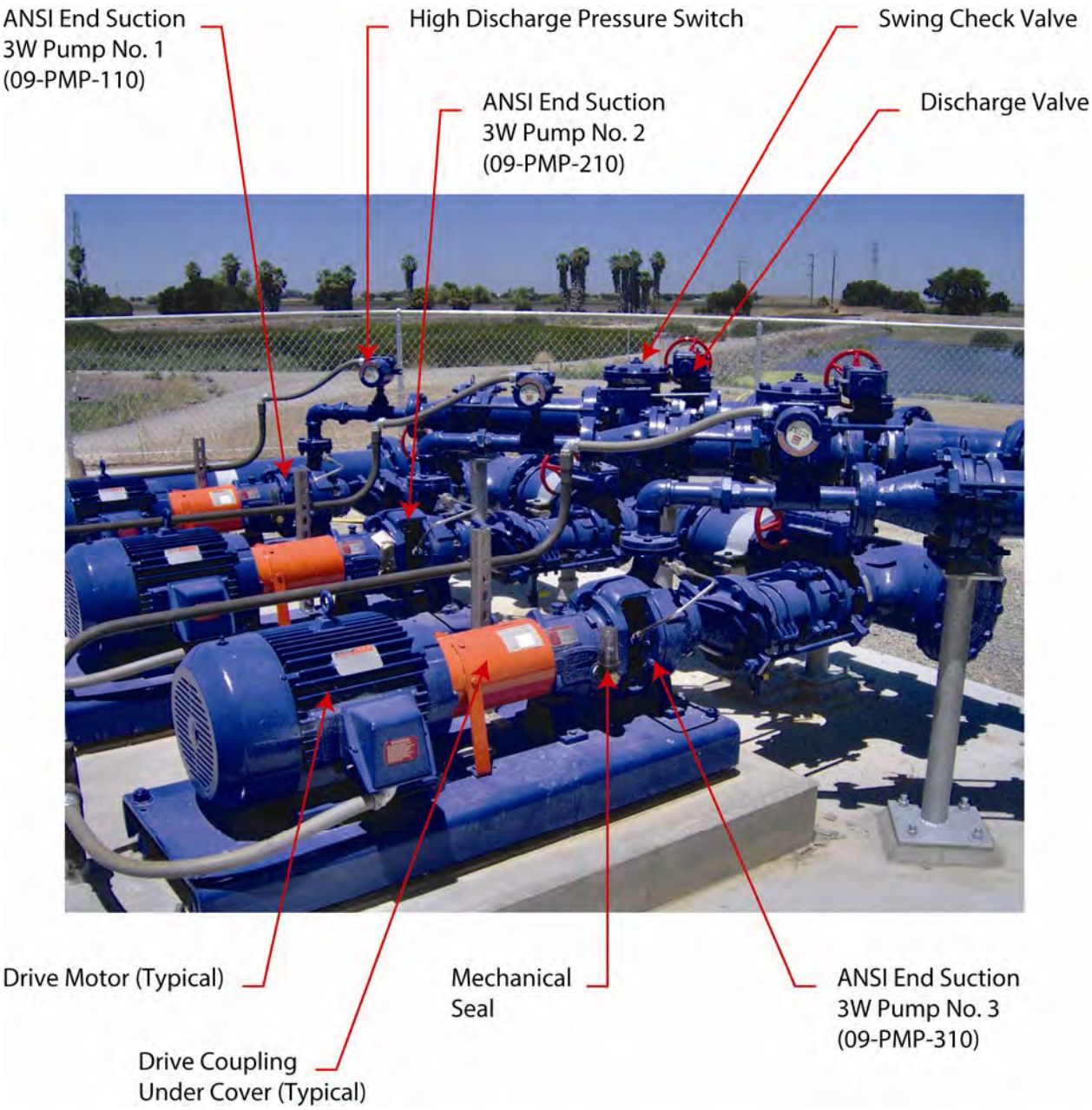

3W Pump Station

PHOTO 9.1

California Department of Corrections
and Rehabilitation
Deuel Vocational Institution Wastewater Treatment Plant
Operations and Maintenance Manual

carollo
Engineers...Working Wonders With Water®

H:\Client\CDC SAC\6927\6927R11 - DVI - DD and CD Phase\O&M Manual\O&MManualPhotos\WordFiles\PhotoNo9.1.doc

(initially set at 50 percent) or high speed (initially set at 100 percent).

When the discharge header pressure increases above the pressure setpoint for more than an adjustable time delay (initially set at 20 seconds), the lead pump shall start at a low speed to maintain the pressure setpoint. If the level increases and remains above the pressure setpoint continuously for more than an adjustable time delay with the lead pump running at maximum speed, the lead pump shall ramp down to 60 percent and the second pump (i.e., lag pump) shall start at the same speed. Both pumps increase speed together to maintain the pressure setpoint.

With two pumps running, if the pressure decreases and remains below the pressure setpoint continuously for more than the adjustable time delay with the pumps running at 50 percent, the lead pump shall stop, and the lag pump shall ramp up to 95 percent of maximum speed. The pumps will modulate to maintain the pressure setpoint.

If the PLC attempts to run a pump and does not receive a PUMP ON signal within an adjustable time (initially set to 10 seconds), the PLC shall lock out the pump and initiate a FAIL TO START alarm. The pump shall remain locked out until RESET selection has been made. The start sequence will then be shifted to the next available pump (i.e., from LEAD to LAG or LAG to STANDBY).

Each pump is supplied with a MOTOR HIGH TEMPERATURE switch, HIGH VIBRATION switch, and HIGH DISCHARGE switch. If any one of these switches is activated, the pump will stop and an alarm is displayed at the OIS. When a VFD failure is detected, the pump shuts down and a VFD FAIL alarm is annunciated at the OIS. The OIS also displays the pump RUNNING status.

9.4.2.3 Hydropneumatic Tank

A 1,000-gallon, bladder-type hydropneumatic tank (09-TNK-101) is connected to the 3W distribution header; refer to Figure 9.2. This tank provides some protection against system water hammer as pumps are started and stopped. The tank also provides a source of water during a low flow condition, where the plant water pumps cannot meet those flow requirements. The valve to the hydropneumatic tank should remain open at all times unless the tank is taken down for maintenance. Photo 9.2 shows the Hydropneumatic Tank.

9.4.3 Plant Air System

The plant air system provides process air through a plant distribution network for various uses throughout the facility.

Hydropneumatic Tank

PHOTO 9.2

California Department of Corrections
and Rehabilitation
Deuel Vocational Institution Wastewater Treatment Plant
Operations and Maintenance Manual

carollo
Engineers...Working Wonders With Water®

9.4.3.1 Plant Air Compressor

The air compressor system consists of a two 7.5-hp compressor units (10-ARC-001) mounted on a 200-gallon air receiver tank. A photo of the Air Compressor is shown in Photo 9.3. It provides compressed plant air to the wastewater treatment facility. The compressor is a two-stage, reciprocating type with rated capacity of 60 standard cubic feet per minute (scfm) at 100 pounds per square inch, gauge (psig). Air is filtered by the filter unit before entering the compressor.

9.4.3.1.1 *Plant Air System Controls*

Normal operation of the air compressor is AUTO control. In AUTO, the air compressor is operated as the LEAD/LAG compressor, but during normal operating conditions, the LEAD compressor will be sufficient to supply air throughout the facility. The LEAD compressor shall start when the receiver tank pressure drops to 80 psig and stop when the receiver tank pressure reaches 100 psig. The LAG compressor shall start when the receiver tank pressure drops to 75 psig and stop when the receiver tank pressure reaches 95 psig. If the pressure in the receiver tank falls below this setpoint, an alarm is generated and displayed at the SCADA system.

9.4.4 Electrical Power Distribution System

Almost all of the equipment at the DVI New WWTP relies on electrical power. Proper tertiary effluent treatment is directly related to the need for a continuous electrical power supply. Electrical power is purchased from the PG&E grid at 12,000 volts (12kV), and stepped down to 480 volts through CDCR transformers and switchgear for plant utilization. Power is networked throughout the plant via underground concrete duct banks. In the event of a utility power outage, the standby generator will supply power to all essential plant functions. Figure 9.3 shows the plant power distribution one-line schematic. Photo 9.4 shows Switchgear ‘SB1.’

1. Undervoltage (Device 27)
2. Overvoltage (Device 59)
3. Under/Overcurrent (Device 50/51)
4. Residual Ground (Device 51G)
5. Ground Fault (Device 59G)
6. Current Phase Imbalance (Device 46)
7. Synchronism Check (Device 25)
8. Directional Power (Device 32)
9. Over/Under Frequency (Device 81O/U)

Air Compressor

PHOTO 9.3

California Department of Corrections
and Rehabilitation
Deuel Vocational Institution Wastewater Treatment Plant
Operations and Maintenance Manual

carollo
Engineers...Working Wonders With Water®

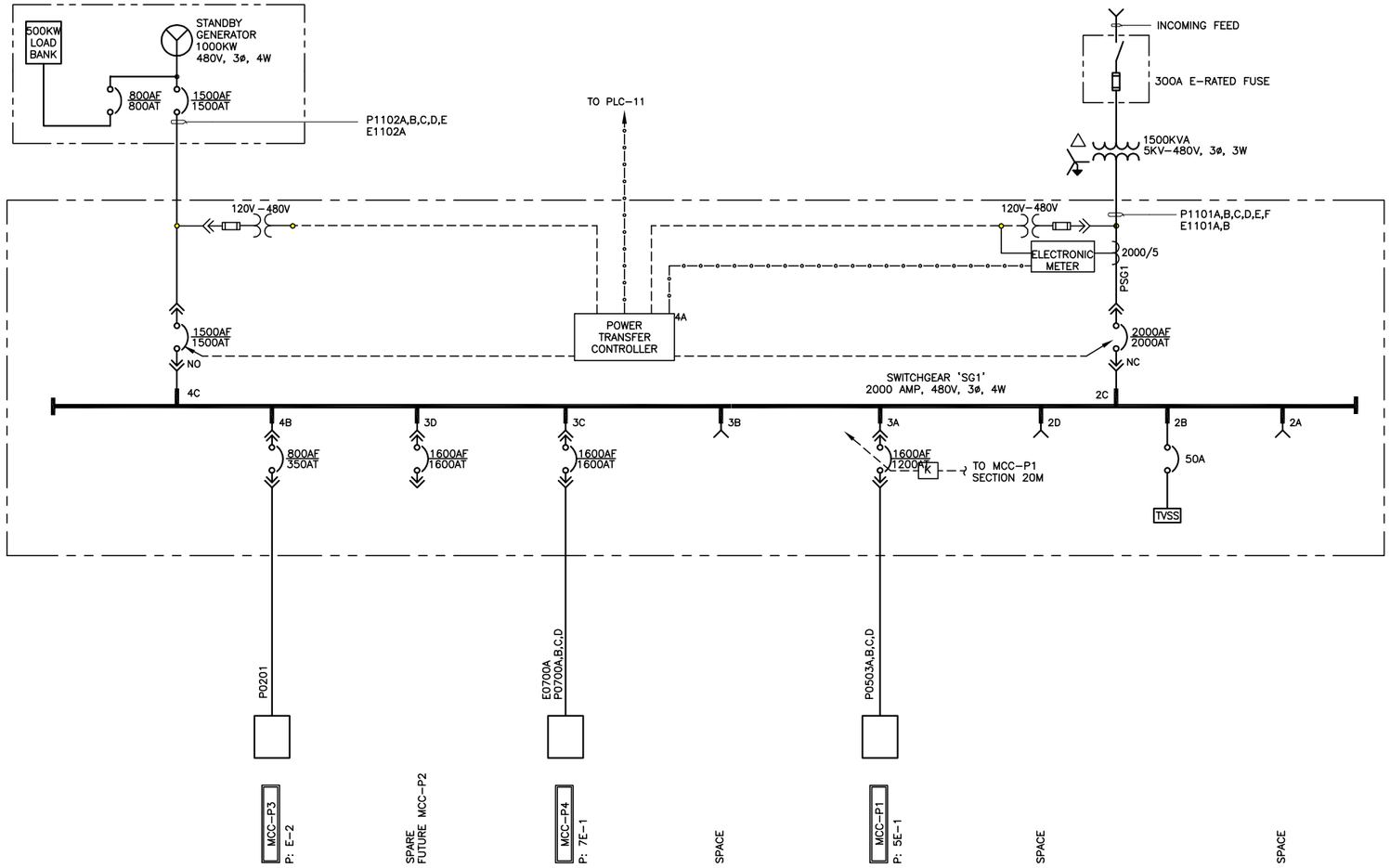

A SINGLE LINE DIAGRAM – SWITCHGEAR 'SG1'
SCALE: NTS
FILE:

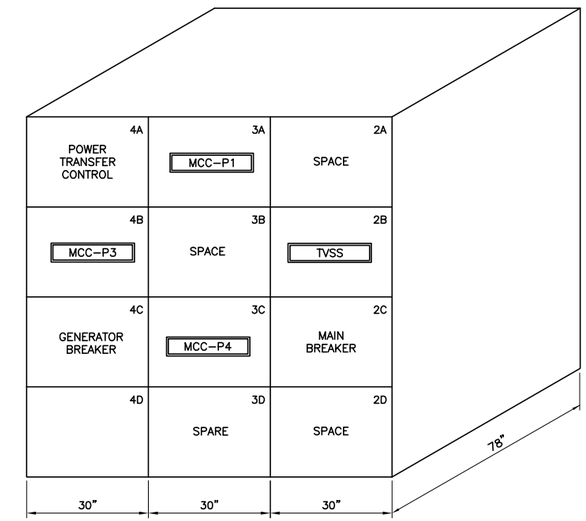

B ELEVATION – SWITCHGEAR 'SG1'
SCALE: NTS
FILE:

Figure No. 9.3

SINGLE LINE DIAGRAM AND AND ELEVATION SWITCHGEAR 'SG1'
DEUEL VOCATIONAL INSTITUTION (DVI) NEW WWTP
CALIFORNIA DEPARTMENT OF CORRECTIONS AND REHABILITATION

carollo
Engineers...Working Wonders With Water ™

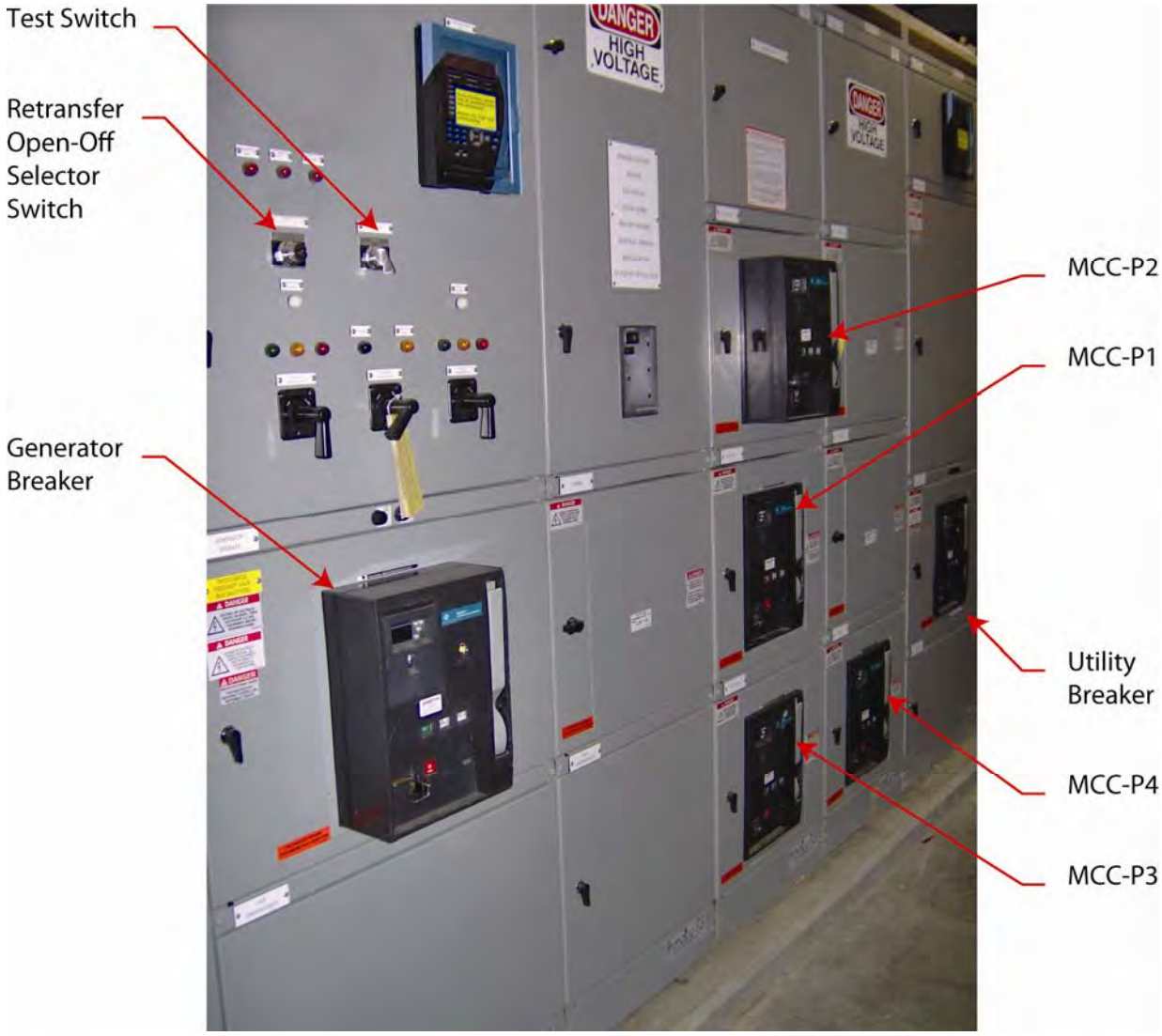

Switchgear 'SG-1'

PHOTO 9.4

California Department of Corrections
and Rehabilitation
Deuel Vocational Institution Wastewater Treatment Plant
Operations and Maintenance Manual

carollo
Engineers...Working Wonders With Water®

H:\Client\CDC SAC\6927\6927R11 - DVI - DD and CD Phase\O&M Manual\O&MManualPhotos\WordFiles\PhotoNo9.4.doc

An adjustable time delay in the breaker controls how long one of these conditions must be present before the breaker trips open. The local alarm display will indicate which condition caused the breaker to trip.

9.4.5 Standby Power System

The standby power system is provided to power the entire DVI New WWTP to ensure that treatment can continue in the event of a power failure.

9.4.5.1 Standby Generator

Standby power is provided by a generator (11-ENG-110) located adjacent to the Electrical/Blower Building. The standby generator is capable of delivering 1,250 kilowatts (kW) at 480 volts, 3-phase, 60 hertz during a power failure. The generator is mounted on a frame and set on a concrete pad. The standby power system consists of a diesel fueled engine and generator, a fuel storage tank mounted above ground, a battery charger system, and related equipment to allow the unit to operate automatically in the event of a power failure. The engine is a turbo-charged intercooled diesel unit. Photo 9.5 shows the Standby Generator.l

9.4.5.1.1 *Standby Generator Controls*

During a power failure, the engine generator automatically senses a power outage of more than three seconds and starts the engine. When the generator comes up to 90 percent of the voltage, the load circuits are disconnected from the main line and transferred to the standby generator. Upon the return of power, after an adjustable time delay of 2 to 25 minutes, the load is transferred back; and, after load is transferred and another fixed time delay of 5 minutes has elapsed, stops the engine generator. The purpose of the first adjustable time delay before transferring load is to override initial voltage fluctuation for the returning power and provide a predetermined minimum operating time for emergency power. The five-minute time delay before shutdown allows time for the engine to cool by running unloaded.

9.4.5.2 Main Fuel Storage Tank

The main diesel storage tank (11-TNK-100) has a working volume of approximately 2,000 gallons. The tank is located outside in a spill containment area (diked area) under a metal roof.

9.4.5.3 Day Tank Package

The diesel day tank has a working volume of approximately 115 gallons. The tank is located next to the standby generator in the Generator Building.

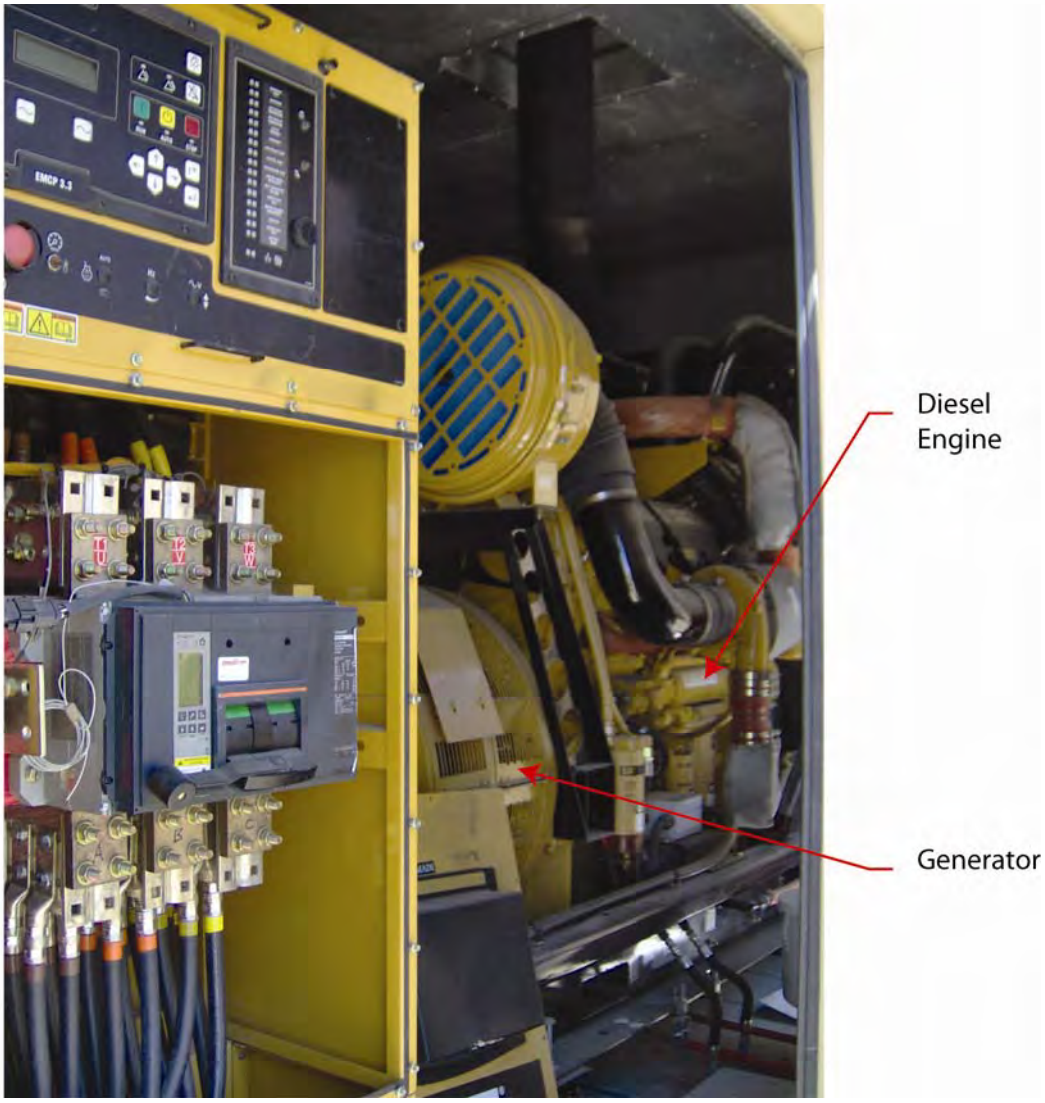

Standby Generator

PHOTO 9.5

California Department of Corrections
and Rehabilitation
Deuel Vocational Institution Wastewater Treatment Plant
Operations and Maintenance Manual

carollo
Engineers...Working Wonders With Water®

The generator day tank package system controls the operation of the fuel supply to the engine generator including the fuel delivered to the day tank (11-TNK-105) from the main fuel storage tank (11-TNK-100). When the level in the day tank reaches a low level, the supply pump is started. When the level in the day tank reaches a high level, the return pump is started. Upon low low level in the primary storage tank, an alarm will be generated at the SCADA system to warn that additional fuel is needed.

9.4.6 Natural Gas Supply

Natural gas is supplied to the plant through a buried PG&E line located on the east side of the plant access road. The PG&E supply line feeds a gas meter and shutoff valve located approximately at the southwest corner of the operations and maintenance (O&M) Building. This 2-1/2-inch natural gas connection supplies all of the natural gas demands within the plant, including the heaters and the laboratory needs within the O&M Building. Gas isolation valves are provided at each piece of equipment that uses natural gas; refer to Figure 9.1

9.4.7 Ventilation System

Figure 9.4 shows the layout and sections for the Operations/Maintenance Building HVAC.

9.4.7.1 Operations Building Lavatory Exhaust Fan

Ventilation in the operations building lavatory is provided by two exhaust fans (01-EF-001 and 01-EF-004). Lavatory exhaust fan 01-EF-001 has a capacity of 751 cubic feet per minute (cfm) and lavatory exhaust fan 01-EF-004 has a capacity of 623 cfm.

9.4.7.1.1 *Operation Building Lavatory Exhaust Fan Controls*

The external power source for the operations building lavatory exhaust fans originates from the lighting panel (LP-OP), which is located the Operations Building. An ON/OFF breaker is provided at LP-OP.

9.4.7.2 Operations Building Air Handling Unit

The operation of the air handling unit (01-AHU-001) is a function of the ambient conditions inside the operations building. An occupant's comfort level will dictate the degree of heating or cooling to be supplied by the system. An operating temperature of approximately 70 degrees Fahrenheit (°F) is the standard indoor operating temperature for most occupied spaces.

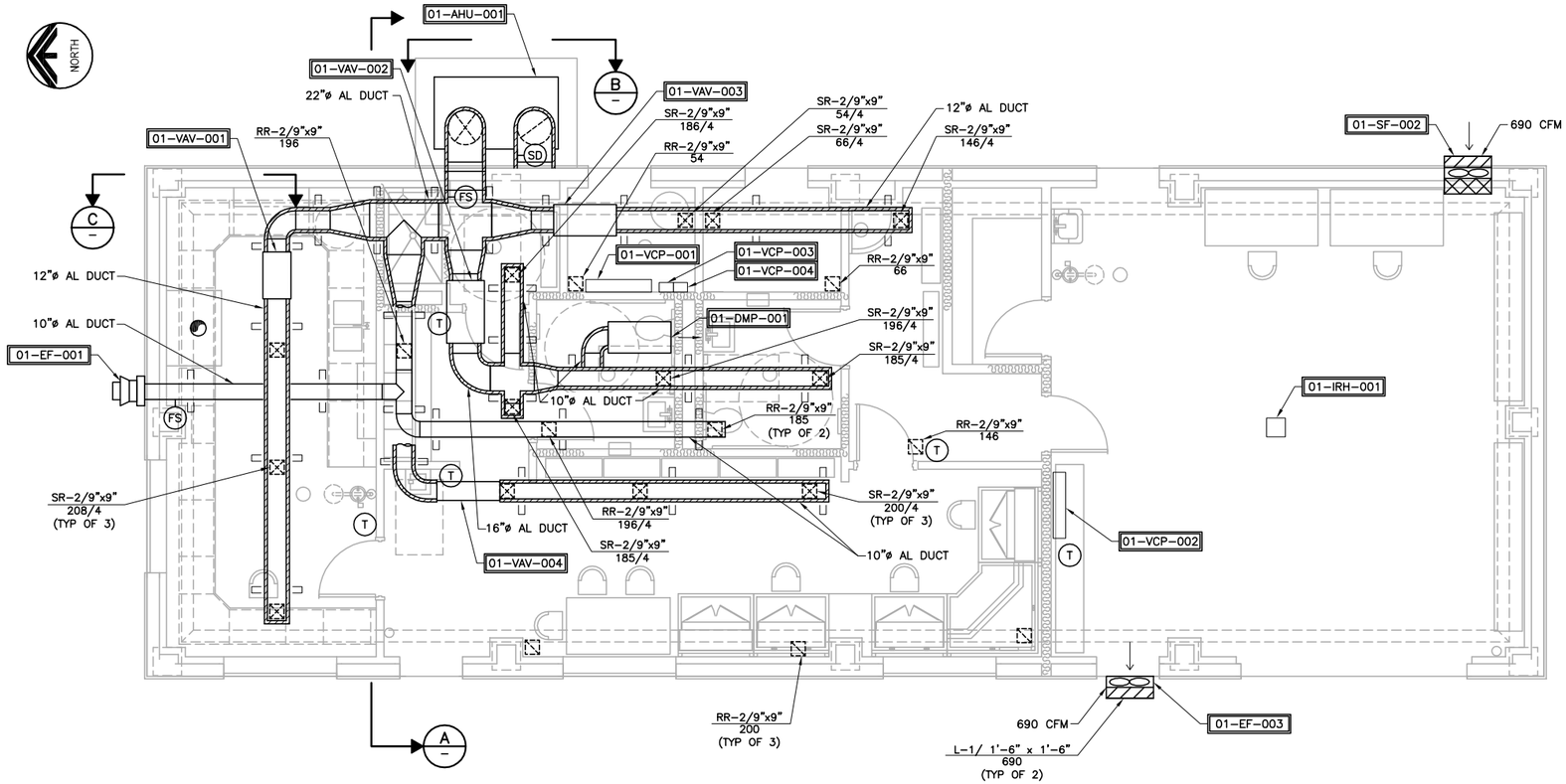

B OPERATIONS/MAINTENANCE BUILDING – HVAC PLAN

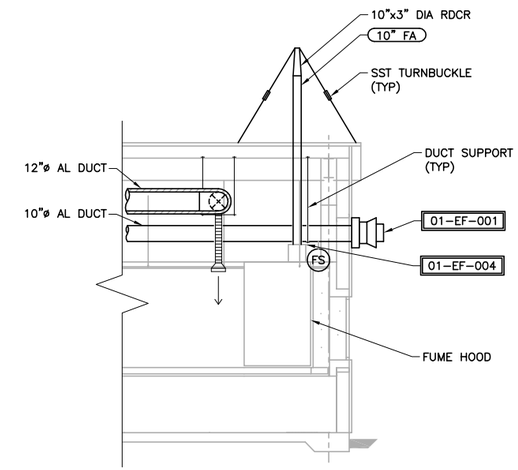

C SECTION

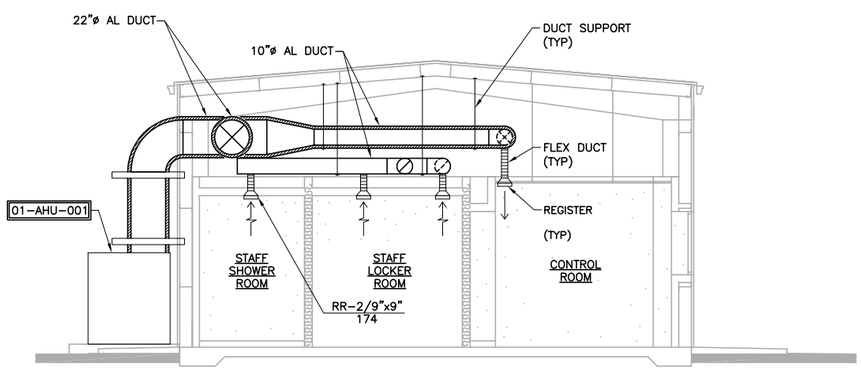

A SECTION

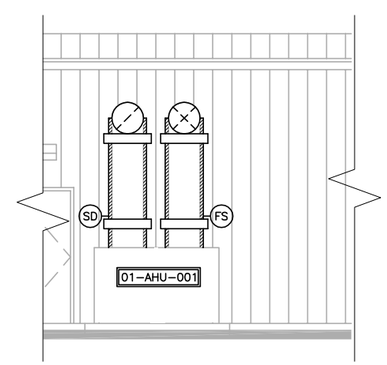

B SECTION

Figure No. 9.4

OPERATIONS/MAINTENANCE BLDG HVAC PLAN AND SECTIONS
DEUEL VOCATIONAL INSTITUTION (DVI) NEW WWTP
CALIFORNIA DEPARTMENT OF CORRECTIONS AND REHABILITATION

carollo
Engineers...Working Wonders With Water ™

9.4.7.2.1 *Operations Building Air Handling Unit Controls*

The external power source for the air handling unit (01-AHU-001) and the air handling unit VCP (01-VCP-001) originates from the distribution panel (DP-OP) and LP-OP, which are located in the Operations Building. The air handling unit may be operated automatically based on a thermostat setting, or manually by ON/OFF/AUTO switches located on 01-VCP-001. The normally occupied spaces should be operated automatically to reduce operator input.

9.4.7.3 Maintenance Room Exhaust Fan

Ventilation in the maintenance room is provided by an exhaust fan (01-EF-003). The lavatory exhaust fans each have a capacity of 690 cfm.

9.4.7.3.1 *Maintenance Room Exhaust Fan Controls*

The external power source for the maintenance room exhaust fan originates from LP-OP, which is located the operations building. An ON/OFF breaker is provided at LP-OP.

9.4.7.4 Maintenance Room Supply Fan

Ventilation in the maintenance room is provided by supply fan (01-SF-002). The lavatory exhaust fans each have a capacity of 690 cfm.

9.4.7.4.1 *Maintenance Room Exhaust Fan Controls*

The external power source for the maintenance room exhaust fran originates from LP-OP, which is located in the building. An ON/OFF breaker is provided at LP-OP.

9.5 NORMAL OPERATION PROCEDURES

This section describes the operation of the utility systems. Startup/shutdown and safety check procedures are discussed in other sections of this chapter. In addition to the information presented, the equipment manufacturer's O&M manual should be consulted for normal operating procedures and maintenance schedules.

9.5.1 Potable and Nonpotable Water (1W and 2W) Systems

1. Check the backpressure flow preventer and regulator for leakage out of the relief valves. Continuous leaking indicates a portion of the backflow preventer is not working properly.
2. Annually, have the unit tested by a certified backflow preventer technician.

9.5.2 Plant Water (3W) System

1. Check operation of pumps for excessive vibration or overheating. Check seal water for proper flow rate. Check system operating pressure setpoint and strainer differential pressure.
2. Monthly, switch pump sequence priority selection to balance run times on all pumps.

9.5.3 Plant Air System

1. Daily, perform the following air system inspection:
   a. Check for proper operation of the compressors.
   b. Check the air compressors for excessive vibration, noise, pressure, and lubrication leakage. Carefully check the motor temperature with hand.
   c. Check air filter differential pressure.
   d. Check the pressure gauges on compressors.
2. Weekly, check for equal run time on air compressors.

9.5.4 Electrical Distribution System

1. Check the main switchgear and MCC rooms for unusual noises, smoke, and relay chatter. Do not open electrical cabinets or attempt to repair electrical problems yourself. Report possible electrical problems to an electrician for further investigation.
2. Check for tripped or switched off breakers. Breakers switched off for maintenance must have a “Do Not Operate” tag posted.
3. Check the electrical monitoring equipment for alarms or other indication of possible problems.

9.5.5 Standby Power System

1. Check the standby generators for remote or automatic status.
2. Weekly, check the engines for oil, coolant, and fuel level. Verify that isolation valves are open.

9.5.6 Natural Gas System

1. Check for the proper operation of the gas meters. Verify the supply valves are either fully open or closed.
2. Check throughout the plant for leaking natural gas or improperly working equipment as indicated by the distinctive odor of natural gas.

9.6 EMERGENCY OPERATION PROCEDURES

This section describes the operation of the Utility Systems under emergency circumstances. Scenarios for different emergency conditions are given, followed by suggested corrective actions to be taken.

9.6.1 Power Outage

1. During a power outage, after an adjustable time delay, the standby generators will start. Equipment designated as critical and switched to the automatic mode of operation will automatically restart. Once restarted, the equipment will resume operation at their previous setpoints. After utility power has been restored, the equipment will once again restart if in automatic mode.

9.6.2 Equipment Malfunctions

1. Motors or pumps with excessive vibration, unusual noise, overheating, or lubrication leakage should be shutdown. The unit should not be operated until the reason for these unusual observations has been corrected.
2. Motors that shut down due to current imbalance or over current should be taken out of service immediately. Either of these types of failures indicates serious impending problems that should be investigated by an electrician prior to restarting the equipment. Shutdowns of this nature are common during electrical problems and a single attempt to restart is justified in this situation.
3. Pumps with excessive seal leakage can be operated as long as the leaking water does not travel close to electrical or instrumentation equipment. Place the affected pump on the maintenance schedule; the excessive seal leakage is a sign that the mechanical seal is wearing out.

9.6.3 Broken Water Line

1. Close the isolation valve to the section of the water distribution piping that has the broken line. PVC lines can frequently be temporarily repaired with compression fittings available from the maintenance shop or the local hardware store. Water lines supplying seal water to pumps should be repaired as soon as possible to prevent excessive wear on the seal or damage to the pumps. If seal water is to be shutdown for more than eight hours, temporary piping supplying seal water should be installed.

9.6.4 Backflow Preventer Not Functioning

1. This will normally be discovered through the annual inspection of the unit. Usually, the check valve function of the unit will still work and potable water service can be maintained. The backflow preventer is a safety device and should be repaired as soon as possible.

9.6.5 Equipment Not Restarting After Emergency Power Startup or Electrical Transient

1. Check for responsiveness of OIS and PLC. Both networks have uninterruptible power system backup and should be unaffected by electrical problems.
2. Check for automatic status of the equipment.

3. Verify equipment is considered essential and will startup automatically after electrical transients.

9.6.6 Natural Gas Leak

1. Isolate the natural gas line at the gas meter. Check the areas that use natural gas and notify all staff that the system is down. Natural gas is normally used in the laboratory and within certain buildings for heat. Contact PG&E.
2. Inspect all of the equipment that uses natural gas after the system pressure has been restored. Use caution when relighting pilot lights to prevent explosions.

9.7 STARTUP/SHUTDOWN PROCEDURES

The following is a brief description of the Utilities process startup and shutdown procedures. Refer to the equipment O&M manuals for specific information regarding lubrication and specific equipment checks.

9.7.1 Potable and Nonpotable Water (1W and 2W) Systems

9.7.1.1 <u>Startup</u>

1. Check for piping leaks and tighten flanges as required.
2. Crack open a hose bib or spray water valves to allow air to vent. Do not open the valves all the way as the transition from venting air to venting water could cause a water hammer that would break pipes.
3. When the water distribution piping approaches operating pressure, put all of the system that uses potable water back into automatic control.
4. If required, close valves that were opened for draining the system prior to repair or venting air during startup.

9.7.1.2 <u>Shutdown</u>

No specific shutdown procedures.

9.7.2 Plant Water (3W) System

9.7.2.1 <u>Startup</u>

Note: It is beneficial to isolate the hydropneumatic tanks when the plant water system is shutdown. This preserves the air pressure and shortens the startup time when the system pressure is being reestablished.

1. After the electrical connections are completed, bump the pump to verify proper rotation.
2. Remove “Do Not Operate” tags. Manually start the pump.

3. Check for piping leaks and tighten flanges as required.
4. Crack open a hose bib or spray water valve at the 3W water piping to allow air to vent. Do not open the valves all the way as the transition from venting air to venting water could cause a water hammer that would break pipes.
5. When the water distribution piping approaches operating pressure, open the isolation valves to the hydropneumatic tanks. Return the LCPs and pump to automatic and verify the proper operation of the air systems.
6. Close valves that were opened for draining the system prior to repair or venting air during the startup.

9.7.2.2 Shutdown

CAUTION: Certain plant systems, including the rotary drum screen sprayers and mechanical seals rely on an uninterrupted flow of plant water (3W). Shutting down the 3W system can cause clogging and potentially spills, and shorten the life span of certain equipment. Note that the 3W system is delivered through a pipe loop around the entire plant, and that most areas of the plant can be isolated without shutting the entire system down. Before shutting system down, discuss with Plant Superintendent alternative plans to keep unit processes and pumps operational. It is beneficial to isolate the hydropneumatic tanks when the water system is shutdown. This preserves the air pressure and shortens the startup time when the system pressure is reestablished.

1. Close the hydropneumatic tank isolation valve. Switch the LCPs to off and verify the system is not being charged with air pressure.
2. Switch the pump off. Attach a “Do Not Operate” lockout/tagout tag at the MCC.
3. If required, drain the system by opening a hose bib.
4. Complete the repair or connection to the system.

9.7.3 Plant Air System

9.7.3.1 Startup

1. Remove “Do Not Operate” tags. Manually start the compressor.
2. Check for piping leaks and tighten flanges as required.
3. Put the Comp1-Auto-Comp2 selector switch in the AUTO position.

9.7.3.2 Shutdown

1. Switch the compressor HAND-OFF-AUTO selector switch to the OFF position.
2. Attach a “Do Not Operate” lockout/tagout tag at the LCP.

9.7.4 Electrical Distribution System

9.7.4.1 Startup

Note: Startup of major electrical distribution systems should only be accomplished by qualified electricians. Prior to closing an electrical circuit, all of the equipment powered by that circuit should be shut down. After power has been restored, equipment can be restarted.

1. Verify that “Do Not Operate” tags are not locking switchgear, MCCs, or equipment out. Manually open the Standby Generator breaker at SWB-P2.
2. Manually close 480V main breaker at SWB-P2. Manually reset 12kV main breaker to utility power. After GCP-02 or automatic transfer switch senses utility power, they will go into automatic shutdown mode.
3. Verify that all plant equipment in remote-automatic has restarted and restart any equipment that requires manual intervention.

9.7.4.2 Shutdown

Shutdown of major electrical systems should only be conducted by qualified electricians. Prior to opening an electrical circuit, all of the equipment powered by that circuit should be shutdown.

9.7.5 Natural Gas System

9.7.5.1 Startup

1. Verify gas is shut off at all equipment isolation valves.
2. Open main gas valve near meter.
3. Inspect the equipment that uses natural gas after the system pressure has been restored. Specifically check the equipment in Operations/Maintenance Building. Carefully inspect around equipment after restoration of gas service for potential leaks.
4. Open equipment gas isolation valves and light pilots immediately, as appropriate (certain equipment utilizes electronic ignition - Refer to equipment O&M manuals).
5. Use caution when relighting pilot lights to prevent explosions.

9.7.5.2 Shutdown

1. Check for the required gas usage in the O&M Building and verify that they can be shutdown.
2. Shut main gas valve at gas meter.
3. Shut all individual equipment gas isolation valves at each piece of equipment.

9.8 ALARM CONDITIONS

This section describes alarm conditions that can occur during operation of the utility systems. The alarms are provided for operational surveillance of the equipment, alerting operators to alarm conditions in progress and alarm conditions that have been reset. Alarm conditions are annunciated either at the OIS, located in the control room, and/or at the LCPs.

9.8.1 Operational Strategies

When an alarm occurs, the Operator acknowledges the alarm at the LCP or OIS and examines the process condition on the OIS, LCP, or MCC and takes corrective action, if possible. The operator then proceeds to the equipment or area originating the alarm (assuming that it is a safe location). At the equipment that originated the alarm, the operator assesses the problem and determines the corrective actions required. The established safety procedures are to be observed during all operations, including operation under emergency conditions.

The following sections contain descriptions of each alarm, its indication, possible causes, and suggested response actions. The alarms listed here do not include any of the "intuitive" alarms created within the PLC. "Intuitive" alarms include those, which signal the failure of a PLC resident command. This section details actual process and instrumentation condition alarms incorporated in the design of the facility. Any subsequent modifications should be noted and addressed in this section of the O&M manual. Any alarms, which are added to the control system, should also be added to this chapter at the time of the addition to the system.

9.8.1.1 Potable and Nonpotable Water (1W and 2W) Systems

There are no alarms associated with this system.

9.8.1.2 Plant Water (3W) System

9.8.1.2.1 *Hydropneumatic Tank Low Water Level*

Indication: Low Water Level Alarm indicated at the OIS.

Action:

1. Acknowledge the alarm at the OIS.
2. Look for a broken water line. If required, isolate the hydropneumatic tanks and shutdown the plant water pump(s).
3. Check for the operation of the plant water pump(s).
4. Check for the proper operation of the hydropneumatic tanks and pump controls, including level probe.

5. Check for the proper operation of the air pressure release valve.

9.8.1.2.2 *3W Pump Fail Alarm*

Indication: 3W Pump No. 1, 2, or 3 failure is indicated at the OIS.

Action:

1. Acknowledge the alarm at the OIS.
2. Check pump and VFDs for each pumps for proper operation and motor overload.
3. Check discharge and suction valves for proper alignment.
4. Attempt to restart pump once. If pump again fails, lock out pump and switch to other pump as lead.

9.8.1.2.3 *3W Strainer Differential Pressure High Alarm*

Indication: 3W strainer high differential pressure is indicated at the OIS.

Action:

1. Acknowledge the alarm at the OIS.
2. Change strainer flow path to opposite basket. Verify that alarm clears.
3. Clean affected strainer basket and place back in service.
4. If alarm does not clear when flow is directed through clean basket, investigate for proper operation of differential pressure meter (clogged pressure lines, meter failure, etc.) Refer to instrument O&M manual.

9.8.1.2.4 *3W Pump Seal Water Fail Alarm*

Indication: A seal water low flow alarm is indicated at the OIS.

Action:

1. Acknowledge the alarm at the OIS.
2. Verify seal water flow.
3. Check flow switch for proper operation.
4. Reset the pump, check seal water flow rate and pressure.

9.8.1.3 Plant Air System

9.8.1.3.1 *Air Compressor High and Low Pressure Alarms*

Indication: High and Low pressure alarms are indicated at the SCADA system.

Action:

1. Acknowledge the alarm at the OIS system.
2. Check the operation of the air compressor and air pressure transmitter.
3. Check air leak, discharge valve.
4. Check for connection to plant air.
5. If the problem is not corrected, refer to the manufacturer's O&M manual.

9.8.1.4 Standby Power System

9.8.1.4.1 *Standby Generator Main Fuel Tank Low Level Alarm*

Indication: A low level alarm is displayed at the OIS for the Standby Generator Fuel Tank.

Action:

1. Acknowledge the alarm at the OIS.
2. Verify that tank level is low with dipstick.
3. Order additional fuel delivery as soon as possible.
4. If monitoring device is providing errant alarms, consult instrument O&M manual.

9.8.1.4.2 *Standby Generator Main Fuel Tank Leak Alarm*

Indication: A leak alarm is displayed at the OIS for the Standby Generator Fuel Tank.

Action:

1. Acknowledge the alarm at the OIS.
2. Investigate alarm in field. Leak alarm identifies leaks between inner and outer shell of fuel tank. Pull drain plug to verify that leakage has occurred. If no leakage, investigate sensor and instrument/transmitter.
3. If leakage has occurred, contact Tank Manufacturer (in equipment O&M manual) for service/potential warranty claim.

9.8.1.4.3 *Standby Generator Day Tank Low Level Alarm*

Indication: A low level alarm is displayed at the OIS for the Standby Generator Day Tank.

Action:

1. Acknowledge the alarm at the OIS.
2. Check day tank supply pump for proper operation.
3. Order additional fuel delivery as soon as possible.

4. If monitoring device is providing errant alarms, consult instrument O&M manual.

9.8.1.4.4 *Standby Generator Day Tank Leak Alarm*

Indication: A leak alarm is displayed at the OIS for the Standby Generator Day Tank.

Action:

1. Acknowledge the alarm at OIS.
2. Investigate alarm in field. Leak alarm identifies leaks between inner and outer shell of fuel tank. Pull drain plug to verify that leakage has occurred. If no leakage, investigate sensor and instrument/transmitter.
3. If leakage has occurred, contact Tank Manufacturer (in equipment O&M manual) for service/potential warranty claim.

9.8.1.5 Natural Gas System

There are no alarms associated with this system. However, a leak in the natural gas system would be evident by the smell in the air and failure alarms by the other components that require natural gas.

9.9 SAFETY

These safety instructions are provided as general guidelines only for operation of the plant utility systems. They are not intended to supersede or supplant existing plant safety instructions and procedures.

Always lockout any equipment before servicing or repairing. Notify other Operators of any unit malfunctions and that you intend to repair equipment. Follow established safety procedures before and during the work.

Use caution working around natural gas. Isolate any leaks immediately and contact the gas company for assistance.

A keyed mechanical interlock system has been provided on some electrical equipment to insure that certain electrical switches can only be operated in a special order. This prevents the Operator from operating switches, which are not designed to be operated under a load condition. It also prevents the Operator from switching an energized bus on to another energized bus. The mechanical interlock is a locking system made up of one key and two or more bolt locks. The Operator must first open the electric switch which contains the key to release the key, then the key can be removed and used to operate another identical lock(s) which will allow another electrical switch to be operated. There are several keyed interlock systems throughout the plant. Each has a key unique to that set of locks.

Operating personnel are protected during normal operating duties from contact with electricity by the modern enclosed electrical control system furnished with the plant. The

control system will remain safe if properly maintained and all doors, covers, and panel sides are kept securely closed.

Electrical shock hazards are present any time maintenance work is done on electrical drives or inside of electrical control panels. Hazards are also present when using electrically driven hand tools.

Electricity kills by paralyzing the nervous system and stopping muscular action. Frequently, electricity may hit the breathing center at the base of the brain and interrupt the transmission of nervous impulses to the muscles responsible for breathing. In other cases, the electric current directly affects the heart, causing it to cease pumping blood. Death follows from lack of oxygen in the body.

Two conditions are necessary to be involved in an electrical accident. The body must be connected to a source of electrical energy and must be grounded so that the energy passes through the body on its way to the ground.

The best way to prevent contact with electricity is to de-energize all controls and equipment before commencing work. Each circuit is provided with a LOCKOUT-STOP pushbutton at the field control station and a locking device on the motor control panel circuit breaker to lock it in the open position. The line side of the circuit breaker will not be de-energized unless the entire panel bus is de-energized; therefore, when working inside a MCC compartment, care must be taken not to touch the terminals on the line side of the circuit breaker. All de-energized circuits should be tested with a voltmeter to determine if the circuit breakers or line switches have functioned properly before commencing electrical work.

There is NEVER a necessity to perform electrical maintenance on hot or energized circuits and this should NOT be done in any circumstance. With proper planning, it is possible to remove any unit from service while maintenance work is performed. A good preventive maintenance program on the plant electrical system will prevent expensive and time consuming repairs to damaged equipment.

It should be emphasized that all repairs, additions, and modifications to the electrical system be done in accordance with the National Electric Code. The temptation to make temporary installations should not be allowed to occur because these temporary installations tend to become permanent and expose operating personnel to unwarranted hazards.

The other primary source of electrical hazard to operating personnel is from malfunction of electrically powered hand tools. All hand tools furnished within the plant and all service receptacles are grounded. Also, all extension cords are three-wired with grounded fittings. Operating personnel should inspect all hand tools and extension cords for signs of wear each time they are used. In no case should two-wire extension cords or ungrounded electrically powered hand tools be used.

The Operator should also make certain that his body is not grounded while using these tools. Common grounding hazards are standing in water or a wet area, or coming in contact with metal, such as piping or structure supports, while drilling or grinding.

Metal grounding hazards can be insulated by rubber blankets designed for this purpose.

Good housekeeping around the MCCs and electrical drives is essential to prevent accidents; access to all control cubicles is essential. Always perform electrical service work in a comfortable position with adequate working space. Serious injury can result from the involuntary reaction to a minor shock while working in an awkward position.

A lockout switch is located near each motor to provide complete circuit isolation of the motor drive from the electrical energizing source. All electrical maintenance and repair is performed by fully qualified personnel, in accordance with the National Electrical Code and local codes. Special safety procedures to be observed when maintaining or repairing electrical equipment are as follows:

1. Ensure that solid ground connections are maintained in all systems.
2. Do not subject control circuit to more than 120 volts.
3. Press and latch local lockout/stop pushbutton when shutting down a drive motor for minor inspection or emergency.
4. Lockout tags shall be used on main circuit switches for all equipment out of service for either electrical or mechanical maintenance. The same tags with chain and padlock shall be used on valves during repair or inspection when hazard to life or equipment exists. Padlocks with lockout tags attached are in each of the MCCs. The following precautions shall be observed when work is being performed on electrically powered equipment:
    a. A person starting work on such equipment shall lock out the unit and keep the key. If a second person starts work on the same equipment, the procedure is repeated; i.e., the second person shall lock out the unit and keep the key.
    b. After each person has completed the allotted task, the appropriate lockout tag is removed.
    c. Only the person working on the equipment shall unlock and remove the lockout tag from the unit. When an individual completes a task, the key may be passed to another authorized person. The only deviation allowed from this rule is when an employee with the key is not available and it is imperative to operate the equipment. In this case, the Plant Superintendent shall investigate and determine if the unit can or should be started; if so, he will unlock the switch with a master key. Master keys are kept by the Plant Superintendent.
    d. All locks and keys are labeled and must be returned to their proper location.
5. <u>DO NOT SMOKE</u> or allow any source of ignition in rooms with batteries. Charging releases hydrogen gas, which is explosive. Make sure ventilation is on at all times.

9.10 MAINTENANCE

The plant should update any current maintenance procedures with the appropriate detailed information from the manufacturer's O&M manuals. Further revisions to the maintenance programs should be made based on operation and maintenance experience.

In general the following applies:

Before the wet weather season arrives, service the major electrical equipment with trained electricians. De-energize each compartment and panel. Clean out the dust in the cubicle, and perform the following:

1. Inspect for evidence of corrosion, overheating, sparking, arcing, and chafed or loose wiring. Replace severely burned or pitted contacts.
2. Manually actuate contactor to verify movements are free from any mechanical binding.
3. Verify that pushbuttons work properly.
4. Check that plug in relays are firmly seated and that printed circuit cards are pushed fully in place.
5. Conduct motor insulation tests (1,000-volt "megger") on all of the 460-volt motors from the load side of the starter contactors and log results. Circuits reading less than 100,000 ohms or 100 times less than the previous year's reading should not be energized until readings are in excess of 1,000,000 ohms (1 meg ohm). Units with unacceptable low readings should be sectionalized at the motor terminals and other locations to determine the problem. Repair by cleaning, drying, or replacing wiring, or if in the motor, by cleaning and drying (using low voltage winding heat) in place, or removing the motor for shop cleaning and/or additional dipping and baking.