Job No. 105711C1-400

MALAGA COUNTY WATER DISTRICT

3580 SOUTH FRANK STREET – FRESNO CALIFORNIA 93725

BOARD OF DIRECTORS

CHARLES E. GARABEDIAN JR. PRESIDENT | JOHN R. LEYVA VICE-PRESIDENT | SALVADOR CERRILLO DIRECTOR | IRMA CASTANEDA DIRECTOR | FRANK SOTO DIRECTOR

RUSS HOLCOMB – GENERAL MANAGER

APR 29 2011

April 28, 2011

California Regional Water Quality Control Board
Central Valley Region
1685 "E" Street
Fresno, CA 93706-2020

Attention: Mr. Warren Gross

Subject: Malaga County Water District (MCWD)
Order No. R5-2008-0033, NPDES No. CA 0084239
Cease and Desist Order No. R5-2008-0032
Technical Report on Short Term Improvements

Dear Mr. Gross:

As required, please find attached a report certifying the completion of Short Term Improvements and a workplan for remaining identified improvements, as required by Section 3.d. of the Cease and Desist Order.

Although the District does not have records of receiving comments or approval from the RWQCB on the Treatment and Disposal Capacity Study submitted July 25, 2008, the District regrets that it did not submit the required report by the deadline of March 14, 2011. This failure to submit was an oversight.

The District requests the RWQCB consider allowing an extension beyond the deadline of March, 2011 for completion of the improvements to the headworks self cleaning screen and the improvements to Clarifier No. 1. As noted in the attached report, the District is in the process of completing design documents for said improvements and has secured funds for the construction.

Please contact me if you have any questions or if you require additional information.

Sincerely,

Russ Holcomb, General Manager

Enclosure

cc: Provost & Pritchard Engineering Group, Michael Taylor
Costanzo & Associates, Neal Costanzo

MALAGA COUNTY WATER DISTRICT

Short Term Improvements Implementation Report

April 2011

Prepared for:

MCWD

Prepared by:

Provost & Pritchard Engineering Group, Inc.
Fresno, California

TABLE OF CONTENTS

1 INTRODUCTION 1
1.1 Present Flowrate 1
2 TREATMENT FACILITIES 2
2.1 Design Criteria 2
2.2 Short Term Improvements to Treatment Components 2
2.3 Headworks 2
2.4 Barminutor 3
2.5 Dissolved Air Floatation (DAF) Clarifier 3
2.6 Activated Sludge 3
2.7 Secondary Clarifiers 4
2.8 Sludge Digestion 4
2.9 Tertiary Filter 4
3 DISPOSAL FACILITIES 5
3.1 Reclamation Alternatives 5
4 SUMMARY 6
4.1 Short Term 6

APPENDIX

A	Record Drawings of Influent Flow Metering improvements and UV Disinfection Improvements
B	Plans for Self Cleaning Screen Improvements
C	Record Drawings for improvements to the DAF and Secondary Clarifier
D	Record Drawings for improvements to the Sludge Drying Bed and Instrumentation

1 INTRODUCTION

A. This report serves to summarize and certify the Short Term Improvements that have been completed at the Malaga County Water District wastewater treatment and disposal facilities to day. This report makes reference to the Study Evaluating Treatment and Disposal Facilities dated July 2008. The information serves to comply with requirements identified in Section 3.d. of the Cease and Desist Order No. R5-2008-0032 for the Malaga County Water District.

1.1 Present Flowrate

A. The Waste Discharge Requirements are intended to be applied to a facility receiving up to 1.2 mgd. The existing average monthly flowrate received by the facilities ranged from 0.61 mgd to 0.75 mgd in 2010.

B. The District has established a Moratorium on new connections until certain treatment and disposal improvements are completed and the District would be able to serve new connections while maintaining compliance with the Waste Discharge Requirements.

2 TREATMENT FACILITIES

2.1 Design Criteria

A. Specific requirements that require compliance are as follows:

- Average monthly electroconductivity (Ec) 500 μmhos/cm greater than source water, or 1,000 μmhos/cm, whichever is more stringent.
- Chloride of 175 mg/l

B. Tertiary effluent

- BOD_5 of 10 mg/l
- TSS of 10/mg/l
- Ammonia Nitrogen of 0.4 mg/l (as N) after May 19, 2010
- Boron of non-detect
- Turbidity of 2 NTU
- Total Coliform of 2.2 MPN/100 ml as a 7 day median

2.2 Short Term Improvements to Treatment Components

2.3 Headworks

A. The influent screw pumps have a capacity of 1,100 gpm each. The existing screw pumps have a capacity that is sufficient to meet existing and future demands. The existing screw pumps are in need of repair to the flights to maintain the pumping capacity. The District Board will determine a schedule for repair of the screw pump flights as a part of the budget considerations for the next fiscal year (which begins July 1, 2011).

B. The existing headworks includes a grit removal facility. There is a continuous recirculation of a portion of the wastewater that is now metered separately. The Record Drawings for the flow measurement facilities are included in Appendix A.

2.4 Barminutor

The barminutor has a capacity of 1.2 mgd. The barminutor is sufficient to meet anticipated demands through 2028. The barminutor is presently out of service. The District has determined that repair of the barminutor is not practical and it is determined that the Barminutor is no longer manufactured. The District has performed an evaluation of alternative self cleaning screens that may be installed in the headworks as a replacement for the Barminutor. The plans and specifications for the improvements are complete with the exception of electrical requirements. It is intended that the District advertise for the improvements in June, 2011 and initiate construction in June, 2011. The District has obtained financing for the construction of the improvements. A copy of the plans for the improvements are included in Appendix B.

2.5 Dissolved Air Floatation (DAF) Clarifier

The existing DAF had been out of service for several years due to the discovery of leaks from the structure that resulted in the surfacing of untreated effluent. Repairs to the DAF have been completed and the facilities are now in service. Record Drawings for the improvements are included in Appendix C.

2.6 Activated Sludge

A. The capacity of the activated sludge tanks is 1.20 mgd. The activated sludge system is dependent upon the three existing blowers that supply 1,500 of cfm to the fine bubble diffuser system. The existing tank volume, detention time, and oxygen supply are sufficient to meet the new discharge requirements for BOD and TSS until the flowrate of 1.2 mgd is reached.

B. The District performed an Ammonia Removal Treatment Feasibility Study as submitted to the RWQCB for review and comment in February, 2011. The conclusion of the study was that the facilities were sufficient for the required ammonia removal. However, the District has proceeded with long term improvements geared toward total nitrogen reduction. The District applied for funding through the CDBG program and was awarded funds to implement some improvements to the activated sludge system with the purpose of further reducing nitrogen of the effluent. The District is presently proceeding with design of said improvements. The improvements are intended to include aeration system, mixing and monitoring improvements. The District has not yet finalized plans and specifications for the improvements. The schedule identified in Agreement No. 10-644 between the County of Fresno and Malaga County Water District states that the project is to be advertised in August, 2011, awarded in October, 2011, and completed by April, 2012.

4 SUMMARY

4.1 Short Term

A. Immediate deficiencies at the treatment facilities were previously identified in the July 2008 Report. The status of short term improvement actions are as follows:

   1. Influent flow measurement – improvements completed.
   2. DAF Clarifier – improvements completed.
   3. Secondary Clarifiers – a second clarifier is now in service. The funding for the improvements for the third clarifier is in place. Design of necessary improvements are underway.
   4. Sludge Thickener – improvements completed.
   5. UV Disinfection – improvements completed.

B. The MCWD continues to pursue means to reduce electroconductvity within the influent flowrate through pretreatment requirements.

C. The facilities presently meet ammonia requirements. Although not previously identified as short term improvements, the District is designing improvements to the aeration system to enhance denitrification.

D. Disposal facilities are in critical need of expansion. A moratorium is in place for new development until disposal facilities are expanded.

APPENDIX

MALAGA COUNTY WATER DISTRICT

Short Term Improvements Implementation Report

April 2011

Prepared for:

MCWD

Prepared by:

Provost & Pritchard Engineering Group, Inc.
Fresno, California

TABLE OF CONTENTS

1 INTRODUCTION 1
1.1 Present Flowrate 1
2 TREATMENT FACILITIES 2
2.1 Design Criteria 2
2.2 Short Term Improvements to Treatment Components 2
2.3 Headworks 2
2.4 Barminutor 3
2.5 Dissolved Air Floatation (DAF) Clarifier 3
2.6 Activated Sludge 3
2.7 Secondary Clarifiers 4
2.8 Sludge Digestion 4
2.9 Tertiary Filter 4
3 DISPOSAL FACILITIES 5
3.1 Reclamation Alternatives 5
4 SUMMARY 6
4.1 Short Term 6

APPENDIX

A	Record Drawings of Influent Flow Metering improvements and UV Disinfection Improvements
B	Plans for Self Cleaning Screen Improvements
C	Record Drawings for improvements to the DAF and Secondary Clarifier
D	Record Drawings for improvements to the Sludge Drying Bed and Instrumentation

1 INTRODUCTION

A. This report serves to summarize and certify the Short Term Improvements that have been completed at the Malaga County Water District wastewater treatment and disposal facilities to day. This report makes reference to the Study Evaluating Treatment and Disposal Facilities dated July 2008. The information serves to comply with requirements identified in Section 3.d. of the Cease and Desist Order No. R5-2008-0032 for the Malaga County Water District.

1.1 Present Flowrate

A. The Waste Discharge Requirements are intended to be applied to a facility receiving up to 1.2 mgd. The existing average monthly flowrate received by the facilities ranged from 0.61 mgd to 0.75 mgd in 2010.

B. The District has established a Moratorium on new connections until certain treatment and disposal improvements are completed and the District would be able to serve new connections while maintaining compliance with the Waste Discharge Requirements.

2 TREATMENT FACILITIES

2.1 Design Criteria

A. Specific requirements that require compliance are as follows:

- Average monthly electroconductivity (Ec) 500 µmhos/cm greater than source water, or 1,000 µmhos/cm, whichever is more stringent.
- Chloride of 175 mg/l

B. Tertiary effluent

- BOD_5 of 10 mg/l
- TSS of 10/mg/l
- Ammonia Nitrogen of 0.4 mg/l (as N) after May 19, 2010
- Boron of non-detect
- Turbidity of 2 NTU
- Total Coliform of 2.2 MPN/100 ml as a 7 day median

2.2 Short Term Improvements to Treatment Components

2.3 Headworks

A. The influent screw pumps have a capacity of 1,100 gpm each. The existing screw pumps have a capacity that is sufficient to meet existing and future demands. The existing screw pumps are in need of repair to the flights to maintain the pumping capacity. The District Board will determine a schedule for repair of the screw pump flights as a part of the budget considerations for the next fiscal year (which begins July 1, 2011).

B. The existing headworks includes a grit removal facility. There is a continuous recirculation of a portion of the wastewater that is now metered separately. The Record Drawings for the flow measurement facilities are included in Appendix A.

2.4 Barminutor

The barminutor has a capacity of 1.2 mgd. The barminutor is sufficient to meet anticipated demands through 2028. The barminutor is presently out of service. The District has determined that repair of the barminutor is not practical and it is determined that the Barminutor is no longer manufactured. The District has performed an evaluation of alternative self cleaning screens that may be installed in the headworks as a replacement for the Barminutor. The plans and specifications for the improvements are complete with the exception of electrical requirements. It is intended that the District advertise for the improvements in June, 2011 and initiate construction in June, 2011. The District has obtained financing for the construction of the improvements. A copy of the plans for the improvements are included in Appendix B.

2.5 Dissolved Air Floatation (DAF) Clarifier

The existing DAF had been out of service for several years due to the discovery of leaks from the structure that resulted in the surfacing of untreated effluent. Repairs to the DAF have been completed and the facilities are now in service. Record Drawings for the improvements are included in Appendix C.

2.6 Activated Sludge

A. The capacity of the activated sludge tanks is 1.20 mgd. The activated sludge system is dependent upon the three existing blowers that supply 1,500 of cfm to the fine bubble diffuser system. The existing tank volume, detention time, and oxygen supply are sufficient to meet the new discharge requirements for BOD and TSS until the flowrate of 1.2 mgd is reached.

B. The District performed an Ammonia Removal Treatment Feasibility Study as submitted to the RWQCB for review and comment in February, 2011. The conclusion of the study was that the facilities were sufficient for the required ammonia removal. However, the District has proceeded with long term improvements geared toward total nitrogen reduction. The District applied for funding through the CDBG program and was awarded funds to implement some improvements to the activated sludge system with the purpose of further reducing nitrogen of the effluent. The District is presently proceeding with design of said improvements. The improvements are intended to include aeration system, mixing and monitoring improvements. The District has not yet finalized plans and specifications for the improvements. The schedule identified in Agreement No. 10-644 between the County of Fresno and Malaga County Water District states that the project is to be advertised in August, 2011, awarded in October, 2011, and completed by April, 2012.

2.7 Secondary Clarifiers

A. Although three (3) secondary clarifier tanks are located within the treatment facilities, only one (1) clarifier had been in operation for a sustained period of time. The District has completed improvements to a second clarifier and the facilities are in operation. The Record Drawings for the improvements are included in Appendix C. The District is now proceeding with design of the improvements necessary to allow the third clarifier to be placed into service. The schedule identified in Agreement No. 10-644 between the County of Fresno and Malaga County Water District states that the project is to be advertised in August, 2011, awarded in October, 2011, and completed by April, 2012.

2.8 Sludge Digestion

A. The existing sludge digesters have a capacity of 1.2 mgd. The operation of the sludge digesters is proceeding as required. No specific upgrades or improvements are needed at this time.

B. The sludge thickener had been in need of repair to the chain and flight mechanism. The thicknener is now in service. The improvements to the chain and flight mechanism were completed by District staff.

C. The other identified short term improvement was the lining of the third sludge drying bed. This work is complete. The Record Drawings for the improvements are included in Appendix D.

2.9 Tertiary Filter

A. The existing tertiary filter has a capacity of 0.45 mgd, which is equivalent to the existing permit for discharge. The Fresno Irrigation District (FID) has requested that the MCWD initiate actions to become independent of canal discharge. Therefore, immediate expansion of the Tertiary filter is not warranted. Previous evaluations recommended an expansion of the tertiary filtration system to at least 0.7 mgd to alleviate pressure from the disposal ponds.

B. The MCWD has completed the improvements to convert to UV disinfection. The Record Drawings for the improvements are included in Appendix A. Updates to the O&M Manual have been incorporated as appropriate.

3 DISPOSAL FACILITIES

The District contacted property owners to identify willingness of sellers for the purpose of constructing new disposal facilities. No property owners were identified as willing to sell property to the District.

The District has drained pond No.s 3, 4, and 5 in the past three years and has subsequently performed scraping and ripping measures to enhance percolation of the ponds. The District is presently draining Pond No. 1 for the purpose of scraping and ripping the bottom during the summer of 2011.

As intended, the District also adopted a moratorium on new connections until disposal facilities are expanded.

The District conducted several discussions with the City of Fresno for the potential connection of the District to the City of Fresno system. The District Board has information for review regarding the potential of connection to the City of Fresno or the construction of additional disposal facilities.

3.1 Reclamation Alternatives

A. As identified in the previous report, the District contacted PPG and Calpine to determine the willingness of selling property to the District for the purposes of reclamation. Neither company was interested in selling property to the District.

B. No company located in the District was willing to enter into an agreement for the purposes of reclamation of treated effluent.

4 SUMMARY

4.1 Short Term

A. Immediate deficiencies at the treatment facilities were previously identified in the July 2008 Report. The status of short term improvement actions are as follows:

   1. Influent flow measurement – improvements completed.
   2. DAF Clarifier – improvements completed.
   3. Secondary Clarifiers – a second clarifier is now in service. The funding for the improvements for the third clarifier is in place. Design of necessary improvements are underway.
   4. Sludge Thickener – improvements completed.
   5. UV Disinfection – improvements completed.

B. The MCWD continues to pursue means to reduce electroconductvity within the influent flowrate through pretreatment requirements.

C. The facilities presently meet ammonia requirements. Although not previously identified as short term improvements, the District is designing improvements to the aeration system to enhance denitrification.

D. Disposal facilities are in critical need of expansion. A moratorium is in place for new development until disposal facilities are expanded.

APPENDIX A

Record Drawings of Influent Flow Metering improvements and UV Disinfection Improvements

Know what's below.
Call before you dig.

MALAGA COUNTY WATER DISTRICT

FRESNO COUNTY

MALAGA WWTP MODIFICATIONS
WASTEWATER TREATMENT PLANT
UV DISINFECTION PROJECT

SMALL COMMUNITY GRANT PROJECT NO. 1002

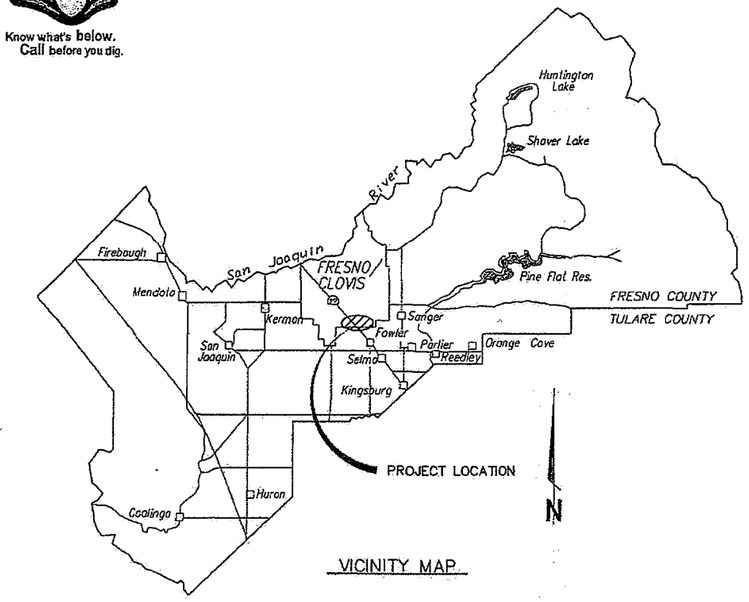

VICINITY MAP

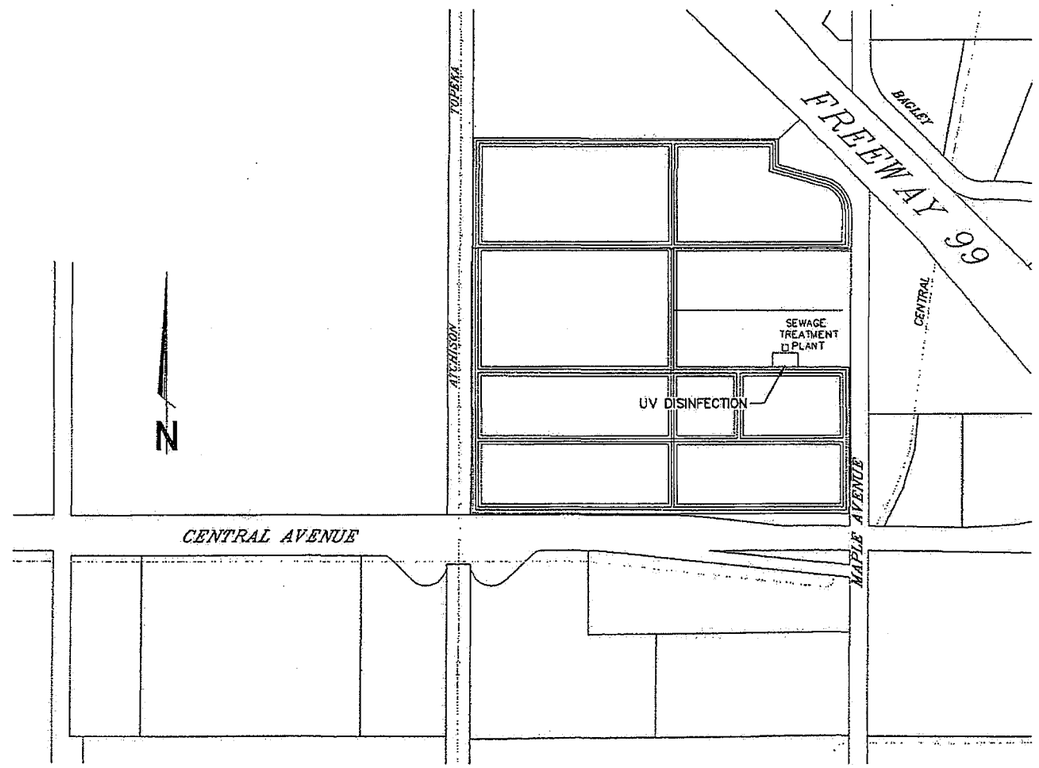

SITE MAP

GENERAL NOTES

1. Malaga CWD (559-485-7353) shall be contacted at least 48 hours prior to commencement of work on or near existing District facilities.
2. Used material, rejects, misfits, or seconds, etc. are not acceptable for use on Malaga CWD facilities.
3. All construction shall be in conformance with these plans, project specifications and Malaga CWD specifications.
4. Contractor shall field verify the horizontal and vertical locations of all existing facilities prior to commencing work. Call Underground Service Alert (USA) at 1-800-227-2600. Contractor shall make Engineer aware of any discrepancies.
5. Reinforcing shall not be encased in concrete without prior Malaga CWD] inspections. Likewise, concrete shall not be covered with earth prior to Malaga CWD inspection.
6. Concrete design mix shall be submitted to the engineer for review and approval. All concrete shall have a 28-day minimum compressive strength of 3000 psi unless otherwise specified.
7. All steel pipe and fittings shall be furnished with a shop applied high solids epoxy coating on the interior and exterior, unless otherwise indicated. All other exposed steel shall be painted with a pre-treatment primer, an undercoat and a final coat of paint in accordance with Malaga CWD specifications.
8. All nuts, bolts, and washers used to secure underground fittings shall be stainless steel. After installation, all steel hardware shall be coated with a rust preventative, wrapped with 4 mil polyethylene sheeting, and secure with PVC tape.
9. Thrust restraints to be provided at all pipeline bends, whether or not shown on the plans.
10. All construction shall be performed in accordance with applicable health and safety laws of the State of California and CAL/OSHA standards.
11. Trench backfill and reservoir embankments shall be compacted in accordance with the specifications and the geotechnical report contained in the specifications.
12. All excess material and/or debris shall be removed upon completion of installation.
13. Contractor shall be responsible for providing adequate dust control at all times.

CONSULTING ENGINEERS AND LAND SURVEYORS OF CALIFORNIA

Construction Contractor agrees that in accordance with generally accepted construction practices, construction Contractor will be required to assume sole and complete responsibility for job site conditions during the course of construction of the project, including safety of all persons and property; that this requirement shall be made to apply continuously and not be limited to normal working hours; and construction Contractor further agrees to defend, indemnify and hold design professional harmless from any and all liability, real and alleged, in connection with the performance of work on this project, excepting liability arising from the sole negligence of design professional.

SPECIAL NOTE

Where underground and surface structures are shown on the plans, the locations, depth and dimensions of structures are believed to be reasonably correct, but are not guaranteed. such structures are shown for the information of the Contractor, but information so given is not to be construed as a representation that such structures will, in all cases, be found where shown, or that they represent all of the structures which may be encountered.

SITE SAFETY AND PROTECTION NOTES

The duty of the Engineer, Owner or its agents to conduct construction review of the Contractor's performance and the undertaking of inspections or the giving of instructions as authorized herein is not intended to include review of the adequacy of the Contractor's safety measures in, on, or near the construction site and shall not be construed as supervision of the actual construction nor make the Engineer, Owner or its agents responsible for providing a safe place for the performance of work by the Contractor, subcontractors, or suppliers, or for access, visits, use, work, travel or occupancy by any person.

The Contractor shall have at the work site, copies or suitable extracts of Construction Safety Orders, issued by Cal-OSHA. He shall comply with provisions of these and all other applicable laws, ordinances and regulations. The Contractor must comply with provisions of the safety and health regulations for construction, promulgated by the Secretary of Labor under Section 107 of the Contract Work Hours and Safety Standards Act, as set forth in Title 29 C.F.R.

To protect the lives and health of his employees under the Contract, the Contractor shall comply with all pertinent provisions of the "Manual of Accident Prevention in Construction" issued by the Associated General Contractors of America, Inc., and shall maintain an accurate record of all cases of death, occupational disease, and injury requiring medical attention or causing loss of time from work, arising out of and in the course of employment or work under the Contract.

The Contractor alone shall be responsible for the safety, efficiency, and adequacy of his facilities, appliances, and methods and for any damage, which may result from their failure or their improper construction, maintenance or operation.

The Contractor agrees that it shall assume sole and complete responsibility for job site conditions during the course of construction of this project, including safety of all persons and property; that this requirement shall apply continuously and not be limited to normal working hours; and that the Contractor shall defend, indemnify and hold the Owner, Provost & Pritchard Engineering Group, Inc., and their respective agents harmless from any and all liability, real or alleged, in connection with the performance of work on this project, excepting for liability arising from the sole negligence of Owner, Engineer, or their respective agents.

The Owner and its agents' site responsibilities are limited solely to the activities of their employees on site. These responsibilities shall not be interred by any party to mean that the Owner or its agents have responsibility for site safety. Safety in, on, or about the site is the sole and exclusive responsibility of the Contractor alone. The Contractor's methods of work performance, superintendence and the Contractor's employees, and sequencing of construction are also the sole and exclusive responsibilities of the Contractor alone.

RECORD DOCUMENT
DATE 9-5-2010
THESE RECORD DOCUMENTS HAVE BEEN PREPARED IN PART, ON THE BASIS OF INFORMATION COMPILED AND FURNISHED BY OTHERS. THE ENGINEER WILL NOT BE RESPONSIBLE FOR ANY ERRORS OR OMISSIONS WHICH HAVE BEEN INCORPORATED INTO THIS DOCUMENT AS A RESULT.

APPROVALS

MALAGA COUNTY WATER DISTRICT — DATE 10-21-10

SHEET INDEX

Sheet Number	Sheet Title
1	COVER SHEET
2	LEGEND SHEET
3	PROCESS AND INSTRUMENTATION
4	DESIGN CRITERIA-HYDRAULIC PROFILE
5	LAYOUT - EXISTING
6	LAYOUT - PROPOSED
7	CHANNEL SECTION
8	CROSS SECTION
9	DETAILS
10	ELECTRICAL SITE PLAN
11	ELECTRICAL SITE PLAN
12	ELECTRICAL SINGLE LINE
13	ELECTRICAL (E) MCC-2 ELEVATION
14	ELECTRICAL BLOCK DIAGRAM
15	ELECTRICAL PLC
16	ELECTRICAL PLC

COPYRIGHT 2010 by PROVOST & PRITCHARD CONSULTING GROUP, A CALIFORNIA CORPORATION
These plans and specifications are the property of Provost & Pritchard Consulting Group, Inc. expressly reserves its common law copyright and other property rights in these plans and specifications. These plans are not to be reproduced, changed or copied in any form or manner whatsoever, nor are they to be assigned to any third party without first obtaining the written permission and consent of Provost & Pritchard Consulting Group, Inc. In the event of unauthorized reuse of these plans by a third party, the third party shall hold its client of Provost & Pritchard Consulting Group, Inc. harmless for any loss or liability. In addition, the third party shall pay to Provost & Pritchard Consulting Group, Inc. a reasonable royalty for any such reuse or reproduction.

No.	REVISION	BY	DATE

MALAGA WWTP MODIFICATIONS
WASTEWATER TREATMENT PLANT
MALAGA COUNTY WATER DISTRICT
FRESNO COUNTY
UV DISINFECTION
COVER SHEET

EST. 1968
PROVOST & PRITCHARD
ENGINEERING GROUP
An Employee Owned Company
266 WEST OBANNON AVENUE
FRESNO, CALIFORNIA 93711-6162
559/449-2700 559/449-2715 FAX
www.ppeng.com

DESIGN ENGINEER: MICHAEL TAYLOR
LICENSE NO:
DRAFTED BY: DWM
CHECKED BY:
SCALE: AS SHOWN
DATE: 2-14-2008
JOB NO: 10570502
DWG. NO:
SHEET 1 OF 16

10/8/2010 2:47 PM C:\Clients\Malaga CWD - 1057\10570502-UV Disinfection\DWG\SHEET\10570502-G1-COVER.dwg -Doug Vaughn

GENERAL ABBREVIATIONS

AC	ASPHALT CONCRETE	LT	LEFT
AG	AGGREGATE	MAX	MAXIMUM
AP	ANGLE POINT	MCC	MOTOR CONTROL CENTER
APN	ASSESSOR'S PARCEL NUMBER	MDF	MAXIMUM DAILY FLOW
BFP	BACK FLOW PREVENTOR	MH	MANHOLE
BLDG	BUILDING	MIN	MINIMUM
BLW	BLOWER (2)	NC	NORMALLY CONSOLIDATED
BM	BENCHMARK	NIC	NOT IN CONTRACT
BO	BOLLARD	NPW	NON-POTABLE WATER
BVC	BEGIN VERTICAL CURVATURE	NTS	NOT TO SCALE
BW	BACK OF WALK	OC	ON CENTER
BWD	BACKWASH WATER	OD	OUTSIDE DIAMETER
CA	CALIFORNIA	OH	OVERHEAD
CFS	CUBIC FEET PER SECOND	PROP	PROPOSED
CIP	CAST IRON PIPE	PB	PULL BOX
CIPCP	CAST-IN-PLACE CONCRETE PIPE	PC	POINT OF CURVATURE
CL	CLASS	PCC	POINT OF COMPOUND CURVATURE
℄	CENTER LINE	PE	PERMANENT EASEMENT
CMP	CORRUGATED METAL PIPE	PI	POINT OF INTERSECTION
CNS	COMPACTED NATIVE SOIL	ℙ	PROPERTY LINE
CO	SEWER CLEAN OUT	PLR	POLYMER SOLUTION
CONC	CONCRETE	PLS	POLYMER SYSTEM
CONST	CONSTRUCT/CONSTRUCTION	POC	POINT ON CURVE
COR	CORNER	POL	POINT ON LINE
CP	CONTROL POINT	POT	POINT ON TANGENT
CRA	CHLORINE RESIDUAL ANALYZER	PP	POWER POLE
CTS	CALCIUM THIOSULFATE SOLUTION	PRC	POINT OF REVERSE CURVATURE
CY	CUBIC YARDS	PSI	POUNDS PER SQUARE INCH
DA	DRIVE APPROACH	PT	POINT OF TANGENCY
DI	DROP INLET	PVC	POLY VINYL CHLORIDE
DIA, φ	DIAMETER	PVCC	POINT OF VERTICAL COMPOUND CURVATURE
DIE	DISINFECTED EFFLUENT	PVMT	PAVEMENT
DIP	DUCTILE IRON PIPE	PVRC	POINT OF VERTICAL REVERSE CURVATURE
DSM	DECHLORINATED SAMPLE	PVI	POINT OF VERTICAL INTERSECTION
DW	DRIVEWAY	R	RADIUS
DWG	DRAWING	RAS	RETURN ACTIVATED SLUDGE
EA	EACH	RC	RADIUS OF CURVE
EC	END OF CURVATURE	RCP	REINFORCED CONCRETE PIPE
ECC	ECCENTRIC	RD	RELATIVE DENSITY
EG	EXISTING GRADE	RET	RETURN
ELEC	ELECTRIC	RGRCP	RUBBER GASKETED REINFORCED CONCRETE PIPE
ELEV, EL	ELEVATION	RP	RADIUS POINT
ELL	ELBOW	RR	RAILROAD
EM	ELECTRIC METER	RT	RIGHT
EOL	END OF LINE	R/W	RIGHT OF WAY
EP	EDGE OF PAVEMENT	S=	SLOPE
ER	EFFLUENT RETURN	SCD	SCUM DRAIN
ETM	EFFLUENT TURBIDITY METER	SCP	STANDARD CONCRETE PIPE
EVC	END VERTICAL CURVATURE	SD	STORM DRAIN
EWS	EMERGENCY EYEWASH & SHOWER	SEC	SECTION
EXIST, EX.	EXISTING	SF	SQUARE FEET
FAB	FILTER AIR BACKWASH	SMP	SAMPLE PUMP
FEF	FILTERED EFFLUENT FLOWMETER	SMX	SATIC MIXER
FF	FINISHED FLOOR	SP	SERVICE POLE
FG	FINISHED GRADE	SQ	SQUARE
FH	FIRE HYDRANT	SS	STAINLESS STEEL, SANITARY SEWER
FIP	FILTER INFLUENT PUMP (2)	STA	STATION
℄	FLOW LINE	STD	STANDARD
FLU	FILTER UNIT (1)	STP	STAND PIPE
FM	FORCE MAIN	TBM	TEMPORARY BENCHMARK
FRP	FIBER REINFORCED POLYESTER PIPE	TC	TOP OF CURB
FTE	FILTERED EFFLUENT	TCE	TEMPORARY CONSTRUCTION EASEMENT
FW	FRONT OF WALK	TDI	TENSILE DUCTILE IRON
GALV	GALVANIZED	TFC	TOP FACE OF CURB
GB	GRADE BREAK	TG	TOP OF GRATE
GPD	GALLONS PER DAY	TP	TELEPHONE POLE
GPM	GALLONS PER MINUTE	TRANS	TRANSFORMER
GUY	GUY WIRE	TS	TOP OF STRUCTURE
GV	GATE VALVE, GAS VALVE	TSC	TELESCOPIC SCUM SKIMMER
HDPE	HIGH DENSITY POLYETHYLENE	TSB	TELEPHONE SPLICE BOX
HGL	HYDRAULIC GRADE LINE	TSF	THIOSULFATE FEEDER
HFS	HYPOCHLORITE FEEDER SHELTER	TST	THIOSULFATE STORAGE TANK
HORIZ	HORIZONTAL	TOW	TOP OF WALL
HP	HORSE POWER	TYP	TYPICAL
HPT	HYPOCHLORITE STORAGE TANK	UG	UNDERGROUND
HWL	HIGH WATER LEVEL	UVS	UV SENSOR
HYF	HYPOCHLORITE FEEDER	UVT	UV TRANSMITTANCE MONITOR
HYS	HYPOCHLORITE SOLUTION	VCP	VITRIFIED CLAY PIPE
ID	INSIDE DIAMETER	VERT	VERTICAL
IFF	INFLUENT FILTER FLOW	WAS	WASTE ACTIVATED SLUDGE
INV	INVERT	WL	WATER LINE
ITM	INFLUENT TURBIDITY METER	WM	WATER METER
JP	JUNCTION POLE	WS	WATER SERVICE
LC	LENGTH OF CURVE	WSE	WASTEWATER SECONDARY
LF	LINEAR FEET	WW	WASTE WATER
		WV	WATER VALVE

GENERAL SYMBOL

NEW / FUTURE / EXISTING — MAJOR PROCESS PIPING OR FLOW CHANNEL

NEW / FUTURE — SECONDARY PROCESS PIPING

WATER LEVEL

NEW / FUTURE — ELECTRICAL SIGNAL

PROCESS FLOW DIRECTIONAL ARRAOW

XX — FIELD LOCATED DEVICE (LIMIT SWITCH, TEMP, SWITCH, TRANSMITTER, ETC.)

XX / XXX — CONTROL PANEL MOUNTED INDICATOR OR INSTRUMENT (RUN LIGHT, LEVEL INDICATOR, TRANSMITTER, ETC)

OPERATOR INTERFACE DISPLAY READOUT (ALARM STATUS, CYCLE STATUS, ETC)

CONTROL PANEL, PLC

SINGLE INSTRUMENT HOUSING CONTAINING TWO (OR MORE) INSTRUMENTATION FUNCTIONS

1 — CONTROL INTERLOCK FUNCTION SEE SCHEMATICS OR SYSTEM SPECIFICATIONS FOR SPECIFIC FUNCTION

XX / XX / XX
- INSTRUMENTATION TYPE
- INSTRUMENTATION ABBREVIATION
- PROCESS SEQUENCE NUMBER

TANK — SYSTEM

X / XXX — PROCESS LINE GOING TO OR COMING FROM OTHER SHEET
- MATCH SHEET NUMBER
- MATCH LINE NUMBER

XX / XX — SIGNAL LINE GOING TO OR COMING FROM OTHER SHEET
- PROCESS SEQUENCE NUMBER
- INSTRUMENTATION ABBREVIATION

SEW-15-RCP-F — PIPING CODE
- FUTURE SYSTEM
- PIPE MATERIAL
- PIPE DIAMETER
- SYSTEM AND PIPING CODE

SEW-P-XXX-F — EQUIPMENT TAG
- FUTURE SYSTEM
- PROCESS SEQUENCE NUMBER
- FUNCTION CODE
- SYSTEM AND PIPING CODE, SEE G2

DIRECTION OF ARROW DENOTES INPUT (I) OR OUTPUT (O)

COLOR OF ARROW DENOTES ANALOG (A) OR DISCRETE (D)

DO DI AO AI

CALL-OUTS

N / Y-2 — DETAIL OR SECTION IDENTIFICATION

N / TYP — DETAIL OR SECTION IS TAKEN ON THE SAME SHEET

N / — DETAIL OR SECTION MAY BE TAKEN ON SEVERAL DIFFERENT SHEETS.

DETAIL OR SECTION IS TAKEN ON THE DRAWING INDICATED

1 / TYP — DRAWING CROSS REFERENCING

INSTRUMENTATION

AAH		ANALYZER ALARM HIGH
AAL		ANALYZER ALARM LOW
AE		ANALYZER ELEMENT
AIT		ANALYZER INDICATOR AND TRANSMITTER
ASH		ANALYZER SWITCH HIGH
ASL		ANALYZER SWITCH LOW
AT		ANALYZER TRANSMITTER
BC		BATCH CONTROLLER
FE		FLOW ELEMENT
FIT		FLOW INDICATOR AND TRANSMITTER
FT		FLOW TRANSMITTER
HA		HAND ALARM
HS		HAND SWITCH
	LR	LOCAL-REMOTE
	HOA	HAND-OFF-AUTO
	OC	OPEN-CLOSE
	OCR	OPEN-CLOSE-REMOTE
	OO	ON-OFF
	OOA	ON-OFF-AUTO
LDIT		LEVEL DIFFERENCE INDICATOR AND TRANSMITTER
LE		LEVEL ELEMENT
LIT		LEVEL INDICATOR AND TRANSMITTER
LS		LEVEL SWITCH
LSH		LEVEL SWITCH HIGH
LSHH		LEVEL SWITCH HIGH/HIGH
LSLL		LEVEL SWITCH LOW LOW
LSM		LEVEL SWITCH MID-RANGE
MC		MANUAL CONTROLLER
MS		MOISTURE SENSOR
OCS		OIL CONTAMINATION SENSOR
PE		PRESSURE ELEMENT
PI		PRESSURE INDICATOR
PSH		PRESSURE SWITCH HIGH
PSHH		PRESSURE SWITCH HIGH HIGH
PSV		PRESSURE SAFETY VALVE
SC		SPEED CONTROL
SIT		SPEED INDICATOR AND TRANSMITTER
TI		TEMPERATURE INDICATOR
TSH		TEMPERATURE SWITCH HIGH
TSL		TEMPERATURE SWITCH LOW
VS		VARIABLE SPEED
YA		STATUS ALARM
	LAHH	LEVEL ALARM HIGH/HIGH
	LALL	LEVEL ALARM LOW/LOW
	PAH	PRESSURE ALARM HIGH
	PAL	PRESSURE ALARM LOW
	TAH	TEMPERATURE ALARM HIGH
YR		STATUS INDICATE RUN
YIS		STATUS INDICATE STOP
YL		STATUS LIGHT
YS		STATUS STOP
ZA		POSITION ALARM
ZAC		POSITION ALARM CLOSE
ZAO		POSITION ALARM OPEN
ZC		POSITION CONTROL
ZI		POSITION INDICATE CONTROL
ZIC		POSITION INDICATOR CLOSE
ZIO		POSITION INDICATOR OPEN
ZSC		POSITION SWITCH CLOSE
ZSO		POSITION SWITCH OPEN

PROCESS SEQUENCE NUMBER

FILTERED WATER	200-299
DISINFECTION	300-399
DRAIN	520-539
ELECTRICAL AND I&C SYSTEMS	700-799

FLOW METERS, VALVES AND FITTINGS

FLOW METER, PROPELLER TYPE
VALVE, BALL
VALVE, BUTTERFLY
VALVE, PLUG
VALVE, GATE
VALVE, THREE WAY
VALVE, BACKFLOW PREVENTER
VALVE, CHECK
FLANGE
PULSATION DAMPER
MOTOR
REDUCER
CLEAN OUT
COMPOSITE AUTO-SAMPLER
CHECK BALL VALVE
TELESCOPIC SCUM SKIMMER
MOTORIZED CONTROL VALVE
REDUCER
STATIC MIXER
PUMP
WATER LEVEL
GLOBE VALVE

811 Know what's below. Call before you dig.

COPYRIGHT 2008 by PROVOST & PRITCHARD ENGINEERING GROUP, INC. ALL RIGHTS RESERVED
The firm of Provost & Pritchard Engineering Group, Inc. retains all ownership and property rights in these plans, specifications, and other contract documents. These documents shall not be reproduced, changed, or copied in any form or manner whatsoever, nor are they to be assigned to a third party without first obtaining the expressed written consent of Provost & Pritchard Engineering Group, Inc. In the event of unauthorized reuse of these plans by a third party, the third party shall hold Provost & Pritchard Engineering Group, Inc. harmless, and shall indemnify Provost & Pritchard Engineering Group, Inc. for any liability or legal fees associated with defending and enforcing these rights.

No.	REVISION	BY	DATE

RECORD DOCUMENT
DATE 9-5-2010
THESE RECORD DOCUMENTS HAVE BEEN PREPARED IN PART, ON THE BASIS OF INFORMATION COMPILED AND FURNISHED BY OTHERS. THE ENGINEER WILL NOT BE RESPONSIBLE FOR ANY ERRORS OR OMISSIONS WHICH HAVE BEEN INCORPORATED INTO THIS DOCUMENT AS A RESULT.

MALAGA WWTP MODIFICATIONS
WASTEWATER TREATMENT PLANT
MALAGA COUNTY WATER DISTRICT
FRESNO COUNTY
UV DISINFECTION
LEGEND SHEET

PROVOST & PRITCHARD ENGINEERING GROUP
ESTD. 1968
A Limited Liability Company
286 W. CESAR CHAVEZ AVENUE
FRESNO, CALIFORNIA 93711-6162
559/449-2700 FAX 559/449-2715
www.ppeng.com

DESIGN ENGINEER: MICHAEL TAYLOR
LICENSE NO:
DRAFTED BY: DWM
CHECKED BY:
SCALE: AS SHOWN
DATE: 2-14-2008
JOB NO: 10570802
DWG. NO:
SHEET 2 OF 16

10/8/2010 2:47 PM G:\Clients\Malaga CWD - 1057\10570802-UV Disinfection\DWG\SHEET\10570802-GN-LEGEND.dwg -Doug Mosteller

Know what's below. Call before you dig.

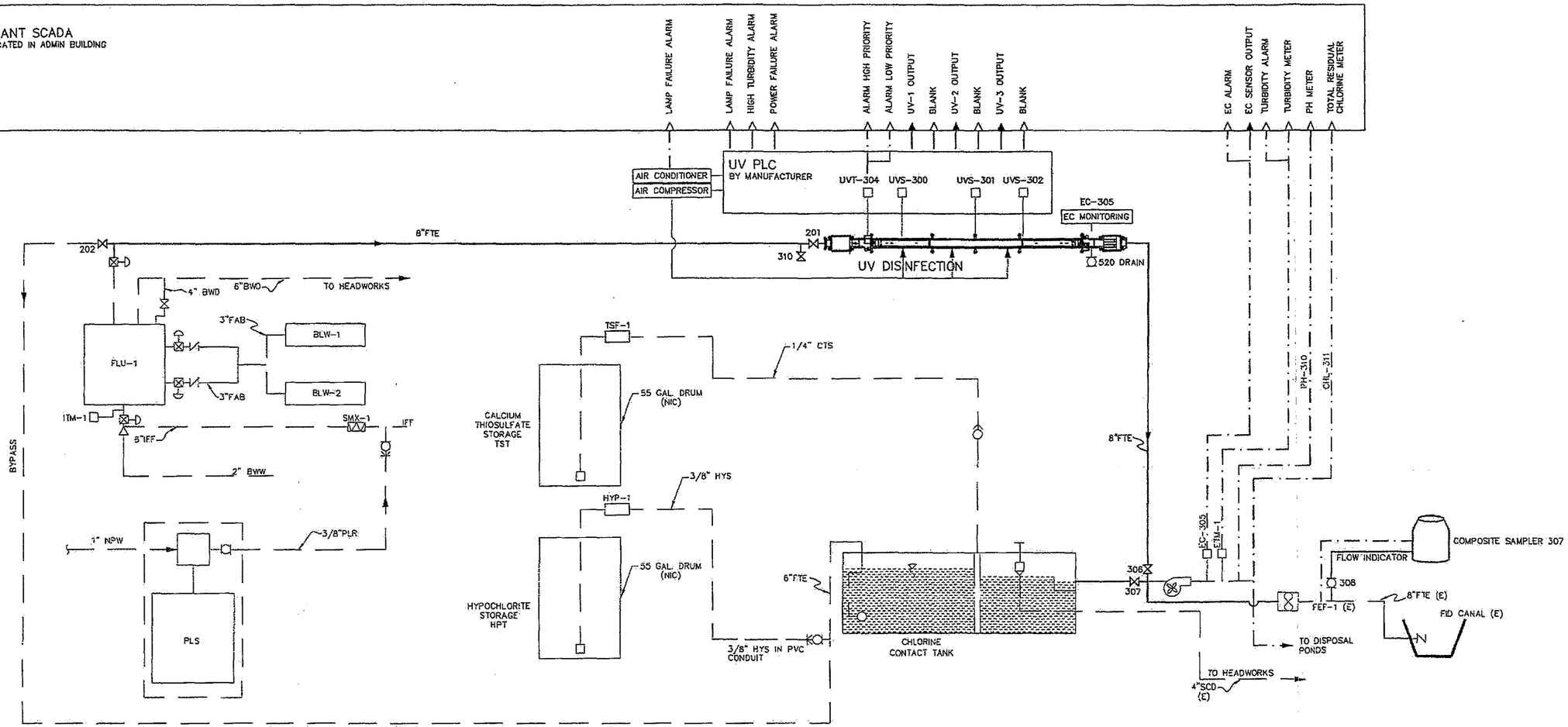

PROCESS SCHEMATIC

N.T.S.

LEGEND

- PROPOSED PROCESS LINE
- PROPOSED AUXILIARY LINE
- EXISTING PROCESS LINE

NOTE: A BOOSTER PUMP IS INSTALLED TO PROVIDE SUFFICIENT WATER PRESSURE FOR THE TURBIDIMETER AND CHLORINE RESIDUAL ANALYZER.

RECORD DOCUMENT

DATE 9-5-2010

THESE RECORD DOCUMENTS HAVE BEEN PREPARED IN PART, ON THE BASIS OF INFORMATION COMPILED AND FURNISHED BY OTHERS. THE ENGINEER WILL NOT BE RESPONSIBLE FOR ANY ERRORS OR OMISSIONS WHICH HAVE BEEN INCORPORATED INTO THIS DOCUMENT AS A RESULT.

COPYRIGHT 2006 by PROVOST & PRITCHARD ENGINEERING GROUP, INC. ALL RIGHTS RESERVED
The firm of Provost & Pritchard Engineering Group, Inc. retains all ownership and property rights in these plans and other applicable property rights in these plans. These plans may not be used, reproduced, copied or transmitted in any form or manner whatsoever, nor are they to be assigned to a third party without first obtaining the express written consent of Provost & Pritchard Engineering Group, Inc. In the event of unauthorized reuse of these plans by a third party, the third party shall indemnify and hold Provost & Pritchard Engineering Group, Inc. harmless, and shall defend Provost & Pritchard Engineering Group, Inc. from any claims arising out of the unauthorized reuse of these plans by third parties.

No.	REVISION	BY	DATE

MALAGA WWTP MODIFICATIONS
WASTEWATER TREATMENT PLANT
MALAGA COUNTY WATER DISTRICT
FRESNO COUNTY
UV DISINFECTION

PROCESS AND INSTRUMENTATION

ESTD. 1968
PROVOST & PRITCHARD
ENGINEERING GROUP
AN EMPLOYEE OWNED COMPANY
286 WEST CROMWELL AVENUE
FRESNO, CALIFORNIA 93711-6162
559/448-2700 FAX 559/449-2715
www.provpri.com

DESIGN ENGINEER: MICHAEL TAYLOR
LICENSE NO:
DRAFTED BY: DWM
CHECKED BY:
SCALE: AS SHOWN
DATE: 2-14-2006
JOB NO: 10570802
DWG. NO:
SHEET 3 OF 16

10/18/2010 9:34 AM G:\Clients\Malaga CWD - 1057\10570802-UV Disinfection\DWG\SHEET\10570802-E4A-PROCESS AND INSTr.dwg -Doug Meckell

Know what's below.
Call before you dig.

DESIGN CRITERIA

Design Criteria		
Flow		
Average daily flow	MGD	0.45
Design Flow	MGD	0.45
	GPM	313
Redundancy		Required per AWWA guidance
Filtered Water Quality		
Turbidity	NTU	2 as 24 hr mean, 5 for 5% of time, 10 anytime
UVT	%	65
UV unit		
Lamp Technology		Low pressure high intensity
Design UV dose	mJ/cm2	100
Adjustable power output by PLC		Pacing flow signal
UV Intensity Sensor		Yes
UV Transmittance sensor		Yes
Automatic wiping		Yes
Automatic Chemical Cleaning		Optional
Lamp warranty		12,000 hours lamp, 5 year ballast
Instrumentation, Control and Alarm		
Continous parameter monitoring		
Flow meter		Existing
Turbidity Monitoring		Existing before and after filter
EC	µmhos/cm	On-line monitoring
UV intensity monitoring		>= 1 probe/ bank
UV Transmittance monitoring		On-line monitoring
Operational UV dose	mJ/cm2	
Status monitoring		Each UV reactor
		Each UV lamp
		Lamp age
	Hour	Cumulative number of on/off cycle
	kW Hr	Cumulative total power consumption
		Reactor power output set point
		GFI
High Priority Alarms (Bypass and shut down)		Adjacent lamp failure
		Multiple lamp failure (>=5%)
		Low-Low UV intensity
		Low-Low UV Transmittance
		High -high turbidity
		Low-low operational UV dose
		GFI
		High-high EC
Low Priority Alarm		Individual lamp failure (<5%)
		Air compressor failure

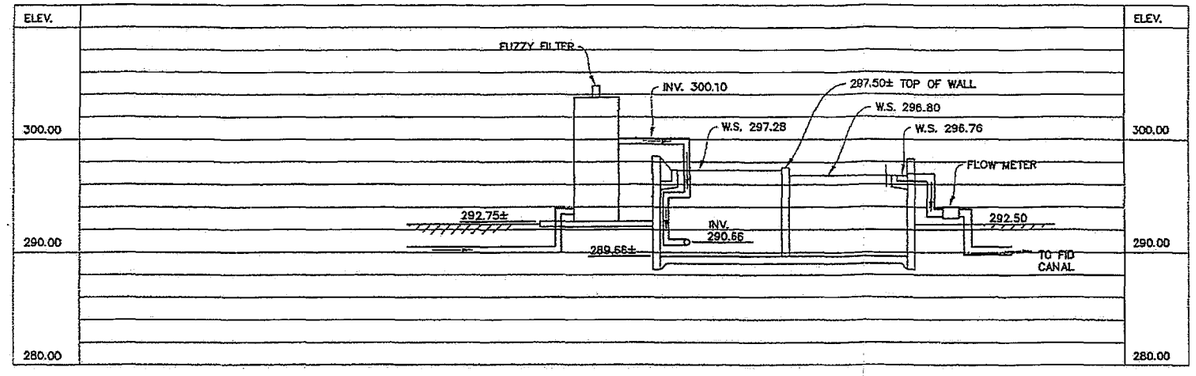

EXISTING HYDRAULIC PROFILE

SCALE: VER. 1/8" = 1'-0"
HOR. N.T.S.

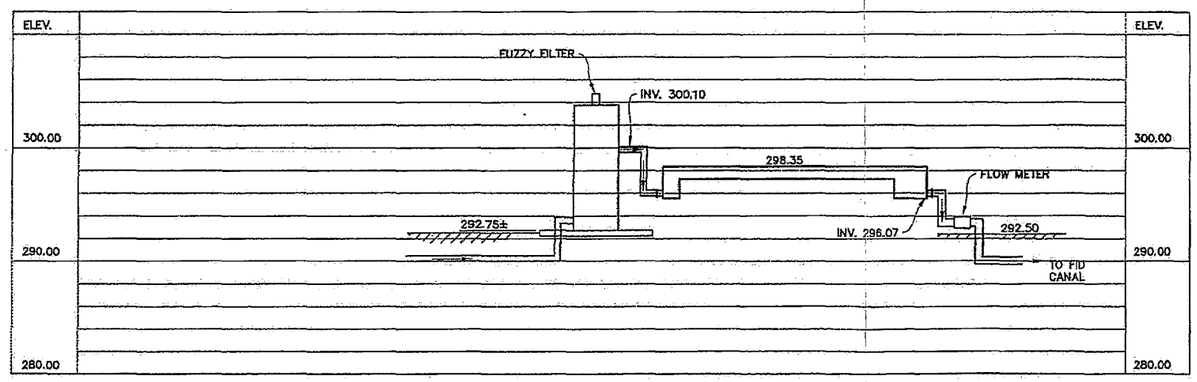

PROPOSED HYDRAULIC PROFILE

SCALE: VER. 1/8" = 1'-0"
HOR. N.T.S.

RECORD DOCUMENT
DATE 9-5-2010
THESE RECORD DOCUMENTS HAVE BEEN PREPARED IN PART, ON THE BASIS OF INFORMATION COMPILED AND FURNISHED BY OTHERS. THE ENGINEER WILL NOT BE RESPONSIBLE FOR ANY ERRORS OR OMISSIONS WHICH HAVE BEEN INCORPORATED INTO THIS DOCUMENT AS A RESULT.

COPYRIGHT 2008 by PROVOST & PRITCHARD ENGINEERING GROUP, INC. ALL RIGHTS RESERVED
The firm of Provost & Pritchard Engineering Group, Inc. expressly reserves its common law copyright and other property rights in these plans. These plans are not to be reproduced, changed or copied in any form or manner whatsoever, nor are they to be assigned to any third party without first obtaining the written permission and consent of Provost & Pritchard Engineering Group, Inc. In the event of unauthorized reuse of these plans by a third party, the third party shall hold the firm of Provost & Pritchard Engineering Group, Inc. harmless and bear the cost of Provost & Pritchard Engineering Group, Inc.'s legal fees associated with defending and enforcing these rights.

No.	REVISION	BY	DATE

MALAGA WWTP MODIFICATIONS
WASTEWATER TREATMENT PLANT
MALAGA COUNTY WATER DISTRICT
FRESNO COUNTY
UV DISINFECTION

DESIGN CRITERIA–HYDRAULIC PROFILE

PROVOST & PRITCHARD
ESTD. 1923
ENGINEERING GROUP
An Employee Owned Company
285 WEST CROWELL AVENUE
FRESNO, CALIFORNIA 93711-6182
559/449-2700 FAX 559/449-2715
www.provostpritchard.com

DESIGN ENGINEER: MICHAEL TAYLOR
LICENSE NO:
DRAFTED BY: DWM
CHECKED BY:
SCALE: AS SHOWN
DATE: 2-14-2008
JOB NO: 1057G802
DWG. NO:
SHEET 4 OF 16

10/11/2010 4:33 PM G:\Clients\Malaga CWD - 1057T\1057G802-UV Disinfection\DWG\SHEET\1057G802-DIA-DESIGN CRITERIA.dwg -Doug Hackett

811
Know what's below.
Call before you dig.

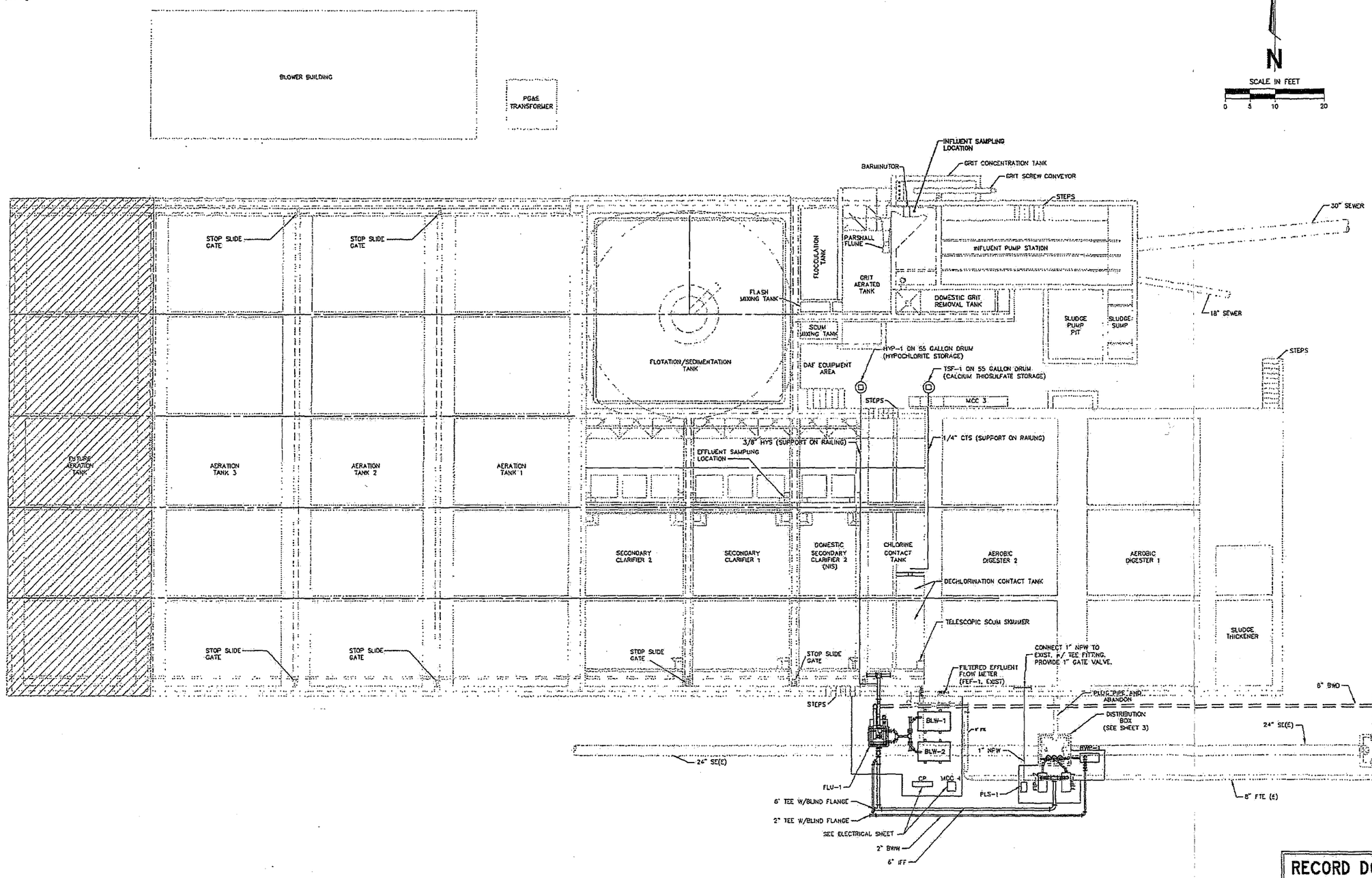

RECORD DOCUMENT

DATE 9-5-2010

THESE RECORD DOCUMENTS HAVE BEEN PREPARED IN PART, ON THE BASIS OF INFORMATION COMPILED AND FURNISHED BY OWNER. THE ENGINEER WILL NOT BE RESPONSIBLE FOR ANY ERRORS OR OMISSIONS WHICH HAVE BEEN INCORPORATED INTO THIS DOCUMENT AS A RESULT.

COPYRIGHT 2008 by PROVOST & PRITCHARD
CONSULTING GROUP. ALL LEGAL RIGHTS RESERVED
The firm of Provost & Pritchard Consulting Group, Inc. hereby reserves its common law copyright and other property rights in these plans, specifications, estimates, reports or similar documents. These documents are not to be reproduced, changed or copied in any form or manner whatsoever, nor are they to be assigned to any third party, without first obtaining the written permission and consent of Provost & Pritchard Consulting Group, Inc. In the event of unauthorized reuse of these documents by a third party, the third party shall hold the firm of Provost & Pritchard Consulting Group, Inc. harmless, and bear the cost of Provost & Pritchard Consulting Group, Inc.'s legal fees associated with defending our ownership, liens rights.

No.	REVISION	BY	DATE

MALAGA WWTP MODIFICATIONS
WASTEWATER TREATMENT PLANT
MALAGA COUNTY WATER DISTRICT
FRESNO COUNTY
UV DISINFECTION

LAYOUT – EXISTING

PROVOST & PRITCHARD
ENGINEERING GROUP
An Employee Owned Company
258 WEST DRAKE AVENUE
FRESNO, CALIFORNIA 93711-6162
559/449-2700 FAX 559/449-2715
www.ppeng.com

DESIGN ENGINEER: MICHAEL TAYLOR
LICENSE NO:
DRAFTED BY: DWM
CHECKED BY:
SCALE: AS SHOWN
DATE: 2-14-2008
JOB NO: 10570802
DWG. NO:
SHEET 5 OF 16

10/11/2010 4:33 PM G:\Clients\Malaga CWD - 1057\10570802-UV Disinfection\Sheet\SHEET\10570802-LO-EXISTING.dwg -Doug Mackall

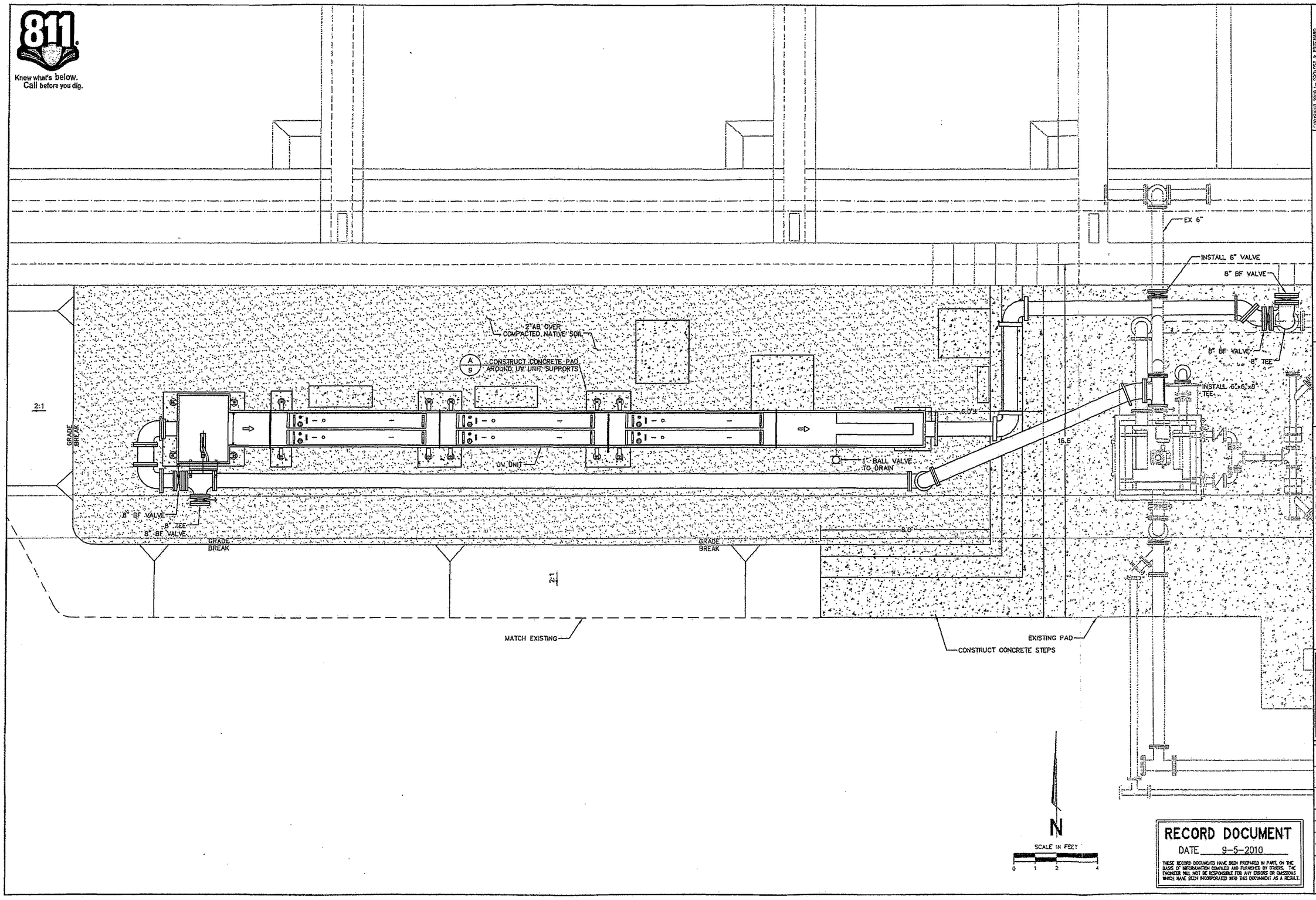

COPYRIGHT 2008 by PROVOST & PRITCHARD ENGINEERING GROUP, INC. ALL RIGHTS RESERVED
The information, designs, drawings, and specifications, which are the property of Provost & Pritchard Engineering Group, Inc., expressly reserves its common law copyright and other property rights in these plans. These plans are not to be reused in whole or in part nor are they to be altered in any form or manner whatsoever, nor are they to be assigned to any third party without first obtaining the written permission and consent of Provost & Pritchard Engineering Group, Inc. In the event of unauthorized reuse of these plans by a third party, the third party shall hold the firm of Provost & Pritchard Engineering Group, Inc. harmless and shall bear the cost of Provost & Pritchard Engineering Group, Inc.'s legal fees associated with defending our ownership interest rights.

No.	REVISION	BY	DATE

MALAGA WWTP MODIFICATIONS
WASTEWATER TREATMENT PLANT
MALAGA COUNTY WATER DISTRICT
FRESNO COUNTY
UV DISINFECTION

LAYOUT – PROPOSED

PROVOST & PRITCHARD
ESTD. 1968
ENGINEERING GROUP, INC.
AN EMPLOYEE OWNED COMPANY
286 WEST CHANNEL AVENUE
FRESNO, CALIFORNIA 93711-6162
559/449-2700 FAX 559/449-2715
www.ppeng.com

DESIGN ENGINEER: MICHAEL TAYLOR
LICENSE NO:
DRAFTED BY: DWM
CHECKED BY:
SCALE: AS SHOWN
DATE: 2-14-2008
JOB NO: 10570802
DWG. NO:
SHEET 6 OF 16

RECORD DOCUMENT
DATE 9-5-2010
THESE RECORD DOCUMENTS HAVE BEEN PREPARED IN PART, ON THE BASIS OF INFORMANTION COMPILED AND FURNISHED BY OTHERS. THE ENGINEER WILL NOT BE RESPONSIBLE FOR ANY ERRORS OR OMISSIONS WHICH HAVE BEEN INCORPORATED INTO THIS DOCUMENT AS A RESULT.

10/18/2010 10:40 AM G:\Clients\Malaga CWD - 10570\10570802-UV Disinfection\DWG\SHEET\10570802-LO-PROPOSED.dwg -Doug Mechell

Know what's below.
Call before you dig.

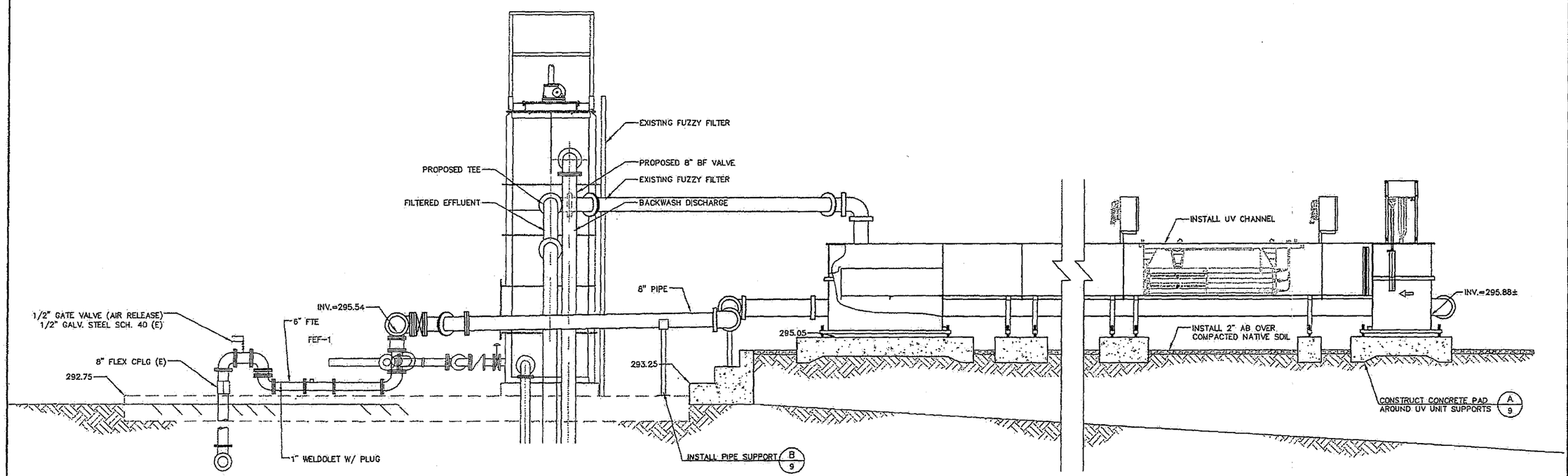

X 7 SECTION B–B
SCALE: AS SHOWN

SCALE IN FEET
0 1 2 4

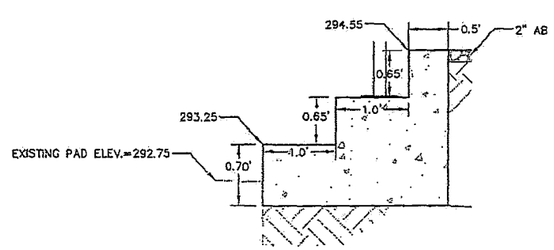

STEP DETAIL
SCALE: 1" = 1'–0"

RECORD DOCUMENT
DATE 9-5-2010
THESE RECORD DOCUMENTS HAVE BEEN PREPARED IN PART, ON THE BASIS OF INFORMATION COMPILED AND FURNISHED BY OTHERS. THE ENGINEER WILL NOT BE RESPONSIBLE FOR ANY ERRORS OR OMISSIONS WHICH HAVE BEEN INCORPORATED INTO THIS DOCUMENT AS A RESULT.

ASSUMPTION: EXISTING PAD ELEVATION = 292.75
INSTALL PIPE SUPPORTS PER B 9

COPYRIGHT 2009 by PROVOST & PRITCHARD
This drawing, as an instrument of service, is the property of Provost & Pritchard Engineering Group, Inc. and is protected by copyright law. Provost & Pritchard Engineering Group, Inc. expressly reserves its common law copyright and other property rights in these plans. These plans are not to be reproduced, changed, or copied in any form or manner whatsoever, nor are they to be assigned to any third party, without first obtaining the written permission and consent of Provost & Pritchard Engineering Group, Inc. In the event of unauthorized reuse of these plans by a third party, the third party shall hold Inc. Firm of Provost & Pritchard Engineering Group, Inc. harmless, and shall bear the cost of Provost & Pritchard Engineering Group, Inc.'s legal fees associated with defending the action or claim.

No.	REVISION	BY	DATE

MALAGA WWTP MODIFICATIONS
WASTEWATER TREATMENT PLANT
MALAGA COUNTY WATER DISTRICT
FRESNO COUNTY
UV DISINFECTION

CHANNEL SECTION

EST. 1968
PROVOST & PRITCHARD
ENGINEERING GROUP
An Employee Owned Company
286 WEST CROMWELL AVENUE
FRESNO, CALIFORNIA 93711-6162
559/449-2700 FAX 559/449-2715
www.ppeng.com

DESIGN ENGINEER: MICHAEL TAYLOR
LICENSE NO:
DRAFTED BY: DWM | CHECKED BY:
SCALE: AS SHOWN
DATE: 2-14-2008
JOB NO: 10570802
DWG. NO:
SHEET 7 OF 16

10/18/2010 10:40 AM G:\Clients\Malaga CWD - 1057\10570802-UV Disinfection\DWG\SHEET\10570802-01-SECTION.dwg - Doug Meckel

811
Know what's below.
Call before you dig.

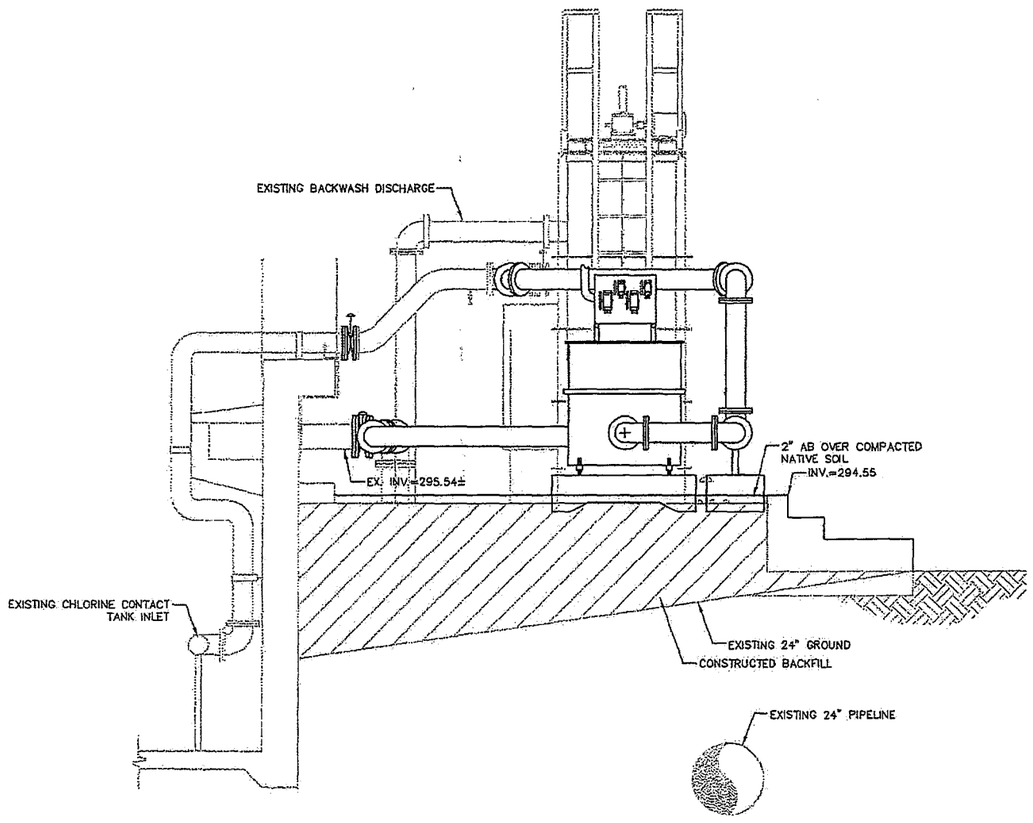

X/8 CROSS SECTION (FACING EAST)
SCALE: AS SHOWN
SCALE IN FEET 0 1 2 4

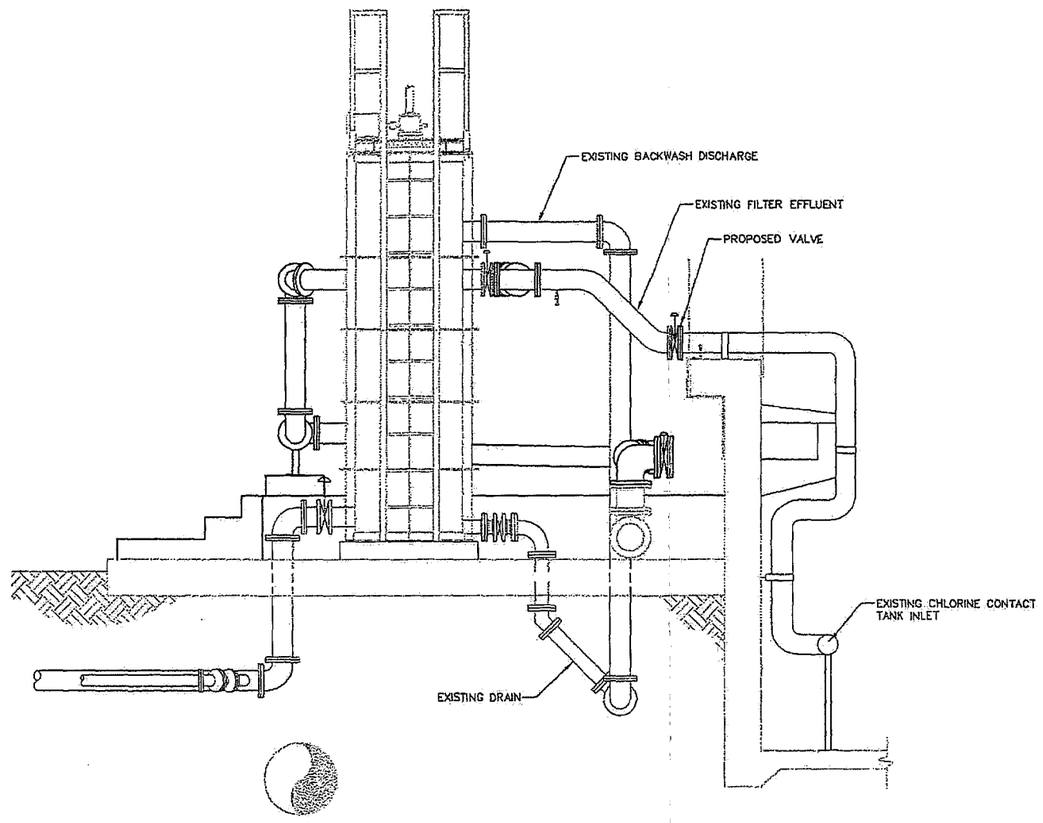

X/8 CROSS SECTION (FACING WEST)
SCALE: AS SHOWN
SCALE IN FEET 0 1 2 4

RECORD DOCUMENT
DATE 9-5-2010
THESE RECORD DOCUMENTS HAVE BEEN PREPARED IN PART, ON THE BASIS OF INFORMATION COMPILED AND FURNISHED BY OTHERS. THE ENGINEER WILL NOT BE RESPONSIBLE FOR ANY ERRORS OR OMISSIONS WHICH HAVE BEEN INCORPORATED INTO THIS DOCUMENT AS A RESULT.

COPYRIGHT 2008 by PROVOST & PRITCHARD CONSULTING GROUP, INC. ALL RIGHTS RESERVED
The item of record is intended for use on the project shown on this drawing. It is unlawful to reproduce or generally distribute this drawing or any other applicable property rights in these plans. These plans are instruments of service of Provost & Pritchard Consulting Group, Inc. and are not to be used for any purpose other than the project specified herein. Any other use or reproduction without the express written permission of Provost & Pritchard Consulting Group, Inc. is in violation of applicable laws and regulations. Violators will be held liable for any damages incurred by Provost & Pritchard Consulting Group, Inc. and shall be prosecuted to the fullest extent of the law. Provost & Pritchard Consulting Group, Inc.'s legal fees associated with defending and enforcing these rights.

No.	REVISION	BY	DATE

MALAGA WWTP MODIFICATIONS
WASTEWATER TREATMENT PLANT
MALAGA COUNTY WATER DISTRICT
FRESNO COUNTY
UV DISINFECTION
CROSS SECTION

ESTD. 1963
PROVOST & PRITCHARD
ENGINEERING GROUP
Associated Offices Throughout Country
286 WEST CROMWELL AVENUE
FRESNO, CALIFORNIA 93711-6162
559/449-2700 FAX 559/449-2715
www.ppcg.com

DESIGN ENGINEER: MICHAEL TAYLOR
LICENSE NO:
DRAFTED BY: DWM
CHECKED BY:
SCALE: AS SHOWN
DATE: 2-14-2008
JOB NO: 10570802
DWG. NO:
SHEET 8 OF 16

10/16/2010 10:40 AM G:\Clients\Malaga CWD - 1057\10570802-UV Disinfection\DWG\SHEET\10570802-01-CROSS SECTION.dwg -Doug Mackell

Know what's below. Call before you dig.

DIMENSIONS (INCHES)					
PIPE SIZE	STRAP SIZE	THREAD STUD	BASE PLATE	EXTENSION PIPE REQ'D	MINIMUM DIST. TO FLOOR
8"	1/2"x2"	1"x6"	8"x8"x1/4"	2" SCH 40	9"

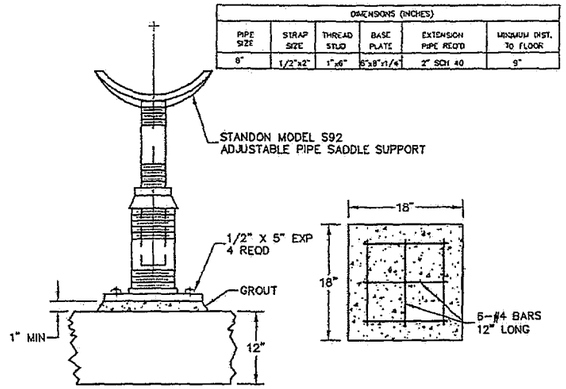

B/9 PIPE SUPPORT
N.T.S.

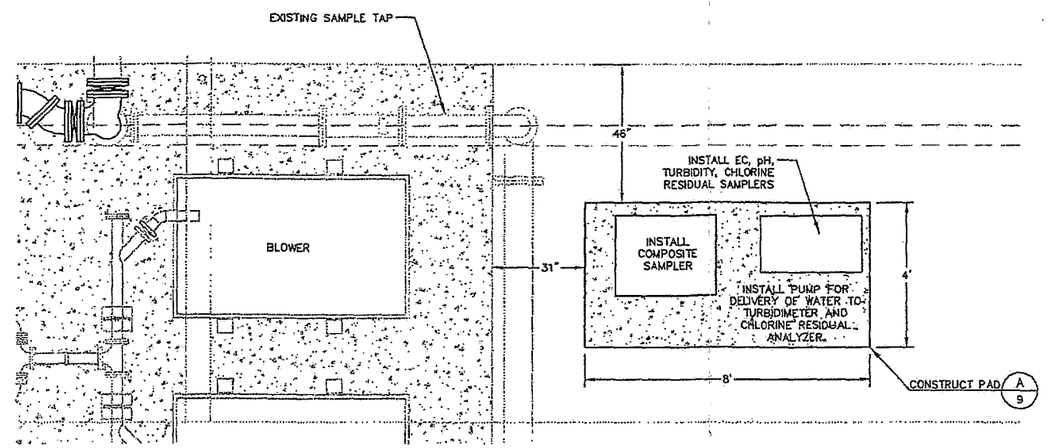

COMPOSITE SAMPLER LAYOUT
SCALE: 1"=2'

NOTE: SAMPLE PIPE INSTALLED NORTH OF INSTRUMENTS (NOT SHOWN).

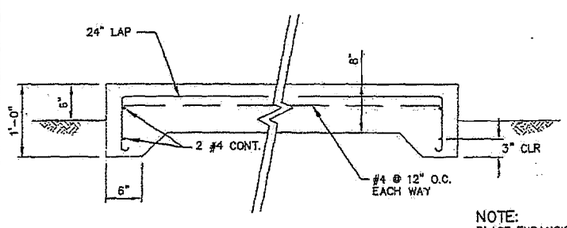

NOTE:
PLACE EXPANSION JOINT MATERIAL ADJACENT TO ANY OTHER STRUCTURE

A/9 UV UNIT CONCRETE SUPPORT SLAB
N.T.S.

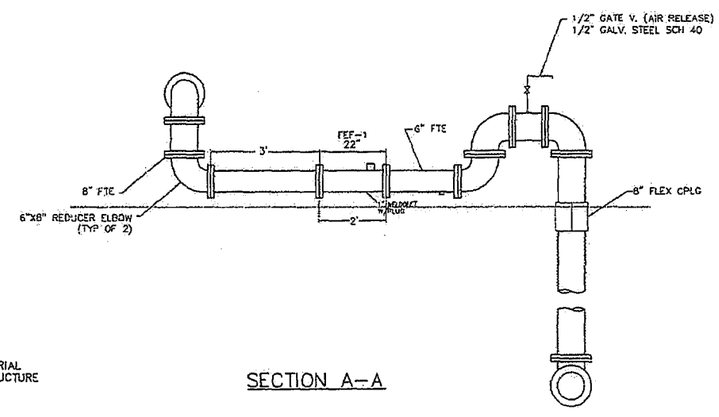

SECTION A-A

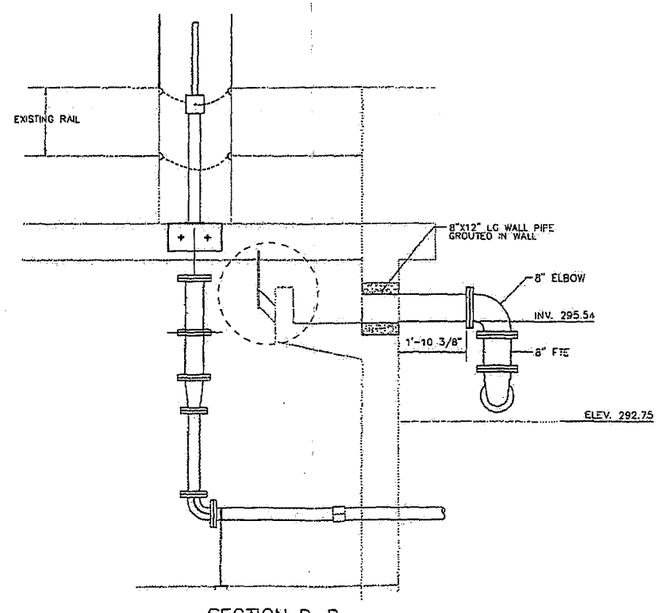

SECTION B-B

EXISTING DISCHARGE PIPE

RECORD DOCUMENT
DATE 9-5-2010
THESE RECORD DOCUMENTS HAVE BEEN PREPARED IN PART, OR THE BASIS OF INFORMATION COMPILED AND FURNISHED BY OTHERS. THE ENGINEER WILL NOT BE RESPONSIBLE FOR ANY ERRORS OR OMISSIONS WHICH HAVE BEEN INCORPORATED INTO THIS DOCUMENT AS A RESULT.

COPYRIGHT 2008 by PROVOST & PRITCHARD ENGINEERING GROUP, INC. ALL RIGHTS RESERVED
The instruments of service and the designs they represent, including but not limited to, the expressly reserved, its common law copyright and other applicable property rights in these plans, these designs, drawings, specifications, and other documents, or any part thereof, may not be reproduced, changed or copied in any form or manner whatsoever, nor are they to be assigned to any third party without first obtaining the written permission and consent of Provost & Pritchard Engineering Group, Inc. In the event of unauthorized reuse of these plans by a third party, the third party shall hold the firm of Provost & Pritchard Engineering Group, Inc. harmless. It is agreed that the firm of Provost & Pritchard Engineering Group, Inc. shall be compensated for any unauthorized reuse of these rights.

NO.	REVISION	BY	DATE

MALAGA WWTP MODIFICATIONS
WASTEWATER TREATMENT PLANT
MALAGA COUNTY WATER DISTRICT
FRESNO COUNTY
UV DISINFECTION
DETAILS

PROVOST & PRITCHARD
ESTD. 1923
ENGINEERING GROUP
An Employee Owned Company
288 WEST CEDARWELL AVENUE
FRESNO, CALIFORNIA 93711-6162
559/449-2700 FAX 559/449-2715
www.provpritch.com

DESIGN ENGINEER: MICHAEL TAYLOR
LICENSE NO:
DRAFTED BY: DWM
CHECKED BY:
SCALE: AS SHOWN
DATE: 2-14-2008
JOB NO: 10570802
DWG. NO:
SHEET 9 OF 16

10/18/2010 10:40 AM G:\Clients\Malaga CWD - 10570802-UV Disinfection\DWG\SHEET\10570802-01-DETAILS.dwg - Doug MacNeil

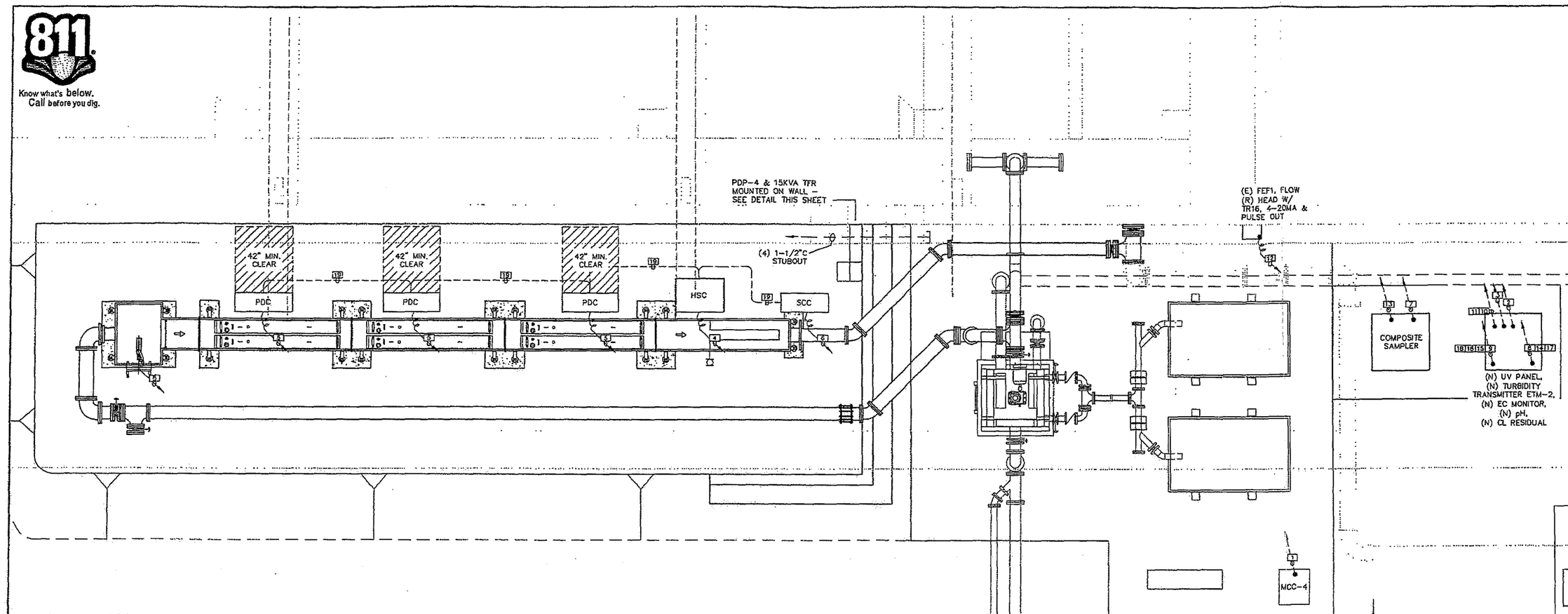

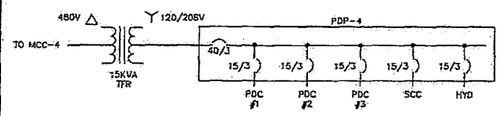

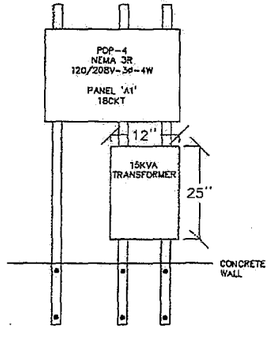

MOUNTING ELEVATION

NOT TO SCALE

48 HOURS
BEFORE EXCAVATING
CALL "USA" TOLL FREE
800-227-2600
UNDER GROUND SERVICE
ALERT

CONDUIT CONSTRUCTION MATERIAL NOTES:

ABOVE GRADE – HOT DIPPED GALVANIZED RIGID STEEL CONDUIT TO BE USED FOR ALL EXTERIOR AND INTERIOR LOCATIONS ABOVE GRADE OR ELSEWHERE SHOWN ON PLANS. ALL RIGID CONDUIT AND FITTINGS TO BE THREADED. USE OF SET SCREW OR COMPRESSION TYPE CONNECTOR IS PROHIBITED. MEYERS HUBS TO BE USED ON ALL EXTERIOR PANEL CONNECTIONS.

BELOW GRADE – RIGID PVC NONMETALLIC CONDUIT SCHEDULE 40 TO BE USED FOR ALL UNDERGROUND LOCATIONS AND BELOW VAPOR BARRIER OF SLAB. NO CONDUITS SHALL BE INSTALLED TO REDUCE THE STRUCTURAL INTEGRITY OF FOOTINGS.

CHEMICAL BUILDINGS AND CORROSIVE ATMOSPHERES – RIGID PVC NONMETALLIC CONDUIT SCHEDULE 80 TO BE USED FOR ALL INTERIOR LOCATIONS ABOVE GRADE IN CHEMICAL BUILDINGS AND CORROSIVE ENVIRONMENTS.

THROUGH CONCRETE SLABS AND EXTERIOR CORROSIVE ATMOSPHERES – PVC COATED GALVANIZED RIGID STEEL CONDUIT MINIMUM 40 MIL FACTORY COATING TO BE USED FOR ALL EXPOSED CONDUITS THROUGH CONCRETE SLABS (MINIMUM 12" ABOVE AND BELOW SLAB) AND ALL EXTERIOR LOCATION CORROSIVE ATMOSPHERES. USE MANUFACTURERS' SPECIFIED TOOLS AND PROCEDURES FOR INSTALLATION.

MOTOR OR SENSOR CONNECTIONS – LIQUID TIGHT FLEXIBLE METAL CONDUIT (UV RESISTANT) TO ONLY BE USED ON CONNECTIONS TO MOTORS OR SENSORS. MAXIMUM LENGTH TO BE 30".

JUNCTION BOXES – MINIMUM SIZE PER NEC. EXPOSED LOCATION, 1 AND 2 GANG TO BE CAST IRON DEVICE BOXES TYPE FS/FD SUITABLE FOR WET LOCATIONS. EXPOSED LOCATION EXTERIOR LARGER SIZES CONTINUOUS HINGE TYPE 4, CORROSIVE LOCATIONS CONTINUOUS HINGE TYPE 4X STAINLESS STEEL.

GROUND CONNECTIONS – GROUND CONNECTIONS TO BE EXOTHERMIC CADWELD (ALL 600 AMP OR LARGER SERVICE) OR BURNDY HYDRAULIC COMPRESSION CONNECTORS. GROUND BUS CONNECTIONS TO BE CRIMP LUG TYPE WITH BOLTED CONNECTION TO GROUND BUS.

CONTACT EPS TO SCHEDULE AN ELECTRICAL PRECONSTRUCTION MEETING PRIOR TO COMMENCING CONSTRUCTION

MALAGA WWTP UV SITE PLAN

SCALE: 3/8" = 1'-0"

MALAGA UV CABLE AND CONDUIT SCHEDULE

NO.	QTY	SIZE	NO. WIRES	WIRE SIZE	GND	FUNCTION	FROM	TO	
1	1	1"	3	#8	#8	UV PANEL POWER	(E) MCC-4	(N) 15KVA TFR	-40
2	1	3/4"	12	#14		DISCRETE CONTROL	(N) UV PANEL	(E) PLC	-90
3	1	3/4"	1	BELDEN 9841		MODBUS COMMUNICATION	(N) UV PANEL	(E) PLC	-90
4	1	PER	MFG	PER	MFG	HSC POWER	(N) PDP-4	HSC	
5	1	PER	MFG	PER	MFG	UV LAMP POWER	(N) PDP-4	PDC	
6	1	PER	MFG	PER	MFG	SCC POWER	(N) PDP-4	SCC	
7	1	3/4"	2	#12	#12	COMPOSITE SAMPLER	(N) COMPOSITE SAMPLER	(N) PDP-4	0
8	1	3/4"	1	#18 TSP		EC MONITORING	(N) CIT	(E) PLC	-90
9	1	3/4"	2	#12	#12	EC MONITORING POWER	(N) CIT	(N) PDP-4	0
10	1	3/4"	1	#18 TSP		TURBIDITY TRANSMITTE	(N) TIT	(E) PLC	-90
11	1	3/4"	2	#12	#12	TURBIDITY TRANSMITTER POWER	(N) TIT	(N) PDP-4	0
12	1	3/4"	2	#18 TSP		FLOW TRANSMITTER	(E) FEF1	(N) COMPOSITE SAMPLER	0
13	1	3/4"	1	#18 TSP		FLOW TRANSMITTER	(N) COMPOSITE SAMPLER	(E) PLC	-90
14	1	3/4"	1	#18 TSP		PH TRANSMITTER SIGNAL	(N) PH	(E) PLC	-90
15	1	3/4"	2	#12	#12	PH TRANSMITTER POWER	(N) PH	(N) PDP-4	0
16	1	3/4"	2	#12	#12	ANTI-CONDENSATION HTR	(N) ANTI-CONDENSATION HTR	(N) PDP-4	0
17	1	3/4"	1	#18 TSP		CL RESIDUAL POWER	(N) CL	(E) PLC	-90
18	1	3/4"	2	#12	#12	CL RESIDUAL	(N) CL	(N) PDP-4	0
19	PER	PER	MFG	PER	MFG	TORJAN UV	(N) TORJAN UV	(N) TORJAN UV	

LEGEND:

- TIT = TURBIDITY METER
- CIT = EC MONITORING
- UV = UV LAMP
- # = CONDUIT SCHEDULE NUMBER
- (N) = NEW
- (E) = EXISTING

EPS IS RESPONSIBLE FOR ELECTRICAL SYSTEMS DESIGN ONLY. EPS IS NOT RESPONSIBLE FOR ELECTRICAL SAFETY WORK PROCEDURES AND/OR USE OF REQUIRED PERSONAL PROTECTIVE EQUIPMENT, SEE NFPA 70E "STANDARD FOR ELECTRICAL SAFETY IN THE WORKPLACE" AND OSHA 29 CFR.

CONTRACTOR WILL INSTALL ALL MATERIALS AS DIRECTED BY PROJECT SPECIFICATION, PLANS, ADDENDUMS - NO EXCEPTIONS. ANY WORK AND/OR METHODS INSTALLED AND/OR CONNECTED NOT IN ACCORDANCE WITH THE ABOVE OR WITH THE APPROVAL OF THE ENGINEER WILL BE REPLACED AT CONTRACTOR'S EXPENSE.

AS-BUILT AS OF AUG. 2010

THESE AS-BUILT OR RECORD DRAWINGS HAVE BEEN PREPARED, IN PART, ON THE BASIS OF INFORMATION COMPILED AND FURNISHED BY OTHERS. THE ENGINEER WILL NOT BE RESPONSIBLE FOR ANY ERRORS OR OMISSIONS WHICH HAVE BEEN INCORPORATED INTO THIS DOCUMENT AS A RESULT.

ELECTRICAL POWER SYSTEMS E. P. S. INC.
Professional and Consulting Electrical Engineering

GARY R. OLSEN, P.E. CA. EE 8283
JOE PREVENDAR, P.E. CA. EE 16581

4049 N. FRESNO ST.
FRESNO, CA 93726
(559) 221-7230
FAX: 221-0507
gary@epsfresno.com
joe@epsfresno.com

DATE: Oct-10
JOB #: PP-08-166
PLTSCALE: 1:2
DWG. #: 10570802-DT-DETAILS
DSGN BY: JPP | DRWN BY: AVS

COPYRIGHT 2003 by PROVOST & PRITCHARD ENGINEERING GROUP, INC. DBA PROVOST & PRITCHARD CONSULTING GROUP

No.	REVISION	BY	DATE

MALAGA WWTP MODIFICATIONS
WASTEWATER TREATMENT PLANT
MALAGA COUNTY WATER DISTRICT
FRESNO COUNTY
UV DISINFECTION

ELECTRICAL SITE PLAN

EST. 1968
PROVOST & PRITCHARD CPA
ENGINEERING GROUP
An Employee Owned Company
836 W. SHAW AVENUE
FRESNO, CALIFORNIA 93711-6162
559/449-2700 FAX 559/449-2715
www.pprg.com

DESIGN ENGINEER: MICHAEL TAYLOR
LICENSE NO:
DRAFTED BY: DWM | CHECKED BY:
SCALE: 3/8" = 1'-0"
DATE: 2-14-2008
JOB NO: 10570802
DWG. NO:
SHEET E1 OF 13

10/11/2010 4:38 PM O:\Clients\Malaga CWD - 1057\10570802-UV Disinfection\DWG\SHEET\10570802-DT-DETAILS.dwg -Doug Mayfield

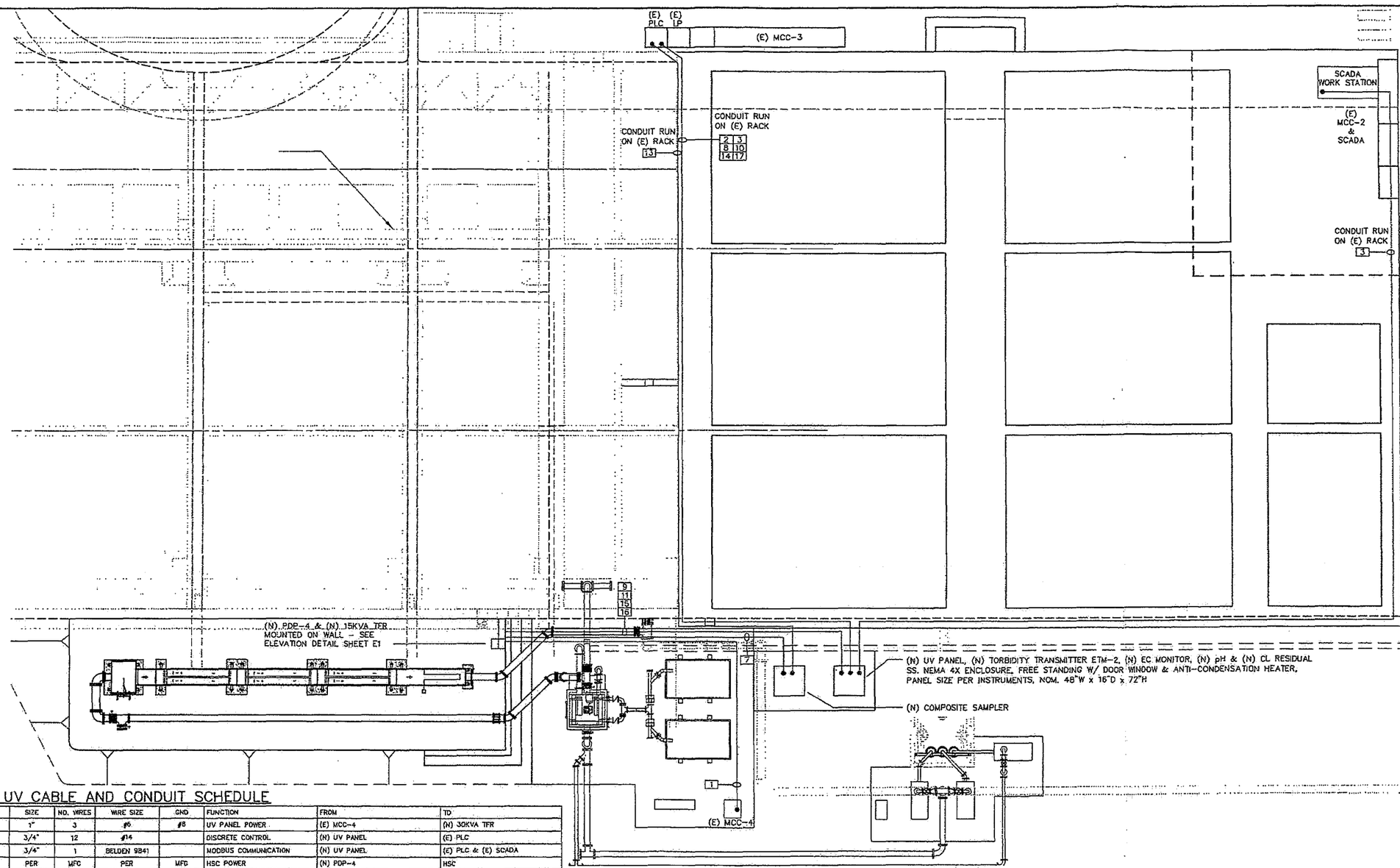

MALAGA UV CABLE AND CONDUIT SCHEDULE

NO.	QTY	SIZE	NO. WIRES	WIRE SIZE	GND	FUNCTION	FROM	TO
1	1	1"	3	#6	#8	UV PANEL POWER	(E) MCC-4	(N) 30KVA TFR
2	1	3/4"	12	#14		DISCRETE CONTROL	(N) UV PANEL	(E) PLC
3	1	3/4"	1	BELDEN 9841		MODBUS COMMUNICATION	(N) UV PANEL	(E) PLC & (E) SCADA
4	1	PER	MFG	PER	MFG	HSC POWER	(N) PDP-4	HSC
5	1	PER	MFG	PER	MFG	UV LAMP POWER	(N) PDP-4	PDC
6	1	PER	MFG	PER	MFG	SCC POWER	(N) PDP-4	SCC
7	1	3/4"	2	#12	#12	COMPOSITE SAMPLER	(N) COMPOSITE SAMPLER	(N) PDP-4
8	1	3/4"	1	#18 TSP		EC MONITORING	(N) CIT	(E) PLC
9	1	3/4"	2	#12	#12	EC MONITORING POWER	(N) CIT	(N) PDP-4
10	1	3/4"	1	#18 TSP		TURBIDITY TRANSMITTE	(N) TIT	(E) PLC
11	1	3/4"	2	#12	#12	TURBIDITY TRANSMITTER POWER	(N) TIT	(N) PDP-4
12	1	3/4"	2	#18 TSP		FLOW TRANSMITTER	(E) FET1	(N) COMPOSITE SAMPLER
13	1	3/4"	1	#18 TSP		FLOW TRANSMITTER	(N) COMPOSITE SAMPLER	(E) PLC
14	1	3/4"	1	#18 TSP		PH TRANSMITTER SIGNAL	(N) PH	(E) PLC
15	1	3/4"	2	#12	#12	PH TRANSMITTER POWER	(N) PH	(N) PDP-4
16	1	3/4"	2	#12	#12	ANTI-CONDENSATION HTR	(N) ANTI-CONDENSATION HTR	(N) PDP-4
17	1	3/4"	1	#18 TSP		CL RESIDUAL POWER	(N) CL	(E) PLC
18	1	3/4"	2	#12	#12	CL RESIDUAL	(N) CL	(N) PDP-4
19	PER	PER	MFG	PER	MFG	TORJAN UV	(N) TORJAN UV	(N) TORJAN UV

Know what's below. Call before you dig.

48 HOURS
BEFORE EXCAVATING
CALL "USA" TOLL FREE
800-227-2600
UNDER GROUND SERVICE
ALERT

EPS IS RESPONSIBLE FOR ELECTRICAL SYSTEMS DESIGN ONLY. EPS IS NOT RESPONSIBLE FOR ELECTRICAL SAFETY WORK PROCEDURES AND/OR USE OF REQUIRED PERSONAL PROTECTIVE EQUIPMENT, SEE NFPA 70E "STANDARD FOR ELECTRICAL SAFETY IN THE WORKPLACE" AND OSHA 29 CFR.

CONTRACTOR WILL INSTALL ALL MATERIALS AS DIRECTED BY PROJECT SPECIFICATION, PLANS, ADDENDUMS - NO EXCEPTIONS. ANY WORK AND/OR METHODS INSTALLED AND/OR CONNECTED NOT IN ACCORDANCE WITH THE ABOVE OR WITH THE APPROVAL OF THE ENGINEER WILL BE REPLACED AT CONTRACTOR'S EXPENSE.

AS-BUILT AS OF AUG. 2010

THESE AS-BUILT OR RECORD DRAWINGS HAVE BEEN PREPARED, IN PART, ON THE BASIS OF INFORMATION COMPILED AND FURNISHED BY OTHERS. THE ENGINEER WILL NOT BE RESPONSIBLE FOR ANY ERRORS OR OMISSIONS WHICH HAVE BEEN INCORPORATED INTO THIS DOCUMENT AS A RESULT.

ELECTRICAL POWER SYSTEMS E. P. S. INC.
Professional and Consulting Electrical Engineering
4049 N. FRESNO ST.
FRESNO, CA 93726
(559) 221-7230
FAX: 221-0507
gary@epsfresno.com
joe@epsfresno.com
GARY R. OLSEN, P.E. CA. EE 8283
JOE PREVENDAR, P.E. CA. EE 16581

DATE: Sep-10
JOB #: PP-08-166
PLTSCALE: 1:2
DWG. #: PP166SP02-AB
DSGN BY: JPP | DRWN BY: AVS

No.	REVISION	BY	DATE

COPYRIGHT 2008 BY PROVOST & PRITCHARD ENGINEERING GROUP, INC. ALL RIGHTS RESERVED
The firm of Provost & Pritchard Engineering Group, Inc. expressly reserves its common law copyright and other property rights in these plans. These plans are not to be changed or copied in any form or manner whatsoever, nor are they to be assigned to any third party without first obtaining the written permission and consent of Provost & Pritchard Engineering Group, Inc. In the event of unauthorized reuse of these plans by a third party, the third party shall hold the firm of Provost & Pritchard Engineering Group, Inc. harmless for any damages resulting therefrom. Provost & Pritchard Engineering Group, Inc. is not responsible for any changes made to these plans and addenda, lines, rights.

MALAGA WWTP MODIFICATIONS
WASTEWATER TREATMENT PLANT
MALAGA COUNTY WATER DISTRICT
FRESNO COUNTY
UV DISINFECTION

ELECTRICAL SITE PLAN

EST. 1968 PROVOST & PRITCHARD ENGINEERING GROUP
An Employee Owned Company
286 W.CL. Dowell Avenue
Fresno, California 93711
559/449-2700 FAX 559/449-2715
www.ppeng.com

DESIGN ENGINEER: MICHAEL TAYLOR
LICENSE NO:
DRAFTED BY: DWM | CHECKED BY:
SCALE: 3/16" = 1'-0"
DATE: 2-14-2008
JOB NO: 10570802
DWG. NO:
SHEET E2 OF 13

9/20/2010 2:07 PM U:\eng m\Malaga\PP166SP02-AB Eng -Doug Nichell

Know what's below.
Call before you dig.

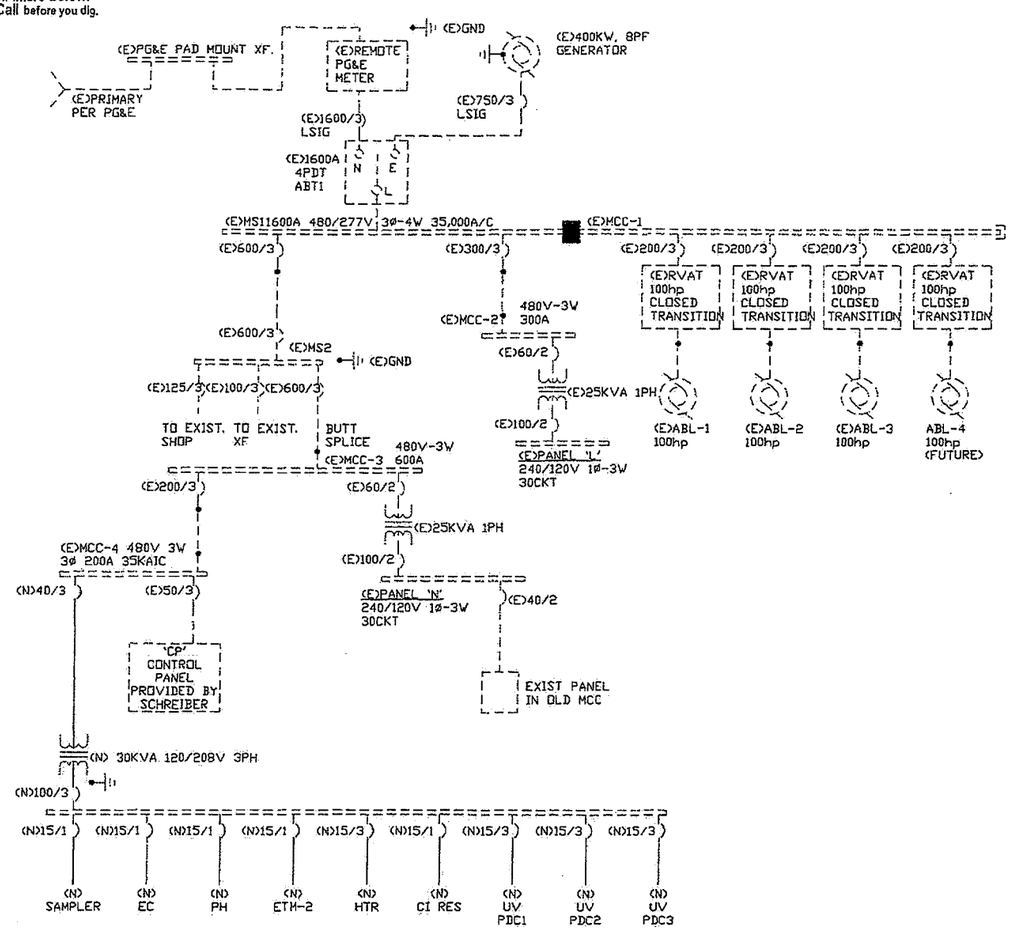

SINGLE LINE

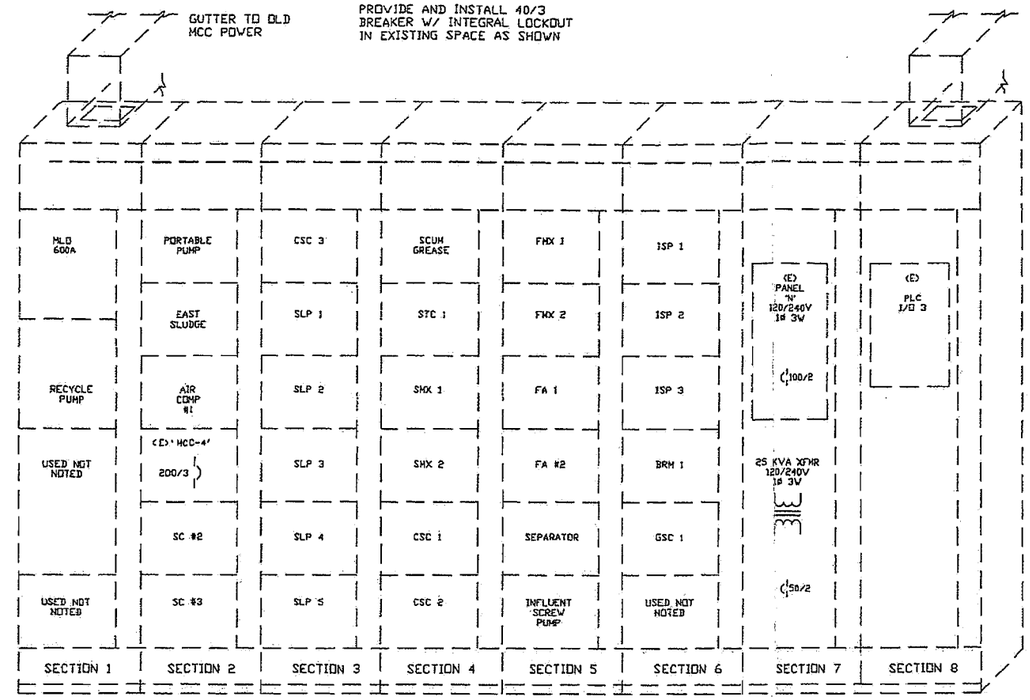

EXISTING MCC-3 ELEVATION
NOT TO SCALE

48 HOURS
BEFORE EXCAVATING
CALL "USA" TOLL FREE
800-227-2600
UNDER GROUND SERVICE
ALERT

EPS IS RESPONSIBLE FOR ELECTRICAL SYSTEMS DESIGN ONLY. EPS IS NOT RESPONSIBLE FOR ELECTRICAL SAFETY WORK PROCEDURES AND/OR USE OF REQUIRED PERSONAL PROTECTIVE EQUIPMENT, SEE NFPA 70E "STANDARD FOR ELECTRICAL SAFETY IN THE WORKPLACE" AND OSHA 29 CFR.

CONTRACTOR WILL INSTALL ALL MATERIALS AS DIRECTED BY PROJECT SPECIFICATION, PLANS, ADDENDUMS - NO EXCEPTIONS. ANY WORK AND/OR METHODS INSTALLED AND/OR CONNECTED NOT IN ACCORDANCE WITH THE ABOVE OR WITH THE APPROVAL OF THE ENGINEER WILL BE REPLACED AT CONTRACTOR'S EXPENSE.

AS-BUILT AS OF AUG. 2010

THESE AS-BUILT OR RECORD DRAWINGS HAVE BEEN PREPARED, IN PART, ON THE BASIS OF INFORMATION COMPILED AND FURNISHED BY OTHERS. THE ENGINEER WILL NOT BE RESPONSIBLE FOR ANY ERRORS OR OMISSIONS WHICH HAVE BEEN INCORPORATED INTO THIS DOCUMENT AS A RESULT.

ELECTRICAL POWER SYSTEMS E. P. S. INC.
Professional and Consulting Electrical Engineering
GARY R. OLSEN, P.E. CA. EE 8283
JOE PREVENDAR, P.E. CA. EE 16581
4049 N. FRESNO ST.
FRESNO, CA 93726
(559) 221-7230
FAX: 221-0507
gary@epsfresno.com
joe@epsfresno.com

DATE: Sep-10
JOB #: PP-08-166
PLTSCALE: 1:2
DWG. #: PP1665SL03-AB
DSGN BY: JPP DRWN BY: AVS

No.	REVISION	BY	DATE

MALAGA WWTP MODIFICATIONS
WASTEWATER TREATMENT PLANT
MALAGA COUNTY WATER DISTRICT
FRESNO COUNTY

UV DISINFECTION

ELECTRICAL SINGLE LINE

EST. 1968
PROVOST & PRITCHARD ENGINEERING GROUP
An Employee Owned Company
286 W. Cromwell Avenue
FRESNO, CALIFORNIA 93711-6162
559/449-2700 FAX 559/449-2715
www.ppeng.com

DESIGN ENGINEER: MICHAEL TAYLOR
LICENSE NO:
DRAFTED BY: DWM
CHECKED BY:
SCALE: AS SHOWN
DATE: 2-14-2008
JOB NO: 10570802
DWG. NO:
SHEET E3 OF 13

9/22/2010 3:49 PM U:\Doug McCrott\Malaga\PP1665SL03-AB.dwg

Know what's below. Call before you dig.

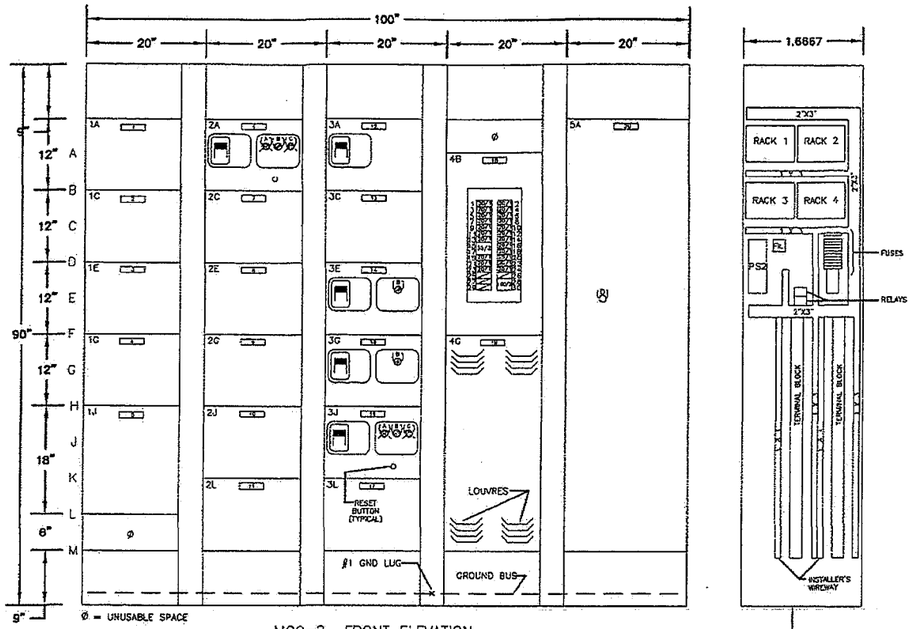

MCC-2 FRONT ELEVATION

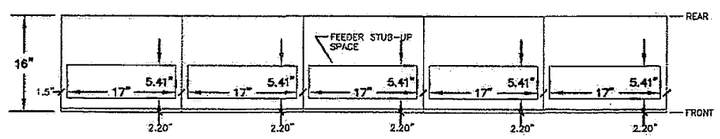

PLAN VIEW OF MCC-3 BASE

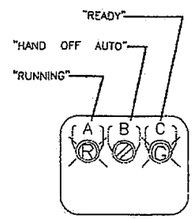

EQUIPMENT SCHEDULE										
ITEM	HMCP*	STARTER SIZE	CONTROL DEVICE	PILOT LIGHT RED	PILOT LIGHT GREEN	OVERLOAD HEATER	NOTES	No.	NAMEPLATE INSCRIPTION	STYLE
1A								1	"BLANK"	P
1C								2	"BLANK"	P
1E								3	"BLANK"	P
1G								4	"BLANK"	P
1J								5	"BLANK"	P
2A	15/3	1	HOA SW	1	1			6	SPARE	P
2C								7	"BLANK"	P
2E								8	"BLANK"	P
2G								9	"BLANK"	P
2J								10	"BLANK"	P
2L								11	"BLANK"	P
3A	70/2TM						TRANSFORMER DISC.	12	TRANSFORMER DISCONNECT	P
3C								13	"BLANK"	P
3E	30/3TM	2 C	HOA SW	1	1		UNIT HEATER	14	EUH-1 UNIT HEATER	P
3G	30/3TM	2 C	HOA SW	1	1		UNIT HEATER	15	EUH-2 UNIT HEATER	P
3J	15/3	1	HOA SW	1	1			16	PORTABLE SUMP PUMP	P
3L	N/A							17	INCOMING FEEDER TERMINATION	P
4B							30 CKT PANELBOARD	18	PANEL L 120/240V 1Ø 3W	P
4G							30 KVA TRANSFORMER	19	30 KVA 1Ø 3W TRANSFORMER	P
5A							I/O EQUIPMENT	20	REMOTE I/O 2. EQUIPMENT	P
5A			KEY SW.				INTRUSION ARM/DISARM	21	INTRUSION ALARM DISARM ARM	P

* = THERMAL MAGNETIC BREAKERS ARE MARKED TM IN SCHEDULE.
STARTERS MARKED C ARE SUPPLIED AS CONTACTORS.

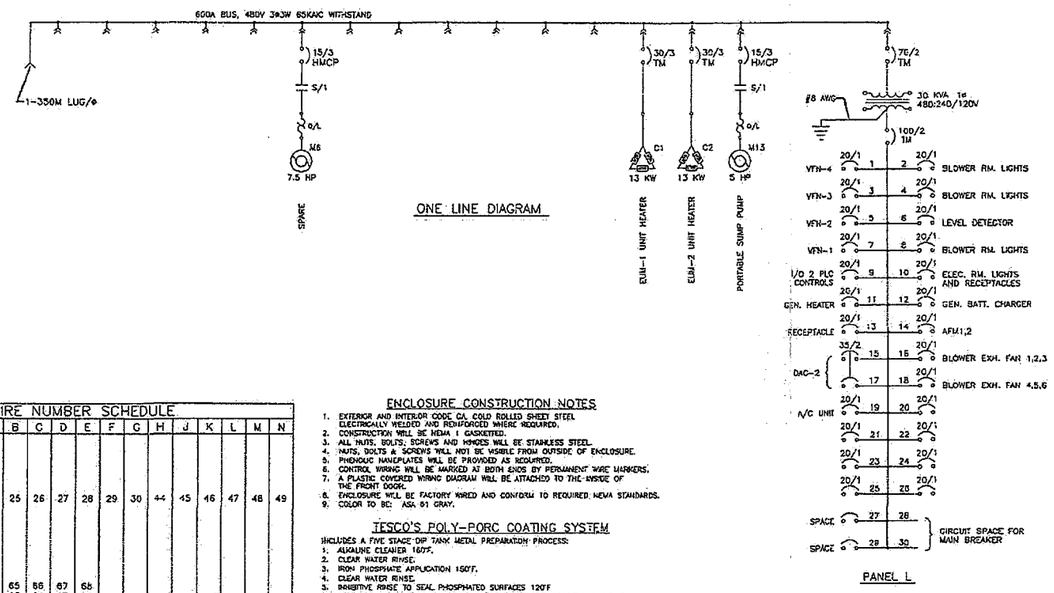

ONE LINE DIAGRAM

WIRE NUMBER SCHEDULE															
ITEM	M_	RELAY (A)	A	B	C	D	E	F	G	H	J	K	L	M	N
1A															
1C															
1E															
1G															
1J															
2A	M6	CR6	24	25	26	27	28	29	30	44	45	46	47	48	49
2C															
2E															
2G															
2J															
2L															
3A															
3C															
3E	C1		64	65	66	67	68								
3G	C2		84	85	86	87	88								
3J	M13	CR13	104	105	106	107	108	109	110	124	125	126	127	128	129

ENCLOSURE CONSTRUCTION NOTES

1. EXTERIOR AND INTERIOR CODE GA. COLD ROLLED SHEET STEEL ELECTRICALLY WELDED AND REINFORCED WHERE REQUIRED.
2. CONSTRUCTION WILL BE NEMA 1 GASKETED.
3. ALL NUTS, BOLTS, SCREWS AND WASHERS WILL BE STAINLESS STEEL.
4. NUTS, BOLTS & SCREWS WILL NOT BE VISIBLE FROM OUTSIDE OF ENCLOSURE.
5. PHENOLIC NAMEPLATES WILL BE PROVIDED AS REQUIRED.
6. CONTROL WIRING WILL BE MARKED AT BOTH ENDS BY PERMANENT WIRE MARKERS.
7. A PLASTIC COVERED WIRING DIAGRAM WILL BE ATTACHED TO THE INSIDE OF THE FRONT DOOR.
8. ENCLOSURE WILL BE FACTORY WIRED AND CONFORM TO REQUIRED NEMA STANDARDS.
9. COLOR TO BE: ASA 61 GRAY.

TESCO'S POLY-PORC COATING SYSTEM

INCLUDES A FIVE STAGE DIP TANK METAL PREPARATION PROCESS:
1. ALKALINE CLEANER 160°F.
2. CLEAN WATER RINSE.
3. IRON PHOSPHATE APPLICATION 150°F.
4. CLEAN WATER RINSE.
5. INHIBITIVE RINSE TO SEAL PHOSPHATED SURFACES 120°F

FINISHED WITH AN ELECTROSTATICALLY APPLIED DRY POLYESTER POWDER COATING THEN BAKED @ 350°F TO CURE.

48 HOURS
BEFORE EXCAVATING
CALL "USA" TOLL FREE
800-227-2600
UNDER GROUND SERVICE
ALERT

EPS IS RESPONSIBLE FOR ELECTRICAL SYSTEMS DESIGN ONLY. EPS IS NOT RESPONSIBLE FOR ELECTRICAL SAFETY WORK PROCEDURES AND/OR USE OF REQUIRED PERSONAL PROTECTIVE EQUIPMENT, SEE NFPA 70E "STANDARD FOR ELECTRICAL SAFETY IN THE WORKPLACE" AND OSHA 29 CFR.

CONTRACTOR WILL INSTALL ALL MATERIALS AS DIRECTED BY PROJECT SPECIFICATION, PLANS, ADDENDUMS - NO EXCEPTIONS. ANY WORK AND/OR METHODS INSTALLED AND/OR CONNECTED NOT IN ACCORDANCE WITH THE ABOVE OR WITH THE APPROVAL OF THE ENGINEER WILL BE REPLACED AT CONTRACTOR'S EXPENSE.

AS-BUILT AS OF AUG. 2010

THESE AS-BUILT OR RECORD DRAWINGS HAVE BEEN PREPARED, IN PART, ON THE BASIS OF INFORMATION COMPILED AND FURNISHED BY OTHERS. THE ENGINEER WILL NOT BE RESPONSIBLE FOR ANY ERRORS OR OMISSIONS WHICH HAVE BEEN INCORPORATED INTO THIS DOCUMENT AS A RESULT.

ELECTRICAL POWER SYSTEMS E. P. S. INC. Professional and Consulting Electrical Engineering

GARY R. OLSEN, P.E. CA. EE 8283
JOE PREVENDAR, P.E. CA. EE 16581

4049 N. FRESNO ST.
FRESNO, CA 93726
(559) 221-7230
FAX: 221-0507
gary@epsfresno.com
joe@epsfresno.com

DATE: Sep-10
JOB #: PP-08-166
PLTSCALE: 1:2
DWG. #: PP166SL04-AB
DSGN BY: JPP | DRWN BY: AVS

COPYRIGHT 2008 by PROVOST & PRITCHARD ENGINEERING GROUP, INC. ALL RIGHTS RESERVED
The information contained in this document is the property of Provost & Pritchard Engineering Group, Inc. It is loaned to the recipient for a specific purpose and is to be returned to Provost & Pritchard Engineering Group, Inc. upon request. It may not be used for any purpose other than that for which it is specifically loaned without the written permission of Provost & Pritchard Engineering Group, Inc. In the event of unauthorized reuse of the information, the person responsible for the unauthorized use will be liable for any damages suffered by Provost & Pritchard Engineering Group, Inc. resulting from such use. In addition, the person responsible for the unauthorized use may be subject to prosecution by Provost & Pritchard Engineering Group, Inc. to the fullest extent of the law. Recipient agrees to pay Provost & Pritchard Engineering Group, Inc. its fees and expenses in enforcing its rights hereunder, including but not limited to reasonable attorney's fees and costs, whether or not a lawsuit is filed, and if a lawsuit is filed, the costs and fees shall be those fixed by the court. Recipient also agrees to be liable for the costs of Provost & Pritchard Engineering Group, Inc.'s legal fees associated with defending any proceeding brought against Provost & Pritchard Engineering Group, Inc. by Recipient.

NO.	REVISION	BY	DATE

MALAGA WWTP MODIFICATIONS
WASTEWATER TREATMENT PLANT
MALAGA COUNTY WATER DISTRICT
FRESNO COUNTY
UV DISINFECTION

ELECTRICAL (E) MCC-2 ELEVATION

EST. 1921
PROVOST & PRITCHARD
ENGINEERING GROUP
An Employee Owned Company
286 WEST CROMWELL AVENUE
FRESNO, CALIFORNIA 93711-6162
559/449-2700 FAX 559/449-2715
www.provpritch.com

DESIGN ENGINEER: MICHAEL TAYLOR
LICENSE NO:
DRAFTED BY: DWM | CHECKED BY:
SCALE: AS SHOWN
DATE: 2-14-2008
JOB NO: 10570802
DWG. NO:
SHEET E4 OF 13

9/20/2010 3:08 PM U:\dwg m\Models\PP166SL04-AB.dwg -Doug Mitchell

Know what's below.
Call before you dig.

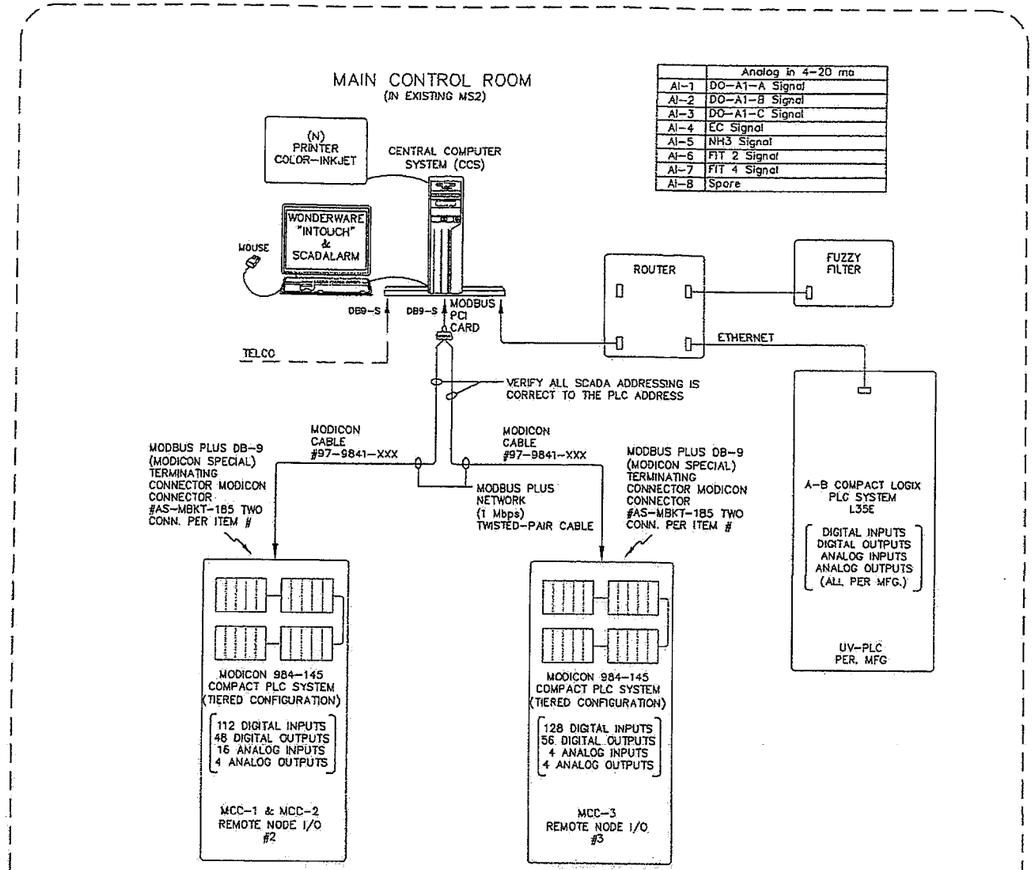

	Analog in 4-20 ma
AI-1	DO-A1-A Signal
AI-2	DO-A1-B Signal
AI-3	DO-A1-C Signal
AI-4	EC Signal
AI-5	NH3 Signal
AI-6	FIT 2 Signal
AI-7	FIT 4 Signal
AI-8	Spare

EXISTING SCADA BLOCK DIAGRAM

OUTDOOR PANEL NOTES:

1) ALL PANELS EXPOSED TO WEATHER SHALL BE MINIMUM NEMA 4X S.S. RATED.
2) ALL SECTIONS TO INCLUDE THERMOSTATICALLY CONTROLLED SPACE HEATER TO PREVENT CONDENSATION.
3) ALL SECTIONS TO INCLUDE A FLUORESCENT STRIP LIGHT FOR MAINTENANCE LIGHTING CONTROLLED BY DOOR SWITCH.
4) ALL COOLING COMPONENTS TO HAVE 100% REDUNDANT CAPACITY.
5) INSTALLATION TO INCLUDE AN OVERHANGING TOP ALUMINUM SUNSHIELD FOR ANY PANELS WITH ELECTRONIC COMPONENTS.
6) ALL VENTS AND OPENINGS TO INCLUDE RODENT AND INSECT SCREENING.
7) ENCLOSURES TO INCLUDE DUST GASKETING.
8) DOORS TO BE 3 POINT LATCHING EXTERIOR WITH NO EXPOSED CONTROLS ON THE OUTER DOOR AND PROVISIONS FOR PAD LOCK.
9) ALL COMPARTMENTS TO BE LABELED WITH LAMICOID TAGS WITH 2-S.S. SCREWS.

COPYRIGHT 2008 PROVOST & PRITCHARD
ALL RIGHTS RESERVED
The firm of Provost & Pritchard Engineering Group, Inc. retains all ownership and property rights in these plans, specifications, and other documents prepared by it. Reproduction of these documents in whole or in part by any means whatsoever, or copies of them to any other person or firm without the written consent of Provost & Pritchard Engineering Group, Inc. is the express prohibited. Any reproduction or distribution of these documents or any part thereof, without the written consent of Provost & Pritchard Engineering Group, Inc. is a violation of the U.S. Copyright laws and will be prosecuted to the fullest extent of the law. Provost & Pritchard Engineering Group, Inc. is the owner of these documents and has the exclusive rights to grant consent to reproduce them. Provost & Pritchard Engineering Group, Inc. hereby, and by your use of these documents, grants you a limited license to use these documents subject to Provost & Pritchard Engineering Group, Inc.'s legal terms established with delivery and entering these rights.

No.	REVISION	BY	DATE

MALAGA WWTP MODIFICATIONS
WASTEWATER TREATMENT PLANT
MALAGA COUNTY WATER DISTRICT
FRESNO COUNTY

UV DISINFECTION

ELECTRICAL BLOCK DIAGRAM

PROVOST & PRITCHARD
ESTD 1968
ENGINEERING GROUP
An Employee Owned Company
286 WEST CROMWELL AVENUE
FRESNO, CALIFORNIA 93711-6162
559/449-2700 FAX 559/449-2715
www.pandp.com

AS-BUILT AS OF AUG. 2010

THESE AS-BUILT OR RECORD DRAWINGS HAVE BEEN PREPARED, IN PART, ON THE BASIS OF INFORMATION COMPILED AND FURNISHED BY OTHERS. THE ENGINEER WILL NOT BE RESPONSIBLE FOR ANY ERRORS OR OMISSIONS WHICH HAVE BEEN INCORPORATED INTO THIS DOCUMENT AS A RESULT.

48 HOURS
BEFORE EXCAVATING
CALL "USA" TOLL FREE
800-227-2600
UNDER GROUND SERVICE
ALERT

EPS IS RESPONSIBLE FOR ELECTRICAL SYSTEMS DESIGN ONLY. EPS IS NOT RESPONSIBLE FOR ELECTRICAL SAFETY WORK PROCEDURES AND/OR USE OF REQUIRED PERSONAL PROTECTIVE EQUIPMENT, SEE NFPA 70E "STANDARD FOR ELECTRICAL SAFETY IN THE WORKPLACE" AND OSHA 29 CFR.

CONTRACTOR WILL INSTALL ALL MATERIALS AS DIRECTED BY PROJECT SPECIFICATION, PLANS, ADDENDUMS - NO EXCEPTIONS. ANY WORK AND/OR METHODS INSTALLED AND/OR CONNECTED NOT IN ACCORDANCE WITH THE ABOVE OR WITH THE APPROVAL OF THE ENGINEER WILL BE REPLACED AT CONTRACTOR'S EXPENSE.

ELECTRICAL POWER SYSTEMS
E. P. S. INC.
Professional and Consulting Electrical Engineering
GARY R. OLSEN, P.E. CA. EE 8283
JOE PREVENDAR, P.E. CA. EE 16581
4049 N. FRESNO ST.
FRESNO, CA 93726
(559) 221-7230
FAX: 221-0507
gary@epsfresno.com
joe@epsfresno.com

DATE: Sep-10
JOB #: PP-08-166
PLTSCALE: 1:2
DWG. #: PP166CD05-AB
DSGN BY: JPP
DRWN BY: AVS

DESIGN ENGINEER: MICHAEL TAYLOR
LICENSE NO:
DRAFTED BY: DWM
CHECKED BY:
SCALE: AS SHOWN
DATE: 2-14-2008
JOB NO: 10570802
DWG. NO:
SHEET E5 OF 13

9/20/2010 3:11 PM U:\dwg m\Malaga\PP166CD05-AB.dwg - Doug Mitchell

Know what's below. Call before you dig.

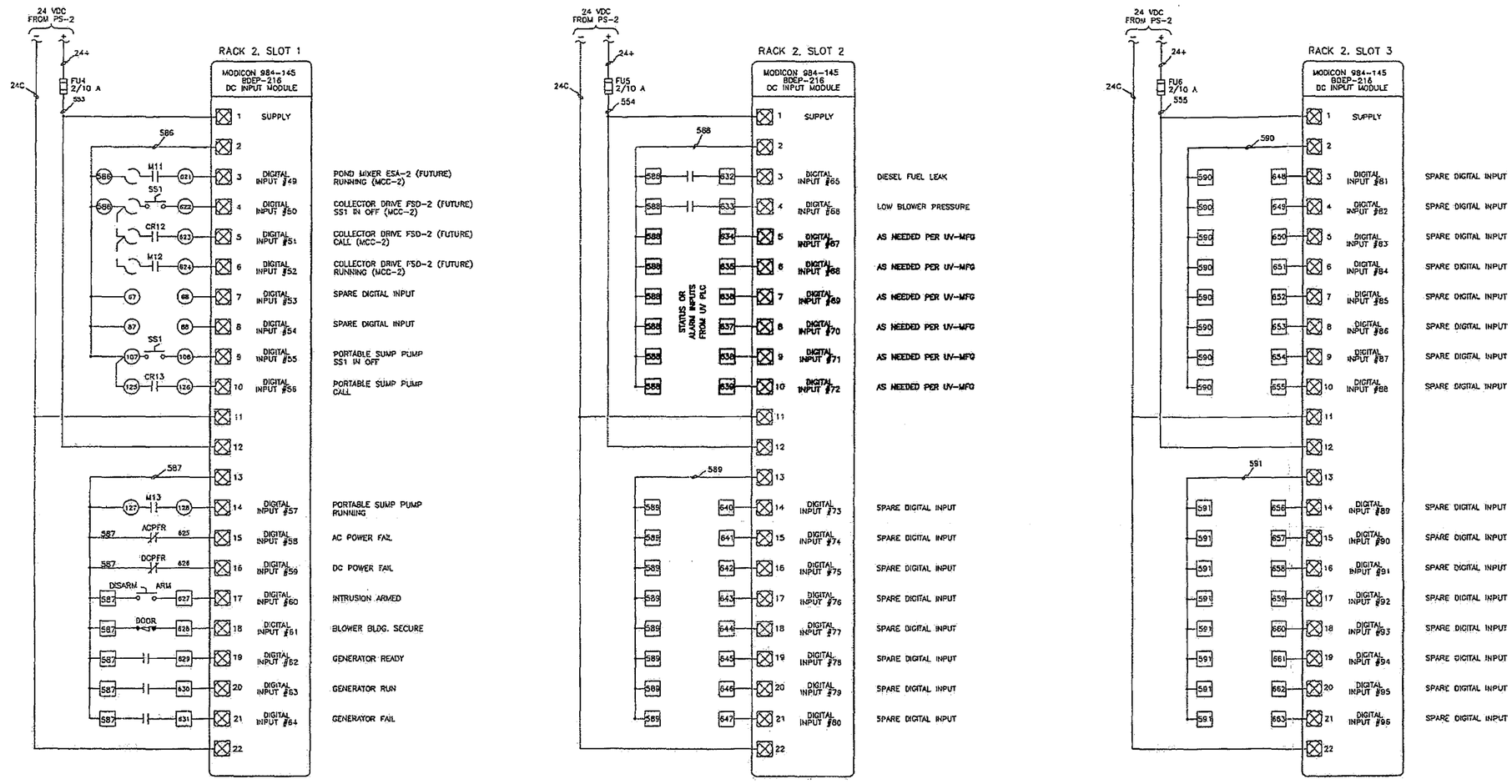

(E) SPARE PLC I/O

48 HOURS
BEFORE EXCAVATING
CALL "USA" TOLL FREE
800-227-2600
UNDER GROUND SERVICE
ALERT

EPS IS RESPONSIBLE FOR ELECTRICAL SYSTEMS DESIGN ONLY. EPS IS NOT RESPONSIBLE FOR ELECTRICAL SAFETY WORK PROCEDURES AND/OR USE OF REQUIRED PERSONAL PROTECTIVE EQUIPMENT. SEE NFPA 70E "STANDARD FOR ELECTRICAL SAFETY IN THE WORKPLACE" AND OSHA 29 CFR.

CONTRACTOR WILL INSTALL ALL MATERIALS AS DIRECTED BY PROJECT SPECIFICATION, PLANS, ADDENDUMS - NO EXCEPTIONS. ANY WORK AND/OR METHODS INSTALLED AND/OR CONNECTED NOT IN ACCORDANCE WITH THE ABOVE OR WITH THE APPROVAL OF THE ENGINEER WILL BE REPLACED AT CONTRACTOR'S EXPENSE.

ELECTRICAL POWER SYSTEMS E. P. S. INC. Professional and Consulting Electrical Engineering
GARY R. OLSEN, P.E. — CA. EE 8283
JOE PREVENDAR, P.E. — CA. EE 16581
4049 N. FRESNO ST.
FRESNO, CA 93726
(559) 221-7230
FAX: 221-0507
gary@epsfresno.com
joe@epsfresno.com

DATE: Sep-10
JOB #: PP-08-186
PLTSCALE: 1:2
DWG. #: PP166PLC06-AB
DSGN BY: JPP | DRWN BY: AVS

AS-BUILT AS OF AUG. 2010

THESE AS-BUILT OR RECORD DRAWINGS HAVE BEEN PREPARED, IN PART, ON THE BASIS OF INFORMATION COMPILED AND FURNISHED BY OTHERS. THE ENGINEER WILL NOT BE RESPONSIBLE FOR ANY ERRORS OR OMISSIONS WHICH HAVE BEEN INCORPORATED INTO THIS DOCUMENT AS A RESULT.

No.	REVISION	BY	DATE

MALAGA WWTP MODIFICATIONS
WASTEWATER TREATMENT PLANT
MALAGA COUNTY WATER DISTRICT
FRESNO COUNTY
UV DISINFECTION
ELECTRICAL PLC I/O

EST. 1968 PROVOST & PRITCHARD ENGINEERING GROUP
An Employee Owned Company
286 WEST DUNCAN AVENUE
FRESNO, CALIFORNIA 93704-1812
559/449-2700 FAX 559/449-2715
www.provpritch.com

DESIGN ENGINEER: MICHAEL TAYLOR
LICENSE NO:
DRAFTED BY: DWM | CHECKED BY:
SCALE: AS SHOWN
DATE: 2-14-2008
JOB NO: 10570502
DWG. NO:
SHEET E6 OF 13

COPYRIGHT © 2008 PROVOST & PRITCHARD ENGINEERING GROUP
The work of Provost & Pritchard Engineering Group, including but not limited to, the plans, specifications and other documents, is protected by copyright in favor of Provost & Pritchard. Such work may not be used, copied, or reproduced in whole or in part without our express written consent. These plans are not to be reproduced, changed, or copied in any form or manner whatsoever, nor are they to be assigned to a third party without first obtaining the firm's express written permission and release. In the event of unauthorized reuse of these plans by a third party, the third party agrees to hold Provost & Pritchard Engineering Group, Inc. harmless, and shall bear the cost of Provost & Pritchard's reasonable attorney's fees and other expenses related to defending and enforcing these rights.

0/20/2010 3:10 PM V:\drwg m\Voldgrp\PP166PLC06-AB.dwg - Doug Marshall

Know what's below. Call before you dig.

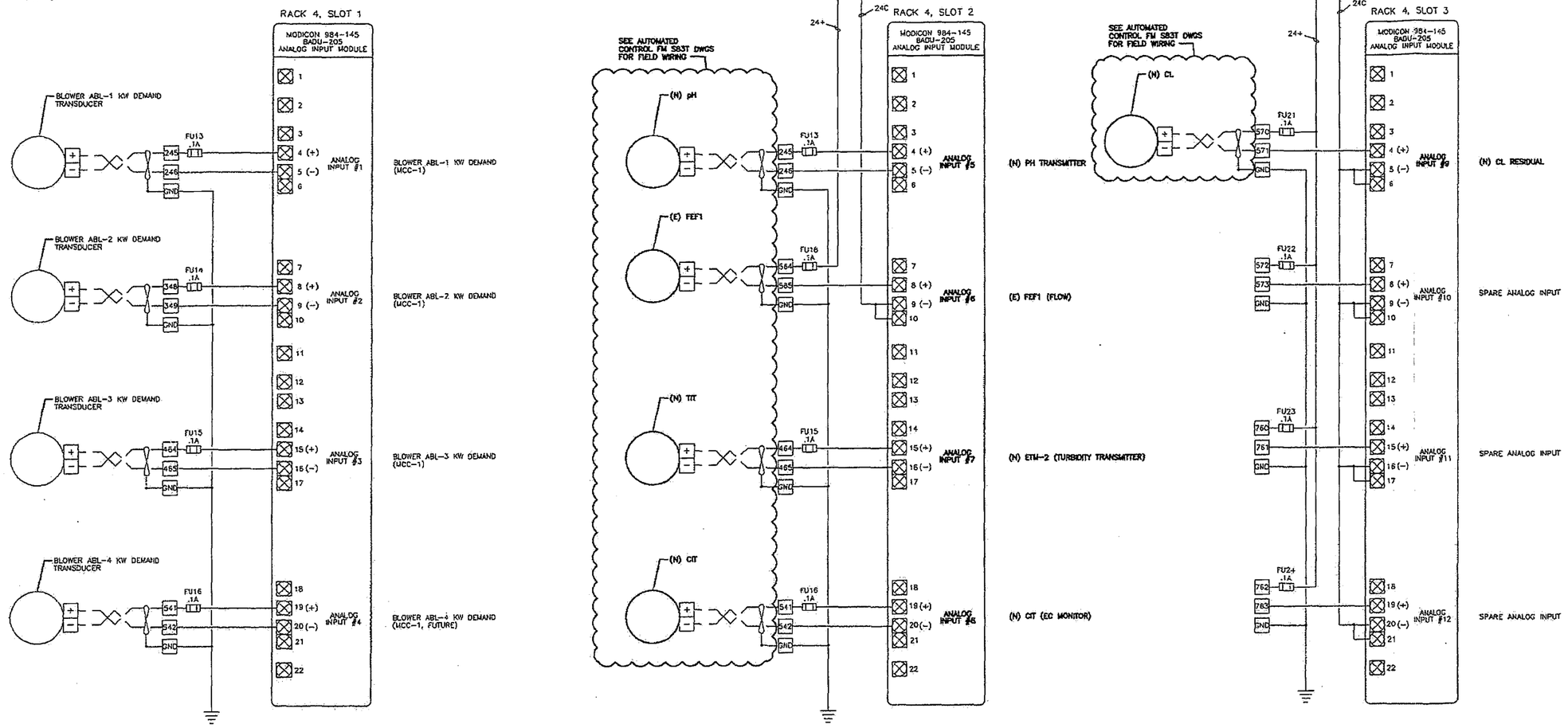

(E) SPARE PLC I/O

AS-BUILT AS OF AUG. 2010

THESE AS-BUILT OR RECORD DRAWINGS HAVE BEEN PREPARED, IN PART, ON THE BASIS OF INFORMATION COMPILED AND FURNISHED BY OTHERS. THE ENGINEER WILL NOT BE RESPONSIBLE FOR ANY ERRORS OR OMISSIONS WHICH HAVE BEEN INCORPORATED INTO THIS DOCUMENT AS A RESULT.

48 HOURS
BEFORE EXCAVATING
CALL "USA" TOLL FREE
800-227-2600
UNDER GROUND SERVICE
ALERT

EPS IS RESPONSIBLE FOR ELECTRICAL SYSTEMS DESIGN ONLY. EPS IS NOT RESPONSIBLE FOR ELECTRICAL SAFETY WORK PROCEDURES AND/OR USE OF REQUIRED PERSONAL PROTECTIVE EQUIPMENT, SEE NFPA 70E "STANDARD FOR ELECTRICAL SAFETY IN THE WORKPLACE" AND OSHA 29 CFR.

CONTRACTOR WILL INSTALL ALL MATERIALS AS DIRECTED BY PROJECT SPECIFICATION, PLANS, ADDENDUMS - NO EXCEPTIONS. ANY WORK AND/OR METHODS INSTALLED AND/OR CONNECTED NOT IN ACCORDANCE WITH THE ABOVE OR WITH THE APPROVAL OF THE ENGINEER WILL BE REPLACED AT CONTRACTOR'S EXPENSE.

ELECTRICAL POWER SYSTEMS P.S. INC. Professional and Consulting Electrical Engineering
GARY R. OLSEN, P.E. CA. EE 8283
JOE PREVENDAR, P.E. CA. EE 16581
4049 N. FRESNO ST.
FRESNO, CA 93726
(559) 221-7230
FAX: 221-0507
gary@epsfresno.com
joe@epsfresno.com

DATE: Sep-10
JOB #: PP-08-166
PLTSCALE: 1:2
DWG. #: PP166PLC07-AB
DSGN BY: JPP | DRWN BY: AVS

DESIGNED, DRAWN & PREPARED UNDER MY DIRECTION AND BELIEF AT THE TIME SHOWN. I, THE UNDERSIGNED, AM THE OWNER OF THE INFORMATION SHOWN ON THIS DRAWING AND OTHER CAPITALIZED PROPERTY RIGHTS IN THESE PLANS. THESE PLANS ARE NOT TO BE REPRODUCED, CHANGED OR COPIED IN ANY FORM OR MANNER WHATSOEVER, NOR ARE THEY TO BE ASSIGNED TO A THIRD PARTY, WITHOUT FIRST OBTAINING THE EXPRESSED WRITTEN CONSENT OF PROVOST & PRITCHARD ENGINEERING GROUP, INC. IN THE EVENT OF UNAUTHORIZED REUSE OF THESE PLANS BY A THIRD PARTY, THE THIRD PARTY AGREES TO HOLD PROVOST & PRITCHARD ENGINEERING GROUP, INC. HARMLESS, AND THAT PROVOST & PRITCHARD ENGINEERING GROUP, INC. WILL SEEK TO PROTECT ITS LEGAL RIGHTS ASSOCIATED WITH REUSING THESE RIGHTS.

No.	REVISION	BY	DATE

MALAGA WWTP MODIFICATIONS
WASTEWATER TREATMENT PLANT
MALAGA COUNTY WATER DISTRICT
FRESNO COUNTY
UV DISINFECTION
ELECTRICAL PLC I/O

EST. 1968 PROVOST & PRITCHARD ENGINEERING GROUP
An Employee Owned Company
286 W. CHERRY LANE, 93711-6162
FRESNO, CALIFORNIA 93711-6162
559/449-2700 FAX: 559/449-2715
www.ppeng.com

DESIGN ENGINEER: MICHAEL TAYLOR
LICENSE NO:
DRAFTED BY: DWM | CHECKED BY:
SCALE: AS SHOWN
DATE: 2-14-2008
JOB NO: 10570802
DWG. NO:
SHEET E7 OF 13

9/20/2010 3:08 PM U:\Jobs m\Malaga2\PP166PLC07-AB.dwg -Doug Mastelli

Know what's below. Call before you dig.

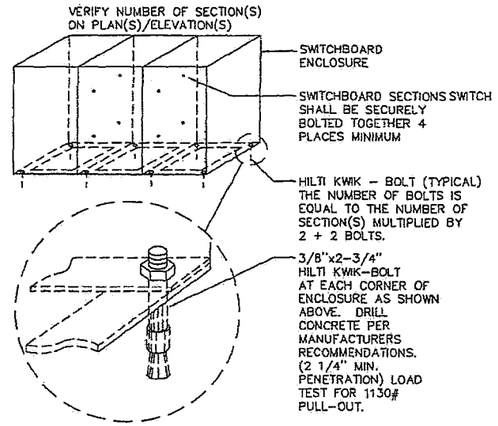

PANEL MOUNTING DETAIL

NOT TO SCALE

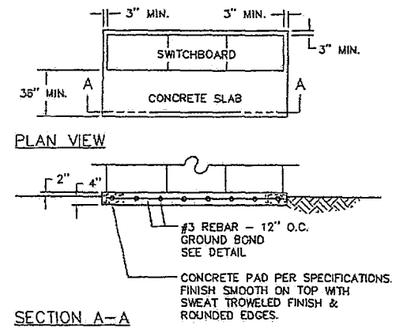

PANEL SLAB DETAIL

NOT TO SCALE

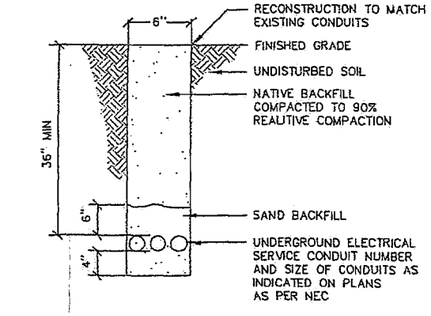

TRENCH SECTION

NOT TO SCALE

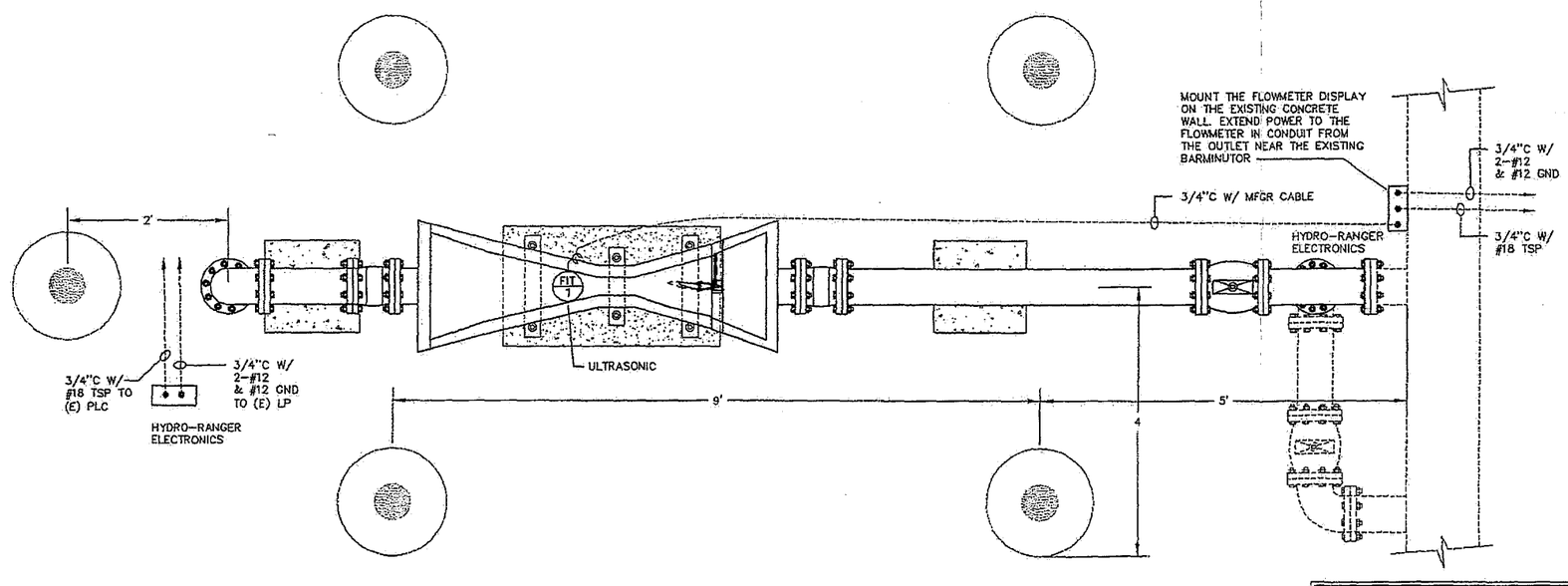

PARSHALL FLUME FLOW METER

NOT TO SCALE

AS-BUILT AS OF AUG. 2010

THESE AS-BUILT OR RECORD DRAWINGS HAVE BEEN PREPARED, IN PART, ON THE BASIS OF INFORMATION COMPILED AND FURNISHED BY OTHERS. THE ENGINEER WILL NOT BE RESPONSIBLE FOR ANY ERRORS OR OMISSIONS WHICH HAVE BEEN INCORPORATED INTO THIS DOCUMENT AS A RESULT.

48 HOURS
BEFORE EXCAVATING
CALL "USA" TOLL FREE
800-227-2600
UNDER GROUND SERVICE
ALERT

EPS IS RESPONSIBLE FOR ELECTRICAL SYSTEMS DESIGN ONLY. EPS IS NOT RESPONSIBLE FOR ELECTRICAL SAFETY WORK PROCEDURES AND/OR USE OF REQUIRED PERSONAL PROTECTIVE EQUIPMENT, SEE NFPA 70E "STANDARD FOR ELECTRICAL SAFETY IN THE WORKPLACE" AND OSHA 29 CFR.

CONTRACTOR WILL INSTALL ALL MATERIALS AS DIRECTED BY PROJECT SPECIFICATION, PLANS, ADDENDUMS – NO EXCEPTIONS. ANY WORK AND/OR METHODS INSTALLED AND/OR CONNECTED NOT IN ACCORDANCE WITH THE ABOVE OR WITH THE APPROVAL OF THE ENGINEER WILL BE REPLACED AT CONTRACTORS EXPENSE.

ELECTRICAL POWER SYSTEMS E. P. S. INC. Professional and Consulting Electrical Engineering
GARY R. OLSEN, P.E. CA. EE 8283
JOE PREVENDAR, P.E. CA. EE 16581
4049 N. FRESNO ST.
FRESNO, CA 93726
(559) 221-7230
FAX: 221-0507
gary@epsfresno.com
joe@epsfresno.com

DATE: Sep-10
JOB #: PP-08-166
PLTSCALE: 1:2
DWG. #: PP166DT08-A8
DSGN BY: JPP | DRWN BY: AVS

No.	REVISION	BY	DATE

MALAGA WWTP MODIFICATIONS
WASTEWATER TREATMENT PLANT
MALAGA COUNTY WATER DISTRICT
FRESNO COUNTY
UV DISINFECTION

ELECTRICAL DETAILS

ESTD 1958
PROVOST & PRITCHARD
ENGINEERING GROUP, INC.
An Employee Owned Company
286 WEST CROWELL AVENUE
FRESNO, CALIFORNIA 93711-6162
559/449-2700 FAX 559/449-2715
www.ppeng.com

DESIGN ENGINEER: MICHAEL TAYLOR
LICENSE NO:
DRAFTED BY: DWW | CHECKED BY:
SCALE: AS SHOWN
DATE: 2-14-2008
JOB NO: 10570802
DWG NO:
SHEET E8 OF 13

9/23/2010 2:10 PM U:\doug m\Malaga\PP166DT08-A8.dwg -Doug Vostrejs

MALAGA COUNTY
UV DISINFECTION
INSTRUMENTATION PANEL

Table of Contents

Page	DESCRIPTION
01	Table of Contents
02	Cabinet Layout
03	Back Panel Layout
04	Discrete Inputs
05	Analog Inputs
06	pH Meter Loop Diagram
07	Flowmeter Loop Diagram
08	Turbidimeter Loop Diagram
09	Conductivity Meter Loop Diagram
10	Chlorine Meter Loop Diagram
11	Legend
12	

REFERENCE DRAWINGS	REV. NO.	DATE	DESCRIPTION	REV. BY	CKD. BY	APP'D	REV. NO.	DATE	DESCRIPTION	REV. BY	CKD. BY	APP'D

Automated Control AND TECHNICAL SERVICES
4545 N. Brawley, Suite 105
Fresno, California 93722
TEL. (559) 277-3488
FAX (559) 277-3493

NOTICE

This dwg is prepared by A-C Electric Company for its sole use as a design-build electrical contractor in the presentation, budgeting and installation phases of the subject project. This dwg is only a schematic representation of the electrical work and its use by others is prohibited and no liability is assumed for any unauthorized use.

DRAWN BY:	WVK.	DATE: 10/23/2008
REVIEWED BY:	WVK.	DATE: 10/23/2008
CHECKED BY:	L.A.H.	DATE: 10/23/2008
PROJ. ENGINEER:		DATE:
APPROVED BY:		DATE:

MALAGA_COUNTY
UV_DISINFECTION
INSTRUMENTATION_PANEL

SCALE:	DWG NO:	SHT.	REV. NO.
NA	FM583T-01	1	

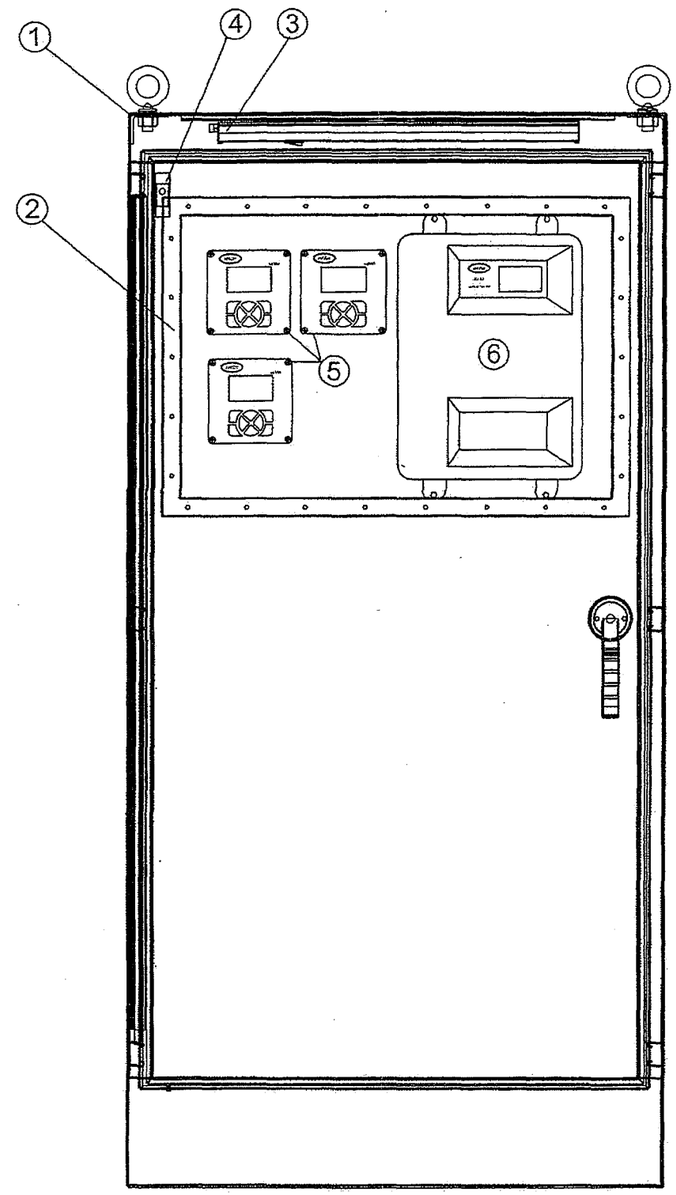

Bill of Materials

No.	Qty.	Manufacturer	Part Number	Description
1	1	Hoffman	A723618SSFSN4	SS Free standing Nema 4x Enclosure
2	1	Hoffman	APWK2919NFSS	SS Window Kit
3	1	Hoffman	ALF16M24R	Florescent Light
4	1	Hoffman	ALFSWD	Remote Switch For Florescent Light
5	3	Hach	LXV401.52.00002	sc100 Standard Controller
6	1	Hach	5440002	CL17 Chlorine Analyzer

REFERENCE DRAWINGS	REV. NO.	DATE	DESCRIPTION	REV. BY	CKD. BY	APP'D	REV. NO.	DATE	DESCRIPTION	REV. BY	CKD. BY	APP'D

Automated Control AND TECHNICAL SERVICES
4546 N. Brawley, Suite 105
Fresno, California 93722
TEL. (559) 277-3488
FAX (559) 277-3493

NOTICE
This dwg is prepared by A-C Electric Company for its sole use as a design-build electrical contractor in the presentation, budgeting and installation phases of the subject project. This dwg is only a schematic representation of the electrical work and its use by others is prohibited and no liability is assumed for any unauthorized use.

DRAWN BY	DRW
DATE	11/17/2008
DESIGNED BY	
CHECKED BY	
PROJ. ENGINEER	
APPROVED BY	

MALAGA COUNTY
UV DISINFECTION
INTRUMENTATION PANEL LAYOUT

SCALE	DWG NO.	SHT.	REV. NO.
NONE	FM583T-02	2	

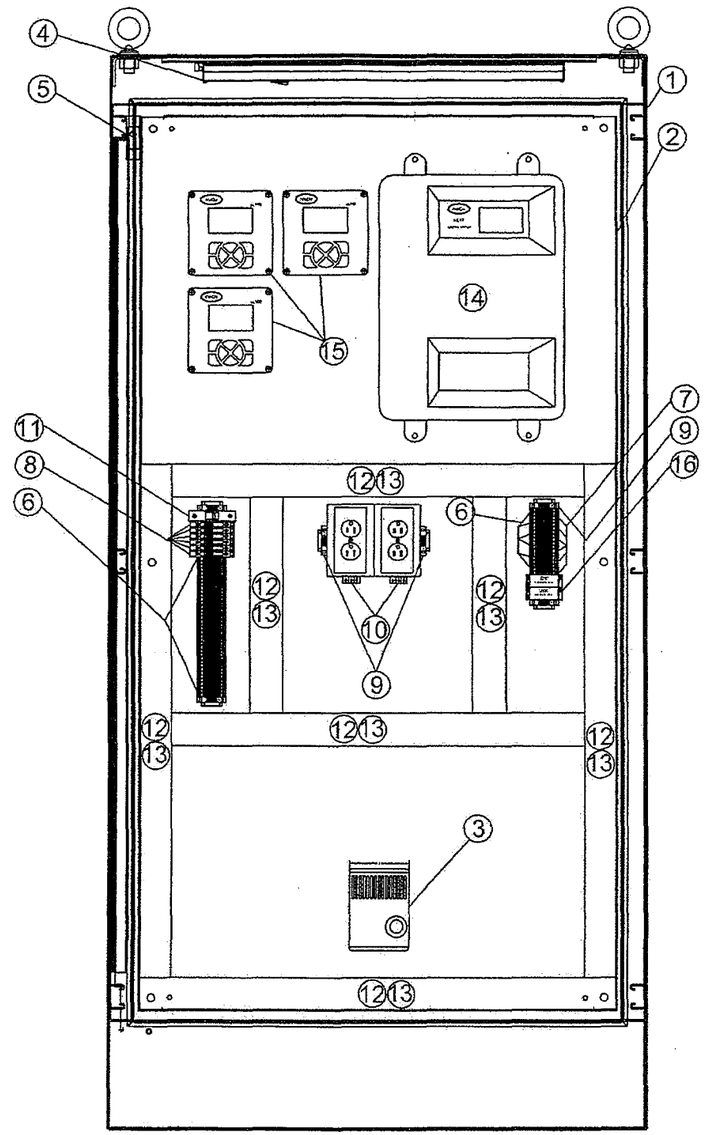

Bill of Materials

No.	Qty.	Manufacturer	Part Number	Description
1	1	Hoffman	A723618SSFSN4	SS Free standing Nema 4x Enclosure
2	1	Hoffman	A72P36F1	Enclosure back panel
3	1	Hoffman	DAH1001A	Enclosure Heater
4	1	Hoffman	ALF16M24R	Florescent Light
5	1	Hoffman	ALFSWD	Remote Switch For Florescent Light
6	30	Phoenix Contact	UT4	Terminal Block
7	6	Phoenix Contact	UT4-PE	Ground Terminal Block
8	6	Phoenix Contact	UK 5-HESILA	Fusing Block 120V
9	6	Phoenix Contact	E/NS 35 N	Din rail end barrier
10	2	Hubbell	DRUBGFI20	GFCI Din Rail Receptacle
11	1	Allen Bradley	1489-A1C050	5 amp Circuit Breaker
12	16'	Panduit	F2X4LG6	2"x4" Panduit
13	16'	Panduit	C2LG6	2" Panduit Cover
14	1	Hach	5440002	CL17 Chlorine Analyzer
15	3	Hach	LXV401.52.00002	sc100 Standard Contoller
16	2	Moore Industries	ECT/4-20MA/2X4-20MA/117AC	Splitter

REFERENCE DRAWINGS	REV. NO.	DATE	DESCRIPTION	REV. BY	CKD. BY	APP'D	REV. NO.	DATE	DESCRIPTION	REV. BY	CKD. BY	APP'D

Automated Control AND TECHNICAL SERVICES
4545 N. Brawley, Suite 105
Fresno, California 93722
TEL. (559) 277-3488
FAX (559) 277-3493

NOTICE

This dwg is prepared by A-C Electric Company for its sole use as a design-build electrical contractor in the presentation, bidding and installation phases of the subject project. This dwg is only a schematic representation of the electrical work and its use by others is prohibited and no liability is assumed for any unauthorized use.

DRAWN BY: DRM	DATE: 11/17/2008
DESIGNED BY:	DATE:
CHECKED BY:	DATE:
PROJ. ENGINEER:	DATE:
APPROVED BY:	DATE:

MALAGA COUNTY
UV DISINFECTION
INTRUMENTATION PANEL LAYOUT

SCALE:	DWG NO.	SHT.	REV. NO.
NONE	FM583T-03	3	

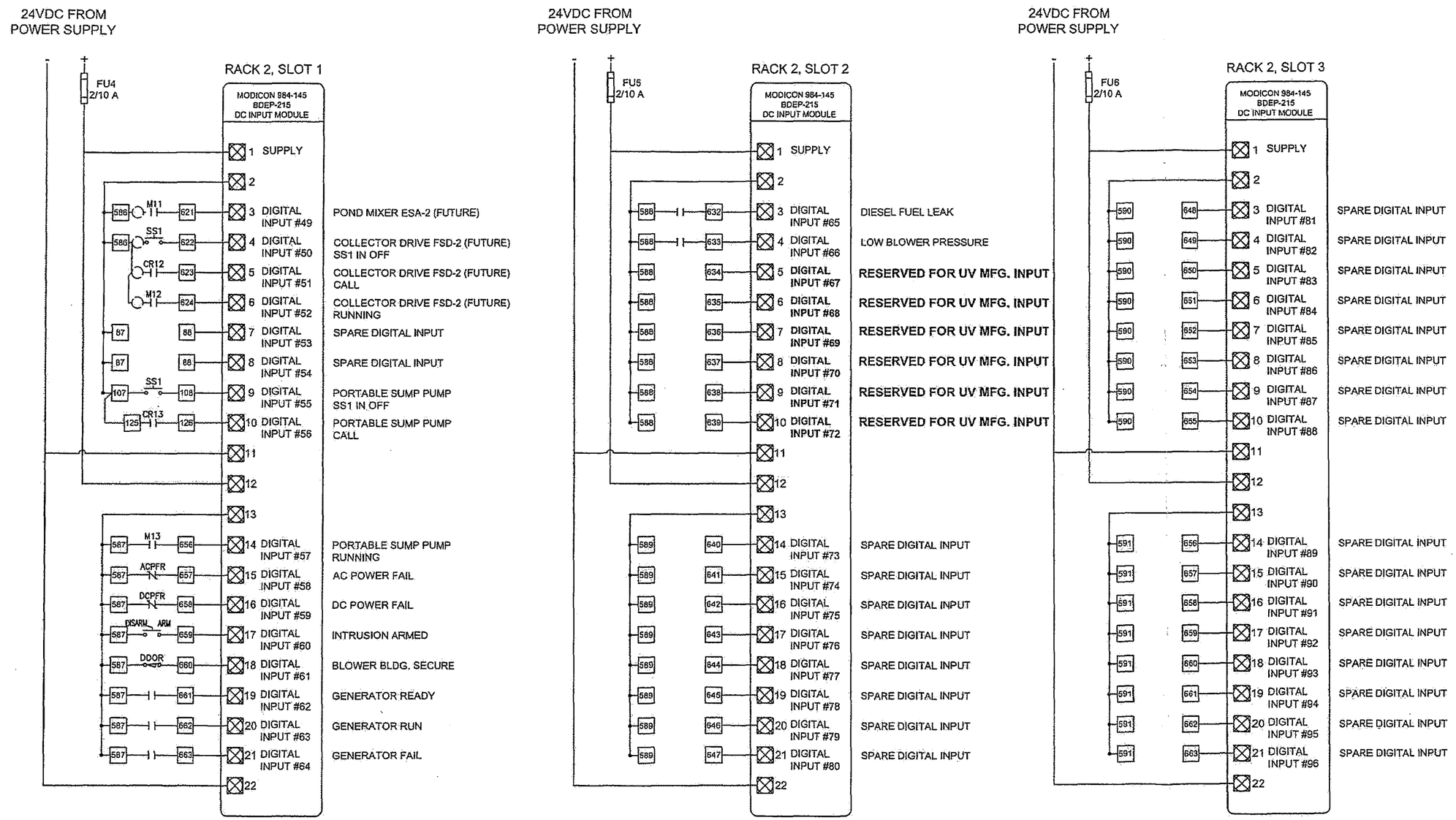

NOTE : ALL MODULES SHOWN ARE EXISTING AND NEW INPUTS ARE SHOWN IN "BOLD"

REFERENCE DRAWINGS	REV. NO.	DATE	DESCRIPTION	REV. BY	CKD. BY	APP'D	REV. NO.	DATE	DESCRIPTION	REV. BY	CKD. BY	APP'D

Automated Control AND TECHNICAL SERVICES
4545 N. Brawley, Suite 105
Fresno, California 93722
TEL. (559) 277-3488
FAX (559) 277-3493

NOTICE
This dwg is prepared by A-C Electric Company for its sole use as a design-build electrical contractor in the presentation, budgeting and installation phases of the subject project. This dwg is only a schematic representation of the electrical work and its use by others is prohibited and no liability is assumed for any unauthorized use.

DRAWN BY: DRM	DATE: 11/28/08	MALAGA COUNTY WWTP MODIFICATIONS UV DISINFECTION DISCRETE INPUTS
DESIGNED BY:	DATE:	
CHECKED BY:	DATE:	
FIELD ENGINEER:	DATE:	
APPROVED BY:	DATE:	

SCALE	DWG NO.	SHT.	REV. NO.
NONE	FM583T-04	4	

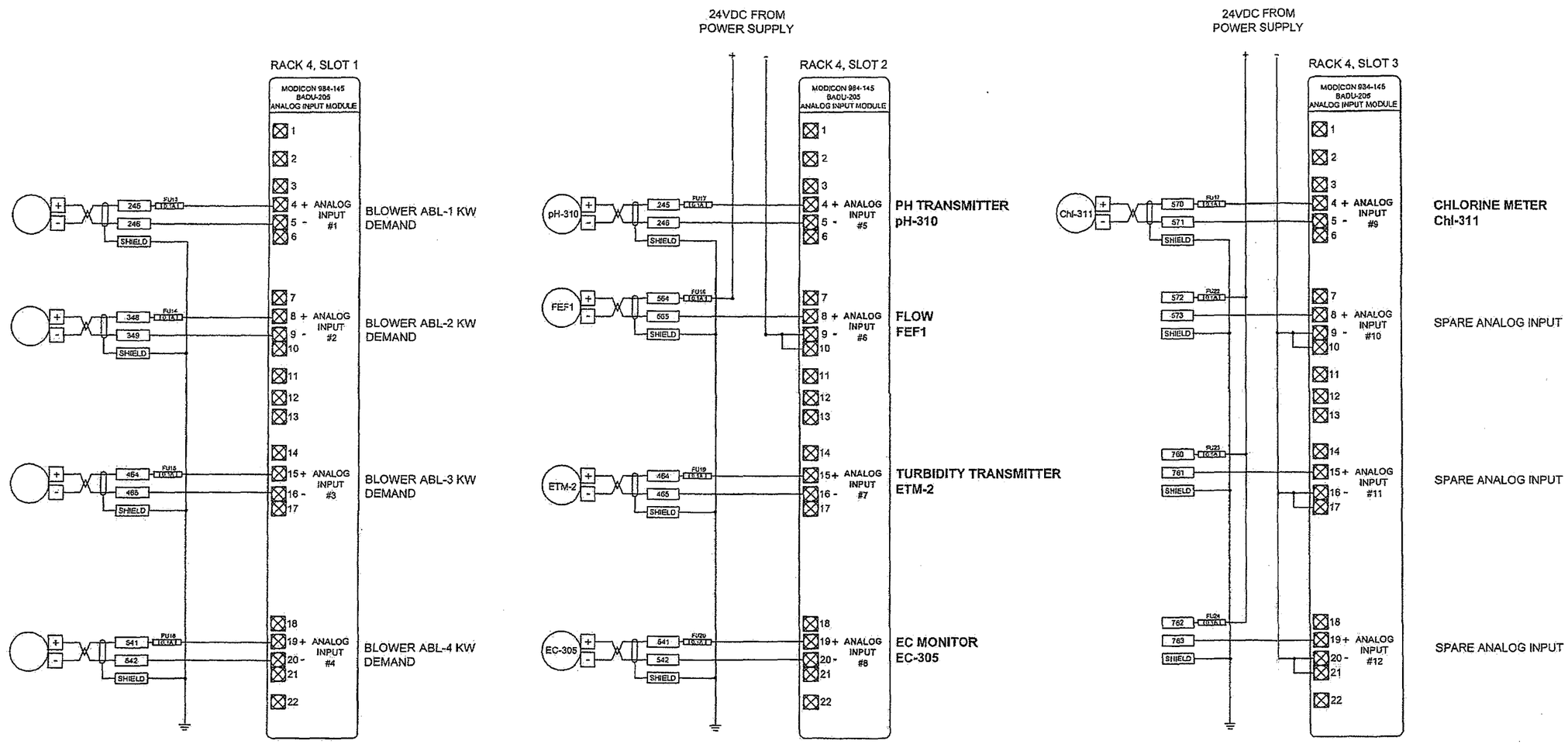

NOTE : ALL MODULES SHOWN ARE EXISTING AND NEW INPUTS ARE SHOWN IN "BOLD"

REFERENCE DRAWINGS	REV. NO.	DATE	DESCRIPTION	REV. BY	CKD. BY	APP'D	REV. NO.	DATE	DESCRIPTION	REV. BY	CKD. BY	APP'D

Automated Control AND TECHNICAL SERVICES
4545 N. Brawley, Suite 105
Fresno, California 93722
TEL. (559) 277-3488
FAX (559) 277-3493

NOTICE

This dwg is prepared by A-C Electric Company for its sole use as a design-build electrical contractor in the presentation, budgeting and installation phases of the subject project. This dwg is only a schematic representation of the electrical work and its use by others is prohibited and no liability is assumed for any unauthorized use.

DRAWN BY:	DRM
DATE:	11/20/08
DESIGNED BY:	
DATE:	
CHECKED BY:	
DATE:	
PROJ. ENGINEER:	
DATE:	
APPROVED BY:	
DATE:	

MALAGA COUNTY WWTP MODIFICATIONS
UV DISINFECTION
ANALOG INPUTS

SCALE:	DWG. NO.	SHT.	REV. NO.
NONE	FM583T-05	5	

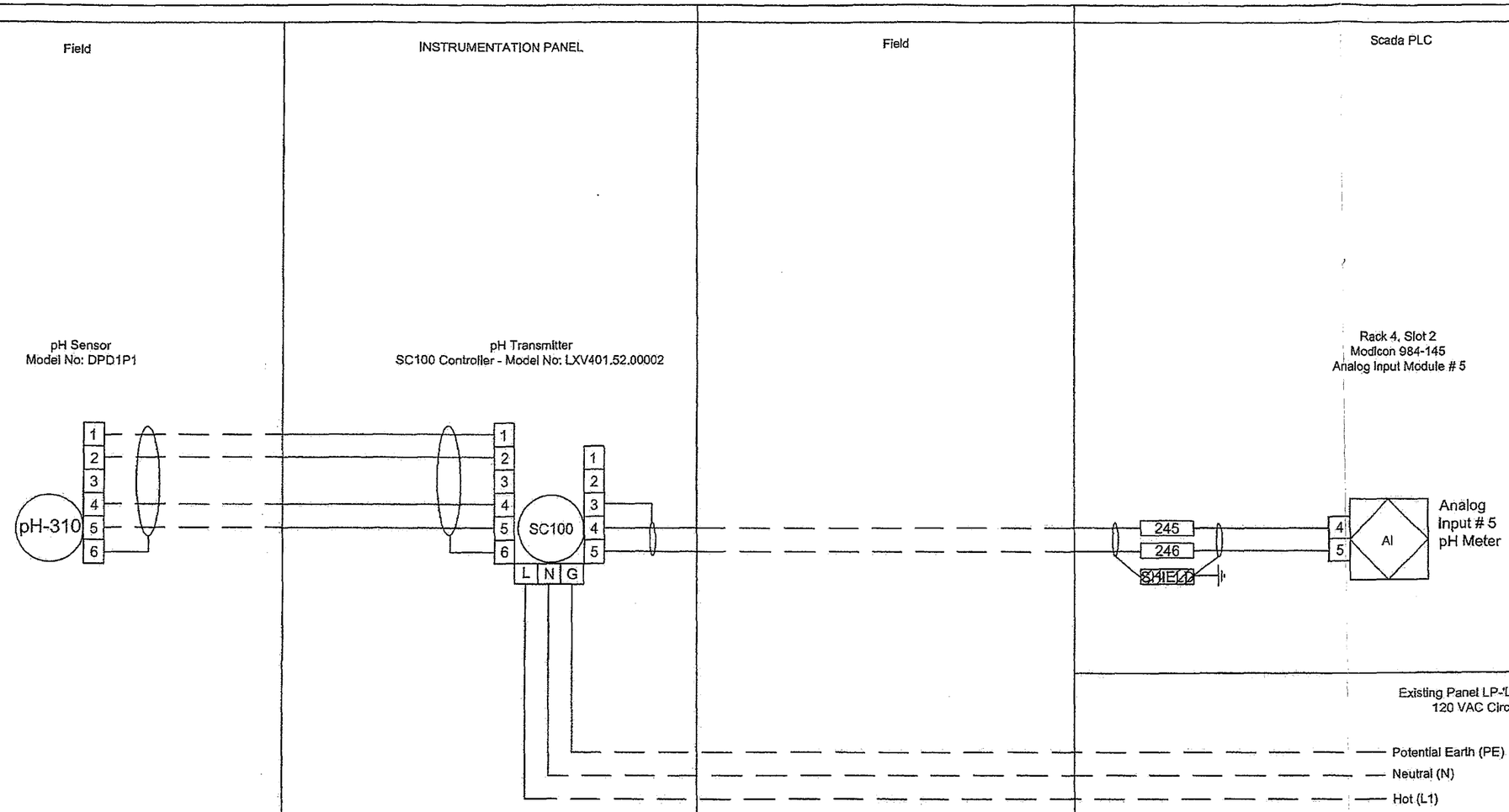

REFERENCE DRAWINGS	REV. NO.	DATE	DESCRIPTION	REV. BY	CKD. BY	APP'D	REV. NO.	DATE	DESCRIPTION	REV. BY	CKD. BY	APP'D

Automated Control AND TECHNICAL SERVICES
4545 N. Brawley, Suite 105
Fresno, California 93722
TEL. (559) 277-3488
FAX (559) 277-3493

NOTICE
This dwg is prepared by A-C Electric Company for its sole use as a design-build electrical contractor in the presentation, budgeting and installation phases of the subject project. This dwg is only a schematic representation of the electrical work and its use by others is prohibited and no liability is assumed for any unauthorized use.

DRAWN BY:	DATE: 11/28/08	
REVIEWED BY:	DATE:	
CHECKED BY:	DATE:	
PROJ. ENGINEER:	DATE:	
APPROVED BY:	DATE:	

MALAGA COUNTY WWTP MODIFICATIONS
UV DISINFECTION
LOOP DIAGRAM pH METER

SCALE:	DWG NO.	SHT.	REV. NO.
NONE	FM583T-06	6	

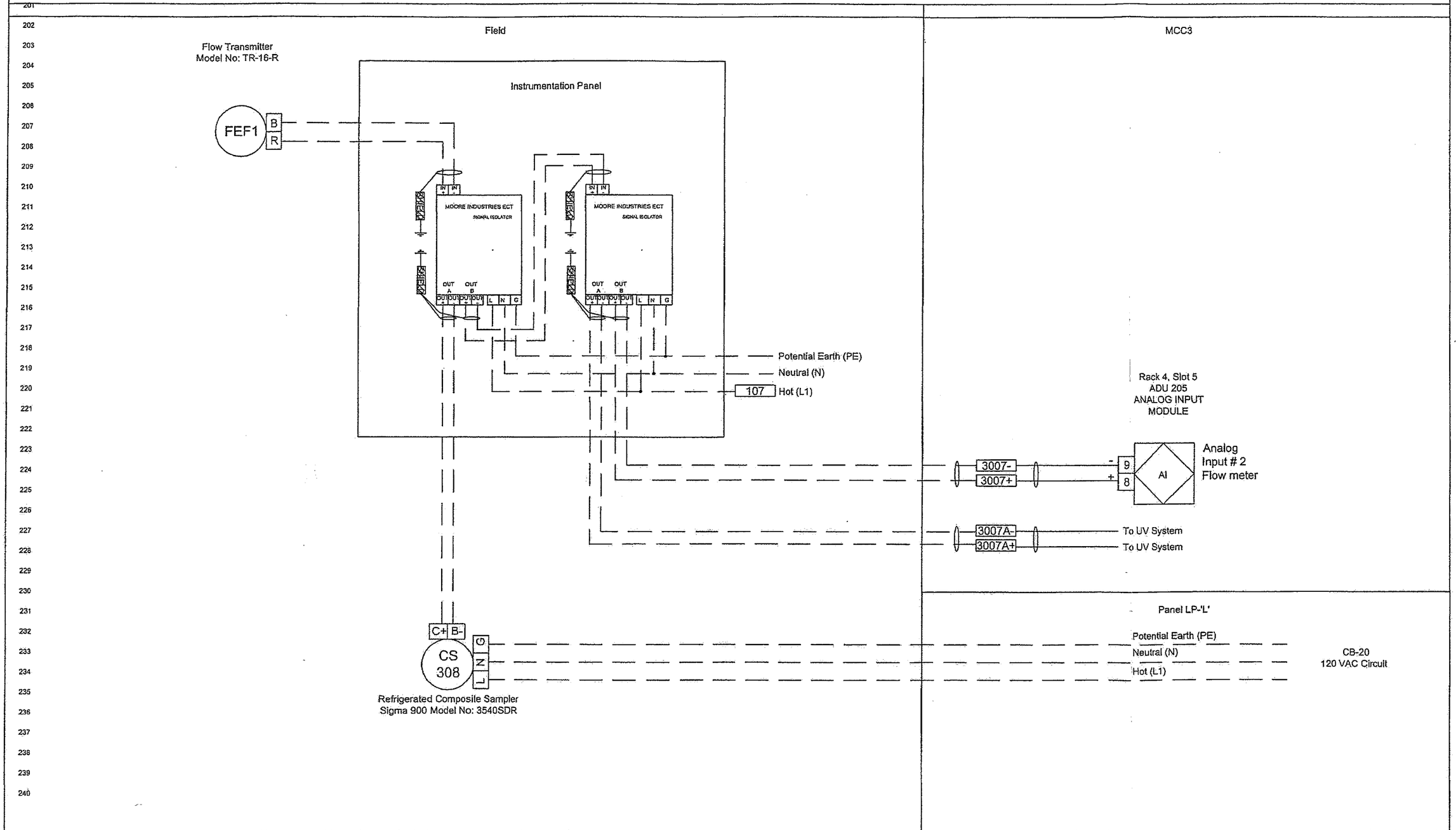

REFERENCE DRAWINGS	REV. NO.	DATE	DESCRIPTION	REV. BY	CKD. BY	APP'D	REV. NO.	DATE	DESCRIPTION	REV. BY	CKD. BY	APP'D

Automated Control AND TECHNICAL SERVICES
4545 N. Brawley, Suite 105
Fresno, California 93722
TEL. (559) 277-3488
FAX (559) 277-3493

NOTICE
This dwg is prepared by A-C Electric Company for its sole use as a design-build electrical contractor in the presentation, bidgeting and installation phases of the subject project. This dwg is only a schematic representation of the electrical work and its use by others is prohibited and no liability is assumed for any unauthorized use.

DRAWN BY: DRM	DATE: 11/28/08
DESIGNED BY:	DATE:
CHECKED BY:	DATE:
FIELD ENGINEER:	DATE:
APPROVED BY:	DATE:

MALAGA COUNTY WWTP MODIFICATIONS
UV DISINFECTION
LOOP DIAGRAM FLOWMETER FEF1

SCALE:	DWG NO:	SHT:	REV. NO.
NONE	FM583T-07	7	

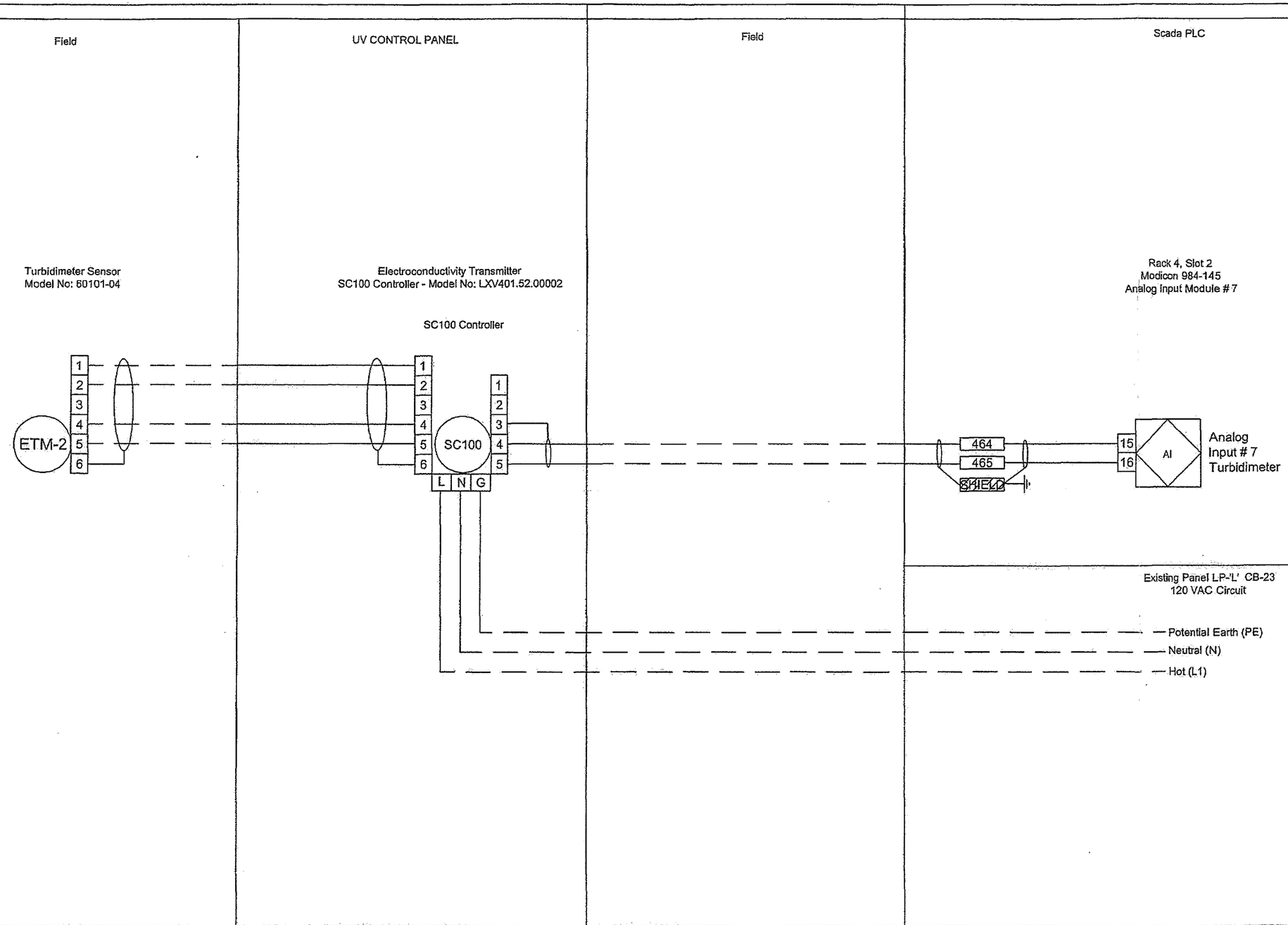

REFERENCE DRAWINGS	REV. NO.	DATE	DESCRIPTION	REV. BY	CKD. BY	APP'D	REV. NO.	DATE	DESCRIPTION	REV. BY	CKD. BY	APP'D

Automated Control AND TECHNICAL SERVICES
4545 N. Brawley, Suite 105
Fresno, California 93722
TEL. (559) 277-3488
FAX (559) 277-3493

NOTICE

This dwg is prepared by A-C Electric Company for its sole use as a design-build electrical contractor in the presentation, budgeting and installation phases of the subject project. This dwg is only a schematic representation of the electrical work and its use by others is prohibited and no liability is assumed for any unauthorized use.

DRAWN BY: DRM	DATE: 11/28/08	
DESIGNED BY:	DATE:	
CHECKED BY:	DATE:	
PROJ. ENGINEER:	DATE:	
APPROVED BY:	DATE:	

MALAGA COUNTY WWTP MODIFICATIONS
UV DISINFECTION
LOOP DIAGRAM TURBIDIMETER

SCALE:	DWG NO:	SH:	REV. NO.
NONE	FM583T-08	8	

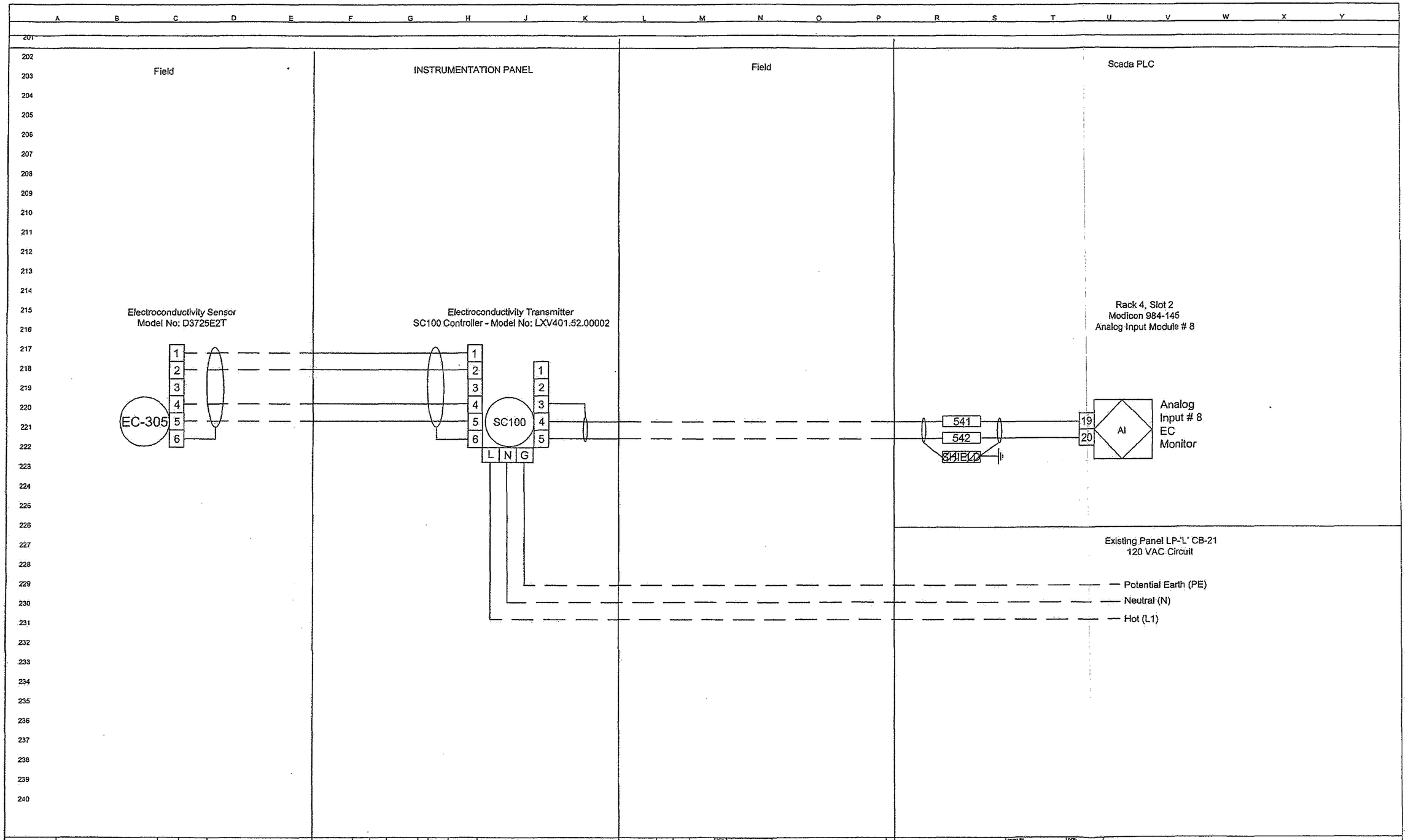

REFERENCE DRAWINGS	REV. NO.	DATE	DESCRIPTION	REV. BY	CKD. BY	APP'D	REV. NO.	DATE	DESCRIPTION	REV. BY	CKD. BY	APP'D

Automated Control AND TECHNICAL SERVICES

Automated Control
AND TECHNICAL SERVICES
4545 N. Brawley, Suite 105
Fresno, California 93722
TEL. (559) 277-3488
FAX (559) 277-3493

NOTICE

This dwg is prepared by A-C Electric Company for its sole use as a design-build electrical contractor in the presentation, budgeting and installation phases of the subject project. This dwg is only a schematic representation of the electrical work and its use by others is prohibited and no liability is assumed for any unauthorized use.

DRAWN BY: DRM	DATE: 11/28/08
DESIGNED BY:	DATE:
CHECKED BY:	DATE:
FIELD ENGINEER:	DATE:
APPROVED BY:	DATE:

MALAGA COUNTY WWTP MODIFICATIONS
UV DISINFECTION
LOOP DIAGRAM EC MONITOR

SCALE:	DWG NO.	SHT:	REV. NO.
NONE	FM583T-09	9	

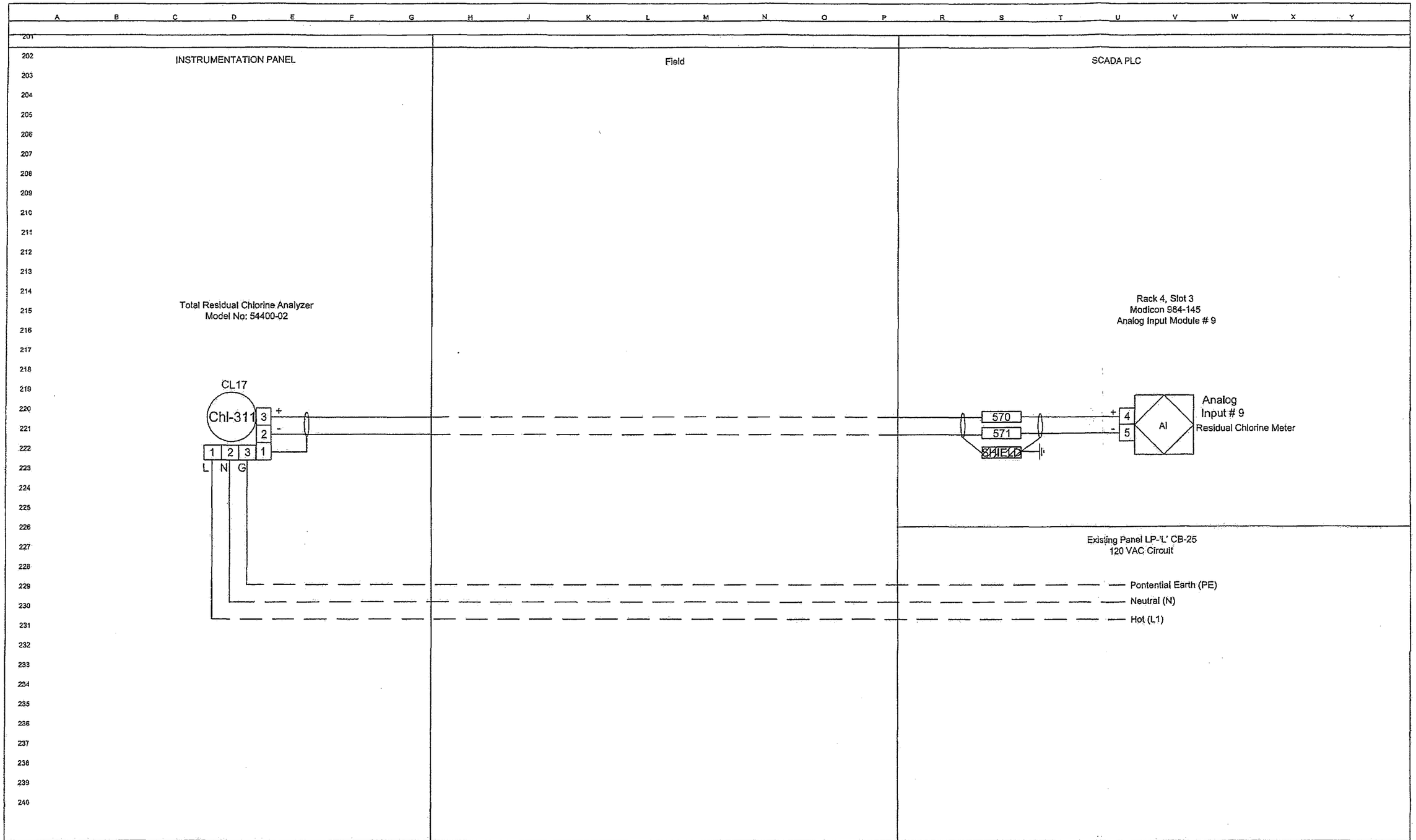

REFERENCE DRAWINGS	REV. NO.	DATE	DESCRIPTION	REV. BY	CKD. BY	APP'D	REV. NO.	DATE	DESCRIPTION	REV. BY	CKD. BY	APP'D

Automated Control AND TECHNICAL SERVICES

Automated Control
AND TECHNICAL SERVICES
4545 N. Brawley, Suite 105
Fresno, California 93722
TEL. (559) 277-3488
FAX (559) 277-3493

NOTICE
This dwg is prepared by A-C Electric Company for its sole use as a design-build electrical contractor in the presentation, budgeting and installation phases of the subject project. This dwg is only a schematic representation of the electrical work and its use by others is prohibited and no liability is assumed for any unauthorized use.

DRAWN BY	DRM	DATE 11/28/05
DESIGNED BY		DATE
CHECKED BY		DATE
PROJ. ENGINEER		DATE
APPROVED BY		DATE

MALAGA COUNTY WWTP MODIFICATIONS
UV DISINFECTION
LOOP DIAGRAM CHLORINE METER

SCALE	DWG NO.	SHT.	REV. NO.
NONE	FM583T-10	10	

Standard Symbols Legend

Miscellaneous Terminals, Schematic Connections

Terminal

Numbered Terminal Block

Numbered Self Grounding Terminal Block

Numbered Disconect Terminal Block

Numbered Fused Disconect Terminal Block

Single Phase Circuit Breaker

Local Wiring

Field Wiring

Programmable Logic Controller I/O

DI — PLC Or Remote I/O Digital Input

DO — PLC Or Remote I/O Digital Output

AI — PLC Or Remote I/O Analog Input

AO — PLC Or Remote I/O Analog Output

Relay, Contactor, Dry Point Contacts

Normal Open Contacts

Normal Closed Contacts

Miscellaneous Devices

Enclosure Illumination Light

Duplex Receptical

XX XX — Device Panel Or Field Mounted

Termination To Be Provided By Vender

REFERENCE DRAWINGS	REV. NO.	DATE	DESCRIPTION	REV. BY	CKD. BY	APP'D	REV. NO.	DATE	DESCRIPTION	REV. BY	CKD. BY	APP'D

Automated Control AND TECHNICAL SERVICES
4545 N. Brawley, Suite 105
Fresno, California 93722
TEL. (559) 277-3488
FAX (559) 277-3493

NOTICE

This dwg is prepared by A-C Electric Company for its sole use as a design-build electrical contractor in the preconstruction, budgeting and installation phases of the subject project. This dwg is only a schematic representation of the electrical work and its use by others is prohibited and no liability is assumed for any unauthorized use.

DRAWN BY: DRM	DATE: 11/28/08	
DESIGNED BY:	DATE:	
CHECKED BY:	DATE:	
PROJ. ENGINEER:	DATE:	
APPROVED BY:	DATE:	

MALAGA COUNTY WWTP MODIFICATIONS
UV DISINFECTION
LEGEND

SCALE:	DWG NO:	SITE:	REV. NO.
NONE	FM583T-11	11	

APPENDIX B

Plans for Self Cleaning Screen Improvements

811 Know what's below. Call before you dig.

WARNING
POWER LINES OVERHEAD

MALAGA COUNTY WATER DISTRICT

FRESNO COUNTY, STATE OF CALIFORNIA

WASTEWATER TREATMENT PLANT

HEADWORKS IMPROVEMENTS AND UV TROUGH PLATFORM

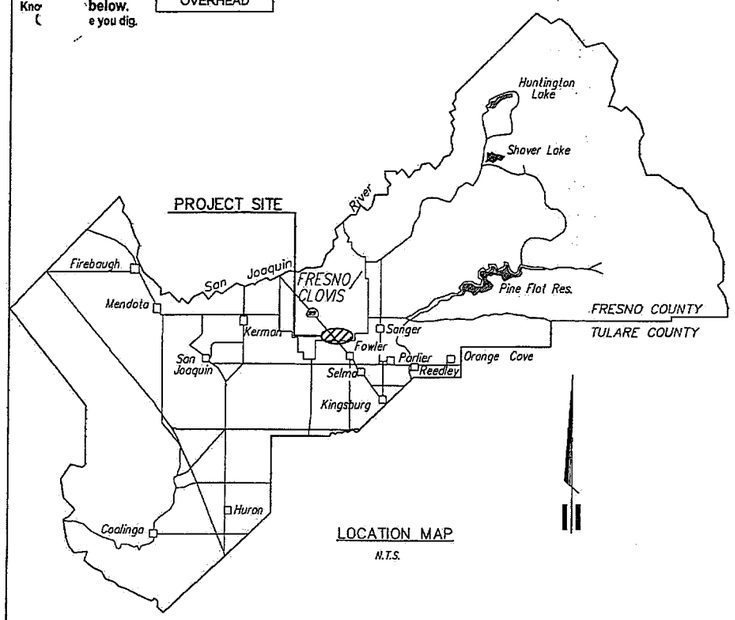

LOCATION MAP
N.T.S.

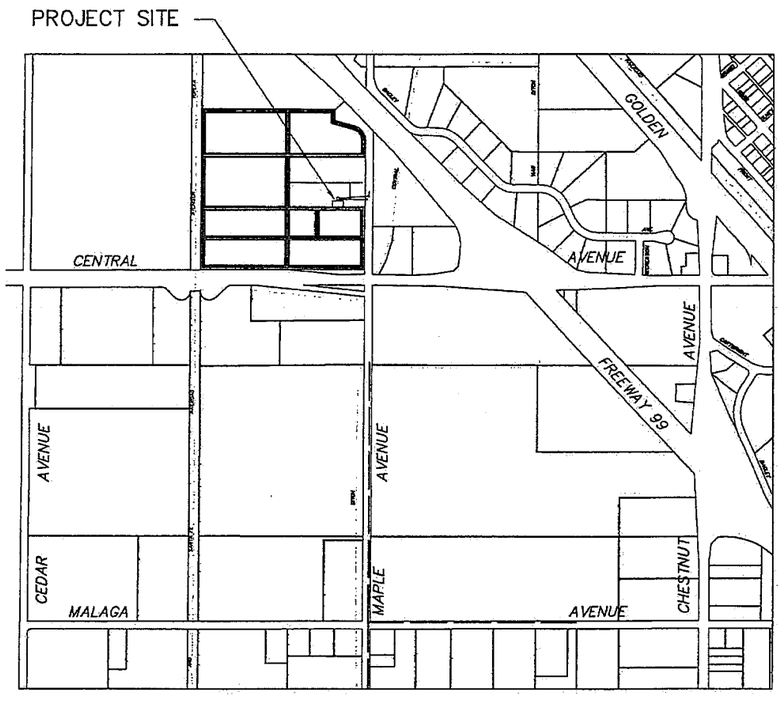

VICINITY MAP
N.T.S.

GENERAL NOTES

1. MCWD (559)485-7353 SHALL BE CONTACTED AT LEAST 48 HOURS PRIOR TO COMMENCEMENT OF WORK ON OR NEAR EXISTING DISTRICT FACILITIES.
2. USED MATERIAL, REJECTS, MISFITS, OR SECONDS, ETC. ARE NOT ACCEPTABLE FOR USE ON MCWD FACILITIES.
3. ALL CONSTRUCTION SHALL BE IN CONFORMANCE WITH THESE PLANS, PROJECT SPECIFICATIONS AND MCWD SPECIFICATIONS.
4. CONTRACTOR SHALL FIELD VERIFY THE HORIZONTAL AND VERTICAL LOCATIONS OF ALL EXISTING FACILITIES PRIOR TO COMMENCING WORK. CONTRACTOR SHALL MAKE ENGINEER AWARE OF ANY DISCREPANCIES.
5. ALL STEEL PIPE AND FITTINGS SHALL BE FURNISHED WITH A SHOP APPLIED HIGH SOLIDS EPOXY COATING ON THE INTERIOR AND EXTERIOR, UNLESS OTHERWISE INDICATED. ALL OTHER EXPOSED STEEL SHALL BE PAINTED WITH A PRE-TREATMENT PRIMER, AN UNDERCOAT AND A FINAL COAT OF PAINT IN ACCORDANCE WITH MCWD SPECIFICATIONS.
6. ALL CONSTRUCTION SHALL BE PERFORMED IN ACCORDANCE WITH APPLICABLE HEALTH AND SAFETY LAWS OF THE STATE OF CALIFORNIA AND CAL/OSHA STANDARDS.
7. CONTRACTOR WILL BE RESPONSIBLE FOR THE REPAIR OF ALL PIPELINE CRACKS, WHICH DEVELOP DURING CONSTRUCTION OF IMPROVEMENTS AFFECTING EXISTING FACILITIES.
8. ALL EXCESS MATERIAL AND/OR DEBRIS SHALL BE REMOVED UPON COMPLETION OF INSTALLATION.
9. CONTRACTOR SHALL BE RESPONSIBLE FOR PROVIDING ADEQUATE DUST CONTROL AT ALL TIMES.

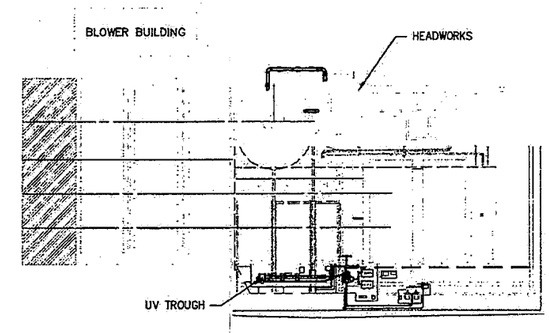

PLANT LOCATION MAP
N.T.S.

SPECIAL NOTE

WHERE UNDERGROUND AND SURFACE STRUCTURES ARE SHOWN ON THE PLANS, THE LOCATIONS, DEPTH AND DIMENSIONS OF STRUCTURES ARE BELIEVED TO BE REASONABLY CORRECT, BUT ARE NOT GUARANTEED. SUCH STRUCTURES ARE SHOWN FOR THE INFORMATION OF THE CONTRACTOR, BUT INFORMATION SO GIVEN IS NOT TO BE CONSTRUED AS A REPRESENTATION THAT SUCH STRUCTURES WILL, IN ALL CASES, BE FOUND WHERE SHOWN, OR THAT THEY REPRESENT ALL OF THE STRUCTURES WHICH MAY BE ENCOUNTERED.

SITE SAFETY AND PROTECTION NOTES

THE DUTY OF THE ENGINEER, OWNER OR ITS AGENTS TO CONDUCT CONSTRUCTION REVIEW OF THE CONTRACTOR'S PERFORMANCE AND THE UNDERTAKING OF INSPECTIONS OR THE GIVING OF INSTRUCTIONS AS AUTHORIZED HEREIN IS NOT INTENDED TO INCLUDE REVIEW OF THE ADEQUACY OF THE CONTRACTOR'S SAFETY MEASURES IN, ON, OR NEAR THE CONSTRUCTION SITE AND SHALL NOT BE CONSTRUED AS SUPERVISION OF THE ACTUAL CONSTRUCTION NOR MAKE THE ENGINEER, OWNER OR ITS AGENTS RESPONSIBLE FOR PROVIDING A SAFE PLACE FOR THE PERFORMANCE OF WORK BY THE CONTRACTOR, SUBCONTRACTORS, OR SUPPLIERS, OR FOR ACCESS, VISITS, USE, WORK, TRAVEL OR OCCUPANCY BY ANY PERSON.

THE CONTRACTOR SHALL HAVE AT THE WORK SITE, COPIES OR SUITABLE EXTRACTS OF CONSTRUCTION SAFETY ORDERS, ISSUED BY CAL-OSHA. CONTRACTOR SHALL COMPLY WITH PROVISIONS OF THESE AND ALL OTHER APPLICABLE LAWS, ORDINANCES AND REGULATIONS. THE CONTRACTOR MUST COMPLY WITH PROVISIONS OF THE SAFETY AND HEALTH REGULATIONS FOR CONSTRUCTION, PROMULGATED BY THE SECRETARY OF LABOR UNDER SECTION 107 OF THE CONTRACT WORK HOURS AND SAFETY STANDARDS ACT, AS SET FORTH IN TITLE 29 C.F.R.

TO PROTECT THE LIVES AND HEALTH OF CONTRACTOR'S EMPLOYEES UNDER THE CONTRACT, THE CONTRACTOR SHALL COMPLY WITH ALL PERTINENT PROVISIONS OF THE "MANUAL OF ACCIDENT PREVENTION IN CONSTRUCTION" ISSUED BY THE ASSOCIATED GENERAL CONTRACTORS OF AMERICA, INC., AND SHALL MAINTAIN AN ACCURATE RECORD OF ALL CASES OF DEATH, OCCUPATIONAL DISEASE, AND INJURY REQUIRING MEDICAL ATTENTION OR CAUSING LOSS OF TIME FROM WORK, ARISING OUT OF AND IN THE COURSE OF EMPLOYMENT OR WORK UNDER THE CONTRACT.

THE CONTRACTOR ALONE SHALL BE RESPONSIBLE FOR THE SAFETY, EFFICIENCY, AND ADEQUACY OF CONTRACTOR'S FACILITIES, APPLIANCES, AND METHODS AND FOR ANY DAMAGE, WHICH MAY RESULT FROM THEIR FAILURE OR THEIR IMPROPER CONSTRUCTION, MAINTENANCE OR OPERATION.

THE CONTRACTOR AGREES THAT IT SHALL ASSUME SOLE AND COMPLETE RESPONSIBILITY FOR JOB SITE CONDITIONS DURING THE COURSE OF CONSTRUCTION OF THIS PROJECT, INCLUDING SAFETY OF ALL PERSONS AND PROPERTY; THAT THIS REQUIREMENT SHALL APPLY CONTINUOUSLY AND NOT BE LIMITED TO [illegible] WORKING HOURS; AND THAT THE CONTRACTOR SHALL DEFEND, INDEMNIFY AND HOLD THE O[illegible]VOST & PRITCHARD CONSULTING GROUP, AND THEIR RESPECTIVE AGENTS HARMLESS FROM A[illegible]LL LIABILITY, REAL OR ALLEGED, IN CONNECTION WITH THE PERFORMANCE OF WORK ON THIS [illegible]ECT, EXCEPTING FOR LIABILITY ARISING FROM THE SOLE NEGLIGENCE OF OWNER, ENGINEER, OR THEIR RESPECTIVE AGENTS.

THE OWNER AND ITS AGENTS' SITE RESPONSIBILITIES ARE LIMITED SOLELY TO THE ACTIVITIES OF THEIR EMPLOYEES ON SITE. THESE RESPONSIBILITIES SHALL NOT BE INFERRED BY ANY PARTY TO MEAN THAT THE OWNER OR ITS AGENTS HAVE RESPONSIBILITY FOR SITE SAFETY. SAFETY IN, ON, OR ABOUT THE SITE IS THE SOLE AND EXCLUSIVE RESPONSIBILITY OF THE CONTRACTOR ALONE. THE CONTRACTOR'S METHODS OF WORK PERFORMANCE, SUPERINTENDENCE AND THE CONTRACTOR'S EMPLOYEES, AND SEQUENCING OF CONSTRUCTION ARE ALSO THE SOLE AND EXCLUSIVE RESPONSIBILITIES OF THE CONTRACTOR ALONE.

BOARD OF DIRECTORS

PRESIDENT CHARLES E. GARABEDIAN

VICE PRESIDENT SALVADOR CERRILLO
IRMA CASTANEDA
FRANK CERRILLO JR.
FRANK SOTO

GENERAL-MANAGER RUSS HOLCOMB

SHEET LIST TABLE

SHEET	TITLE
CV1	COVER SHEET
PID	PROCESS AND INSTRUMENTATION
DT1	DEMOLITION PLAN
DT2	PLAN AND SECTION
DT3	UV TROUGH PLATFORM PLAN
DT4	UV TROUGH PLATFORM DETAILS
E1	ELECTRICAL
P1	PHOTOGRAPHS
P2	PHOTOGRAPHS

COPYRIGHT 2011 by PROVOST & PRITCHARD CONSULTING GROUP, INC. ALL RIGHTS RESERVED
The firm of Provost & Pritchard Engineering Group, Inc. retains all rights in these plans, specifications and other applicable property rights in these plans. There plans and specifications are not to be reproduced, changed or copied in any form or manner whatsoever, nor are they to be assigned to a third party without first obtaining the express written permission and consent of Provost & Pritchard Engineering Group, Inc. In the event of unauthorized reuse of these plans by a third party, the third party shall hold the firm of Provost & Pritchard Engineering Group, Inc. harmless, and shall indemnify the firm of Provost & Pritchard Engineering Group, Inc.'s legal fees associated with defending and enforcing these rights.

No.	REVISION	BY	DATE

PRELIMINARY
NOT FOR CONSTRUCTION
3/16/11

WASTEWATER TREATMENT PLANT
MALAGA COUNTY WATER DISTRICT
FRESNO COUNTY, STATE OF CALIFORNIA

HEADWORKS IMPROVEMENTS
AND UV TROUGH PLATFORM
COVER SHEET

EST. 1968
PROVOST & PRITCHARD
CONSULTING GROUP
An Employee Owned Company
286 W. WEST CORNELL AVENUE
FRESNO, CALIFORNIA 93711-6162
559/449-2700 FAX 559/449-2715
www.ppeng.com

DESIGN ENGINEER: MGT
LICENSE NO: CE 39,961
DRAFTED BY: DWM
CHECKED BY: ------
SCALE: AS SHOWN
DATE: 01/01/05
JOB NO: 105710C2
DWG. NO:
SHEET CV1 OF XX

3/16/2011 5:24 PM \\Pinefla\dwg_fgs\Clients\Madage CWD - 1057\105710C2-WWTP Self Cleaning Screen\DWG\SHEET\105710C1-CH-Cover Sheet.dwg -Chris Atkins

811 Know what's below. Call before you dig.

WARNING
POWER LINES OVERHEAD

FIT	FLOW INDICATOR TRANSMIT
HR	HAND SWITCH
LAH	HIGH LEVEL ALARM
LOR	LOCAL OR REMOTE
LCP	LOCAL CONTROL PANEL
LS	LEVEL SWITCH
PB	POWER BOX

DIRECTION OF ARROW DENOTES INPUT (I) OR OUTPUT (O)

COLOR OF ARROW DENOTES ANALOG (A) OR DISCRETE (D)

DO DI AD AI

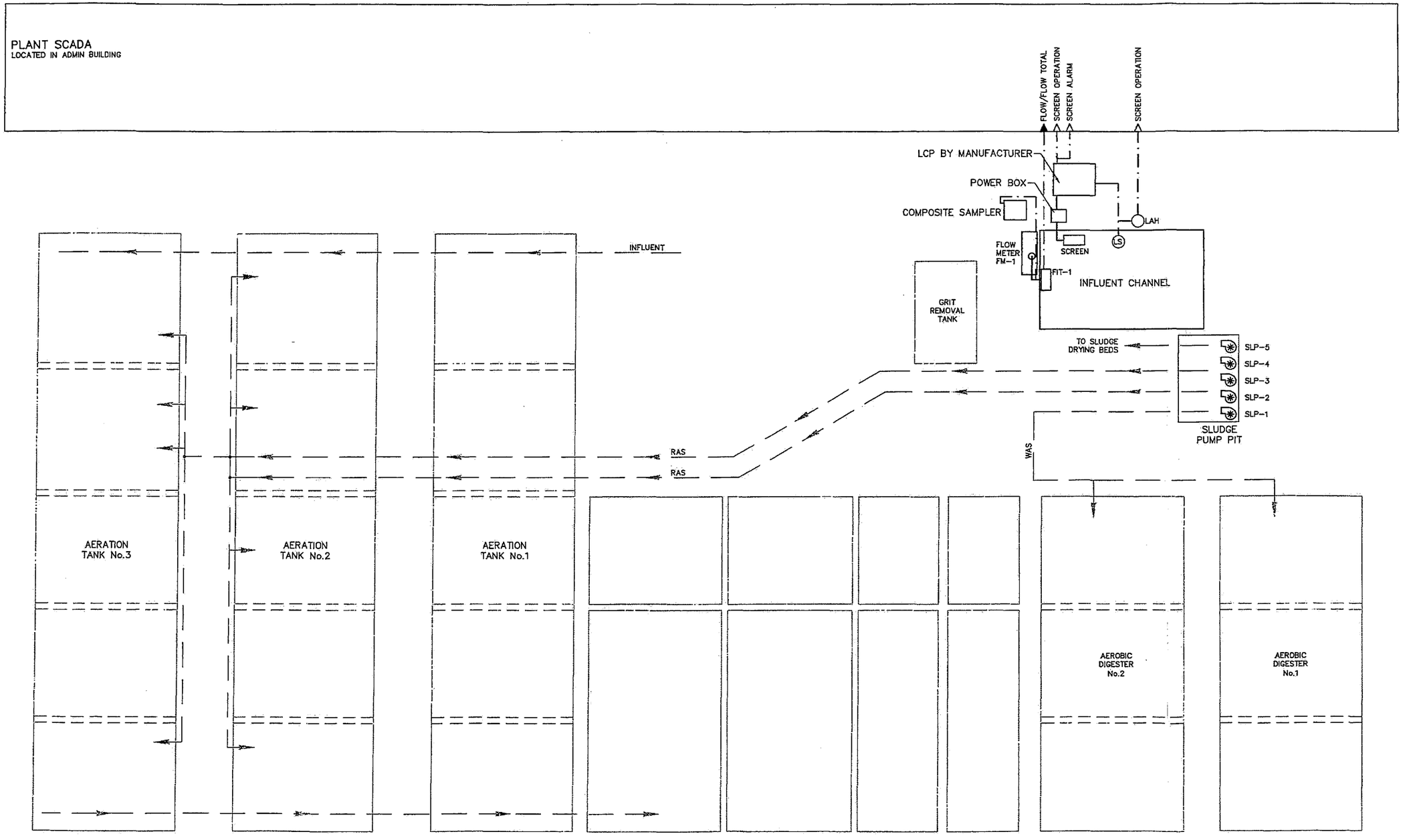

COPYRIGHT 2011 by PROVOST & PRITCHARD
ALL RIGHTS RESERVED
The firm of Provost & Pritchard Engineering Group, Inc. retains all ownership and copyright interests in these plans, specifications, and other deliverables prepared by this firm. These plans are not to be reproduced, changed, or copied in any form or manner whatsoever, nor are they to be assigned to a third party without first obtaining the written permission and consent of Provost & Pritchard Engineering Group, Inc. In the event of unauthorized reuse of these plans by a third party, the third party agrees to hold Provost & Pritchard Engineering Group, Inc. harmless, and shall defend, at its own expense, and indemnify Provost & Pritchard Engineering Group, Inc. against any and all claims arising out of the third party's unauthorized reuse of the plans, and shall bear the cost of Provost & Pritchard Engineering and enforcing these rights.

PRELIMINARY
NOT FOR CONSTRUCTION
3/16/11

No.	REVISION	BY	DATE

WASTEWATER TREATMENT PLANT
MALAGA COUNTY WATER DISTRICT
FRESNO COUNTY, STATE OF CALIFORNIA

HEADWORKS IMPROVEMENTS
AND UV TROUGH PLATFORM
PROCESS AND INSTRUMENTATION

EST. 1966
PROVOST & PRITCHARD
CONSULTING GROUP
An Employee Owned Company
286 WEST CROMWELL AVENUE
FRESNO, CALIFORNIA 93711-6162
559/449-2700 FAX 559/449-2715
www.ppeng.com

DESIGN ENGINEER: MGT	
LICENSE NO: CE 39,961	
DRAFTED BY: DWM	CHECKED BY: ----
SCALE: AS SHOWN	
DATE: 01/01/05	
JOB NO: 105710C2	
DWG. NO:	
SHEET PID OF XX	

3/16/2011 5:24 PM \\Pnfsfs1\dwg_dgn\Clients\Valeso CWD - 1057\105710C2-WWTP Self Cleaning Screen\DWG\SHEET\105710C2-PID-PROCESS AND INSTRUMENTATION.dwg -Chris Aakes

811 Know what's below. Call before you dig.

WARNING
POWER LINES OVERHEAD

N

SCALE IN FEET
0 1.5 3 6

DEMOLITION NOTES

1. REMOVE EXISTING BARMINUTOR AND APPURTENANCES.
2. PRIOR TO BIDDING OF EQUIPMENT, CONTRACTOR SHALL TAKE ALL NECESSARY FIELD MEASUREMENTS OF THE BARMINUTOR AND EQUIPMENT WHICH SHALL BE USED.

LEGEND

- EXIST. CONCETE TO BE REMOVED
- EXIST. AC TO BE REMOVED
- EXIST. OTHER TO BE REMOVED
- EXIST. TO BE REMOVED
- EXIST. TO REMAIN

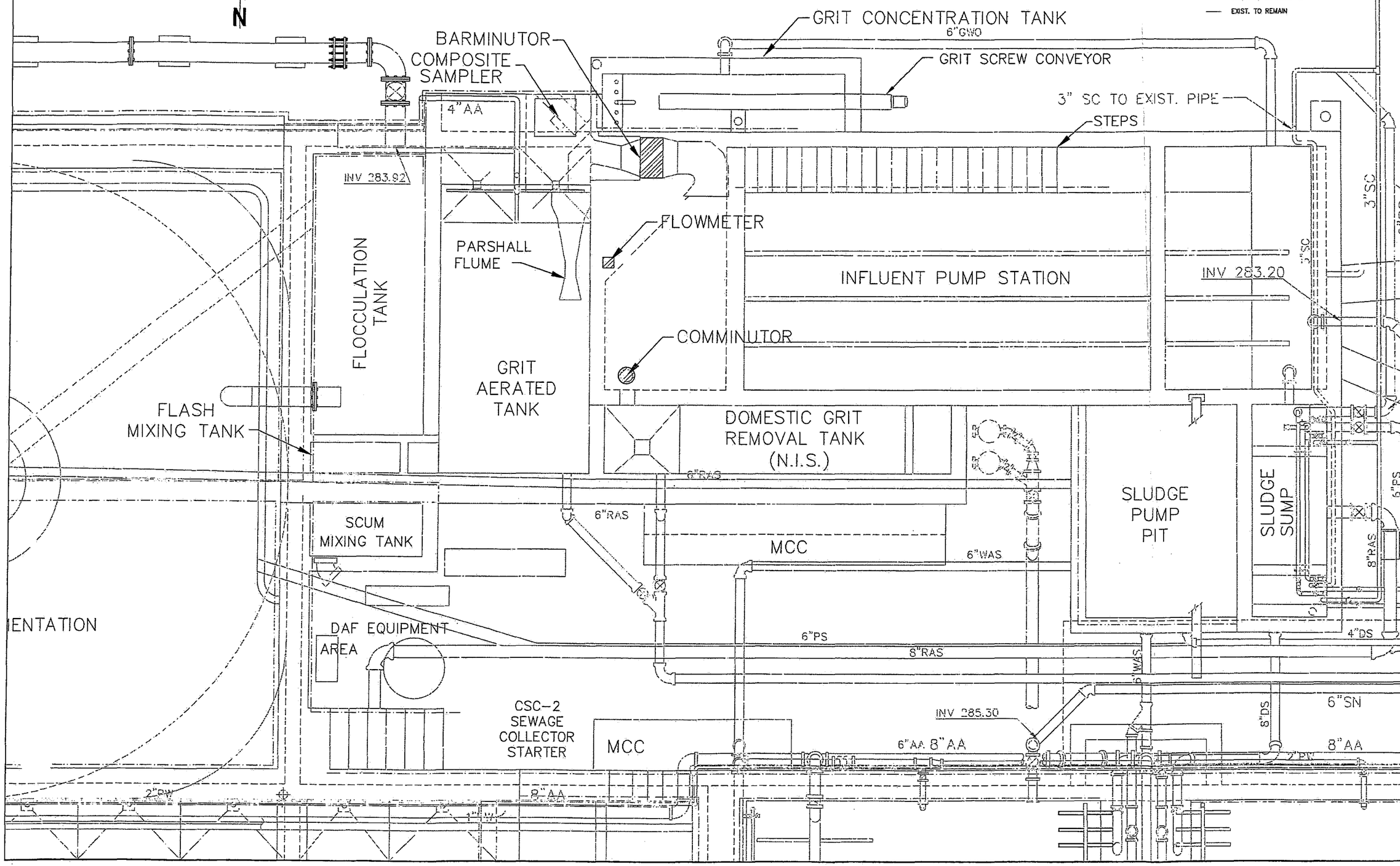

COPYRIGHT 2011 by PROVOST & PRITCHARD
All rights reserved. No part of this plan set may be copied, reproduced, or used in any form or manner without the express written permission of Provost & Pritchard Engineering Group, Inc., expressly reserves its common law copyright and other property rights in these plans. These plans are not to be reproduced, changed, or copied in any form or manner whatsoever, nor are they to be assigned to any third party without first obtaining the written permission and consent of Provost & Pritchard Engineering Group, Inc. In the event of unauthorized reuse of these plans by a third party, the third party shall hold the firm of Provost & Pritchard harmless for any damages or liability arising out of the unauthorized use of these plans, and shall bear the cost of Provost & Pritchard Engineering Group, Inc.'s attorney fees associated with defending and enforcing its these rights.

No.	REVISION	BY	DATE

PRELIMINARY
NOT FOR CONSTRUCTION
3/16/11

WASTEWATER TREATMENT PLANT

MALAGA COUNTY WATER DISTRICT
FRESNO COUNTY, STATE OF CALIFORNIA

HEADWORKS IMPROVEMENTS
AND UV TROUGH PLATFORM
DEMOLITION PLAN

EST. 1968
PROVOST & PRITCHARD
CONSULTING GROUP
An Employee Owned Company
286 WEST CROMWELL AVENUE
FRESNO, CALIFORNIA 93711-6162
559/449-2700 FAX 559/449-2715
provpritch.com

DESIGN ENGINEER: MCT	
LICENSE NO: CE 39,951	
DRAFTED BY: DWM	CHECKED BY: ----
SCALE: AS SHOWN	
DATE: 01/01/05	
JOB NO: 105710C2	
DWG. NO:	
SHEET DT1 OF XX	

3/16/2011 5:24 PM \\Pwfsfs\dwg_dgn\Clients\Valoge CWD - 105710C2-WWP Self Cleaning Screen\DWG\SHEET\105710C2-D1-DEMOLITION.dwg -Chris Adkins

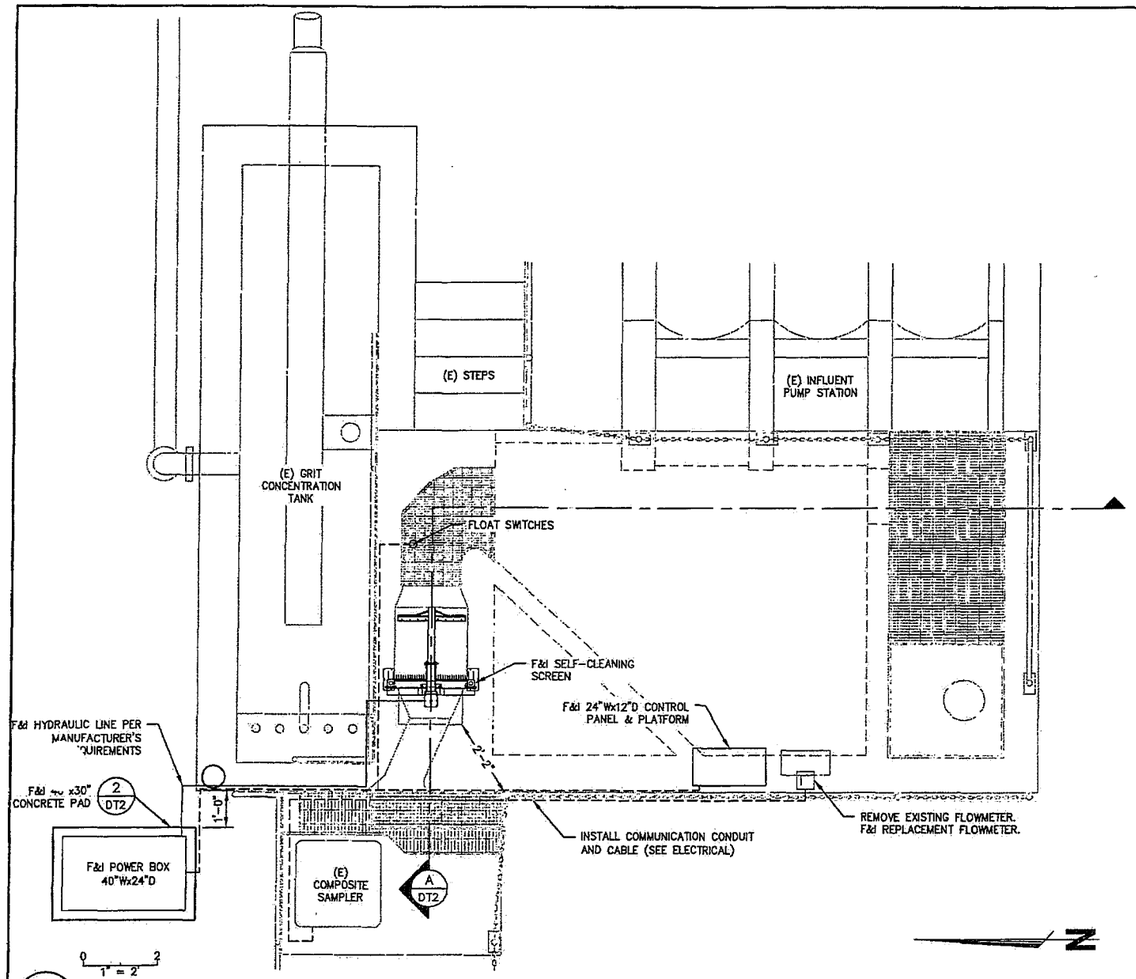

1 DT2

SELF-CLEANING SCREEN PLAN VIEW

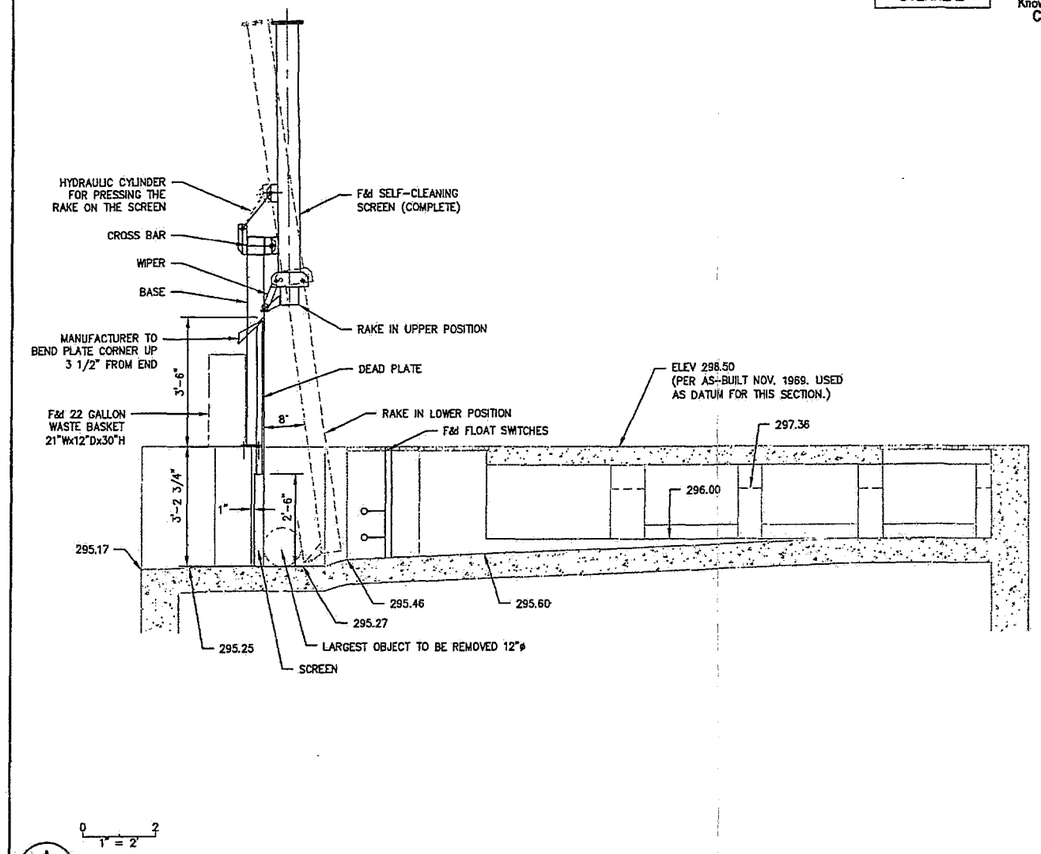

A DT2

SELF-CLEANING SCREEN SECTION VIEW

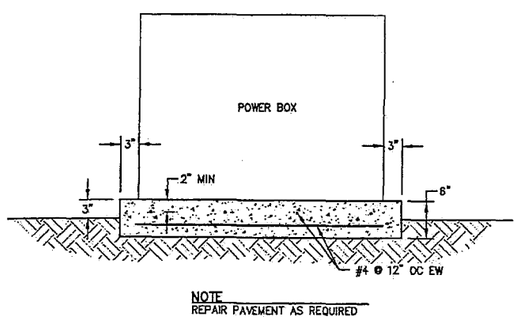

NOTE
REPAIR PAVEMENT AS REQUIRED

NOT TO SCALE

2 DT2

CONCRETE PAD

SCALE = NTS

WARNING
POWER LINES OVERHEAD

811 Know what's below. Call before you dig.

COPYRIGHT 2011 by PROVOST & PRITCHARD ENGINEERING GROUP, INC. ALL RIGHTS RESERVED
The firm of Provost & Pritchard Engineering Group, Inc. expressly reserves its common law copyright and other property rights in these plans, specifications, and plans. These documents are not to be reproduced, changed, or copied in any form or manner whatsoever, nor are they to be assigned to any third party without first obtaining the written permission and consent of Provost & Pritchard Engineering Group, Inc. In the event of unauthorized reuse of these plans by a third party, the third party shall hold the firm of Provost & Pritchard Engineering Group, Inc. harmless, and shall defend and indemnify Provost & Pritchard Engineering Group, Inc. from any and all liability, including but not limited to litigation costs and attorney's fees, resulting from such reuse.

No.	REVISION	BY	DATE

PRELIMINARY
NOT FOR CONSTRUCTION
3/16/11

WASTEWATER TREATMENT PLANT
MALAGA COUNTY WATER DISTRICT
FRESNO COUNTY, STATE OF CALIFORNIA

HEADWORKS IMPROVEMENTS
AND UV TROUGH PLATFORM
PLAN AND SECTION

EST. 1968
PROVOST & PRITCHARD
CONSULTING GROUP
An Employee Owned Company
286 WEST CROWELL AVENUE
FRESNO, CALIFORNIA 93711-6162
559/449-2700 FAX 559/449-2715
www.ppeng.com

DESIGN ENGINEER: MGT
LICENSE NO: CE 39,961
DRAFTED BY: DWM
CHECKED BY: ----
SCALE:
DATE: 01/01/05
JOB NO: 105710C2
DWG. NO:
SHEET DT2 OF XX

3/16/2011 3:24 PM \\Pleasfs1\dwg_dgn\Clients\Malaga CWD - 1057\105710C2-WWTP Self Cleaning Screen\DWG\SHEET\1057-DT-PLAN AND SECTION.dwg -Chris Askins

811 Know what's below. Call before you dig.

WARNING
POWER LINES OVERHEAD

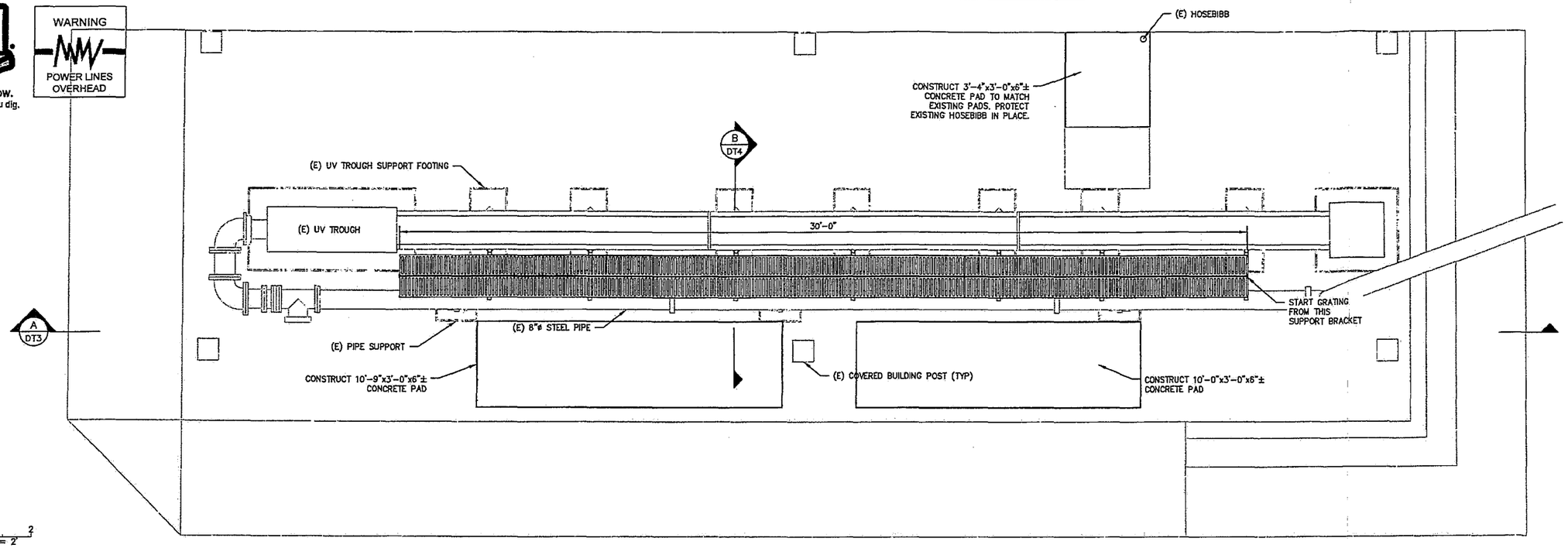

0 2
1" = 2'

1
1

UV TROUGH PLATFORM ADDITION – PLAN VIEW

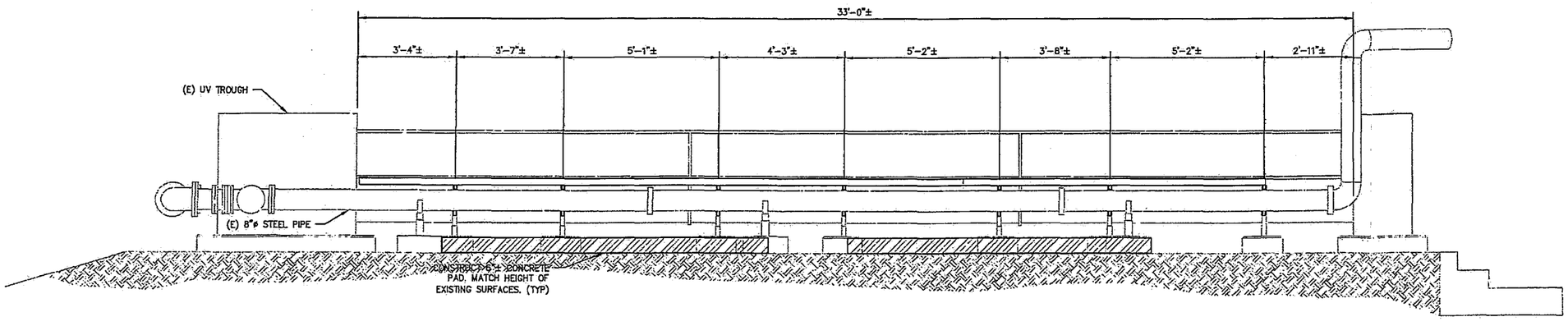

0 2
1" = 2'

A
DT3

UV TROUGH PLATFORM ADDITION – SECTION A

COPYRIGHT 2011 by PROVOST & PRITCHARD
RESERVED UNDER THE COPYRIGHT LAWS OF THE U.S.A.
The firm of Provost & Pritchard Engineering Group, Inc. expressly reserves its common law copyright and other property rights in these plans. These plans are not to be reproduced, changed, or copied in any form or manner whatsoever, nor are they to be assigned to a third party without first obtaining the written permission and consent of Provost & Pritchard Engineering Group, Inc. In the event of unauthorized reuse of these plans by a third party, the third party agrees to hold Provost & Pritchard Engineering Group, Inc. harmless, and shall bear the cost of Provost & Pritchard Engineering Group, Inc. 's legal expenses associated with enforcing these rights.

PRELIMINARY
NOT FOR CONSTRUCTION
3/16/11

No.	REVISION	BY	DATE

WASTEWATER TREATMENT PLANT

MALAGA COUNTY WATER DISTRICT
FRESNO COUNTY, STATE OF CALIFORNIA

HEADWORKS IMPROVEMENTS
AND UV TROUGH PLATFORM
UV TROUGH PLATFORM PLAN

EST. 1968
PROVOST & PRITCHARD
CONSULTING GROUP
An Employee Owned Company
286 WEST CROMWELL AVENUE
FRESNO, CALIFORNIA 93711-6162
559/449-2700 FAX 559/449-2715
www.provpritch.com

DESIGN ENGINEER: MGT
LICENSE NO: CE 39,961
DRAFTED BY: DWM
CHECKED BY: ----
SCALE:
DATE: 01/01/05
JOB NO: 105710C2
DWG. NO:
SHEET
DT3 OF XX

3/16/2011 5:25 PM \\Pnasfs\dfsg_dgn\Clients\Malaga CWD - 1057\105710C2-WWTP Self Cleaning Screen\DWG\SHEET\105710C2-DT-UV TROUGH PLATFORM PLAN.dwg -Chris Aakins

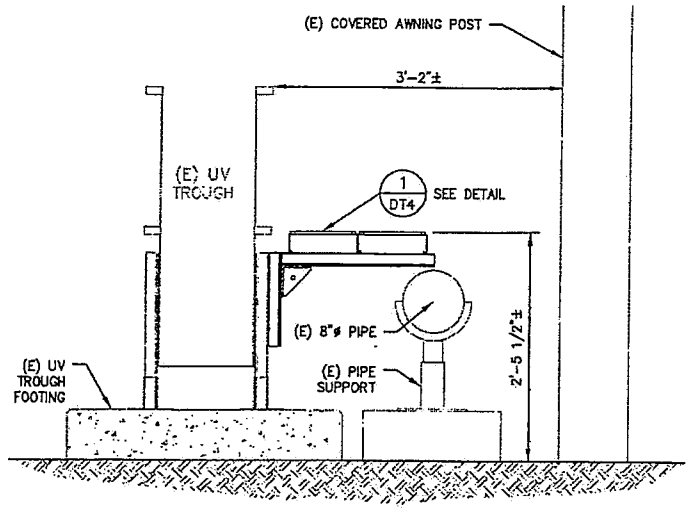

B
DT4

UV TROUGH PLATFORM ADDITION – SECTION B

NOTE
ALL PARTS TO BE FASTENED TOGETHER USING UNISTRUT NUTS, WASHERS, AND BOLTS. SEE MANUFACTURER FOR ASSEMBLY INSTRUCTIONS.

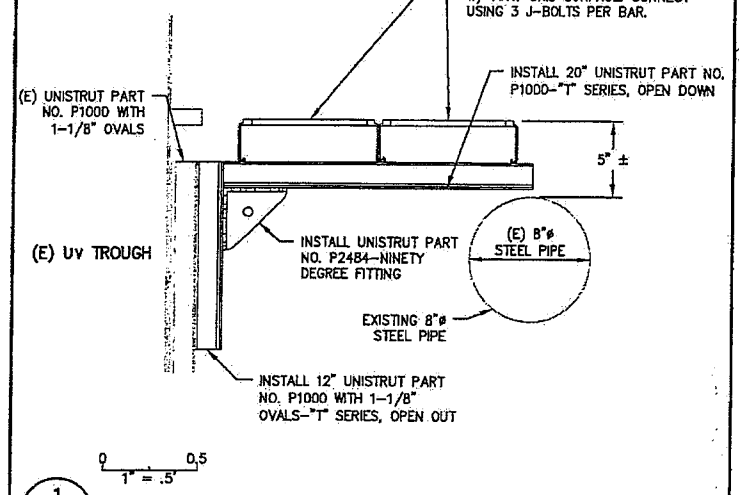

1
DT4

DETAIL 1

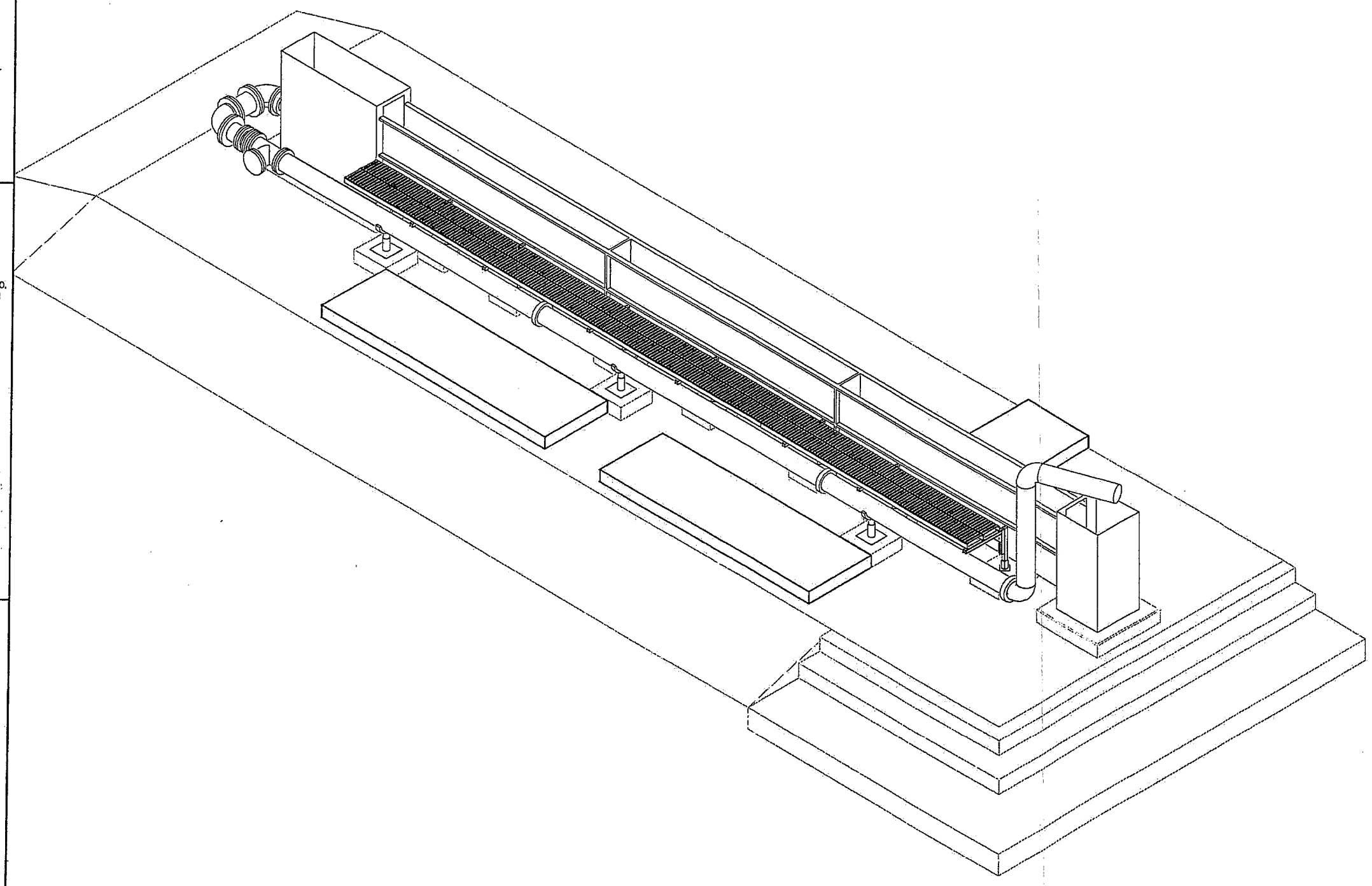

2
DT4

UV TROUGH PLATFORM ISOMETRIC VIEW
SCALE: AS SHOWN

SCALE IN FEET
0 1 2 4

WARNING
POWER LINES OVERHEAD

811
Know what's below.
Call before you dig.

COPYRIGHT 2011 by PROVOST & PRITCHARD CONSULTING GROUP ALL RIGHTS RESERVED
The firm of Provost & Pritchard Engineering Group, Inc. expressly reserves its common law copyright and other property rights in these plans. These plans are not to be reproduced, changed, or copied in any form or manner whatsoever, nor are they to be assigned to any third party without first obtaining the written permission and consent of Provost & Pritchard Engineering Group, Inc. In the event of unauthorized reuse of these plans by a third party, the third party shall hold the firm of Provost & Pritchard Engineering Group, Inc. harmless, and shall bear the cost of Provost & Pritchard Engineering Group, Inc.'s legal expenses associated with defending and enforcing these rights.

No.	REVISION	BY	DATE

PRELIMINARY
NOT FOR CONSTRUCTION
3/16/11

WASTEWATER TREATMENT PLANT

MALAGA COUNTY WATER DISTRICT
FRESNO COUNTY, STATE OF CALIFORNIA

HEADWORKS IMPROVEMENTS
AND UV TROUGH PLATFORM
UV TROUGH PLATFORM DETAILS

EST. 1968
PROVOST & PRITCHARD
CONSULTING GROUP
An Employee Owned Company
286 WEST CROMWELL AVENUE
FRESNO, CALIFORNIA 93711-6162
559/449-2700 FAX 559/449-2715
www.pprg.com

DESIGN ENGINEER: MGT	
LICENSE NO: CE 39,961	
DRAFTED BY: DWM	CHECKED BY: ----
SCALE:	
DATE: 01/01/05	
JOB NO: 105710C2	
DWG. NO:	
SHEET DT4 OF XX	

3/16/2011 5:25 PM \\Pnefile\dwg_fgn\Clients\Malaga CWD - 1057\105710C2-WWTP Sdf Cleaning Screen\DWG\SHEET\105710C2-DT-UV TROUGH PLATFORM DETAILS.dwg -Chris Ashlore

811 Know what's below. Call before you dig.

WARNING
POWER LINES OVERHEAD

SHEET	E1 OF XX
DWG. NO:	
JOB NO:	105710C2
DATE:	01/01/05
SCALE:	AS SHOWN
DRAFTED BY:	DWM
CHECKED BY:	----
LICENSE NO:	CE 39,961
DESIGN ENGINEER:	MGT

EST 1968
PROVOST& PRITCHARD
CONSULTING GROUP
An Employee Owned Company
286 WEST CROWELL AVENUE
FRESNO, CALIFORNIA 93711-6162
559/449-2700 FAX 559/449-2715
www.ppeng.com

WASTEWATER TREATMENT PLANT

MALAGA COUNTY WATER DISTRICT
FRESNO COUNTY, STATE OF CALIFORNIA

HEADWORKS IMPROVEMENTS
AND UV TROUGH PLATFORM
ELECTRICAL

PRELIMINARY
NOT FOR CONSTRUCTION
3/16/11

No.	REVISION	BY	DATE

COPYRIGHT 2011 by PROVOST & PRITCHARD ENGINEERING GROUP, INC. ALL RIGHTS RESERVED
The firm of Provost & Pritchard Engineering Group, Inc. expressly reserves its common law copyright and other applicable property rights in these plans. These plans are not to be reproduced, changed, or copied in any form or manner whatsoever, nor are they to be assigned to a third party without first obtaining the written permission and consent of Provost & Pritchard Engineering Group, Inc. In the event of unauthorized reuse of these plans by a third party, the third party shall hold the firm of Provost & Pritchard Engineering Group, Inc. harmless, and shall bear the cost of Provost & Pritchard Engineering Group, Inc.'s legal fees associated with defending and enforcing these rights.

3/16/2011 5:25 PM \\Pinefloi\dwg_dgn\Clients\Malaga CWD - 1057\105710C2-WWTP Self Cleaning Screen\DWG\SHEET\105710C2-EL-ELECTRICAL.dwg -Chris Askins

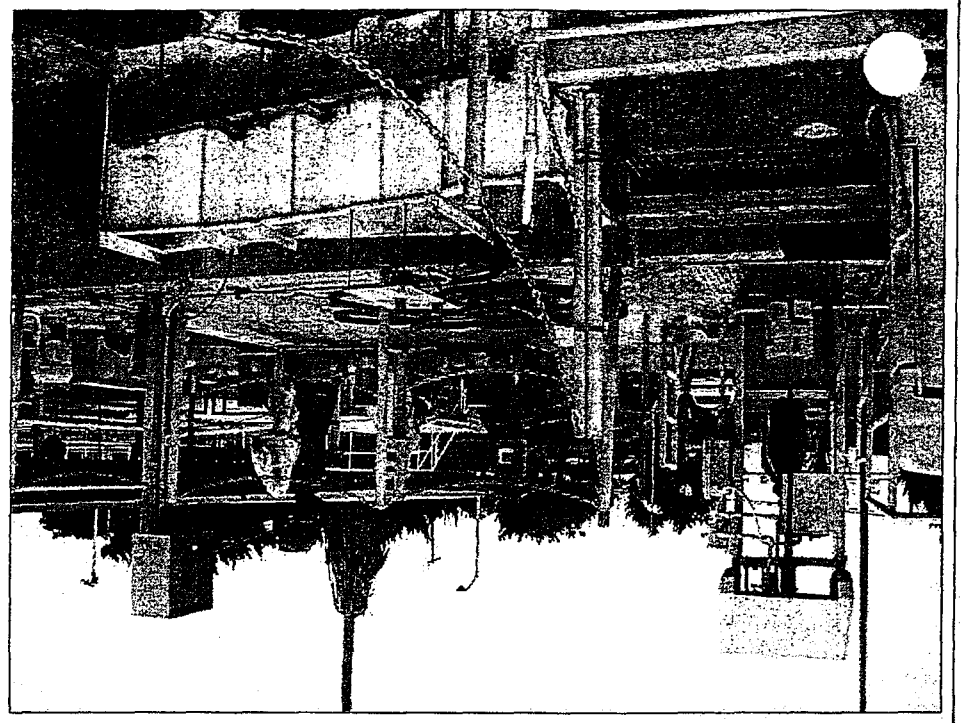

BARMINUTOR (LOOKING EAST)

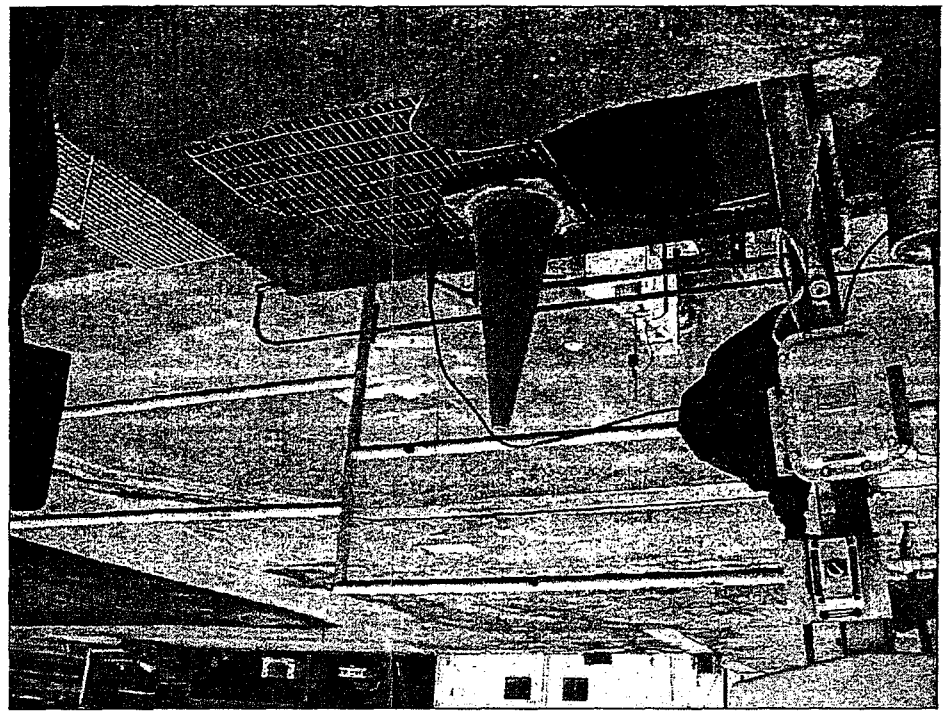

BARMINUTOR (LOOKING NORTH)

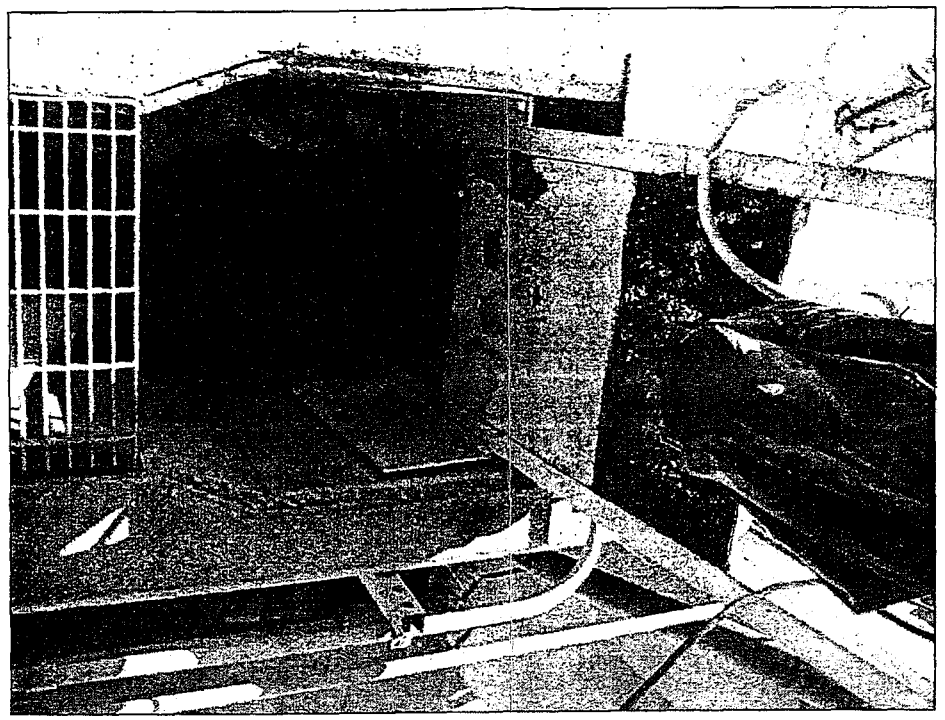

BARMINUTOR (CHANNEL @ GATE)

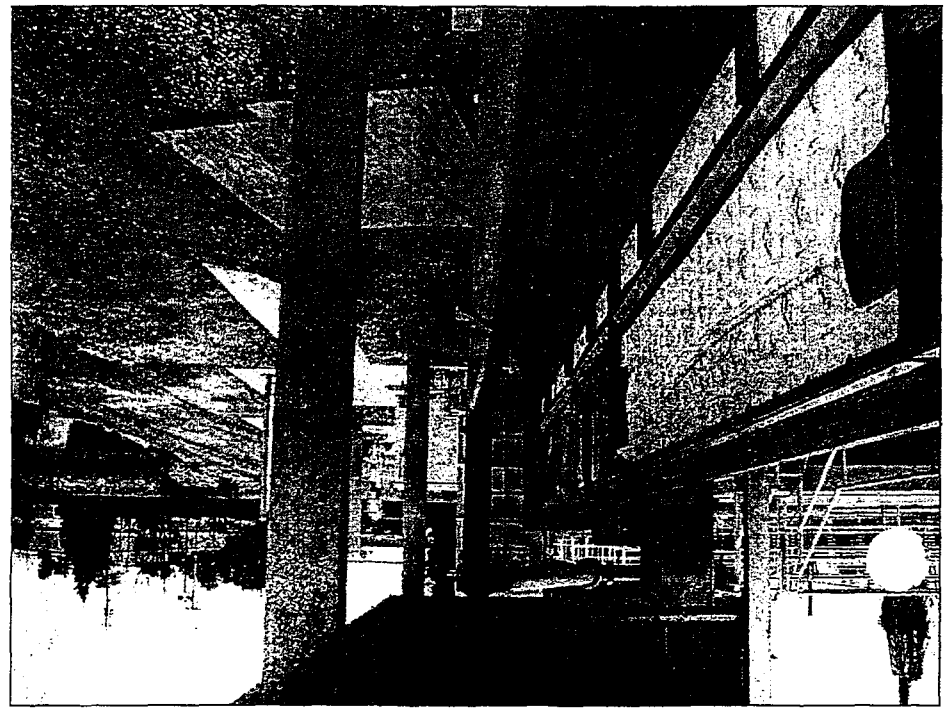

UV TROUGH (LOOKING EAST)

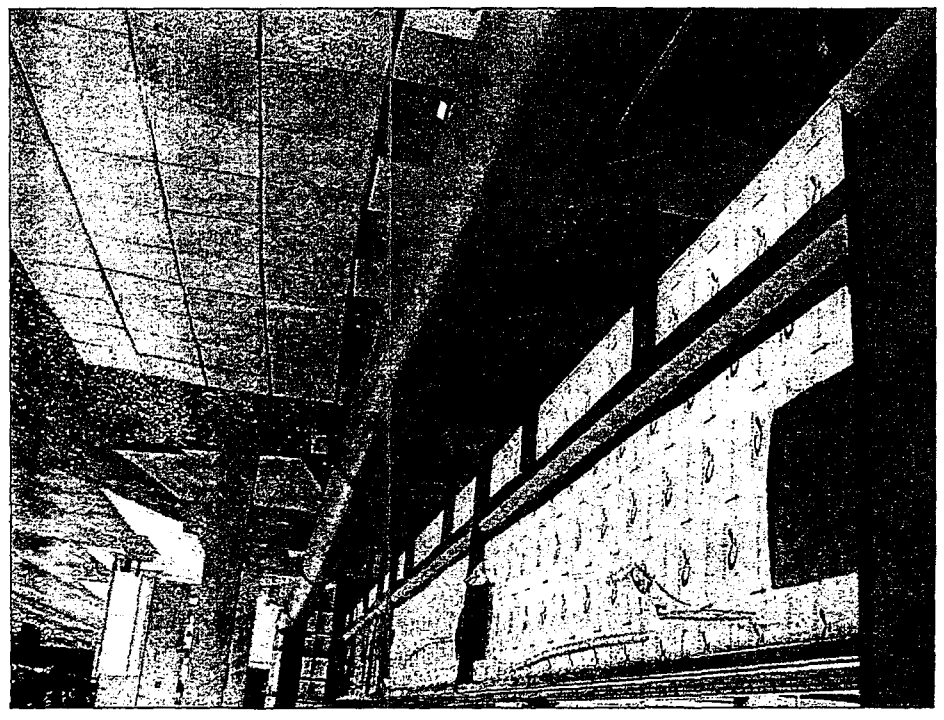

UV TROUGH (LOOKING EAST)

UV TROUGH (EXISTING UNISTRUT P1000 SUPPORT)

PRELIMINARY
NOT FOR CONSTRUCTION
3/16/11

No.	REVISION	BY	DATE

COPYRIGHT 2011 by PROVOST & PRITCHARD CONSULTING GROUP - ALL RIGHTS RESERVED.
Provost & Pritchard Consulting Group, Inc. has only received its common law copyright and other applicable property rights in these plans. These plans are not to be copied in whole or in part, nor are they to be assigned to a third party without the express written consent of Provost & Pritchard Consulting Group, Inc. In the event of unauthorized reuse of these plans by third parties, the third party shall hold the firm of Provost & Pritchard Consulting Group, Inc. harmless, and shall indemnify Provost & Pritchard Consulting Group, Inc. for any legal fees associated with defending and enforcing these rights.

WASTEWATER TREATMENT PLANT

MALAGA COUNTY WATER DISTRICT
FRESNO COUNTY, STATE OF CALIFORNIA

HEADWORKS IMPROVEMENTS
AND UV TROUGH PLATFORM

PHOTOGRAPHS

EST. 1968
PROVOST & PRITCHARD
CONSULTING GROUP
An Employee Owned Company
286 WEST CROMWELL AVENUE
FRESNO, CALIFORNIA 93711-6162
559/436-7400 FAX 559/449-2715
www.pandp.com

DESIGN ENGINEER: MGT
LICENSE No: CE 39,961
DRAFTED BY: DWM
CHECKED BY: ---
SCALE: AS SHOWN
DATE: 01/01/05
JOB No: 10571002
DWG. No:
SHEET P1 OF XX

3/16/2011 5:26 PM \\Pandp\dfs_dfs\Clients\Malaga CWD - 10571\10571002-WWTP Salt Cleaning Screw\DWG\SHEET\10571002-PH-PHOTOGRAPHS.dwg - Carla Adkins

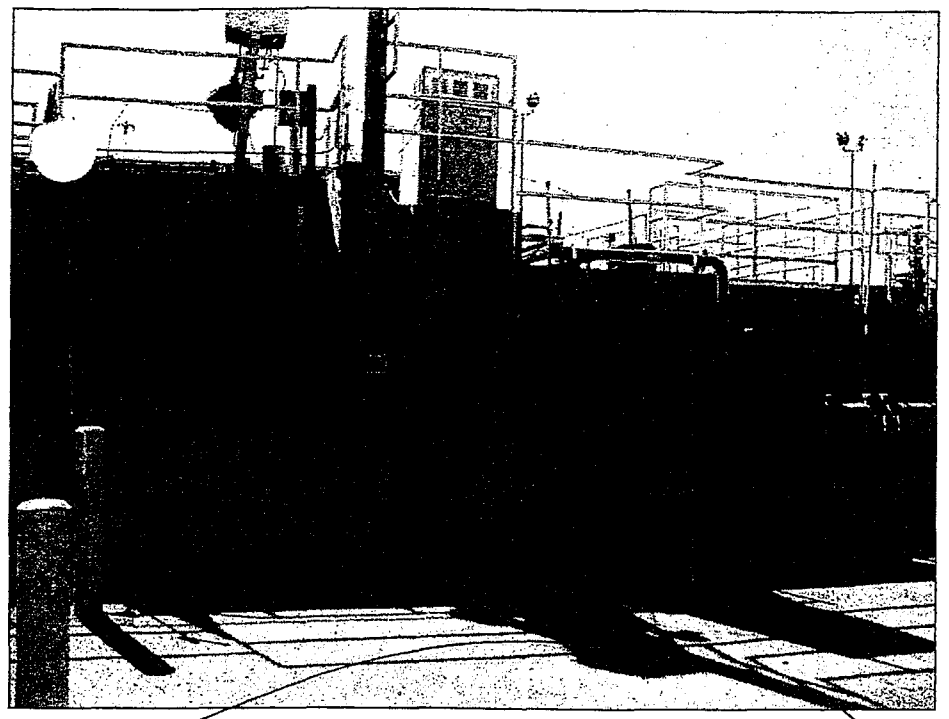

POWER BOX LOCATION (LOOKING SOUTH)

[redacted]

Margins

fort

PRELIMINARY
NOT FOR CONSTRUCTION
JF 11/11

No.	REVISION	BY	DATE

WASTEWATER TREATMENT PLANT

MALAGA COUNTY WATER DISTRICT
FRESNO COUNTY, STATE OF CALIFORNIA

HEADWORKS IMPROVEMENTS
AND UV TROUGH PLATFORM

EST. 1966
PROVOST & PRITCHARD
CONSULTING GROUP
An Employee Owned Company
286 WEST CROMWELL AVENUE
FRESNO, CALIFORNIA 93711-6162
559/449-2700 FAX 559/449-2715
www.provpritch.com

DESIGN ENGINEER: MST

LICENSE NO: CE 35,961

DRAFTED BY: DWP | CHECKED BY: ——

SCALE: AS SHOWN

DATE: 01/07/06

JOB NO: 1067102

DWG. NO:

SHEET P2 of XX

APPENDIX C

Record Drawings for improvements to the DAF and Secondary Clarifier

Know what's **below.**
Call before you dig.

MALAGA COUNTY WATER DISTRICT

FRESNO COUNTY STATE OF CALIFORNIA

WASTEWATER TREATMENT PLANT

SECONDARY CLARIFIER REPLACEMENT IMPROVEMENTS

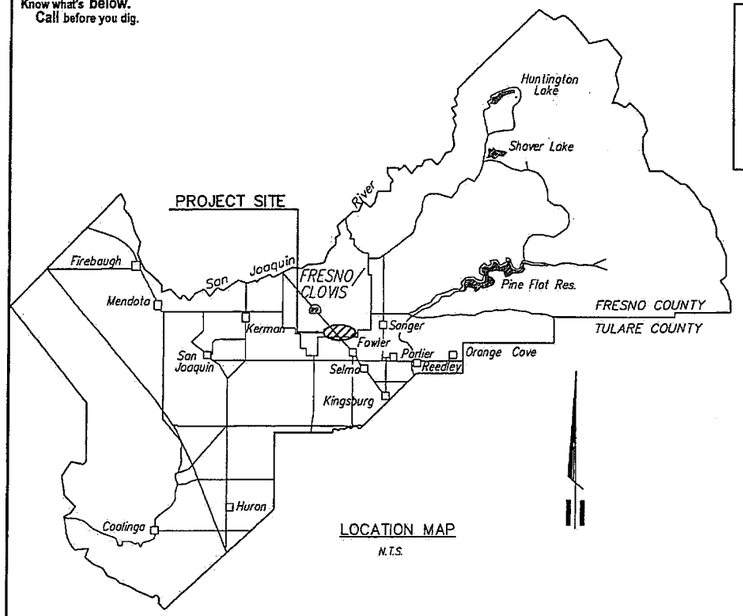

LOCATION MAP

N.T.S.

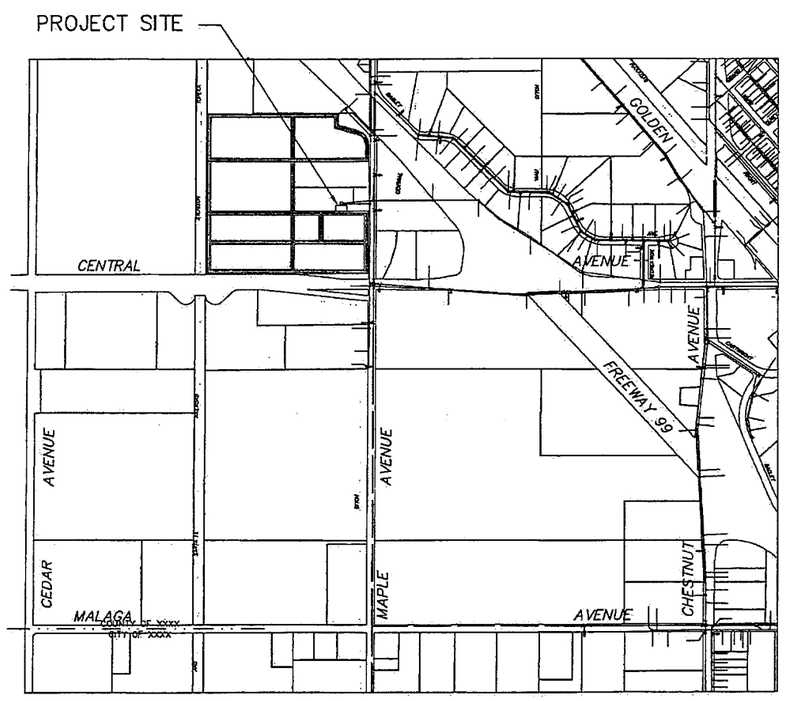

VICINITY MAP

N.T.S.

GENERAL NOTES

1. MCWD (559)485-7353 shall be contacted at least 48 hours prior to commencement of work on or near existing District facilities.
2. Used material, rejects, misfits, or seconds, etc. are not acceptable for use on MCWD facilities.
3. All construction shall be in conformance with these plans, project specifications and MCWD specifications.
4. Contractor shall field verify the horizontal and vertical locations of all existing facilities prior to commencing work. Contractor shall make Engineer aware of any discrepancies.
5. All steel pipe and fittings shall be furnished with a shop applied high solids epoxy coating on the interior and exterior, unless otherwise indicated. All other exposed steel shall be painted with a pre-treatment primer, an undercoat and a final coat of paint in accordance with MCWD specifications.
6. All construction shall be performed in accordance with applicable health and safety laws of the State of California and CAL/OSHA standards.
7. Contractor will be responsible for the repair of all pipeline cracks, which develop during construction of improvements affecting existing facilities.
8. All excess material and/or debris shall be removed upon completion of installation.
9. Contractor shall be responsible for providing adequate dust control at all times.

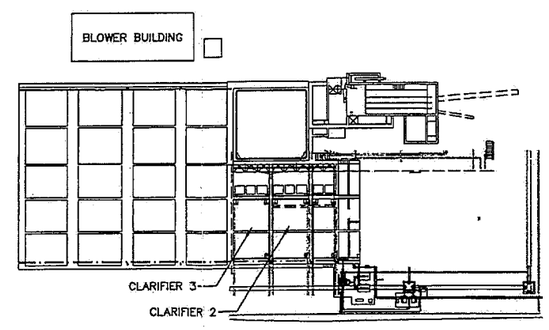

PLANT LOCATION MAP

N.T.S.

CONSULTING ENGINEERS AND LAND SURVEYORS OF CALIFORNIA

Construction Contractor agrees that in accordance with generally accepted construction practices, construction Contractor will be required to assume sole and complete responsibility for job site conditions during the course of construction of the project, including safety of all persons and property, that this requirement shall be made to apply continuously and not be limited to normal working hours, and construction Contractor further agrees to defend, indemnify and hold design professional harmless from any and all liability, real and alleged, in connection with the performance of work on this project, excepting liability arising from the sole negligence of design professional.

SPECIAL NOTE

Where underground and surface structures are shown on the plans, the locations, depth and dimensions of structures are believed to be reasonably correct, but are not guaranteed. such structures are shown for the information of the Contractor, but information so given is not to be construed as a representation that such structures will, in all cases, be found where shown, or that they represent all of the structures which may be encountered.

SITE SAFETY AND PROTECTION NOTES

The duty of the Engineer, Owner or its agents to conduct construction review of the Contractor's performance and the undertaking of inspections or the giving of instructions as authorized herein is not intended to include review of the adequacy of the Contractor's safety measures in, on, or near the construction site and shall not be construed as supervision of the actual construction nor make the Engineer, Owner or its agents responsible for providing a safe place for the performance of work by the Contractor, subcontractors, or suppliers, or for access, visits, use, work, travel or occupancy by any person.

The Contractor shall have at the work site, copies or suitable extracts of Construction Safety Orders, issued by Cal-OSHA. He shall comply with provisions of these and all other applicable laws, ordinances and regulations. The Contractor must comply with provisions of the safety and health regulations for construction, promulgated by the Secretary of Labor under Section 107 of the Contract Work Hours and Safety Standards Act, as set forth in Title 29 C.F.R.

To protect the lives and health of his employees under the Contract, the Contractor shall comply with all pertinent provisions of the "Manual of Accident Prevention in Construction" issued by the Associated General Contractors of America, Inc., and shall maintain an accurate record of all cases of death, occupational disease, and injury requiring medical attention or causing loss of time from work, arising out of and in the course of employment or work under the Contract.

The Contractor alone shall be responsible for the safety, efficiency, and adequacy of his facilities, appliances, and methods and for any damage, which may result from their failure or their improper construction, maintenance or operation.

The Contractor agrees that it shall assume sole and complete responsibility for job site conditions during the course of construction of this project, including safety of all persons and property, that this requirement shall apply continuously and not be limited to normal working hours; and that the Contractor shall defend, indemnify and hold the Owner, Provost & Pritchard Engineering Group, Inc., and their respective agents harmless from any and all liability, real or alleged, in connection with the performance of work on this project, excepting for liability arising from the sole negligence of Owner, Engineer, or their respective agents.

The Owner and its agents' site responsibilities are limited solely to the activities of their employees on site. These responsibilities shall not be inferred by any party to mean that the Owner or its agents have responsibility for site safety. Safety in, on, or about the site is the sole and exclusive responsibility of the Contractor alone. The Contractor's methods of work performance, superintendence and the Contractor's employees, and sequencing of construction are also the sole and exclusive responsibilities of the Contractor alone.

BOARD OF DIRECTORS

PRESIDENT CHARLES E. GARABEDIAN

VICE PRESIDENT SALVADOR CERRILLO
IRMA CASTANEDA
FRANK CERRILLO JR.
FRANK SOTO

GENERAL-MANAGER RUSS HOLCOMB

Sheet List Table	
Sheet Number	Sheet Description
CV1	COVER SHEET
DT1	DEMOLITION PLAN
DT2	SECTIONS

COPYRIGHT 2008 BY PROVOST & PRITCHARD
The Plans, Specifications, and Contract Documents prepared by Provost & Pritchard Engineering Group, Inc. expressly reserve its common law copyright and other property rights in these documents. These plans are not to be reproduced, changed, or copied in any form or manner whatsoever, nor are they to be assigned to any third parties, without first obtaining the written permission and consent of Provost & Pritchard Engineering Group, Inc. In the event of unauthorized reuse of these plans by a third party, the third party shall hold the Engineer of Record harmless for any liability caused by the unauthorized reuse of these plans by a third party. The third party shall also be responsible for paying all legal fees and other costs associated with defending and enforcing these rights.

RECORD DOCUMENT
DATE: 1-26-2011
THESE RECORD DOCUMENTS HAVE BEEN PREPARED IN PART, ON THE BASIS OF INFORMATION COMPILED AND FURNISHED BY OTHERS. THE ENGINEER WILL NOT BE RESPONSIBLE FOR ANY ERRORS OR OMMISSIONS WHICH HAVE BEEN INCORPORATED INTO THIS DOCUMENT AS A RESULT.

No.	REVISION	BY	DATE

REGISTERED PROFESSIONAL ENGINEER — MICHAEL G. TAYLOR — No. 39,961 — Civil — STATE OF CALIFORNIA

DATE SIGNED: _____

WASTEWATER TREATMENT PLANT
MALAGA COUNTY WATER DISTRICT
FRESNO COUNTY STATE OF CALIFORNIA
SECONDARY CLARIFIER REPLACEMENT IMPROVEMENTS
COVER SHEET

EST. 1968 PROVOST & PRITCHARD
ENGINEERING GROUP
An Employee Owned Company
286 WEST CROMWELL AVENUE
FRESNO, CALIFORNIA 93711-6162
559/449-2700 FAX 559/449-2715
www.provostandpritchard.com

DESIGN ENGINEER: MGT
LICENSE NO: CE 39,961
DRAFTED BY: SML
CHECKED BY: DRC
SCALE: AS SHOWN
DATE: 05/28/08
JOB NO: 10570801
DWG. NO:
SHEET CV1 OF 3

1/26/2011 12:07 PM G:\Clients\Malaga CWD - 10571\10570801-Secondary Clarifier\DWG\SHEET\10570801-CM-Clarifier Cover.dwg -Doug Mackell

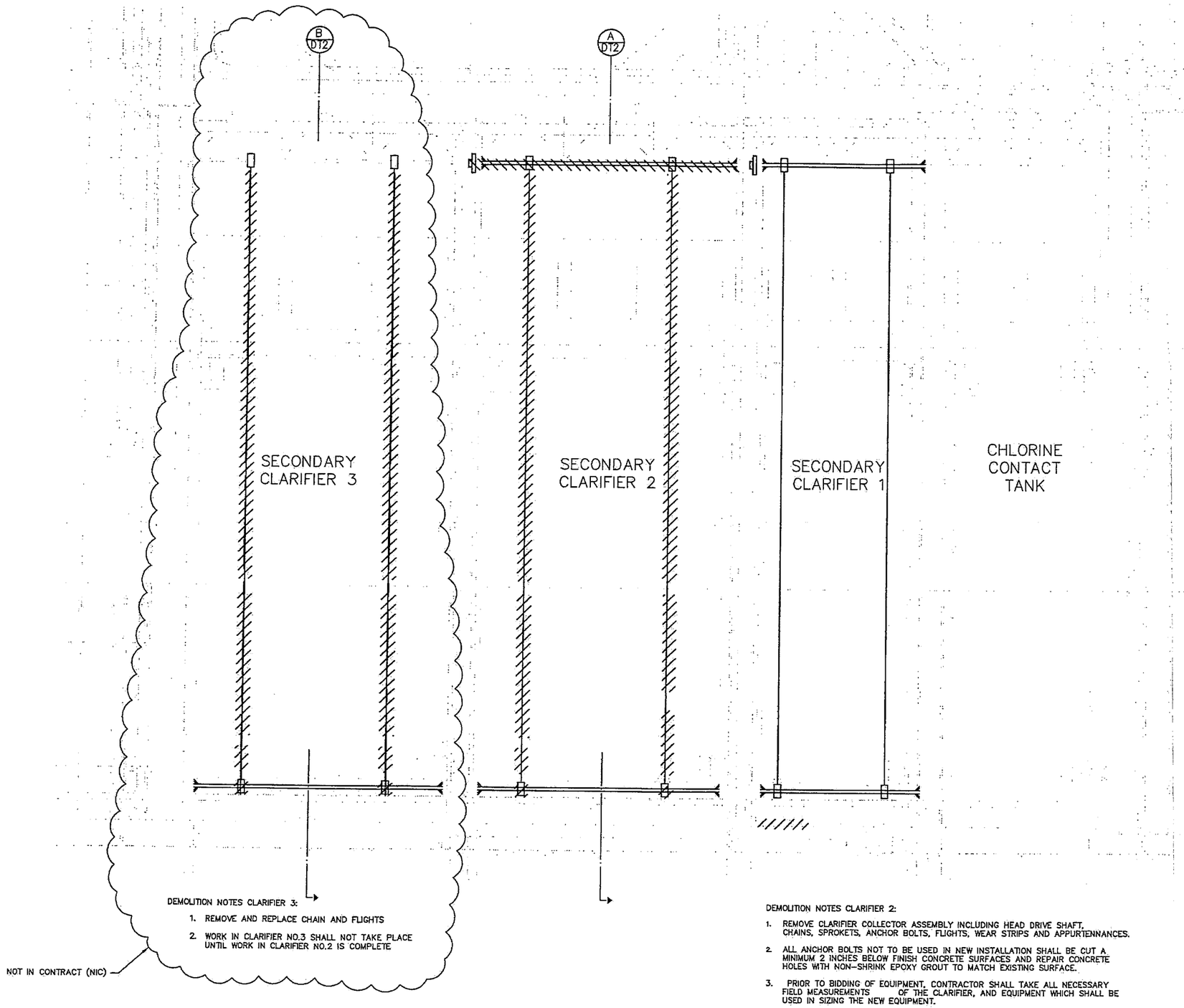

DEMOLITION NOTES CLARIFIER 3:

1. REMOVE AND REPLACE CHAIN AND FLIGHTS
2. WORK IN CLARIFIER NO.3 SHALL NOT TAKE PLACE UNTIL WORK IN CLARIFIER NO.2 IS COMPLETE

DEMOLITION NOTES CLARIFIER 2:

1. REMOVE CLARIFIER COLLECTOR ASSEMBLY INCLUDING HEAD DRIVE SHAFT, CHAINS, SPROKETS, ANCHOR BOLTS, FLIGHTS, WEAR STRIPS AND APPURTENNANCES.
2. ALL ANCHOR BOLTS NOT TO BE USED IN NEW INSTALLATION SHALL BE CUT A MINIMUM 2 INCHES BELOW FINISH CONCRETE SURFACES AND REPAIR CONCRETE HOLES WITH NON-SHRINK EPOXY GROUT TO MATCH EXISTING SURFACE.
3. PRIOR TO BIDDING OF EQUIPMENT, CONTRACTOR SHALL TAKE ALL NECESSARY FIELD MEASUREMENTS OF THE CLARIFIER, AND EQUIPMENT WHICH SHALL BE USED IN SIZING THE NEW EQUIPMENT.

N

SCALE IN FEET

0 2' 4' 8'

RECORD DOCUMENT
DATE: 1-26-2011

THESE RECORD DOCUMENTS HAVE BEEN PREPARED IN PART, ON THE BASIS OF INFORMATION COMPILED AND FURNISHED BY OTHERS. THE ENGINEER WILL NOT BE RESPONSIBLE FOR ANY ERRORS OR OMMISSIONS WHICH HAVE BEEN INCORPORATED INTO THIS DOCUMENT AS A RESULT.

No.	REVISION	BY	DATE

REGISTERED PROFESSIONAL ENGINEER
MICHAEL G. TAYLOR
No. 39,961
Exp. 12/31/10
Civil
STATE OF CALIFORNIA

DATE SIGNED: _____

WASTEWATER TREATMENT PLANT

MALAGA COUNTY WATER DISTRICT
FRESNO COUNTY STATE OF CALIFORNIA

SECONDARY CLARIFIER REPLACEMENT
IMPROVEMENTS
DEMOLITION PLAN

EST. 1968
PROVOST & PRITCHARD
ENGINEERING GROUP
An Employee Owned Company
286 WEST CROWELL AVENUE
FRESNO, CALIFORNIA 93711-6162
559/449-2700 FAX: 559/449-2715
www.ppeng.com

DESIGN ENGINEER: MGT	
LICENSE NO: CE 39,961	
DRAFTED BY: SML	CHECKED BY: DRC
SCALE: AS SHOWN	
DATE: 05/28/08	
JOB NO: 10570801	
DWG. NO:	
SHEET DT1 OF 3	

1/26/2011 12:07 PM G:\Clients\Malaga CWD - 1057\10570801-Secondary Clarifier\DWG\SHEET\10570801-Demolition and Sections.dwg -Dave MacNall

Know what's below. Call before you dig.

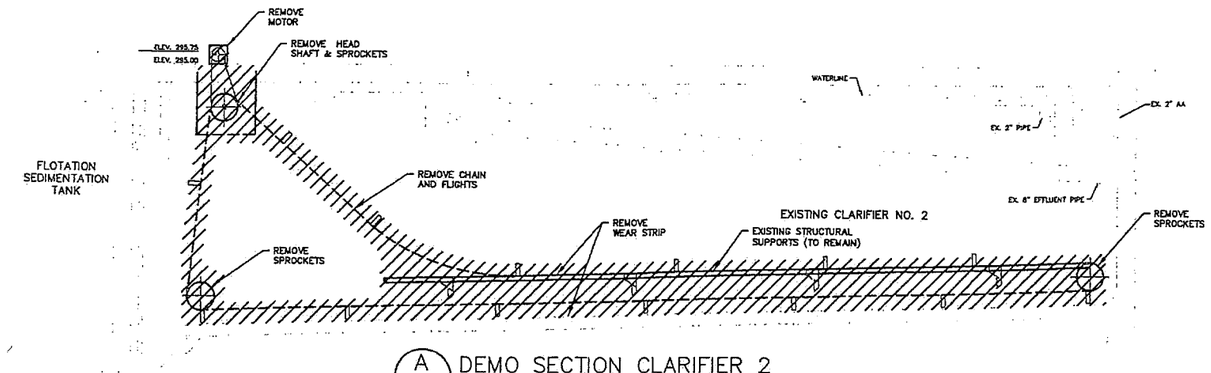

A — 1/4"=1'-0"
DEMO SECTION CLARIFIER 2

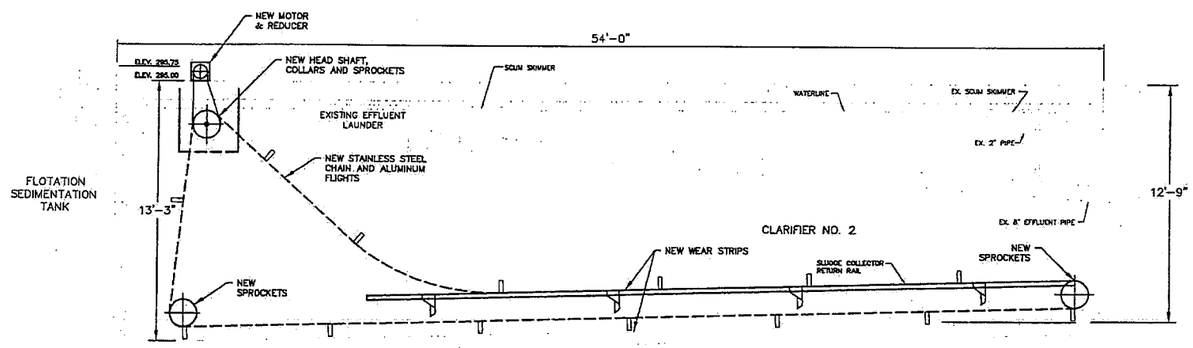

A — 1/4"=1'-0"
CHAIN AND FLIGHT INSTALLATION CLARIFIER 2

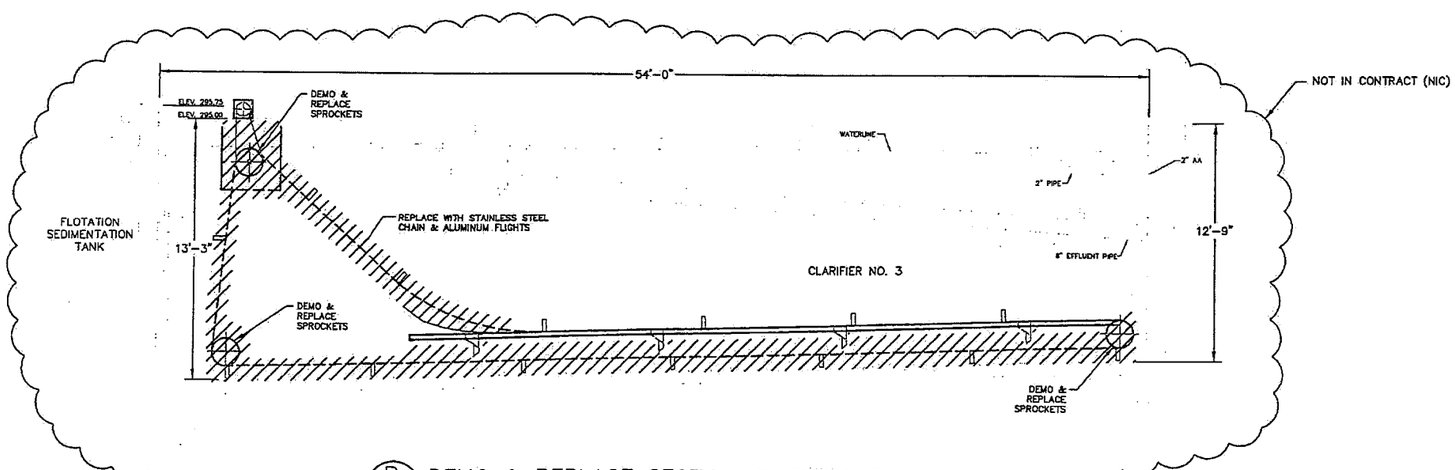

B — 1/4"=1'-0"
DEMO & REPLACE SECTION CLARIFIER 3

COPYRIGHT 2008 BY PROVOST & PRITCHARD ENGINEERING GROUP, INC. ALL RIGHTS RESERVED
The firm of Provost & Pritchard Engineering Group, Inc. expressly reserves its common law copyright and other property rights in these plans, specifications, and estimates. These plans, specifications, and estimates may not be used by any person or entity for any purpose without the express written permission and consent of Provost & Pritchard Engineering Group, Inc. Any use of these documents by any person or entity, for any purpose, without the express written consent of Provost & Pritchard Engineering Group, Inc., is a violation of law. The blind party shall hold the firm of Provost & Pritchard Engineering Group, Inc. harmless, and shall bear the cost of Provost & Pritchard Engineering Group, Inc.'s legal fees associated with defending such unlawful use.

RECORD DOCUMENT
DATE: 1-26-2011
THESE RECORD DOCUMENTS HAVE BEEN PREPARED IN PART ON THE BASIS OF INFORMATION COMPILED AND FURNISHED BY OTHERS. THE ENGINEER WILL NOT BE RESPONSIBLE FOR ANY ERRORS OR OMMISSIONS WHICH HAVE BEEN INCORPORATED INTO THIS DOCUMENT AS A RESULT.

No.	REVISION	BY	DATE

REGISTERED PROFESSIONAL ENGINEER — MICHAEL G. TAYLOR — No. 39,961 — Civil — EXPIRES 12/31/08 — STATE OF CALIFORNIA

DATE SIGNED: ____

WASTEWATER TREATMENT PLANT
MALAGA COUNTY WATER DISTRICT
FRESNO COUNTY STATE OF CALIFORNIA
SECONDARY CLARIFIER REPLACEMENT IMPROVEMENTS
SECTIONS

PROVOST & PRITCHARD ENGINEERING GROUP
EST. 1968
An Employee Owned Company
286 WEST CROMWELL AVENUE
FRESNO, CALIFORNIA 93711-6162
559/449-2700 FAX 559/449-2715
www.provpritch.com

DESIGN ENGINEER: MGT	
LICENSE NO: CE 39,961	
DRAFTED BY: SML	CHECKED BY: DRC
SCALE: AS SHOWN	
DATE: 05/28/08	
JOB NO: 10570801	
DWG. NO:	
SHEET DT2 OF 3	

1/26/2011 12:07 PM G:\Clients\Malaga CWD - 1057\10570801-Secondary Clarifier\DWG\SHEET\10570801-DT-Chain and Flight Replace.dwg -Doug MacNeill

Know what's below.
Call before you dig.

MALAGA COUNTY WATER DISTRICT

FRESNO COUNTY

MALAGA WWTP

DISSOLVED AIR FLOTATION CLARIFIER IMPROVEMENTS

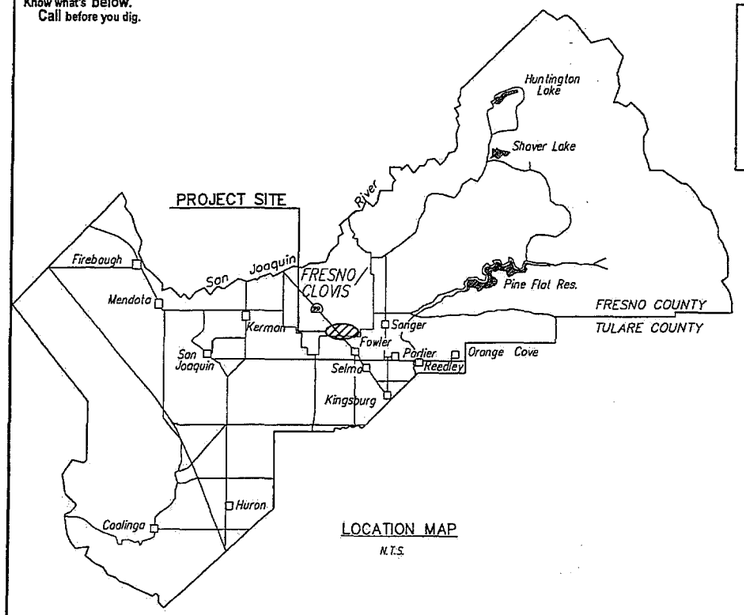

LOCATION MAP
N.T.S.

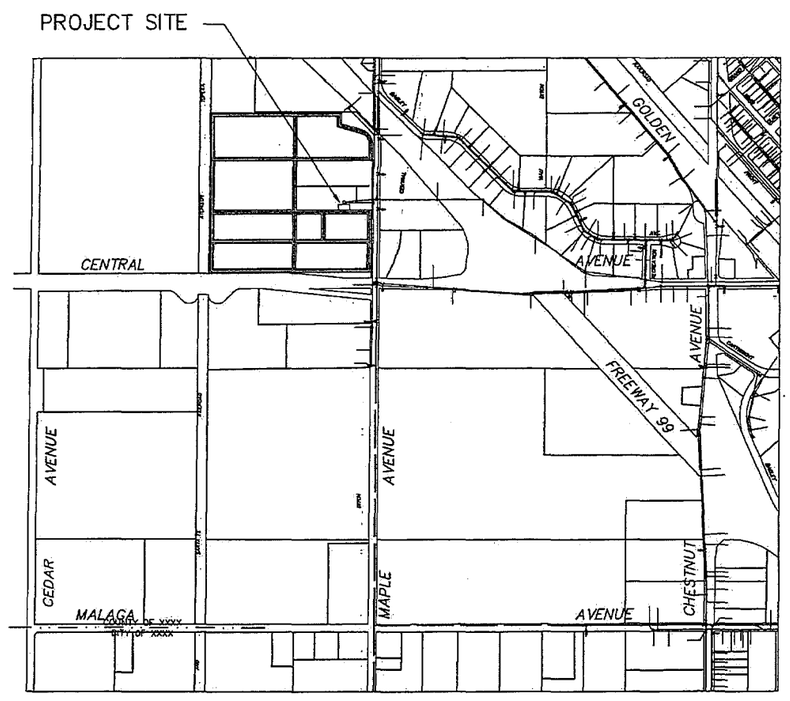

VICINITY MAP
N.T.S.

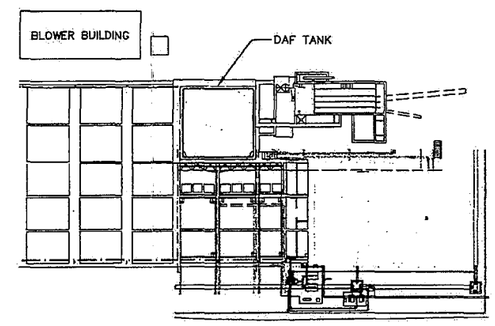

PLANT LOCATION MAP
N.T.S.

GENERAL NOTES

1. MCWD (559)485-7353 shall be contacted at least 48 hours prior to commencement of work on or near existing District facilities.
2. Used material, rejects, misfits, or seconds, etc. are not acceptable for use on MCWD facilities.
3. All construction shall be in conformance with these plans, project specifications and MCWD specifications.
4. Contractor shall field verify the horizontal and vertical locations of all existing facilities prior to commencing work. Contractor shall make Engineer aware of any discrepancies.
5. All steel pipe and fittings shall be furnished with a shop applied high solids epoxy coating on the interior and exterior, unless otherwise indicated. All other exposed steel shall be painted with a pre-treatment primer, an undercoat and a final coat of paint in accordance with MCWD specifications.
6. All construction shall be performed in accordance with applicable health and safety laws of the State of California and CAL/OSHA standards.
7. Contractor will be responsible for the repair of all pipeline cracks, which develop during construction of improvements affecting existing facilities.
8. All excess material and/or debris shall be removed upon completion of installation.
9. Contractor shall be responsible for providing adequate dust control at all times.

CONSULTING ENGINEERS AND LAND SURVEYORS OF CALIFORNIA

Construction Contractor agrees that in accordance with generally accepted construction practices, construction Contractor will be required to assume sole and complete responsibility for job site conditions during the course of construction of the project, including safety of all persons and property, that this requirement shall be made to apply continuously and not be limited to normal working hours, and construction Contractor further agrees to defend, indemnify and hold design professional harmless from any and all liability, real and alleged, in connection with the performance of work on this project, excepting liability arising from the sole negligence of design professional.

SPECIAL NOTE

Where underground and surface structures are shown on the plans, the locations, depth and dimensions of structures are believed to be reasonably correct, but are not guaranteed. such structures are shown for the information of the Contractor, but information so given is not to be construed as a representation that such structures will, in all cases, be found where shown, or that they represent all of the structures which may be encountered.

SITE SAFETY AND PROTECTION NOTES

The duty of the Engineer, Owner or its agents to conduct construction review of the Contractor's performance and the undertaking of inspections or the giving of instructions as authorized herein is not intended to include review of the adequacy of the Contractor's safety measures in, on, or near the construction site and shall not be construed as supervision of the actual construction nor make the Engineer, Owner or its agents responsible for providing a safe place for the performance of work by the Contractor, subcontractors, or suppliers, or for access, visits, use, work, travel or occupancy by any person.

The Contractor shall have at the work site, copies or suitable extracts of Construction Safety Orders, issued by Cal-OSHA. He shall comply with provisions of these and all other applicable laws, ordinances and regulations. The Contractor must comply with provisions of the safety and health regulations for construction, promulgated by the Secretary of Labor under Section 107 of the Contract Work Hours and Safety Standards Act, as set forth in Title 29 C.F.R.

To protect the lives and health of his employees under the Contract, the Contractor shall comply with all pertinent provisions of the "Manual of Accident Prevention in Construction" issued by the Associated General Contractors of America, Inc., and shall maintain an accurate record of all cases of death, occupational disease, and injury requiring medical attention or causing loss of time from work, arising out of and in the course of employment or work under the Contract.

The Contractor alone shall be responsible for the safety, efficiency, and adequacy of his facilities, appliances, and methods and for any damage, which may result from their failure or their improper construction, maintenance or operation.

The Contractor agrees that it shall assume sole and complete responsibility for job site conditions during the course of construction of this project, including safety of all persons and property, that this requirement shall apply continuously and not be limited to normal working hours; and that the Contractor shall defend, indemnify and hold the Owner, Provost & Pritchard Engineering Group, Inc., and their respective agents harmless from any and all liability, real or alleged, in connection with the performance of work on this project, excepting for liability arising from the sole negligence of Owner, Engineer, or their respective agents.

The Owner and its agents' site responsibilities are limited solely to the activities of their employees on site. These responsibilities shall not be inferred by any party to mean that the Owner or its agents have responsibility for site safety. Safety in, on, or about the site is the sole and exclusive responsibility of the Contractor alone. The Contractor's methods of work performance, superintendence and the Contractor's employees, and sequencing of construction are also the sole and exclusive responsibilities of the Contractor alone.

BOARD OF DIRECTORS

PRESIDENT CHARLES E. GARABEDIAN

VICE PRESIDENT SALVADOR CERRILLO
IRMA CASTANEDA
FRANK CERRILLO JR.
FRANK SOTO

GENERAL-MANAGER RUSS HOLCOMB

Sheet List Table	
Sheet Number	Sheet Description
CV1	COVER SHEET
DT1	EXISTING DAF FACILITIES
DT2	DAF PLAN
DT3	DAF SECTIONS
DT4	DAF DETAILS
DT5	PHOTOGRAPHS

COPYRIGHT 2008 by PROVOST & PRITCHARD
CONSULTING GROUP, ENGINEERS & LAND SURVEYORS
Provost & Pritchard Engineering Group, Inc. expressly reserves its common law copyright and other property rights in these plans. These plans are not to be reproduced, changed, or copied in any form or manner whatsoever, nor are they to be assigned to any third party without first obtaining the written permission and consent of Provost & Pritchard Engineering Group, Inc. In the event of unauthorized reuse of these plans by a third party, the third party shall hold the firm of Provost & Pritchard harmless for any damages resulting therefrom. Provost & Pritchard Engineering Group, Inc. shall bar the cost of Provost & Pritchard Engineering Group, Inc.'s legal fees associated with defending and enforcing these rights.

RECORD DOCUMENT
DATE: 1-26-2011
THESE RECORD DOCUMENTS HAVE BEEN PREPARED IN PART ON THE BASIS OF INFORMATION COMPILED AND FURNISHED BY OTHERS. THE ENGINEER WILL NOT BE RESPONSIBLE FOR ANY ERRORS OR OMMISSIONS WHICH HAVE BEEN INCORPORATED INTO THIS DOCUMENT AS A RESULT.

No.	REVISION	BY	DATE

REGISTERED PROFESSIONAL ENGINEER — MICHAEL G. TAYLOR — No. 39,961 — CIVIL — STATE OF CALIFORNIA

DATE SIGNED:

MALAGA WWTP
DAF IMPROVEMENTS
MALAGA COUNTY WATER DISTRICT
FRESNO COUNTY

MALAGA COUNTY WATER DISTRICT

COVER SHEET

EST. 1968
PROVOST & PRITCHARD
ENGINEERING GROUP
An Employee Owned Company
286 WEST CROMWELL AVENUE,
FRESNO, CALIFORNIA 93711-6162
559/449-2700 FAX 559/449-2715
www.provpri.com

DESIGN ENGINEER: MGT
LICENSE NO: CE 39,961
DRAFTED BY: SML
CHECKED BY: MGT
SCALE: AS SHOWN
DATE: 12/02/08
JOB NO: 10570801
DWG. NO:
SHEET CV1 OF 5

1/26/2011 12:02 PM G:\Clients\Malaga CWD - 10570\10570801-DAF Leak Repair\DWG\SHEET\10570801-GN-DAF Repairs Cover.dwg -Doug MacNeil

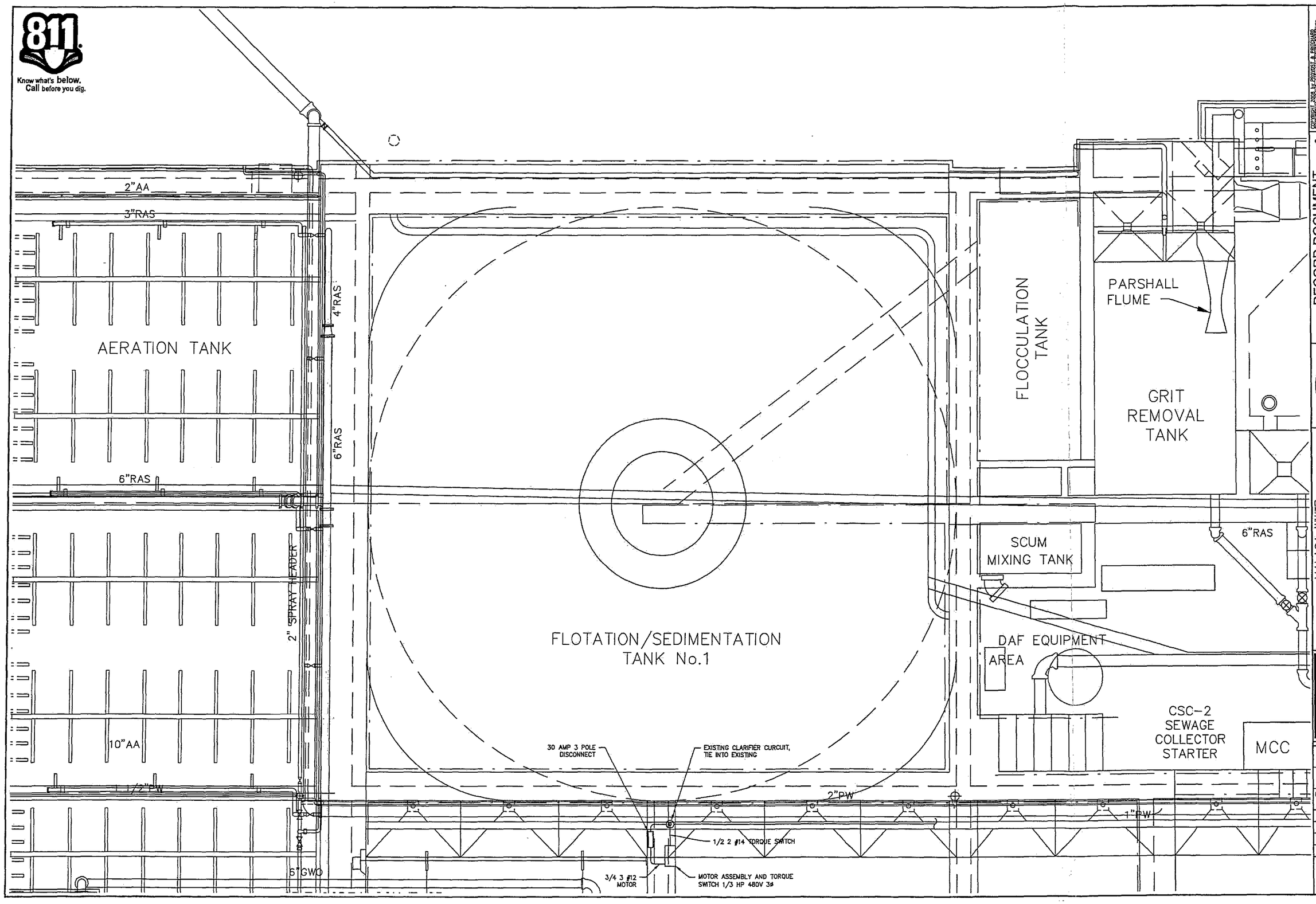

COPYRIGHT 2008 by PROVOST & PRITCHARD ENGINEERING GROUP, INC. ALL RIGHTS RESERVED
The firm of Provost & Pritchard Engineering Group, Inc. retains all rights to these plans, specifications and other applicable property rights in these plans. These plans are not to be reproduced, changed, or copied in any form or manner whatsoever, nor are they to be assigned to a third party without first obtaining the expressed written consent of Provost & Pritchard Engineering Group, Inc. In the event of unauthorized reuse of these plans by a third party, the third party agrees to hold Provost & Pritchard Engineering Group, Inc. harmless, and shall bear the cost of Provost & Pritchard Engineering Group, Inc. defending and enforcing these rights.

RECORD DOCUMENT
DATE: 1-26-2011
THESE RECORD DOCUMENTS HAVE BEEN PREPARED IN PART, ON THE BASIS OF INFORMATION COMPILED AND FURNISHED BY OTHERS. THE ENGINEER WILL NOT BE RESPONSIBLE FOR ANY ERRORS OR OMMISSIONS WHICH HAVE BEEN INCORPORATED INTO THIS DOCUMENT AS A RESULT.

No.	REVISION	BY	DATE

REGISTERED PROFESSIONAL ENGINEER MICHAEL G. TAYLOR No. 39961 CIVIL STATE OF CALIFORNIA
DATE SIGNED:

MALAGA WWTP
DAF IMPROVEMENTS
MALAGA COUNTY WATER DISTRICT
FRESNO COUNTY

MALAGA COUNTY WATER DISTRICT

EXISTING FACILITIES

EST. 1968
PROVOST & PRITCHARD
ENGINEERING GROUP
An Employee Owned Company
288 WEST CROMWELL AVENUE
FRESNO, CALIFORNIA 93711-6162
559/449-2700 FAX 559/449-2715
www.provpritch.com

DESIGN ENGINEER: MGT
LICENSE NO: CE 39,961
DRAFTED BY: SML
CHECKED BY: MGT
SCALE: AS SHOWN
DATE: 12/02/08
JOB NO: 10570801
DWG. NO:
SHEET
DT1 OF 5

1/26/2011 12:02 PM G:\Clients\Malaga CWD - 1057\10570801-DT-DAF Leak Repair\DWG\SHEET\10570801-DT-DAF Repairs Details 01.dwg - Doug Hackell

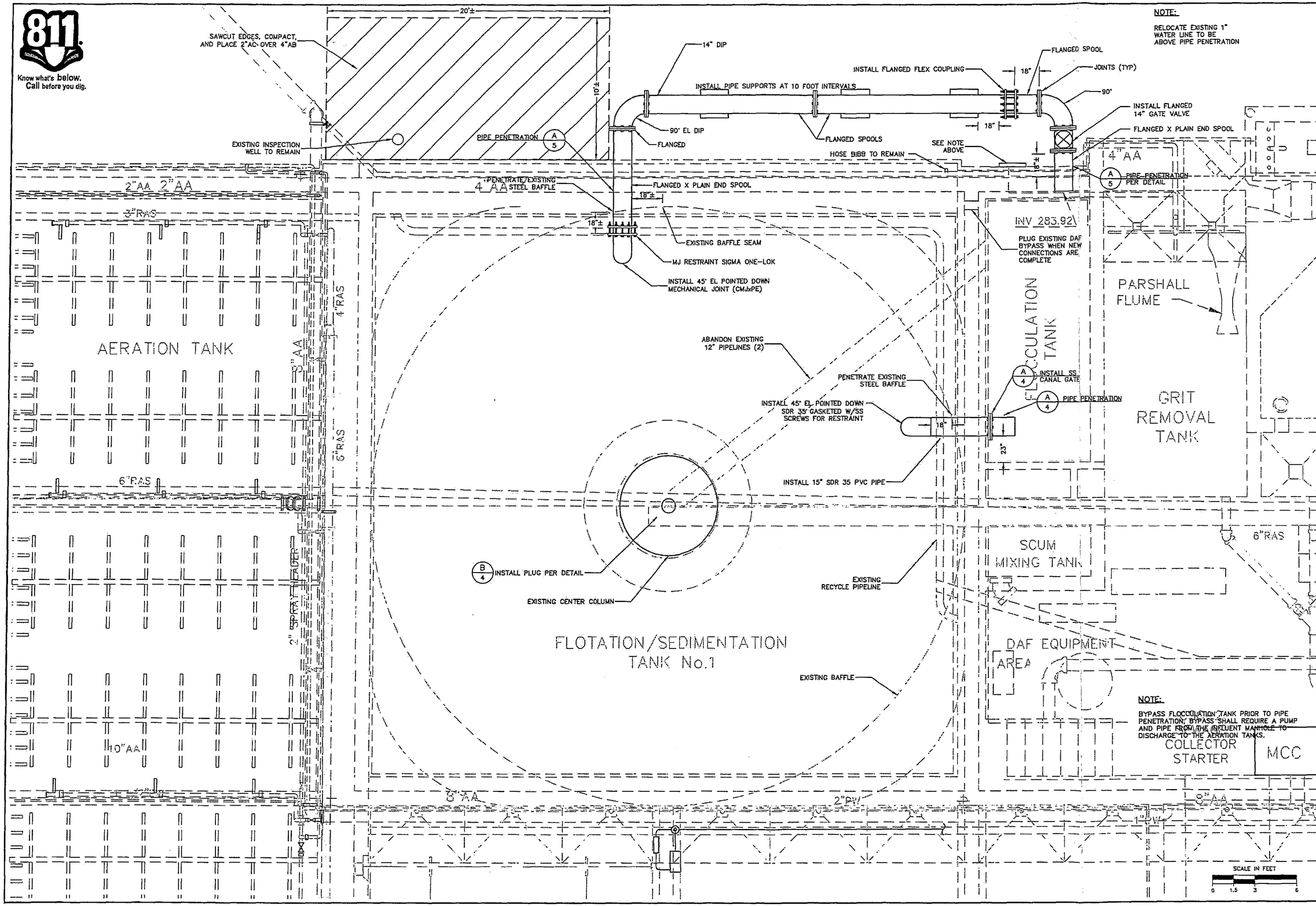

NOTE:

RELOCATE EXISTING 1" WATER LINE TO BE ABOVE PIPE PENETRATION

NOTE:

BYPASS FLOCCULATION TANK PRIOR TO PIPE PENETRATION; BYPASS SHALL REQUIRE A PUMP AND PIPE FROM THE INFLUENT MANHOLE TO DISCHARGE TO THE AERATION TANKS.

COPYRIGHT 2008 BY PROVOST & PRITCHARD ENGINEERING GROUP, INC. All rights reserved. The firm of Provost & Pritchard Engineering Group, Inc. expressly reserves its common law copyright and other property rights in these plans. These plans are not to be reproduced, changed, or copied in any form or manner whatsoever, nor are they to be assigned to a third party without first obtaining the written permission and consent of Provost & Pritchard Engineering Group, Inc. In the event of unauthorized reuse of these plans by a third party, the third party agrees to hold harmless, and shall bear the cost of Provost & Pritchard Engineering Group, Inc. for any damages associated with defending and enforcing these rights.

RECORD DOCUMENT

DATE: 1-26-2011

THESE RECORD DOCUMENTS HAVE BEEN PREPARED IN PART ON THE BASIS OF INFORMATION COMPILED AND FURNISHED BY OTHERS. THE ENGINEER WILL NOT BE RESPONSIBLE FOR ANY ERRORS OR OMMISSIONS WHICH HAVE BEEN INCORPORATED INTO THIS DOCUMENT AS A RESULT.

No.	REVISION	BY	DATE

REGISTERED PROFESSIONAL ENGINEER — MICHAEL G. TAYLOR — No. 39961 — EXPIRES 12/31/11 — Civil — STATE OF CALIFORNIA

DATE SIGNED:

MALAGA WWTP

MALAGA COUNTY WATER DISTRICT
FRESNO COUNTY

MALAGA COUNTY WATER DISTRICT

DAF PLAN

PROVOST & PRITCHARD
EST. 1956
ENGINEERING GROUP, INC.
An Employee Owned Company
285 WEST CROMWELL AVENUE
FRESNO, CALIFORNIA 93711-6162
559/449-2700 FAX 559/449-2715
www.ppi-eng.com

DESIGN ENGINEER: MGT	
LICENSE NO: CE 39,961	
DRAFTED BY: SML	CHECKED BY: MGT
SCALE: AS SHOWN	
DATE: 12/02/08	
JOB NO: 10570801	
DWG. NO:	
SHEET DT2 OF 5	

1/27/2011 9:38 AM G:\Clients\Malaga CWD - 1057\10570801-DT-DAF Resize Details 02.dwg -Doug Mockell

Know what's **below.**
Call before you dig.

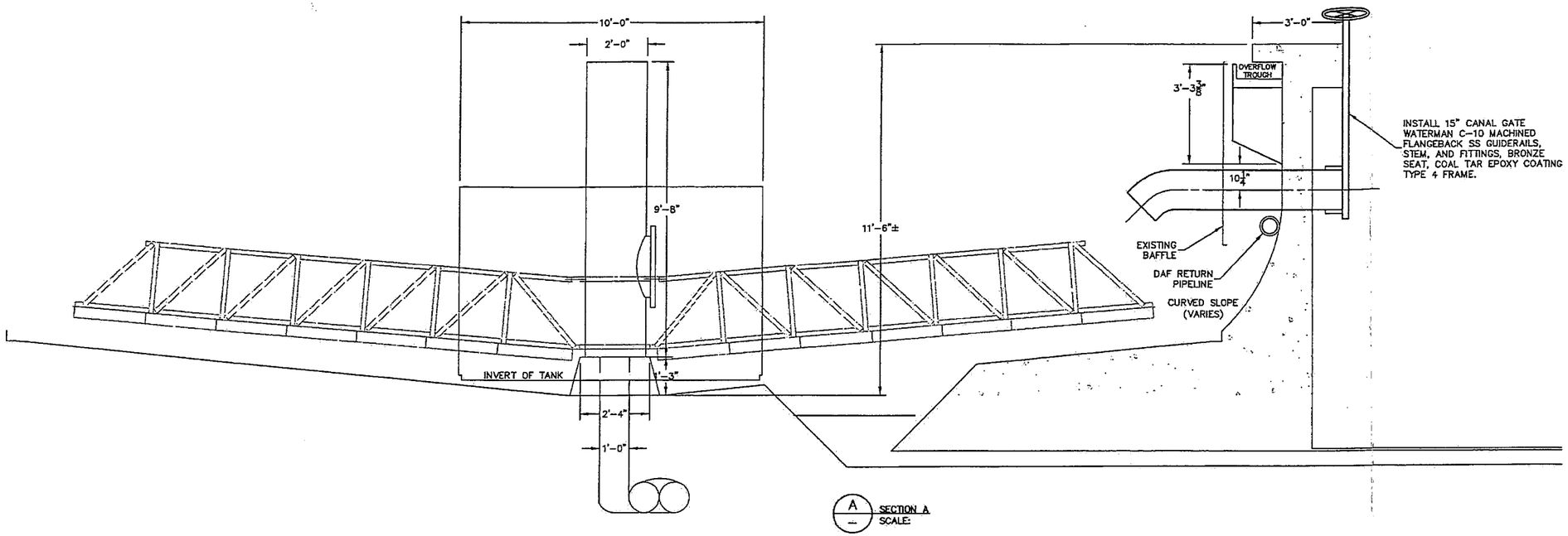

A — SECTION A
SCALE:

10-30-10

THE CENTERLINE OF THE NEW PIPELINES SHALL BE LOCATED 10-1/4" BELOW THE INTERIOR BOTTOM OF THE TROUGH. THE CENTERLINE OF THE PIPELINE PENETRATION THROUGH THE NORTH WALL IS 10-1/4" ABOVE THE 4" PIPE ON THE EXTERIOR WALL.

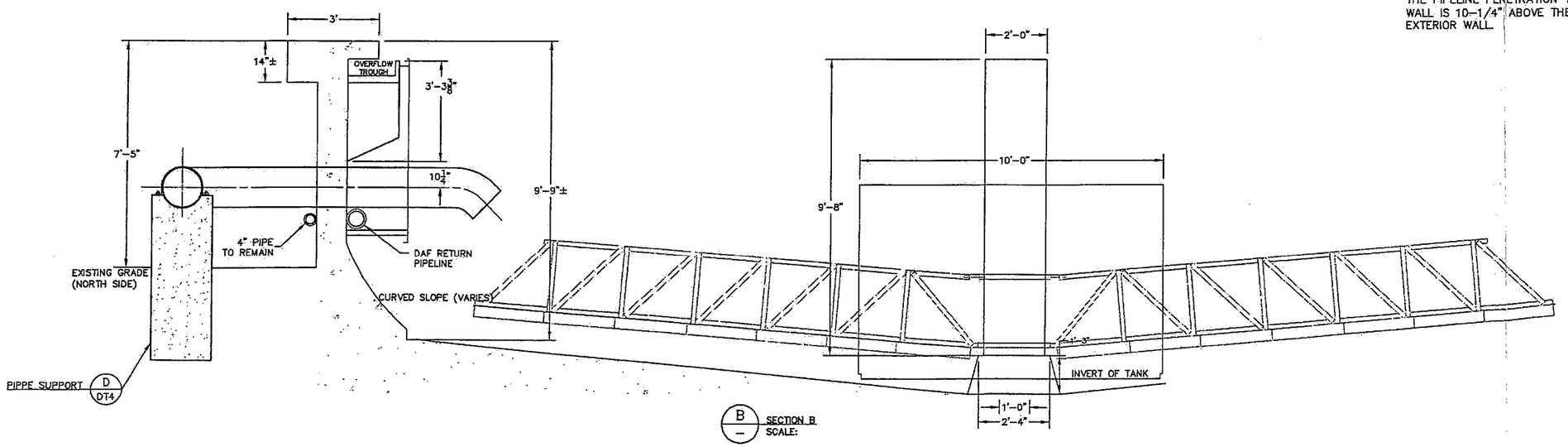

B — SECTION B
SCALE:

SCALE IN FEET
0 1 2 4

COPYRIGHT 2008 by PROVOST & PRITCHARD
The design, details, and specifications shown on this drawing are the property of Provost & Pritchard Engineering Group, Inc. expressly reserves its common law copyright and other property rights in these plans. These drawings and plans are not to be reproduced, changed, or copied in any form or manner whatsoever, nor are they to be assigned to any third party without first obtaining the written permission and consent of Provost & Pritchard Engineering Group, Inc. In the event of unauthorized reuse of these plans by a third party, the third party shall hold the firm of Provost & Pritchard Engineering Group, Inc. harmless and shall bear the cost of Provost & Pritchard Engineering Group, Inc.'s legal fees associated with defending and enforcing these rights.

RECORD DOCUMENT
DATE: 1-26-2011
THESE RECORD DOCUMENTS HAVE BEEN PREPARED IN PART, ON THE BASIS OF INFORMATION COMPILED AND FURNISHED BY OTHERS. THE ENGINEER WILL NOT BE RESPONSIBLE FOR ANY ERRORS OR OMMISSIONS WHICH HAVE BEEN INCORPORATED INTO THIS DOCUMENT AS A RESULT.

No.	REVISION	BY	DATE

REGISTERED PROFESSIONAL ENGINEER — MICHAEL G. TAYLOR — No. 39951 — EXPIRES 12/31/09 — Civil — STATE OF CALIFORNIA

DATE SIGNED:

MALAGA WWTP
DAF IMPROVEMENTS
MALAGA COUNTY WATER DISTRICT
FRESNO COUNTY

MALAGA COUNTY WATER DISTRICT

DAF SECTIONS

PROVOST & PRITCHARD — EST. 1968
ENGINEERING & GISCORP
An Employee Owned Company
288 WEST CROMWELL AVENUE
FRESNO, CALIFORNIA 93711-6162
559/449-2700 FAX 559/449-2715
www.provpritch.com

DESIGN ENGINEER: MGT
LICENSE NO: CE 39,951
DRAFTED BY: SML
CHECKED BY: MGT
SCALE: AS SHOWN
DATE: 12/02/08
JOB NO: 10570801
DWG. NO:
SHEET DT3 OF 5

1/27/2011 9:38 AM G:\Clients\Malaga CWD - 1057\10570801-DT-DAF Leak Repair\DWG\SHEET\10570801-DT-DAF Repairs Details.dwg -Doug MacNeil

Know what's below.
Call before you dig.

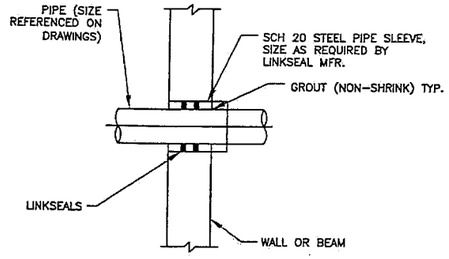

FOR PIPE LARGER THAN 3 INCH DIAMETER

A / DT4 CONCRETE WALL OR BEAM SLEEVE
SCALE: NTS

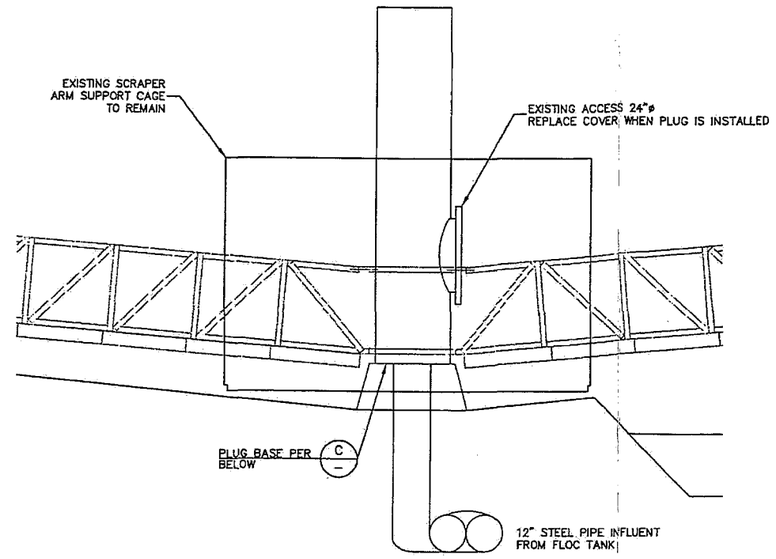

B / DT4 CENTER COLUMN

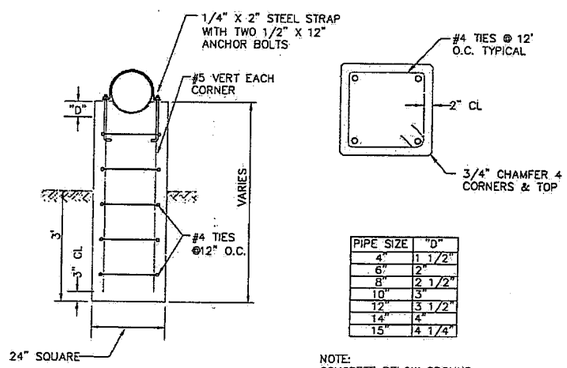

PIPE SIZE	"D"
4"	1 1/2"
6"	2"
8"	2 1/2"
10"	3"
12"	3 1/2"
14"	4"
15"	4 1/4"

NOTE:
CONCRETE BELOW GROUND SURFACE MAY BE POURED WITHOUT FORM IN 28" DRILLED HOLE.

D / DT4 CONCRETE PIPE SUPPORT STAND
SCALE: NTS

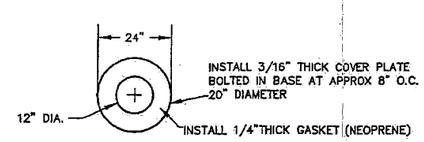

PLACE SIKKA SWELL ABOVE COVER PLATE.
PLACE (8" MIN) NON SHRINK GROUT ABOVE COVER PLATE AND WATERSTOP.

C / DT4 PLAN VIEW OF CENTER COLUMN

SCALE IN FEET
0 1 2 4

NOTE:
BOLT COVER PLATE TO BASE WITH SS BOLTS AT 8" O.C.

COPYRIGHT 2008 by PROVOST & PRITCHARD ENGINEERING GROUP, INC. ALL RIGHTS RESERVED. The firm of Provost & Pritchard Engineering Group, Inc., expressly reserves its common law copyright and other property rights in these plans, specifications, and designs. These plans are not to be reproduced, changed, or copied in any form or manner whatsoever, nor are they to be assigned to any third party without first obtaining the written permission and consent of Provost & Pritchard Engineering Group, Inc. In the event of unauthorized reuse of these plans by a third party, the third party shall hold the firm of Provost & Pritchard Engineering Group, Inc. harmless, and shall bear the cost of Provost & Pritchard Engineering Group, Inc.'s legal expenses incurred with defending and enforcing these rights.

RECORD DOCUMENT
DATE: 1-26-2011
THESE RECORD DOCUMENTS HAVE BEEN PREPARED IN PART ON THE BASIS OF INFORMATION COMPILED AND FURNISHED BY OTHERS. THE ENGINEER WILL NOT BE RESPONSIBLE FOR ANY ERRORS OR OMMISSIONS WHICH HAVE BEEN INCORPORATED INTO THIS DOCUMENT AS A RESULT.

No.	REVISION	BY	DATE

REGISTERED PROFESSIONAL ENGINEER — MICHAEL G. TAYLOR — No. 39951 — EXPIRES 12/31/09 — CIVIL — STATE OF CALIFORNIA

DATE SIGNED:

MALAGA WWTP
MALAGA COUNTY WATER DISTRICT
FRESNO COUNTY
MALAGA COUNTY WATER DISTRICT
DAF DETAILS

EST. 1968
PROVOST & PRITCHARD
ENGINEERING GROUP
An Employee Owned Company
286 WEST CROMWELL AVENUE
FRESNO, CALIFORNIA 93711-6162
559/449-2700 FAX 559/449-2715
www.provpritch.com

DESIGN ENGINEER: MGT
LICENSE NO: CE 39,951
DRAFTED BY: SML
CHECKED BY: MGT
SCALE: AS SHOWN
DATE: 12/02/08
JOB NO: 10570801
DWG. NO:
SHEET DT4 OF 5

1/26/2011 12:03 PM G:\Clients\Malaga CWD - 1057\10570801-DAF Leak Repair\DWG\SHEET\10570801-DT-DAF Repairs Details 04.dwg -Doug MacNeil

811
Know what's below.
Call before you dig.

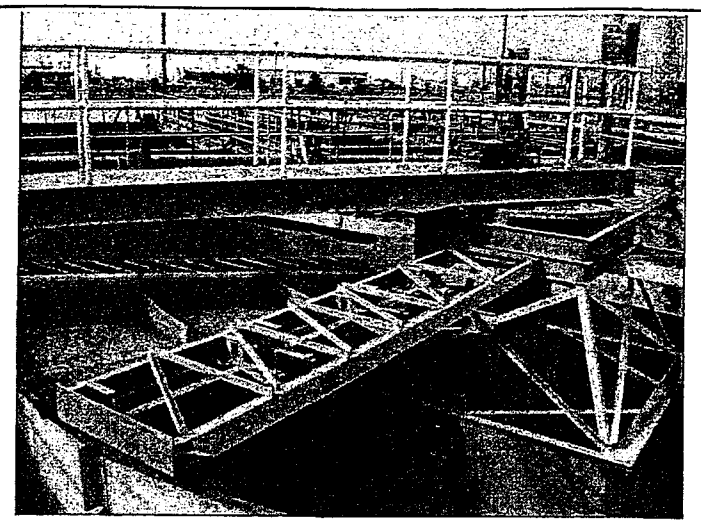

DAF CENTER COLUMN

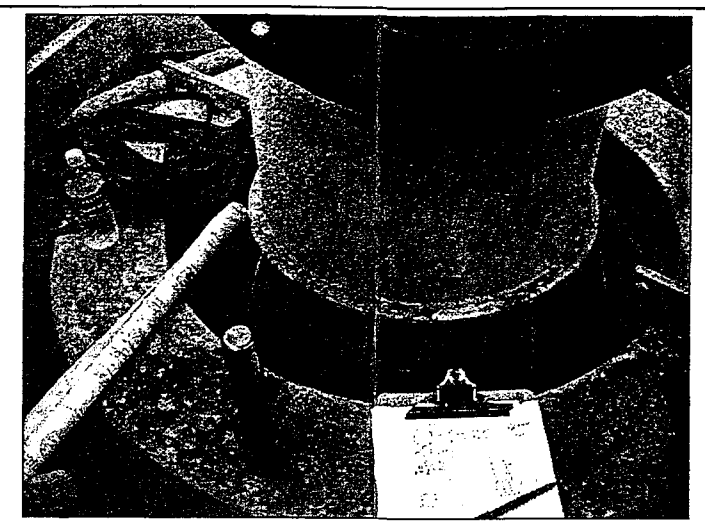

CENTER COLUMN

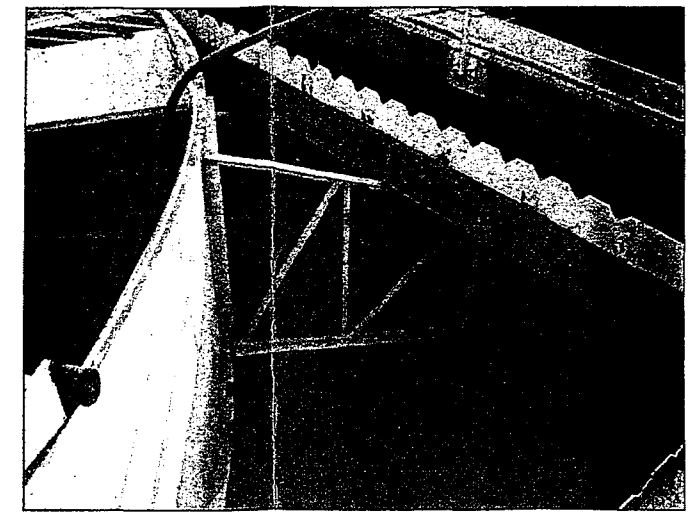

EAST WALL OF DAF

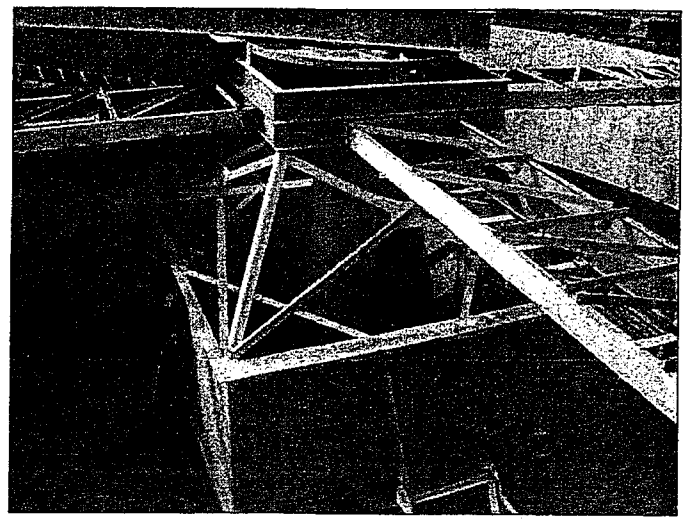

DAF CENTER COLUMN

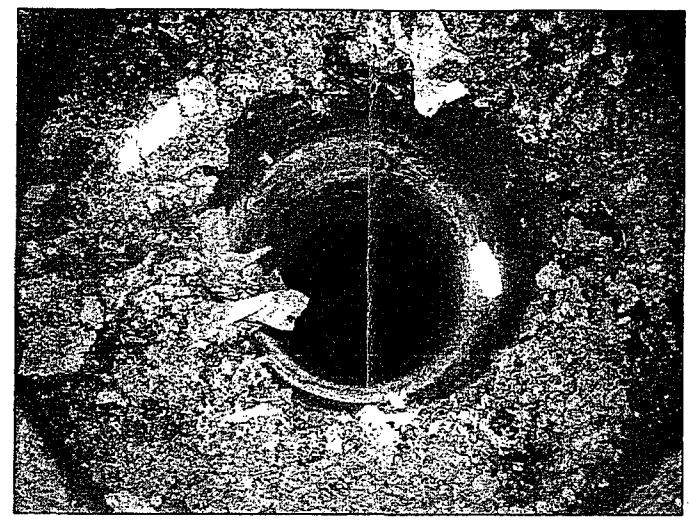

DAF CENTER COLUMN INTERIOR

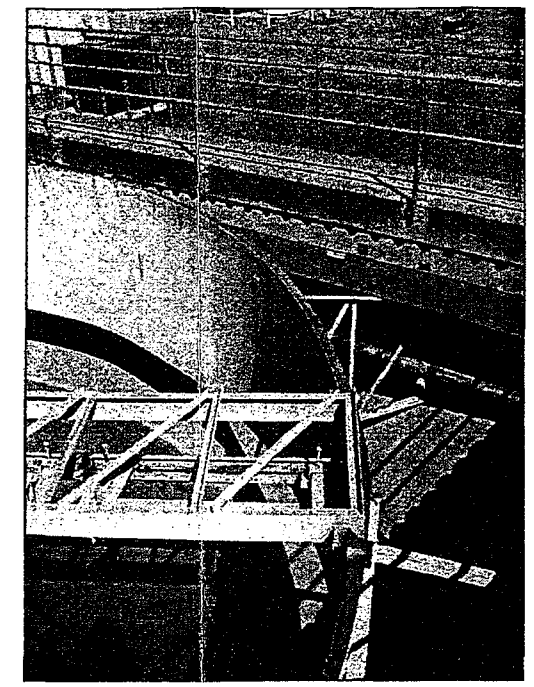

DAF NORTH WALL

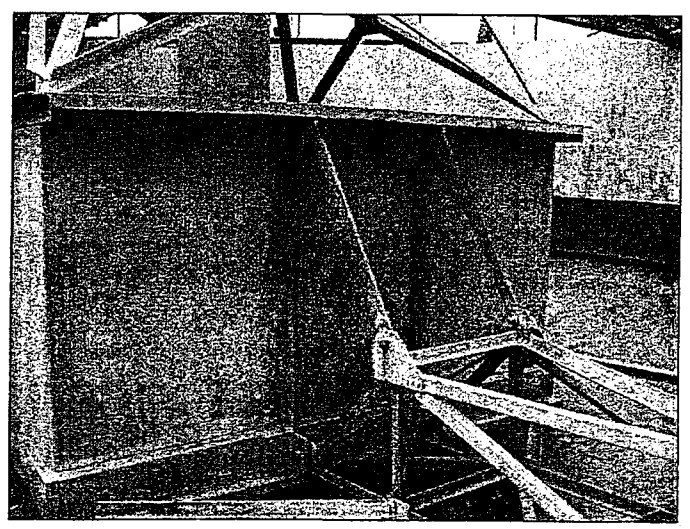

CENTER COLUMN

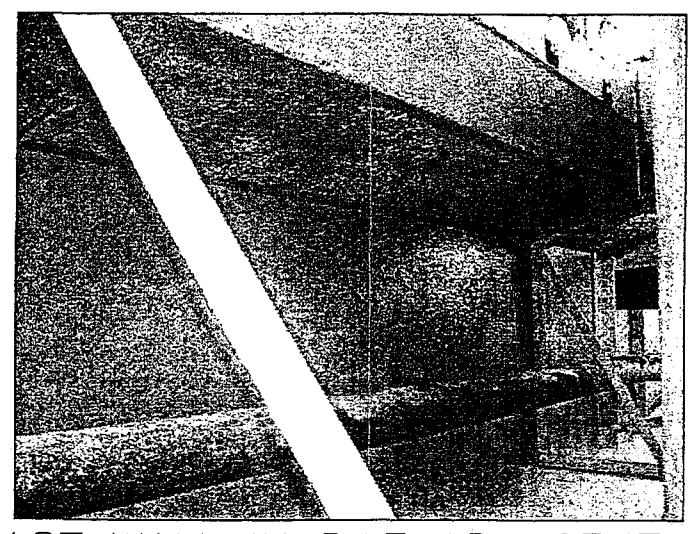

EAST WALL IN DAF ADJACENT TO FLOCLULATION TANK

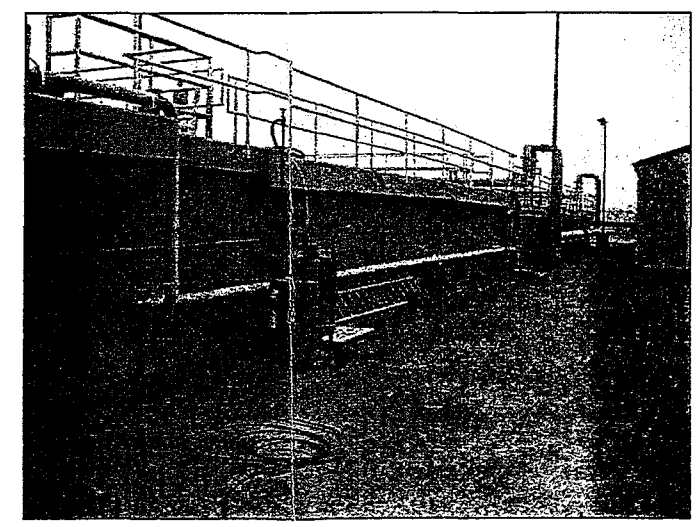

EXTERIOR OF DAF NORTH WALL

COPYRIGHT 2009 BY PROVOST & PRITCHARD
ALL RIGHTS RESERVED
The firm of Provost & Pritchard Engineering Group, Inc. expressly reserves its common law copyright and other property rights in these plans. These plans are not to be reproduced, changed, or copied in any form or manner whatsoever, nor are they to be assigned to any third party, without first obtaining the express written permission and consent of Provost & Pritchard Engineering Group, Inc. In the event of unauthorized reuse of these plans by a third party, the third party shall hold the firm of Provost & Pritchard Engineering Group, Inc. harmless for any liability caused by the unauthorized reuse of these plans, and further, the third party shall indemnify the firm of Provost & Pritchard Engineering Group, Inc. for any liability caused by the unauthorized reuse of these plans, including but not limited to all costs associated with defending any proceeding based upon such reuse.

RECORD DOCUMENT
DATE: 1-26-2011
THESE RECORD DOCUMENTS HAVE BEEN PREPARED IN PART ON THE BASIS OF INFORMATION COMPILED AND FURNISHED BY OTHERS. THE ENGINEER WILL NOT BE RESPONSIBLE FOR ANY ERRORS OR OMMISSIONS WHICH HAVE BEEN INCORPORATED INTO THIS DOCUMENT AS A RESULT.

No.	REVISION	BY	DATE

REGISTERED PROFESSIONAL ENGINEER
MICHAEL T. G. TAYLOR
No. 39961
Exp. 12/31/10
STATE OF CALIFORNIA
DATE SIGNED: _____

MALAGA WWTP
MALAGA COUNTY WATER DISTRICT
FRESNO COUNTY
MALAGA COUNTY WATER DISTRICT
PHOTOGRAPHS

EST. 1968
PROVOST & PRITCHARD
ENGINEERING GROUP
An Employee Owned Company
286 WEST CESAR CHAVEZ AVENUE
FRESNO, CALIFORNIA 93711-6152
559/449-2700 FAX 559/449-2715
www.provostpritchard.com

DESIGN ENGINEER: MGT
LICENSE NO: CE 39,961
DRAFTED BY: SML
CHECKED BY: MGT
SCALE: AS SHOWN
DATE: 12/02/08
JOB NO: 10570801
DWG. NO:
SHEET
DT5 OF 5

1/26/2011 12:03 PM G:\Clients\Maloco CWD - 1057\10570801-DAF Leak Repair\DWG\SHEETS\10570801-DT-DAF Repair Photos 05.dwg -Doug MacNeill

APPENDIX D

Record Drawings for improvements to the Sludge Drying Bed and Instrumentation

811
Know what's below.
Call before you dig.

MALAGA COUNTY WATER DISTRICT

FRESNO COUNTY

MALAGA WWTP
MONITORING AND SLUDGE BED IMPROVEMENTS
CDBG NO. 09451

RECORD DOCUMENT
DATE 4-14-2011
THESE RECORD DOCUMENTS HAVE BEEN PREPARED IN PART, ON THE BASIS OF INFORMATION COMPILED AND FURNISHED BY OTHERS. THE ENGINEER WILL NOT BE RESPONSIBLE FOR ANY ERRORS OR OMISSIONS WHICH HAVE BEEN INCORPORATED INTO THIS DOCUMENT AS A RESULT.

811
Know what's below.
Call before you dig.

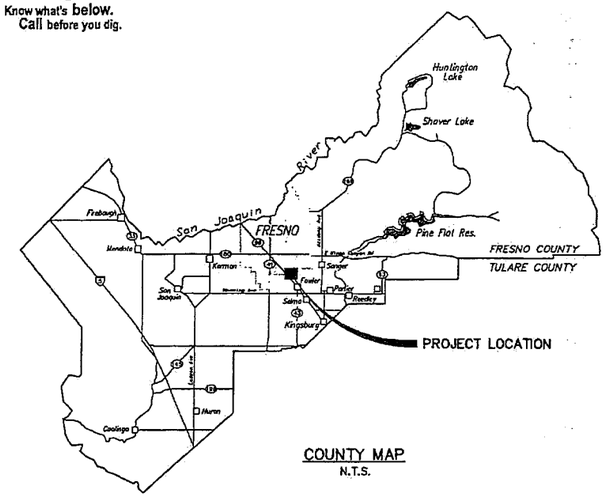

COUNTY MAP
N.T.S.

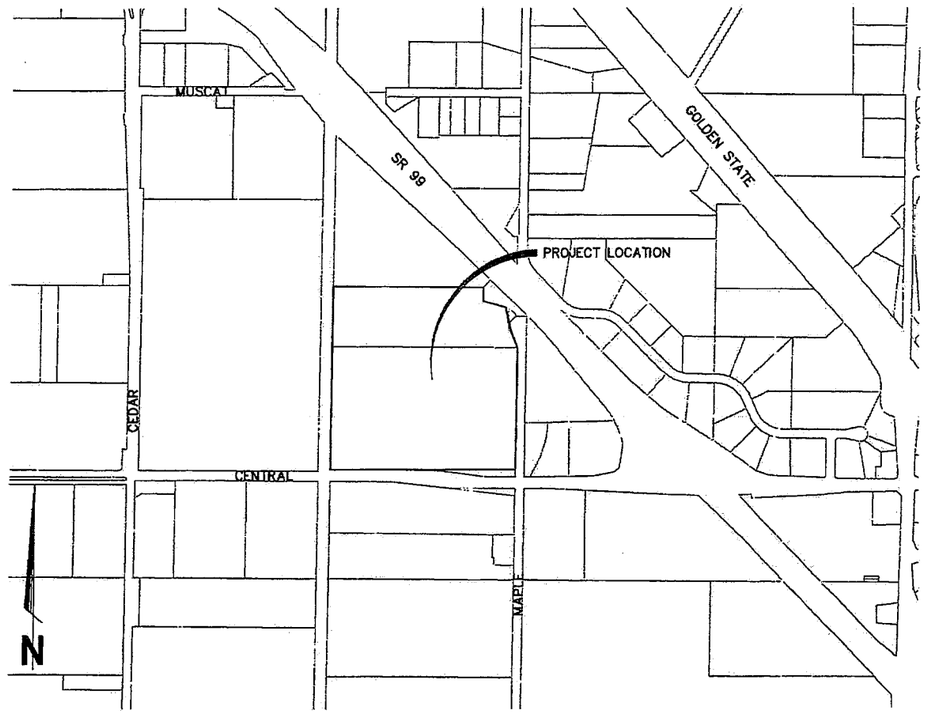

VICINITY MAP
1"=500'

CONSULTING ENGINEERS AND LAND SURVEYORS OF CALIFORNIA

CONSTRUCTION CONTRACTOR AGREES THAT IN ACCORDANCE WITH GENERALLY ACCEPTED CONSTRUCTION PRACTICES, CONSTRUCTION CONTRACTOR WILL BE REQUIRED TO ASSUME SOLE AND COMPLETE RESPONSIBILITY FOR JOB SITE CONDITIONS DURING THE COURSE OF CONSTRUCTION OF THE PROJECT, INCLUDING SAFETY OF ALL PERSONS AND PROPERTY, THAT THIS REQUIREMENT SHALL BE MADE TO APPLY CONTINUOUSLY AND NOT BE LIMITED TO NORMAL WORKING HOURS, AND CONSTRUCTION CONTRACTOR FURTHER AGREES TO DEFEND, INDEMNIFY AND HOLD DESIGN PROFESSIONAL HARMLESS FROM ANY AND ALL LIABILITY, REAL AND ALLEGED, IN CONNECTION WITH THE PERFORMANCE OF WORK ON THIS PROJECT, EXCEPTING LIABILITY ARISING FROM THE SOLE NEGLIGENCE OF DESIGN PROFESSIONAL.

SPECIAL NOTE

WHERE UNDERGROUND AND SURFACE STRUCTURES ARE SHOWN ON THE PLANS, THE LOCATIONS, DEPTH AND DIMENSIONS OF STRUCTURES ARE BELIEVED TO BE REASONABLY CORRECT, BUT ARE NOT GUARANTEED. SUCH STRUCTURES ARE SHOWN FOR THE INFORMATION OF THE CONTRACTOR, BUT INFORMATION SO GIVEN IS NOT TO BE CONSTRUED AS A REPRESENTATION THAT SUCH STRUCTURES WILL, IN ALL CASES, BE FOUND WHERE SHOWN, OR THAT THEY REPRESENT ALL OF THE STRUCTURES WHICH MAY BE ENCOUNTERED.

SITE SAFETY AND PROTECTION NOTES

THE DUTY OF THE ENGINEER, OWNER OR ITS AGENTS TO CONDUCT CONSTRUCTION REVIEW OF THE CONTRACTOR'S PERFORMANCE AND THE UNDERTAKING OF INSPECTIONS OR THE GIVING OF INSTRUCTIONS AS AUTHORIZED HEREIN IS NOT INTENDED TO INCLUDE REVIEW OF THE ADEQUACY OF THE CONTRACTOR'S SAFETY MEASURES IN, ON, OR NEAR THE CONSTRUCTION SITE AND SHALL NOT BE CONSTRUED AS SUPERVISION OF THE ACTUAL CONSTRUCTION NOR MAKE THE ENGINEER, OWNER OR ITS AGENTS RESPONSIBLE FOR PROVIDING A SAFE PLACE FOR THE PERFORMANCE OF WORK BY THE CONTRACTOR, SUBCONTRACTORS, OR SUPPLIERS, OR FOR ACCESS, VISITS, USE, WORK, TRAVEL OR OCCUPANCY BY ANY PERSON.

THE CONTRACTOR SHALL HAVE AT THE WORK SITE, COPIES OR SUITABLE EXTRACTS OF CONSTRUCTION SAFETY ORDERS, ISSUED BY CAL-OSHA. HE SHALL COMPLY WITH PROVISIONS OF THESE AND ALL OTHER APPLICABLE LAWS, ORDINANCES AND REGULATIONS. THE CONTRACTOR MUST COMPLY WITH PROVISIONS OF THE SAFETY AND HEALTH REGULATIONS FOR CONSTRUCTION, PROMULGATED BY THE SECRETARY OF LABOR UNDER SECTION 107 OF THE CONTRACT WORK HOURS AND SAFETY STANDARDS ACT, AS SET FORTH IN TITLE 29 C.F.R.

TO PROTECT THE LIVES AND HEALTH OF HIS EMPLOYEES UNDER THE CONTRACT, THE CONTRACTOR SHALL COMPLY WITH ALL PERTINENT PROVISIONS OF THE "MANUAL OF ACCIDENT PREVENTION IN CONSTRUCTION" ISSUED BY THE ASSOCIATED GENERAL CONTRACTORS OF AMERICA, INC., AND SHALL MAINTAIN AN ACCURATE RECORD OF ALL CASES OF DEATH, OCCUPATIONAL DISEASE, AND INJURY REQUIRING MEDICAL ATTENTION OR CAUSING LOSS OF TIME FROM WORK, ARISING OUT OF AND IN THE COURSE OF EMPLOYMENT OR WORK UNDER THE CONTRACT.

THE CONTRACTOR ALONE SHALL BE RESPONSIBLE FOR THE SAFETY, EFFICIENCY, AND ADEQUACY OF HIS FACILITIES, APPLIANCES, AND METHODS AND FOR ANY DAMAGE, WHICH MAY RESULT FROM THEIR FAILURE OR THEIR IMPROPER CONSTRUCTION, MAINTENANCE OR OPERATION.

THE CONTRACTOR AGREES THAT IT SHALL ASSUME SOLE AND COMPLETE RESPONSIBILITY FOR JOB SITE CONDITIONS DURING THE COURSE OF CONSTRUCTION OF THIS PROJECT, INCLUDING SAFETY OF ALL PERSONS AND PROPERTY; THAT THIS REQUIREMENT SHALL APPLY CONTINUOUSLY AND NOT BE LIMITED TO NORMAL WORKING HOURS; AND THAT THE CONTRACTOR SHALL DEFEND, INDEMNIFY AND HOLD THE OWNER, PROVOST & PRITCHARD ENGINEERING GROUP, INC., AND THEIR RESPECTIVE AGENTS HARMLESS FROM ANY AND ALL LIABILITY, REAL OR ALLEGED, IN CONNECTION WITH THE PERFORMANCE OF WORK ON THIS PROJECT, EXCEPTING FOR LIABILITY ARISING FROM THE SOLE NEGLIGENCE OF OWNER, ENGINEER, OR THEIR RESPECTIVE AGENTS.

THE OWNER AND ITS AGENTS' SITE RESPONSIBILITIES ARE LIMITED SOLELY TO THE ACTIVITIES OF THEIR EMPLOYEES ON SITE. THESE RESPONSIBILITIES SHALL NOT BE INFERRED BY ANY PARTY TO MEAN THAT THE OWNER OR ITS AGENTS HAVE RESPONSIBILITY FOR SITE SAFETY. SAFETY IN, ON, OR ABOUT THE SITE IS THE SOLE AND EXCLUSIVE RESPONSIBILITY OF THE CONTRACTOR ALONE. THE CONTRACTOR'S METHODS OF WORK PERFORMANCE, SUPERINTENDENCE AND THE CONTRACTOR'S EMPLOYEES, AND SEQUENCING OF CONSTRUCTION ARE ALSO THE SOLE AND EXCLUSIVE RESPONSIBILITIES OF THE CONTRACTOR ALONE.

SHEET INDEX

SHEET NO.	DESCRIPTION
1	COVER SHEET
2	PROCESS AND INSTRUMENTATION
3	WWTP PIPING PLAN
4	AERATION TANK MONITORING
5	AERATION TANK SECTION
6	SLUDGE MONITORING
7	SLUDGE MONITORING DETAILS
8	SLUDGE BED PLAN
9	SLUDGE BED DETAILS
10	ELECTRICAL
11	ELECTRICAL

APPROVALS

MALAGA COUNTY WATER DISTRICT DATE

GENERAL LEGEND

NOTE: ALL LEGEND ITEMS NOT IDENTIFIED AS PROPOSED FACILITIES INDICATE EXISTING FACILITIES

BFP	BACK FLOW PREVENTER
BO	BOLLARD
CIP	CAST-IN-PLACE CONCRETE PIPE
CNS	COMPACTED NATIVE SOIL
CO	SEWER CLEAN OUT
DI	STORM DRAIN INLET
DO	DISSOLVED OXYGEN
DS	DIGESTED SLUDGE
DW	DRIVEWAY
EC	ELECTROCONDUCTIVITY
EM	ELECTRIC METER
EPB	ELECTRIC PULL BOX
FL	FLOW LINE
FM	FLOWMETER
HP	HINGE POINT
INF	INFLUENT
MCC	MOTOR CONTROL CENTER
MCWD	MALAGA COUNTY WATER DISTRICT
MH	MANHOLE
MJ	MECHANICAL JOINT
NIC	NOT IN CONTRACT
OH	OVERHEAD
PB	PULL BOX
PL	PROPERTY LINE
PP	POWER POLE
RAS	RETURN ACTIVATED SLUDGE
SDB	SLUDGE DRYING BED
SE	SECONDARY EFFLUENT
SFM	SLUDGE FLOW METER
SLP	SLUDGE PUMP
SND	SUPERNATANT RETURN
STP	STAND PIPE
T	TEMPORARY SURVEY CONTROL
TBM	TEMPORARY BENCHMARK
TS	TOP OF STRUCTURE
TSB	TELEPHONE SPLICE BOX
UE	UNDERGROUND ELECTRIC
UG	UNDERGROUND
WAS	WASTE ACTIVATED SLUDGE
WM	WATER METER
WS	WATER SERVICE
WV	WATER VALVE
	SIGN
	SEWER MANHOLE
	WATER METER
	MONUMENT (SURFACE)
	EMBANKMENT
	FLOW DIRECTION
	EXISTING PAVEMENT
	ELECTRIC LINE (AERIAL)
	GAS LINE, SIZE AS NOTED
	STORM DRAIN LINE, SIZE AS NOTED
	SANITARY SEWER LINE, SIZE AS NOTED
	TELEPHONE LINE (UNDERGROUND)
	TELEPHONE LINE (AERIAL)
	WATER LINE, SIZE AS NOTED
	CHAIN LINK FENCE
	EDGE OF A.C. PAVEMENT

GENERAL NOTES

1. MALAGA COUNTY WATER DISTRICT (559-485-7353) SHALL BE CONTACTED AT LEAST 48 HOURS PRIOR TO COMMENCEMENT OF WORK ON OR NEAR EXISTING DISTRICT FACILITIES.
2. USED MATERIAL, REJECTS, MISFITS, OR SECONDS, ETC. ARE NOT ACCEPTABLE FOR USE ON MALAGA COUNTY WATER DISTRICT FACILITIES.
3. ALL CONSTRUCTION SHALL BE IN CONFORMANCE WITH THESE PLANS, PROJECT SPECIFICATIONS AND MALAGA COUNTY WATER DISTRICT SPECIFICATIONS.
4. CONTRACTOR SHALL FIELD VERIFY THE HORIZONTAL AND VERTICAL LOCATIONS OF ALL EXISTING FACILITIES PRIOR TO COMMENCING WORK. CALL UNDERGROUND SERVICE ALERT (USA) AT 1-800-227-2600. CONTRACTOR SHALL MAKE ENGINEER AWARE OF ANY DISCREPANCIES.
5. CONCRETE DESIGN MIX SHALL BE SUBMITTED TO THE ENGINEER FOR REVIEW AND APPROVAL. ALL CONCRETE SHALL HAVE A 28-DAY MINIMUM COMPRESSIVE STRENGTH OF 3000 PSI UNLESS OTHERWISE SPECIFIED.
6. ALL STEEL PIPE AND FITTINGS SHALL BE FURNISHED WITH A SHOP APPLIED HIGH SOLIDS EPOXY COATING ON THE INTERIOR AND EXTERIOR, UNLESS OTHERWISE INDICATED. ALL OTHER EXPOSED STEEL SHALL BE PAINTED WITH A PRE-TREATMENT PRIMER, AN UNDERCOAT AND A FINAL COAT OF PAINT IN ACCORDANCE WITH MALAGA COUNTY WATER DISTRICT SPECIFICATIONS.
7. ALL NUTS, BOLTS, AND WASHERS USED TO SECURE UNDERGROUND FITTINGS SHALL BE STAINLESS STEEL. AFTER INSTALLATION, ALL STEEL HARDWARE SHALL BE COATED WITH A RUST PREVENTATIVE, WRAPPED WITH 4 MIL POLYETHYLENE SHEETING, AND SECURE WITH PVC TAPE.
8. ALL CONSTRUCTION SHALL BE PERFORMED IN ACCORDANCE WITH APPLICABLE HEALTH AND SAFETY LAWS OF THE STATE OF CALIFORNIA AND CAL/OSHA STANDARDS.
9. CONTRACTOR WILL BE RESPONSIBLE FOR THE REPAIR OF ALL PIPELINE CRACKS, WHICH DEVELOP DURING CONSTRUCTION OF IMPROVEMENTS AFFECTING EXISTING FACILITIES.
10. ALL EXCESS MATERIAL AND/OR DEBRIS SHALL BE REMOVED UPON COMPLETION OF INSTALLATION.
11. CONTRACTOR SHALL BE RESPONSIBLE FOR PROVIDING ADEQUATE DUST CONTROL AT ALL TIMES.

COPYRIGHT 2009 by PROVOST & PRITCHARD
The firm of Provost & Pritchard Engineering Group, Inc. expressly reserves its common law copyright and other property rights in these plans. These plans are not to be reproduced, changed, or copied in any form or manner whatsoever, nor are they to be assigned to a third party without first obtaining the written permission and consent of Provost & Pritchard Engineering Group, Inc. In the event of unauthorized reuse of these plans by a third party, the third party shall hold the firm of Provost & Pritchard harmless for any damages resulting therefrom. It will bear the cost of Provost & Pritchard Engineering Group, Inc. to defend its ownership and protecting and enforcing these rights.

No.	REVISION	BY	DATE

REGISTERED PROFESSIONAL ENGINEER No. 39961 STATE OF CALIFORNIA
DATE SIGNED: 7-2-10

MALAGA WWTP
MONITORING AND SLUDGE BED
MALAGA COUNTY WATER DISTRICT
FRESNO COUNTY

COVER SHEET

EST. 1968
PROVOST & PRITCHARD
CONSULTING GROUP
An Employee Owned Company
286 WEST CROMWELL AVENUE
FRESNO, CALIFORNIA 93711-6162
559/449-2700 FAX 559/449-2710
www.ppeng.com

DESIGN ENGINEER: MGT
LICENSE NO: 39,961
DRAFTED BY: DWM | CHECKED BY: MGT
SCALE: 1" = 15'
DATE: 09-01-2009
JOB NO: 10570904
DWG. NO:
SHEET 1 OF 11

7/2/2010 9:38 AM G:\Clients\Malaga CWD - 1057\10570904-Monitoring & Sludge Bed\DWG\SHEET\10570904-GN-COVER.dwg -Matt Hofer

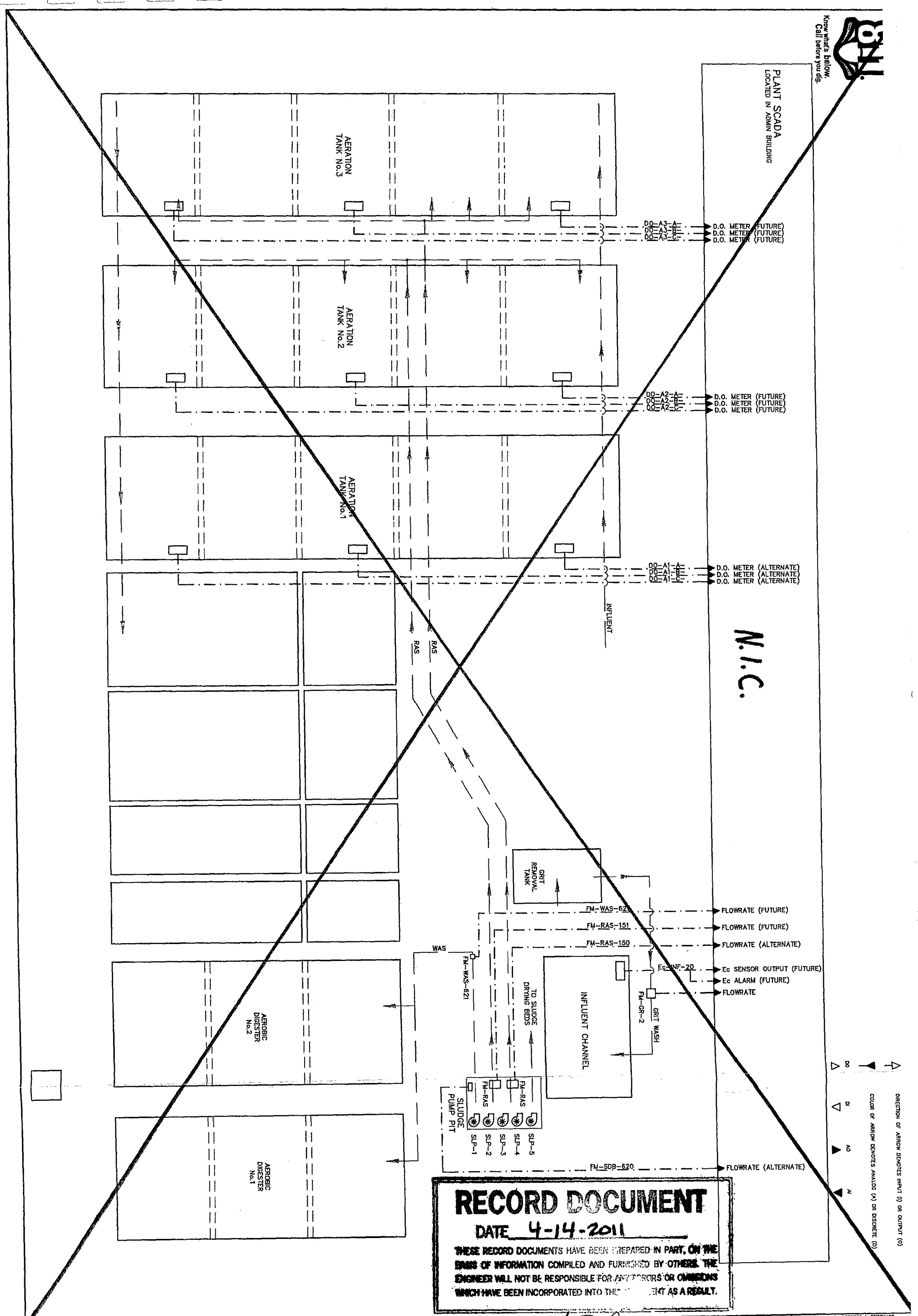

RECORD DOCUMENT

DATE 4-14-2011

THESE RECORD DOCUMENTS HAVE BEEN PREPARED IN PART, ON THE BASIS OF INFORMATION COMPILED AND FURNISHED BY OTHERS. THE ENGINEER WILL NOT BE RESPONSIBLE FOR ANY ERRORS OR OMISSIONS WHICH HAVE BEEN INCORPORATED INTO THE DOCUMENT AS A RESULT.

SHEET	2 OF 11
DWG. NO:	
JOB NO:	10570904
DATE:	06-01-2009
SCALE:	AS SHOWN
DRAFTED BY:	DWM
CHECKED BY:	MGT
LICENSE NO:	39,961
DESIGN ENGINEER:	MGT

EST. 1968
PROVOST & PRITCHARD
CONSULTING GROUP
An Employee Owned Company
285 WEST CROMWELL AVENUE
FRESNO, CALIFORNIA 93711-6162
559/449-2700 FAX 559/449-2715
www.ppeng.com

MALAGA WWTP
MONITORING AND SLUDGE BED
MALAGA COUNTY WATER DISTRICT
FRESNO COUNTY

PROCESS AND INSTRUMENTATION

REGISTERED PROFESSIONAL ENGINEER MICHAEL G. TAYLOR No. 39961 CIVIL STATE OF CALIFORNIA

DATE SIGNED: 7-2-10

No.	REVISION	BY	DATE

COPYRIGHT 2009 by PROVOST & PRITCHARD ENGINEERING GROUP, INC. ALL RIGHTS RESERVED
The firm of Provost & Pritchard Engineering Group, Inc. expressly reserves its common law copyright and other applicable property rights in these plans. These plans are not to be reproduced, changed, or copied in any form or manner whatsoever, nor are they to be assigned to a third party without first obtaining the written permission and consent of Provost & Pritchard Engineering Group, Inc. In the event of unauthorized reuse of these plans by a third party, the third party shall hold the firm of Provost & Pritchard Engineering Group, Inc. harmless, and shall bear the cost of Provost & Pritchard Engineering Group, Inc.'s legal fees associated with defending and enforcing these rights.

7/2/2010 9:38 AM G:\Clients\Malaga CWD - 1057\10570904-Monitoring & Sludge Bed\DWG\SHEET\10570904-DIA-PROCESS AND INST.dwg -Matt Hofer

RECORD DOCUMENT
DATE 4-14-2011
THESE RECORD DOCUMENTS WERE PREPARED IN PART, ON THE BASIS OF INFORMATION COMPILED AND FURNISHED BY OTHERS. THE ENGINEER WILL NOT BE RESPONSIBLE FOR ANY ERRORS OR OMISSIONS WHICH HAVE BEEN INCORPORATED INTO THIS DOCUMENT AS A RESULT.

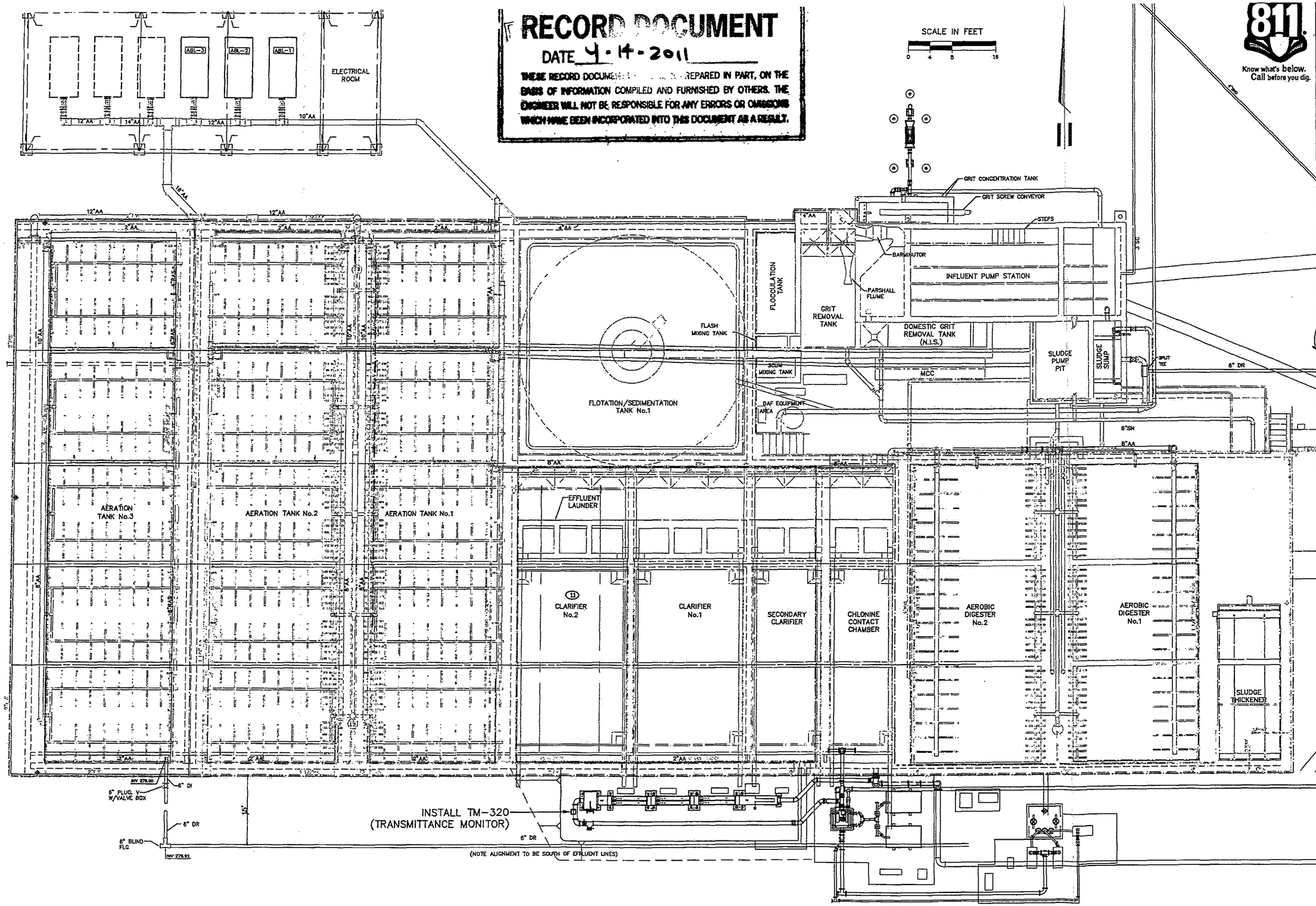

COPYRIGHT 2009 BY PROVOST & PRITCHARD
The firm of Provost & Pritchard Engineering Group, Inc. expressly reserves its common law copyright and other property rights in these plans. These plans are not to be reproduced, changed, or copied in any form or manner whatsoever, nor are they to be assigned to a third party without first obtaining the written permission and consent of Provost & Pritchard Engineering Group, Inc. In the event of unauthorized reuse of these plans by a third party, the third party agrees to hold Provost & Pritchard Engineering Group, Inc. harmless, and also agrees to indemnify Provost & Pritchard Engineering Group, Inc. for any and all costs and expenses associated with defending and enforcing these rights.

No.	REVISION	BY	DATE

DATE SIGNED: 7-2-10

MALAGA WWTP
MONITORING AND SLUDGE BED
MALAGA COUNTY WATER DISTRICT
FRESNO COUNTY

WWTP PIPING PLAN

EST 1956
PROVOST & PRITCHARD
CONSULTING GROUP
An Employee Owned Company
286 WEST CROMWELL AVENUE
FRESNO, CALIFORNIA 93711-6162
559/449-2700 FAX 559/449-2715
www.provpritch.com

DESIGN ENGINEER: MGT
LICENSE NO: 39,961
DRAFTED BY: DWM
CHECKED BY: MGT
SCALE: AS SHOWN
DATE: 09-01-2009
JOB NO: 10570904
DWG. NO:
SHEET 3 OF 11

7/7/2010 9:38 AM G:\Clients\Valley CWD - 1057\10570904-Monitoring & Sludge Bed\SHEET SETS\10570904-PL-PIPING PLAN.dwg -Matt Hofer

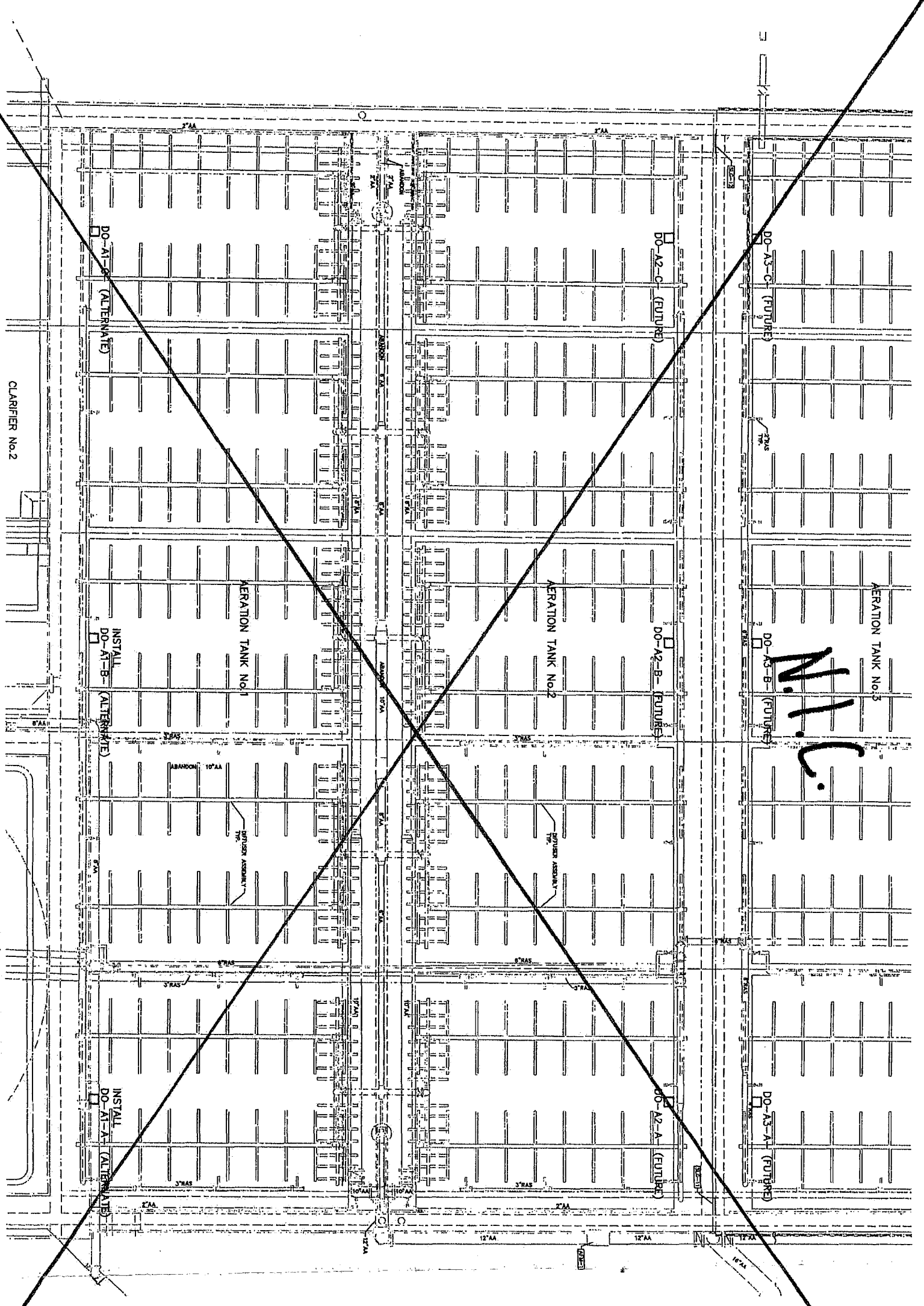

SCALE IN FEET
0 2.5 5 10

PLAN

Know what's below. Call before you dig.

RECORD DOCUMENT
DATE 4-14-2011
THESE RECORD DOCUMENTS HAVE BEEN PREPARED IN PART, ON THE BASIS OF INFORMATION COMPILED AND FURNISHED BY OTHERS. THE ENGINEER WILL NOT BE RESPONSIBLE FOR ANY ERRORS OR OMISSIONS WHICH HAVE BEEN INCORPORATED INTO THIS DOCUMENT AS A RESULT.

EST. 1968
PROVOST & PRITCHARD
CONSULTING GROUP
An Employee Owned Company
286 WEST CROMWELL AVENUE
FRESNO, CALIFORNIA 93711-6162
559/449-2700 FAX 559/449-2715
www.ppeng.com

MALAGA WWTP
MONITORING AND SLUDGE BED
MALAGA COUNTY WATER DISTRICT
FRESNO COUNTY

AERATION TANK MONITORING

REGISTERED PROFESSIONAL ENGINEER MICHAEL G. TAYLOR No. 39961 CIVIL STATE OF CALIFORNIA
DATE SIGNED: 7-2-10

No.	REVISION	BY	DATE

COPYRIGHT 2009 by PROVOST & PRITCHARD ENGINEERING GROUP, INC. ALL RIGHTS RESERVED
The firm of Provost & Pritchard Engineering Group, Inc. expressly reserves its common law copyright and other applicable property rights in these plans. These plans are not to be reproduced, changed, or copied in any form or manner whatsoever, nor are they to be assigned to a third party without first obtaining the written permission and consent of Provost & Pritchard Engineering Group, Inc. In the event of unauthorized reuse of these plans by a third party, the third party shall hold the firm of Provost & Pritchard Engineering Group, Inc. harmless, and shall bear the cost of Provost & Pritchard Engineering Group, Inc.'s legal fees associated with defending and enforcing these rights.

SHEET	4 OF 11
DWG. NO:	
JOB NO:	10570904
DATE:	09-01-2009
SCALE:	AS SHOWN
DRAFTED BY: DWM	CHECKED BY: MGT
LICENSE NO:	39,961
DESIGN ENGINEER:	MGT

7/2/2010 9:38 AM G:\Clients\Malaga CWD - 1057\10570904-Monitoring & Sludge Bed\SHEET SETS\10570904-PL-AERATION TANK MONITORING.dwg -Matt Hofer

Know what's below.
Call before you dig.

N.I.C.

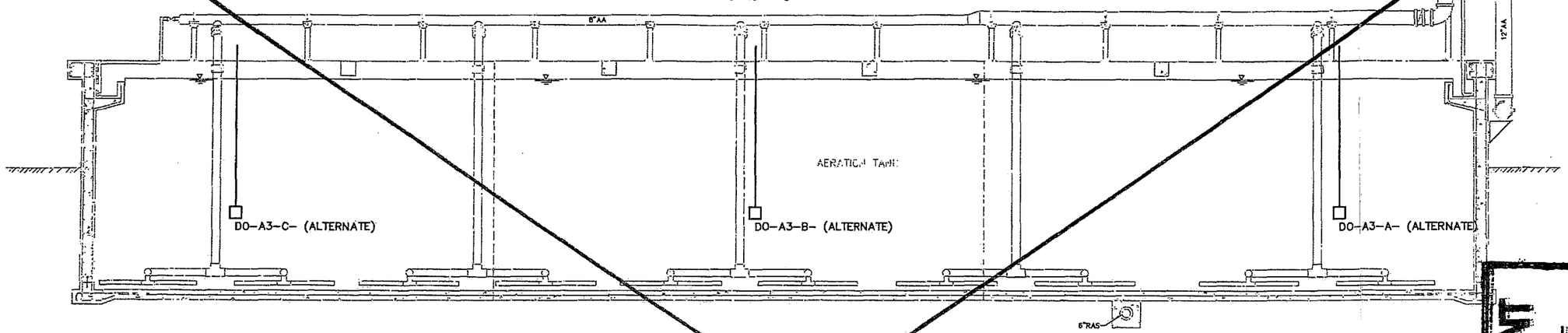

1/5 SECTION
1/4"=1'-0"

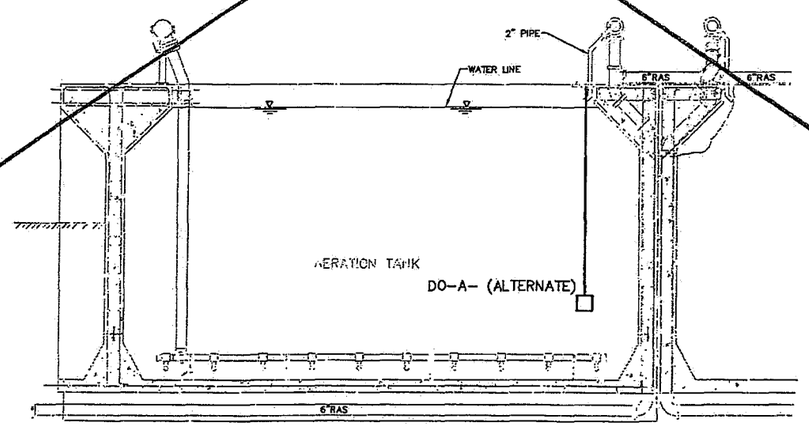

2/5 SECTION
1/4"=1'-0"

NOTE: D.O. SENSORS TO BE INSTALLED WITH A RAIL MOUNT INSTALLATION. THE MOUNTING FACILITIES SHALL BE FURNISHED AND INSTALLED BY THE CONTRACTOR. ABOVE WATER IMPROVEMENTS SHALL BE UV RESISTANT (STAINLESS STEEL OR APPROVED EQUIVALENT). ALL SENSORS SHALL ALLOW RETRIEVAL BY THE OPERATOR.

CONTRACTOR SHALL DESIGN INSTRUMENT MOUNTS TO ATTACH TO EXISTING RAILING AND ROUTE THROUGH EXISTING FACILITIES ALREADY IN PLACE. CONTRACTOR SHALL PRESERVE AND PROTECT ALL EXISTING PIPING AND APPURTANCE IN PLACE.

RECORD DOCUMENT
DATE 4-14-2011
THESE RECORD DOCUMENTS HAVE BEEN PREPARED IN PART, ON THE BASIS OF INFORMATION COMPILED AND FURNISHED BY OTHERS. THE ENGINEER WILL NOT BE RESPONSIBLE FOR ANY ERRORS OR OMISSIONS WHICH HAVE BEEN INCORPORATED INTO THIS DOCUMENT AS A RESULT.

COPYRIGHT 2009 by PROVOST & PRITCHARD ENGINEERING GROUP, INC. ALL RIGHTS RESERVED.
The firm of Provost & Pritchard Engineering Group, Inc. expressly reserves its common law copyright and other applicable property rights in these plans. These plans are not to be reproduced, changed, or copied in any form or manner whatsoever, nor are they to be assigned to a third party without first obtaining the express written permission of Provost & Pritchard Engineering Group, Inc. In the event of unauthorized reuse of these plans by third parties, the third party agrees to hold Provost & Pritchard Engineering Group, Inc. harmless, and to indemnify Provost & Pritchard Engineering Group, Inc. for any and all liabilities, losses and costs Provost & Pritchard Engineering Group, Inc.'s legal fees associated with defending and enforcing these rights.

No.	REVISION	BY	DATE

DATE SIGNED: 7-2-10

MALAGA WWTP
MONITORING AND SLUDGE BED
MALAGA COUNTY WATER DISTRICT
FRESNO COUNTY

AERATION TANK SECTION

EST. 1968
PROVOST & PRITCHARD
CONSULTING GROUP
An Employee Owned Company
286 WEST CROWELL AVENUE
FRESNO, CALIFORNIA 93704-1512
559/449-2700 FAX 559/449-2715
www.ppeng.com

DESIGN ENGINEER: MGT	
LICENSE NO: 39,961	
DRAFTED BY: DWM	CHECKED BY: MGT
SCALE: AS SHOWN	
DATE: 09-01-2009	
JOB NO: 10570904	
DWG. NO:	
SHEET 5 OF 11	

7/2/2010 9:38 AM G:\Clients\Malaga CWD - 1057\10570904-Monitoring & Sludge Bed\SHEET SETS\10570904-07-AERATION TANK SECTION.dwg -Matt Hofer

RECORD DOCUMENT

DATE 4-14-2011

THESE RECORD DOCUMENTS WERE PREPARED IN PART, ON THE BASIS OF INFORMATION COMPILED AND FURNISHED BY OTHERS. THE ENGINEER WILL NOT BE RESPONSIBLE FOR ANY ERRORS OR OMISSIONS WHICH HAVE BEEN INCORPORATED INTO THIS DOCUMENT AS A RESULT.

N.I.C.

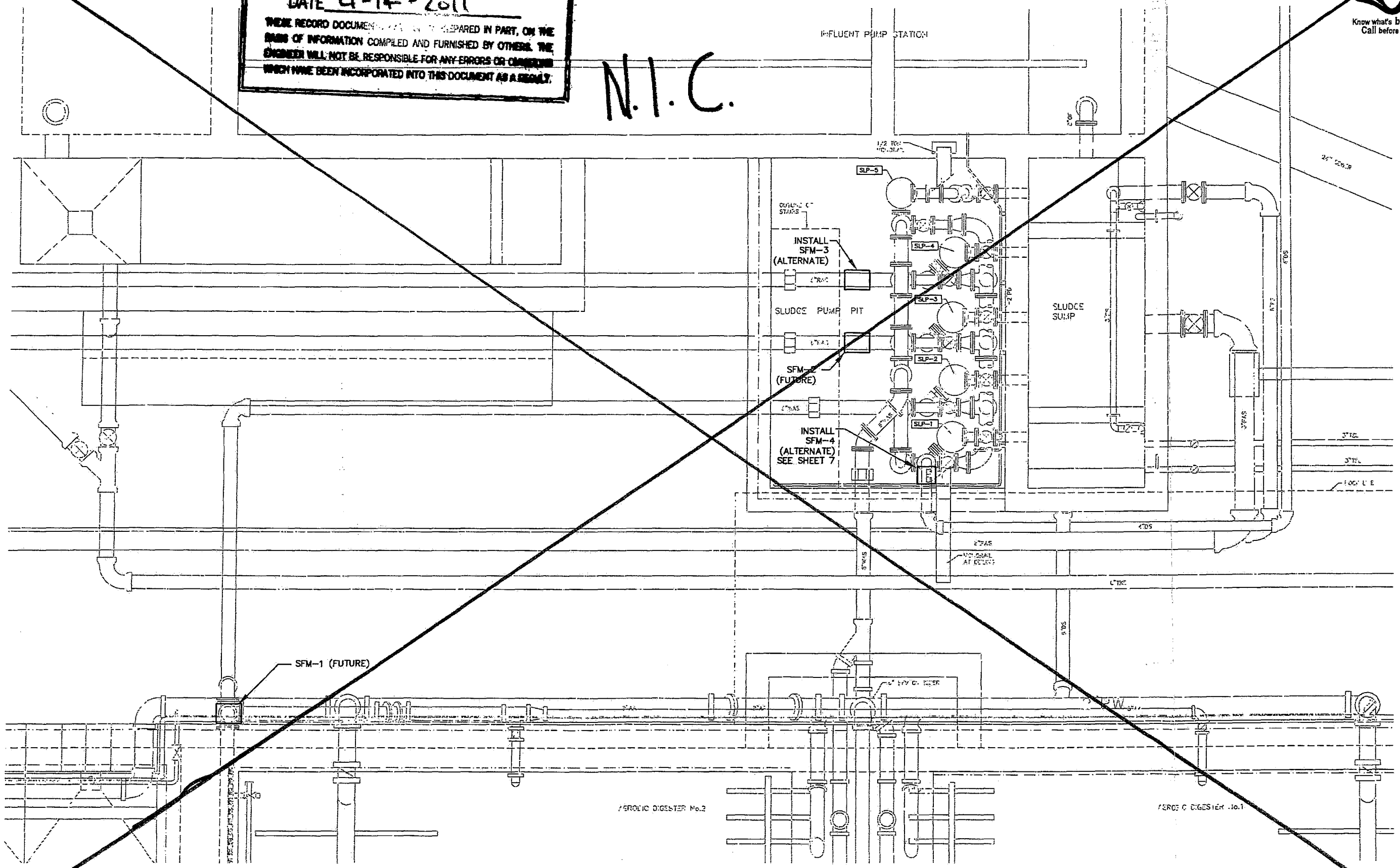

PLAN
1/2"=1'-0"

Know what's below. Call before you dig.

COPYRIGHT 2009 by PROVOST & PRITCHARD CONSULTING GROUP
These plans and specifications are the property of Provost & Pritchard Consulting Group, Inc. expressly reserves its common law copyright and other property rights in these plans and specifications. These plans are not to be reproduced, changed, or copied in any form or manner whatsoever, nor are they to be assigned to any third party, without first obtaining the written permission and consent of Provost & Pritchard Consulting Group, Inc. In the event of unauthorized reuse of these plans by a third party, the third party shall hold the firm of Provost & Pritchard Consulting Group, Inc. harmless and bear the cost of Provost & Pritchard Engineering and Consulting, Inc.'s legal fees associated with defending such claims. These rights

No.	REVISION	BY	DATE

DATE SIGNED: 7-2-10

MALAGA WWTP
MONITORING AND SLUDGE BED
MALAGA COUNTY WATER DISTRICT
FRESNO COUNTY

SLUDGE MONITORING

EST. 1969
PROVOST & PRITCHARD
CONSULTING GROUP
An Employee Owned Company
1630 W. BEAL AVENUE
FRESNO, CALIFORNIA 93711-6162
559/449-2700 FAX 559/449-2715
www.ppcg.com

DESIGN ENGINEER: MGT
LICENSE NO: 39,961
DRAFTED BY: DWM
CHECKED BY: MGT
SCALE: AS SHOWN
DATE: 09-01-2009
JOB NO: 10570904
DWG. NO:
SHEET 6 OF 11

7/2/2010 9:38 AM G:\Clients\Malaga CWD - 1057\10570904-Monitoring & Sludge Bed\SHEET SETS\10570904-DT-SLUDGE MONITORING.dwg -Matt Hafer

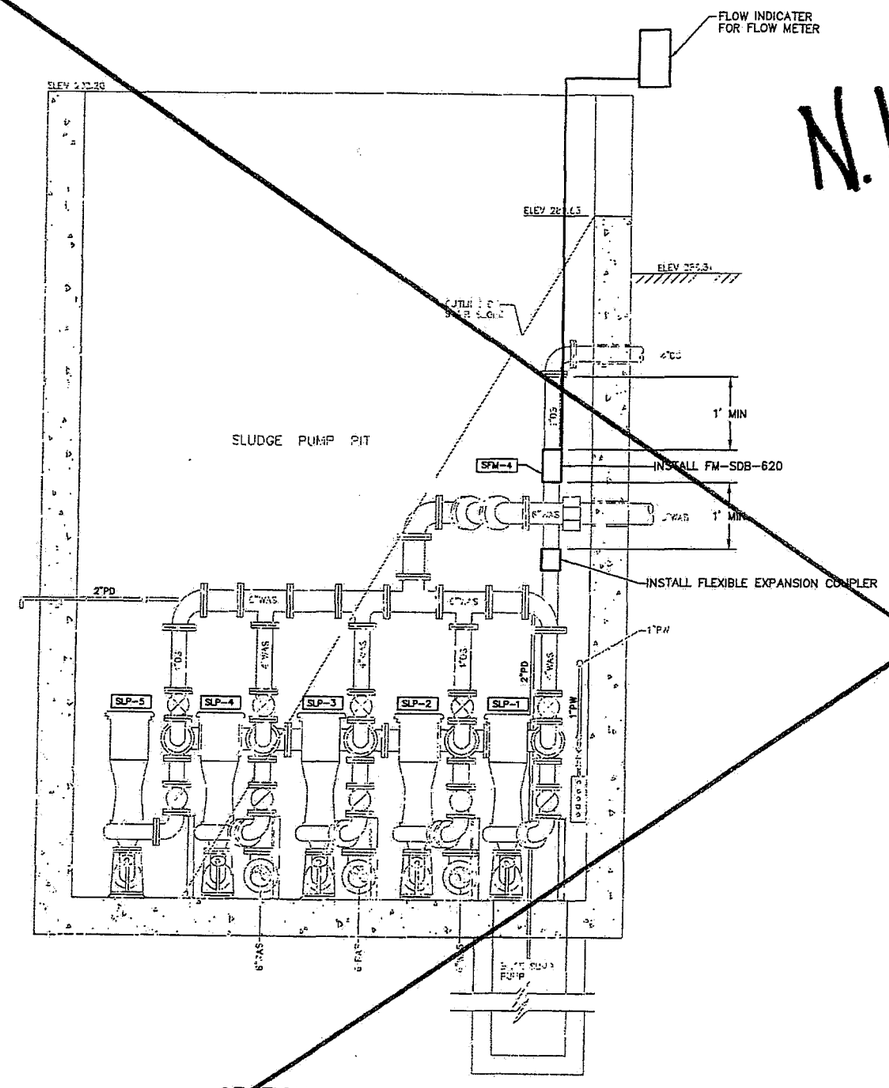

SECTION
1/2"=1'-0"

N.I.C.

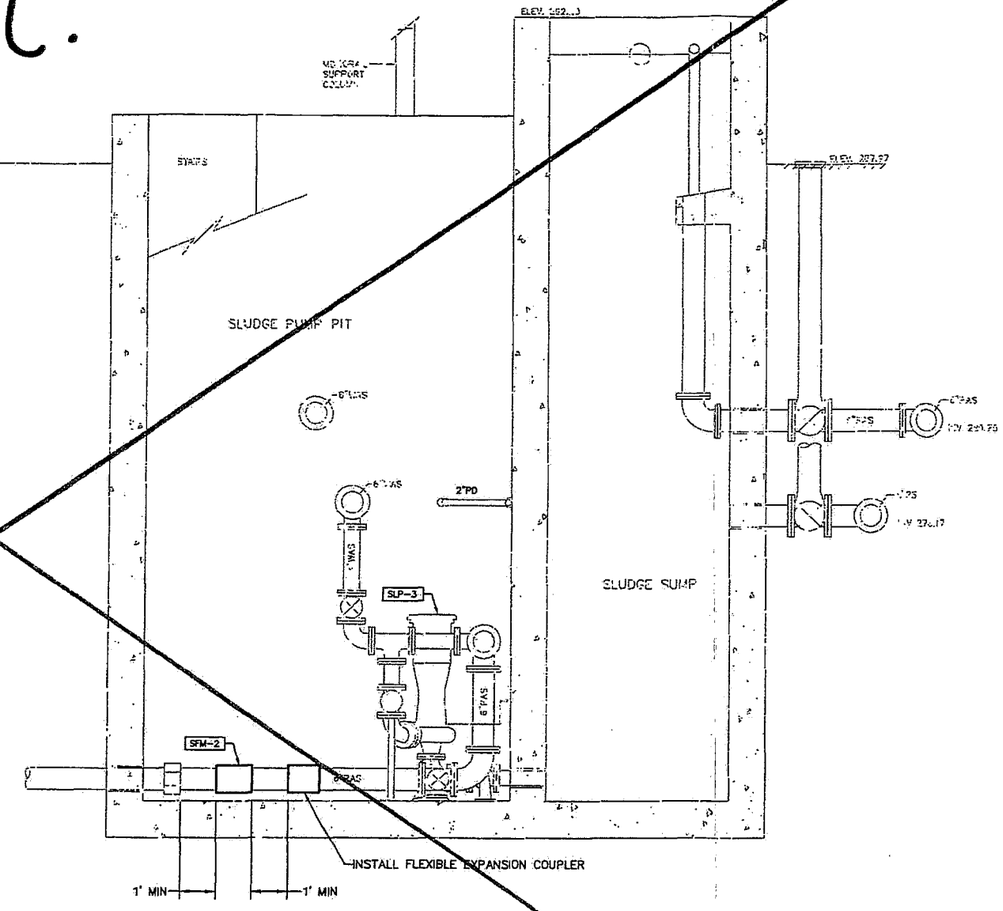

SECTION
1/2"=1'-0"

NOTE: FLOW INDICATOR FOR RAS FLOWMETER SHALL BE LOCATED ADJACENT TO THE FLOW INDICATOR FOR THE WAS FLOWMETER.

RECORD DOCUMENT

DATE 4-14-2011

THESE RECORD DOCUMENTS HAVE BEEN PREPARED IN PART, ON THE BASIS OF INFORMATION COMPILED AND FURNISHED BY OTHERS. THE ENGINEER WILL NOT BE RESPONSIBLE FOR ANY ERRORS OR OMISSIONS WHICH HAVE BEEN INCORPORATED INTO THIS DOCUMENT AS A RESULT.

811 Know what's below. Call before you dig.

COPYRIGHT 2009 by PROVOST & PRITCHARD CONSULTING GROUP, A Partnership of Corporations, Inc. expressly reserves its common law copyright and other property rights in these plans, specifications, plans and specifications. These documents are not to be loaned, copied or reproduced in any form or manner whatsoever, nor are they to be assigned to any third party without first obtaining the written permission and consent of Provost & Pritchard Consulting Group, Inc. In the event of unauthorized reuse of these documents by a third party, the third party shall hold the firm of Provost & Pritchard Consulting Group, Inc. harmless. It shall bear the cost of Provost & Pritchard Engineering Group, Inc.'s legal fees associated with defending such actions, if any.

No.	REVISION	BY	DATE

REGISTERED PROFESSIONAL ENGINEER No. 39961 Civil STATE OF CALIFORNIA

DATE SIGNED: 7-2-10

MALAGA WWTP
MONITORING AND SLUDGE BED
MALAGA COUNTY WATER DISTRICT
FRESNO COUNTY

SLUDGE MONITORING DETAILS

EST. 1966
PROVOST & PRITCHARD
CONSULTING GROUP
An Employee Owned Company
286 WEST CROMWELL AVENUE
FRESNO, CALIFORNIA 93711-6162
559/449-2700 FAX 559/449-2715
www.provpritch.com

DESIGN ENGINEER: MGT	
LICENSE NO: 39,961	
DRAFTED BY: DWM	CHECKED BY: MGT
SCALE: AS SHOWN	
DATE: 09-01-2009	
JOB NO: 10570904	
DWG. NO:	
SHEET 7 OF 11	

7/2/2010 9:38 AM C:\Users\Vdolge CND - 1057\10570904-Monitoring & Sludge Bed\SHEET SETS\10570904-DT-SLUDGE MONITORING DETAILS.dwg -Matt Hofer

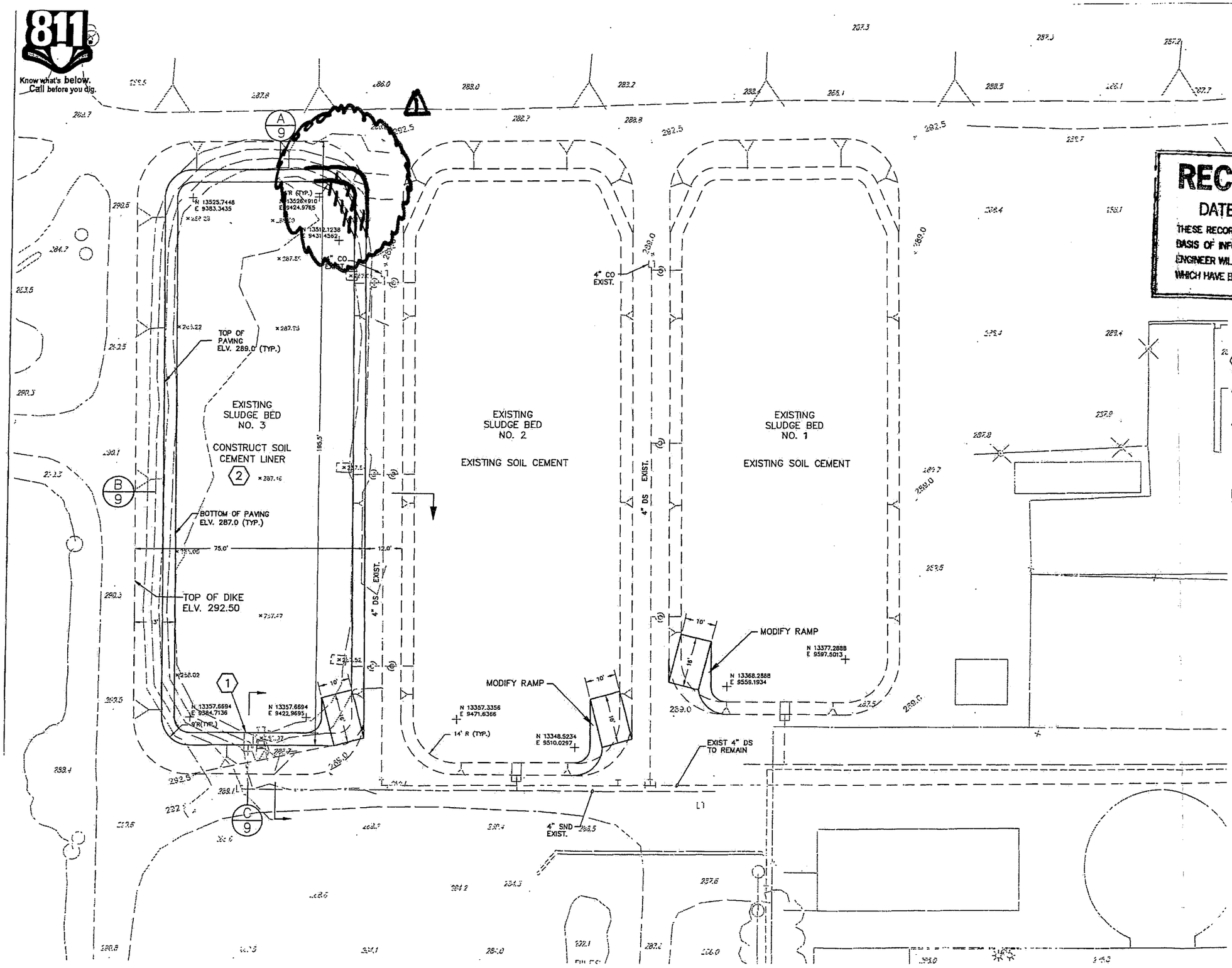

Know what's below. Call before you dig.

RECORD DOCUMENT

DATE 4-14-2011

THESE RECORD DOCUMENTS HAVE BEEN PREPARED IN PART, ON THE BASIS OF INFORMATION COMPILED AND FURNISHED BY OTHERS. THE ENGINEER WILL NOT BE RESPONSIBLE FOR ANY ERRORS OR OMISSIONS WHICH HAVE BEEN INCORPORATED INTO THIS DOCUMENT AS A RESULT.

COPYRIGHT 2009 by PROVOST & PRITCHARD ENGINEERING GROUP, INC. ALL RIGHTS RESERVED
The firm of Provost & Pritchard Engineering Group, Inc. expressly reserves its common law copyright and other applicable property rights in these plans. These plans are not to be reused in whole or in part nor in any form or manner whatsoever, nor are they to be assigned to any third party without first obtaining the written permission and consent of Provost & Pritchard Engineering Group, Inc. In the event of unauthorized reuse of these plans by a third party, the third party shall hold the firm of Provost & Pritchard Engineering Group, Inc. harmless and shall bear the cost of Provost & Pritchard Engineering Group, Inc.'s legal fees associated with defending and enforcing these rights.

NOTES:

1. EXISTING DECANT STRUCTURE TO REMAIN.
2. CONSTRUCT 12" SOIL CEMENT IN BOTTOM AND SIDE OF SLUDGE BEDS, SEE SHEET 9.

LEGEND

292.5 EXIST. ELEVATION

× 286.5 PROPOSED ELEVATION

△ CHANGE TO POND RETURN 4/13/11

No.	REVISION	BY	DATE

REGISTERED PROFESSIONAL ENGINEER — MATTHEW G. TOMPKINS — No. 39961 — STATE OF CALIFORNIA

DATE SIGNED: 7-2-10

MALAGA WWTP
MONITORING AND SLUDGE BED
MALAGA COUNTY WATER DISTRICT
FRESNO COUNTY

SLUDGE BED PLAN

EST. 1960 PROVOST & PRITCHARD CONSULTING GROUP
An Employee Owned Company
286 WEST CROMWELL AVENUE
FRESNO, CALIFORNIA 93711-6162
559/449-2700 FAX 559/449-2715
www.provpritch.com

DESIGN ENGINEER: MGT	
LICENSE NO: 39,961	
DRAFTED BY: DWM	CHECKED BY: MGT
SCALE: 1" = 15'	
DATE: 09-01-2009	
JOB NO: 10570904	
DWG. NO:	
SHEET 8 OF 11	

7/2/2010 9:38 AM G:\Clients\Malaga CWD - 1057\10570904-Monitoring & Sludge Bed\DWG\SHEET\10570904-SLUDGE BED PLAN.dwg -Matt Hofer

Know what's below. Call before you dig.

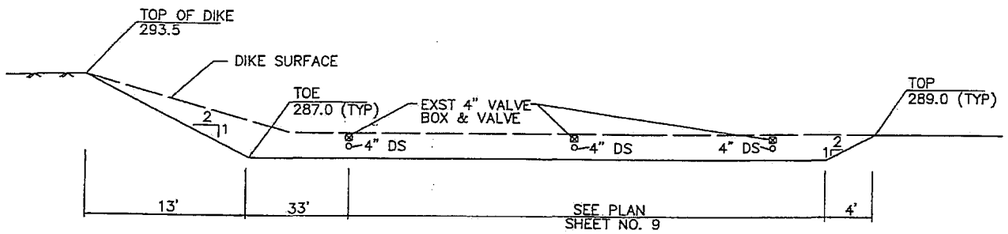

A SECTION
N.T.S.

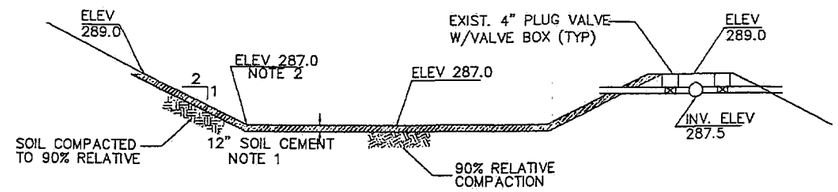

B SECTION
N.T.S.

NOTES:
1. LINE EXISTING SLUDGE DRYING BEDS WITH 12" SOIL CEMENT.
2. ELEVATIONS WITHIN DRYING BEDS ARE TOP OF SOIL CEMENT LINING—REMOVE SOIL AS NECESSARY. SPREAD REMOVED SOIL ON OPEN SPACE EAST OF THE DRYING BEDS.
3. THE DISTRICT WILL REMOVE EXISTING SLUDGE FROM DRYING BED. KEEP SLUDGE AND REMOVED SOIL SEPARATE.
4. COMPACTION REQUIREMENTS ARE TO EXTEND 2 FEET BELOW SOIL CEMENT BOTTOM.

SLUDGE BED

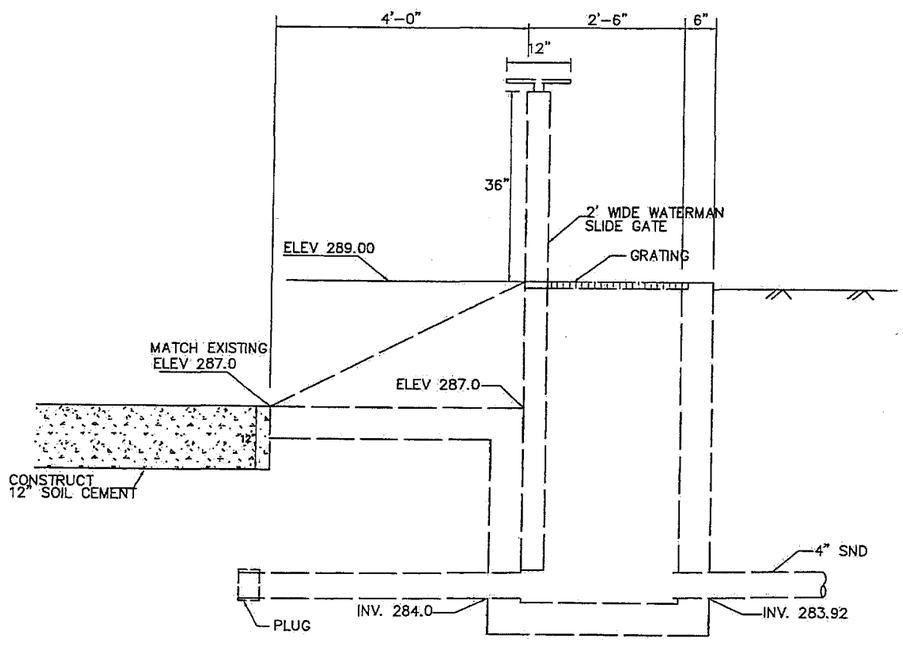

C SECTION
N.T.S.

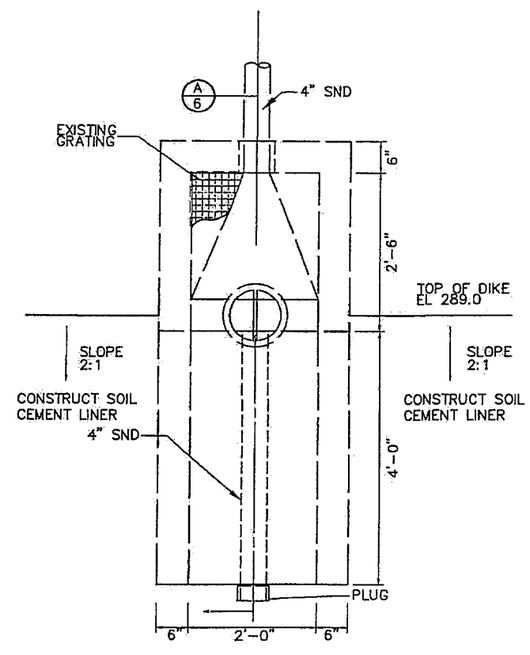

D PLAN
N.T.S.

EXISTING DECANT STRUCTURE

RECORD DOCUMENT
DATE 4-14-2011
THESE RECORD DOCUMENTS HAVE BEEN PREPARED IN PART, ON THE BASIS OF INFORMATION COMPILED AND FURNISHED BY OTHERS. THE ENGINEER WILL NOT BE RESPONSIBLE FOR ANY ERRORS OR OMISSIONS WHICH HAVE BEEN INCORPORATED INTO THIS DOCUMENT AS A RESULT.

COPYRIGHT 2009 by PROVOST & PRITCHARD
ENGINEERING GROUP, A PARTNERSHIP, LLP
The firm of Provost & Pritchard Engineering Group, Inc. expressly reserves its common law copyright and other property rights in these plans, specifications, and plan, are not to be reproduced, changed, or copied in any form or manner whatsoever, nor are they to be assigned to any third party without first obtaining the written permission and consent of Provost & Pritchard Engineering Group, Inc. In the event of unauthorized reuse of these plans by a third party, the third party shall hold the firm of Provost & Pritchard Engineering Group, Inc. harmless, and shall bear the cost of Provost & Pritchard Engineering Group, Inc. for any costs associated with defending and enforcing these rights.

No.	REVISION	BY	DATE

DATE SIGNED: 7-2-10

MALAGA WWTP
MONITORING AND SLUDGE BED
MALAGA COUNTY WATER DISTRICT
FRESNO COUNTY

SLUDGE BED DETAILS

EST. 1968
PROVOST & PRITCHARD
CONSULTING GROUP
An Employee Owned Company
286 WEST CROMWELL AVENUE
FRESNO, CALIFORNIA 93711-6162
559/449-2700 FAX 559/449-2715
www.provpritch.com

DESIGN ENGINEER: MGT
LICENSE NO: 39,961
DRAFTED BY: DWM
CHECKED BY: MGT
SCALE: 1" = 15'
DATE: 09-01-2009
JOB NO: 10570904
DWG. NO:
SHEET 9 OF 11

7/2/2010 9:39 AM G:\Clients\Malaga CWD - 1057\10570904-Monitoring & Sludge Bed\DWG\SHEET\10570904-DT-SLUDGE BED DETAILS.dwg -Matt Hofer

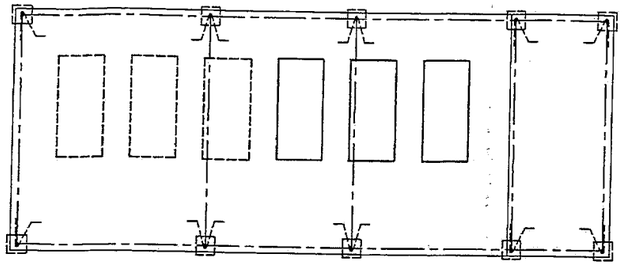

CONDUIT CONSTRUCTION MATERIAL NOTES:

THREADED METAL RIGID PVC COATED:
ALL METALLIC CONDUITS INSTALLED IN CONTACT WITH CONCRETE OR IN CONTACT WITH EARTH, SHALL BE COATED WITH A MINIMUM 40 MIL PVC COATING. FACTORY APPLIED ON ALL CONDUIT AND FITTINGS. COATING SHALL EXTEND TO FIRST DEVICE OR TERMINATION POINT OF CONDUIT.

FLEXIBLE LIQUID TIGHT METALLIC CONDUIT:
CONNECTIONS TO MACHINERY. CONDUIT SHALL BE FLEXIBLE INTERLOCKING SINGLE STRIP STEEL CONDUIT WITH LIQUID TIGHT EXTERIOR COVER, WITH ALL CONNECTIONS MADE WITH GALVANIZED STEEL LIQUID TIGHT WITH "O" RING GASKETS, AND WITH COPPER GROUND WIRE (MAXIMUM LENGTH 30"), AMERICAN BRASS SEALTIGHT OR EQUIVALENT, CONFORMING TO UL 1. NYLON INSULATED THROAT.

JUNCTION BOXES:
MINIMUM SIZE PER NEC. EXPOSED LOCATION, 1 AND 2 GANG TO BE CAST IRON DEVICE BOXES TYPE FS/FD SUITABLE FOR WET LOCATIONS. EXPOSED LOCATION EXTERIOR LARGER SIZES STEEL CONTINUOUS HINGE TYPE 4, CORROSIVE LOCATIONS CONTINUOUS HINGE TYPE 4X STAINLESS STEEL. ALL BOXES USED MUST BE SUBMITTED FOR APPROVAL.

GROUND CONNECTIONS:
GROUND CONNECTIONS TO BE EXOTHERMIC CADWELD OR BURNDY HYDRAULIC COMPRESSION CONNECTORS. GROUND BUS CONNECTIONS TO BE CRIMP LUG TYPE WITH BOLTED CONNECTION TO GROUND BUS.

PROVIDE MANUFACTURER CABLE OF ADEQUATE LENGTHS FROM FIELD INSTRUMENT SENSOR TO INSTRUMENT ELECTRONICS IN THE NEW INSTRUMENT PANEL.

CONTACT EPS TO SCHEDULE AN ELECTRICAL PRE-CONSTRUCTION MEETING PRIOR TO COMMENCING CONSTRUCTION

RECORD DOCUMENT
DATE 4-14-2011
THESE RECORD DOCUMENTS HAVE BEEN PREPARED IN PART, ON THE BASIS OF INFORMATION COMPILED AND FURNISHED BY OTHERS. THE ENGINEER WILL NOT BE RESPONSIBLE FOR ANY ERRORS OR OMISSIONS WHICH HAVE BEEN INCORPORATED INTO THIS DOCUMENT AS A RESULT.

811 Know what's below. Call before you dig.

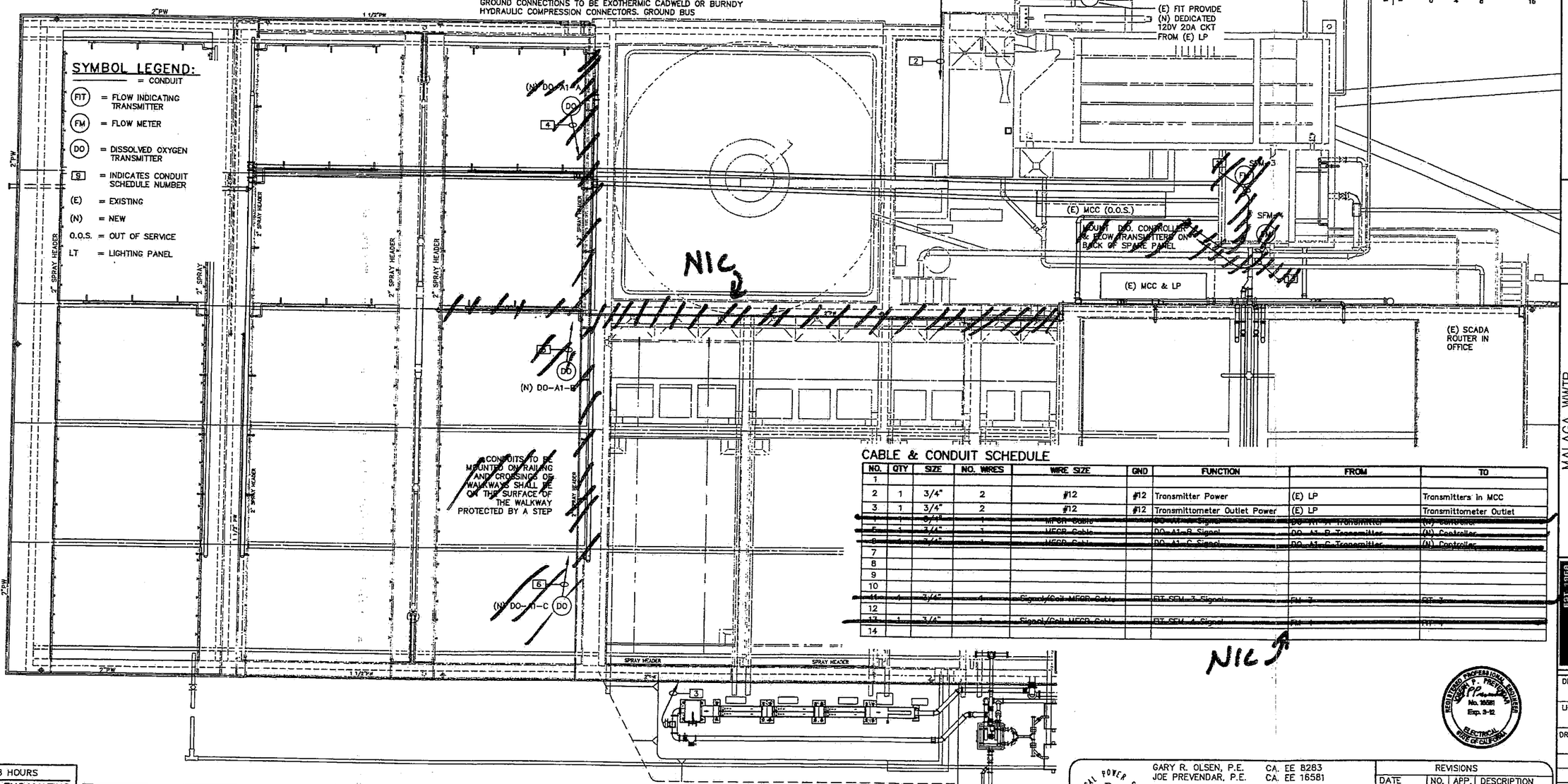

CABLE & CONDUIT SCHEDULE

NO.	QTY	SIZE	NO. WIRES	WIRE SIZE	GND	FUNCTION	FROM	TO
1								
2	1	3/4"	2	#12	#12	Transmitter Power	(E) LP	Transmitters in MCC
3	1	3/4"	2	#12	#12	Transmittometer Outlet Power	(E) LP	Transmittometer Outlet
~~4~~	~~1~~	~~3/4"~~	~~1~~	~~MFCR Cable~~		~~DO-A1-A Signal~~	~~DO-A1-A Transmitter~~	~~(N) Controller~~
~~5~~	~~1~~	~~3/4"~~	~~1~~	~~MFCR Cable~~		~~DO-A1-B Signal~~	~~DO-A1-B Transmitter~~	~~(N) Controller~~
~~6~~	~~1~~	~~3/4"~~	~~1~~	~~MFCR Cable~~		~~DO-A1-C Signal~~	~~DO-A1-C Transmitter~~	~~(N) Controller~~
7								
8								
9								
10								
~~11~~	~~1~~	~~3/4"~~	~~4~~	~~Signal/Coil MFCR Cable~~		~~FIT-SFM-3 Signal~~	~~FM-3~~	~~FIT-3~~
12								
~~13~~	~~1~~	~~3/4"~~	~~4~~	~~Signal/Coil MFCR Cable~~		~~FIT-SFM-4 Signal~~	~~FM-4~~	~~FIT-4~~
14								

NIC

48 HOURS
BEFORE EXCAVATING
CALL "USA" TOLL FREE
800-227-2600
UNDER GROUND SERVICE
ALERT

EPS IS RESPONSIBLE FOR ELECTRICAL SYSTEMS DESIGN ONLY. EPS IS NOT RESPONSIBLE FOR ELECTRICAL SAFETY WORK PROCEDURES AND/OR USE OF REQUIRED PERSONAL PROTECTIVE EQUIPMENT, SEE NFPA 70E "STANDARD FOR ELECTRICAL SAFETY IN THE WORKPLACE" AND OSHA 29 CFR.

CONTRACTOR MUST READ SPECIFICATIONS AND INSTALL MATERIAL AS PER SPECIFICATIONS AND/OR PLANS OR AS PER E.P.S. APPROVAL

ELECTRICAL POWER SYSTEMS E.P.S. INC.
Professional and Consulting Electrical Engineering Since 1974
GARY R. OLSEN, P.E. CA. EE 8283
JOE PREVENDAR, P.E. CA. EE 16581
4049 N. FRESNO ST
FRESNO, CA 93726
(559) 221-7230
FAX: 221-0507
gary@epsfresno.com
joe@epsfresno.com

DATE: Jul 2010
JOB #: PP-10-173
DWG. #: 10570904-PP173-SP1
DRWN. BY: CRT
DSGN. BY: JPP

REVISIONS			
DATE	NO.	APP.	DESCRIPTION

COPYRIGHT 2005 by PROVOST & PRITCHARD ENGINEERING GROUP, INC. ALL RIGHTS RESERVED
The firm of Provost & Pritchard Engineering Group, Inc. retains all ownership and property rights in these plans, specifications, and other deliverables prepared by Provost & Pritchard Engineering Group, Inc. Reproduction or reuse of these plans in any form or manner whatsoever, nor any part thereof, is allowed without the express written consent of Provost & Pritchard Engineering Group, Inc. In the event of unauthorized reuse of these plans by a third party, the third party agrees to hold Provost & Pritchard Engineering Group, Inc. harmless, and shall assume all liability for such reuse. In addition, Provost & Pritchard Engineering Group, Inc. shall be indemnified by the third party for any costs incurred in defending and enforcing these rights.

No.	REVISION	BY	DATE

MALAGA WWTP
MONITORING AND SLUDGE BED
MALAGA COUNTY WATER DISTRICT
FRESNO COUNTY

ELECTRICAL SITE PLAN

EST. 1968
PROVOST & PRITCHARD
CONSULTING GROUP
An Employee Owned Company
286 WEST CromwELL AVENUE
FRESNO, CALIFORNIA 93711-6162
559/449-2700 FAX 559/449-2715
www.provpritch.com

DESIGN ENGINEER: MGT
LICENSE NO: 39,961
DRAFTED BY: DWM
CHECKED BY: MGT
SCALE: AS SHOWN
DATE: 09-01-2009
JOB NO: 10570904
DWG. NO:
SHEET E1 OF 11

7/6/2010 6:51 AM G:\Clients\Malaga CWD - 1057\10570904-Monitoring & Sludge Bed\DWG\ELECTRICAL\10570904-PP173-SP1.dwg -Matt Hofer

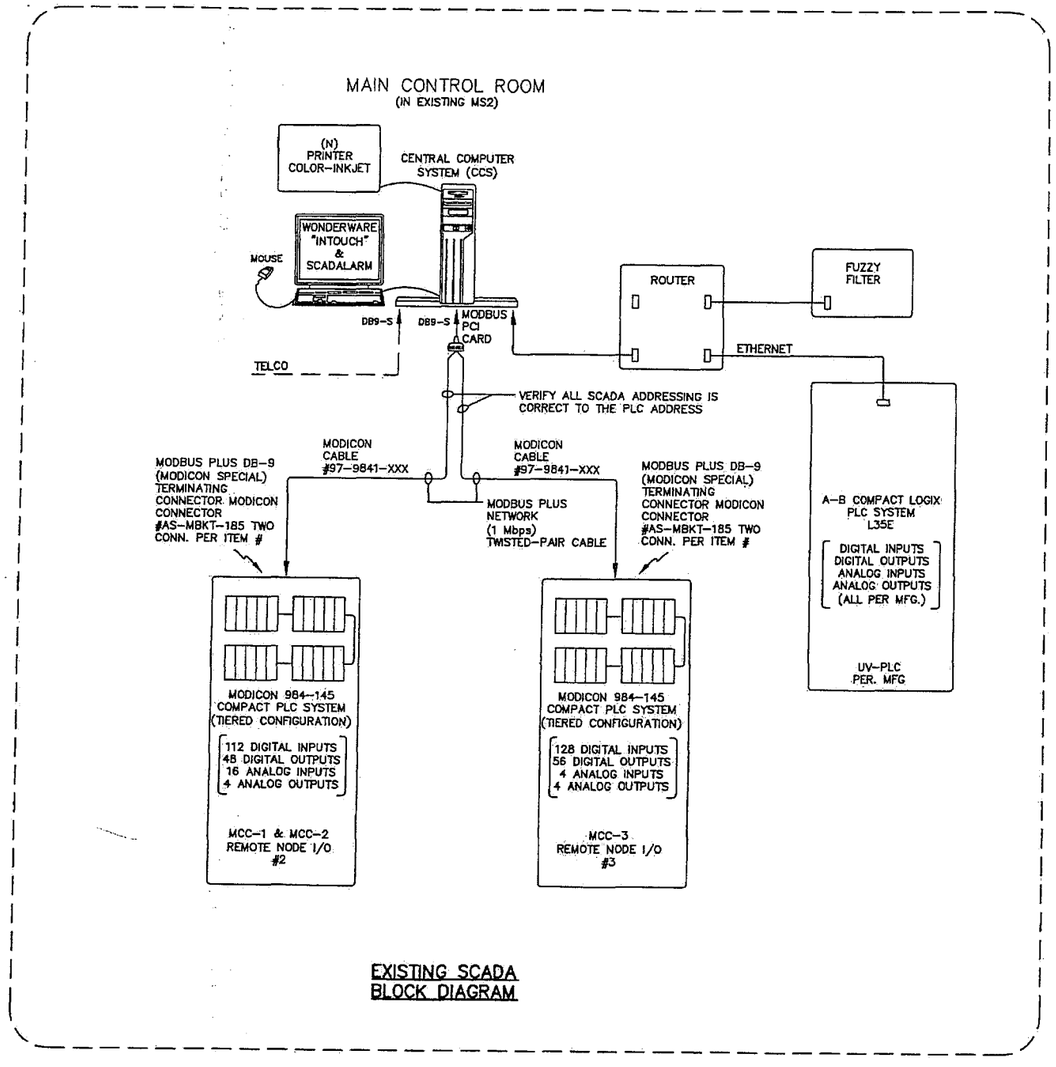

EXISTING SCADA BLOCK DIAGRAM

RECORD DOCUMENT

DATE 4-14-2011

THESE RECORD DOCUMENTS HAVE BEEN PREPARED IN PART, ON THE BASIS OF INFORMATION COMPILED AND FURNISHED BY OTHERS. THE ENGINEER WILL NOT BE RESPONSIBLE FOR ANY ERRORS OR OMISSIONS WHICH HAVE BEEN INCORPORATED INTO THIS DOCUMENT AS A RESULT.

811 Know what's below. Call before you dig.

PROJECT SCOPE TO INCLUDE:

A. EXAMINE AND CORRECT THE PROBLEMS WITHIN THE WONDERWARE HMI AND THE ASSOCIATED LADDER LOGIC PROGRAMS FOR THE MODICON CONTROLLERS RTU #2 AND #3. THE TROUBLESHOOTING AND ASSOCIATED PROGRAM CORRECTIONS WILL INCLUDE:
   1. INFLUENT FLOWS ARE INCORRECT
   2. SCREW PUMP HOUR METERS (INCREASE WHEN SHUTDOWN, NO INCREASE WHEN RUNNING)
   3. CANNOT RUN ALL OF THE MOTORS IN AUTOMATIC ON THE WONDERWARE SCADA CONTROL
   4. BLOWER 2 SHOWS OVERLOAD WHEN IT IS NOT OVERLOADED, IT SHOWS STOPPED WHEN RUNNING
   5. BLOWER 3 SHOWS RUNNING WHEN STOPPED
   6. THE KW METER FOR THE BLOWERS IS NOT DISPLAYING CORRECTLY
   7. BLOWER HOUR METERS ARE NOT READING CORRECTLY
   8. THE ALARM LIST IS LOADED WITH NOV 30TH MULTIPLE ALARMS THAT ACKNOWLEDGE DOES NOT CLEAR
   9. FALSE HIGH LEVEL ALARMS
   10. BARMINUTOR CONTROL DISPLAY IS MISSING CONTROLS

B. WORK WITH PLANT PERSONNEL TO TEST AND VERIFY THE FUNCTIONALITY OF ANY CORRECTIONS/CHANGES.

C. SCADALARM 5.0 IN THE EXISTING HMI PC. THIS IS BASED ON CONFIGURING THE PREVIOUS 15 ALARMS AND AN ADDITIONAL 10 ALARMS FOR THE NEW INSTRUMENTATION AND THE UV SYSTEM. TOTAL OF 25 ALARMS.

D. TEST SCADALARM FOR PROPER ALARM RECOGNITION AND CALL OUT CAPABILITY.

PANELBOARD SCHEDULE		
PANEL	LP	
100	AMP 240/120V 1PH	
CKT	DESCRIPTION / LOCATION	CB
1	(E) Level	20A
3	(E) Chem Pumps	20A
5	(E) MCC LT	20A
7	(E) PLC & I/O	20A
9	(E) Sludge LT	20A
11	(E) Sump Pump	20A
13	(E) Alarm	20A
15		
17		
19	Spare	20A
21	(E) LT	20A
23	(E) LT	20A
25	(E) LT	20A
27	(E) LT	20A
29	(E) LT	20A
2	(E) Air Compressor	20A
4	(E) "	20A
6	(E) GFI	20A
8	(E) Flow Meter	20A
10	(E) "	"
12	(E) GFI S	20A
14	(E) GFI N	20A
16		
18		
20	Spare	20A
22	(E) UPS	20A
24	(E) LT	20A
26	(E) LT	20A
28	(E) 100A Main	100A
30	(E) "	"

REGISTERED PROFESSIONAL ENGINEER JOSEPH P. PRITCHARD No. 16581 Exp. 3-12 ELECTRICAL STATE OF CALIFORNIA

COPYRIGHT 2009 by PROVOST & PRITCHARD CONSULTING GROUP. ALL RIGHTS RESERVED
The firm of Provost & Pritchard Consulting Group, Inc. expressly reserves its common law copyright and other property rights in these plans. These plans are not to be reproduced, changed or copied in any form or manner whatsoever, nor are they to be assigned to any third party without first obtaining the written permission and consent of Provost & Pritchard Consulting Group, Inc. In the event of unauthorized reuse of these plans by a third party, the third party shall hold the firm of Provost & Pritchard Consulting Group, Inc. harmless, and shall bear the cost of Provost & Pritchard Consulting Group, Inc.'s legal fees associated with defending the action in such a case.

No.	REVISION	BY	DATE

MALAGA WWTP
MONITORING AND SLUDGE BED
MALAGA COUNTY WATER DISTRICT
FRESNO COUNTY

ELECTRICAL BLOCK DIAGRAM

EST 1968 PROVOST & PRITCHARD CONSULTING GROUP
An Employee Owned Company
286 WEST CROWELL AVENUE
FRESNO, CALIFORNIA 93705-5152
559/449-2700 FAX 559/449-2715
www.ppcng.com

DESIGN ENGINEER: MGT
LICENSE NO: 39,961
DRAFTED BY: DWM
CHECKED BY: MGT
SCALE: AS SHOWN
DATE: 09-01-2009
JOB NO: 10570904
DWG. NO:
SHEET E2 OF 11

7/6/2010 6:52 AM G:\Clients\Malaga CWD - 1057\10570904-Monitoring & Sludge Bed\DWG\ELECTRICAL\10570904-PP173-CD2.dwg -Matt Hofer

48 HOURS
BEFORE EXCAVATING
CALL "USA" TOLL FREE
800-227-2600
UNDER GROUND SERVICE
ALERT

EPS IS RESPONSIBLE FOR ELECTRICAL SYSTEMS DESIGN ONLY. EPS IS NOT RESPONSIBLE FOR ELECTRICAL SAFETY WORK PROCEDURES AND/OR USE OF REQUIRED PERSONAL PROTECTIVE EQUIPMENT, SEE NFPA 70E "STANDARD FOR ELECTRICAL SAFETY IN THE WORKPLACE" AND OSHA 29 CFR.

CONTRACTOR MUST READ SPECIFICATIONS AND INSTALL MATERIAL AS PER SPECIFICATIONS AND/OR PLANS OR AS PER E.P.S. APPROVAL

ELECTRICAL POWER SYSTEMS E. P. S. INC. Professional and Consulting Electrical Engineering Since 1974
GARY R. OLSEN, P.E. CA. EE 8283
JOE PREVENDAR, P.E. CA. EE 16581
4049 N. FRESNO ST
FRESNO, CA 93726
(559) 221-7230
FAX: 221-0507
gary@epsfresno.com
joe@epsfresno.com

DATE: Jul 2010
JOB #: PP-10-173
DWG. #: 10570904-PP173-CD2
DRWN. BY: CRT
DSGN. BY: JPP

REVISIONS			
DATE	NO.	APP.	DESCRIPTION