EXHIBIT C

ZALCO LABORATORIES, INC.
Analytical & Consulting Services

4309 Armour Avenue
Bakersfield, California 93308

(661) 395-0539
FAX (661) 395-3069

April 22, 2015

Greg Youngblood
E & B Natural Resources Corp.
34740 Merced Ave.
Bakersfield, CA 93308

TEL: (661) 619-7813
FAX: (661) 392-7579

Project ID:
RE: 1503250

Dear Greg Youngblood:

Zalco Laboratories, Inc. received 1 samples on 3/23/2015 for the analyses presented in the following report.

We appreciate your business and look forward to serving you in the future. Please feel free to call our office if you have any questions regarding these test results.

Sincerely,

Juan Magana
Project Manager
CC:Sam Ridgely, Teresa Alvarez, Shams Hasan

NSS: Non Sufficient Sample H: Exceeds Analysis Hold Time TTLC: Total Threshold Limit Concentration STLC: Soluble Threshold Limit Concentration TCLP: Toxicity Characteristic Leaching Procedure MCL: Maximum Contaminant Level *: See Case Narrative
The results in this report apply to the samples analyzed in accordance with the chain of custody document. This analytical report must be reproduced in its entirety.

Note: Samples analyzed for regulatory purposes should be put on ice immediately after sampling and received by the laboratory at temperatures between 0-6°C. Microbiological analysis requires samples to be at least 4-10°C when received at the laboratory. For additional information regarding the limitations of the method(s) referred to, please call us at 661-395-0539.

ZALCO LABORATORIES, INC.

www.zalcolabs.com

Analytical and Consulting Services
4309 Armour Avenue, Bakersfield, CA 93308
(661) 395-0539 FAX (661) 395-3069

E & B Natural Resources Corp.
34740 Merced Ave.
Bakersfield CA 93308

Laboratory No: 1503250-01
Date Received: 3/23/2015
Date Reported: 4/6/2015

Attention: Greg Youngblood

Sample Identification: McVan Produced Water
Sampled by: Date: 3/23/2015 Time: 13:00
Report Notes:

COMPLETE GEOCHEM ANALYSIS

pH	8.20	Specific Gravity @ 60 F	1.000
Electrical Conductivity (EC) *(millimhos/cm @ 25 C)*	0.50	Resistivity (ohm meters @ 25 C)	20.00

Constituents	mg/L	meq/L	Reacting %
Calcium, Ca	2.5	0.12	1.45
Magnesium, Mg	< 0.1	0	0
Sodium, Na	90	3.9	45.38
Potassium, K	3.1	0.079	0.92
Iron, Fe (total)	< 0.1	0	0
Alkalinity as:			
Hydroxide, OH	0	0	0
Carbonate, CO3	0	0	0
Bicarbonate, HCO3	160	2.62	30.38
Chloride, Cl	56	1.6	18.3
Nitrate as NO3	< 2		
Sulfate, SO4	10	0.21	2.42
Sulfide, S	< 1.0		
Boron, B	0.60		
Barium, Ba	< 0.1		
Silica, SiO2	72		
Strontium, Sr	< 0.1		
Totals (Sum)	313	8.53	100

Total Dissolved Solids, (Gravimetric)	350		
Calculated Hardness, CaCO3	6.4		
Total Alkalinity, CaCO3	160		
Sodium Chloride, (total)	210		
		Primary Salinity	41.44
		Secondary Salinity	0
		Total Salinity	41.44
Cation/Anion Balance, %	21.0%		
Sodium, Na (Calculated), mg/L	98.94	Primary Alkalinity	51.16
Langelier Scale Index	-0.47	Secondary Alkalinity	2.9
Stiff/Davis Stability Index	-0.59	Total Alkalinity	54.06

ZALCO LABORATORIES, INC.
4309 Armour Avenue, Bakersfield, CA 93308 (661) 395-0539 FAX (661) 395-3069 www.zalcolabs.com

CHAIN OF CUSTODY, ID# 1503250

Page 1 of 1
Zalco Lab # 1503250
Client PO #
PROJECT ID:
QUOTE ID:

REPORT INFO	INVOICE INFO
Client: E+B Natural Res	Invoice To: Same as Client ☐
Address: 1600 Norris Road	Address:
City, State, Zip: Bakersfield CA 93308	City, State, Zip:
Attention: Greg Youngblood	Attention:
Phone: Results ☐ 661-679-1700	Phone:
Fax: Results ☐	Fax:
Email: Results ☐ gyoungblood@ebnsources.com	Email:
SAMPLED BY:	EMPLOYED BY:

Sample No.*	Sample Description	Date	Sample Time	Type*	# OF CONTAINERS	Geochem								TEMPERATURE (C°)
1	McVan ~~Fresh~~ Water Produced	3/23/15	1300	AQ	1	X								39.0
	4/22/15 Description Change Per Teresa Alvarez - FJ													

COMMENTS:
Turnaround Time:
Routine 10 working days ☐ X
Rush By _____ working days X
Send Copy to State of CA? Yes ☐ No ☐
Attention To:
Send Copy to County? Yes ☐ No ☐
County

RELINQUISHED By: Signature	PRINT	COMPANY	Date	Time	RECEIVED By: Signature	PRINT
[signature]	Björn J. Boitz	E+B	3/23/15	1400	[signature]	FJohnson

NOTE: Samples are discarded 30 days after results unless other arrangements are made. Hazardous samples will be returned to client or disposed of at the client's expense.

*Sample Type Key: AQ-Aqueous; BS-Biosolid; DW-Drinking Water; GW-Ground Water; G-Gas; LPG-Liquid Petroleum Gas; OL-Oil; O-Other; P-Petroleum; S-Soil/Solid; ST-Storm Water; WW-Wastewater
*Sample No.: FOR OFFICE USE ONLY

EXHIBIT D

McVAN AREA FLUID FLOW DIAGRAM

(August 14, 2009)

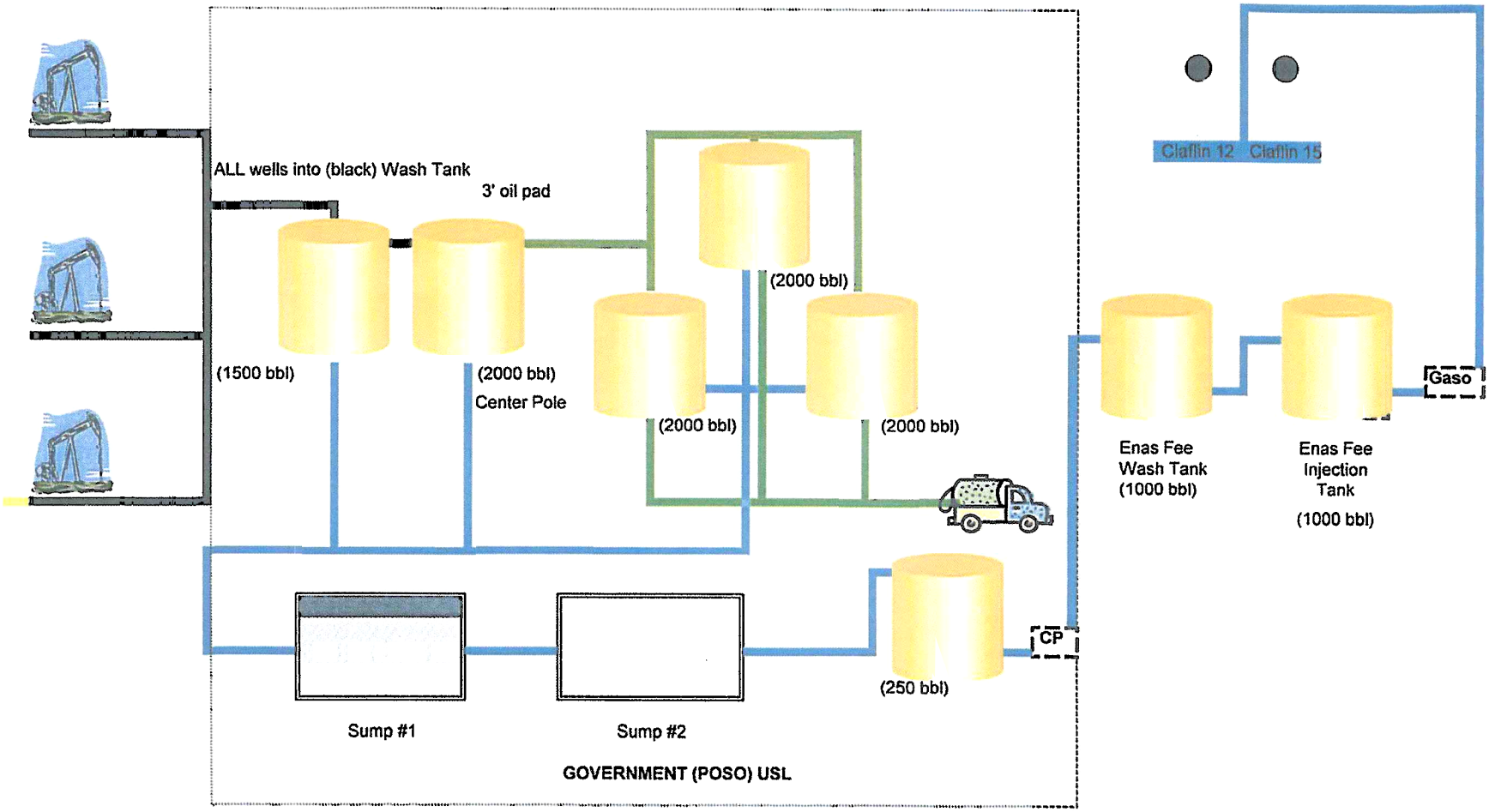

Notes:
1) Black tank does no separation - everything enters the top
2) Fluid enters second tank via central pole deep in tank - primary separation
3) Oil is skimmed off the top to one of three stock tanks (controlled by valves)
4) Oil dehydrates and is sold via truck
5) Water is drained off all tanks and sent to Sump #1
6) Water is pulled off first sump to second sump
7) Water is pulled from second sump to 250 bbl tank
8) Water is pumped to Enas Fee Wash Tank
9) Water goes to Enas Injection Tank & then is pumped to 2 Claflin injection wells
10) Claflin injection wells are 2-7/8" tubing strings cemented to surface