CALIFORNIA REGIONAL WATER QUALITY CONTROL BOARD

CENTRAL VALLEY REGION

11020 Sun Center Drive #200, Rancho Cordova, California 95670-6114
Phone (916) 464-3291 • FAX (916) 464-4645
http://www.waterboards.ca.gov/centralvalley

ORDER NO. R5-2007-0130
NPDES NO. CA0079529

WASTE DISCHARGE REQUIREMENTS FOR THE CITY OF COLFAX WASTEWATER TREATMENT PLANT PLACER COUNTY

The following Discharger is subject to waste discharge requirements as set forth in this Order:

Table 1. Discharger Information

Discharger	City of Colfax
Name of Facility	Wastewater Treatment Plant
Facility Address	23550 Grandview Avenue, Colfax, CA 95713, Placer County
The U.S. Environmental Protection Agency (USEPA) and the Regional Water Quality Control Board have classified this discharge as a minor discharge.	

The discharge by the City of Colfax from the discharge points identified below is subject to waste discharge requirements as set forth in this Order:

Table 2. Discharge Location

Discharge Point	Effluent Description	Discharge Point Latitude	Discharge Point Longitude	Receiving Water
001	Domestic Wastewater and collected and treated seepage	39º 04’ 30” N	120º 56’ 30” W	Unnamed tributary of Smuthers Ravine

Table 3. Administrative Information

This Order was adopted by the Regional Water Quality Control Board on:	**25 October 2007**
This Order shall become effective on:	**50 days after order adoption**
This Order shall expire on:	**1 October 2012**
The Discharger shall file a Report of Waste Discharge in accordance with title 23, California Code of Regulations, as application for issuance of new waste discharge requirements no later than:	**180 days prior to the Order expiration date**

IT IS HEREBY ORDERED, that Order No. 5-01-181 is rescinded upon the effective date of this Order except for enforcement purposes, and, in order to meet the provisions contained in division 7 of the Water Code (commencing with section 13000) and regulations adopted thereunder, and the provisions of the federal Clean Water Act (CWA) and regulations and guidelines adopted thereunder, the Discharger shall comply with the requirements in this Order.

I, PAMELA C. CREEDON, Executive Officer, do hereby certify that this Order with all attachments is a full, true, and correct copy of an Order adopted by the California Regional Water Quality Control Board, Central Valley Region, on 25 October 2007.

PAMELA C. CREEDON, Executive Officer

Table of Contents

I. Facility Information 1
II. Findings 1
III. Discharge Prohibitions 8
IV. Effluent Limitations and Discharge Specifications 9
A. Effluent Limitations – Discharge Point No. 001 9
1. Final Effluent Limitations – Discharge Point No. 001 – Interim Tertiary Treatment System 9
2. Final Effluent Limitations – Discharge Point No. 001 – New Wastewater Treatment Plant 11
3. Interim Effluent Limitations 13
B. Land Discharge Specifications – Not Applicable. 13
C. Reclamation Specifications – Not Applicable. 13
V. Receiving Water Limitations 14
A. Surface Water Limitations 14
B. Groundwater Limitations 16
VI. Provisions 16
A. Standard Provisions 16
B. Monitoring and Reporting Program (MRP) Requirements 21
C. Special Provisions 21
1. Reopener Provisions 21
2. Special Studies, Technical Reports and Additional Monitoring Requirements 22
3. Best Management Practices and Pollution Prevention 25
4. Construction, Operation and Maintenance Specifications 26
5. Special Provisions for Municipal Facilities (POTWs Only) 27
6. Other Special Provisions 29
7. Compliance Schedules 30
VII. Compliance Determination 31

List of Tables

Table 1. Discharger Information ..... Cover
Table 2. Discharge Location ..... Cover
Table 3. Administrative Information ..... Cover
Table 4. Facility Information 1
Table 5. Basin Plan Beneficial Uses 4
Table 6. Effluent Limitations 9
Table 7. Effluent Limitations 11
Table 8. Interim Effluent Limitations 13

List of Attachments

Attachment A – Definitions A-1
Attachment B – Map B-1
Attachment C – Flow Schematic C-1
Attachment D – Standard Provisions D-1

Attachment E – Monitoring and Reporting Program (MRP) E-1
Attachment F – Fact Sheet F-1
Attachment G – Summary of Reasonable Potential Analysis G-1

I. FACILITY INFORMATION

The following Discharger is subject to waste discharge requirements as set forth in this Order:

Table 4. Facility Information

Discharger	City of Colfax
Name of Facility	Wastewater Treatment Plant, Colfax
Facility Address	23550 Grandview Avenue
	Colfax, CA 95713
	Placer County
Facility Contact, Title, and Phone	Joan Phillipe, City Manager,(530) 346-2313
Mailing Address	PO Box 702, 33 South Main Street, Colfax, CA 95713
Type of Facility	Publicly Owned Treatment Works (POTW)
Facility Design Flow	0.2 million gallons per day (mgd)

II. FINDINGS

The California Regional Water Quality Control Board, Central Valley Region (hereinafter Regional Water Board), finds:

A. Background. The City of Colfax (hereinafter Discharger) is currently discharging under Order No. 5-01-180 and National Pollutant Discharge Elimination System (NPDES) Permit No. CA0079529. On 14 June 2001, the Regional Water Board also adopted Cease and Desist Order (CDO) No. 5-01-181. The CDO established time schedules for meeting the discharge prohibitions and effluent limitations under Order No. 5-01-180. The Discharger submitted a Report of Waste Discharge, dated 1 December 2005, and applied for a NPDES permit renewal to discharge up to 0.20 million gallons per day (mgd) of treated domestic wastewater, collected and treated seepage, and storm water runoff from the Wastewater Treatment Plant, hereinafter Facility.

For the purposes of this Order, references to the “discharger” or “permittee” in applicable federal and State laws, regulations, plans, or policy are held to be equivalent to references to the Discharger herein.

B. Facility Description. The Discharger owns and operates a sanitary sewer collection system and the Facility, a publicly owned treatment works (POTW). To comply with the CDO, the Facility upgraded the wastewater treatment system described in Order No. 5-01-180 with an interim tertiary treatment system. The interim tertiary treatment system consists of headworks with a parshall flume and manual bar screen, two mechanically aerated treatment ponds in series, chlorination, coagulation, sedimentation, filtration, dechlorination, and a 69 million gallon storage reservoir. The Facility ceased discharging wastewater to the land. Domestic wastewater and collected seepage from the storage reservoir is treated in the interim tertiary treatment system and discharged through Discharge Point No. 001 (see table on cover page) to an unnamed tributary to

Smuthers Ravine, a water of the United States and a tributary to the North Fork of the American River via Bunch Canyon, within the Sacramento River Watershed.

Attachment B provides a map of the area around the Facility. Attachment C provides flow schematics of the current and proposed Facilities.

C. Legal Authorities. This Order is issued pursuant to section 402 of the federal Clean Water Act (CWA) and implementing regulations adopted by the U.S. Environmental Protection Agency (USEPA) and chapter 5.5, division 7 of the California Water Code (CWC) (commencing with section 13370). It shall serve as a NPDES permit for point source discharges from this Facility to surface waters. This Order also serves as Waste Discharge Requirements (WDRs) pursuant to article 4, chapter 4, division 7 of the CWC (commencing with section 13260).

D. Background and Rationale for Requirements. The Regional Water Board developed the requirements in this Order based on information submitted as part of the application, through monitoring and reporting programs, and other available information. The Fact Sheet (Attachment F), which contains background information and rationale for Order requirements, is hereby incorporated into this Order and constitutes part of the Findings for this Order. Attachments A through E and G are also incorporated into this Order.

E. California Environmental Quality Act (CEQA). Under CWC section 13389, this action to adopt an NPDES permit is exempt from the provisions of CEQA, Public Resources Code sections 21100-21177.

F. Technology-based Effluent Limitations*.* Section 301(b) of the CWA and implementing USEPA permit regulations at section 122.44, title 40 of the Code of Federal Regulations (CFR)[1] require that permits include conditions meeting applicable technology-based requirements at a minimum, and any more stringent effluent limitations necessary to meet applicable water quality standards. The discharge authorized by this Order must meet minimum federal technology-based requirements based on Secondary Treatment Standards at Part 133 and Best Professional Judgment (BPJ) in accordance with Part 125, section 125.3. A detailed discussion of the technology-based effluent limitations development is included in the Fact Sheet (Attachment F).

G. Water Quality-based Effluent Limitations. Section 301(b) of the CWA and section 122.44(d) require that permits include limitations more stringent than applicable federal technology-based requirements where necessary to achieve applicable water quality standards. This Order contains requirements, expressed as a technology equivalence requirement, more stringent than secondary treatment requirements that are necessary to meet applicable water quality standards. The Regional Water Board has considered the factors listed in CWC Section 13241 in establishing these requirements. The rationale for these requirements, which consist of tertiary treatment or equivalent requirements, is discussed in the Fact Sheet.

[1] All further statutory references are to title 40 of the Code of Federal Regulations unless otherwise indicated.

Section 122.44(d)(1)(i) mandates that permits include effluent limitations for all pollutants that are or may be discharged at levels that have the reasonable potential to cause or contribute to an exceedance of a water quality standard, including numeric and narrative objectives within a standard. Where reasonable potential has been established for a pollutant, but there is no numeric criterion or objective for the pollutant, water quality-based effluent limitations (WQBELs) must be established using: (1) EPA criteria guidance under CWA section 304(a), supplemented where necessary by other relevant information; (2) an indicator parameter for the pollutant of concern; or (3) a calculated numeric water quality criterion, such as a proposed State criterion or policy interpreting the State's narrative criterion, supplemented with other relevant information, as provided in 40 CFR section 122.44(d)(1)(vi).

H. Water Quality Control Plans. The Regional Water Board adopted a *Water Quality Control Plan, Fourth Edition (Revised August 2006), for the Sacramento and San Joaquin River Basins* that designates beneficial uses, establishes water quality objectives, and contains implementation programs and policies to achieve those objectives for all waters addressed through the plan. The Basin Plan at page II-2.00 states that the "…*beneficial uses of any specifically identified water body generally apply to its tributary streams*." The Basin Plan does not specifically identify beneficial uses for Smuthers Ravine and its unnamed tributary, but does identify present and potential uses for North Fork of the American River (source to Folsom Lake), to which Smuthers Ravine, via Bunch Canyon, is tributary. These beneficial uses are as follows: municipal and domestic supply; agricultural supply, including irrigation; water contact recreation, including canoeing and rafting; non-contact water recreation, including aesthetic enjoyment; cold freshwater habitat; cold spawning, reproduction, and /or early development; and wildlife habitat.

In addition, the Basin Plan implements State Water Resources Control Board (State Water Board) Resolution No. 88-63, which established state policy that all waters, with certain exceptions, should be considered suitable or potentially suitable for municipal or domestic supply. Thus, as discussed in detail in the Fact Sheet, beneficial uses applicable to unnamed tributary of Smuthers Ravine are as follows:

Table 5. Basin Plan Beneficial Uses

Discharge Point	Receiving Water Name	Beneficial Use(s)
001	Unnamed tributary of Smuthers Ravine, tributary to the North Fork of the American River	Existing: Municipal and domestic supply (MUN); agricultural supply for irrigation (AGR); water contact recreation, including canoeing and rafting (REC-1); non-contact water recreation, including aesthetic enjoyment (REC-2); cold freshwater habitat (COLD); cold spawning, reproduction, and/or early development (SPWN); and wildlife habitat (WILD). Potential: Warm freshwater habitat (WARM). Groundwater: Municipal and domestic supply (MUN); industrial service supply (IND); industrial process supply (PRO), and agricultural supply (AGR).

Requirements of this Order implement the Basin Plan.

I. **National Toxics Rule (NTR) and California Toxics Rule (CTR).** USEPA adopted the NTR on 22 December 1992, and later amended it on 4 May 1995 and 9 November 1999. About forty criteria in the NTR applied in California. On 18 May 2000, USEPA adopted the CTR. The CTR promulgated new toxics criteria for California and, in addition, incorporated the previously adopted NTR criteria that were applicable in the state. The CTR was amended on 13 February 2001. These rules contain water quality criteria for priority pollutants.

J. **State Implementation Policy.** On 2 March 2000, the State Water Board adopted the *Policy for Implementation of Toxics Standards for Inland Surface Waters, Enclosed Bays, and Estuaries of California* (State Implementation Policy or SIP). The SIP became effective on 28 April 2000 with respect to the priority pollutant criteria promulgated for California by the USEPA through the NTR and to the priority pollutant objectives established by the Regional Water Board in the Basin Plan. The SIP became effective on 18 May 2000 with respect to the priority pollutant criteria promulgated by the USEPA through the CTR. The State Water Board adopted amendments to the SIP on 24 February 2005 that became effective on 13 July 2005. The SIP establishes implementation provisions for priority pollutant criteria and objectives and provisions for chronic toxicity control. Requirements of this Order implement the SIP.

K. **Compliance Schedules and Interim Requirements.** In general, an NPDES permit must include final effluent limitations that are consistent with Clean Water Act section 301 and with 40 CFR 122.44(d). There are exceptions to this general rule. The State Water Board has concluded that where the Regional Water Board's Basin Plan allows for schedules of compliance and the Regional Water Board is newly interpreting a narrative standard, it may include schedules of compliance in the permit to meet effluent limits that implement a narrative standard. See In the Matter of Waste Discharge

Requirements for Avon Refinery (State Board Order WQ 2001-06 at pp. 53-55). See also Communities for a Better Environment et al. v. State Water Resources Control Board, 34 Cal.Rptr.3d 396, 410 (2005). The Basin Plan for the Sacramento and San Joaquin Rivers includes a provision that authorizes the use of compliance schedules in NPDES permits for water quality objectives that are adopted after the date of adoption of the Basin Plan, which was 25 September 1995 (See Basin Plan at page IV-16). Consistent with the State Water Board's Order in the CBE matter, the Regional Water Board has the discretion to include compliance schedules in NPDES permits when it is including an effluent limitation that is a "new interpretation" of a narrative water quality objective. This conclusion is also consistent with the United States Environmental Protection Agency policies and administrative decisions. See, e.g., Whole Effluent Toxicity (WET) Control Policy. The Regional Water Board, however, is not required to include a schedule of compliance, but may issue a Time Schedule Order pursuant to Water Code section 13300 or a Cease and Desist Order pursuant to Water Code section 13301 where it finds that the discharger is violating or threatening to violate the permit. The Regional Water Board will consider the merits of each case in determining whether it is appropriate to include a compliance schedule in a permit, and, consistent with the Basin Plan, should consider feasibility of achieving compliance, and must impose a schedule that is as short as practicable to achieve compliance with the objectives, criteria, or effluent limit based on the objective or criteria.

For CTR constituents, Section 2.1 of the SIP provides that, based on a Discharger's request and demonstration that it is infeasible for an existing Discharger to achieve immediate compliance with an effluent limitation derived from a CTR criterion, compliance schedules may be allowed in an NPDES permit. Unless an exception has been granted under section 5.3 of the SIP, a compliance schedule may not exceed 5 years from the date that the permit is issued or reissued, nor may it extend beyond 10 years from the effective date of the SIP (or 18 May 2010) to establish and comply with CTR criterion-based effluent limitations. Where a compliance schedule for a final effluent limitation exceeds 1 year, the Order must include interim numeric limitations for that constituent or parameter. Where allowed by the Basin Plan, compliance schedules and interim effluent limitations or discharge specifications may also be granted to allow time to implement a new or revised water quality objective. This Order includes compliance schedules and interim effluent limitations. A detailed discussion of the basis for the compliance schedules and interim effluent limitations is included in the Fact Sheet.

L. Alaska Rule. On 30 March 2000, USEPA revised its regulation that specifies when new and revised state and tribal water quality standards (WQS) become effective for CWA purposes. (40 CFR § 131.21; 65 Fed. Reg. 24641 (April 27, 2000).) Under the revised regulation (also known as the Alaska rule), new and revised standards submitted to USEPA after 30 May 2000, must be approved by USEPA before being used for CWA purposes. The final rule also provides that standards already in effect and submitted to USEPA by 30 May 2000 may be used for CWA purposes, whether or not approved by USEPA.

M. Stringency of Requirements for Individual Pollutants. This Order contains both technology-based and water quality-based effluent limitations for individual pollutants. The technology-based effluent limitations consist of restrictions on BOD_5 and TSS. The water quality-based effluent limitations consist of restrictions on turbidity and pathogens. This Order's technology-based pollutant restrictions implement the minimum, applicable federal technology-based requirements. In addition, this Order contains effluent limitations more stringent than the minimum, federal technology-based requirements that are necessary to meet water quality standards. These limitations are more stringent than required by the CWA. Specifically, this Order includes effluent limitations for BOD, TSS, turbidity and pathogens that are more stringent than applicable federal standards, but that are nonetheless necessary to meet numeric objectives or protect beneficial uses. The rationale for including these limitations is explained in the Fact Sheet. In addition, the Regional Water Board has considered the factors in Water Code section 13241 in establishing these requirements.

Water quality-based effluent limitations have been scientifically derived to implement water quality objectives that protect beneficial uses. Both the beneficial uses and the water quality objectives have been approved pursuant to federal law and are the applicable federal water quality standards. To the extent that toxic pollutant water quality-based effluent limitations were derived from the CTR, the CTR is the applicable standard pursuant to 40 CFR section 131.38. The scientific procedures for calculating the individual water quality-based effluent limitations are based on the CTR-SIP, which was approved by USEPA on 1 May 2001. All beneficial uses and water quality objectives contained in the Basin Plan were approved under state law and submitted to and approved by USEPA prior to 30 May 2000. Any water quality objectives and beneficial uses submitted to USEPA prior to 30 May 2000, but not approved by USEPA before that date, are nonetheless "*applicable water quality standards for purposes of the [Clean Water] Act*" pursuant to 40 CFR section 131.21(c)(1). Collectively, this Order's restrictions on individual pollutants are no more stringent than required to implement the technology-based requirements of the CWA and the applicable water quality standards for purposes of the CWA.

N. Antidegradation Policy. Section 131.12 requires that the state water quality standards include an antidegradation policy consistent with the federal policy. The State Water Board established California's antidegradation policy in State Water Board Resolution No. 68-16. Resolution No. 68-16 is consistent with the federal antidegradation policy where the federal policy applies under federal law. Resolution No. 68-16 requires that existing quality of waters be maintained unless degradation is justified based on specific findings. The Regional Water Board's Basin Plan implements, and incorporates by reference, both the state and federal antidegradation policies. As discussed in detail in the Fact Sheet the permitted discharge is consistent with the antidegradation provision of section 131.12 and State Water Board Resolution No. 68-16.

O. Anti-Backsliding Requirements. Sections 402(o)(2) and 303(d)(4) of the CWA and federal regulations at title 40, Code of Federal Regulations section 122.44(l) prohibit backsliding in NPDES permits. These anti-backsliding provisions require effluent limitations in a reissued permit to be as stringent as those in the previous permit, with

some exceptions where limitations may be relaxed. All effluent limitations in this Order are at least as stringent as the effluent limitations in the previous Order.

P. Monitoring and Reporting. Section 122.48 requires that all NPDES permits specify requirements for recording and reporting monitoring results. Water Code sections 13267 and 13383 authorizes the Regional Water Board to require technical and monitoring reports. The Monitoring and Reporting Program establishes monitoring and reporting requirements to implement federal and State requirements. This Monitoring and Reporting Program is provided in Attachment E.

Q. Standard and Special Provisions. Standard Provisions, which apply to all NPDES permits in accordance with section 122.41, and additional conditions applicable to specified categories of permits in accordance with section 122.42, are provided in Attachment D. The discharger must comply with all standard provisions and with those additional conditions that are applicable under section 122.42. The Regional Water Board has also included in this Order special provisions applicable to the Discharger. A rationale for the special provisions contained in this Order is provided in the attached Fact Sheet.

R. Provisions and Requirements Implementing State Law. The provisions/requirements in subsections V.B and VI.C.2 of this Order are included to implement state law only. These provisions/requirements are not required or authorized under the federal CWA; consequently, violations of these provisions/requirements are not subject to the enforcement remedies that are available for NPDES violations.

S. Notification of Interested Parties. The Regional Water Board has notified the Discharger and interested agencies and persons of its intent to prescribe Waste Discharge Requirements for the discharge and has provided them with an opportunity to submit their written comments and recommendations. Details of notification are provided in the Fact Sheet of this Order.

T. Consideration of Public Comment. The Regional Water Board, in a public meeting, heard and considered all comments pertaining to the discharge. Details of the Public Hearing are provided in the Fact Sheet of this Order.

III. DISCHARGE PROHIBITIONS

A. Discharge of wastewater at a location or in a manner different from that described in the Findings is prohibited.

B. The by-pass or overflow of wastes to surface waters is prohibited, except as allowed by Federal Standard Provisions I.G. and I.H. (Attachment D).

C. Neither the discharge nor its treatment shall create a nuisance as defined in Section 13050 of the California Water Code.

D. The Discharger shall not allow pollutant-free wastewater to be discharged into the collection, treatment, and disposal system in amounts that significantly diminish the system's capability to comply with this Order. Pollutant-free wastewater means storm water runoff, groundwater, cooling waters, and condensates that are essentially free of pollutants.

E. Discharge of wastewater to land for irrigation or other purposes is prohibited.

IV. EFFLUENT LIMITATIONS AND DISCHARGE SPECIFICATIONS

A. Effluent Limitations – Discharge Point No. 001

1. Final Effluent Limitations – Discharge Point No. 001 – Interim Tertiary Treatment System

The Discharger shall maintain compliance with the following effluent limitations at Discharge Point No. 001, with compliance measured at Monitoring Location EFF-001 as described in the attached MRP (Attachment E):

a. The Discharger shall maintain compliance with the effluent limitations specified in Table 6 for discharges from the interim tertiary treatment system (Permit Effective Date through 31 December 2008):

Table 6. Effluent Limitations

Parameter	Units	Effluent Limitations				
		Average Monthly	Average Weekly	Maximum Daily	Instantaneous Minimum	Instantaneous Maximum
Conventional Pollutants						
Biochemical Oxygen Demand (BOD) (5-day @ 20 Deg. C)	mg/L	10	15	25	--	--
	lbs/day[1]	17	25	42	--	--
Total Suspended Solids (TSS)	mg/L	10	15	25	--	--
	lbs/day[1]	17	25	42	--	--
pH	standard units	--	--	--	6.5	8.5
Priority Pollutants						
Copper, Total Recoverable	µg/L	2.7	--	5.5	--	--
Cyanide, Total (as CN)	µg/L	4.3	--	8.5	--	--
Bis (2-Ethylhexyl) Phthalate	µg/L	1.8	--	3.6	--	--
Non-Conventional Pollutants						
Aluminum, Total Recoverable	µg/L	71	--	143	--	--
Ammonia Nitrogen, Total (as N)	mg/L	0.8	--	2.1	--	--
Nitrate Nitrogen, Total (as N)	mg/L	10	--	--	--	--
Settleable Solids	mL/L-hr	0.1	--	0.2	--	--
Turbidity	NTU	--	--	--	--	10
Total Coliform	MPN/100 mL	--	--	--	--	240

[1] Based on an average dry weather design flow of 0.2 mgd.

b. **Percent Removal:** The average monthly percent removal of BOD 5-day 20°C and total suspended solids shall not be less than 85 percent.

c. **Total Recoverable Iron**. Based on a calendar year, the annual average total recoverable iron concentration in the effluent shall not exceed 300 µg/L.

d. **Total Recoverable Manganese**. Based on a calendar year, the annual average total recoverable manganese concentration in the effluent shall not exceed 50 µg/L.

e. **Mass Limitation for Mercury**. The monthly average total recoverable mercury loading in the effluent shall not exceed 0.000761 lbs per month.

f. **Electrical Conductivity**. The effluent shall not exceed an interim average monthly limitation of 993 µmhos/cm.

g. **Acute Whole Effluent Toxicity.** Survival of aquatic organisms in 96-hour bioassays of undiluted waste shall be no less than:

   i. 70%, minimum for any one bioassay; and
   ii. 90%, median for any three consecutive bioassays.

h. **Total Residual Chlorine.** Effluent total residual chlorine shall not exceed:

   i. 0.01 mg/L, as a 4-day average;
   ii. 0.017 lbs/day, as a 4-day average;
   iii. 0.02 mg/L as a 1-hour average; and
   iv. 0.033 lbs/day, as a 1-hour average.

i. **Turbidity.** Effluent turbidity shall not exceed:

   i. 2 NTU, as a daily average; and
   ii. 5 NTU, more than 5 percent of the time within a 24-hour period.

j. **Average Daily Dry Weather Flow.** The Average Daily Dry Weather Discharge Flow shall not exceed 0.2 mgd.

k. **Total Coliform Organisms.** Effluent total coliform organisms shall not exceed:

   i. 2.2 most probable number (MPN) per 100 mL, as a 7-day median;
   ii. 23 MPN/100 mL, more than once in any 30-day period.

l. **Persistent Chlorinated Hydrocarbon Pesticides:** Persistent chlorinated hydrocarbon pesticides shall not be detected in the effluent. No individual pesticide may be present in the discharge at detectable concentrations. The discharger shall use USEPA standard analytical techniques with the lowest possible detectable level for persistent chlorinated hydrocarbon pesticides.

2. Final Effluent Limitations – Discharge Point No. 001 – New Wastewater Treatment Plant

The Discharger shall maintain compliance with the following effluent limitations at Discharge Point No. 001, with compliance measured at Monitoring Location EFF-001 as described in the attached MRP (Attachment E):

a. The Discharger shall maintain compliance with the effluent limitations specified in Table 7 for discharges from the new wastewater treatment plant beginning **1 January 2009**:

Table 7. Effluent Limitations

Parameter	Units	Effluent Limitations				
		Average Monthly	Average Weekly	Maximum Daily	Instantaneous Minimum	Instantaneous Maximum
Conventional Pollutants						
Biochemical Oxygen Demand (BOD) (5-day @ 20 Deg. C)	mg/L	10	15	25	--	--
	lbs/day[1]	23	34	57	--	--
Total Suspended Solids (TSS)	mg/L	10	15	25	--	--
	lbs/day[1]	23	34	57	--	--
pH	standard units	--	--	--	6.5	8.5
Priority Pollutants						
Copper, Total Recoverable	µg/L	2.7	--	5.5	--	--
Cyanide, Total (as CN)	µg/L	4.3	--	8.5	--	--
Bis (2-Ethylhexyl) Phthalate	µg/L	1.8	--	3.6	--	--
Non-Conventional Pollutants						
Aluminum, Total Recoverable	µg/L	71	--	143	--	--
Ammonia Nitrogen, Total (as N)	mg/L	0.8	--	2.1	--	--
Nitrate Nitrogen, Total (as N)	mg/L	10	--	--	--	--
Settleable Solids	mL/L-hr	0.1	--	0.2	--	--
Turbidity	NTU	--	--	--	--	10
Total Coliform	MPN/100 mL	--	--	--	--	240

[1] Based on an average dry weather design flow of 0.275 mgd.

b. **Percent Removal:** The average monthly percent removal of BOD 5-day 20°C and total suspended solids shall not be less than 85 percent.

c. **Total Recoverable Iron**. Based on a calendar year, the annual average total recoverable iron concentration in the effluent shall not exceed 300 µg/L.

d. **Total Recoverable Manganese**. Based on a calendar year, the annual average total recoverable manganese concentration in the effluent shall not exceed 50 µg/L.

e. **Mass Limitation for Mercury**. The monthly average total recoverable mercury loading in the effluent shall not exceed 0.000761 lbs per month.

f. **Electrical Conductivity**. The effluent shall not exceed an interim average monthly effluent limitation of 993 µmhos/cm.

g. **Acute Whole Effluent Toxicity.** Survival of aquatic organisms in 96-hour bioassays of undiluted waste shall be no less than:

   i. 70%, minimum for any one bioassay; and
   ii. 90%, median for any three consecutive bioassays.

h. **Total Residual Chlorine.** Effluent total residual chlorine shall not exceed:

   i. 0.01 mg/L, as a 4-day average;
   ii. 0.017 lbs/day, as a 4-day average;
   iii. 0.02 mg/L as a 1-hour average; and
   iv. 0.033 lbs/day, as a 1-hour average.

i. **Turbidity.** Effluent turbidity shall not exceed:

   i. 2 NTU, as a daily average; and
   ii. 5 NTU, more than 5 percent of the time within a 24-hour period.

j. **Average Daily Dry Weather Flow.** The Average Daily Dry Weather Discharge Flow shall not exceed 0.275 mgd.

k. **Total Coliform Organisms.** Effluent total coliform organisms shall not exceed:

   i. 2.2 most probable number (MPN) per 100 mL, as a 7-day median;
   ii. 23 MPN/100 mL, more than once in any 30-day period.

l. **Persistent Chlorinated Hydrocarbon Pesticides:** Persistent chlorinated hydrocarbon pesticides shall not be detected in the effluent. No individual pesticide may be present in the discharge at detectable concentrations. The discharger shall use USEPA standard analytical techniques with the lowest possible detectable level for persistent chlorinated hydrocarbon pesticides.

3. Interim Effluent Limitations

a. During the period beginning on the Permit Effective Date and ending on **31 December 2008**, the Discharger shall maintain compliance with the following limitations at Discharge Point No. 001, with compliance measured at Monitoring Location EFF-001 as described in the attached MRP. These interim effluent limitations shall apply in lieu of the corresponding final effluent limitations specified for the same parameters during the time period indicated in this provision.

Table 8. Interim Effluent Limitations

Parameter	Units	Effluent Limitations				
		Average Monthly	Average Weekly	Maximum Daily	Instantaneous Minimum	Instantaneous Maximum
Copper, Total Recoverable	µg/L	--	--	17.7	--	--
Ammonia Nitrogen, Total (as N)	mg/L	--	--	16.1	--	--
4,4-DDE	µg/L	--	--	0.04	--	--

b. During the period beginning on the Permit Effective Date and until the final effluent limitations are effective in accordance with Sections IV.A.1.f and IV.A.2.f above, the Discharger shall maintain compliance with an interim performance-based effluent limitation of 993 µmhos/cm for electrical conductivity at Discharge Point No. 001, with compliance measured at Monitoring Location EFF-001 as described in the attached MRP. These interim performance-based effluent limitations shall apply in lieu of the corresponding final effluent limitations specified for the same parameters during the time period indicated in this provision.

B. Land Discharge Specifications – Not Applicable.

C. Reclamation Specifications – Not Applicable.

V. RECEIVING WATER LIMITATIONS

A. Surface Water Limitations

Receiving water limitations are based on water quality objectives contained in the Basin Plan and are a required part of this Order. The discharge shall not cause the following in the receiving water:

1. **Fecal Coliform.** The fecal coliform concentration, based on a minimum of not less than five samples for any 30-day period, to exceed a geometric mean of 200 MPN/100 mL, nor more than ten percent of the total number of fecal coliform samples taken during any 30-day period to exceed 400 MPN/100 mL.

2. **Biostimulatory Substances**. Water to contain biostimulatory substances which promote aquatic growths in concentrations that cause nuisance or adversely affect beneficial uses.

3. **Chemical Constituents**. Chemical constituents to be present in concentrations that adversely affect beneficial uses.

4. **Discoloration**. Discoloration that causes nuisance or adversely affects beneficial uses.

5. **Dissolved Oxygen**:

    a. The monthly median of the mean daily dissolved oxygen concentration to fall below 85 percent of saturation in the main water mass;
    b. The 95 percentile dissolved oxygen concentration to fall below 75 percent of saturation; nor
    c. The dissolved oxygen concentration to be reduced below 7.0 mg/L at any time.

6. **Floating Material**. Floating material to be present in amounts that cause nuisance or adversely affect beneficial uses.

7. **Oil and Grease**. Oils, greases, waxes, or other materials to be present in concentrations that cause nuisance, result in a visible film or coating on the surface of the water or on objects in the water, or otherwise adversely affect beneficial uses.

8. **pH**. The pH to be depressed below 6.5, raised above 8.5, nor changed by more than 0.5. A one-month averaging period may be applied when calculating the pH change of 0.5 units.

9. **Pesticides**:

    a. Pesticides to be present, individually or in combination, in concentrations that adversely affect beneficial uses;

b. Pesticides to be present in bottom sediments or aquatic life in concentrations that adversely affect beneficial uses;
c. Total identifiable persistent chlorinated hydrocarbon pesticides to be present in the water column at concentrations detectable within the accuracy of analytical methods approved by USEPA or the Executive Officer.
d. Pesticide concentrations to exceed those allowable by applicable antidegradation policies (see State Water Board Resolution No. 68-16 and 40 CFR §131.12.).
e. Pesticide concentrations to exceed the lowest levels technically and economically achievable.
f. Pesticides to be present in concentration in excess of the maximum contaminant levels set forth in California Code of Regulations, Title 22, Division 4, Chapter 15**/**specified in Table 64444-A (Organic Chemicals) of Section 64444 of Title 22 of the California Code of Regulations.
g. Thiobencarb to be present in excess of 1.0 µg/L.

10. **Radioactivity**:

a. Radionuclides to be present in concentrations that are harmful/deleterious to human, plant, animal, or aquatic life nor that result in the accumulation of radionuclides in the food web to an extent that presents a hazard to human, plant, animal, or aquatic life.
b. Radionuclides to be present in excess of the maximum contaminant levels specified in Table 4 (MCL Radioactivity) of Section 64443 of Title 22 of the California Code of Regulations.

11. **Suspended Sediments**. The suspended sediment load and suspended sediment discharge rate of surface waters to be altered in such a manner as to cause nuisance or adversely affect beneficial uses.

12. **Settleable Substances**. Substances to be present in concentrations that result in the deposition of material that causes nuisance or adversely affects beneficial uses.

13. **Suspended Material**. Suspended material to be present in concentrations that cause nuisance or adversely affect beneficial uses.

14. **Taste and Odors**. Taste- or odor-producing substances to be present in concentrations that impart undesirable tastes or odors to fish flesh or other edible products of aquatic origin, or that cause nuisance, or otherwise adversely affect beneficial uses or to domestic or municipal water supplies.

15. **Temperature**. The natural temperature to be increased by more than 5°F.

16. **Toxicity**. Toxic substances to be present, individually or in combination, in concentrations that produce detrimental physiological responses in human, plant, animal, or aquatic life.

17. **Turbidity**. The turbidity to increase as follows:

    a. More than 1 Nephelometric Turbidity Unit (NTU) where natural turbidity is between 0 and 5 NTUs.
    b. More than 20 percent where natural turbidity is between 5 and 50 NTUs.
    c. More than 10 NTU where natural turbidity is between 50 and 100 NTUs.
    d. More than 10 percent where natural turbidity is greater than 100 NTUs.

    When wastewater is treated to a tertiary level (including coagulation) or equivalent, a one-month averaging period may be used when determining compliance with this Receiving Surface Water Limitation for turbidity.

B. Groundwater Limitations

1. Release of waste constituents from any storage, treatment, or disposal component associated with the wastewater treatment plant, in combination with other sources, shall not cause the underlying groundwater to contain waste constituents in concentrations greater than background water quality. Any increase in Total Dissolved Solids (TDS) or Electrical Conductivity (EC) concentrations within the monitoring points, when compared to background, shall not exceed the increase typically caused by the percolation discharge of domestic wastewater, and shall not violate water quality objectives, impact beneficial uses, or cause pollution or nuisance. For purposes of this limitation, the monitoring points are defined by the monitoring well locations.

2. Release of waste constituents from any storage, treatment, or disposal component associated with the wastewater treatment plant shall not, in combination with other sources of the waste constituents, cause groundwater within influence of the wastewater treatment plant to contain waste constituents in concentrations in excess of natural background quality or that listed below, whichever is greater:

    a. Total coliform organisms median of 2.2 MPN/100 mL over any 7-day period.

VI. PROVISIONS

A. Standard Provisions

1. The Discharger shall comply with all Standard Provisions included in Attachment D of this Order.

2. The Discharger shall comply with the following provisions:

    a. If the Discharger's wastewater treatment plant is publicly owned or subject to regulation by California Public Utilities Commission, it shall be supervised and operated by persons possessing certificates of appropriate grade according to Title 23, CCR, Division 3, Chapter 26.

b. After notice and opportunity for a hearing, this Order may be terminated or modified for cause, including, but not limited to:

   i. violation of any term or condition contained in this Order;

   ii. obtaining this Order by misrepresentation or by failing to disclose fully all relevant facts;

   iii. a change in any condition that requires either a temporary or permanent reduction or elimination of the authorized discharge; and

   iv. a material change in the character, location, or volume of discharge.

   The causes for modification include:

   - *New regulations.* New regulations have been promulgated under Section 405(d) of the Clean Water Act, or the standards or regulations on which the permit was based have been changed by promulgation of amended standards or regulations or by judicial decision after the permit was issued.

   - *Land application plans.* When required by a permit condition to incorporate a land application plan for beneficial reuse of sewage sludge, to revise an existing land application plan, or to add a land application plan.

   - *Change in sludge use or disposal practice.* Under 40 Code of Federal Regulations (CFR) 122.62(a)(1), a change in the Discharger's sludge use or disposal practice is a cause for modification of the permit. It is cause for revocation and reissuance if the Discharger requests or agrees.

   The Regional Water Board may review and revise this Order at any time upon application of any affected person or the Regional Water Board's own motion.

c. If a toxic effluent standard or prohibition (including any scheduled compliance specified in such effluent standard or prohibition) is established under Section 307(a) of the CWA, or amendments thereto, for a toxic pollutant that is present in the discharge authorized herein, and such standard or prohibition is more stringent than any limitation upon such pollutant in this Order, the Regional Water Board will revise or modify this Order in accordance with such toxic effluent standard or prohibition.

   The Discharger shall comply with effluent standards and prohibitions within the time provided in the regulations that establish those standards or prohibitions, even if this Order has not yet been modified.

d. This Order shall be modified, or alternately revoked and reissued, to comply with any applicable effluent standard or limitation issued or approved under Sections 301(b)(2)(C) and (D), 304(b)(2), and 307(a)(2) of the CWA, if the effluent standard or limitation so issued or approved:

i. contains different conditions or is otherwise more stringent than any effluent limitation in the Order; or

ii. controls any pollutant limited in the Order.

The Order, as modified or reissued under this paragraph, shall also contain any other requirements of the CWA then applicable.

e. The provisions of this Order are severable. If any provision of this Order is found invalid, the remainder of this Order shall not be affected.

f. The Discharger shall take all reasonable steps to minimize any adverse effects to waters of the State or users of those waters resulting from any discharge or sludge use or disposal in violation of this Order. Reasonable steps shall include such accelerated or additional monitoring as necessary to determine the nature and impact of the non-complying discharge or sludge use or disposal.

g. The Discharger shall ensure compliance with any existing or future pretreatment standard promulgated by USEPA under Section 307 of the CWA, or amendment thereto, for any discharge to the municipal system.

h. The discharge of any radiological, chemical or biological warfare agent or high-level, radiological waste is prohibited.

i. A copy of this Order shall be maintained at the discharge facility and be available at all times to operating personnel. Key operating personnel shall be familiar with its content.

j. Safeguard to electric power failure:

i. The Discharger shall provide safeguards to assure that, should there be reduction, loss, or failure of electric power, the discharge shall comply with the terms and conditions of this Order.

ii. Upon written request by the Regional Water Board the Discharger shall submit a written description of safeguards. Such safeguards may include alternate power sources, standby generators, retention capacity, operating procedures, or other means. A description of the safeguards provided shall include an analysis of the frequency, duration, and impact of power failures experienced over the past five years on effluent quality and on the capability of the Discharger to comply with the terms and conditions of the Order. The adequacy of the safeguards is subject to the approval of the Regional Water Board.

iii. Should the treatment works not include safeguards against reduction, loss, or failure of electric power, or should the Regional Water Board not approve the existing safeguards, the Discharger shall, within ninety days of having been advised in writing by the Regional Water Board that the existing safeguards

are inadequate, provide to the Regional Water Board and USEPA a schedule of compliance for providing safeguards such that in the event of reduction, loss, or failure of electric power, the Discharger shall comply with the terms and conditions of this Order. The schedule of compliance shall, upon approval of the Regional Water Board, become a condition of this Order.

k. The Discharger, upon written request of the Regional Water Board, shall file with the Board a technical report on its preventive (failsafe) and contingency (cleanup) plans for controlling accidental discharges, and for minimizing the effect of such events. This report may be combined with that required under Regional Water Board Standard Provision VI.A.2.m.

   The technical report shall:

   i. Identify the possible sources of spills, leaks, untreated waste by-pass, and contaminated drainage. Loading and storage areas, power outage, waste treatment unit outage, and failure of process equipment, tanks and pipes should be considered.

   ii. Evaluate the effectiveness of present facilities and procedures and state when they became operational.

   iii. Predict the effectiveness of the proposed facilities and procedures and provide an implementation schedule containing interim and final dates when they will be constructed, implemented, or operational.

   The Regional Water Board, after review of the technical report, may establish conditions which it deems necessary to control accidental discharges and to minimize the effects of such events. Such conditions shall be incorporated as part of this Order, upon notice to the Discharger.

l. A publicly owned treatment works (POTW) whose waste flow has been increasing, or is projected to increase, shall estimate when flows will reach hydraulic and treatment capacities of its treatment and disposal facilities. The projections shall be made in January, based on the last three years' average dry weather flows, peak wet weather flows and total annual flows, as appropriate. When any projection shows that capacity of any part of the facilities may be exceeded in four years, the Discharger shall notify the Regional Water Board by 31 January. A copy of the notification shall be sent to appropriate local elected officials, local permitting agencies and the press. Within 120 days of the notification, the Discharger shall submit a technical report showing how it will prevent flow volumes from exceeding capacity or how it will increase capacity to handle the larger flows. The Regional Water Board may extend the time for submitting the report.

m. The Discharger shall submit technical reports as directed by the Executive Officer. All technical reports required herein that involve planning, investigation, evaluation, or design, or other work requiring interpretation and proper

application of engineering or geologic sciences, shall be prepared by or under the direction of persons registered to practice in California pursuant to California Business and Professions Code, sections 6735, 7835, and 7835.1. To demonstrate compliance with Title 16, CCR, sections 415 and 3065, all technical reports must contain a statement of the qualifications of the responsible registered professional(s). As required by these laws, completed technical reports must bear the signature(s) and seal(s) of the registered professional(s) in a manner such that all work can be clearly attributed to the professional responsible for the work.

n. Laboratories that perform sample analyses must be identified in all monitoring reports submitted to the Regional Water Board and USEPA.

o. The Discharger shall conduct analysis on any sample provided by USEPA as part of the Discharge Monitoring Quality Assurance (DMQA) program. The results of any such analysis shall be submitted to USEPA's DMQA manager.

p. Effluent samples shall be taken downstream of the last addition of wastes to the treatment or discharge works where a representative sample may be obtained prior to mixing with the receiving waters. Samples shall be collected at such a point and in such a manner to ensure a representative sample of the discharge.

q. All monitoring and analysis instruments and devices used by the Discharger to fulfill the prescribed monitoring program shall be properly maintained and calibrated as necessary, at least yearly, to ensure their continued accuracy.

r. The Discharger shall file with the Regional Water Board technical reports on self-monitoring performed according to the detailed specifications contained in the Monitoring and Reporting Program attached to this Order.

s. The results of all monitoring required by this Order shall be reported to the Regional Water Board, and shall be submitted in such a format as to allow direct comparison with the limitations and requirements of this Order. Unless otherwise specified, discharge flows shall be reported in terms of the monthly average and the daily maximum discharge flows.

t. The Regional Water Board is authorized to enforce the terms of this permit under several provisions of the CWC, including, but not limited to, sections 13385, 13386, and 13387.

u. For POTWs, prior to making any change in the point of discharge, place of use, or purpose of use of treated wastewater that results in a decrease of flow in any portion of a watercourse, the Discharger must file a petition with the State Water Board, Division of Water Rights, and receive approval for such a change. (CWC section 1211).

v. In the event the Discharger does not comply or will be unable to comply for any reason, with any prohibition, maximum daily effluent limitation, 1-hour average

effluent limitation, or receiving water limitation contained in this Order, the Discharger shall notify the Regional Water Board by telephone (916) 464-3291 within 24 hours of having knowledge of such noncompliance, and shall confirm this notification in writing within five days, unless the Regional Water Board waives confirmation. The written notification shall include the information required by Attachment D, Section V.E.1 [40 CFR section 122.41(l)(6)(i)].

B. Monitoring and Reporting Program (MRP) Requirements

1. The Discharger shall comply with the MRP, and future revisions thereto, in Attachment E of this Order.

C. Special Provisions

1. Reopener Provisions

a. This Order may be reopened for modification, or revocation and reissuance, as a result of the detection of a reportable priority pollutant generated by special conditions included in this Order. These special conditions may be, but are not limited to, fish tissue sampling, whole effluent toxicity, monitoring requirements on internal waste stream(s), and monitoring for surrogate parameters. Additional requirements may be included in this Order as a result of the special condition monitoring data.

b. Conditions that necessitate a major modification of a permit are described in 40 CFR section 122.62, including:

   i. If new or amended applicable water quality standards are promulgated or approved pursuant to Section 303 of the CWA, or amendments thereto, this permit may be reopened and modified in accordance with the new or amended standards.

   ii. When new information, that was not available at the time of permit issuance, would have justified different permit conditions at the time of issuance.

c. **Pollution Prevention.** This Order requires the Discharger prepare pollution prevention plans following CWC section 13263.3(d)(3) for ammonia; copper; and 4,4-DDE. Based on a review of the pollution prevention plans, this Order may be reopened for addition and/or modification of effluent limitations and requirements for these constituents.

d. **Whole Effluent Toxicity.** As a result of a Toxicity Reduction Evaluation (TRE), this Order may be reopened to include a chronic toxicity limitation, a new acute toxicity limitation, and/or a limitation for a specific toxicant identified in the TRE. Additionally, if the State Water Board revises the SIP's toxicity control provisions that would require the establishment of numeric chronic toxicity effluent limitations, this Order may be reopened to include a numeric chronic toxicity effluent limitation based on the new provisions.

e. **Water Effects Ratios (WER) and Metal Translators.** A default WER of 1.0 has been used in this Order for calculating CTR criteria for applicable priority pollutant inorganic constituents. In addition, as necessary, default dissolved-to-total metal translators have been used to convert water quality objectives from dissolved to total recoverable when developing effluent limitations for certain inorganic parameters. If the Discharger performs studies to determine site-specific WERs and/or site-specific dissolved-to-total metal translators, this Order may be reopened to modify the effluent limitations for the applicable inorganic constituents.

2. Special Studies, Technical Reports and Additional Monitoring Requirements

a. **Chronic Whole Effluent Toxicity.** For compliance with the Basin Plan's narrative toxicity objective, this Order requires the Discharger to conduct chronic whole effluent toxicity testing, as specified in the Monitoring and Reporting Program (Attachment E, Section V.). Furthermore, this Provision requires the Discharger to investigate the causes of, and identify corrective actions to reduce or eliminate effluent toxicity. If the discharge exceeds the toxicity numeric monitoring trigger established in this Provision, the Discharger is required to initiate a Toxicity Reduction Evaluation (TRE), in accordance with an approved TRE Work Plan, and take actions to mitigate the impact of the discharge and prevent reoccurrence of toxicity. A TRE is a site-specific study conducted in a stepwise process to identify the source(s) of toxicity and the effective control measures for effluent toxicity. TREs are designed to identify the causative agents and sources of whole effluent toxicity, evaluate the effectiveness of the toxicity control options, and confirm the reduction in effluent toxicity. This Provision includes requirements for the Discharger to develop and submit a TRE Work Plan and includes procedures for accelerated chronic toxicity monitoring and TRE initiation.

i. **Initial Investigative Toxicity Reduction Evaluation (TRE) Work Plan. Within 90 days of the effective date of this Order,** the Discharger shall submit to the Regional Water Board an Initial Investigative TRE Work Plan for approval by the Executive Officer. This should be a one to two page document including, at minimum:

a) A description of the investigation and evaluation techniques that will be used to identify potential causes and sources of effluent toxicity, effluent variability, and treatment system efficiency;

b) A description of the Facility's methods of maximizing in-house treatment efficiency and good housekeeping practices, and a list of all chemicals used in operation of the Facility; and

c) A discussion of who will conduct the Toxicity Identification Evaluation, if necessary (i.e. an in-house expert or outside contractor).

ii. **Accelerated Monitoring and TRE Initiation.** When the numeric toxicity monitoring trigger is exceeded during regular chronic toxicity monitoring, and the testing meets all test acceptability criteria, the Discharger shall initiate accelerated monitoring as required in the Accelerated Monitoring Specifications. WET testing results exceeding the monitoring trigger during accelerated monitoring demonstrates a pattern of toxicity and requires the Discharger to initiate a TRE to address the effluent toxicity.

iii. **Numeric Monitoring Trigger.** The numeric toxicity monitoring trigger is > **1 TUc** (where TUc = 100/NOEC). The monitoring trigger is not an effluent limitation; it is the toxicity threshold at which the Discharger is required to begin accelerated monitoring and initiate a TRE.

iv. **Accelerated Monitoring Specifications.** If the monitoring trigger is exceeded during regular chronic toxicity testing, within 14-days of notification by the laboratory of the test results, the Discharger shall initiate accelerated monitoring. Accelerated monitoring shall consist of four (4) chronic toxicity tests in a six-week period (i.e. one test every two weeks) using the species that exhibited toxicity. The following protocol shall be used for accelerated monitoring and TRE initiation:

a) If the results of four (4) consecutive accelerated monitoring tests do not exceed the monitoring trigger, the Discharger may cease accelerated monitoring and resume regular chronic toxicity monitoring. However, notwithstanding the accelerated monitoring results, if there is adequate evidence of a pattern of effluent toxicity, the Executive Officer may require that the Discharger initiate a TRE.

b) If the source(s) of the toxicity is easily identified (i.e. temporary plant upset), the Discharger shall make necessary corrections to the Facility and shall continue accelerated monitoring until four (4) consecutive accelerated tests do not exceed the monitoring trigger. Upon confirmation that the effluent toxicity has been removed, the Discharger may cease accelerated monitoring and resume regular chronic toxicity monitoring.

c) If the result of any accelerated toxicity test exceeds the monitoring trigger, the Discharger shall cease accelerated monitoring and initiate a TRE to investigate the cause(s) of, and identify corrective actions to reduce or eliminate effluent toxicity. Within thirty (30) days of notification by the laboratory of the test results exceeding the monitoring trigger during accelerated monitoring, the Discharger shall submit a TRE Action Plan to the Regional Water Board including, at minimum:

1) Specific actions the Discharger will take to investigate and identify the cause(s) of toxicity, including TRE WET monitoring schedule;

2) Specific actions the Discharger will take to mitigate the impact of the discharge and prevent the recurrence of toxicity; and

3) A schedule for these actions.

b. **BPTC Evaluation Tasks**. The Discharger shall propose a work plan and schedule for providing BPTC as required by Resolution No. 68-16. The technical report describing the work plan and schedule shall contain a preliminary evaluation of each component and propose a time schedule for completing the comprehensive technical evaluation.

Following completion of the comprehensive technical evaluation, the Discharger shall submit a technical report describing the evaluation's results and critiquing each evaluated component with respect to BPTC and minimizing the discharge's impact on groundwater quality. Where deficiencies are documented, the technical report shall provide recommendations for necessary modifications (*e.g.*, new or revised salinity source control measures, wastewater treatment plant component upgrade and retrofit) to achieve BPTC and identify the source of funding and proposed schedule for modifications. The schedule shall be as short as practicable but in no case shall completion of the necessary modifications exceed four years past the Executive Officer's determination of the adequacy of the comprehensive technical evaluation, unless the schedule is reviewed and specifically approved by the Regional Water Board. The technical report shall include specific methods the Discharger proposes as a means to measure processes and assure continuous optimal performance of BPTC measures. The Discharger shall comply with the following compliance schedule in implementing the work required by this Provision:

Task	Compliance Date
1 - Submit technical report: work plan and schedule for comprehensive evaluation	**Within 6 months** following Order adoption
2 - Commence comprehensive evaluation	**30 days** following Executive Officer approval of Task 1.
3 - Complete comprehensive evaluation	As established by Task 1 and/or 2 years following Task 2, whichever is sooner
4 - Submit technical report: comprehensive evaluation results	**60 days** following completion of Task 3.
5 - Submit annual report describing the overall status of BPTC implementation and compliance with groundwater limitations over the past reporting year	To be submitted in accordance with the MRP (Attachment E, Section X.D.1.)

c. **Groundwater Monitoring.** To determine compliance with Groundwater Limitations V.B., the groundwater monitoring network shall include one or more background monitoring wells and a sufficient number of designated monitoring wells downgradient of every treatment, storage, and disposal unit that does or may release waste constituents to groundwater. All monitoring wells shall comply with the appropriate standards as described in California Well Standards Bulletin 74-90 (June 1991) and Water Well Standards: State of California Bulletin

74-81 (December 1981), and any more stringent standards adopted by the Discharger or County pursuant to CWC section 13801.

The Discharger, after each calendar year of monitoring and for each groundwater monitoring parameter/constituent identified in the Monitoring and Reporting Program (Attachment E, Section VIII.B.), **shall** provide a report presenting a summary of monitoring data, calculation of the concentration in background monitoring wells, and a comparison of background groundwater quality to that in wells used to monitor the Facility. Determination of background quality shall be made using the methods described in Title 27 California Code of Regulations Section 20415(e)(10), and shall be based on data from at least four consecutive quarterly (or more frequent) groundwater monitoring events. For each monitoring parameter/constituent, the report shall compare measured concentrations for compliance monitoring wells with the calculated background concentration.

If the monitoring shows that any constituent concentrations are increased above background water quality, the Discharger shall 1) evaluate the groundwater report results; 2) assess each Facility component with respect to BPTC, and 3) provide actions that will be taken for minimizing the Facility's impact on groundwater quality. In no case shall the discharge be allowed to exceed the Groundwater Limitations. This Order may be reopened and additional groundwater limitations added.

3. Best Management Practices and Pollution Prevention

a. Pollutant Minimization Program. The Discharger shall develop and conduct a Pollutant Minimization Program (PMP) as further described below when there is evidence (e.g., sample results reported as DNQ when the effluent limitation is less than the MDL, sample results from analytical methods more sensitive than those methods required by this Order, presence of whole effluent toxicity, health advisories for fish consumption, results of benthic or aquatic organism tissue sampling) that a priority pollutant is present in the effluent above an effluent limitation and either: 1) A sample result is reported as DNQ and the effluent limitation is less than the RL; or 2) A sample result is reported as ND and the effluent limitation is less than the MDL, using definitions described in Attachment A and reporting protocols described in MRP section X.A.5.

The PMP shall include, but not be limited to, the following actions and submittals acceptable to the Regional Water Board:

i. An annual review and semi-annual monitoring of potential sources of the reportable priority pollutant(s), which may include fish tissue monitoring and other bio-uptake sampling;

ii. Quarterly monitoring for the reportable priority pollutant(s) in the influent to the wastewater treatment system;

iii. Submittal of a control strategy designed to proceed toward the goal of maintaining concentrations of the reportable priority pollutant(s) in the effluent at or below the effluent limitation;

iv. Implementation of appropriate cost-effective control measures for the reportable priority pollutant(s), consistent with the control strategy; and

v. An annual status report that shall be sent to the Regional Water Board including:

(1) All PMP monitoring results for the previous year;

(2) A list of potential sources of the reportable priority pollutant(s);

(3) A summary of all actions undertaken pursuant to the control strategy; and

(4) A description of actions to be taken in the following year.

b. Salinity Evaluation and Minimization Plan. The Discharger shall prepare and implement a salinity evaluation and minimization plan to address sources of salinity from the municipal wastewater treatment system. The plan shall be completed and submitted to the Regional Water Board **within 9 months of the effective date of this Order for approval by the Executive Officer**.

c. Salinity Reduction Goal. The Discharger shall provide annual reports demonstrating reasonable progress in the reduction of salinity in its discharge to the unnamed tributary to Smuthers Ravine. Based on effluent data for this Facility, the Regional Water Board finds that a average monthly salinity effluent limitation of 993 µmhos/cm as electrical conductivity (EC) is a reasonable performance-based limitation that can be immediately achieved upon the effective date of this Order. The annual reports shall be submitted in accordance with the Monitoring and Reporting Program (Attachment E, Section X.D.1.).

4. Construction, Operation and Maintenance Specifications

a. Until full compliance with Waste Discharge Requirements Order No. R5-2007-0130, Final Effluent Limitations (Section IV.A.2) is achieved, the Discharger shall operate the treatment plant in a nitrification mode to the maximum extent practicable.

b. **Treatment Pond and Storage Reservoir Operating Requirements**

i. The treatment facilities shall be designed, constructed, operated, and maintained to prevent inundation or washout due to floods with a 100-year return frequency.

ii. Public contact with wastewater shall be precluded through such means as fences, signs, and other acceptable alternatives.

iii. Ponds and the storage reservoir shall be managed to prevent breeding of mosquitoes. In particular,

a) An erosion control program should assure that small coves and irregularities are not created around the perimeter of the water surface.
b) Weeds shall be minimized.
c) Dead algae, vegetation, and debris shall not accumulate on the water surface.

iv. Freeboard shall never be less than 2 feet (measured vertically to the lowest point of overflow.

v. Ponds and the storage reservoir shall have sufficient capacity to accommodate allowable wastewater flow and design seasonal precipitation and ancillary inflow and infiltration during the winter season. Design seasonal precipitation shall be based on total annual precipitation using a return period of 100 years, distributed monthly in accordance with historical rainfall patterns. .

vi. Objectionable odors originating at this Facility shall not be perceivable beyond the limits of the wastewater treatment and disposal areas.

vii. The dissolved oxygen content in the upper zone (1 foot) of wastewater in ponds and the storage reservoir shall not be less than 1.0 mg/L.

5. Special Provisions for Municipal Facilities (POTWs Only)

a. **Pretreatment Requirements.** Not Applicable.

b. **Sludge/Biosolids Discharge Specifications**

i. Collected screenings, residual sludge, biosolids, and other solids removed from liquid wastes shall be disposed of in a manner approved by the Executive Officer, and consistent with *Consolidated Regulations for Treatment, Storage, Processing, or Disposal of Solid Waste,* as set forth in Title 27, CCR, Division 2, Subdivision 1, section 20005, et seq. Removal for further treatment, disposal, or reuse at sites (i.e., landfill, composting sites, soil amendment sites) that are operated in accordance with valid waste discharge requirements issued by a regional water quality control board will satisfy these specifications.

ii. Sludge and solid waste shall be removed from screens, sumps, ponds, clarifiers, etc. as needed to ensure optimal plant performance.

iii. The treatment of sludge generated at the Facility shall be confined to the Facility property and conducted in a manner that precludes infiltration of waste constituents into soils in a mass or concentration that will violate Groundwater Limitations V.B. In addition, the storage of residual sludge, solid waste, and biosolids on Facility property shall be temporary and controlled, and contained in a manner that minimizes leachate formation and precludes

infiltration of waste constituents into soils in a mass or concentration that will violate Groundwater Limitations V.B.

iv. The use and disposal of biosolids shall comply with existing Federal and State laws and regulations, including permitting requirements and technical standards included in 40 CFR 503. If the State Water Board and the Regional Water Board are given the authority to implement regulations contained in 40 CFR 503, this Order may be reopened to incorporate appropriate time schedules and technical standards. The Discharger must comply with the standards and time schedules contained in 40 CFR 503 whether or not they have been incorporated into this Order.

c. **Biosolids Disposal Requirements**

i. The Discharger shall comply with the Monitoring and Reporting Program for biosolids disposal contained in Attachment E.

ii. Any proposed change in biosolids use or disposal practice from a previously approved practice shall be reported to the Executive Officer and U.S. EPA Regional Administrator at least **90 days** in advance of the change.

iii. The Discharger is encouraged to comply with the “Manual of Good Practice for Agricultural Land Application of Biosolids” developed by the California Water Environment Association.

d. **Biosolids Storage Requirements**

i. Facilities for the storage of Class B biosolids shall be located, designed and maintained to restrict public access to biosolids.

ii. Biosolids storage facilities shall be designed and maintained to prevent washout or inundation from a storm or flood with a return frequency of 100 years.

iii. Biosolids storage facilities, which contain biosolids, shall be designed and maintained to contain all storm water falling on the biosolids storage area during a rainfall year with a return frequency of 100 years.

iv. Biosolids storage facilities shall be designed, maintained and operated to minimize the generation of leachate.

e. **Collection System.** On 2 May 2006, the State Water Board adopted State Water Board Order 2006-0003, a Statewide General WDR for Sanitary Sewer Systems. The Discharger shall be subject to the requirements of Order 2006-0003 and any future revisions thereto. Order 2006-0003 requires that all public agencies that currently own or operate sanitary sewer systems apply for coverage under the General WDR. By 2 November 2006**,** the Discharger is required by that Order, not incorporated by reference herein, to apply for coverage under State Water Board Order 2006-0003 for operation of its wastewater collection system.

   Regardless of the coverage obtained under Order 2006-0003, the Discharger's collection system is part of the treatment system that is subject to this Order. As such, pursuant to federal regulations, the Discharger must properly operate and maintain its collection system [40 CFR section 122.41(e)], report any non-compliance [40 CFR section 122.41(l)(6) and (7)], and mitigate any discharge from the collection system in violation of this Order [40 CFR. section 122.41(d)].

f. This permit, and the Monitoring and Reporting Program which is a part of this permit, requires that certain parameters be monitored on a continuous basis. The wastewater treatment plant is not staffed on a full time basis. Permit violations or system upsets can go undetected during this period. The Discharger is required to establish an electronic system for operator notification for continuous recording device alarms. For existing continuous monitoring systems, the electronic notification system shall be installed **within 6 months of adoption** of this permit. For systems installed following permit adoption, the notification system shall be installed simultaneously.

6. Other Special Provisions

a. In the event of any change in control or ownership of land or waste discharge facilities presently owned or controlled by the Discharger, the Discharger shall notify the succeeding owner or operator of the existence of this Order by letter, a copy of which shall be immediately forwarded to the Regional Water Board.

   To assume operation under this Order, the succeeding owner or operator must apply in writing to the Executive Officer requesting transfer of the Order. The request must contain the requesting entity's full legal name, the State of incorporation if a corporation, address and telephone number of the persons responsible for contact with the Regional Water Board and a statement. The statement shall comply with the signatory and certification requirements in the Federal Standard Provisions (Attachment D, Section V.B.) and state that the new owner or operator assumes full responsibility for compliance with this Order. Failure to submit the request shall be considered a discharge without requirements, a violation of the California Water Code. Transfer shall be approved or disapproved in writing by the Executive Officer.

7. Compliance Schedules

a. Compliance Schedule for Construction and Operation of the New Wastewater Treatment Plant

i. The Discharger shall complete construction of the new wastewater treatment plant, and wastewater shall be oxidized, coagulated, filtered, and adequately disinfected pursuant to the Department of Health Services (DHS) reclamation criteria, California Code of Regulations, Title 22, Division 4, Chapter 3 (Title 22), or equivalent, by no later than **1 January 2009.**

ii. Any changes to the design specifications for the new wastewater treatment plant already approved by the DHS shall be submitted by the Discharger to the Regional Water Board prior to implementation of the change. These changes include the proposed use of "equivalent" equipment by a bidder.

iii. The Discharger shall provide the following periodic progress reports for the compliance schedule included in this Provision:

Task	Compliance Date
1 - Submit letter notifying the Regional Water Board of the Status of Funding (Grants and Loans) Commitments for Construction of the New Wastewater Treatment Plant	**Within 30 days** following Order adoption
2 - Submit letter notifying the Regional Water Board of the Selected Bidder and Construction Schedule for Construction of the New Wastewater Treatment Plant	**Within 60 days** following Order adoption
3 - Construction Progress Reports (including discussion of compliance with construction schedule)	**1 January 2008** **1 July 2008**
4 - Plan for New Wastewater Treatment Plant Testing, Optimization and Implementation of the New Wastewater Treatment System	**1 October 2008**
5 - Notification of Completion of Construction and Initiation of Operation	**1 January 2009**

b. Compliance Schedules for Final Effluent Limitations for Ammonia; Copper; and 4,4'DDE

i. **By 1 January 2009,** the Discharger shall comply with the final effluent limitations for ammonia; copper; and 4,4-DDE. On 21 February 2007, the Discharger submitted a compliance schedule justification for ammonia and 4,4-DDE. On 1 October 2007, the Discharger submitted a compliance schedule justification for copper. The compliance schedule justifications

included all items specified in Paragraph 3, items (a) through (d), of section 2.1 of the SIP.

As this compliance schedule is greater than 1 year, the Discharger shall submit semi-annual progress reports in accordance with the Monitoring and Reporting Program (Attachment E, Section X.D.1.)

ii. **Corrective Action Plan/Implementation Schedule.** The Discharger shall submit to the Regional Water Board a corrective action plan and implementation schedule to assure compliance with the final effluent limitations for ammonia; copper; and 4,4-DDE **within 6 months of the effective date of this Order**.

iii. **Pollution Prevention Plan.** The Discharger shall prepare and implement a pollution prevention plan for ammonia; copper; and 4,4-DDE in accordance with CWC section 13263.3(d)(3) **within 6 months of the effective date of this Order**. The minimum requirements for the pollution prevention plan are outlined in the Fact Sheet, Attachment F, subsection VII.B.7.d.

c. The Discharger shall submit to the Regional Water Board on or before each compliance date specified in Sections VI.C.7.a and VI.C.7.b above, the specified document or, if appropriate, a written report detailing compliance or noncompliance with the specific schedule date and task. If noncompliance is being reported, the reasons for such noncompliance shall be stated, and shall include an estimate of the date when the Discharger will be in compliance. The Discharger shall notify the Regional Water Board by letter when it returns to compliance with the time schedule.

VII. COMPLIANCE DETERMINATION

A. **Aluminum Effluent Limitations**. Compliance with the final effluent limitations for aluminum can be demonstrated using either total or acid-soluble (inductively coupled plasma/atomic emission spectrometry or inductively coupled plasma/mass spectrometry) analysis methods, as supported by USEPA's Ambient Water Quality Criteria for Aluminum document (EPA 440/5-86-008), or other standard methods that exclude aluminum silicate particles as approved by the Executive Officer.

B. **Total Coliform Organisms Effluent Limitations (Sections IV.A.1.k. and IV.A.2.k.)**. For each day that an effluent sample is collected and analyzed for total coliform organisms, the 7-day median shall be determined by calculating the median concentration of total coliform bacteria in the effluent utilizing the bacteriological results of the last seven days for which analyses have been completed. If the 7-day median of total coliform organisms exceeds a most probable number (MPN) of 2.2 per 100 milliliters, the Discharger will be considered out of compliance for that parameter for that 1 day only within the reporting period.

C. **Average Dry Weather Flow Effluent Limitations (Sections IV.A.1.j.and IV.A.2.j.)**. The Average Dry Weather Flow represents the daily average flow when groundwater is

at or near normal and runoff is not occurring. Compliance with the Average Dry Weather Flow effluent limitations will be determined annually based on the average daily flow over three consecutive dry weather months (e.g. July, August, and September).

D. **Total Residual Chlorine Effluent Limitations.** Continuous monitoring analyzers for chlorine residual or for dechlorination agent residual in the effluent are appropriate methods for compliance determination. A positive residual dechlorination agent in the effluent indicates that chlorine is not present in the discharge, which demonstrates compliance with the effluent limitations. This type of monitoring can also be used to prove that some chlorine residual exceedances are false positives. Continuous monitoring data showing either a positive dechlorination agent residual or a chlorine residual at or below the prescribed limit are sufficient to show compliance with the total residual chlorine effluent limitations, as long as the instruments are maintained and calibrated in accordance with the manufacturer's recommendations.

Any excursion above the 1-hour average or 4-day average total residual chlorine effluent limitations is a violation. If the Discharger conducts continuous monitoring and the Discharger can demonstrate, through data collected from a back-up monitoring system, that a chlorine spike recorded by the continuous monitor was not actually due to chlorine, then any excursion resulting from the recorded spike will not be considered an exceedance, but rather reported as a false positive.

E. **Total Mercury Mass Loading Effluent Limitations.** The procedures for calculating mass loadings are as follows:

1. The total pollutant mass load for each individual calendar month shall be determined using an average of all concentration data collected that month and the corresponding total monthly flow. All monitoring data collected under the monitoring and reporting program, pretreatment program and any special studies shall be used for these calculations.
2. In calculating compliance, the Discharger shall count all non-detect measures at one-half of the detection level. If compliance with the effluent limitation is not attained due to the non-detect contribution, the Discharger shall improve and implement available analytical capabilities and compliance shall be evaluated with consideration of the detection limits.

F. **Persistent Chlorinated Hydrocarbon Pesticides Instantaneous Maximum Effluent Limitation.** The non-detectable (ND) instantaneous maximum effluent limitation for organo chlorine pesticides applies to each individual pesticide. No individual pesticide may be present in the discharge at detectable concentrations. The Discharger shall use USEPA standard analytical techniques with the lowest possible detectable level for persistent chlorinated hydrocarbon pesticides with a maximum acceptable detection level of 0.05 µg/L. If the analytical result of a single effluent grab sample is detected for any persistent chlorinated hydrocarbonpesticide, a violation will be flagged and the discharger will be considered out of compliance for that single sample. Non-compliance for each sample will be considered separately (*e.g.*, the results of two grab samples

taken within a calendar day that both exceed the instantaneous maximum effluent limitation would result in two instances of non-compliance with the instantaneous maximum effluent limitation).

ATTACHMENT A – DEFINITIONS

Arithmetic Mean (μ), also called the average, is the sum of measured values divided by the number of samples. For ambient water concentrations, the arithmetic mean is calculated as follows:

Arithmetic mean = $\mu = \Sigma x / n$ where: Σx is the sum of the measured ambient water concentrations, and n is the number of samples.

Average Monthly Effluent Limitation (AMEL): the highest allowable average of daily discharges over a calendar month, calculated as the sum of all daily discharges measured during a calendar month divided by the number of daily discharges measured during that month.

Average Weekly Effluent Limitation (AWEL): the highest allowable average of daily discharges over a calendar week (Sunday through Saturday), calculated as the sum of all daily discharges measured during a calendar week divided by the number of daily discharges measured during that week.

Best Practicable Treatment or Control (BPTC): BPTC is a requirement of State Water Resources Control Board Resolution No. 68-16 – "Statement of Policy with Respect to Maintaining High Quality of Waters in California" (referred to as the "Antidegradation Policy"). BPTC is the treatment or control of a discharge necessary to assure that, *"(a) a pollution or nuisance will not occur and (b) the highest water quality consistent with maximum benefit to the people of the State will be maintained."* Pollution is defined in CWC Section 13050(l). In general, an exceedance of a water quality objective in the Basin Plan constitutes "pollution".

Bioaccumulative pollutants are those substances taken up by an organism from its surrounding medium through gill membranes, epithelial tissue, or from food and subsequently concentrated and retained in the body of the organism.

Carcinogenic pollutants are substances that are known to cause cancer in living organisms.

Coefficient of Variation (*CV*) is a measure of the data variability and is calculated as the estimated standard deviation divided by the arithmetic mean of the observed values.

Daily Discharge: Daily Discharge is defined as either: (1) the total mass of the constituent discharged over the calendar day (12:00 am through 11:59 pm) or any 24-hour period that reasonably represents a calendar day for purposes of sampling (as specified in the permit), for a constituent with limitations expressed in units of mass or; (2) the unweighted arithmetic mean measurement of the constituent over the day for a constituent with limitations expressed in other units of measurement (e.g., concentration).

The daily discharge may be determined by the analytical results of a composite sample taken over the course of one day (a calendar day or other 24-hour period defined as a day) or by the

arithmetic mean of analytical results from one or more grab samples taken over the course of the day.

For composite sampling, if 1 day is defined as a 24-hour period other than a calendar day, the analytical result for the 24-hour period will be considered as the result for the calendar day in which the 24-hour period ends.

Detected, but Not Quantified (DNQ) are those sample results less than the RL, but greater than or equal to the laboratory's MDL.

Dilution Credit is the amount of dilution granted to a discharge in the calculation of a water quality-based effluent limitation, based on the allowance of a specified mixing zone. It is calculated from the dilution ratio or determined through conducting a mixing zone study or modeling of the discharge and receiving water.

Effluent Concentration Allowance (ECA) is a value derived from the water quality criterion/objective, dilution credit, and ambient background concentration that is used, in conjunction with the coefficient of variation for the effluent monitoring data, to calculate a long-term average (LTA) discharge concentration. The ECA has the same meaning as waste load allocation (WLA) as used in U.S. EPA guidance (Technical Support Document For Water Quality-based Toxics Control, March 1991, second printing, EPA/505/2-90-001).

Enclosed Bays means indentations along the coast that enclose an area of oceanic water within distinct headlands or harbor works. Enclosed bays include all bays where the narrowest distance between the headlands or outermost harbor works is less than 75 percent of the greatest dimension of the enclosed portion of the bay. Enclosed bays include, but are not limited to, Humboldt Bay, Bodega Harbor, Tomales Bay, Drake's Estero, San Francisco Bay, Morro Bay, Los Angeles-Long Beach Harbor, Upper and Lower Newport Bay, Mission Bay, and San Diego Bay. Enclosed bays do not include inland surface waters or ocean waters.

Estimated Chemical Concentration is the estimated chemical concentration that results from the confirmed detection of the substance by the analytical method below the ML value.

Estuaries means waters, including coastal lagoons, located at the mouths of streams that serve as areas of mixing for fresh and ocean waters. Coastal lagoons and mouths of streams that are temporarily separated from the ocean by sandbars shall be considered estuaries. Estuarine waters shall be considered to extend from a bay or the open ocean to a point upstream where there is no significant mixing of fresh water and seawater. Estuarine waters include~~d~~, but are not limited to, the Sacramento-San Joaquin Delta, as defined in Water Code section 12220, Suisun Bay, Carquinez Strait downstream to the Carquinez Bridge, and appropriate areas of the Smith, Mad, Eel, Noyo, Russian, Klamath, San Diego, and Otay rivers. Estuaries do not include inland surface waters or ocean waters.

Inland Surface Waters are all surface waters of the State that do not include the ocean, enclosed bays, or estuaries.

Instantaneous Maximum Effluent Limitation: the highest allowable value for any single grab sample or aliquot (i.e., each grab sample or aliquot is independently compared to the instantaneous maximum limitation).

Instantaneous Minimum Effluent Limitation: the lowest allowable value for any single grab sample or aliquot (i.e., each grab sample or aliquot is independently compared to the instantaneous minimum limitation).

Maximum Daily Effluent Limitation (MDEL) means the highest allowable daily discharge of a pollutant, over a calendar day (or 24-hour period). For pollutants with limitations expressed in units of mass, the daily discharge is calculated as the total mass of the pollutant discharged over the day. For pollutants with limitations expressed in other units of measurement, the daily discharge is calculated as the arithmetic mean measurement of the pollutant over the day.

Median is the middle measurement in a set of data. The median of a set of data is found by first arranging the measurements in order of magnitude (either increasing or decreasing order). If the number of measurements (n) is odd, then the median = $X_{(n+1)/2}$. If n is even, then the median = $(X_{n/2} + X_{(n/2)+1})/2$ (i.e., the midpoint between the $n/2$ and $n/2+1$).

Method Detection Limit (MDL) is the minimum concentration of a substance that can be measured and reported with 99 percent confidence that the analyte concentration is greater than zero, as defined in title 40 of the Code of Federal Regulations, Part 136, Attachment B, revised as of 3 July 1999.

Minimum Level (ML) is the concentration at which the entire analytical system must give a recognizable signal and acceptable calibration point. The ML is the concentration in a sample that is equivalent to the concentration of the lowest calibration standard analyzed by a specific analytical procedure, assuming that all the method specified sample weights, volumes, and processing steps have been followed.

Mixing Zone is a limited volume of receiving water that is allocated for mixing with a wastewater discharge where water quality criteria can be exceeded without causing adverse effects to the overall water body.

Not Detected (ND) are those sample results less than the laboratory's MDL.

Ocean Waters are the territorial marine waters of the State as defined by California law to the extent these waters are outside of enclosed bays, estuaries, and coastal lagoons. Discharges to ocean waters are regulated in accordance with the State Water Board's California Ocean Plan.

Persistent pollutants are substances for which degradation or decomposition in the environment is nonexistent or very slow.

Pollutant Minimization Program (PMP) means waste minimization and pollution prevention actions that include, but are not limited to, product substitution, waste stream recycling, alternative waste management methods, and education of the public and businesses. The

goal of the PMP shall be to reduce all potential sources of a priority pollutant(s) through pollutant minimization (control) strategies, including pollution prevention measures as appropriate, to maintain the effluent concentration at or below the water quality-based effluent limitation. Pollution prevention measures may be particularly appropriate for persistent bioaccumulative priority pollutants where there is evidence that beneficial uses are being impacted. The Regional Water Board may consider cost effectiveness when establishing the requirements of a PMP. The completion and implementation of a Pollution Prevention Plan, if required pursuant to Water Code section 13263.3(d), shall be considered to fulfill the PMP requirements.

Pollution Prevention means any action that causes a net reduction in the use or generation of a hazardous substance or other pollutant that is discharged into water and includes, but is not limited to, input change, operational improvement, production process change, and product reformulation (as defined in Water Code section 13263.3). Pollution prevention does not include actions that merely shift a pollutant in wastewater from one environmental medium to another environmental medium, unless clear environmental benefits of such an approach are identified to the satisfaction of the State or Regional Water Board.

Reporting Level (RL) is the ML (and its associated analytical method) chosen by the Discharger for reporting and compliance determination from the MLs included in this Order. The MLs included in this Order correspond to approved analytical methods for reporting a sample result that are selected by the Regional Water Board either from Appendix 4 of the SIP in accordance with section 2.4.2 of the SIP or established in accordance with section 2.4.3 of the SIP. The ML is based on the proper application of method-based analytical procedures for sample preparation and the absence of any matrix interferences. Other factors may be applied to the ML depending on the specific sample preparation steps employed. For example, the treatment typically applied in cases where there are matrix-effects is to dilute the sample or sample aliquot by a factor of ten. In such cases, this additional factor must be applied to the ML in the computation of the RL.

Satellite Collection System is the portion, if any, of a sanitary sewer system owned or operated by a different public agency than the agency that owns and operates the wastewater treatment facility that a sanitary sewer system is tributary to.

Source of Drinking Water is any water designated as municipal or domestic supply (MUN) in a Regional Water Board Basin Plan.

Standard Deviation (σ) is a measure of variability that is calculated as follows:

$$\sigma = \left(\sum[(x - \mu)^2]/(n - 1)\right)^{0.5}$$

where:

x is the observed value;
μ is the arithmetic mean of the observed values; and
n is the number of samples.

Toxicity Reduction Evaluation (TRE) is a study conducted in a step-wise process designed to identify the causative agents of effluent or ambient toxicity, isolate the sources of toxicity,

evaluate the effectiveness of toxicity control options, and then confirm the reduction in toxicity. The first steps of the TRE consist of the collection of data relevant to the toxicity, including additional toxicity testing, and an evaluation of facility operations and maintenance practices, and best management practices. A Toxicity Identification Evaluation (TIE) may be required as part of the TRE, if appropriate. (A TIE is a set of procedures to identify the specific chemical(s) responsible for toxicity. These procedures are performed in three phases (characterization, identification, and confirmation) using aquatic organism toxicity tests.)

ATTACHMENT B – MAP

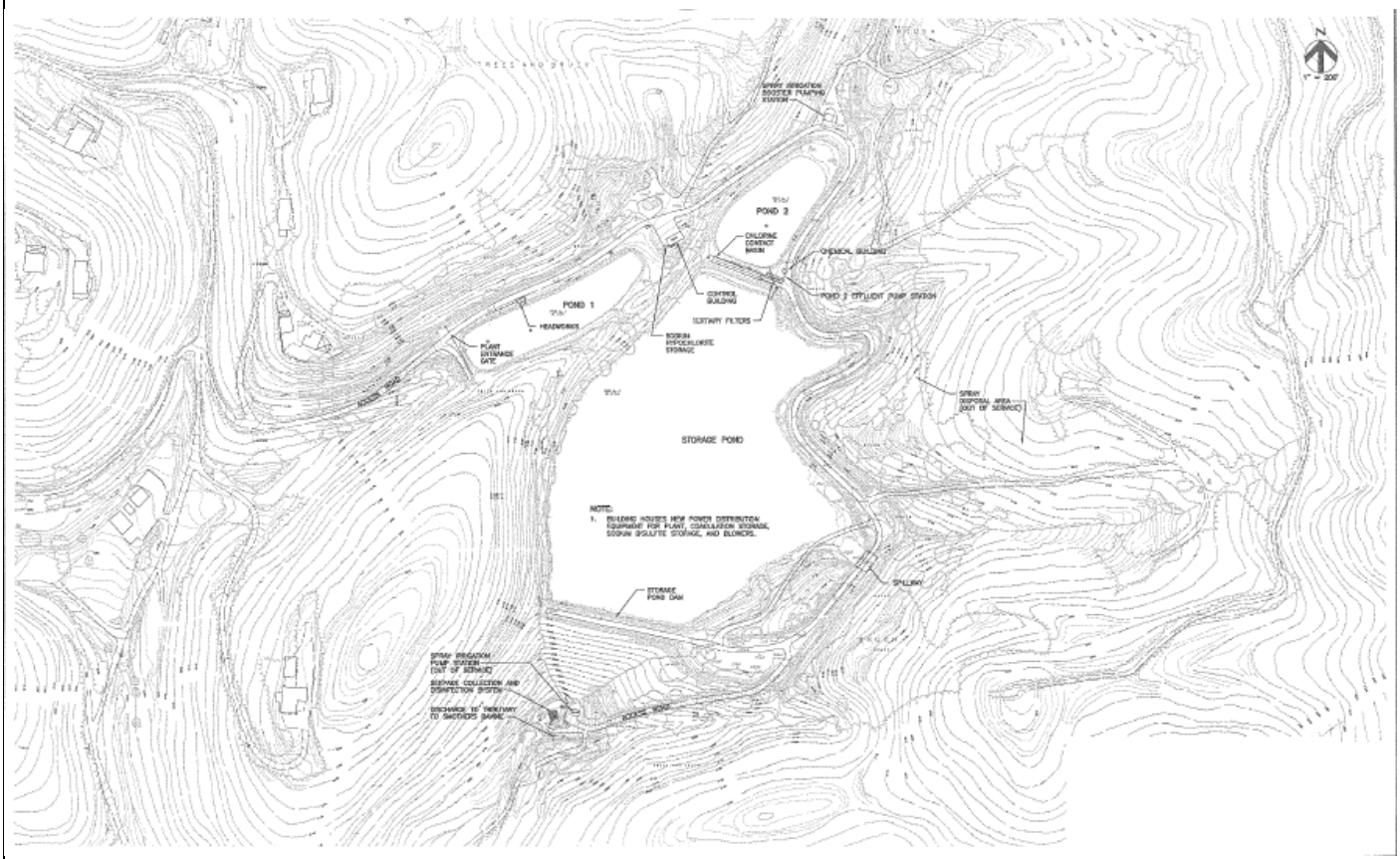

Drawing Reference: **COLFAX** U.S.G.S TOPOGRAPHIC MAP 7.5 MINUTE QUADRANGLE *Photorevised 1973* *Not to scale*	SITE LOCATION MAP CITY OF COLFAX WASTEWATER TREATMENT PLANT PLACER COUNTY	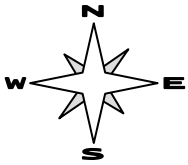

ATTACHMENT C – FLOW SCHEMATIC

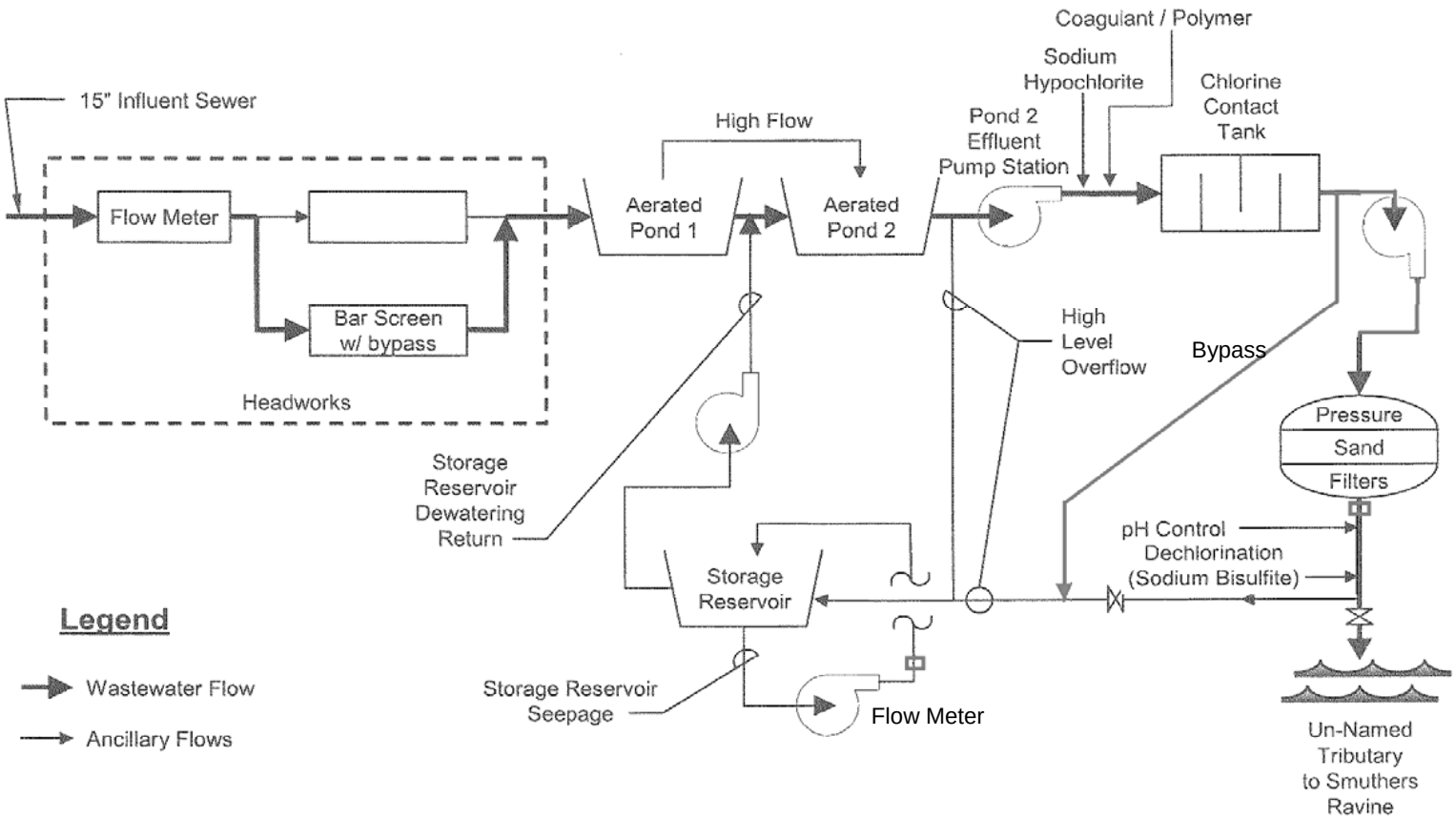

Notes:

1. Comminutor not functional.

Existing Interim Tertiary Wastewater Treatment Plant

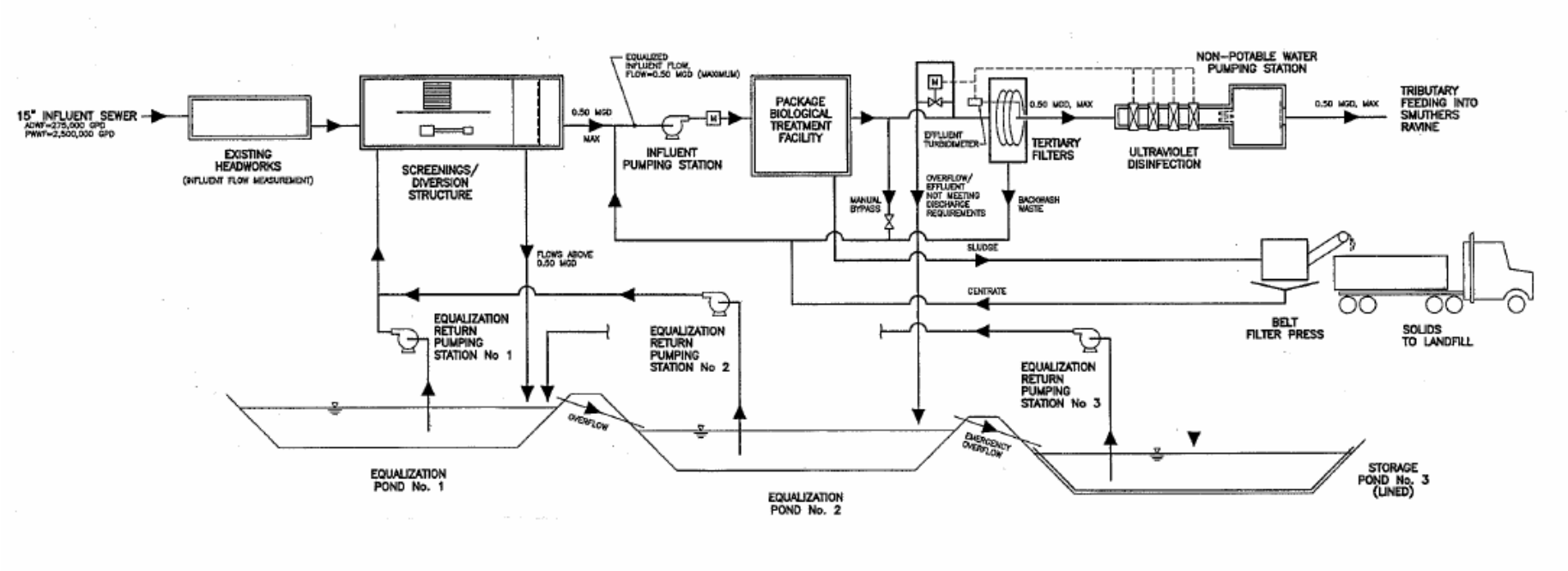

Proposed New Tertiary Wastewater Treatment Plant

ATTACHMENT D –STANDARD PROVISIONS

I. STANDARD PROVISIONS – PERMIT COMPLIANCE

A. Duty to Comply

1. The Discharger must comply with all of the conditions of this Order. Any noncompliance constitutes a violation of the Clean Water Act (CWA) and the California Water Code and is grounds for enforcement action, for permit termination, revocation and reissuance, or modification; or denial of a permit renewal application. (40 CFR § 122.41(a).)

2. The Discharger shall comply with effluent standards or prohibitions established under Section 307(a) of the CWA for toxic pollutants and with standards for sewage sludge use or disposal established under Section 405(d) of the CWA within the time provided in the regulations that establish these standards or prohibitions, even if this Order has not yet been modified to incorporate the requirement. (40 CFR § 122.41(a)(1).)

B. Need to Halt or Reduce Activity Not a Defense

It shall not be a defense for a Discharger in an enforcement action that it would have been necessary to halt or reduce the permitted activity in order to maintain compliance with the conditions of this Order. (40 CFR § 122.41(c).)

C. Duty to Mitigate

The Discharger shall take all reasonable steps to minimize or prevent any discharge or sludge use or disposal in violation of this Order that has a reasonable likelihood of adversely affecting human health or the environment. (40 CFR § 122.41(d).)

D. Proper Operation and Maintenance

1. The Discharger shall at all times properly operate and maintain all facilities and systems of treatment and control (and related appurtenances) which are installed or used by the Discharger to achieve compliance with the conditions of this Order. Proper operation and maintenance also includes adequate laboratory controls and appropriate quality assurance procedures. This provision requires the operation of backup or auxiliary facilities or similar systems that are installed by a Discharger only when necessary to achieve compliance with the conditions of this Order. (40 CFR § 122.41(e).)

2. **Ultraviolet Disinfection (UV) System Operating Requirements.**

   Once in operation the Discharger shall operate the UV disinfection system to provide a minimum UV dose per bank of 100 millijoules per square centimeter (mJ/cm^2) at

peak daily flow while discharging to the receiving water, unless otherwise approved by the California Department of Health Services.

a. The Discharger shall provide continuous, reliable monitoring of flow, UV transmittance, UV power, and turbidity.

b. The UV transmittance (at 254 nanometers) in the wastewater exiting the UV disinfection system shall not fall below 55 percent of maximum at any time.

c. The quartz sleeves and cleaning system components must be visually inspected every 3 months for physical wear (scoring, solarization, seal leaks, cleaning fluid levels, etc.) and to check the efficacy of the cleaning system.

d. The lamp sleeves must be cleaned periodically as necessary to meet the requirements specified in paragraph iv. The lamp cleaning fluid must be replaced every six months.

e. Lamps must be replaced after they have reached 5000 hours of operation, or sooner if there are indications the lamp is failing to provide adequate disinfection. Lamp age and lamp replacement records must be maintained.

f. The facility must be operated in accordance with an operations and maintenance manual approved by the Regional Water Board and DHS.

E. Property Rights

1. This Order does not convey any property rights of any sort or any exclusive privileges. (40 CFR § 122.41(g).)

2. The issuance of this Order does not authorize any injury to persons or property or invasion of other private rights, or any infringement of state or local law or regulations. (40 CFR § 122.5(c).)

F. Inspection and Entry

The Discharger shall allow the Regional Water Board, State Water Board, United States Environmental Protection Agency (USEPA), and/or their authorized representatives (including an authorized contractor acting as their representative), upon the presentation of credentials and other documents, as may be required by law, to (40 CFR § 122.41(i); Wat. Code, § 13383):

1. Enter upon the Discharger's premises where a regulated facility or activity is located or conducted, or where records are kept under the conditions of this Order (40 CFR § 122.41(i)(1));

2. Have access to and copy, at reasonable times, any records that must be kept under the conditions of this Order (40 CFR § 122.41(i)(2));

3. Inspect and photograph, at reasonable times, any facilities, equipment (including monitoring and control equipment), practices, or operations regulated or required under this Order (40 CFR § 122.41(i)(3)); and

4. Sample or monitor, at reasonable times, for the purposes of assuring Order compliance or as otherwise authorized by the CWA or the Water Code, any substances or parameters at any location. (40 CFR § 122.41(i)(4).)

G. Bypass

1. Definitions

   a. "Bypass" means the intentional diversion of waste streams from any portion of a treatment facility. (40 CFR § 122.41(m)(1)(i).)

   b. "Severe property damage" means substantial physical damage to property, damage to the treatment facilities, which causes them to become inoperable, or substantial and permanent loss of natural resources that can reasonably be expected to occur in the absence of a bypass. Severe property damage does not mean economic loss caused by delays in production. (40 CFR § 122.41(m)(1)(ii).)

2. Bypass not exceeding limitations. The Discharger may allow any bypass to occur which does not cause exceedances of effluent limitations, but only if it is for essential maintenance to assure efficient operation. These bypasses are not subject to the provisions listed in Standard Provisions – Permit Compliance I.G.3, I.G.4, and I.G.5 below. (40 CFR § 122.41(m)(2).)

3. Prohibition of bypass. Bypass is prohibited, and the Regional Water Board may take enforcement action against a Discharger for bypass, unless (40 CFR § 122.41(m)(4)(i)):

   a. Bypass was unavoidable to prevent loss of life, personal injury, or severe property damage (40 CFR § 122.41(m)(4)(i)(A));

   b. There were no feasible alternatives to the bypass, such as the use of auxiliary treatment facilities, retention of untreated wastes, or maintenance during normal periods of equipment downtime. This condition is not satisfied if adequate back-up equipment should have been installed in the exercise of reasonable engineering judgment to prevent a bypass that occurred during normal periods of equipment downtime or preventive maintenance (40 CFR § 122.41(m)(4)(i)(B)); and

   c. The Discharger submitted notice to the Regional Water Board as required under Standard Provisions – Permit Compliance I.G.5 below. (40 CFR § 122.41(m)(4)(i)(C).)

4. The Regional Water Board may approve an anticipated bypass, after considering its adverse effects, if the Regional Water Board determines that it will meet the three conditions listed in Standard Provisions – Permit Compliance I.G.3 above. (40 CFR § 122.41(m)(4)(ii).)

5. Notice

   a. Anticipated bypass. If the Discharger knows in advance of the need for a bypass, it shall submit a notice, if possible at least 10 days before the date of the bypass. (40 CFR § 122.41(m)(3)(i).)

   b. Unanticipated bypass. The Discharger shall submit notice of an unanticipated bypass as required in Standard Provisions - Reporting V.E below (24-hour notice). (40 CFR § 122.41(m)(3)(ii).)

H. Upset

Upset means an exceptional incident in which there is unintentional and temporary noncompliance with technology based permit effluent limitations because of factors beyond the reasonable control of the Discharger. An upset does not include noncompliance to the extent caused by operational error, improperly designed treatment facilities, inadequate treatment facilities, lack of preventive maintenance, or careless or improper operation. (40 CFR § 122.41(n)(1).)

1. Effect of an upset. An upset constitutes an affirmative defense to an action brought for noncompliance with such technology based permit effluent limitations if the requirements of Standard Provisions – Permit Compliance I.H.2 below are met. No determination made during administrative review of claims that noncompliance was caused by upset, and before an action for noncompliance, is final administrative action subject to judicial review. (40 CFR § 122.41(n)(2).).

2. Conditions necessary for a demonstration of upset. A Discharger who wishes to establish the affirmative defense of upset shall demonstrate, through properly signed, contemporaneous operating logs or other relevant evidence that (40 CFR § 122.41(n)(3)):

   a. An upset occurred and that the Discharger can identify the cause(s) of the upset (40 CFR § 122.41(n)(3)(i));

   b. The permitted facility was, at the time, being properly operated (40 CFR § 122.41(n)(3)(ii));

   c. The Discharger submitted notice of the upset as required in Standard Provisions – Reporting V.E.2.b below (24-hour notice) (40 CFR § 122.41(n)(3)(iii)); and

d. The Discharger complied with any remedial measures required under Standard Provisions – Permit Compliance I.C above. (40 CFR § 122.41(n)(3)(iv).)

3. Burden of proof. In any enforcement proceeding, the Discharger seeking to establish the occurrence of an upset has the burden of proof. (40 CFR § 122.41(n)(4).)

II. STANDARD PROVISIONS – PERMIT ACTION

A. General

This Order may be modified, revoked and reissued, or terminated for cause. The filing of a request by the Discharger for modification, revocation and reissuance, or termination, or a notification of planned changes or anticipated noncompliance does not stay any Order condition. (40 CFR § 122.41(f).)

B. Duty to Reapply

If the Discharger wishes to continue an activity regulated by this Order after the expiration date of this Order, the Discharger must apply for and obtain a new permit. (40 CFR § 122.41(b).)

C. Transfers

This Order is not transferable to any person except after notice to the Regional Water Board. The Regional Water Board may require modification or revocation and reissuance of the Order to change the name of the Discharger and incorporate such other requirements as may be necessary under the CWA and the Water Code. (40 CFR § 122.41(l)(3); § 122.61.)

III. STANDARD PROVISIONS – MONITORING

A. Samples and measurements taken for the purpose of monitoring shall be representative of the monitored activity. (40 CFR § 122.41(j)(1).)

B. Monitoring results must be conducted according to test procedures under Part 136 or, in the case of sludge use or disposal, approved under Part 136 unless otherwise specified in Part 503 unless other test procedures have been specified in this Order. (40 CFR § 122.41(j)(4); § 122.44(i)(1)(iv).)

IV. STANDARD PROVISIONS – RECORDS

A. Except for records of monitoring information required by this Order related to the Discharger's sewage sludge use and disposal activities, which shall be retained for a period of at least five years (or longer as required by Part 503), the Discharger shall retain records of all monitoring information, including all calibration and maintenance

records and all original strip chart recordings for continuous monitoring instrumentation, copies of all reports required by this Order, and records of all data used to complete the application for this Order, for a period of at least three (3) years from the date of the sample, measurement, report or application. This period may be extended by request of the Regional Water Board Executive Officer at any time. (40 CFR § 122.41(j)(2).)

B. Records of monitoring information shall include:

1. The date, exact place, and time of sampling or measurements (40 CFR § 122.41(j)(3)(i));

2. The individual(s) who performed the sampling or measurements (40 CFR § 122.41(j)(3)(ii));

3. The date(s) analyses were performed (40 CFR § 122.41(j)(3)(iii));

4. The individual(s) who performed the analyses (40 CFR § 122.41(j)(3)(iv));

5. The analytical techniques or methods used (40 CFR § 122.41(j)(3)(v)); and

6. The results of such analyses. (40 CFR § 122.41(j)(3)(vi).)

C. Claims of confidentiality for the following information will be denied (40 CFR § 122.7(b)):

1. The name and address of any permit applicant or Discharger (40 CFR § 122.7(b)(1)); and

2. Permit applications and attachments, permits and effluent data. (40 CFR § 122.7(b)(2).)

V. STANDARD PROVISIONS – REPORTING

A. Duty to Provide Information

The Discharger shall furnish to the Regional Water Board, State Water Board, or USEPA within a reasonable time, any information which the Regional Water Board, State Water Board, or USEPA may request to determine whether cause exists for modifying, revoking and reissuing, or terminating this Order or to determine compliance with this Order. Upon request, the Discharger shall also furnish to the Regional Water Board, State Water Board, or USEPA copies of records required to be kept by this Order. (40 CFR § 122.41(h); Wat. Code, § 13267.)

B. Signatory and Certification Requirements

1. All applications, reports, or information submitted to the Regional Water Board, State Water Board, and/or USEPA shall be signed and certified in accordance with

Standard Provisions – Reporting V.B.2, V.B.3, V.B.4, and V.B.5 below. (40 CFR § 122.41(k).)

2. All permit applications shall be signed by either a principal executive officer or ranking elected official. For purposes of this provision, a principal executive officer of a federal agency includes: (i) the chief executive officer of the agency, or (ii) a senior executive officer having responsibility for the overall operations of a principal geographic unit of the agency (e.g., Regional Administrators of USEPA). (40 CFR § 122.22(a)(3).).

3. All reports required by this Order and other information requested by the Regional Water Board, State Water Board, or USEPA shall be signed by a person described in Standard Provisions – Reporting V.B.2 above, or by a duly authorized representative of that person. A person is a duly authorized representative only if:

   a. The authorization is made in writing by a person described in Standard Provisions – Reporting V.B.2 above (40 CFR § 122.22(b)(1));

   b. The authorization specifies either an individual or a position having responsibility for the overall operation of the regulated facility or activity such as the position of plant manager, operator of a well or a well field, superintendent, position of equivalent responsibility, or an individual or position having overall responsibility for environmental matters for the company. (A duly authorized representative may thus be either a named individual or any individual occupying a named position.) (40 CFR § 122.22(b)(2)); and

   c. The written authorization is submitted to the Regional Water Board and State Water Board. (40 CFR § 122.22(b)(3).)

4. If an authorization under Standard Provisions – Reporting V.B.3 above is no longer accurate because a different individual or position has responsibility for the overall operation of the facility, a new authorization satisfying the requirements of Standard Provisions – Reporting V.B.3 above must be submitted to the Regional Water Board and State Water Board prior to or together with any reports, information, or applications, to be signed by an authorized representative. (40 CFR § 122.22(c).)

5. Any person signing a document under Standard Provisions – Reporting V.B.2 or V.B.3 above shall make the following certification:

   "I certify under penalty of law that this document and all attachments were prepared under my direction or supervision in accordance with a system designed to assure that qualified personnel properly gather and evaluate the information submitted. Based on my inquiry of the person or persons who manage the system or those persons directly responsible for gathering the information, the information submitted is, to the best of my knowledge and belief, true, accurate, and complete. I am aware that there are significant penalties for submitting false information, including the possibility of fine and imprisonment for knowing violations." (40 CFR § 122.22(d).)

C. Monitoring Reports

1. Monitoring results shall be reported at the intervals specified in the Monitoring and Reporting Program (Attachment E) in this Order. (40 CFR § 122.22(l)(4).)

2. Monitoring results must be reported on a Discharge Monitoring Report (DMR) form or forms provided or specified by the Regional Water Board or State Water Board for reporting results of monitoring of sludge use or disposal practices. (40 CFR § 122.41(l)(4)(i).)

3. If the Discharger monitors any pollutant more frequently than required by this Order using test procedures approved under Part 136 or, in the case of sludge use or disposal, approved under Part 136 unless otherwise specified in Part 503, or as specified in this Order, the results of this monitoring shall be included in the calculation and reporting of the data submitted in the DMR or sludge reporting form specified by the Regional Water Board. (40 CFR § 122.41(l)(4)(ii).)

4. Calculations for all limitations, which require averaging of measurements, shall utilize an arithmetic mean unless otherwise specified in this Order. (40 CFR § 122.41(l)(4)(iii).)

D. Compliance Schedules

Reports of compliance or noncompliance with, or any progress reports on, interim and final requirements contained in any compliance schedule of this Order, shall be submitted no later than 14 days following each schedule date. (40 CFR § 122.41(l)(5).)

E. Twenty-Four Hour Reporting

1. The Discharger shall report any noncompliance that may endanger health or the environment. Any information shall be provided orally within 24 hours from the time the Discharger becomes aware of the circumstances. A written submission shall also be provided within five (5) days of the time the Discharger becomes aware of the circumstances. The written submission shall contain a description of the noncompliance and its cause; the period of noncompliance, including exact dates and times, and if the noncompliance has not been corrected, the anticipated time it is expected to continue; and steps taken or planned to reduce, eliminate, and prevent reoccurrence of the noncompliance. (40 CFR § 122.41(l)(6)(i).)

2. The following shall be included as information that must be reported within 24 hours under this paragraph (40 CFR § 122.41(l)(6)(ii)):

   a. Any unanticipated bypass that exceeds any effluent limitation in this Order. (40 CFR § 122.41(l)(6)(ii)(A).)

b. Any upset that exceeds any effluent limitation in this Order. (40 CFR § 122.41(l)(6)(ii)(B).)

3. The Regional Water Board may waive the above-required written report under this provision on a case-by-case basis if an oral report has been received within 24 hours. (40 CFR § 122.41(l)(6)(iii).)

F. Planned Changes

The Discharger shall give notice to the Regional Water Board as soon as possible of any planned physical alterations or additions to the permitted facility. Notice is required under this provision only when (40 CFR § 122.41(l)(1)):

1. The alteration or addition to a permitted facility may meet one of the criteria for determining whether a facility is a new source in section 122.29(b) (40 CFR § 122.41(l)(1)(i)); or

2. The alteration or addition could significantly change the nature or increase the quantity of pollutants discharged. This notification applies to pollutants that are not subject to effluent limitations in this Order. (40 CFR § 122.41(l)(1)(ii).)

3. The alteration or addition results in a significant change in the Discharger's sludge use or disposal practices, and such alteration, addition, or change may justify the application of permit conditions that are different from or absent in the existing permit, including notification of additional use or disposal sites not reported during the permit application process or not reported pursuant to an approved land application plan. (40 CFR§ 122.41(l)(1)(iii).)

G. Anticipated Noncompliance

The Discharger shall give advance notice to the Regional Water Board or State Water Board of any planned changes in the permitted facility or activity that may result in noncompliance with General Order requirements. (40 CFR § 122.41(l)(2).)

H. Other Noncompliance

The Discharger shall report all instances of noncompliance not reported under Standard Provisions – Reporting V.C, V.D, and V.E above at the time monitoring reports are submitted. The reports shall contain the information listed in Standard Provision – Reporting V.E above. (40 CFR § 122.41(l)(7).)

I. Other Information

When the Discharger becomes aware that it failed to submit any relevant facts in a permit application, or submitted incorrect information in a permit application or in any report to the Regional Water Board, State Water Board, or USEPA, the Discharger shall promptly submit such facts or information. (40 CFR § 122.41(l)(8).)

VI. STANDARD PROVISIONS – ENFORCEMENT

A. The Regional Water Board is authorized to enforce the terms of this permit under several provisions of the Water Code, including, but not limited to, sections 13385, 13386, and 13387.

VII. ADDITIONAL PROVISIONS – NOTIFICATION LEVELS

A. Publicly-Owned Treatment Works (POTWs)

All POTWs shall provide adequate notice to the Regional Water Board of the following (40 CFR § 122.42(b)):

1. Any new introduction of pollutants into the POTW from an indirect discharger that would be subject to sections 301 or 306 of the CWA if it were directly discharging those pollutants (40 CFR § 122.42(b)(1)); and

2. Any substantial change in the volume or character of pollutants being introduced into that POTW by a source introducing pollutants into the POTW at the time of adoption of the Order. (40 CFR § 122.42(b)(2).)

3. Adequate notice shall include information on the quality and quantity of effluent introduced into the POTW as well as any anticipated impact of the change on the quantity or quality of effluent to be discharged from the POTW. (40 CFR § 122.42(b)(3).)

ATTACHMENT E – MONITORING AND REPORTING PROGRAM

Table of Contents

Attachment E – Monitoring and Reporting Program (MRP) E-1
I. General Monitoring Provisions E-1
II. Monitoring Locations E-2
III. Influent Monitoring Requirements E-2
A. Monitoring Location INF-001 ..... E-2
IV. Effluent Monitoring Requirements E-3
A. Monitoring Location EFF-001 ..... E-3
V. Whole Effluent Toxicity Testing Requirements E-5
VI. Land Discharge Monitoring Requirements E-7
VII. Reclamation Monitoring Requirements E-8
VIII. Receiving Water Monitoring Requirements – Surface Water and Groundwater E-8
A. Monitoring Location R-001U and R-002D E-8
B. Monitoring Location G-001, G-002, and G-003 ..... E-9
IX. Other Monitoring Requirements E-10
A. Water Supply Monitoring—Monitoring Location S-001 ..... E-10
B. Biosolids Monitoring—Monitoring Location B-001 ..... E-10
C. Pond Monitoring—Monitoring Locations P-001, P-002, and P-003 ..... E-11
X. Reporting Requirements E-11
A. General Monitoring and Reporting Requirements E-11
B. Self Monitoring Reports (SMRs) E-12
C. Discharge Monitoring Reports (DMRs) E-14
D. Other Reports E-14

List of Tables

Table E-1. Monitoring Station Locations E-2
Table E-2. Influent Monitoring E-2
Table E-3. Effluent Monitoring E-3
Table E-4. Chronic Toxicity Testing Dilution Series E-6
Table E-5. Receiving Water Monitoring Requirements E-8
Table E-6. Groundwater Monitoring Requirements E-9
Table E-7. Water Supply Monitoring Requirements E-10
Table E-8. Treatment Pond and Storage Reservoir Monitoring Requirements E-11
Table E-9. Monitoring Periods and Reporting Schedule E-14
Table E-10. Reporting Requirements for Special Provisions Progress Reports E-15

ATTACHMENT E – MONITORING AND REPORTING PROGRAM (MRP)

The Code of Federal Regulations section 122.48 requires that all NPDES permits specify monitoring and reporting requirements. Water Code Sections 13267 and 13383 also authorize the Regional Water Quality Control Board (Regional Water Board) to require technical and monitoring reports. This MRP establishes monitoring and reporting requirements, which implement the federal and state regulations.

I. GENERAL MONITORING PROVISIONS

A. Samples and measurements taken as required herein shall be representative of the volume and nature of the monitored discharge. All samples shall be taken at the monitoring locations specified below and, unless otherwise specified, before the monitored flow joins or is diluted by any other waste stream, body of water, or substance. Monitoring locations shall not be changed without notification to and the approval of this Regional Water Board.

B. Chemical, bacteriological, and bioassay analyses shall be conducted at a laboratory certified for such analyses by the State Department of Health Services. In the event a certified laboratory is not available to the Discharger, analyses performed by a noncertified laboratory will be accepted provided a Quality Assurance-Quality Control Program is instituted by the laboratory. A manual containing the steps followed in this program must be kept in the laboratory and shall be available for inspection by Regional Water Board staff. The Quality Assurance-Quality Control Program must conform to USEPA guidelines or to procedures approved by the Regional Water Board.

C. All analyses shall be performed in a laboratory certified to perform such analyses by the California Department of Health Services. Laboratories that perform sample analyses shall be identified in all monitoring reports.

D. Appropriate flow measurement devices and methods consistent with accepted scientific practices shall be selected and used to ensure the accuracy and reliability of measurements of the volume of monitored discharges. All monitoring instruments and devices used by the Discharger to fulfill the prescribed monitoring program shall be properly maintained and calibrated as necessary to ensure their continued accuracy. All flow measurement devices shall be calibrated at least once per year to ensure continued accuracy of the devices.

E. Monitoring results, including noncompliance, shall be reported at intervals and in a manner specified in this Monitoring and Reporting Program.

II. MONITORING LOCATIONS

The Discharger shall establish the following monitoring locations to demonstrate compliance with the effluent limitations, discharge specifications, and other requirements in this Order:

Table E-1. Monitoring Station Locations

Discharge Point Name	Monitoring Location Name	Monitoring Location Description
--	INF-001	Treatment plant headworks
001	EFF-001	Downstream from the last connection through which wastewater, seepage and runoff treated in the interim tertiary treatment system (and the new wastewater treatment plant) can be admitted to the outfall (39°, 4', 30" N, 120°, 56', 30" W)
--	P-001	Collected from the treatment pond 1
--	P-002	Collected from the treatment pond 2
--	P-003	Collected from the Storage Reservoir
--	R-001U	Upstream from the discharge EFF-001
--	R-002D	100 feet downstream from the discharge EFF-001
--	G-001, G002, G-003	Groundwater monitoring wells
--	B-001	Biosolids
--	S-001	Municipal Water Supply Source Water

III. INFLUENT MONITORING REQUIREMENTS

A. Monitoring Location INF-001

1. Samples shall be collected at approximately the same time as effluent samples and should be representative of the influent for the period sampled. The Discharger shall monitor influent at INF-001 as follows:

Table E-2. Influent Monitoring

Parameter	Units	Sample Type	Minimum Sampling Frequency	Required Analytical Test Method
Biochemical Oxygen Demand (BOD) (5-day @ 20 Deg. C)	mg/L, lbs/day	24-hr Composite[1]	2/month	[2]
Total Suspended Solids (TSS)	mg/L, lbs/day	24-hr Composite[1]	2/month	[2]
Flow	mgd	Meter	Continuous	[2]

[1] 24-hour flow proportional composite

[2] Pollutants shall be analyzed using the analytical methods described in 40 CFR Part 136; for priority pollutants the methods must meet the lowest minimum levels (MLs) specified in Attachment 4 of the SIP, where no methods are specified for a given pollutant, by methods approved by this Regional Water Board or the State Water Board.

IV. EFFLUENT MONITORING REQUIREMENTS

A. Monitoring Location EFF-001

1. The Discharger shall monitor treated wastewater, seepage, and runoff at Monitoring Location EFF-001 as follows. If more than one analytical test method is listed for a given parameter, the Discharger must select from the listed methods and corresponding Minimum Level:

Table E-3. Effluent Monitoring

Parameter	Units	Sample Type	Minimum Sampling Frequency	Required Analytical Test Method and (Minimum Level, units), respectively
Flow	mgd	Meter	Continuous	[1]
Conventional Pollutants				
Biochemical Oxygen Demand (BOD) (5-day @ 20 Deg. C)	mg/L	24-hr Composite[2]	1/week	[1]
	lbs/day	Calculate	1/week	[1]
Total Suspended Solids (TSS)	mg/L	24-hr Composite[2]	1/week	[1]
	lbs/day	Calculate	1/week	[1]
pH	standard units	Grab	3/week	[1]
Priority Pollutants				
Copper, Total Recoverable	µg/L	Grab	1/month	[1]
Cyanide, Total (as CN)	µg/L	Grab	1/month	[1]
Bis (2-Ethylhexyl) Phthalate	µg/L	Grab	1/month	[1]
4,4-DDE	µg/L	Grab	1/month	[1]
Mercury, Total Recoverable	µg/L	Grab	1/month	[1]
	lbs/day	Calculated[11]		
Methyl Mercury	µg/L	Grab	1/month	[1]
Persistent Chlorinated Hydrocarbon Pesticides	µg/L	Grab	1/month	[1]
Priority Pollutants[3, 4]	µg/L	Grab	1/year	[1]
Non-Conventional Pollutants				
Aluminum, Total Recoverable[5]	µg/L	Grab	1/month	[1]
Ammonia Nitrogen, Total (as N)[6]	mg/L	Grab	1/week	[1]
Chloride	mg/L	Grab	1/month	[1]
Dissolved Oxygen	mg/L	Meter	Continuous	[1]
Electrical Conductivity @ 25°C	µmhos/cm	Grab	3/week	[1]
Hardness, Total (as CaCO3)	mg/L	Grab	1/quarter	[1]
Iron, Total Recoverable[5]	µg/L	Grab	1/month	[1]

Parameter	Units	Sample Type	Minimum Sampling Frequency	Required Analytical Test Method and (Minimum Level, units), respectively
Manganese, Total Recoverable	µg/L	Grab	1/month	[1]
Nitrate Nitrogen, Total (as N)	mg/L	Grab	1/month	[1]
Settleable Solids	mL/L-hr	24-hr Composite[2]	1/week	[1]
Standard Minerals[7]	mg/L	Grab	1/year	[1]
Temperature, Deg. Fahrenheit [8]	°F	Grab	3/week	[1]
Total Coliform	MPN/100 mL	Grab	3/week	[1]
Total Dissolved Solids (TDS)	mg/L	Grab	1/week	[1]
Chlorine, Total Residual [9]	mg/L	meter	continuous	[1]
Turbidity	NTU	Meter	Continuous	[1]
Whole Effluent Toxicity[10]	TU	Grab	[10]	[1]

[1] Pollutants shall be analyzed using the analytical methods described in 40 CFR Part 136; for priority pollutants the methods must meet the lowest minimum levels (MLs) specified in Attachment 4 of the SIP, where no methods are specified for a given pollutant, by methods approved by this Regional Water Board or the State Water Board.

[2] 24-hour flow proportioned composite.

[3] For priority pollutant constituents with effluent limitations, detection limits shall be below the effluent limitations. If the lowest minimum level (ML) published in Appendix 4 of the Policy for Implementation of Toxics Standards for Inland Surface Waters, Enclosed Bays, and Estuaries of California (State Implementation Plan or SIP) is not below the effluent limitation, the detection limit shall be the lowest ML. For priority pollutant constituents without effluent limitations, the detection limits shall be equal to or less than the lowest ML published in Appendix 4 of the SIP.

[4] Concurrent with receiving surface water sampling.

[5] Report as total recoverable.

[6] Monitoring for ammonia shall be concurrent with acute whole effluent toxicity monitoring. See Section V.A.1.

[7] Standard minerals shall include the following: boron, calcium, iron, magnesium, potassium, sodium, chloride, manganese, phosphorus, total alkalinity (including alkalinity series), and hardness, and include verification that the analysis is complete (i.e., cation/anion balance).

[8] Effluent Temperature monitoring shall be at the Outfall location.

[9] Total chlorine residual must be monitored with a method sensitive to and accurate at the permitted level of 0.01 mg/L. (see also Section VII.D., Compliance Determination)

[10] See Section V.

[11] The monthly average loading for mercury shall be calculated using the average monthly effluent flow volume and the monthly average mercury concentration.

2. If the discharge is intermittent rather than continuous, then on the first day of each such intermittent discharge, the Discharger shall monitor and record data for all of the constituents listed above, except for priority pollutants, after which the frequencies of analysis given in the schedule shall apply for the duration of each such intermittent discharge. In no event shall the Discharger be required to monitor and record data more often than twice the frequencies listed in the schedule.

V. WHOLE EFFLUENT TOXICITY TESTING REQUIREMENTS

A. **Acute Toxicity Testing.** The Discharger shall conduct acute toxicity testing to determine whether the effluent is contributing acute toxicity to the receiving water. The Discharger shall meet the following acute toxicity testing requirements:

1. *Monitoring Frequency* – The Discharger shall perform semi-annual acute toxicity testing, concurrent with effluent ammonia sampling.

2. *Sample Types* – For static non-renewal and static renewal testing, the samples shall be flow proportional 24-hour composites and shall be representative of the volume and quality of the discharge. The effluent samples shall be taken at the effluent monitoring location EFF-001.

3. *Test Species* – Test species shall be larval stage (0 to 14 days old) rainbow trout (*Oncorhynchus mykiss*) *or* fathead minnows (*Pimephales promelas*).

4. *Methods* – The acute toxicity testing samples shall be analyzed using EPA-821-R-02-012, Fifth Edition. Temperature, total residual chlorine, and pH shall be recorded at the time of sample collection. No pH adjustment may be made unless approved by the Executive Officer.

5. *Test Failure* – If an acute toxicity test does not meet all test acceptability criteria, as specified in the test method, the Discharger must re-sample and re-test as soon as possible, not to exceed 7 days following notification of test failure.

B. **Chronic Toxicity Testing**. The Discharger shall conduct three species chronic toxicity testing to determine whether the effluent is contributing chronic toxicity to the receiving water. The Discharger shall meet the following chronic toxicity testing requirements:

1. *Monitoring Frequency* – The Discharger shall perform semi-annual three species chronic toxicity testing.

2. *Sample Types* – Effluent samples shall be flow proportional 24-hour composites and shall be representative of the volume and quality of the discharge. The effluent samples shall be taken at the effluent monitoring location specified in the Monitoring and Reporting Program. The receiving water control shall be a grab sample obtained from the R-001U sampling location, as identified in the Monitoring and Reporting Program.

3. *Sample Volumes* – Adequate sample volumes shall be collected to provide renewal water to complete the test in the event that the discharge is intermittent.

4. *Test Species* – Chronic toxicity testing measures sublethal (e.g. reduced growth, reproduction) and/or lethal effects to test organisms exposed to an effluent compared to that of the control organisms. The Discharger shall conduct chronic toxicity tests with:

   - The cladoceran, water flea, *Ceriodaphnia dubia* (survival and reproduction test);

- The fathead minnow, *Pimephales promelas* (larval survival and growth test); and
- The green alga, *Selenastrum capricornutum* (growth test).

5. *Methods* – The presence of chronic toxicity shall be estimated as specified in *Short-term Methods for Estimating the Chronic Toxicity of Effluents and Receiving Waters to Freshwater Organisms, Fourth Edition,* EPA/821-R-02-013, October 2002.

6. *Reference Toxicant* – As required by the SIP, all chronic toxicity tests shall be conducted with concurrent testing with a reference toxicant and shall be reported with the chronic toxicity test results.

7. *Dilutions* – The chronic toxicity testing shall be performed using the dilution series identified in Table E-5, below. The receiving water control shall be used as the diluent (unless the receiving water is toxic).

8. *Test Failure* –The Discharger must re-sample and re-test as soon as possible, but no later than fourteen (14) days after receiving notification of a test failure. A test failure is defined as follows:

   a. The reference toxicant test or the effluent test does not meet all test acceptability criteria as specified in the *Short-term Methods for Estimating the Chronic Toxicity of Effluents and Receiving Waters to Freshwater Organisms, Fourth Edition*, EPA/821-R-02-013, October 2002 (Method Manual), and its subsequent amendments or revisions; or

   b. The percent minimum significant difference (PMSD) measured for the test exceeds the upper PMSD bound variability criterion in Table 6 on page 52 of the Method Manual. (A retest is only required in this case if the test results do not exceed the monitoring trigger specified in Special Provision VI.C.2.a.iii.)

Table E-4. Chronic Toxicity Testing Dilution Series

Sample	Dilutions (%)					Controls	
	100	75	50	25	12.5	Receiving Water	Laboratory Water
% Effluent	100	75	50	25	12.5	0	0
% Receiving Water	0	25	50	75	87.5	100	0
% Laboratory Water	0	0	0	0	0	0	100

C. **WET Testing Notification Requirements**. The Discharger shall notify the Regional Water Board within 24-hrs after the receipt of test results exceeding the monitoring trigger during regular or accelerated monitoring, or an exceedance of the acute toxicity effluent limitation.

D. **WET Testing Reporting Requirements**. All toxicity test reports shall include the contracting laboratory's complete report provided to the Discharger and shall be in accordance with the appropriate "Report Preparation and Test Review" sections of the method manuals. At a minimum, whole effluent toxicity monitoring shall be reported as follows:

1. **Chronic WET Reporting.** Regular chronic toxicity monitoring results shall be reported to the Regional Water Board within 30 days following completion of the test, and shall contain, at minimum:

   a. The results expressed in TUc, measured as 100/NOEC, and also measured as $100/LC_{50}$, $100/EC_{25}$, $100/IC_{25}$, and $100/IC_{50}$, as appropriate.

   b. The statistical methods used to calculate endpoints;

   c. The statistical output page, which includes the calculation of the percent minimum significant difference (PMSD);

   d. The dates of sample collection and initiation of each toxicity test; and

   e. The results compared to the numeric toxicity monitoring trigger.

   Additionally, the monthly discharger self-monitoring reports shall contain an updated chronology of chronic toxicity test results expressed in TUc, and organized by test species, type of test (survival, growth or reproduction), and monitoring frequency, i.e., either quarterly, monthly, accelerated, or TRE. (Note: items a through c, above, are only required when testing is performed using the full dilution series.)

2. **Acute WET Reporting.** Acute toxicity test results shall be submitted with the monthly discharger self-monitoring reports and reported as percent survival.

3. **TRE Reporting.** Reports for Toxicity Reduction Evaluations shall be submitted in accordance with the schedule contained in the Discharger's approved TRE Work Plan.

4. **Quality Assurance (QA).** The Discharger must provide the following information for QA purposes (If applicable):

   a. Results of the applicable reference toxicant data with the statistical output page giving the species, NOEC, LOEC, type of toxicant, dilution water used, concentrations used, PMSD, and dates tested.

   b. The reference toxicant control charts for each endpoint, which include summaries of reference toxicant tests performed by the contracting laboratory.

   c. Any information on deviations or problems encountered and how they were dealt with.

VI. LAND DISCHARGE MONITORING REQUIREMENTS

Not Applicable

VII. RECLAMATION MONITORING REQUIREMENTS

Not Applicable

VIII. RECEIVING WATER MONITORING REQUIREMENTS – SURFACE WATER AND GROUNDWATER

A. Monitoring Location R-001U and R-002D

1. The Discharger shall monitor the receiving water at Monitoring Locations R-001U and R-002D as follows:

Table E-5. Receiving Water Monitoring Requirements

Parameter	Units	Sample Type	Minimum Sampling Frequency	Required Analytical Test Method
Dissolved Oxygen	mg/L	Grab	1/week	[1,2]
	% Saturation	Grab	1/week	[1,2]
pH	Standard Units	Grab	1/week	[1,2]
Turbidity	NTU	Grab	1/week	[2]
Temperature, Deg. Fahrenheit	°F	Grab	1/week	[1,2]
Electrical Conductivity @ 25°C	µmhos/cm	Grab	1/week	[1,2]
Chlorine, Total Residual	mg/L	Grab	1/week	[2]
Fecal Coliform	MPN/ 100 mL	Grab	1/week	[2]
Ammonia (as N)	mg/L	Grab	1/week	[2]
Radioactivity	pCi/L	Grab	1/year	[2]
Hardness, Total (as CaCO3)	mg/L	Grab	1/year	[2]

[1] A hand-held field meter may be used, provided the meter utilizes a USEPA-approved algorithm/method and is calibrated and maintained in accordance with the manufacturer's instructions. A calibration and maintenance log for each meter used for monitoring required by this Monitoring and Reporting Program shall be maintained at the wastewater treatment plant.

[2] Pollutants shall be analyzed using the analytical methods described in 40 CFR Part 136; for priority pollutants the methods must meet the lowest minimum levels (MLs) specified in Appendix 4 of the SIP, where no methods are specified for a given pollutant by methods approved by this Regional Water Board or the State Water Board.

2. In conducting the receiving water sampling, a log shall be kept of the receiving water conditions throughout the reach bounded by Stations R-001U and R-002D. In the event that no receiving water is present at station R-001U, no receiving water monitoring data is required for station R-001U. Attention shall be given to the presence or absence of:

    a. Floating or suspended matter
    b. Discoloration

c. Bottom Deposits
d. Aquatic Life
e. Visible films, sheens, or coatings
f. Fungi, slimes, or objectionable growths
g. Potential nuisance conditions

Notes on receiving water conditions shall be summarized in the monitoring report.

B. Monitoring Location G-001, G-002, and G-003

1. The Discharger shall monitor groundwater at Monitoring Locations G-001, G-002, and G-003 as follows:

Table E-6. Groundwater Monitoring Requirements

Parameter	Units	Sample Type	Minimum Sampling Frequency	Required Analytical Test Method
Depth to Groundwater	feet	Grab	1/month	
Groundwater Elevation[1]	feet	Grab	1/month	
Gradient (direction of groundwater flow)	---	Grab	1/month	
Dissolved Oxygen	mg/L	Grab	1/month	[2,3]
pH	standard units	Grab	1/month	[2,3]
Electrical Conductivity at 25°C	µmhos/cm	Grab	1/month	[2,3]
Total Dissolved Solids (TDS)	mg/L	Grab	1/month	[2,3]
Nitrate Nitrogen, Total (as N)	mg/L	Grab	1/quarter	[3]
Total Kjeldahl Nitrogen (as N)	mg/L	Grab	1/quarter	[3]
Ammonia Nitrogen, Total (as N)	mg/L	Grab	1/quarter	[3]
Total Coliform	MPN/100 mL	Grab	1/quarter	[3]
Fecal Coliform	MPN/100 mL	Grab	1/quarter	[3]

[1] Groundwater elevation shall be used to calculate the direction and gradient of groundwater flow. Elevations shall be measured to the nearest one-hundredth of a foot from mean sea level. The groundwater elevation shall be measured prior to purging the wells.

[2] A hand-held field meter may be used, provided the meter utilizes USEPA-approved algorithm/method and is calibrated and maintained in accordance with the manufacturer's instructions. A calibration and maintenance log for each meter used for monitoring required by this Monitoring and Reporting Program shall be maintained at the wastewater treatment plant.

[3] Pollutants shall be analyzed using the analytical methods described in 40 CFR Part 136; for priority pollutants the methods must meet the lowest minimum levels (MLs) specified in Appendix 4 of the SIP, where no methods are specified for a given pollutant, by methods approved by this Regional Water Board or the State Water Board.

[4] Sampling for fecal coliform shall be performed for at least two consecutive quarters in any groundwater monitoring well following the detection in that well of total coliform organisms in excess of 2.2 MPN/100 mL.

IX. OTHER MONITORING REQUIREMENTS

A. Water Supply Monitoring—Monitoring Location S-001

1. A sampling station shall be established where a representative sample of the municipal water supply can be obtained. The Discharger shall monitor the municipal water supply at S-001 as follows:

Table E-7. Water Supply Monitoring Requirements

Parameter[1]	Units	Sample Type	Minimum Sampling Frequency	Required Analytical Test Method
Total Dissolved Solids (TDS)	mg/L	Grab	1/quarter	[3]
Electrical Conductivity @ 25 Deg. C [1]	µmhos/cm	Grab	1/quarter	[3]
Standard Minerals[2]	mg/L	Grab	1/year	[3]

[1] If the water supply is from more than one source, the electrical conductivity and total dissolved solids shall be reported as a weighted average and include copies of supporting calculations.

[2] Standard minerals shall include all major cations and anions and include verification that the analysis is complete (i.e. cation/anion balance).

[3] Pollutants shall be analyzed using the analytical methods described in 40 CFR Part 136; for priority pollutants the methods must meet the lowest minimum levels (MLs) specified in Appendix 4 of the SIP, where no methods are specified for a given pollutant, by methods approved by this Regional Water Board or the State Water Board.

B. Biosolids Monitoring—Monitoring Location B-001

1. A composite sample of sludge shall be collected when sludge is removed from the ponds for disposal in accordance with USEPA's *POTW Sludge Sampling and Analysis Guidance Document*, August 1989, and tested for the metals listed in Title 22.

2. Sampling records shall be retained for a minimum of five years. A log shall be kept of sludge quantities generated and of handling and disposal activities. The frequency of entries is discretionary; however, the log should be complete enough to serve as a basis for part of the annual report.

3. Upon removal of sludge, the Discharger shall submit characterization of sludge quality, including sludge percent solids and quantitative results of chemical analysis for the priority pollutants listed in 40 CFR 122 Appendix D, Tables II and III (excluding total phenols). Suggested methods for analysis of sludge are provided in USEPA publications titled *Test Methods for Evaluating Solid Waste: Physical/Chemical Methods* and *Test Methods for Organic Chemical Analysis of Municipal and Industrial Wastewater*. Recommended analytical holding times for sludge samples should reflect those specified in 40 CFR 136.6.3(e). Other guidance is available in USEPA's *POTW Sludge Sampling and Analysis Guidance Document*, August 1989.

C. Pond Monitoring—Monitoring Locations P-001, P-002, and P-003

1. A sampling station shall be established where a representative sample of the treatment ponds can be obtained. The Discharger shall monitor the treatment ponds and storage reservoir (to the extent sampling the storage reservoir is possible) at P-001, P-002, and P-003 as follows:

Table E-8. Treatment Pond and Storage Reservoir Monitoring Requirements

Parameter[1]	Units	Sample Type	Minimum Sampling Frequency	Required Analytical Test Method
Dissolved Oxygen	mg/L	Grab	1/week	[1]
pH	S.U.	Grab	1/week	[1]
Odors	--	Observation	1/week	
Freeboard	Tenths of feet	Measured	1/week	
Pond Elevation	Tenths of feet	Measured	1/week	

[1] Pollutants shall be analyzed using the analytical methods described in 40 CFR Part 136.

X. REPORTING REQUIREMENTS

A. General Monitoring and Reporting Requirements

1. The Discharger shall comply with all Standard Provisions (Attachment D) related to monitoring, reporting, and recordkeeping.

2. Upon written request of the Regional Water Board, the Discharger shall submit a summary monitoring report. The report shall contain both tabular and graphical summaries of the monitoring data obtained during the previous year(s).

3. **Compliance Time Schedules.** For compliance time schedules included in the Order, the Discharger shall submit to the Regional Water Board, on or before each compliance due date, the specified document or a written report detailing compliance or noncompliance with the specific date and task. If noncompliance is reported, the Discharger shall state the reasons for noncompliance and include an estimate of the date when the Discharger will be in compliance. The Discharger shall notify the Regional Water Board by letter when it returns to compliance with the compliance time schedule.

4. The Discharger shall report to the Regional Water Board any toxic chemical release data it reports to the State Emergency Response Commission within 15 days of reporting the data to the Commission pursuant to section 313 of the "Emergency Planning and Community Right to Know Act of 1986.

5. **Reporting Protocols.** The Discharger shall report with each sample result the applicable Reporting Level (RL) and the current Method Detection Limit (MDL), as determined by the procedure in Part 136.

   The Discharger shall report the results of analytical determinations for the presence of chemical constituents in a sample using the following reporting

protocols:

a. Sample results greater than or equal to the RL shall be reported as measured by the laboratory (i.e., the measured chemical concentration in the sample).

b. Sample results less than the RL, but greater than or equal to the laboratory's MDL, shall be reported as "Detected, but Not Quantified," or DNQ. The estimated chemical concentration of the sample shall also be reported.

   For the purposes of data collection, the laboratory shall write the estimated chemical concentration next to DNQ as well as the words "Estimated Concentration" (may be shortened to "Est. Conc."). The laboratory may, if such information is available, include numerical estimates of the data quality for the reported result. Numerical estimates of data quality may be percent accuracy (± a percentage of the reported value), numerical ranges (low to high), or any other means considered appropriate by the laboratory.

c. Sample results less than the laboratory's MDL shall be reported as "Not Detected," or ND.

d. Dischargers are to instruct laboratories to establish calibration standards so that the ML value (or its equivalent if there is differential treatment of samples relative to calibration standards) is the lowest calibration standard. At no time is the Discharger to use analytical data derived from *extrapolation* beyond the lowest point of the calibration curve.

6. **Multiple Sample Data.** When determining compliance with an AMEL, AWEL, or MDEL for priority pollutants and more than one sample result is available, the Discharger shall compute the arithmetic mean unless the data set contains one or more reported determinations of "Detected, but Not Quantified" (DNQ) or "Not Detected" (ND). In those cases, the Discharger shall compute the median in place of the arithmetic mean in accordance with the following procedure:

   a. The data set shall be ranked from low to high, ranking the reported ND determinations lowest, DNQ determinations next, followed by quantified values (if any). The order of the individual ND or DNQ determinations is unimportant.

   b. The median value of the data set shall be determined. If the data set has an odd number of data points, then the median is the middle value. If the data set has an even number of data points, then the median is the average of the two values around the middle unless one or both of the points are ND or DNQ, in which case the median value shall be the lower of the two data points where DNQ is lower than a value and ND is lower than DNQ.

B. Self Monitoring Reports (SMRs)

1. At any time during the term of this permit, the State or Regional Water Board may notify the Discharger to electronically submit Self-Monitoring Reports (SMRs) using the State Water Board's California Integrated Water Quality System (CIWQS) Program Web site (http://www.waterboards.ca.gov/ciwqs/index.html). Until such

notification is given, the Discharger shall submit hard copy SMRs. The CIWQS Web site will provide additional directions for SMR submittal in the event there will be service interruption for electronic submittal.

2. Monitoring results shall be submitted to the Regional Water Board by the **first day** of the second month following sample collection. Quarterly and annual monitoring results shall be submitted by the **first day of the second month following each calendar quarter, semi-annual period, and year**, respectively.

3. In reporting the monitoring data, the Discharger shall arrange the data in tabular form so that the date, the constituents, and the concentrations are readily discernible. The data shall be summarized in such a manner to illustrate clearly whether the discharge complies with waste discharge requirements. The highest daily maximum for the month, monthly and weekly averages, and medians, and removal efficiencies (%) for BOD and Total Suspended Solids, shall be determined and recorded as needed to demonstrate compliance.

4. With the exception of flow, all constituents monitored on a continuous basis (metered), shall be reported as daily maximums, daily minimums, and daily averages; flow shall be reported as the total volume discharged per day for each day of discharge.

5. If the Discharger monitors any pollutant at the locations designated herein more frequently than is required by this Order, the results of such monitoring shall be included in the calculation and reporting of the values required in the discharge monitoring report form. Such increased frequency shall be indicated on the discharge monitoring report form.

6. A letter transmitting the self-monitoring reports shall accompany each report. Such a letter shall include a discussion of requirement violations found during the reporting period, and actions taken or planned for correcting noted violations, such as operation or facility modifications. If the Discharger has previously submitted a report describing corrective actions and/or a time schedule for implementing the corrective actions, reference to the previous correspondence will be satisfactory. The transmittal letter shall contain the penalty of perjury statement by the Discharger, or the Discharger's authorized agent, as described in the Standard Provisions.

7. SMRs must be submitted to the Regional Water Board, signed and certified as required by the Standard Provisions (Attachment D), to the address listed below:

   Regional Water Quality Control Board
   Central Valley Region
   11020 Sun Center Dr., Suite #200
   Rancho Cordova, CA 95670-6114

8. Monitoring periods and reporting for all required monitoring shall be completed according to the following schedule:

Table E-9. Monitoring Periods and Reporting Schedule

Sampling Frequency	Monitoring Period Begins On…	Monitoring Period	SMR Due Date
Continuous	**Permit effective date**	**All**	**First day of second calendar month following month of sampling**
1/day	**Sunday following permit effective date or on permit effective date if on a Sunday**	**Sunday through Saturday**	**First day of second calendar month following month of sampling**
1/week	**Sunday following permit effective date or on permit effective date if on a Sunday**	**Sunday through Saturday**	**First day of second calendar month following month of sampling**
2/week	**Sunday following permit effective date or on permit effective date if on a Sunday**	**Sunday through Saturday**	**First day of second calendar month following month of sampling**
3/week	**Sunday following permit effective date or on permit effective date if on a Sunday**	**Sunday through Saturday**	**First day of second calendar month following month of sampling**
1/month	**First day of calendar month following permit effective date or on permit effective date if that date is first day of the month**	**First day of calendar month through last day of calendar month**	**First day of second calendar month following month of sampling**
2/month	**First day of calendar month following permit effective date or on permit effective date if that date is first day of the month**	**First day of calendar month through last day of calendar month**	**First day of second calendar month following month of sampling**
1/quarter	**Closest of January 1, April 1, July 1, or October 1 following (or on) permit effective date**	**January 1 through March 31 April 1 through June 30 July 1 through September 30 October 1 through December 31**	**1 May 1 August 1 November 1February**
1/year	**January 1 following (or on) permit effective date**	**January 1 through December 31**	**1 February**

C. Discharge Monitoring Reports (DMRs)

Not Applicable

D. Other Reports

1. **Progress Reports.** As specified in the compliance time schedules required in Special Provisions VI, progress reports shall be submitted in accordance with the following reporting requirements. At minimum, the progress reports shall include a discussion of the status of final compliance, whether the Discharger is on schedule to meet the final compliance date, and the remaining tasks to meet the final compliance date.

Table E-10. Reporting Requirements for Special Provisions Progress Reports

Special Provision	Reporting Requirements
BPTC Evaluation Tasks (Section VI.C.2.b.)	**1 February**, annually**,** following completion of Task 4 of BPTC Evaluation Compliance Schedule
Compliance Schedule Progress Reports for New Wastewater Treatment Plant Construction (Section VI.C.7.a.iii.	**1 January 2008** **1 July 2008**
Compliance Schedules for Final Effluent Limitations for ammonia, copper, and 4,4-DDE. (Section VI.C.7.b.i.)	**1 January and 1 June**, semi-annually, until final compliance

2. Within **60 days** of permit adoption, the Discharger shall submit a report outlining minimum levels, method detection limits, and analytical methods for approval, with a goal to achieve detection levels below applicable water quality criteria. At a minimum, the Discharger shall comply with the monitoring requirements for CTR constituents as outlined in Section 2.3 and 2.4 of the *Policy for Implementation of Toxics Standards for Inland Surface Waters, Enclosed Bays, and Estuaries of California*, adopted 2 March 2000 by the State Water Resources Control Board. All peaks identified by analytical methods shall be reported.

3. The Discharger's sanitary sewer system collects wastewater using sewers, pipes, pumps, and/or other conveyance systems and directs the raw sewage to the wastewater treatment plant. A "sanitary sewer overflow" is defined as a discharge to ground or surface water from the sanitary sewer system at any point upstream of the wastewater treatment plant. Sanitary sewer overflows are prohibited by this Order. All violations must be reported as required in Standard Provisions. Facilities (such as wet wells, regulated impoundments, tanks, highlines, *etc*.) may be part of a sanitary sewer system and discharges to these facilities are not considered sanitary sewer overflows, provided that the waste is fully contained within these temporary storage facilities.

4. **Annual Operations Report**. By **30 January** of each year, the Discharger shall submit a written report to the Executive Officer containing the following:

   a. The names, certificate grades, and general responsibilities of all persons employed at the Facility.

   b. The names and telephone numbers of persons to contact regarding the plant for emergency and routine situations.

   c. A statement certifying when the flow meter(s) and other monitoring instruments and devices were last calibrated, including identification of who performed the calibration.

d. A statement certifying whether the current operation and maintenance manual, and contingency plan, reflect the wastewater treatment plant as currently constructed and operated, and the dates when these documents were last revised and last reviewed for adequacy.

e. The Discharger may also be requested to submit an annual report to the Regional Water Board with both tabular and graphical summaries of the monitoring data obtained during the previous year. Any such request shall be made in writing. The report shall discuss the compliance record. If violations have occurred, the report shall also discuss the corrective actions taken and planned to bring the discharge into full compliance with the waste discharge requirements.

5. **Annual Groundwater Monitoring Report.** By 1 February of each year, the Discharger shall submit a written report presenting the results of the groundwater monitoring in compliance with Special Provision VI.C.2.c and Section VIII.B of this Monitoring and Reporting Program.

ATTACHMENT F – FACT SHEET

Table of Contents

Attachment F – Fact Sheet F-3
I. Permit Information F-3
II. Facility Description F-4
A. Description of Wastewater and Biosolids Treatment or Controls F-4
B. Discharge Points and Receiving Waters F-6
C. Summary of Existing Requirements and Self-Monitoring Report (SMR) Data F-7
D. Compliance Summary F-8
E. Planned Changes F-9
III. Applicable Plans, Policies, and Regulations F-10
A. Legal Authority F-10
B. California Environmental Quality Act (CEQA) F-10
C. State and Federal Regulations, Policies, and Plans F-10
D. Impaired Water Bodies on CWA 303(d) List F-13
E. Other Plans, Polices and Regulations F-14
IV. Rationale For Effluent Limitations and Discharge Specifications F-14
A. Discharge Prohibitions F-15
B. Technology-Based Effluent Limitations F-16
1. Scope and Authority F-16
2. Applicable Technology-Based Effluent Limitations F-16
C. Water Quality-Based Effluent Limitations (WQBELs) F-18
1. Scope and Authority F-18
2. Applicable Beneficial Uses and Water Quality Criteria and Objectives F-18
3. Determining the Need for WQBELs F-20
4. WQBEL Calculations F-36
5. Whole Effluent Toxicity (WET) F-40
D. Final Effluent Limitations F-41
1. Mass-based Effluent Limitations F-41
2. Averaging Periods for Effluent Limitations F-42
3. Satisfaction of Anti-Backsliding Requirements F-42
4. Satisfaction of Antidegradation Policy F-42
E. Interim Effluent Limitations F-48
F. Land Discharge Specifications F-49
G. Reclamation Specifications F-49
V. Rationale for Receiving Water Limitations F-49
A. Surface Water F-50
B. Groundwater F-53
VI. Rationale for Monitoring and Reporting Requirements F-54
A. Influent Monitoring F-54
B. Effluent Monitoring F-54
C. Whole Effluent Toxicity Testing Requirements F-54
D. Receiving Water Monitoring F-55
1. Surface Water F-55
2. Groundwater F-55

E. Other Monitoring Requirements F-56
VII. Rationale for Provisions F-56
A. Standard Provisions F-56
B. Special Provisions F-57
1. Reopener Provisions F-57
2. Special Studies and Additional Monitoring Requirements F-57
3. Best Management Practices and Pollution Prevention F-61
4. Construction, Operation, and Maintenance Specifications F-61
5. Special Provisions for Municipal Facilities (POTWs Only) F-62
6. Other Special Provisions F-62
7. Compliance Schedules F-63
VIII. Public Participation F-64
A. Notification of Interested Parties F-64
B. Written Comments F-65
C. Public Hearing F-65
D. Waste Discharge Requirements Petitions F-65
E. Information and Copying F-66
F. Register of Interested Persons F-66
G. Additional Information F-66

List of Tables

Table F-1. Facility Information F-3
Table F-2. Historic Effluent Limitations and Monitoring Data (up to 14 June 2006) F-7
Table F-3. Historic Effluent Limitations and Monitoring Data (after 14 June 2006) F-7
Table F-4. Summary of Technology-based Effluent Limitations F-18
Table F-5. Beneficial Uses F-19
Table F-6. Salinity Water Quality Criteria/Objectives F-32
Table F-7. WQBEL Calculations for Aluminum F-37
Table F-8. WQBEL Calculations for Ammonia F-38
Table F-9. WQBEL Calculations for Bis (2-ethylhexyl) phthalate F-38
Table F-10. WQBEL Calculations for Copper F-38
Table F-11. WQBEL Calculations for Cyanide F-39
Table F-12. Summary of Water Quality-based Effluent Limitations F-39
Table F-13. Summary of Final Effluent Limitations (For Discharge from the Interim Tertiary Treatment System) F-45
Table F-14. Summary of Final Effluent Limitations (For Discharge from the New Wastewater Treatment Plant) F-46
Table F-15. Interim Effluent Limitation Calculation Summary F-49

ATTACHMENT F – FACT SHEET

As described in section II of this Order, this Fact Sheet includes the legal requirements and technical rationale that serve as the basis for the requirements of this Order.

This Order has been prepared under a standardized format to accommodate a broad range of discharge requirements for Dischargers in California. Only those sections or subsections of this Order that are specifically identified as "not applicable" have been determined not to apply to this Discharger. Sections or subsections of this Order not specifically identified as "not applicable" are fully applicable to this Discharger.

I. PERMIT INFORMATION

The following table summarizes administrative information related to the Facility.

Table F-1. Facility Information

WDID	5A310101001
Discharger	City of Colfax
Name of Facility	Wastewater Treatment Plant
Facility Address	23550 Grandview Avenue
	Colfax, CA 95713
	Placer County
Facility Contact, Title and Phone	Joan Phillipe, City Manager, (530) 346-2313
Authorized Person to Sign and Submit Reports	Joan Phillipe, City Manager, (530) 346-2313
Mailing Address	PO Box 702, 33 South Main Street, Colfax, CA 95713
Billing Address	SAME
Type of Facility	Publicly Owned Treatment Works
Major or Minor Facility	Minor
Threat to Water Quality	2
Complexity	B
Pretreatment Program	N
Reclamation Requirements	Not Applicable
Facility Permitted Flow	0.2 million gallons per day (mgd) – Interim Tertiary Treatment System; 0.275 mgd – New Wastewater Treatment Plant
Facility Design Flow	0.2 mgd – Interim Tertiary Treatment System; 0.275 mgd – New Wastewater Treatment Plant
Watershed	Sacramento
Receiving Water	Tributary to Smuthers Ravine
Receiving Water Type	Inland Surface Water—Ephemeral Stream

A. The City of Colfax (hereinafter Discharger) is the owner and operator of the sanitary sewer collection system and Wastewater Treatment Plant (hereinafter Facility), a publicly owned treatment works.

For the purposes of this Order, references to the "discharger" or "permittee" in applicable federal and state laws, regulations, plans, or policy are held to be equivalent to references to the Discharger herein.

B. The Facility previously discharged treated domestic wastewater and storm water to land and collected and treated seepage wastewater from the storage reservoir to an unnamed tributary of the Smuthers Ravine, a water of the United States. The discharge to an unnamed tributary of the Smuthers Ravine was regulated by Order 5-01-180 which was adopted on 14 June 2001.

C. On 14 June 2001, the Regional Water Board also issued a Cease and Desist Order (CDO) contained in Order No. 5-01-181. The CDO established time schedules for meeting the discharge prohibitions and effluent limitations under Order No. 5-01-180. To comply with the CDO, the Facility upgraded the old wastewater treatment system described in the existing Order No. 5-01-180 to an interim tertiary treatment system. The interim system provides for domestic wastewater, collected seepage, and storm water to be treated in the interim tertiary treatment system and discharged to the unnamed tributary of the Smuthers Ravine.

D. The Discharger filed a report of waste discharge and submitted an application for renewal of its Waste Discharge Requirements (WDRs) and National Pollutant Discharge Elimination System (NPDES) permit on 1 December 2005. An addendum to the application was submitted on 19 May 2006. A site visit was conducted on 22 March 2006, to observe operations and collect additional data to develop permit limitations and conditions.

II. FACILITY DESCRIPTION

The Discharger owns and operates a sanitary sewage collection system and wastewater treatment plant, and provides sewerage service for the community of the City of Colfax, serving a population of approximately 1,800. The interim tertiary treatment system design daily average flow capacity is 0.2 mgd; the maximum design flow is 0.65 mgd.

A. Description of Wastewater and Biosolids Treatment or Controls

1. Previously, the wastewater was treated by a treatment system consisting of headworks and two aerated facultative treatment ponds. Treated wastewater was then stored in an unlined storage reservoir prior to land application. To comply with the Cease and Desist Order, the Discharger upgraded the old wastewater treatment system with an interim tertiary treatment system. Subsequent to construction and operation of the interim tertiary treatment system, the Facility ceased discharging wastewater to land. Domestic wastewater and collected seepage from the unlined storage reservoir are treated in the interim tertiary treatment system and discharged

from Discharge Point No. 001 (see table on cover page) to an unnamed tributary of Smuthers Ravine, a water of the United States. Smuthers Ravine is a tributary to the North Fork of the American River via Bunch Canyon, within the Sacramento River Watershed. The interim tertiary treatment system became operational in July/August 2005. The purpose of the interim tertiary treatment system is to treat wastewater and to dewater the existing storage reservoir to allow for installation of a liner for the reservoir. The storage reservoir has not been dewatered for more than 20 years. The Facility is planning to install a permanent wastewater treatment system to provide a Title 22 equivalent discharge.

2. A schematic diagram of the interim tertiary treatment system is shown Attachment C. The interim tertiary treatment system consists of headworks with a parshall flume and manual bar screen, two mechanically aerated treatment ponds (Pond 1 and Pond 2) arranged in series, chlorination, coagulation, sedimentation, filtration, dechlorination, and a 69 million gallon storage reservoir. Wastewater flows through the parshall flume, Pond 1, Pond 2, chlorination/coagulation chamber, and the filters. The treated wastewater is dechlorinated and pH is controlled before discharge through Discharge Point No. 001 to the unknown tributary of Smuthers Ravine. In case of an operational problem, wastewater from the treatment system is diverted to the storage reservoir. The stored water is later returned into Pond 2 of the treatment system.

   Pond 1 is concrete/gunite lined and has 6.7 acre-feet capacity with 3 foot freeboard. The pond has four 7.5 horse power (HP) surface aerators and normally discharges to Pond 2 by a 10 inch gravity pipe. In case of operational problems, bypass lines are available from Pond 1 to Pond 2 and spill is available from Pond 1 to Pond 2 and the storage reservoir. Pond 2 is concrete/gunite lined and has a capacity of 7.1 acre-feet capacity with 3 feet of freeboard. Pond 2 has two 10 HP surface aerators and normally discharges to the Pond 2 effluent pump station. Pond 2 effluent pumps consist of two 7.5 HP pumps with an approximate total capacity of 2.0 mgd. The pumps lift the discharge through a 12 inch pipe to the chlorine/coagulation contact chamber. In case of operational problems, bypass lines and spill are available from Pond 2 to the storage reservoir.

   The chlorination/coagulation chamber is 262 feet long, 5 feet wide, 5 feet deep. In the chamber, hypochlorite solution (for chlorination) and a coagulant are added to the wastewater. Hypochlorite solution and the coagulant solution are contained in a 2,000-gallon and 6,000-gallon plastic tank, respectively. The solutions are pumped separately by a calibration pump through a plastic pipe that feeds near the inlet to the chlorination/coagulation chamber. The wastewater from the chamber is then pumped to the filters by lift pumps. Two 7.5 HP pumps (one as backup) with a capacity of 450 gallons per minute (gpm) each, located at the end of the chlorine/coagulation contact tank, are used to pump the wastewater to the filters. In case of operational problems, the filter pumps automatically shut off, and bypass lines and spill are available to discharge from the chlorination/coagulation chamber to the storage reservoir. Solids that settle in the chlorine contact chamber are returned to the Storage Reservoir.

The filters consist of eight 4 foot diameter filters with graduated sand filter material. The filters have an automatic backwash cycle programmed to backwash every 2 hours. At the outlet end of the filters, a valve limits the treated effluent quantity to a maximum of 0.5 mgd discharge. The treated wastewater from the filters is discharged to a 6 inch PVC discharge force main line. The treated wastewater is then dechlorinated using sodium bisulfite solution and pH adjusted with sodium bicarbonate. The solution is stored in a 2,600-gallon plastic tank and is pumped by a calibration pump through a plastic tube that feeds into the discharge downstream of the filters. A flow meter is located in the 6 inch discharge pipe to continuously record the flow. The 6 inch PVC pipe continues for about 1,800 feet down an existing road near the downstream side of the storage reservoir and discharges through Discharge Point No. 001 (see table on cover page) to an unknown tributary of Smuthers Ravine. The discharge line from the Facility is valved such that it can be manually changed to discharge into the storage reservoir in case of problems.

The storage reservoir is used to store excess treated or partially treated effluent in order not to exceed the 0.5 mgd fully treated filtered discharge. The storage reservoir is unlined and has approximately 69,000,000 gallons of storage capacity and is approximately 70 feet high above the downstream toe. Two 75 HP pumps located at the downstream side of the storage reservoir pump wastewater stored in the storage reservoir into a 10 inch pipe that discharges into Pond 2. The stored wastewater is treated in the interim tertiary treatment system discussed above. The storage reservoir consists of dam/levee on the downstream side of the reservoir. The dam has a spillway, approximately 4 feet below the top of dam, to prevent overtopping and damage to the dam. The storage reservoir is unlined and constructed over bedrock in an area of several natural springs. Seepage from below the reservoir has occurred since its initial use in 1979 and the seepage flow is a function of the amount of water stored in the reservoir, and/or groundwater. Seepage from the foot of the dam is collected and pumped into the storage reservoir for subsequent return to Pond 2 and the interim tertiary treatment system discussed above prior to discharge through Discharge Point No. 001 to the unnamed tributary to the Smuthers Ravine.

B. Discharge Points and Receiving Waters

1. The Facility is located in Section 11, T14N, R9E, MDB&M, as shown in Attachment B (Figure B-1), a part of this Order.

2. Treated domestic wastewater, collected and treated seepage, and storm water runoff is discharged at Discharge Point 001 to the unnamed tributary of Smuthers Ravine, a water of the United States at a point Latitude 39°, 4’, 30” N and longitude 120°, 56’, 30” W.

3. Smuthers Ravine and its unnamed tributary are tributaries to the North Fork of the American River (source to Folsom Lake) via Bunch Canyon.

C. Summary of Existing Requirements and Self-Monitoring Report (SMR) Data

1. Effluent limitations/Discharge Specifications contained in the existing Order (up to 14 June 2006) for discharges from Discharge Point No. 001 (Monitoring Location EFF-001) and representative monitoring data from the term of the previous Order are as follows:

Table F-2. Historic Effluent Limitations and Monitoring Data (up to 14 June 2006)

Parameter	Units	Effluent Limitation				Monitoring Data (July 2001 To October 2005)
		Average Monthly	Average Weekly	Monthly Median	Maximum Daily	Highest Daily Discharge
Flow	mgd	--	--	--	--	2.0
Biochemical Oxygen Demand (BOD) (5-day @ 20 Deg. C)	mg/L	10	15	--	25	122
	lbs/day	16.7[1]	25[1]	--	41.7[1]	157
Total Suspended Solids (TSS)	mg/L	10	15	--	25	30
	lbs/day	16.7[1]	25[1]	--	41.7[1]	291
pH	s.u.	--	--	--	8.5[2]	8.07
Settleable Solids	mL/L	0.1	--	--	0.2	0.1
Total Coliform	MPN/100 mL	--	--	23	500	1,600
Chlorine, Total Residual	mg/L	--	--	--	0.02	18.4

[1]Mass based effluent limitations were based on a design flow of 0.2 mgd.
[2]pH should be between 6.5 and 8.5

2. Effluent limitations contained in the existing Order for discharges from Discharge Point No. 001 (Monitoring Location EFF-001) after 14 June 2006 are as follows:

Table F-3. Historic Effluent Limitations and Monitoring Data (after 14 June 2006)

Parameter	Units	Effluent Limitation						
		Month Avg.	7-day Median	7-day Avg.	4-Day Avg.	Daily Avg.	1-hr Avg.	Daily Max.
Biochemical Oxygen Demand (BOD) (5-day @ 20 Deg. C)	mg/L	10	--	15	--	--	--	25
	lbs/day	16.7[1]	--	25[1]	--	--	--	41.7[1]
Total Suspended Solids (TSS)	mg/L	10	--	15	--	--	--	25
	lbs/day	16.7[1]		25[1]	--	--	--	41.7[1]
pH	s.u.	--	--	--	--	--	--	8.5[2]
Settleable Solids	mL/L	0.1	--	--	--	--	--	0.2
Total Coliform	MPN/100 mL	--	2.2	--	--	--	--	23[3]
Turbidity	NTU	--	--	--	--	2	--	5

[1]Mass based effluent limitations were based on a design flow of 0.2 mgd.
[2]pH should be between 6.5 and 8.5.
[3]In a 30-day period, only a single sample may exceed 23 MPN/100 ml.

D. Compliance Summary

The following compliance summary applies to the Facility during the term of Order No. 5-01-180 (NPDES Permit No. CA0079529).

1. Provision G.6 of Order No. 5-01-180 and Cease and Desist Order (CDO) No. 5-01-181, due to inadequate capacity and treatment, establish a compliance schedule for the Discharger to increase plant capacity to accommodate current flow and future growth, and upgrade the facility to full tertiary treatment or complete land disposal. The Discharger was to have been in full compliance by 14 June 2006.

   Administrative Civil Liability (ACL) Order No. R5-2003-0167 assessed mandatory penalties for violations of Waste Discharge Requirements Order No. 5-01-180 in the amount of $351,000. The ACL Order allowed the City to complete a project to achieve full compliance with the permit by 14 December 2006 in lieu of paying the penalty.

   In response to the Orders, the Discharger constructed the interim tertiary treatment plant with an unusual configuration. Effluent from aerated ponds, including collected seepage from below a storage dam, is dosed with chlorine for disinfection and polymer for coagulation, and the chlorine contact channel is used simultaneously for chlorine contact and secondary sedimentation. The effluent is then passed through pressure sand filters , and then is dechlorinated prior to discharge. The Discharger also lined a drainage ditch to minimize runoff from entering the treatment ponds. The plant has generally achieved compliance with effluent limitations. Compliance with the permit, CDO and ACL Orders is being evaluated.

   In October 2006, representatives from the Department of Health Services (DHS) inspected the interim tertiary treatment facility at the request of Regional Water Board staff. By letter dated 11 December 2006 to the Regional Water Board, DHS reported that the configuration and operation of the facility does not provide adequate disinfection even though it may comply with bacterial standards. Also, DHS stated the filtration system over time is likely to develop problems. DHS recommended that the City modify the facilities to (1) provide post-filtration disinfection and (2) replace the existing filtration equipment with a process proven to be effective for filtering sewage effluent.

   On 1 March 2007 the Discharger submitted to the Regional Water Board, facility plans for a wastewater treatment plant upgrade and a construction documents project manual for city approval and authorization to bid. The Discharger stated in a Reasonable Potential and Anti-Degradation Analysis and Infeasibility Report, dated February 21, 2007, that, “The City currently is in the final stages of the new WWTP that will produce Title 22 equivalent discharge. Solicitation of bids is tentatively scheduled to begin after the City Council meeting of February 27, 2007 for the New WWTP. The City has applied for SRF grant and loan funds to finance the New WWTP.”

On May 11, 2007, in a phone conversation with the Discharger, the Discharger reported that they were awaiting final state approval of a $1.9 million grant and a $9.3 million loan to secure funding for the construction of the new treatment plant. The State Water Board plans to hold a public hearing for approval of the grant and loan on June 5, 2007. The Discharger stated that assuming they secure the anticipated funding, they would begin construction of the new treatment plant in July or August of 2007. The Discharger expects the new treatment plant to be completed by early November 2008.

2. The facility logged numerous effluent limit violations during the term of Order No. 5-01-180. These included violations of total coliform (daily maximum, 7-day median and monthly median), residual chlorine, BOD (daily maximum, daily average and monthly average), TSS, pH, fecal and discolored water. The facility also violated receiving water dissolved oxygen, fecal coliform and turbidity limits. The facility experienced spills from irrigation pipes, overflows from Pond 1 to the storage reservoir, several overflows from the storage reservoir, and violated freeboard levels. There were also reports of odors outside of the facility.

3. The Discharger was issued Notices of Violations in November 2001 and October 2002 based on inspection by Regional Board staff. In each case there were a variety of violations including violations of effluent limit and receiving water objectives, failure to report sampling results, lab sheet transcription errors and improper Chain of Custody procedures. A site inspection occurred on 26 April 20006 during which several effluent violations for total residual chlorine and coliform were noted.

E. Planned Changes

1. The Discharger is planning to replace the interim tertiary treatment system with a new biological nutrient removal (BNR) treatment plant designed to meet Title 22 equivalent requirements. The design average dry weather flow for the new system is 0.275 mgd; the design flow of the system is 0.5 mgd. The combined domestic wastewater, collected seepage, and runoff will be treated in the new treatment plant and discharged through Discharge Point No. 001 to the unnamed tributary of Smuthers Ravine. No discharge to the land will occur. Attachment C provides a flow diagram for the new BNR treatment plant.

   At the request of Regional Water Board staff, DHS evaluated the design of the proposed tertiary treatment facility for compliance with Title 22 requirements. By letter dated 16 May 2007, DHS stated: “The facility design meets the requirements for tertiary treated effluent specified in the California Code of Regulations, Title 22, Division 4, Chapter 3. We note, however, that the specifications for both the filtration and ultraviolet radiation processes include equipment that has already been approved by the Department for use in recycled water systems, but allow a bidder the option to use “equivalent” equipment. Please be advised that any such “equivalent” equipment must also have prior approval by the Department. DHS also

provided recommendations regarding a rapid mix process for coagulant and the operations manual.

III. APPLICABLE PLANS, POLICIES, AND REGULATIONS

The requirements contained in this Order are based on the applicable plans, policies, and regulations identified in section II of the Limitations and Discharge Requirements (Findings). This section provides supplemental information, where appropriate, for the plans, policies, and regulations relevant to the discharge.

A. Legal Authority

See Limitations and Discharge Requirements - Findings, Section II.C.

B. California Environmental Quality Act (CEQA)

See Limitations and Discharge Requirements - Findings, Section II.E.

C. State and Federal Regulations, Policies, and Plans

1. **Water Quality Control Plans**. The Regional Water Board adopted a *Water Quality Control Plan, Fourth Edition (Revised August 2006), for the Sacramento and San Joaquin River Basins* (Basin Plan) that designates beneficial uses, establishes water quality objectives, and contains implementation programs and policies to achieve those objectives for all waters addressed through the plan. In addition, State Water Board Resolution No. 88-63 requires that, with certain exceptions, the Regional Water Board assign the municipal and domestic supply use to water bodies that do not have beneficial uses listed in the Basin Plan. The beneficial uses of Smuthers Ravine and its unnamed tributary, downstream of the discharge are municipal and domestic supply; agricultural supply, including irrigation; water contact recreation, including canoeing and rafting; non-contact water recreation, including aesthetic enjoyment; warm (potential use) and cold freshwater habitat; cold spawning, reproduction, and /or early development; and wildlife habitat.

   The Basin Plan on page II-1.00 states: "*Protection and enhancement of existing and potential beneficial uses are primary goals of water quality planning…*" and with respect to disposal of wastewaters states that "...*disposal of wastewaters is [not] a prohibited use of waters of the State; it is merely a use which cannot be satisfied to the detriment of beneficial uses.*"

   The federal CWA section 101(a)(2), states: "*it is the national goal that wherever attainable, an interim goal of water quality which provides for the protection and propagation of fish, shellfish, and wildlife, and for recreation in and on the water be achieved by July 1, 1983.*" Federal Regulations, developed to implement the requirements of the CWA, create a rebuttable presumption that all waters be designated as fishable and swimmable. Federal Regulations, 40 CFR sections 131.2 and 131.10, require that all waters of the State regulated to protect the beneficial uses of public water supply, protection and propagation of fish, shell fish

and wildlife, recreation in and on the water, agricultural, industrial and other purposes including navigation. Section 131.3(e), 40 CFR, defines existing beneficial uses as those uses actually attained after 28 November 1975, whether or not they are included in the water quality standards. Federal Regulation, 40 CFR section 131.10 requires that uses be obtained by implementing effluent limitations, requires that all downstream uses be protected and states that in no case shall a state adopt waste transport or waste assimilation as a beneficial use for any waters of the United States.

In reviewing whether the existing and/or potential uses of the North Fork of the American River (source to Folsom Lake) apply to the unnamed tributary of Smuthers Ravine, the Regional Water Board has considered the following facts:

a. Domestic Supply and Agricultural Supply

   The Regional Water Board is required to apply the beneficial uses of municipal and domestic supply to the unnamed tributary of Smuthers Ravine based on State Water Board Resolution No. 88-63 which was incorporated in the Basin Plan pursuant to Regional Water Board Resolution No. 89-056. In addition, the State Water Resources Control Board (State Water Board) has issued water rights to existing water users along unnamed tributary of Smuthers Ravine and the North Fork of the American River (source to Folsom Lake) downstream of the discharge for domestic and irrigation uses. Since unnamed tributary of Smuthers Ravine is an ephemeral stream, the unnamed tributary of Smuthers Ravine likely provides groundwater recharge during periods of low flow. The groundwater is a source of drinking water. In addition to the existing water uses, growth in the area, downstream of the discharge is expected to continue, which presents a potential for increased domestic and agricultural uses of the water in unnamed tributary of Smuthers Ravine.

b. Water Contact and Noncontact Recreation and Esthetic Enjoyment

   The Regional Water Board finds that the discharge flows through residential areas, there is ready public access to unnamed tributary of Smuthers Ravine, exclusion of the public is unrealistic and contact recreational activities currently exist along unnamed tributary of Smuthers Ravine and downstream waters and these uses are likely to increase as the population in the area grows. Prior to flowing into North Fork of the American River (source to Folsom Lake), unnamed tributary of Smuthers Ravine flows through areas of general public access, meadows, residential areas, and parks. North Fork of the American River (source to Folsom Lake) also offers recreational opportunities.

c. Preservation and Enhancement of Fish, Wildlife, and Other Aquatic Resources

   Smuthers Ravine and its unnamed tributary flows to North Fork of the American River (source to Folsom Lake) via Bunch Canyon. The California Department of Fish and Game (DFG) has verified that the fish species present in unnamed

tributary of Smuthers Ravine and downstream waters are consistent with both cold and potential warm water fisheries, that there is a potential for anadromous fish migration necessitating a cold water designation. The Basin Plan (Table II-1) designates the North Fork of the American River (source to Folsom Lake) as being both a cold and warm freshwater habitat. Therefore, pursuant to the Basin Plan (Table II-1, Footnote (2)), the cold designation applies to unnamed tributary of Smuthers Ravine. The cold-water habitat designation necessitates that the in-stream dissolved oxygen concentration be maintained at, or above, 7.0 mg/L.

Upon review of the flow conditions, habitat values, and beneficial uses of unnamed tributary of Smuthers Ravine, and the facts described above, the Regional Water Board finds that the beneficial uses identified in the Basin Plan for North Fork of the American River (source to Folsom Lake) are applicable to unnamed tributary of Smuthers Ravine.

This Order contains Effluent Limitations requiring a tertiary level of treatment, or equivalent, which is necessary to protect the beneficial uses of the receiving water. The Regional Water Board has considered the factors listed in CWC section 13241 in establishing these requirements, as discussed in more detail in the Fact Sheet, Attachment F, Subsections IV.B.2 and IV.C.3.q.

2. **Antidegradation Policy.** Section 131.12 requires that the state water quality standards include an antidegradation policy consistent with the federal policy. The State Water Board established California's antidegradation policy in State Water Board Resolution No. 68-16. Resolution No. 68-16 incorporates the federal antidegradation policy where the federal policy applies under federal law. Resolution No. 68-16 requires that existing water quality be maintained unless degradation is justified based on specific findings. The Regional Water Board's Basin Plan implements, and incorporates by reference, both the State and federal antidegradation policies. As discussed in detail in the Fact Sheet (Attachment F, Section IV.D.4.) the discharge is consistent with the antidegradation provisions of 40 CFR section 131.12 and State Water Board Resolution No. 68-16.

3. **Anti-Backsliding Requirements.** Sections 402(o)(2) and 303(d)(4) of the CWA and federal regulations at title 40, Code of Federal Regulations section 122.44(l) prohibit backsliding in NPDES permits. These anti-backsliding provisions require that effluent limitations in a reissued permit must be as stringent as those in the previous permit, with some exceptions in which limitations may be relaxed. Compliance with the Anti-Backsliding requirements is discussed in Section IV.D.3.

4. **Emergency Planning and Community Right to Know Act**. Section 13263.6(a), California Water Code, requires that "*the Regional Water Board shall prescribe effluent limitations as part of the waste discharge requirements of a POTW for all substances that the most recent toxic chemical release data reported to the state emergency response commission pursuant to Section 313 of the Emergency Planning and Community Right to Know Act of 1986 (42 U.S.C. Sec. 11023) (EPCRKA) indicate as discharged into the POTW, for which the State Water Board*

or the Regional Water Board has established numeric water quality objectives, and has determined that the discharge is or may be discharged at a level which will cause, have the reasonable potential to cause, or contribute to, an excursion above any numeric water quality objective".

The most recent toxic chemical data report does not indicate any reportable off-site releases or discharges to the collection system for this Facility. Therefore, a reasonable potential analysis based on information from Emergency Planning and Community Right to Know Act (EPCRA) cannot be conducted. Based on information from EPCRA, there is no reasonable potential to cause or contribute to an excursion above any numeric water quality objectives included within the Basin Plan or in any State Water Board plan, so no effluent limitations are included in this permit pursuant to CWC section 13263.6(a).

However, as detailed elsewhere in this Order, available effluent data indicate that there are constituents present in the effluent that have a reasonable potential to cause or contribute to exceedances of water quality standards and require inclusion of effluent limitations based on federal and state laws and regulations.

5. **Stormwater Requirements.** USEPA promulgated Federal Regulations for storm water on 16 November 1990 in 40 CFR Parts 122, 123, and 124. The NPDES Industrial Storm Water Program regulates storm water discharges from wastewater treatment facilities. Wastewater treatment plants with design flows greater than 1 mgd are applicable industries under the stormwater program and are obligated to comply with the Federal Regulations. This Order regulates storm water collected at the Facility.

6. **Endangered Species Act.** This Order does not authorize any act that results in the taking of a threatened or endangered species or any act that is now prohibited, or becomes prohibited in the future, under either the California Endangered Species Act (Fish and Game Code sections 2050 to 2097) or the Federal Endangered Species Act (16 U.S.C.A. sections 1531 to 1544). This Order requires compliance with effluent limits, receiving water limits, and other requirements to protect the beneficial uses of waters of the state. The Discharger is responsible for meeting all requirements of the applicable Endangered Species Act.

D. Impaired Water Bodies on CWA 303(d) List

1. Under Section 303(d) of the 1972 Clean Water Act, states, territories and authorized tribes are required to develop lists of water quality limited segments. The waters on these lists do not meet water quality standards, even after point sources of pollution have installed the minimum required levels of pollution control technology. On November 30, 2006 USEPA gave approval to California's 2006 Section 303(d) List of Water Quality Limited Segments. The Basin Plan references this list of Water Quality Limited Segments (WQLSs), which are defined as "…*those sections of lakes, streams, rivers or other fresh water bodies where water quality does not meet (or is not expected to meet) water quality standards even after the application of*

appropriate limitations for point sources (40 CFR 130, et seq.)." The Basin Plan also states, "*Additional treatment beyond minimum federal standards will be imposed on dischargers to [WQLSs]. Dischargers will be assigned or allocated a maximum allowable load of critical pollutants so that water quality objectives can be met in the segment.*" The Smuthers Ravine and its unnamed tributary are not listed as a WQLSs in the 303(d) list of impaired water bodies.

E. Other Plans, Polices and Regulations

1. The discharge authorized herein and the treatment and storage facilities associated with the discharge of treated municipal wastewater, except for discharges of residual sludge and solid waste, are exempt from the requirements of Title 27, California Code of Regulations (CCR), section 20005 *et seq*. (hereafter Title 27). The exemption, pursuant to Title 27 CCR section 20090(a), is based on the following:

   a. The waste consists primarily of domestic sewage and treated effluent;

   b. The waste discharge requirements are consistent with water quality objectives; and

   c. The treatment and storage facilities described herein are associated with a municipal wastewater treatment plant.

IV. RATIONALE FOR EFFLUENT LIMITATIONS AND DISCHARGE SPECIFICATIONS

Effluent limitations and toxic and pretreatment effluent standards established pursuant to Sections 301 (Effluent Limitations), 302 (Water Quality Related Effluent Limitations), 304 (Information and Guidelines), and 307 (Toxic and Pretreatment Effluent Standards) of the Clean Water Act (CWA) and amendments thereto are applicable to the discharge.

The Federal CWA mandates the implementation of effluent limitations that are as stringent as necessary to meet water quality standards established pursuant to state or federal law [33 U.S.C., § 1311(b)(1)(C); 40 CFR, § 122.44(d)(1)]. NPDES permits must incorporate discharge limits necessary to ensure that water quality standards are met. This requirement applies to narrative criteria as well as to criteria specifying maximum amounts of particular pollutants. Pursuant to Federal Regulations, 40 CFR Section 122.44(d)(1)(i), NPDES permits must contain limits that control all pollutants that "*are or may be discharged at a level which will cause, have the reasonable potential to cause, or contribute to an excursion above any state water quality standard, including state narrative criteria for water quality*." Federal Regulations, 40 CFR, §122.44(d)(1)(vi), further provide that "[w]*here a state has not established a water quality criterion for a specific chemical pollutant that is present in an effluent at a concentration that causes, has the reasonable potential to cause, or contributes to an excursion above a narrative criterion within an applicable State water quality standard, the permitting authority must establish effluent limits.*"

The CWA requires point source discharges to control the amount of conventional, non-

conventional, and toxic pollutants that are discharged into the waters of the United States. The control of pollutants discharged is established through effluent limitations and other requirements in NPDES permits. There are two principal bases for effluent limitations: 40 CFR §122.44(a) requires that permits include applicable technology-based limitations and standards, and 40 CFR §122.44(d) requires that permits include water quality-based effluent limitations to attain and maintain applicable numeric and narrative water quality criteria to protect the beneficial uses of the receiving water where numeric water quality objectives have not been established. The Regional Water Board's Basin Plan, page IV-17.00, contains an implementation policy ("Policy for Application of Water Quality Objectives") that specifies that the Regional Water Board "*will, on a case-by-case basis, adopt numerical limitations in orders which will implement the narrative objectives*." This Policy complies with 40 CFR §122.44(d)(1). With respect to narrative objectives, the Regional Water Board must establish effluent limitations using one or more of three specified sources, including (1) EPA's published water quality criteria, (2) a proposed state criterion (*i.e*., water quality objective) or an explicit state policy interpreting its narrative water quality criteria (*i.e*., the Regional Water Board's "Policy for Application of Water Quality Objectives")(40 CFR 122.44(d)(1)(vi) (A), (B) or (C)), or (3) an indicator parameter. The Basin Plan contains a narrative objective requiring that: "*All waters shall be maintained free of toxic substances in concentrations that produce detrimental physiological responses in human, plant, animal, or aquatic life*" (narrative toxicity objective). The Basin Plan requires the application of the most stringent objective necessary to ensure that surface water and groundwater do not contain chemical constituents, discoloration, toxic substances, radionuclides, or taste and odor producing substances that adversely affect beneficial uses. The Basin Plan states that material and relevant information, including numeric criteria, and recommendations from other agencies and scientific literature will be utilized in evaluating compliance with the narrative toxicity objective. The Basin Plan also limits chemical constituents in concentrations that adversely affect surface water beneficial uses. For waters designated as municipal, the Basin Plan specifies that, at a minimum, waters shall not contain concentrations of constituents that exceed Maximum Contaminant Levels (MCL) of CCR Title 22. The Basin Plan further states that, to protect all beneficial uses, the Regional Water Board may apply limits more stringent than MCLs.

A. Discharge Prohibitions

1. *As stated in section I.G of Attachment D, Standard Provisions, this Order prohibits bypass from any portion of the treatment facility*. *Federal Regulations, 40 CFR 122.41 (m), define "bypass" as the intentional diversion of waste streams from any portion of a treatment facility. This section of the Federal Regulations, 40 CFR 122.41 (m)(4), prohibits bypass unless it is unavoidable to prevent loss of life, personal injury, or severe property damage. In considering the Regional Water Board's prohibition of bypasses, the State Water Board adopted a precedential decision, Order No. WQO 2002-0015, which cites the Federal Regulations, 40 CFR 122.41(m), as allowing bypass only for essential maintenance to assure efficient operation.*

B. Technology-Based Effluent Limitations

1. Scope and Authority

Regulations promulgated in section 125.3(a)(1) require technology-based effluent limitations for municipal Dischargers to be placed in NPDES permits based on Secondary Treatment Standards or Equivalent to Secondary Treatment Standards.

The Federal Water Pollution Control Act Amendments of 1972 (PL 92-500) established the minimum performance requirements for POTWs [defined in section 304(d)(1)]. Section 301(b)(1)(B) of that Act requires that such treatment works must, as a minimum, meet effluent limitations based on secondary treatment as defined by the USEPA Administrator.

Based on this statutory requirement, USEPA developed secondary treatment regulations, which are specified in Part 133. These technology-based regulations apply to all municipal wastewater treatment plants and identify the minimum level of effluent quality attainable by secondary treatment in terms of biochemical oxygen demand (BOD_5), total suspended solids (TSS), and pH.

2. Applicable Technology-Based Effluent Limitations

a. **BOD_5 and TSS.** Federal Regulations, 40 CFR, Part 133, establish the minimum weekly and monthly average level of effluent quality attainable by secondary treatment for BOD_5 and TSS. Tertiary treatment is required by WDRs Order No. 5-01-180 and is necessary to protect the beneficial uses of the receiving stream and the final effluent limitations for BOD_5 and TSS are based on the technical capability of the tertiary process. BOD_5 is a measure of the amount of oxygen used in the biochemical oxidation of organic matter. The secondary and tertiary treatment standards for BOD_5 and TSS are indicators of the effectiveness of the treatment processes. The principal design parameter for wastewater treatment plants is the daily BOD_5 and TSS loading rates and the corresponding removal rate of the system. In applying 40 CFR Part 133 for weekly and monthly average BOD_5 and TSS limitations, the application of tertiary treatment processes results in the ability to achieve lower levels for BOD_5 and TSS than secondary standards; the 30-day average BOD_5 and TSS limitations of 10 mg/L have been continued from Order No. 5-01-180, which are technically based on the capability of a tertiary system. In addition to the average weekly and average monthly effluent limitations, a daily maximum effluent limitation for BOD_5 and TSS is included in the Order to ensure that the treatment works are not organically overloaded and operate in accordance with design capabilities. See Table F-4 for final technology-based effluent limitations required by this Order. In addition, 40 CFR 133.102, in describing the minimum level of effluent quality attainable by secondary treatment, states that the 30-day average percent removal shall not be less than 85 percent. If 85 percent removal of BOD_5 and TSS must be achieved by a secondary treatment plant, it must also be achieved by a tertiary (i.e., treatment beyond secondary level) treatment plant. This Order contains a

limitation requiring an average of 85 percent removal of BOD_5 and TSS over each calendar month. The technology-based secondary treatment standard also requires that pH shall be maintained between 6.0 and 9.0 standard units, however the water quality-based requirement is more stringent.

b. **Flow.** The current interim wastewater treatment plant is designed to provide a tertiary level of treatment for up to an influent average dry weather design flow of 0.2 mgd. The proposed new wastewater treatment plant is designed to provide a tertiary level of treatment for an influent average dry weather design flow of 0.275 mgd. However, due to the large surface area of the two treatment ponds and the storage reservoir in both the current and proposed facilities (approximately 10 acres) during rain events, the facilities may discharge significantly more effluent due to storm water entering the ponds and reservoir. The current and proposed treatment plants are capable of a maximum daily discharge rate of up to 0.65 mgd and 0.5 mgd, respectively, of commingled storm water and tertiary treated effluent.

The sewage collection system experiences excessive rain-induced infiltration and inflow (I/I), causing high flows to the wastewater treatment facility during winter periods. 40 CFR Section 35.2005(b)(29) defines “Nonexcessive inflow” as the maximum total flow rate during storm events which does not result in chronic operational problems related to hydraulic overloading of the treatment works or which does not result in a total flow of more than 275 gallons per capita per day (domestic base flow plus infiltration inflow). Chronic operational problems may include surcharging, backups, bypasses, and overflows. At the Facility, excess flows are stored in the treatment ponds and storage reservoir, and then are treated and discharged to surface waters throughout the year. Although the design average daily dry weather flow (ADDWF) is currently 0.2 mgd, and the future design ADDWF is 0.275 mgd, the Discharger has requested to discharge 0.5 mgd of treated effluent year-round in order to process all the excess I/I received at the plant over each winter period. The increased discharge flows exceed the flow authorized to be discharged by Order No. R5-2007-0130. Some I/I is expected in any collection system, and many facilities must discharge increased flows above the ADDWF for short periods following significant wet weather events. These short duration peak flows are authorized discharges, as long as they remain within the peak wet weather design flow and there are no violations of other permit requirements. However, the amount of I/I into the Facility’s collection system is excessive, causing the Discharger to increase the overall capacity of the wastewater treatment facility, and construct and operate a 69 million gallon storage reservoir that has been subject to concerns regarding seepage.

It is not reasonable to establish effluent flow limitations in this Order significantly higher than the average daily design flow, based on the fact that significant I/I exists, and not take actions to reduce the I/I. Therefore, this Order contains an Average Daily Dry Weather Discharge Flow effluent limitation of 0.2 mgd for the current treatment plant and 0.275 for the proposed treatment plant. Mass-based

effluent limitations for pollutants continue to be based on the actual average daily design capacity of the facilities (0.2 mgd and 0.275 mgd) and remain applicable during storm events.

Summary of Technology-based Effluent Limitations
Discharge Point No. 001

Table F-4. Summary of Technology-based Effluent Limitations

Parameter	Units	Effluent Limitations				
		Average Monthly	Average Weekly	Maximum Daily	Instantaneous Minimum	Instantaneous Maximum
Biochemical Oxygen Demand (BOD) (5-day @ 20 Deg. C)	mg/L	10	15	25	--	--
	lbs/day[1]	17	25	42	--	--
	lbs/day[2]	23	34	57	--	--
Total Suspended Solids (TSS)	mg/L	10	15	25	--	--
	lbs/day[1]	17	25	42	--	--
	lbs/day[2]	23	34	42	--	--
BOD and TSS Removal	%	85	--	--	--	--

[1] Current Treatment Facility - Based on an average dry weather design flow of 0.2 mgd.
[2] Proposed Treatment Facility - Based on an average dry weather design flow of 0.275 mgd.

C. Water Quality-Based Effluent Limitations (WQBELs)

1. Scope and Authority

As specified in section 122.44(d)(1)(i), permits are required to include WQBELs for pollutants (including toxicity) that are or may be discharged at levels that cause, have reasonable potential to cause, or contribute to an in-stream excursion above any state water quality standard. The process for determining reasonable potential and calculating WQBELs when necessary is intended to protect the designated uses of the receiving water as specified in the Basin Plan, and achieve applicable water quality objectives and criteria that are contained in other state plans and policies, or any applicable water quality criteria contained in the CTR and NTR.

2. Applicable Beneficial Uses and Water Quality Criteria and Objectives

a. **Receiving Water.** The receiving stream is unnamed tributary of Smuthers Ravine, which is tributary to the North Fork of the American River (source to Folsom Lake), via Bunch Canyon. The beneficial uses of the North Fork of the American River (source to Folsom Lake), as described above in III.C.1 are as follows:

Table F-5. Beneficial Uses

Discharge Point	Receiving Water Name	Beneficial Use(s)
001	Unnamed tributary of Smuthers Ravine, tributary to the North Fork of the American River	Existing: Municipal and domestic supply (MUN); agricultural supply for irrigation (AGR); water contact recreation, including canoeing and rafting (REC-1); non-contact water recreation, including aesthetic enjoyment (REC-2); cold freshwater habitat (COLD); cold spawning, reproduction, and/or early development (SPWN); and wildlife habitat (WILD). Potential: Warm freshwater habitat (WARM). Groundwater: Municipal and domestic water supply (MUN); industrial service supply (IND); industrial process supply (PRO); and agricultural supply (AGR.

b. **Hardness.** While no effluent limitation for hardness is necessary in this Order, hardness is critical to the assessment of the need for, and the development of, effluent limitations for certain metals. The *California Toxics Rule*, at (c)(4), states the following:

"Application of metals criteria. (i) *For purposes of calculating freshwater aquatic life criteria for metals from the equations in paragraph (b)(2) of this section, for waters with a hardness of 400 mg/L or less as calcium carbonate, the actual ambient hardness of the surface water* <u>*shall*</u> *be used in those equations*." [emphasis added]

The State Water Board, in footnote 19 to Water Quality Order No. 2004-0013, stated: "*We note that…the Regional Water Board…applied a variable hardness value whereby effluent limitations will vary depending on the actual, current hardness values in the receiving water. We recommend that the Regional Water Board establish either fixed or seasonal effluent limitations for metals, as provided in the SIP, rather than 'floating' effluent limitations*."

Effluent limitations for the discharge must be set to protect the beneficial uses of the receiving water for all discharge conditions. In the absence of the option of including condition-dependent, "floating" effluent limitations that are reflective of actual conditions at the time of discharge, effluent limitations must be set using a reasonable worst-case condition in order to protect beneficial uses for all discharge conditions. Given that there is no upstream flow under critical low flow conditions, the minimum effluent hardness value of 37 mg/L as $CaCO_3$ was used for purposes of establishing water quality-based effluent limitations.

c. **Assimilative Capacity/Mixing Zone.** The Regional Water Board finds that based on the available information and on the Discharger's application, that the unnamed tributary of Smuthers Ravine, absent the discharge, is an ephemeral

stream. The ephemeral nature of the unnamed tributary of Smuthers Ravine means that the designated beneficial uses must be protected, but that no credit for receiving water dilution is available. Although the discharge, at times, maintains the aquatic habitat, constituents may not be discharged that may cause harm to aquatic life. At other times, natural flows within unnamed tributary of Smuthers Ravine help support the aquatic life. Both conditions may exist within a short time span, where unnamed tributary of Smuthers Ravine would be dry without the discharge and periods when sufficient background flows provide hydraulic continuity with the North Fork of the American River (source to Folsom Lake). Dry conditions occur primarily in the summer months, but dry conditions may also occur throughout the year, particularly in low rainfall years. The lack of dilution results in more stringent effluent limitations to protect contact recreational uses, drinking water standards, agricultural water quality goals and aquatic life. Significant dilution may occur during and immediately following high rainfall events. The impact of assuming zero assimilative capacity within the receiving water is that discharge limitations are end-of-pipe limits with no allowance for dilution within the receiving water.

3. Determining the Need for WQBELs

a. CWA section 301 (b)(1) requires NPDES permits to include effluent limitations that achieve technology-based standards and any more stringent limitations necessary to meet water quality standards. Water quality standards include Regional Water Board Basin Plan beneficial uses and narrative and numeric water quality objectives, State Water Board-adopted standards, and federal standards, including the CTR and NTR. The Basin Plan includes numeric site-specific water quality objectives and narrative objectives for toxicity, chemical constituents, and tastes and odors. The narrative toxicity objective states: "*All waters shall be maintained free of toxic substances in concentrations that produce detrimental physiological responses in human, plant, animal, or aquatic life.*" (Basin Plan at III-8.00.) With regards to the narrative chemical constituents objective, the Basin Plan states that waters shall not contain chemical constituents in concentrations that adversely affect beneficial uses. At minimum, "…*water designated for use as domestic or municipal supply (MUN) shall not contain concentrations of chemical constituents in excess of the maximum contaminant levels (MCLs)*" in Title 22 of CCR. The narrative tastes and odors objective states: "*Water shall not contain taste- or odor-producing substances in concentrations that impart undesirable tastes or odors to domestic or municipal water supplies or to fish flesh or other edible products of aquatic origin, or that cause nuisance, or otherwise adversely affect beneficial uses.*"

b. Federal regulations require effluent limitations for all pollutants that are or may be discharged at a level that will cause or have the reasonable potential to cause, or contribute to an in-stream excursion above a narrative or numerical water quality standard. Based on information submitted as part of the application, in studies, and as directed by monitoring and reporting programs, the Regional Water Board finds that the discharge has a reasonable potential to cause or contribute to an

in-stream excursion above a water quality standard for aluminum, ammonia, bis (2-ethylhexyl) phthalate, chloride, chlorine (residual), copper, cyanide, electrical conductivity, iron, manganese, nitrate, 4,4-DDE, pathogens (total coliform), pH, settleable solids, turbidity, total dissolved solids, and toxicity. WQBELs for these constituents are included in this Order. A summary of the reasonable potential analysis (RPA) is provided in Attachment G, and a detailed discussion of the RPA for each constituent is provided below.

c. The Regional Water Board conducted the RPA in accordance with Section 1.3 of the SIP. Although the SIP applies directly to the control of CTR priority pollutants, the State Water Board has held that the Regional Water Board may use the SIP as guidance for water quality-based toxics control.[1] The SIP states in the introduction "*The goal of this Policy is to establish a standardized approach for permitting discharges of toxic pollutants to non-ocean surface waters in a manner that promotes statewide consistency.*" Therefore, in this Order the RPA procedures from the SIP were used to evaluate reasonable potential for both CTR and non-CTR constituents.

d. Unless otherwise noted, WQBELs were calculated in accordance with section 1.4 of the SIP, as described in Attachment F, Section IV.C.4.

e. **Aluminum.** USEPA developed *National Recommended Ambient Water Quality Criteria for Protection of Freshwater Aquatic Life* for aluminum. The recommended four-day average (chronic) and one-hour average (acute) criteria for aluminum are 87 µg/L and 750 µg/L, respectively, for waters with a pH of 6.5 to 9.0. USEPA recommends that the ambient criteria are protective of the aquatic beneficial uses of receiving waters in lieu of site-specific criteria. The receiving stream has been measured to have a low hardness—typically between 40 and 103 mg/L as $CaCO_3$. This condition is supportive of the applicability of the ambient water quality criteria for aluminum, according to USEPA's development document.

   The MEC for aluminum was 11.2 µg/L, based on four samples collected between 12 February 2002 and 19 November 2002, while the maximum observed upstream receiving water aluminum concentration was 96.3 µg/L, based on four samples collected between 12 February 2002 and 19 November 2002. Therefore, due to the fact that background receiving concentrations exceed applicable water quality criteria, and aluminum was detected in the discharge, there is a reasonable potential to cause or contribute to an in-stream excursion above a level necessary to protect aquatic life resulting in a violation of the Basin Plan's narrative toxicity objective. Since the receiving water exceeds the acute and chronic toxicity criteria, no assimilative capacity for aluminum is available and a dilution credit cannot be allowed. This Order contains final Average Monthly Effluent Limitations (AMEL) and Maximum Daily Effluent Limitations (MDEL) for aluminum of 71 µg/L and 143 µg/L, respectively, based on USEPA's

[1] See, Order WQO 2001-16 (Napa) and Order WQO 2004-0013 (Yuba City)

National Ambient Water Quality Criteria for the Protection of Freshwater Aquatic Life (see Attachment F, Table F-7 for WQBEL calculations).

In USEPA's *Ambient Water Quality Criteria for Aluminum—1988* [EPA 440/5-86-008], USEPA states that "[a]*cid-soluble aluminum…is probably the best measurement at the present…*"; however, USEPA has not yet approved an acid-soluble test method for aluminum. Replacing the ICP/AES portion of the analytical procedure with ICP/MS would allow lower detection limits to be achieved. Based on USEPA's discussion of aluminum analytical methods, this Order allows the use of the alternate aluminum testing protocol described above to meet monitoring requirements.

Based on the sample results in the effluent, it appears the Discharger can meet these new limitations.

f. **Ammonia.** Untreated domestic wastewater contains ammonia. Nitrification is a biological process that converts ammonia to nitrite and nitrite to nitrate. Denitrification is a process that converts nitrate to nitrite or nitric oxide and then to nitrous oxide or nitrogen gas, which is then released to the atmosphere. The Discharger does not currently use nitrification to remove ammonia from the waste stream. Inadequate or incomplete nitrification may result in the discharge of ammonia to the receiving stream. Ammonia is known to cause toxicity to aquatic organisms in surface waters. Discharges of ammonia would violate the Basin Plan narrative toxicity objective. Applying 40 CFR section122.44(d)(1)(vi)(B), it is appropriate to use USEPA's Ambient National Water Quality Criteria for the Protection of Freshwater Aquatic Life for ammonia, which was developed to be protective of aquatic organisms.

USEPA's *Ambient Water Quality Criteria for the Protection of Freshwater Aquatic Life*, for total ammonia, recommends acute (1-hour average; criteria maximum concentration or CMC) standards based on pH and chronic (30-day average, criteria continuous concentration or CCC) standards based on pH and temperature. USEPA also recommends that no 4-day average concentration should exceed 2.5 times the 30-day CCC. USEPA found that as pH increased, both the acute and chronic toxicity of ammonia increased. Salmonids were more sensitive to acute toxicity effects than other species. However, while the acute toxicity of ammonia was not influenced by temperature, it was found that invertebrates and young fish experienced increasing chronic toxicity effects with increasing temperature. Because the unnamed tributary of Smuthers Ravine has a beneficial use of cold freshwater habitat and the presence of salmonids and early fish life stages in the North Fork of the American River (source to Folsom Lake) is well-documented, the recommended criteria for waters where salmonids and early life stages are present were used.

The maximum permitted effluent pH is 8.5. The Basin Plan objective for pH in the receiving stream is the range of 6.5 to 8.5. In order to protect against the

worst-case short-term exposure of an organism, a pH value of 8.5 was used to derive the acute criterion. The resulting acute criterion is 2.14 mg/L.

Because Smuthers Ravine is an ephemeral stream and is sometimes dominated by the effluent, the maximum observed 30-day rolling average temperature and the maximum observed pH of the effluent were used to calculate the 30-day chronic criteria. The maximum observed 30-day average effluent temperature was 69.5°F (20.9°C), for the rolling 30-day periods ending 2 September 2005. The maximum observed effluent pH value was 8.07 on 12 March 2004. The maximum observed 30-day R-1 temperature was 56.3°F (13.5°C), for the 30-day periods ending August 2005. Using a pH value of 8.07 and the worst-case temperature value of 69.5°F (20.9°C) on a rolling 30-day basis, the resulting acute 30-day CCC is 1.46 mg/L (as N). The 4-day average concentration is derived in accordance with the USEPA criterion as 2.5 times the 30-day CCC. Based on the 30-day CCC of 1.45 mg/L(as N), the 4-day average concentration that should not be exceeded is 3.63 mg/L (as N).

The Regional Water Board calculates WQBELs in accordance with SIP procedures for non-CTR constituents, and ammonia is a non-CTR constituent. The SIP procedure assumes a 4-day averaging period for calculating the long-term average discharge condition (LTA). However, USEPA recommends modifying the procedure for calculating permit limits for ammonia using a 30-day averaging period for the calculation of the LTA corresponding to the 30-day chronic criteria. Therefore, while the LTAs corresponding to the acute and 4-day chronic criteria were calculated according to SIP procedures, the LTA corresponding to the 30-day chronic criteria was calculated assuming a 30-day averaging period. The lowest LTA representing the acute, 4-day average, and 30-day chronic criteria is then selected for deriving the average monthly effluent limitation (AMEL) and the maximum daily effluent limitation (MDEL). The remainder of the WQBEL calculation for ammonia was performed according to the SIP procedures.

The MEC for ammonia was 17.7 mg/L, based on four samples collected between 2 November 2002 and 1 April 2007, while the maximum observed upstream receiving water ammonia concentration was 2.43 mg/L, based on four samples collected between 12 February 2002 and 19 November 2002. Therefore, ammonia in the discharge has a reasonable potential to cause or contribute to an in-stream excursion above a level necessary to protect aquatic life resulting in a violation of the Basin Plan's narrative toxicity objective.

This Order contains a final AMEL and MDEL for ammonia of 0.8 mg/L and 2.1 mg/L, respectively, based on USEPA's *National Ambient Water Quality Criteria for the Protection of Freshwater Aquatic Life* (see Attachment F, Table F-8 for WQBEL calculations).

It appears that the Discharger may be in immediate non-compliance upon issuance of the permit. New or modified control measures may be necessary in order to comply with the effluent limitations, and the new or modified control

measures cannot be designed, installed and put into operation within 30 calendar days. As described in Section II.E above, the Discharger is planning on constructing a new wastewater treatment plant that includes biological nutrient removal by 1 January 2009. The Basin Plan for the Sacramento and San Joaquin River Basins includes a provision that authorizes the use of compliance schedules in NPDES permits for water quality objectives adopted after 25 September 1995 (see Basin Plan at page IV-16). The WQBELs for ammonia are based on a new interpretation of the narrative standard for protection of receiving water beneficial uses. Therefore, a compliance schedule for compliance with the ammonia effluent limitations is established in the Order.

An interim performance-based maximum daily effluent limitation of 16.1 mg/L has been established in this Order. The interim limitation was determined as described in Attachment F, Section IV.E.3., and is in effect until **31 December 2008**. As part of the compliance schedule, this Order requires the Discharger to submit a corrective action plan and implementation schedule to assure compliance with the final ammonia effluent limitations. In addition, the Discharger shall prepare and implement a pollution prevention plan that is in compliance with CWC section 13263.3(d)(3).

g. **Bis (2-ethylhexyl) phthalate.** Bis (2-ethyl-hexyl) phthalate is used primarily as one of several plasticizers in polyvinyl chloride (PVC) resins for fabricating flexible vinyl products. According to the Consumer Product Safety Commission, USEPA, and the Food and Drug Administration, these PVC resins are used to manufacture many products, including soft squeeze toys, balls, raincoats, adhesives, polymeric coatings, components of paper and paperboard, defoaming agents, animal glue, surface lubricants, and other products that must stay flexible and non-injurious for the lifetime of their use. The State Maximum Contaminant Level (MCL) for bis (2 ethylhexyl) phthalate is 4 µg/L and the USEPA MCL is 6 µg/L. The NTR criterion for Human health protection for consumption of water and aquatic organisms is 1.8 µg/L and for consumption of aquatic organisms only is 5.9 µg/L.

The MEC for bis (2-ethyl-hexyl) phthalate was 2 µg/L, based on five samples collected between 12 February 2002 and 12 December 2003, while the maximum observed upstream receiving water bis (2-ethyl-hexyl) phthalate concentration was 3 µg/L, based on four samples collected between 12 February 2002 and 19 November 2002. Therefore, the discharge has a reasonable potential to cause or contribute to an in-stream excursion above the NTR criterion for bis (2-ethylhexyl) phthalate.

The arithmetic mean of the receiving water bis (2-ethylhexyl) phthalate concentrations is 4.5 µg/L. The receiving water concentration has exceeded the criterion; therefore, there is no assimilative capacity for bis (2-ethylhexyl) phthalate and the NTR criterion must be met at the point of discharge. This Order includes an AMEL and MDEL for bis (2-ethylhexyl) phthalate of 1.8 µg/L and 3.6 µg/L, respectively, based on the NTR criterion for the protection of

human health (see Attachment F, Table F-9 for WQBEL calculations). Based on the sample results for the effluent provided in the Infeasibility Report submitted by the Discharger on 21 February 2007, it appears the Discharger can meet these new limitations.

h. **Chlorine Residual.** The Discharger uses chlorine for disinfection, which is extremely toxic to aquatic organisms. The Discharger uses sodium bisulfite to dechlorinate the effluent prior to discharge to the unnamed tributary of Smuthers Ravine. Due to the existing chlorine use and the potential for chlorine to be discharged, the discharge has a reasonable potential to cause or contribute to an in-stream excursion above the Basin Plan's narrative toxicity objective.

   The USEPA *Technical Support Document for Water Quality-based Toxics Control* [EPA/505/2-90-001] contains statistical methods for converting chronic (4-day) and acute (1-hour) aquatic life criteria to average monthly and maximum daily effluent limitations based on the variability of the existing data and the expected frequency of monitoring. However, because chlorine is an acutely toxic constituent that can and will be monitored continuously, an average 1-hour limitation is considered more appropriate than an average daily limitation. Average 1-hour and 4-day limitations for chlorine, based on these criteria, are included in this Order. The Discharger can immediately comply with these new effluent limitations for chlorine residual.

   The Facility discharges to the unnamed tributary of Smuthers Ravine. The chlorine residual limitations required in this Order are protective of aquatic organisms in the undiluted discharge. If compliance is maintained, the Regional Water Board does not anticipate residual chlorine impacts to benthic organisms.

i. **4,4-DDE.** (See Persistent Chlorinated Hydrocarbon Pesticides).

j. **Copper.** The CTR includes hardness-dependent criteria for the protection of freshwater aquatic life for copper. The criteria for copper are presented in dissolved concentrations. USEPA recommends conversion factors to translate dissolved concentrations to total concentrations. The USEPA default conversion factors for copper in freshwater are 0.96 for both the acute and the chronic criteria. Using the worst-case measured hardness from the effluent (37 mg/L as $CaCO_3$) and the USEPA recommended dissolved-to-total translator, the applicable chronic criterion (maximum four-day average concentration) is 5.49 µg/L and the applicable acute criterion (maximum one-hour average concentration) is 3.99 µg/L, as total recoverable.

   The MEC for total copper was 5.7 µg/L, based on 6 samples collected between 21 May 2002 and 1 March 2007, while the maximum observed upstream receiving water total copper concentration was 2.4 µg/L, based on 4 samples collected between 21 May 2002 and 19 November 2002. Therefore, the discharge has a reasonable potential to cause or contribute to an in-stream excursion above the CTR criteria for copper. An AMEL and MDEL for total

copper of 2.7 µg/L and 5.5 µg/L, respectively, are included in this Order based on CTR criteria for the protection of freshwater aquatic life (See Attachment F, Table F-10 for WQBEL calculations).

The Discharger is unable to comply with these limitations. Section 2.1 of the SIP allows for compliance schedules within the permit for existing discharges where it is demonstrated that it is infeasible for a Discharger to achieve immediate compliance with a CTR criterion. Using the statistical methods for calculating interim effluent limitations described in Attachment F, Section IV.D.1., an interim performance-based maximum daily limitation of 17.7 µg/L was calculated.

The Discharger submitted a compliance schedule justification for copper on 1 October 2007. The compliance schedule justification included all items specified in Paragraph 3, items (a) through (d), of section 2.1 of the SIP. As this compliance schedule is greater than 1 year, the Discharger shall submit semi-annual progress reports in accordance with the Monitoring and Reporting Program (Attachment E, Section X.D.1.) The new water quality-based effluent limitations for copper become effective **1 January 2009**.

This Order requires the Discharger to submit a corrective action plan and implementation schedule to assure compliance with the final copper effluent limitations. The interim effluent limitations are in effect up to **31 December 2008**. As part of the compliance schedule for copper, the Discharger shall develop and implement a pollution prevention program in compliance with CWC section 13263.3(d)(3).

k. **Cyanide.** The CTR includes maximum 1-hour average and 4-day average cyanide concentrations of 22 µg/L and 5.2 µg/L, respectively, for the protection of freshwater aquatic life. The MEC for cyanide was 12 µg/L, based on six samples collected between 12 February 2002 and 12 December 2003, while the maximum observed upstream receiving water cyanide concentration was 39 µg/L, based on four samples collected between 12 February 2002 and 19 November 2002. Therefore, the discharge has a reasonable potential to cause or contribute to an in-stream excursion above the CTR criteria for cyanide. No dilution is allowed due to periods of no flow in the receiving water. An AMEL and MDEL for cyanide of 4.3 µg/L and 8.5 µg/L, respectively, are included in this Order based on CTR criteria for the protection of freshwater aquatic life (see Attachment F, Table F-10 for WQBEL calculations). Based on the sample results for the effluent provided in the Infeasibility Report submitted by the Discharger on 21 February 2007, it appears the Discharger can meet these new limitations.

l. **Electrical Conductivity. (see Subsection s. Salinity)**

m. **Iron.** The Secondary MCL - Consumer Acceptance Limit for iron is 300 µg/L. The MEC for iron was 3690 µg/L, based on four samples collected between 12 February 2002 and 19 November 2002, while the maximum observed upstream receiving water iron concentration was 2660 µg/L, based on four samples collected between 12 February 2002 and 19 November 2002.

Therefore, the discharge has a reasonable potential to cause or contribute to an in-stream excursion above the Secondary MCL for iron. The receiving water has exceeded the Secondary MCL for iron. Therefore, no assimilative capacity is available in the receiving water for iron. An annual average effluent limitation of 300 µg/L for iron is included in this Order based on protection of the Basin Plan's narrative chemical constituents objective. Based on the sample results for the effluent provided in the Infeasibility Report submitted by the Discharger on 21 February 2007, it appears the Discharger can meet these new limitations.

n. **Manganese*.*** The Secondary MCL - Consumer Acceptance Limit for manganese is 50 µg/L. The MEC for manganese was 2310 µg/L, based on four samples collected between 12 February 2002 and 19 November 2002, while the maximum observed upstream receiving water manganese concentration was 2180 µg/L, based on four samples collected between 12 February 2002 and 19 November 2002. Therefore, the discharge has a reasonable potential to cause or contribute to an in-stream excursion above the Secondary MCL for manganese. The receiving water has exceeded the Secondary MCL for manganese. Therefore, no assimilative capacity is available in the receiving water for manganese. An annual average effluent limitation of 50 µg/L for manganese is included in this Order based on protection of the Basin Plan's narrative chemical constituents objective. Based on the sample results in the effluent, it appears the Discharger can meet this new limitation.

o. **Mercury*.*** The current USEPA Ambient Water Quality Criteria for Protection of Freshwater Aquatic Life, continuous concentration, for mercury is 0.77 µg/L (30-day average, chronic criteria). The CTR contains a human health criterion (based on a one-in-a-million cancer risk) of 0.050 µg/L for waters from which both water and aquatic organisms are consumed. Both values are controversial and subject to change. In 40 CFR Part 131, USEPA acknowledges that the human health criteria may not be protective of some aquatic or endangered species and that "…*more stringent mercury limits may be determined and implemented through use of the State's narrative criterion.*" In the CTR, USEPA reserved the mercury criteria for freshwater and aquatic life and may adopt new criteria at a later date. The maximum observed effluent mercury concentration was 0.015 µg/L. The Sacramento River has been listed as an impaired water body pursuant to Section 303(d) of the Clean Water Act because of mercury. Mercury bioaccumulates in fish tissue and, therefore, discharge of mercury to the receiving water is may contribute to exceedances of the narrative toxicity objective and impacts on beneficial uses in the Delta. Thus, the discharge of mercury to the surface waters in the Central Valley are being limited. This Order contains an interim performance-based mass effluent limitation of 0.000761 lbs/month for mercury for the effluent discharged to the receiving water. This limitation is based on maintaining the mercury loading at the current level until a total maximum daily load (TMDL) can be established and USEPA develops mercury standards that are protective of human health. The mass limitation was derived using the maximum observed effluent mercury concentration and the design average daily flow rate of the current treatment plant:

Effluent concentration (mg/L) * Design average daily flow rate * 8.34 (conversion factor) * [365 days / 12 months] = Pounds per month

If USEPA develops new water quality standards for mercury, this permit may be reopened and the effluent limitations adjusted.

p. **Nitrate.** Untreated domestic wastewater contains ammonia. Nitrification is a biological process that converts ammonia to nitrite and nitrite to nitrate. Denitrification is a process that converts nitrate to nitrite or nitric oxide and then to nitrous oxide or nitrogen gas, which is then released to the atmosphere. Nitrate is known to cause adverse health effects in humans. The California DHS has adopted a Primary MCL at Title 22 of the California Code of Regulations (CCR), Table 64431-A, for the protection of human health for nitrate that is equal 10 mg/L (measured as nitrogen).

USEPA has developed Drinking Water Standards (10,000 µg/L as Primary Maximum Contaminant Level) and Ambient Water Quality Criteria for protection of human health (10,000 µg/L for non-cancer health effects) for nitrate. Recent toxicity studies have indicated a possibility that nitrate is toxic to aquatic organisms.

Inadequate or incomplete denitrification may result in the discharge of nitrate to the receiving stream. The conversion of ammonia to nitrites and the conversion of nitrites to nitrates present a reasonable potential for the discharge to cause or contribute to an in-stream excursion above the Primary MCL for nitrate. An AMEL for nitrate of 10 mg/L is included in this Order based on the MCLs. This effluent limitation is included in this Order to assure the treatment process adequately nitrifies and denitrifies the waste stream to protect the beneficial use of municipal and domestic supply.

There is very limited effluent data available for nitrate. However, the Regional Water Board expects that as a result of the requirement to nitrify to the maximum extent practicable to meet effluent limitations for ammonia, that nitrate effluent concentrations will increase. Therefore, the Regional Water Board expects that the Discharger will have trouble complying with the final effluent limitation for nitrate. New or modified control measures may be necessary in order to comply with the effluent limitations, and the new or modified control measures cannot be designed, installed, and put into operation within 30 calendar days. As described in Section II.E above, the Discharger is planning on constructing a new wastewater treatment plant that includes biological nutrient removal by 1 January 2009. The WQBELs for nitrate are based on the chemical constituents objective in the Basin Plan.

q. **Persistent Chlorinated Hydrocarbon Pesticides.** 4,4-DDE was detected in the effluent in concentrations as high as 0.013 µg/L. This constituent is a persistent chlorinated hydrocarbon pesticide. The Basin Plan requires that no individual pesticides shall be present in concentrations that adversely affect beneficial uses; discharges shall not result in pesticide concentrations in bottom sediments

or aquatic life that adversely affect beneficial uses; total chlorinated hydrocarbon pesticides shall not be present in the water column at detectable concentrations; and pesticide concentrations shall not exceed those allowable by applicable antidegradation policies. The CTR contains numeric criteria for 4,4-DDE of 0.00059 µg/L for freshwaters from which both water and organisms are consumed. The detection of 4,4-DDE at 0.013 µg/L in the effluent presents a reasonable potential to exceed the Basin Plan limitations for chlorinated hydrocarbon pesticides and the CTR criteria for 4,4-DDE. In addition to 4,4-DDE, chlorinated hydrocarbon pesticides include beta BHC, delta BHC, 4,4-DDD, 4,4-DDT, chlordane, dieldrin, endrin, endrin aldehyde, alpha endosulfan, endosulfan sulfate, heptachlor, heptachlor epoxide, and toxaphene. Effluent Limitations for persistent chlorinated hydrocarbon pesticides are included in this Order and are based on the Basin Plan objective of no detectable concentrations of chlorinated hydrocarbon pesticides. Since the Basin Plan objective is no detectable concentrations, there can be no assimilative capacity. The limitation for chlorinated hydrocarbon pesticides is included in this Order based on reasonable potential to cause or contribute to an in-stream excursion of the water quality objective.

r. **Pathogens**. The beneficial uses of the unnamed tributary of Smuthers Ravine include municipal and domestic supply, water contact recreation, and agricultural irrigation supply, and there is, at times, less than 20:1 dilution. To protect these beneficial uses, the Regional Water Board finds that the wastewater must be disinfected and adequately treated to prevent disease. The principal infectious agents (pathogens) that may be present in raw sewage may be classified into three broad groups: bacteria, parasites, and viruses. Tertiary treatment, consisting of chemical coagulation, sedimentation, and filtration, has been found to remove approximately 99.5 percent of viruses. Filtration is an effective means of reducing viruses and parasites from the waste stream. The wastewater must be treated to tertiary standards (filtered), or equivalent, to protect contact recreational and food crop irrigation uses.

The California Department of Health Services (DHS) has developed reclamation criteria, CCR, Division 4, Chapter 3 (Title 22), for the reuse of wastewater. Title 22 requires that for spray irrigation of food crops, parks, playgrounds, schoolyards, and other areas of similar public access, wastewater be adequately disinfected, oxidized, coagulated, clarified, and filtered, and that the effluent total coliform levels not exceed 2.2 MPN/100 m/ as a 7-day median. As coliform organisms are living and mobile, it is impracticable to quantify an exact number of coliform organisms and to establish weekly average limitations. Instead, coliform organisms are measured as a most probable number and regulated based on a 7-day median limitation.

Title 22 also requires that recycled water used as a source of water supply for non-restricted recreational impoundments be disinfected tertiary recycled water that has been subjected to conventional treatment. A non-restricted recreational impoundment is defined as "*…an impoundment of recycled water, in which no*

limitations are imposed on body-contact water recreational activities." Title 22 is not directly applicable to surface waters; however, the Regional Water Board finds that it is appropriate to apply an equivalent level of treatment to that required by DHS's reclamation criteria because the receiving water is used for irrigation of agricultural land and for contact recreation purposes. The stringent disinfection criteria of Title 22 are appropriate since the undiluted effluent may be used for the irrigation of food crops and/or for body-contact water recreation. Coliform organisms are intended as an indicator of the effectiveness of the entire treatment train and the effectiveness of removing other pathogens. The method of treatment is not prescribed by this Order; however, wastewater must be treated to a level equivalent to that recommended by DHS.

In addition to coliform testing, a turbidity effluent limitation has been included as a second indicator of the effectiveness of the treatment process and to assure compliance with the required level of treatment. The tertiary treatment process, or equivalent, is capable of reliably meeting a turbidity limitation of 2 nephelometric turbidity units (NTU) as a daily average. Failure of the filtration system such that virus removal is impaired would normally result in increased particles in the effluent, which result in higher effluent turbidity. Turbidity has a major advantage for monitoring filter performance, allowing immediate detection of filter failure and rapid corrective action. Coliform testing, by comparison, is not conducted continuously and requires several hours, to days, to identify high coliform concentrations. Therefore, to ensure compliance with the DHS recommended Title 22 disinfection criteria, weekly average effluent limitations are impracticable for turbidity.

WDRs Order No. 5-01-180 required a tertiary level of treatment or equivalent be provided or all discharges contained on land by 14 June 2006 and included effluent limitations commensurate with tertiary treatment. CDO No. 5-01-181 adopted by the Regional Water Board at the same time provided the time schedule for the City to evaluate alternatives and provide the required level of treatment if a surface water discharge was to continue. In adopting Order No. 5-01-180 and requiring a tertiary level of treatment, the Regional Water Board considered the costs of providing the additional treatment. At that time, the projected costs for adding tertiary treatment (coagulation, flocculation, and filtration or equivalent) were estimated in that Order to be $298,000.

The City has evaluated alternatives to a continued surface water discharge, has constructed an interim tertiary treatment facility to comply with effluent limitations and is in the process of designing and funding a final tertiary treatment facility to provide Title 22 tertiary treatment or equivalent.

Consequently, this Order continues to require a tertiary level of treatment, or equivalent, and includes effluent limitations necessary to protect the beneficial uses of the receiving water. In accordance with CWC section 13241, the Regional Water Board has considered the following:

i. The past, present and probable future beneficial uses of the receiving stream include municipal and domestic supply, agricultural irrigation, body contact water recreation, other non-body contact water recreation, warm freshwater aquatic habitat, cold freshwater aquatic habitat, cold spawning habitat, and wildlife habitat.

ii. The environmental characteristics of the hydrographic unit, including the quality of the available water, will be improved by the requirement to provide tertiary treatment for this wastewater discharge. Tertiary treatment will allow for the reuse of the undiluted wastewater for food crop irrigation and contact recreation activities that would otherwise be unsafe according to recommendations from the California Department of Health Services (DHS).

iii. Fishable and swimmable water quality conditions can be reasonably achieved through the coordinated control of all factors that affect water quality in the area.

iv. The economic impact of requiring an increased level of treatment has been considered. Since January 2003, the City has expended approximately $2.1 million for studies, reports and construction of the interim tertiary facility. Monthly sewer charges have increased from $25.46/EDU in January 2003 to $60.00/EDU in September 2006. The estimated capital cost for construction of the new tertiary treatment facility is $9.4 million. Recent information from the Discharger indicates that monthly sewer charges may go up to $80/month/EDU by 2014/2015. The new facility is being designed and is necessary to provide treatment for constituents other than those necessary to comply with Title 22 tertiary or equivalent. The costs cited above also include expenditures to address runoff controls and changing from seasonal to year around NDPES disposal. Consequently, the cost to only provide the Title 22 or equivalent treatment would be much less. The loss of beneficial uses within downstream waters, without the tertiary treatment requirement, which includes prohibiting the irrigation of food crops and prohibiting public access for contact recreational purposes, would have a detrimental economic impact. In addition to pathogen removal to protect irrigation and recreation, tertiary treatment may also aid in meeting discharge limitations for other pollutants, such as heavy metals, reducing the need for advanced treatment specific for those pollutants.

v. The requirement to provide tertiary treatment for this discharge will not adversely impact the need for housing in the area. The potential for developing housing in the area will be facilitated by improved water quality, which protects the contact recreation and irrigation uses of the receiving water. DHS recommends that, in order to protect the public health, relatively undiluted wastewater effluent must be treated to a tertiary level for contact recreational and food crop irrigation uses. Without tertiary treatment, the downstream waters could not be safely utilized for contact recreation or the irrigation of food crops.

vi. It is the Regional Water Board's policy, (Basin Plan, page IV-12.00, Policy 2) to encourage the reuse of wastewater. The Regional Water Board requires dischargers to evaluate how reuse or land disposal of wastewater can be optimized. The need to develop and use recycled water is facilitated by providing a tertiary level of wastewater treatment that will allow for a greater variety of uses in accordance with CCR, Title 22.

vii. The Regional Water Board has considered the factors specified in CWC section 13263, including considering the provisions in CWC section 13241, in adopting the disinfection and filtration requirements under Title 22 criteria. The Regional Water Board finds, on balance, that these requirements are necessary to protect the beneficial uses of the unnamed tributary of Smuthers Ravine, including water contact recreation and irrigation uses.

This Order includes tertiary effluent limitations based on protecting the beneficial uses of non-restricted contact recreation and irrigation in the unnamed tributary of Smuthers Ravine and the North Fork of the American River.

s. **pH.** The Basin Plan includes a water quality objective for surface waters (except for Goose Lake) that the "…*pH shall not be depressed below 6.5 nor raised above 8.5. Changes in normal ambient pH levels shall not exceed 0.5 in fresh waters with designated COLD or WARM beneficial uses.*" Effluent Limitations for pH are included in this Order based on the Basin Plan objectives for pH.

t. **Salinity.** The discharge contains total dissolved solids (TDS), chloride, sulfate, and electrical conductivity (EC). These are water quality parameters that are indicative of the salinity of the water. Their presence in water can be growth limiting to certain agricultural crops and can affect the taste of water for human consumption. There are no USEPA water quality criteria for the protection of aquatic organisms for these constituents. The Basin Plan contains a chemical constituent objective that incorporates State MCLs and contains a narrative objective.

Table F-6. Salinity Water Quality Criteria/Objectives

Parameter	Agricultural WQ Goal[1]	Secondary MCL[3]	Effluent	
			Avg	Max
EC (µmhos/cm)	Varies[2]	900, 1600, 2200	445	993
TDS (mg/L)	450[2]	500, 1000, 1500	390	590
Sulfate (mg/L)	Varies	250, 500, 600	5.2	7.6
Chloride (mg/L)	Varies[2]	250, 500, 600	32	43

1 Agricultural water quality goals based on *Water Quality for Agriculture*, Food and Agriculture Organization of the United Nations—Irrigation and Drainage Paper No. 29, Rev. 1 (R.S. Ayers and D.W. Westcot, Rome, 1985)

2 The EC level in irrigation water that harms crop production depends on the crop type, soil type, irrigation methods, rainfall, and other factors. However, many crops are grown successfully with higher salinities.

3 The secondary MCLs are stated as a recommended level, upper level, and a short-term maximum level.

i. **Chloride**. The secondary MCL for chloride is 250 mg/L, as recommended level, 500 mg/L as an upper level, and 600 mg/L as a short-term maximum. The recommended agricultural water quality goal for chloride, that would apply the narrative chemical constituent objective, is 106 mg/L as a long-term average based on Water Quality for Agriculture, Food and Agriculture Organization of the United Nations—Irrigation and Drainage Paper No. 29, Rev. 1 (R.S. Ayers and D.W. Westcot, Rome, 1985). The 106 mg/L water quality goal is intended to protect against adverse effects on sensitive crops when irrigated via sprinklers.

Chloride concentrations in the effluent ranged from 17 mg/L to 43 mg/L, with an average of 32 mg/L, for four samples collected by the Discharger from 12 February 2002 through 19 November 2002. Background concentrations in the unnamed tributary of Smuthers Ravine ranged from 20 mg/L to 33 mg/L, with an average of 29 mg/L, for four samples collected by the Discharger from 12 February 2002 through 19 November 2002.

ii. **Electrical Conductivity (EC)**. The secondary MCL for EC is 900 µmhos/cm as a recommended level, 1600 µmhos/cm as an upper level, and 2200 µmhos/cm as a short-term maximum. The agricultural water quality goal, that would apply the narrative chemical constituents objective, is 700 µmhos/cm as a long-term average based on Water Quality for Agriculture, Food and Agriculture Organization of the United Nations—Irrigation and Drainage Paper No. 29, Rev. 1 (R.S. Ayers and D.W. Westcot, Rome, 1985). The 700 µmhos/cm agricultural water quality goal is intended to prevent reduction in crop yield, i.e. a restriction on use of water, for salt-sensitive crops, such as beans, carrots, turnips, and strawberries. These crops are either currently grown in the area or may be grown in the future. Most other crops can tolerate higher EC concentrations without harm, however, as the salinity of the irrigation water increases, more crops are potentially harmed by the EC, or extra measures must be taken by the farmer to minimize or eliminate any harmful impacts.

A review of the Discharger's monitoring reports from January 2004 through August 2005 shows an average effluent EC of 445 µmhos/cm, with a range from 203 µmhos/cm to 993 µmhos/cm for 284 samples. These data show that on average, the effluent does not exceed the most stringent criterion applied as a screening value. The background receiving water EC averaged 285 µmhos/cm in four sampling events collected by the Discharger from 12 February 2002 through 19 November 2002.

iii. **Sulfate**. The secondary MCL for sulfate is 250 mg/L as recommended level, 500 mg/L as an upper level, and 600 mg/L as a short-term maximum. Sulfate concentrations in the effluent ranged from 2.24 mg/L to 7.6 mg/L, with an average of 5.2 mg/L, for four samples collected by the Discharger from 12 February 2002 through 19 November 2002. Background concentrations in the unnamed tributary of Smuthers Ravine ranged from 4 mg/L to 9.4 mg/L,

with an average of 7 mg/L, for four samples collected by the Discharger from 12 February 2002 through 19 November 2002.

iv. **Total Dissolved Solids (TDS).** The secondary MCL for TDS is 500 mg/L as a recommended level, 1000 mg/L as an upper level, and 1500 mg/L as a short-term maximum. The recommended agricultural water quality goal for TDS, that would apply the narrative chemical constituent objective, is 450 mg/L as a long-term average based on Water Quality for Agriculture, Food and Agriculture Organization of the United Nations—Irrigation and Drainage Paper No. 29, Rev. 1 (R.S. Ayers and D.W. Westcot, Rome, 1985). Water Quality for Agriculture evaluates the impacts of salinity levels on crop tolerance and yield reduction, and establishes water quality goals that are protective of the agricultural uses. The 450 mg/L water quality goal is intended to prevent reduction in crop yield, i.e. a restriction on use of water, for salt-sensitive crops. Only the most salt sensitive crops require irrigation water of 450 mg/L or less to prevent loss of yield. Most other crops can tolerate higher TDS concentrations without harm, however, as the salinity of the irrigation water increases, more crops are potentially harmed by the TDS, or extra measures must be taken by the farmer to minimize or eliminate any harmful impacts.

The average TDS effluent concentration was 390 mg/L and ranged from 84 mg/L to 590 mg/L. These data show that on average, the effluent does not exceed the most stringent criterion applied as a screening value. The background receiving water TDS ranged from 90 mg/L to 190 mg/L, with an average of 139 mg/L in four sampling events performed by the Discharger from 12 February 2002 through 19 November 2002.

v. **Salinity Effluent Limitations.** Effluent limitations based on the MCL or the agricultural water quality goal would likely require construction and operation of a reverse osmosis treatment plant. The State Water Board, in Water Quality Order 2005-005 (for the City of Manteca), states, *"…the State Board takes official notice [pursuant to Title 23 of California Code of Regulations, Section 648.2] of the fact that operation of a large-scale reverse osmosis treatment plant would result in production of highly saline brine for which an acceptable method of disposal would have to be developed. Consequently, any decision that would require use of reverse osmosis to treat the City's municipal wastewater effluent on a large scale should involve thorough consideration of the expected environmental effects."* The State Water Board states in that Order, "*Although the ultimate solutions to southern Delta salinity problems have not yet been determined, previous actions establish that the State Board intended for permit limitations to play a limited role with respect to achieving compliance with the EC water quality objectives in the southern Delta.*" The State Water Board goes on to say, "*Construction and operation of reverse osmosis facilities to treat discharges…prior to implementation of other measures to reduce the salt load in the southern Delta, would not be a reasonable approach.*"

The Regional Water Board, with cooperation of the State Water Board, has begun the process to develop a new policy for the regulation of salinity in the Central Valley. In a statement issued at the 16 March 2006, Regional Water Board meeting, Board Member Dr. Karl Longley recommended that the Regional Water Board continue to exercise its authority to regulate discharges of salt to minimize salinity increases within the Central Valley. Dr. Longley stated, "*The process of developing new salinity control policies does not, therefore, mean that we should stop regulating salt discharges until a salinity Policy is developed. In the meantime, the Board should consider all possible interim approaches to continue controlling and regulating salts in a reasonable manner, and encourage all stakeholder groups that may be affected by the Regional Board's policy to actively participate in policy development.*"

The Antidegradation Policy (Resolution No. 68-16) requires that the Discharger implement best practicable treatment or control (BPTC) of its discharge. For salinity, the Regional Water Board is considering limiting effluent salinity of municipal wastewater treatment plants to an increment of 500 µmhos/cm over the salinity of the municipal water supply as representing BPTC. This Order includes an interim performance-based effluent limitation of 993 µmhos/cm for EC to protect the receiving water from further salinity degradation, but no final effluent limitation because sufficient information does not exist for the water supply for the Discharger. Final effluent limitations for salinity based on BPTC will be established subsequent to the collection and analysis by the Discharger of EC in the Discharger's water supply. This Order requires quarterly monitoring of EC and TDS of the Discharger's water supply (see Attachment E, Section IX.A).

This Order also requires the Discharger to implement salinity reduction measures to reduce the salinity in its discharge to the unnamed tributary of Smuthers Ravine. Specifically, Special Provision VI.C.3.b. of this Order requires the Discharger to prepare and implement a Salinity Evaluation and Minimization Plan for salinity, and Special Provision VI.C.3.c requires the Discharger to report on progress in reducing salinity discharges to the unnamed tributary of Smuthers Ravine. Implementation measures to reduce salt loading may include source control, mineralization reduction, chemical addition reductions, changing to water supplies with lower salinity, and limiting the salt load from domestic and industrial dischargers. Compliance with these requirements will result in a salinity reduction in the effluent discharged to the receiving water.

u. **Settleable Solids.** For inland surface waters, the Basin Plan states that "[w]ater shall not contain substances in concentrations that result in the deposition of material that causes nuisance or adversely affects beneficial uses." This Order contains average monthly and average daily effluent limitations for settleable solids.

Because the amount of settleable solids is measured in terms of volume per volume without a mass component, it is impracticable to calculate mass limitations for inclusion in this Order. A daily maximum effluent limitation for settleable solids is included in the Order, in lieu of a weekly average, to ensure that the treatment works operate in accordance with design capabilities.

v. **Total Dissolved Solids.** (See Salinity).

w. **Toxicity.** See Section IV.C.5. of the Fact Sheet regarding whole effluent toxicity.

4. WQBEL Calculations

a. As discussed in Section IV.C.3 above, effluent limitations based on primary MCLs were applied as AMELs for nitrate. Effluent limitations based on secondary MCLs were applied as annual averages for iron and manganese. Effluent limitations for dissolved oxygen, chlorine residual, persistent chlorinated hydrocarbon pesticides, pathogens, pH, and temperature were based on Basin Plan objectives and applied directly as effluent limitations.

b. Effluent limitations for aluminum, ammonia, bis (2-ethylhexyl) phthalate, and cyanide were calculated in accordance with section 1.4 of the SIP. The following paragraphs describe the methodology used for calculating effluent limitations.

c. **Effluent Limitation Calculations.** In calculating maximum effluent limitations, the effluent concentration allowances were set equal to the criteria/standards/objectives.

$$ECA_{acute} = CMC \qquad ECA_{chronic} = CCC$$

For the human health, agriculture, or other long-term criterion/objective, a dilution credit can be applied. The ECA is calculated as follows:

$$ECA_{HH} = HH + D(HH - B)$$

where:

ECA_{acute} = effluent concentration allowance for acute (one-hour average) toxicity criterion

$ECA_{chronic}$ = effluent concentration allowance for chronic (four-day average) toxicity criterion

ECA_{HH} = effluent concentration allowance for human health, agriculture, or other long-term criterion/objective

CMC = criteria maximum concentration (one-hour average)

CCC = criteria continuous concentration (four-day average, unless otherwise noted)

HH = human health, agriculture, or other long-term criterion/objective

D = dilution credit

B = maximum receiving water concentration

Acute and chronic toxicity ECAs were then converted to equivalent long-term averages (LTA) using statistical multipliers and the lowest is used. Additional statistical multipliers were then used to calculate the maximum daily effluent limitation (MDEL) and the average monthly effluent limitation (AMEL).

Human health ECAs are set equal to the AMEL and a statistical multiplier is used to calculate the MDEL.

$$AMEL = mult_{AMEL}\left[\min\left(\overbrace{M_A ECA_{acute}}^{LTA_{acute}}, M_C ECA_{chronic}\right)\right]$$

$$MDEL = mult_{MDEL}\left[\min\left(M_A ECA_{acute}, \underbrace{M_C ECA_{chronic}}_{LTA_{chronic}}\right)\right]$$

$$MDEL_{HH} = \left(\frac{mult_{MDEL}}{mult_{AMEL}}\right) AMEL_{HH}$$

where: $mult_{AMEL}$ = statistical multiplier converting minimum LTA to AMEL
$mult_{MDEL}$ = statistical multiplier converting minimum LTA to MDEL
M_A = statistical multiplier converting CMC to LTA
M_C = statistical multiplier converting CCC to LTA

Water quality-based effluent limitations were calculated for aluminum, ammonia, bis (2-ethylhexyl) phthalate, copper, and cyanide as follows in Tables F-7 through F-11, below.

Table F-7. WQBEL Calculations for Aluminum

	Acute	Chronic	Human Health
Criteria (µg/L) (1)	750	87	200
Dilution Credit	No Dilution	No Dilution	No Dilution
ECA	750	87	200
ECA Multiplier	0.32	0.53	--
LTA	241	46	--
AMEL Multiplier (95th%)	(2)	1.55	--
AMEL (µg/L)	(2)	**71**	**200**
MDEL Multiplier (99th%)	(2)	3.11	2.01
MDEL (µg/L)	(2)	**143**	**402**

(1)-USEPA Ambient Water Quality Criteria
(2)-Limitations based on chronic LTA (Chronic LTA < Acute LTA)

Table F-8. WQBEL Calculations for Ammonia

	Acute	Chronic (4-day)	Chronic (30-day)	Human Health
Criteria (mg/L) (1)	2.14	3.63	1.45	1.5
Dilution Credit	No Dilution	No Dilution	No Dilution	No Dilution
ECA	2.14	3.63	1.45	1.5
ECA Multiplier	0.2	0.36	0.66	--
LTA	0.42	1.31	0.95	--
AMEL Multiplier (95th%)	1.98	(2)	(3)	--
AMEL (mg/L)	0.8	(2)	**(3)**	**1.5**
MDEL Multiplier (99th%)	5.07	(2)	(3)	2.01
MDEL (mg/L)	2.1	(2)	**(3)**	**3.0**

(1)-USEPA Ambient Water Quality Criteria
(2)-Limitations based on acute LTA (Acute LTA < Chronic (4-day) LTA)
(3)-Limitations based on acute LTA [Acute LTA < Chronic (30-day) LTA]

Table F-9. WQBEL Calculations for Bis (2-ethylhexyl) phthalate

	Human Health
Criteria (µg/L)	1.8
Dilution Credit	No Dilution
ECA	1.8
AMEL (µg/L)	**1.8**
MDEL Multiplier (99th%)	2.01
MDEL (µg/L)	**3.6**

Table F-10. WQBEL Calculations for Copper

	Acute	Chronic	Human Health
Criteria (µg/L)	5.49	3.99	200
Dilution Credit	No Dilution	No Dilution	No Dilution
ECA	5.49	3.99	200
ECA Multiplier	0.32	0.53	--
LTA	1.76	2.10	--
AMEL Multiplier (95th%)	1.55	(1)	--
AMEL (µg/L)	2.74	(1)	**200**
MDEL Multiplier (99th%)	3.11	(1)	2.01
MDEL (µg/L)	5.49	(1)	**401.24**

(1)-Limitations based on acute LTA (Acute LTA < Chronic LTA)

Table F-11. WQBEL Calculations for Cyanide

	Acute	Chronic	Human Health
Criteria (µg/L)	22	5.2	700
Dilution Credit	No Dilution	No Dilution	No Dilution
ECA	22	5.2	700
ECA Multiplier	0.32	0.53	--
LTA	7.06	2.74	--
AMEL Multiplier (95th%)	(1)	1.55	--
AMEL (µg/L)	(1)	**4.26**	**700**
MDEL Multiplier (99th%)	(1)	3.11	2.01
MDEL (µg/L)	(1)	**8.54**	**1,404**

(1)-Limitations based on chronic LTA (Chronic LTA < Acute LTA)

Summary of Water Quality-based Effluent Limitations
Discharge Point No. 001

Table F-12. Summary of Water Quality-based Effluent Limitations

Parameter	Units	Effluent Limitations				
		Average Monthly	Average Weekly	Maximum Daily	Instantaneous Minimum	Instantaneous Maximum
Conventional Pollutants						
pH	standard units	--	--	--	6.5	8.5
Priority Pollutants						
Bis (2-ethylhexyl) Phthalate	µg/L	1.8	--	3.6	--	--
Copper, Total Recoverable	µg/L	2.7	--	5.5	--	--
Cyanide, Total (as CN)	µg/L	4.3	--	8.5	--	--
Persistent Chlorinated Hydrocarbon Pesticides	µg/L	--	--	--	--	ND(1)
Non-Conventional Pollutants						
Aluminum, Total Recoverable	µg/L	71	--	143	--	--
Ammonia Nitrogen, Total (as N)	mg/L	0.8	--	2.1	--	--
Chlorine, Total Residual	mg/L	--	0.01(2)	--	--	0.02(3)
Electrical Conductivity @ 25 Deg. C	µmhos/cm	700(4)	--	--	--	--
Iron, Total Recoverable	µg/L	300(5)	--	--	--	--
Manganese, Total Recoverable	µg/L	50(5)	--	--	--	--
	lbs/day(1)	0.083	--	--	--	--

Parameter	Units	Effluent Limitations				
		Average Monthly	Average Weekly	Maximum Daily	Instantaneous Minimum	Instantaneous Maximum
Nitrate Nitrogen, Total (as N)	mg/L	10	--	--	--	--
Settleable Solids	mL/L-hr	0.1	--	0.2	--	--
Total Coliform	MPN/100 mL	23(6)	2.2(7)	--	--	240
Turbidity	NTU			2(8)	5(8)	10

(1)-ND - No detectable amounts of the following persistent chlorinated hydrocarbon pesticides is allowed: alpha BHC, aldrin, alpha endosulfan, beta endosulfan, beta BHC, heptachlor, beta BHC, delta BHC, gamma BHC (lindane), 4,4-DDD, 4,4-DDE, 4,4-DDT, chlordane, dieldrin, endrin, endrin aldehyde, endosulfan sulfate, heptachlor, heptachlor epoxide, and toxaphene.
(2)-Applied as a 4-day average effluent limitation.
(3)-Applied as a 1-hour average effluent limitation.
(4)-This final effluent limitation becomes effective unless a salinity source control program is developed and implemented by the Discharger, and when the Discharger participates in the development of the Central Valley Salinity Management Plan.
(5)-Applied as an annual average
(6)-Not to be exceeded more than once in any 30-day period.
(7)-Expressed as a 7-day median.
(8)-2 NTU is a daily average; 5 NTU not to be exceeded more than 5% of the time within a 24-hour period.

5. Whole Effluent Toxicity (WET)

For compliance with the Basin Plan's narrative toxicity objective, this Order requires the Discharger to conduct whole effluent toxicity testing for acute and chronic toxicity, as specified in the Monitoring and Reporting Program (Attachment E, Section V.). This Order also contains effluent limitations for acute toxicity and requires the Discharger to implement best management practices to investigate the causes of, and identify corrective actions to reduce or eliminate effluent toxicity.

a. **Acute Aquatic Toxicity.** The Basin Plan contains a narrative toxicity objective that states, "*All waters shall be maintained free of toxic substances in concentrations that produce detrimental physiological responses in human, plant, animal, or aquatic life.*" (Basin Plan at III-8.00) The Basin Plan also states that, "…*effluent limits based upon acute biotoxicity tests of effluents will be prescribed where appropriate*…". USEPA Region 9 provided guidance for the development of acute toxicity effluent limitations in the absence of numeric water quality objectives for toxicity in its document titled "Guidance for NPDES Permit Issuance", dated February 1994. In section B.2. "Toxicity Requirements" (pgs. 14-15) it states that, "*In the absence of specific numeric water quality objectives for acute and chronic toxicity, the narrative criterion 'no toxics in toxic amounts' applies. Achievement of the narrative criterion, as applied herein, means that ambient waters shall not demonstrate for acute toxicity: 1) less than 90% survival, 50% of the time, based on the monthly median, or 2) less than 70% survival, 10% of the time, based on any monthly median. For chronic toxicity, ambient waters shall not demonstrate a test result of greater than 1 TUc."* Accordingly, effluent limitations for acute toxicity have been included in this Order as follows:

Acute Toxicity. Survival of aquatic organisms in 96-hour bioassays of undiluted waste shall be no less than:

Minimum for any one bioassay ----------	70%
Median for any three or more consecutive bioassays ---------	90%

b. **Chronic Aquatic Toxicity.** The Basin Plan contains a narrative toxicity objective that states, "All waters shall be maintained free of toxic substances in concentrations that produce detrimental physiological responses in human, plant, animal, or aquatic life." (Basin Plan at III-8.00) Adequate WET data is not available to determine if the discharge has reasonable potential to cause or contribute to an in-stream excursion above of the Basin Plan's narrative toxicity objective. Attachment E of this Order requires <monthly, quarterly, etc> chronic WET monitoring for demonstration of compliance with the narrative toxicity objective.

In addition to WET monitoring, Special Provisions VI.C.2.a. requires the Discharger to submit to the Regional Water Board an Initial Investigative TRE Work Plan for approval by the Executive Officer, to ensure the Discharger has a plan to immediately move forward with the initial tiers of a TRE, in the event effluent toxicity is encountered in the future. The provision also includes a numeric toxicity monitoring trigger and requirements for accelerated monitoring, as well as, requirements for TRE initiation if a pattern of toxicity is demonstrated.

D. Final Effluent Limitations

1. Mass-based Effluent Limitations

Title 40 CFR 122.45(f)(1) requires effluent limitations be expressed in terms of mass, with some exceptions, and 40 CFR 122.45(f)(2) allows pollutants that are limited in terms of mass to additionally be limited in terms of other units of measurement. This Order includes effluent limitations expressed in terms of mass and concentration. In addition, pursuant to the exceptions to mass limitations provided in 40 CFR 122.45(f)(1), some effluent limitations are not expressed in terms of mass, such as pH and temperature, and when the applicable standards are expressed in terms of concentration (e.g., CTR criteria and MCLs) and mass limitations are not necessary to protect the beneficial uses of the receiving water.

Two sets of mass-based effluent limitations were calculated for conventional pollutant parameters (BOD_5 and TSS) to ensure proper operation of the treatment plant. The mass-based effluent limitations were based upon the permitted average daily discharge flow allowed in Sections IV.A.1 and IV.A.2 of the Limitations and Discharge Requirements (corresponding to the average dry weather design flows for the interim tertiary treatment system and the new wastewater treatment plant).

2. Averaging Periods for Effluent Limitations

Title 40 CFR 122.45 (d) requires average weekly and average monthly discharge limitations for publicly owned treatment works (POTWs) unless impracticable. However, for toxic pollutants and pollutant parameters in water quality permitting, the US EPA recommends the use of a maximum daily effluent limitation in lieu of average weekly effluent limitations for two reasons. "*First, the basis for the 7-day average for POTWs derives from the secondary treatment requirements. This basis is not related to the need for assuring achievement of water quality standards. Second, a 7-day average, which could comprise up to seven or more daily samples, could average out peak toxic concentrations and therefore the discharge's potential for causing acute toxic effects would be missed.*" (TSD, pg. 96) This Order utilizes maximum daily effluent limitations in lieu of average weekly effluent limitations for cyanide, bis (2-ethylhexyl) phthalate, and aluminum as recommended by the TSD for the achievement of water quality standards and for the protection of the beneficial uses of the receiving stream. Furthermore, for total coliform, residual chlorine, settleable solids and turbidity, weekly average effluent limitations have been replaced or supplemented with effluent limitations utilizing shorter averaging periods. The rationale for using shorter averaging periods for these constituents is discussed in Attachment F, Section IV.C.3., above.

3. Satisfaction of Anti-Backsliding Requirements

All effluent limitations in this Order are at least as stringent as the effluent limitations in the previous Order.

4. Satisfaction of Antidegradation Policy

State Water Board Resolution No. 68-16 (Resolution 68-16) and
40 CFR section 131.12, require the Regional Water Board, in regulating discharge of waste, to maintain high quality waters of the State until it is demonstrated that any change in quality will be consistent with maximum benefit to the people of the State, will not unreasonably affect beneficial uses, and will not result in water quality less than that described in the Regional Water Board's policies. Resolution 68-16 requires the discharge be regulated to meet best practicable treatment or control to assure that pollution or nuisance will not occur and the highest water quality consistent with the maximum benefit to the people of the State be maintained.

a. **Surface Water.** The permitted surface water discharge is consistent with the antidegradation provisions of 40 CFR 131.12 and State Water Board Resolution 68-16. An interim tertiary treatment system is currently used by the Discharger to meet the requirements contained in Cease and Desist Order No. 5-01-181. The Regional Water Board approved the use of the interim tertiary treatment plant, which has an average dry weather design flow of 0.2 mgd. Part of the approval provided to the Discharger when the interim tertiary treatment system was operational, is the discharge of up to 650,000 gallons per day (gpd) to the unnamed tributary to Smuthers Ravine. The 650,000 gpd was derived to

accommodate peak influent flows (500,000 gpd) and up to 150,000 gpd of flow from the dewatering of the storage reservoir.

This Order includes two sets of effluent limitations to accommodate the existing configuration of the interim tertiary treatment system, as well as the new wastewater treatment plant that is scheduled for completion by the summer of 2008. The effluent limitations for the current configuration are based on the average dry weather design flow of 0.2 mgd; the effluent limitations for the new wastewater treatment plant are based on the average dry weather design flow of 0.275 mgd. As described in Section IV.D.1 above, water quality-based effluent limitations are applied as concentration-based effluent limitations, which are the same effluent limitations under both discharge scenarios. An increase in mass-based effluent limitations for BOD_5 and TSS (technology-based effluent limitations) is provided to accommodate the new average dry weather design flow.

The potential impact of the new wastewater treatment plant on water quality was addressed in the July 2004 City of Colfax Wastewater Treatment Plant Improvements Project, Draft Environmental Impact Report in accordance with CEQA requirements. The conclusion in the draft environmental impact report was that operation of the proposed project is expect to result in a beneficial impact to water quality within the region, since effluent of higher quality would be released to local waterways. The antidegradation analyses performed by the Discharger (see the 24 March 2004 City of Colfax Wastewater Treatment Plant Potential Water Quality Impacts from Effluent Discharge, and the 21 February 2007 City of Colfax WWTP Reasonable Potential and Anti-Degradation Analysis & Infeasibility Report), indicate that the discharge of effluent from the interim tertiary treatment system and the new wastewater treatment plant will have less than significant impact on surface water quality. This conclusion was based primarily on the fact that the interim tertiary treatment system removes significantly more of pollutants of concern than the old treatment system. Further, the new wastewater treatment plant (which includes biological nutrient removal) is designed to produce Title 22 equivalent treatment.

This Order provides for an increase in the volume and mass of pollutants discharged to accommodate the new wastewater treatment plant. The increase will not have significant impacts on aquatic life or human health, which is the beneficial use most likely affected by the pollutants discharged (BOD_5, TSS, chlorine residual, ammonia, and inorganics). The increase will not cause a violation of water quality objectives. The increase in the discharge allows the Discharger to provide the utility service necessary to accommodate housing and economic expansion in the area, and is considered to be a benefit to the people of the State. Compliance with these requirements will result in the use of best practicable treatment or control of the discharge.

The accommodation of the development, as set forth in the federal antidegradation policy and in the Water Code (see Water Code section 13241(e)), justifies lowering of receiving water quality. In this case, however, the

Order requires a higher level of treatment than what currently exists and other actions to be taken to eliminate inappropriate dischargers.

b. **Groundwater.** The proposed Order contains receiving water limits for groundwater. It does not authorize the discharge to exceed background and with respect to coliform the discharge cannot cause groundwater within influence of the wastewater treatment plant to contain waste constituents in concentrations in excess of natural background quality or a median of 2.2 MPN/100 mL over any 7-day period, whichever is greater.

The Order is, therefore, consistent with the antidegradation policy. The proposed Order requires monitoring and evaluation of any impact to groundwater. If impacts are found, the Discharger must provide a report on how to address the impacts. If the discharger violates the receiving water limits, it will be subject to enforcement.

The Discharger utilizes aeration ponds and a storage reservoir. Domestic wastewater contains constituents such as total dissolved solids (TDS), specific conductance, pathogens, nitrates, organics, metals, and oxygen demanding substances (e.g. BOD). Percolation from the ponds may result in an increase in the concentration of these constituents in groundwater. The increase in the concentration of these constituents in groundwater must be consistent with Resolution 68-16. Any increase in pollutant concentrations in groundwater must be shown to be necessary to allow wastewater utility service necessary to accommodate housing and economic expansion in the area and must be consistent with maximum benefit to the people of the State of California. Some degradation of groundwater by the Discharger is consistent with Resolution 68-16 provided that:

i. the degradation is limited in extent;

ii. the degradation after effective source control, treatment, and control is limited to waste constituents typically encountered in municipal wastewater as specified in the groundwater limitations in this Order;

iii. the Discharger minimizes the degradation by fully implementing, regularly maintaining, and optimally operating best practicable treatment and control (BPTC) measures; and

iv. the degradation does not result in water quality less than that prescribed in the Basin Plan.

Groundwater monitoring results, submitted as part of the Report of Waste Discharge, show that total coliform organisms has degraded groundwater quality when compared to background. The water quality objective for total coliform organisms is 2.2 MPN/100 mL. A Groundwater Limitation for total coliform organisms has been included in this order (*at or below*) the water quality

objective for protection of the municipal and domestic supply (MUN) beneficial use of groundwater.

Summary of Final Effluent Limitations
Discharge Point No. 001

Table F-13. Summary of Final Effluent Limitations (For Discharge from the Interim Tertiary Treatment System)

Parameter	Units	Effluent Limitations					Basis
		Average Monthly	Average Weekly	Maximum Daily	Instantaneous Minimum	Instantaneous Maximum	
Average Dry Weather Flow	mgd	--	--	0.2	--	--	DC
Conventional Pollutants							
Biochemical Oxygen Demand (BOD) (5-day @ 20 Deg. C)	mg/L	10	15	25	--	--	TTC
	lbs/day(2)	17	25	42	--	--	
Biochemical Oxygen Demand (BOD) (5-day @ 20 Deg. C)	% removal	85(1)	--	--	--	--	CFR
Total Suspended Solids (TSS)	mg/L	10	15	25	85(1)	--	TTC
	lbs/day(2)	17	25	42	--	--	
Total Suspended Solids (TSS)	% removal	85(1)	--	--	--	--	CFR
pH	standard units	--	--	--	6.5	8.5	BP
Priority Pollutants							
Copper, Total Recoverable	µg/L	2.7	--	5.5	--	--	CTR
Cyanide, Total (as CN)	µg/L	4.3	--	8.5	--	--	CTR/BPJ
Bis (2-ethylhexyl) Phthalate	µg/L	1.8	--	3.6	--	--	CTR/BPJ
Persistent Chlorinated Hydrocarbon Pesticides	µg/L	--	--	--	--	ND(3)	BP
Non-Conventional Pollutants							
Aluminum, Total Recoverable	µg/L	71	--	143	--	--	NAWQC
Ammonia Nitrogen, Total (as N)	mg/L	0.8	--	2.1	--	--	NAWQC
Chlorine, Total Residual	mg/L	--	0.01(4)	--	--	0.02(5)	BP
Iron, Total Recoverable	µg/L	300(7)	--	--	--	--	SEC MCL

Parameter	Units	Effluent Limitations					Basis
		Average Monthly	Average Weekly	Maximum Daily	Instantaneous Minimum	Instantaneous Maximum	
Manganese, Total Recoverable	µg/L	50(7)	--	--	--	--	SEC MCL
Nitrate Nitrogen, Total (as N)	mg/L	10	--	--	--	--	MCL
Settleable Solids	mL/L-hr	0.1	--	0.2	--	--	BP
Total Coliform	MPN/100 mL	23(8)	2.2(9)	--	--	240	TITLE 22
Turbidity	NTU			2	5(10)	10	TTC

AGR – Based on water quality criteria for protection of agriculture.
DC- Based on the design capacity of the Facility.
CFR – 40 CFR Part 133 (Secondary treatment standards).
BPJ – Best professional judgment.
CTR- Based on water quality criteria contained in the California Toxics Rule, and applied as specified in the SIP.
BP- Based on water quality objectives contained in the Basin Plan.
NAWQC- Based on USEPA's National Ambient Water Quality Criteria for the protection of freshwater aquatic life.
SEC MCL-Based on California Secondary Maximum Contaminant Level.
MCL- Based on California Primary Maximum Contaminant Level.
TITLE 22- Based on CA Dept. of Health Services Reclamation Criteria, CCR, Division 4, Chapter 3 (Title 22).
TTC- Tertiary treatment capability. These limitations reflect the level of treatment that is capable of a properly operated tertiary treatment facility.

(1)-The average monthly percent removal of BOD 5-day 20°C and total suspended solids shall not be less than 85%.
(2)-Based upon a design treatment capacity of 0.2 mgd.
(3)-ND – No detectable amounts of the following persistent chlorinated hydrocarbon pesticides is allowed: alpha BHC, aldrin, alpha endosulfan, beta endosulfan, beta BHC, delta BHC, gamma BHC (lindane), 4,4-DDD, 4,4-DDE, 4,4-DDT, chlordane, dieldrin, endrin, endrin aldehyde, endosulfan sulfate, heptachlor, heptachlor epoxide, and toxaphene.
(4)-Applied as a 4-day average effluent limitation.
(5)-Applied as a 1-hour average effluent limitation.
(6)-This final effluent limitation becomes effective unless a salinity source control program is developed and implemented by the Discharger, and when the Discharger participates in the development of the Central Valley Salinity Management Plan.
(7)-Applied as annual averages.
(8)-Not to be exceeded more than once in any 30-day period.
(9)-Expressed as a 7-day median.
(10)-5 NTU not to be exceeded more than 5% of the time within a 24-hour period.

Table F-14. Summary of Final Effluent Limitations (For Discharge from the New Wastewater Treatment Plant)

Parameter	Units	Effluent Limitations					Basis
		Average Monthly	Average Weekly	Maximum Daily	Instantaneous Minimum	Instantaneous Maximum	
Average Dry Weather Flow	mgd	--	--	0.275	--	--	DC
Conventional Pollutants							
Biochemical Oxygen Demand (BOD) (5-day @ 20 Deg. C)	mg/L	10	15	25	--	--	TTC
	lbs/day(2)	23	34	57	--	--	
Biochemical Oxygen Demand (BOD) (5-day @ 20 Deg. C)	% removal	85(1)	--	--	--	--	CFR
Total Suspended Solids (TSS)	mg/L	10	15	25	85(1)	--	TTC
	lbs/day(2)	23	34	57	--	--	
Total Suspended	% removal	85(1)	--	--	--	--	CFR

Parameter	Units	Effluent Limitations					Basis
		Average Monthly	Average Weekly	Maximum Daily	Instantaneous Minimum	Instantaneous Maximum	
Solids (TSS)							
pH	standard units	--	--	--	6.5	8.5	BP
Priority Pollutants							
Copper, Total Recoverable	µg/L	2.7	--	5.5	--	--	CTR
Cyanide, Total (as CN)	µg/L	4.3	--	8.5	--	--	CTR/BPJ
Bis (2-ethylhexyl) Phthalate	µg/L	1.8	--	3.6	--	--	CTR/BPJ
Persistent Chlorinated Hydrocarbon Pesticides	µg/L	--	--	--	--	ND(3)	BP
Non-Conventional Pollutants							
Aluminum, Total Recoverable	µg/L	71	--	143	--	--	NAWQC
Ammonia Nitrogen, Total (as N)	mg/L	0.8	--	2.1	--	--	NAWQC
Chlorine, Total Residual	mg/L	--	0.01(4)	--	--	0.02(5)	BP
Iron, Total Recoverable	µg/L	300(7)	--	--	--	--	SEC MCL
Manganese, Total Recoverable	µg/L	50(7)	--	--	--	--	SEC MCL
Nitrate Nitrogen, Total (as N)	mg/L	10	--	--	--	--	MCL
Settleable Solids	mL/L-hr	0.1	--	0.2	--	--	BP
Total Coliform	MPN/100 mL	23(8)	2.2(9)	--	--	240	TITLE 22
Turbidity	NTU	--	--	2	5(10)	10	TTC

AGR – Based on water quality criteria for protection of agriculture.
DC- Based on the design capacity of the Facility.
CFR – 40 CFR Part 133 (Secondary treatment standards).
BPJ – Best professional judgment.
CTR- Based on water quality criteria contained in the California Toxics Rule, and applied as specified in the SIP.
BP- Based on water quality objectives contained in the Basin Plan.
NAWQC- Based on USEPA's National Ambient Water Quality Criteria for the protection of freshwater aquatic life.
SEC MCL-Based on California Secondary Maximum Contaminant Level.
MCL- Based on California Primary Maximum Contaminant Level.
TITLE 22- Based on CA Dept. of Health Services Reclamation Criteria, CCR, Division 4, Chapter 3 (Title 22).
TTC- Tertiary treatment capability. These limitations reflect the level of treatment that is capable of a properly operated tertiary treatment facility.

(1)-The average monthly percent removal of BOD 5-day 20°C and total suspended solids shall not be less than 85%.
(2)-Based upon a design treatment capacity of 0.275 mgd.
(3)-ND – No detectable amounts of the following persistent chlorinated hydrocarbon pesticides is allowed: alpha BHC, aldrin, alpha endosulfan, beta endosulfan, beta BHC, delta BHC, gamma BHC (lindane), 4,4-DDD, 4,4-DDE, 4,4-DDT, chlordane, dieldrin, endrin, endrin aldehyde, endosulfan sulfate, heptachlor, heptachlor epoxide, and toxaphene.
(4)-Applied as a 4-day average effluent limitation.
(5)-Applied as a 1-hour average effluent limitation.
(6)-This final effluent limitation becomes effective unless a salinity source control program is developed and implemented by the Discharger, and when the Discharger participates in the development of the Central Valley Salinity Management Plan.

(7)-Applied as annual averages.
(8)-Not to be exceeded more than once in any 30-day period.
(9)-Expressed as a 7-day median.
(10)-5 NTU not to be exceeded more than 5% of the time within a 24-hour period.

E. Interim Effluent Limitations

1. **Constituents.** The SIP, section 2.2.1, requires that if a compliance schedule is granted for a CTR or NTR constituent, the Regional Water Board shall establish interim requirements and dates for their achievement in the NPDES permit. The interim limitations must be based on current treatment plant performance or existing permit limitations, whichever is more stringent. The State Water Board has held that the SIP may be used as guidance for non-CTR constituents. Therefore, the SIP requirement for interim effluent limitations has been applied to both CTR and non-CTR constituents in this Order.

   The interim limitations for ammonia; copper; and 4,4-DDE in this Order are based on the current treatment plant performance. In developing the interim limitation, where there are 10 sampling data points or more, sampling and laboratory variability is accounted for by establishing interim limits that are based on normally distributed data where 99.9 percent of the data points will lie within 3.3 standard deviations of the mean (*Basic Statistical Methods for Engineers and Scientists, Kennedy and Neville, Harper and Row*). Therefore, the interim limitations in this Order are established as the mean plus 3.3 standard deviations of the available data.

   When there are less than 10 sampling data points available, the *Technical Support Document for Water Quality- based Toxics Control* ((EPA/505/2-90-001), TSD) recommends a coefficient of variation of 0.6 be utilized as representative of wastewater effluent sampling. The TSD recognizes that a minimum of 10 data points is necessary to conduct a valid statistical analysis. The multipliers contained in Table 5-2 of the TSD are used to determine a maximum daily limitation based on a long-term average objective. In this case, the long-term average objective is to maintain, at a minimum, the current plant performance level. Therefore, when there are less than 10 sampling points for a constituent, interim limitations are based on 3.11 times the maximum observed effluent concentration to obtain the daily maximum interim limitation (TSD, Table 5-2).

   The Regional Water Board finds that the Discharger can undertake source control and treatment plant measures to maintain compliance with the interim limitations included in this Order. Interim limitations are established when compliance with effluent limitations cannot be achieved by the existing discharge. Discharge of constituents in concentrations in excess of the final effluent limitations, but in compliance with the interim effluent limitations, can significantly degrade water quality and adversely affect the beneficial uses of the receiving stream on a long-term basis. The interim limitations, however, establish an enforceable ceiling concentration until compliance with the effluent limitation can be achieved.

   Table F-15 summarizes the calculations of the interim effluent limitations for

ammonia; copper; and 4,4-DDE. It should be noted that due to the fact that effluent data from November 2002 through April 2007 were available for ammonia, all the available data were used to derive the interim effluent limitation for ammonia.

Table F-15. Interim Effluent Limitation Calculation Summary

Parameter	MEC	Mean	Std. Dev.	# of Samples	Interim Limitation
Copper, Total Recoverable	5.7	1.81	1.96	6	17.7
Ammonia Nitrogen, Total (as N)	17700	3600	3800	57	16070
4,4-DDE	0.013	0.0051	0.0053	4	0.04

Note: All values are in µg/L.

As described in Section IV.C.3.o in this Fact Sheet, interim performance-based effluent limitation are established for mercury as a means to limit the increase of mercury discharges to waters in the Central Valley. An interim mass-based effluent limitation of 0.000761lbs/month has been established.

As described in Section IV.C.3.r. above, interim performance-based effluent limitations are established for electrical conductivity as a means to limit the increase of salinity discharges to waters in the Central Valley. The interim performance-based effluent limitation is based on the MEC for electrical conductivity (993 µmhos/cm).

F. Land Discharge Specifications

Not Applicable

G. Reclamation Specifications

Not Applicable

V. RATIONALE FOR RECEIVING WATER LIMITATIONS

Basin Plan water quality objectives to protect the beneficial uses of surface water and groundwater include numeric objectives and narrative objectives, including objectives for chemical constituents, toxicity, and tastes and odors. The toxicity objective requires that surface water and groundwater be maintained free of toxic substances in concentrations that produce detrimental physiological responses in humans, plants, animals, or aquatic life. The chemical constituent objective requires that surface water and groundwater shall not contain chemical constituents in concentrations that adversely affect any beneficial use or that exceed the maximum contaminant levels (MCLs) in Title 22, CCR. The tastes and odors objective states that surface water and groundwater shall not contain taste- or odor-producing substances in concentrations that cause nuisance or adversely affect beneficial uses. The Basin Plan requires the application of the most stringent objective necessary to ensure that surface water and groundwater do not contain chemical constituents, toxic substances, radionuclides, or taste and odor producing substances in concentrations that adversely affect domestic drinking water supply, agricultural supply, or any other beneficial use.

A. Surface Water

1. CWA section 303(a-c), requires states to adopt water quality standards, including criteria where they are necessary to protect beneficial uses. The Regional Water Board adopted water quality criteria as water quality objectives in the Basin Plan. The Basin Plan states that "*[t]he numerical and narrative water quality objectives define the least stringent standards that the Regional Board will apply to regional waters in order to protect the beneficial uses*." The Basin Plan includes numeric and narrative water quality objectives for various beneficial uses and water bodies. This Order contains Receiving Surface Water Limitations based on the Basin Plan numerical and narrative water quality objectives for biostimulatory substances, chemical constituents, color, dissolved oxygen, floating material, oil and grease, pH, pesticides, radioactivity, sediment, settleable material, suspended material, tastes and odors, temperature, toxicity, turbidity, and electrical conductivity.

   Numeric Basin Plan objectives for bacteria, dissolved oxygen, pH, temperature, and turbidity are applicable to this discharge and have been incorporated as Receiving Surface Water Limitations. Rationale for these numeric receiving surface water limitations are as follows:

   a. **Bacteria.** The Basin Plan includes a water quality objective that "*[I]n water designated for contact recreation (REC-1), the fecal coliform concentration based on a minimum of not less than five samples for any 30-day period shall not exceed a geometric mean of 200/100 ml, nor shall more than ten percent of the total number of samples taken during any 30-day period exceed 400/100 ml*." Numeric Receiving Water Limitations for bacteria are included in this Order and are based on the Basin Plan objective.

   b. **Biostimulatory Substances**. The Basin Plan includes a water quality objective that "*[W]ater shall not contain biostimulatory substances which promote aquatic growths in concentrations that cause nuisance or adversely affect beneficial uses."* Receiving Water Limitations for biostimulatory substances are included in this Order and are based on the Basin Plan objective.

   c. **Color**. The Basin Plan includes a water quality objective that "*[W]ater shall be free of discoloration that causes nuisance or adversely affects beneficial uses."* Receiving Water Limitations for color are included in this Order and are based on the Basin Plan objective.

   d. **Chemical Constituents**. The Basin Plan includes a water quality objective that *"[W]aters shall not contain chemical constituents in concentrations that adversely affect beneficial uses."* Receiving Water Limitations for chemical constituents are included in this Order and are based on the Basin Plan objective.

   e. **Dissolved Oxygen.** The unnamed tributary of Smuthers Ravine has been designated as having the beneficial use of cold freshwater aquatic habitat (COLD). For water bodies designated as having COLD as a beneficial use, the

Basin Plan includes a water quality objective of maintaining a minimum of 7.0 mg/L of dissolved oxygen. Since the beneficial use of COLD does apply to the unnamed tributary of Smuthers Ravine, a receiving water limitation of 7.0 mg/L for dissolved oxygen was included in this Order.

For surface water bodies outside of the Delta, the Basin Plan includes the water quality objective that "…*the monthly median of the mean daily dissolved oxygen (DO) concentration shall not fall below 85 percent of saturation in the main water mass, and the 95 percentile concentration shall not fall below 75 percent of saturation.*" This objective was included as a receiving water limitation in this Order.

f. **Floating Material**. The Basin Plan includes a water quality objective that *"[W]ater shall not contain floating material in amounts that cause nuisance or adversely affect beneficial uses."* Receiving Water Limitations for floating material are included in this Order and are based on the Basin Plan objective.

g. **Oil and Grease**. The Basin Plan includes a water quality objective that *"[W]aters shall not contain oils, greases, waxes, or other materials in concentrations that cause nuisance, result in a visible film or coating on the surface of the water or on objects in the water, or otherwise adversely affect beneficial uses."* Receiving Water Limitations for oil and grease are included in this Order and are based on the Basin Plan objective.

h. **pH.** The Basin Plan includes water quality objective that *"[T]he pH shall not be depressed below 6.5 nor raised above 8.5. Changes in normal ambient pH levels shall not exceed 0.5 in fresh waters with designated COLD or WARM beneficial uses*" This Order includes receiving water limitations for both pH range and pH change.

The Basin Plan allows an appropriate averaging period for pH change in the receiving stream. Since there is no technical information available that indicates that aquatic organisms are adversely affected by shifts in pH within the 6.5 to 8.5 range, an averaging period is considered appropriate and a monthly averaging period for determining compliance with the 0.5 receiving water pH limitation is included in this Order.

i. **Pesticides**. The Basin Plan includes a water quality objective for pesticides beginning on page III-6.00. Receiving Water Limitations for pesticides are included in this Order and are based on the Basin Plan objective.

j. **Radioactivity**. The Basin Plan includes a water quality objective that *"[R]adionuclides shall not be present in concentrations that are harmful to human, plant, animal or aquatic life nor that result in the accumulation of radionuclides in the food web to an extent that presents a hazard to human, plant, animal or aquatic life."* The Basin Plan states further that *"[A]t a minimum, waters designated for use as domestic or municipal supply (MUN) shall not contain concentrations of radionuclides in excess of the maximum contaminant*

levels (MCLs) specified in Table 4 (MCL Radioactivity) of Section 64443 of Title 22 of the California Code of Regulations…" Receiving Water Limitations for radioactivity are included in this Order and are based on the Basin Plan objective.

k. **Sediment.** The Basin Plan includes a water quality objective that *"[T]he suspended sediment load and suspended sediment discharge rate of surface waters shall not be altered in such a manner as to cause nuisance or adversely affect beneficial uses"* Receiving Water Limitations for suspended sediments are included in this Order and are based on the Basin Plan objective.

l. **Settleable Material.** The Basin Plan includes a water quality objective that *"[W]aters shall not contain substances in concentrations that result in the deposition of material that causes nuisance or adversely affects beneficial uses."* Receiving Water Limitations for settleable material are included in this Order and are based on the Basin Plan objective.

m. **Suspended Material.** The Basin Plan includes a water quality objective that *"[W]aters shall not contain suspended material in concentrations that cause nuisance or adversely affect beneficial uses."* Receiving Water Limitations for suspended material are included in this Order and are based on the Basin Plan objective.

n. **Taste and Odors**. The Basin Plan includes a water quality objective that *"[W]ater shall not contain taste- or odor-producing substances in concentrations that impart undesirable tastes or odors to domestic or municipal water supplies or to fish flesh or other edible products of aquatic origin, or that cause nuisance, or otherwise adversely affect beneficial uses."* Receiving Water Limitations for taste- or odor-producing substances are included in this Order and are based on the Basin Plan objective.

o. **Temperature.** The unnamed tributary of Smuthers Ravine has the beneficial uses of both COLD and WARM. The Basin Plan includes the objective that "[a]*t no time or place shall the temperature of COLD or WARM intrastate waters be increased more than 5ºF above natural receiving water temperature*." This Order includes a receiving water limitation based on this objective.

p. **Toxicity**. The Basin Plan includes a water quality objective that *"[A]ll waters shall be maintained free of toxic substances in concentrations that produce detrimental physiological responses in human, plant, animal, or aquatic life."* Receiving Water Limitations for toxicity are included in this Order and are based on the Basin Plan objective.

q. **Turbidity.** The Basin Plan includes a water quality objective that "*[I]ncreases in turbidity attributable to controllable water quality factors shall not exceed the following limits:*

- *Where natural turbidity is between 0 and 5 Nephelometric Turbidity Units (NTUs), increases shall not exceed 1 NTU.*

- *Where natural turbidity is between 5 and 50 NTUs, increases shall not exceed 20 percent.*

- *Where natural turbidity is between 50 and 100 NTUs, increases shall not exceed 10 NTUs.*
- *Where natural turbidity is greater than 100 NTUs, increases shall not exceed 10 percent*."

A numeric Receiving Surface Water Limitation for turbidity is included in this Order and is based on the Basin Plan objective for turbidity.

B. Groundwater

1. The beneficial uses of the underlying ground water are municipal and domestic supply, industrial service supply, industrial process supply, and agricultural supply.

2. Basin Plan water quality objectives include narrative objectives for chemical constituents, tastes and odors, and toxicity of groundwater. The toxicity objective requires that groundwater be maintained free of toxic substances in concentrations that produce detrimental physiological responses in humans, plants, animals, or aquatic life. The chemical constituent objective states groundwater shall not contain chemical constituents in concentrations that adversely affect any beneficial use. The tastes and odors objective prohibits taste- or odor-producing substances in concentrations that cause nuisance or adversely affect beneficial uses. The Basin Plan also establishes numerical water quality objectives for chemical constituents and radioactivity in groundwaters designated as municipal supply. These include, at a minimum, compliance with MCLs in Title 22 of the CCR. The bacteria objective prohibits coliform organisms at or above 2.2 MPN/100 ml. The Basin Plan requires the application of the most stringent objective necessary to ensure that waters do not contain chemical constituents, toxic substances, radionuclides, taste- or odor-producing substances, or bacteria in concentrations that adversely affect municipal or domestic supply, agricultural supply, industrial supply or some other beneficial use.

3. Groundwater limitations are required to protect the beneficial uses of the underlying groundwater.

VI. RATIONALE FOR MONITORING AND REPORTING REQUIREMENTS

Section 122.48 requires that all NPDES permits specify requirements for recording and reporting monitoring results. Water Code sections 13267 and 13383 authorizes the Regional Water Board to require technical and monitoring reports. The Monitoring and Reporting Program (MRP), Attachment E of this Order, establishes monitoring and reporting requirements to implement federal and state requirements. The following provides the rationale for the monitoring and reporting requirements contained in the MRP for this Facility.

A. Influent Monitoring

1. Influent monitoring is required to collect data on the characteristics of the wastewater and to assess compliance with effluent limitations (e.g., BOD and TSS reduction requirements).

B. Effluent Monitoring

1. Pursuant to the requirements of 40 CFR §122.44(i)(2) effluent monitoring is required for all constituents with effluent limitations. Effluent monitoring is necessary to assess compliance with effluent limitations, assess the effectiveness of the treatment process, and to assess the impacts of the discharge on the receiving stream and groundwater.

2. The SIP states that if "…*all reported detection limits of the pollutant in the effluent are greater than or equal to the C* [water quality criterion or objective] *value, the RWQCB* [Regional Water Board] *shall establish interim requirements…that require additional monitoring for the pollutant….*" Monitoring for these constituents has been included in this Order in accordance with the SIP.

C. Whole Effluent Toxicity Testing Requirements

1. **Acute Toxicity.** Semi-annual 96-hour bioassay testing is required to demonstrate compliance with the effluent limitation for acute toxicity.

2. **Chronic Toxicity.** Semi-annual chronic whole effluent toxicity testing is required in order to demonstrate compliance with the Basin Plan's narrative toxicity objective.

D. Receiving Water Monitoring

1. Surface Water

a. Receiving water monitoring is necessary to assess compliance with receiving water limitations and to assess the impacts of the discharge on the receiving stream.

2. Groundwater

a. Section 13267 of the California Water Code states, in part, *"(a) A Regional Water Board, in establishing…waste discharge requirements… may investigate the quality of any waters of the state within its region*" and *"(b) (1) In conducting an investigation…, the Regional Water Board may require that any person who… discharges… waste…that could affect the quality of waters within its region shall furnish, under penalty of perjury, technical or monitoring program reports which the Regional Water Board requires. The burden, including costs, of these reports shall bear a reasonable relationship to the need for the report and the benefits to be obtained from the reports*." The burden, including costs, of these reports shall bear a reasonable relationship to the need for the report and the benefits to be obtained from the reports. In requiring those reports, the Regional Water Board shall provide the person with a written explanation with regard to the need for the reports, and shall identify the evidence that supports requiring that person to provide the reports. The Monitoring and Reporting Program (Attachment E) is issued pursuant to California Water Code Section 13267. The groundwater monitoring and reporting program required by this Order and the Monitoring and Reporting Program are necessary to assure compliance with these waste discharge requirements. The Discharger is responsible for the discharges of waste at the Facility subject to this Order.

b. Monitoring of the groundwater must be conducted to determine if the discharge has caused an increase in constituent concentrations, when compared to background. The monitoring must, at a minimum, require a complete assessment of groundwater impacts including the vertical and lateral extent of degradation, an assessment of all wastewater-related constituents which may have migrated to groundwater, an analysis of whether additional or different methods of treatment or control of the discharge are necessary to provide best practicable treatment or control to comply with Resolution No. 68-16. Economic analysis is only one of many factors considered in determining best practicable treatment or control. If monitoring indicates that the discharge has incrementally increased constituent concentrations in groundwater above background, this permit may be reopened and modified. Until groundwater monitoring is sufficient, this Order contains Groundwater Limitations that allow groundwater quality to be degraded for certain constituents when compared to background groundwater quality, but not to exceed water quality objectives. If groundwater quality has been degraded by the discharge, the incremental change in pollutant concentration (when compared with background) may not be increased. If

groundwater quality has been or may be degraded by the discharge, this Order may be reopened and specific numeric limitations established consistent with Resolution 68-16 and the Basin Plan.

c. This Order requires the Discharger to continue groundwater monitoring and includes a regular schedule of groundwater monitoring in the attached Monitoring and Reporting Program. The groundwater monitoring reports are necessary to evaluate impacts to waters of the State to assure protection of beneficial uses and compliance with Regional Board plans and policies, including Resolution 68-16. Evidence in the record includes effluent monitoring data that indicates the presence of constituents that may degrade groundwater and surface water.

E. Other Monitoring Requirements

1. Water Supply Monitoring

Water supply monitoring is required to evaluate the source of constituents in the wastewater.

2. Biosolids Monitoring

Biosolids monitoring is required to ensure compliance with the biosolids disposal requirements (Special Provisions VI.C.6.a.). Biosolids disposal requirements are imposed pursuant to 40 CFR Part 503 to protect public health and prevent groundwater degradation.

3. Pond Monitoring

Consistent with the requirements contained in the previous Order, weekly storage reservoir monitoring for dissolved oxygen, pH, and odors, and daily monitoring for freeboard and pond elevation, is required to ensure compliance with the treatment and storage pond operating requirements (Special Provision VI.C.4.a). In addition, these same monitoring requirements have been included for Treatment Ponds 1 and 2 to ensure compliance with the treatment and storage pond operating requirements (Special Provision VI.C.4.a).

VII. RATIONALE FOR PROVISIONS

A. Standard Provisions

Standard Provisions, which apply to all NPDES permits in accordance with section 122.41, and additional conditions applicable to specified categories of permits in accordance with section 122.42, are provided in Attachment D. The discharger must comply with all standard provisions and with those additional conditions that are applicable under section 122.42.

Section 122.41(a)(1) and (b) through (n) establish conditions that apply to all State-issued NPDES permits. These conditions must be incorporated into the permits either expressly or by reference. If incorporated by reference, a specific citation to the regulations must be included in the Order. Section 123.25(a)(12) allows the state to omit or modify conditions to impose more stringent requirements. In accordance with section 123.25, this Order omits federal conditions that address enforcement authority specified in sections 122.41(j)(5) and (k)(2) because the enforcement authority under the Water Code is more stringent. In lieu of these conditions, this Order incorporates by reference Water Code section 13387(e).

B. Special Provisions

1. Reopener Provisions

a. **Pollution Prevention.** This Order requires the Discharger prepare pollution prevention plans following CWC section 13263.3(d)(3) for ammonia; copper; and 4,4-DDE. This reopener provision allows the Regional Water Board to reopen this Order for addition and/or modification of effluent limitations and requirements for these constituents based on a review of the pollution prevention plans.

b. **Whole Effluent Toxicity.** This Order requires the Discharger to investigate the causes of, and identify corrective actions to reduce or eliminate effluent toxicity through a Toxicity Reduction Evaluation (TRE). This Order may be reopened to include a numeric chronic toxicity limitation, a new acute toxicity limitation, and/or a limitation for a specific toxicant identified in the TRE. Additionally, if a numeric chronic toxicity water quality objective is adopted by the State Water Board, this Order may be reopened to include a numeric chronic toxicity limitation based on that objective.

c. **Water Effects Ratio (WER) and Metal Translators.** A default WER of 1.0 has been used in this Order for calculating CTR criteria for applicable priority pollutant inorganic constituents. In addition, and as necessary, default dissolved-to-total metal translators have been used to convert water quality objectives from dissolved to total recoverable when developing effluent limitations for inorganic parameters. If the Discharger performs studies to determine site-specific WERs and/or site-specific dissolved-to-total metal translators, this Order may be reopened to modify the effluent limitations for the applicable inorganic constituents.

2. Special Studies and Additional Monitoring Requirements

a. **Chronic Whole Effluent Toxicity Requirements.** The Basin Plan contains a narrative toxicity objective that states, “All waters shall be maintained free of toxic substances in concentrations that produce detrimental physiological responses in human, plant, animal, or aquatic life.” (Basin Plan at III-8.00.) Adequate WET data is not available to determine if the discharge has reasonable potential to cause or contribute to an in-stream excursion above of the Basin Plan’s narrative

toxicity objective. Attachment E of this Order requires semi-annual chronic WET monitoring for demonstration of compliance with the narrative toxicity objective.

In addition to WET monitoring, this provision requires the Discharger to submit to the Regional Water Board an Initial Investigative TRE Work Plan for approval by the Executive Officer, to ensure the Discharger has a plan to immediately move forward with the initial tiers of a TRE, in the event effluent toxicity is encountered in the future. The provision also includes a numeric toxicity monitoring trigger and requirements for accelerated monitoring, as well as, requirements for TRE initiation if a pattern of toxicity is demonstrated.

i. **Monitoring Trigger.** A numeric toxicity monitoring trigger of > 1 TUc (where TUc = 100/NOEC) is applied in the provision, because this Order does not allow any dilution for the chronic condition. Therefore, a TRE is triggered when the effluent exhibits a pattern of toxicity at 100% effluent.

ii. **Accelerated Monitoring.** The provision requires accelerated WET testing when a regular WET test result exceeds the monitoring trigger. The purpose of accelerated monitoring is to determine, in an expedient manner, whether there is a pattern of toxicity before requiring the implementation of a TRE.

The provision requires accelerated monitoring consisting of four chronic toxicity tests every two weeks using the species that exhibited toxicity. Guidance regarding accelerated monitoring and TRE initiation is provided in the *Technical Support Document for Water Quality-based Toxics Control, EPA/505/2-90-001, March 1991* (TSD). The TSD at page 118 states, "EPA recommends if toxicity is repeatedly or periodically present at levels above effluent limits more than 20 percent of the time, a TRE should be required." Therefore, four accelerated monitoring tests are required in this provision. If no toxicity is demonstrated in the four accelerated tests, then it demonstrates that toxicity is not present at levels above the monitoring trigger WET testing results exceeding the monitoring trigger during accelerated monitoring demonstrates a pattern of toxicity and requires the Discharger to initiate a TRE to address the effluent toxicity.

See the WET Accelerated Monitoring Flow Chart (Figure F-1), below, for further clarification of the accelerated monitoring requirements and for the decision points for determining the need for TRE initiation.

iii. **TRE Guidance.** The Discharger is required to prepare a TRE Work Plan in accordance with USEPA guidance. Numerous guidance documents are available, as identified below:

- *Toxicity Reduction Evaluation Guidance for Municipal Wastewater Treatment Plants,* (EPA/833B-99/002), August 1999.

- Generalized Methodology for Conducting Industrial TREs, (EPA/600/2-88/070), April 1989.

- *Methods for Aquatic Toxicity Identification Evaluations: Phase I Toxicity Characterization Procedures,* Second Edition, EPA 600/6-91/005F, February 1991.

- *Toxicity Identification Evaluation: Characterization of Chronically Toxic Effluents, Phase I*, EPA 600/6-91/005F, May 1992.

- *Methods for Aquatic Toxicity Identification Evaluations: Phase II Toxicity Identification Procedures for Samples Exhibiting acute and Chronic Toxicity,* Second Edition, EPA 600/R-92/080, September 1993.

- *Methods for Aquatic Toxicity Identification Evaluations: Phase III Toxicity Confirmation Procedures for Samples Exhibiting Acute and Chronic Toxicity*, Second Edition, EPA 600/R-92/081, September 1993.

- *Methods for Measuring the Acute Toxicity of Effluents and Receiving Waters to Freshwater and Marine Organisms*, Fifth Edition, EPA-821-R-02-012, October 2002.

- *Short-term Methods for Estimating the Chronic Toxicity of Effluents and Receiving Waters to Freshwater Organisms*, Fourth Edition, EPA-821-R-02-013, October 2002.

- *Technical Support Document for Water Quality-based Toxics Control,* EPA/505/2-90-001, March 1991.

Figure F-1
WET Accelerated Monitoring Flow Chart

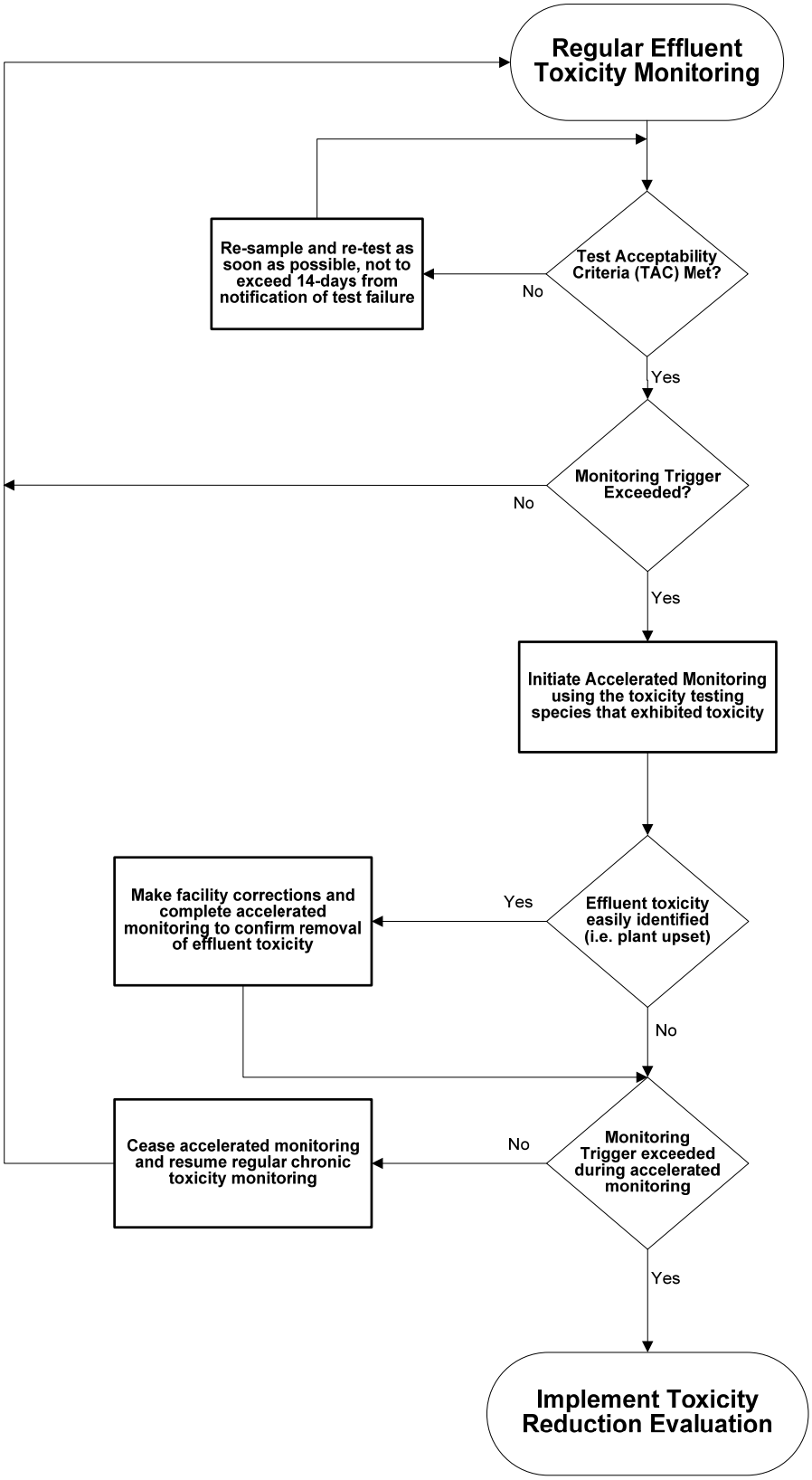

c. **Groundwater Monitoring (Special Provision VI.C.2.c.).** To determine compliance with the Groundwater Limitations contained in Section V.B. of the Order, the Discharger is required to continue monitoring in accordance of the groundwater monitoring network and program developed and implemented under Order No. 5-01-181. This Order carries over the monitoring frequencies from the previous Order and adds several new parameters of concern (dissolved oxygen, total dissolved solids, nitrate nitrogen, total kjeldahl nitrogen, and fecal coliform).

The Discharger shall annually submit a report on the underlying groundwater quality. If the monitoring shows that any constituent concentrations are increased above background water quality, the Discharger shall 1) evaluate the groundwater report results; 2) assess each Facility component with respect to BPTC, and 3) provide actions that will be taken for minimizing the Facility's impact on groundwater quality.

3. Best Management Practices and Pollution Prevention

a. **Pollutant Minimization Program.** As required in Section 2.4.5.1 of the SIP, a pollutant minimization program (PMP) is required when there is evidence that a priority pollutant is present in the effluent above an effluent limitation and either: 1) A sample result is reported as DNQ and the effluent limitation is less than the RL; or 2) A sample result is reported as ND and the effluent limitation is less than the MDL. The goal of a PMP is to reduce all potential sources of a priority pollutant through pollution minimization strategies and measures to maintain effluent concentrations at or below WQBELs.

b. **Salinity Evaluation and Minimization Plan.** The Discharger shall prepare and implement a salinity evaluation and minimization plan to address sources of salinity from the municipal wastewater treatment system. The plan shall be completed and submitted to the Regional Water Board **within 9 months of the effective date of this Order for approval by the Executive Officer**.

c. **Salinity Reduction Goal.** In an effort to monitor progress in reducing salinity discharges to the unnamed tributary to Smuthers Ravine, the Discharger shall provide annual reports demonstrating reasonable progress in the reduction of salinity in its discharge to the unnamed tributary to Smuthers Ravine. Based on effluent data for this Facility, the Regional Water Board finds that an average monthly salinity effluent limitation of 993 µmhos/cm as electrical conductivity (EC) is a reasonable interim performance-based limitation that can be immediately achieved upon the effective date of this Order. The annual reports shall be submitted in accordance with the Monitoring and Reporting Program (Attachment E, Section X.D.1.).

4. Construction, Operation, and Maintenance Specifications

a. Due to the elevated concentrations of ammonia detected in the effluent from the interim tertiary treatment plant, the Discharger will be required to operate the

treatment plant in a nitrification mode to the maximum extent practicable until completion of the new wastewater treatment plant on 1 January 2009.

b. These provisions are based on the requirements of 40 CFR 122.41(e) and the previous Order.

5. Special Provisions for Municipal Facilities (POTWs Only)

a. **Pretreatment Requirements.** Not Applicable.

b. **Sanitary Sewer Overflow Requirements**
The Discharger's collection system is part of the treatment system that is subject to the Order 2006-0003, adopted by the State Water Board on May 2006. This Order is a Statewide General WDR for Sanitary Sewer Systems. Therefore, the Discharger shall be subject to the requirements of Order 2006-0003 and any future revisions thereto. Regardless of the coverage obtained under Order 2006-0003, the Discharger's collection system is part of the treatment system that is subject to this Order. As such, pursuant to federal regulations, the Discharger must properly operate and maintain its collection system [CFR Part 122.41(e)], report any non-compliance [CFR parts 122.41(l)(6) and (7)], and mitigate any discharge from the collection system in violation of this Order [CFR Part 122.41(d)].

6. Other Special Provisions

a. Prior to making any change in the discharge point, place of use, or purpose of use of the wastewater, the Discharger must obtain approval of, or clearance from the State Water Resources Control Board (Division of Water Rights).

In the event of any change in control or ownership of land or waste discharge facilities presently owned or controlled by the Discharger, the Discharger shall notify the succeeding owner or operator of the existence of this Order by letter, a copy of which shall be immediately forwarded to this office.

To assume operation under this Order, the succeeding owner or operator must apply in writing to the Executive Officer requesting transfer of the Order. The request must contain the requesting entity's full legal name, the State of incorporation if a corporation, address and telephone number of the persons responsible for contact with the Regional Water Board and a statement. The statement shall comply with the signatory paragraph of Federal Standard Provision V.B.5 and state that the new owner or operator assumes full responsibility for compliance with this Order. Failure to submit the request shall be considered a discharge without requirements, a violation of the California Water Code. Transfer shall be approved or disapproved in writing by the Executive Officer.

7. Compliance Schedules

The use and location of compliances schedules in the permit depends on the Discharger's ability to comply and the source of the applied water quality criteria.

a. This Order requires the Discharger to treat wastewater to Title 22 specifications. In order to provide the time necessary for the Discharger to initiate and complete construction of their new wastewater treatment plant, a compliance schedule has been included. Based on conversations with the Discharger and on information contained within the 21 February 2007 City of Colfax WWTP Reasonable Potential and Anti-Degradation Analysis & Infeasibility Report, the Regional Water Board is including a compliance schedule that allows the Discharger until 1 January 2009 to complete the construction of the new wastewater treatment plant and have the plant fully operating and in compliance with Title 22 requirements.

   As described in Section II.D above, the Discharger has already completed the design of the new wastewater treatment plant, and received bids for construction of the plant. As part of this compliance schedule, the Discharger will be required to provide interim status reports to the Regional Water Board regarding progress on the actual construction of the new wastewater treatment plant.

b. The Discharger submitted a request, and justification (dated 21 February 2007), for a compliance schedule for copper, ammonia and 4,4'-DDE. The compliance schedule justifications included all items specified in Paragraph 3, items (a) through (d), of Section 2.1 of the SIP. This Order establishes a compliance schedule for the new, final, WQBELs for ammonia; copper; and 4,4'-DDE, and requires full compliance by **1 January 2009**.

c. As a condition of the compliance schedule, the Discharger is also required to develop and implement a PPP for ammonia; copper; and 4,4'-DDE in this Order per CWC section 13263.3(d)(1)(D) as part of the interim effluent limitations. It may be necessary to provide source controls to comply with the interim effluent limitations. The PPP shall be developed in conformance with CWC section 13263.3(d)(3) as outlined in subsection d., below.

d. **CWC section 13263.3(d)(3) Pollution Prevention Plans.** The pollution prevention plans required for ammonia; copper;and 4,4-DDEshall, at a minimum, meet the requirements outlined in CWC section 13263.3(d)(3). The minimum requirements for the pollution prevention plans include the following:

   i. An estimate of all of the sources of a pollutant contributing, or potentially contributing, to the loadings of a pollutant in the treatment plant influent.

   ii. An analysis of the methods that could be used to prevent the discharge of the pollutants into the Facility, including application of local limits to industrial or commercial dischargers regarding pollution prevention techniques, public education and outreach, or other innovative and alternative approaches to

reduce discharges of the pollutant to the Facility. The analysis also shall identify sources, or potential sources, not within the ability or authority of the Discharger to control, such as pollutants in the potable water supply, airborne pollutants, pharmaceuticals, or pesticides, and estimate the magnitude of those sources, to the extent feasible.

iii. An estimate of load reductions that may be attained through the methods identified in subparagraph ii.

iv. A plan for monitoring the results of the pollution prevention program.

v. A description of the tasks, cost, and time required to investigate and implement various elements in the pollution prevention plan.

vi. A statement of the Discharger's pollution prevention goals and strategies, including priorities for short-term and long-term action, and a description of the Discharger's intended pollution prevention activities for the immediate future.

vii. A description of the Discharger's existing pollution prevention programs.

viii. An analysis, to the extent feasible, of any adverse environmental impacts, including cross-media impacts or substitute chemicals that may result from the implementation of the pollution prevention program.

ix. An analysis, to the extent feasible, of the costs and benefits that may be incurred to implement the pollution prevention program.

VIII. PUBLIC PARTICIPATION

The California Regional Water Quality Control Board, Central Valley Region (Regional Water Board) is considering the issuance of waste discharge requirements (WDRs) that will serve as a National Pollutant Discharge Elimination System (NPDES) permit for Wastewater Treatment Plant. As a step in the WDR adoption process, the Regional Water Board staff has developed tentative WDRs. The Regional Water Board encourages public participation in the WDR adoption process.

A. Notification of Interested Parties

The Regional Water Board has notified the Discharger and interested agencies and persons of its intent to prescribe waste discharge requirements for the discharge and has provided them with an opportunity to submit their written comments and recommendations. Notification was provided through the publication of a Notice of Public Hearing in a local newspaper and on the Central Valley Regional Water Board website.

B. Written Comments

The staff determinations are tentative. Interested persons are invited to submit written comments concerning the issues continued from the 22 June 2007 hearing. Comments must be submitted either in person or by mail to the Executive Office at the Regional Water Board at the address above on the cover page of this Order.

To be fully responded to by staff and considered by the Regional Water Board, written comments should be received at the Regional Water Board offices by 12:00 noon on 26 September 2007.

C. Public Hearing

The Regional Water Board will continue a public hearing on the tentative WDRs during its regular Board meeting on the following date and time and at the following location:

Date: 25/26 October 2007
Time: 8:30 am
Location: Regional Water Quality Control Board, Central Valley Region
11020 Sun Center Dr., Suite #200
Rancho Cordova, CA 95670

Interested persons are invited to attend. At the public hearing, the Regional Water Board will hear testimony, if any, pertinent to the discharge, WDRs, and permit. Oral testimony will be heard; however, for accuracy of the record, important testimony should be in writing.

Please be aware that dates and venues may change. Our Web address is http://www.waterboards.ca.gov/rwqcb5/ where you can access the current agenda for changes in dates and locations.

D. Waste Discharge Requirements Petitions

Any aggrieved person may petition the State Water Resources Control Board to review the decision of the Regional Water Board regarding the final WDRs. The petition must be submitted within 30 days of the Regional Water Board's action to the following address:

State Water Resources Control Board
Office of Chief Counsel
P.O. Box 100, 1001 I Street
Sacramento, CA 95812-0100

E. Information and Copying

The Report of Waste Discharge (RWD), related documents, tentative effluent limitations and special provisions, comments received, and other information are on file and may be inspected at the address above at any time between 8:30 a.m. and 4:45 p.m., Monday through Friday. Copying of documents may be arranged through the Regional Water Board by calling (916) 464-4645.

F. Register of Interested Persons

Any person interested in being placed on the mailing list for information regarding the WDRs and NPDES permit should contact the Regional Water Board, reference this Facility, and provide a name, address, and phone number.

G. Additional Information

Requests for additional information or questions regarding this order should be directed to Diana Messina at (916) 464-4828.

ATTACHMENT G - SUMMARY OF REASONABLE POTENTIAL ANALYSIS

Constituent	Units	MEC	B	C	CMC	CCC	Water & Org	Org. Only	Basin Plan	MCL	Reasonable Potential
Acenaphthylene	µg/L	1.7	ND	20	--	--	1,200	2,700	--	20(1)	No
Aluminum, Total Recoverable	µg/L	11	96	87	750(2)	87(3)	--	--	--	200	Yes
Ammonia	mg/L	17.7	2.43	1.45	2.14(2)	1.45(4)	--	--	--	--	Yes
Antimony, Total Recoverable	µg/L	0.07	0.08	6	--	--	14	4,300	--	6	No
Arsenic	µg/L	7.6	5.7	10	340	150	--	--	--	10	No
Barium	µg/L	136	120	1,000	--	--	--	--	--	1,000	No
Bis (2-ethylhexyl) phthalate	µg/L	4.9	3	1.8	--	--	1.8	5.9	--	4	Yes
Cadmium, Total Recoverable	µg/L	0.09	0.08	1.2	1.61	1.2	--	--	--	5	No
Chloride	mg/L	43	33	106	--	--	--	--	--	106(5)	No
Chlorodibromomethane	µg/L	0.2	ND	0.401	--	--	0.401	34	--	80	No
Chloroform	µg/L	2.8	0.9	80	--	--	--	1,240(6)	--	80	No
Chromium (III)	µg/L	0.1	NA	50	819.9	97.7	--	--	--	50	No
Chromium (IV)	µg/L	3.5	1.3	11.43	16.29	11.43	--	--	--	50	No
Chromium, Total Recoverable	µg/L	4.9	ND	50	--	--	--	--	--	50	No
Copper, Total Recoverable	µg/L	5.7	2.4	3.99	5.49	3.99	1,300	--	--	1,000	Yes
Cyanide	µg/L	12	39	5.2	22	5.2	700	220,000	--	--	Yes
4,4'-DDE	µg/L	0.013	ND	0.00059	--	--	0.00059	0.00059	--	--	Yes
Delta-BHC	µg/L	0.006	ND	500	--	--	--	--	--	500(7)	No
Dichlorobromomethane	µg/L	0.3	ND	0.56	--	--	0.56	46	--	80	No
Electrical Conductivity @ 20 °C	umhos/cm	993	370	700	--	--	--	--	--	700(5)	No
Fluoride	µg/L	70	80	1000	--	--	--	--	--	1000(7)	No
Iron	µg/L	3,690	2,660	300	--	1,000(8)	--	--	--	300	Yes
Lead, Total Recoverable	µg/L	0.06	0.2	1.0	25.4	1.0	--	--	--	15	No
Manganese	µg/L	2,310	2,180	50	--	--	--	--	--	50	Yes
Mercury, Total Recoverable	µg/L	0.015	0.016	0.05	1.4(2)	0.77(3)	0.05	0.051	--	2	No
Methylene Blue Activated Substances	µg/L	180	130	500	--	--	--	--	--	500	Yes

Constituent	Units	MEC	B	C	CMC	CCC	Water & Org	Org. Only	Basin Plan	MCL	Reasonable Potential
Nickel, Total Recoverable	µg/L	4.0	6.0	24	216.1	24	610	4,600	--	100	No
Nitrate Nitrogen, Total (as N)	mg/L	2.4	1.4	10	--	--	--	--	--	10	Yes
Nitrite Nitrogen, Total (as N)	µg/L	10	90	1,000	--	--	--	--	--	1,000	No
Phosphorus	µg/L	770	470	--	--	--	--	--	--	--	No
Selenium	µg/L	0.4	0.5	5	20	5	--	--	--	50	No
Sulfate	mg/L	7.6	9.4	250	--	--	--	--	--	250	No
Sulfite	µg/L	3	ND	--	--	--	--	--	--	--	No
Thallium, Total Recoverable	µg/L	0.04	0.06	1.7	--	--	1.7	6.3	--	2	No
Total Dissolved Solids	mg/L	590	190	450	--	--	--	--	--	450(5)	No
Tributyltin (TBT)	µg/L	0.01	ND	0.063	0.46(2)	0.063(3)	--	--	--	--	No
Zinc, Total Recoverable	µg/L	7	9	55.1	55.1	55.1	--	--	--	5,000	No

General Note: All inorganic concentrations are given as a total recoverable.
MEC = Maximum Effluent Concentration
B = Maximum Receiving Water Concentration or lowest detection level, if non-detect
C = Criterion used for Reasonable Potential Analysis
CMC = Criterion Maximum Concentration (CTR or NTR)
CCC = Criterion Continuous Concentration (CTR or NTR)
Water & Org = Human Health Criterion for Consumption of Water & Organisms (CTR or NTR)
Org. Only = Human Health Criterion for Consumption of Organisms Only (CTR or NTR)
Basin Plan = Numeric Site-specific Basin Plan Water Quality Objective
MCL = Drinking Water Standards Maximum Contaminant Level
NA = Not Available
ND = Non-detect

Footnotes:

(1) Taste and Odor Threshold (USEPA Drinking Water)
(2) USEPA National Recommended Ambient Water Quality Criteria, Freshwater Aquatic Life Protection, 1-hour Average.
(3) USEPA National Recommended Ambient Water Quality Criteria, Freshwater Aquatic Life Protection, 4-day average.
(4) USEPA National Recommended Ambient Water Quality Criteria, Freshwater Aquatic Life Protection, 30-day Average.
(5) Water Quality for Agriculture; note that the long-term average values for EC and TDS do not exceed the Water Quality for Agriculture criteria that serve as goals that are used to screen for elevated levels of salinity.
(6) USEPA National Recommended Ambient Water Quality Criteria, Freshwater Aquatic Life Protection, Chronic Toxicity Information.
(7) National Academy of Sciences, Drinking Water Health Advisory, Toxicity other than Cancer
(8) USEPA National Recommended Ambient Water Quality Criteria, Freshwater Aquatic Life Protection, instantaneous maximum.