Appendix

C

Stormwater Management Plan Legal Authority

Appendix C-1
Legal Authority

RESERVED

ORDINANCE NO. 2473 (N.C.S.)

AN ORDINANCE AMENDING CHAPTER 29 OF THE SALINAS CITY CODE REGARDING STORMWATER MANAGEMENT AND DISCHARGE CONTROL

WHEREAS, on June 1, 1999, the City Council adopted Ordinance No. 2350 adding Chapter 29 to the Salinas City Code to establish a program for stormwater management and control; and

WHEREAS, the City of Salinas seeks to comply with all provisions of state and federal law; and

WHEREAS, to ensure compliance with federal and state regulatory requirements, and to comply with the terms of the City's 2005 National Pollutant Discharge Elimination System (NPDES) Permit, the City must amend its existing stormwater management and discharge control ordinance; and

WHEREAS, the implementation of these amended pollutant control measures is exempt from the provisions of the California Environmental Quality Act (CEQA); Chapter 3 (commencing with Section 21100) of Division 13 of the California Public Resources Code in accordance with Section 13389 of the California Water Code as provided in categorical exemption classes 7 and 8 of the CEQA Guidelines (Title 14, California Code of Regulations Section 15307 through 15308); and

WHEREAS, this proposed ordinance has been duly processed and the City Council has conducted legally noticed public hearings and provided all interested parties and opportunity to be heard on these issues.

NOW, THEREFORE BE IT ORDAINED BY THE COUNCIL OF SALINAS as follows:

Section 1: Chapter 29 of the Salinas City Code entitled Stormwater Management and Discharge Control is hereby amended as follows:

Article I. General.

Division 1. Title, Purpose and Definitions.

Sec. 29-1. Title.

Sec. 29-2. Purpose and intent.

Sec. 29-3. Definitions.

Division 2. General Provisions.

Sec. 29-4. Responsibility for administration.

Sec. 29-5. Construction and application.

Sec. 29-6. Severability and application.

Sec. 29-7. Taking.

Sec. 29-8. Effective date.

Article II. Discharge Regulations and Requirements.

Division 1. Discharge Prohibitions.

Sec. 29-9. General discharge prohibition--Illegal discharges.

Sec. 29-10. Discharges exempt from the general prohibition.

Sec. 29-11. Discharge in violation of permit.

Sec. 29-12. Requirement to eliminate illegal discharges.

Division 2. Illicit Connections.

Sec. 29-13. Illicit connections.

Sec. 29-14. Requirement to eliminate or secure approval for illicit connections.

Division 3. Reduction of Pollutants and Best Management Practices.

Sec. 29-15. Reduction of pollutants in stormwater.

Division 4. Spill Prevention and Notification.

Sec. 29-16. Spill prevention plan.

Sec. 29-17. Notification of spills.

Article III.

Division 1. Inspection and Enforcement.

Sec. 29-18. Authority to inspect.

Sec. 29-19. Violations constituting misdemeanors.

Sec. 29-20. Penalty for violation.

Sec. 29-21. Continuing violation.

Sec. 29-22. Violations; Abatement by the City.

Sec. 29-23. Concealment.

Sec. 29-24. Acts potentially resulting in violation of federal Clean Water Act and/or Porter-Cologne Act.

Sec. 29-25. Violations deemed a public nuisance.

Sec. 29-26. Recovery of Costs.

Sec. 29-27. Civil actions.

Sec. 29-28. Administrative enforcement powers.

Sec. 29-29. Authority to arrest or issue citations.

Sec. 29-30. Appeal.

Sec. 29-31. Judicial review.

Sec. 29-32. Remedies not exclusive.

Sec. 29-33. Disclaimer of liability.

Article IV. Coordination with Other Programs.

Sec. 29-34. Coordination with hazardous materials inventory and response program.

Sec. 29-1. Title.

This ordinance shall be known as the "City of Salinas Stormwater Management and Discharge Control Ordinance" and may be so cited. (Ord. No. 2350 (NCS), § 1.)

Sec. 29-2. Purpose and intent.

The purpose and intent of this chapter is to ensure the health, safety and general welfare of citizens, and protect the water quality of watercourses and water bodies in a manner pursuant to and consistent with the requirements of the NPDES permit issued to the City of Salinas by the California Regional Water Quality Control Board and the Federal Clean Water Act (33 U.S.C. Section 1251 et seq.) by reducing pollutants in urban stormwater discharges to the maximum extent practicable and by effectively prohibiting non-stormwater discharges to the storm sewer drain system. The provisions of this chapter shall be implemented and enforced in such a manner as to prevent or reduce downstream erosion, to protect stream habitat and to implement controls for the post-development runoff and discharges. To that end, development within the jurisdictional authority of the City of Salinas shall be done in a manner consistent with Low Impact Development guidance set forth in the Stormwater Development Standards document established by the City of Salinas.

Sec. 29-3. Definitions.

When used in this chapter, the following words shall have the meanings ascribed to them in this section:

(a) "Approval Authority" means the state of California Central Coast Regional Water Quality Control Board.

(b) "Authorized enforcement officer" means the City Engineer and those individuals designated by the City Engineer to enforce the provisions of this chapter.

(c) Authorized Representative of Industrial Activity (Use). An authorized representative of an industrial user may include, but is not limited to the following persons:

(1) A principal executive officer of at least the level of vice-president, if the industrial user is a corporation;

(2) A general partner or proprietor if the industrial user is a partnership or proprietorship, respectively; or

(3) A duly authorized representative of the individual designated above if such representative is responsible for the overall operation of the facility from which the discharge originates.

(d) "Best management practices (BMP)" means a program, schedule of activity, technology, process, siting criteria, operating method, measure, device, prohibition, practice (including, but not limited to, general housekeeping practices and pollution prevention practices), procedure or other management policy which effectively controls, prevents, removes or minimizes the discharge of pollutants, directly or indirectly to the municipal storm drain system and waters of the United States.

(e) "California general construction activities stormwater permit" means the general permit as adopted by the California State Water Resources Control Board for the permitting of stormwater discharges associated with construction activities.

(f) "California general industrial activities stormwater permit" means the general permit as adopted by the California State Resources Control Board for the permitting of stormwater discharges associated with given industrial activities.

(g) "Clean Water Act" means the federal Water Pollution Control Act (33 U.S.C. Section 1251 et seq.) and any subsequent amendments thereto and regulations adopted thereunder.

(h) "CFR" means the Code of Federal Regulations.

(i) "City" means the City of Salinas.

(j) "City Engineer" means the City Engineer of the City of Salinas

(k) "City storm sewer drainage system" or "storm drainage system" means and includes, but is not limited to, those facilities owned and operated by the City through which stormwater may be collected and/or conveyed to the waters of the United States, including flood control channels, any roads with drainage systems, municipal streets, catch basins, curbs, gutters, ditches, man-made channels or storm drains which are not part of a publicly-owned treatment works (POTW) as defined at 40 Code of Federal Regulations Section 122.2 and all conduits, pumping plants, collection facilities and other appurtenances owned and operated by the City of Salinas for carrying, collecting, pumping and/or disposing of stormwater, surface water, groundwater, roof runoff or other unpolluted water.

(k) "City's NPDES permit" means the municipal separate storm sewer system (MS4) permit issued to the City under Section 402(p) of the Clean Water Act.

(l) "Construction activity" means activities subject to the California general construction activities permit.

(m) "Development" means the construction, building or placement of any structure or portion thereof which would require a building permit.

(n) "Enforcement Officer" means the City Engineer or his designee.

(o) "Facility" means any nonresidential premises.

(p) "Hazardous materials" means any material, including any substance, waste or combination thereof, which because of its quantity, concentration or physical, chemical or infectious characteristics may cause, or significantly contribute to, a substantial present or potential hazard to human health, safety, property or the environment when improperly treated, stored, transported, disposed of or otherwise managed.

(q) "Illicit discharge" or "illegal discharge" means any direct or indirect non-stormwater discharge to the storm drain system, except as exempted in Section 29-10 of this chapter.

(r) "Illicit Connections." An illicit connection is defined as either of the following:

> (1) Any drain or conveyance, whether on the surface or subsurface, which allows an illegal discharge to enter the storm drain system including but not limited to any conveyances which allow any non-stormwater discharge including sewage, process wastewater and wash water to enter the storm drainage system and any connections to the storm drainage system from indoor drains and sinks, regardless of whether said drain or connection had been previously allowed, permitted or approved by a government agency; or
>
> (2) Any drain or conveyance connected from a commercial or industrial land use to the storm drainage system, which has not been documented in plans, maps or equivalent records and approved by the City.

(s) "Industrial activity" means any activity that involves manufacturing, processing or raw materials storage areas. Further definition of activities covered is given in 40 Code of Federal Regulations Section 122.26 (b).

(t) "Inspector" means an authorized enforcement officer as defined in this section.

(u) "Low Impact Development (LID) means the stormwater management approach towards development planning and design that minimizes post-construction stormwater runoff pollutant loads and stormwater runoff quantity, by promoting infiltration and biofiltration, and minimizing the installation of impervious surfaces. The LID design orientation is to minimize the site stormwater runoff impact of development by using design techniques that infiltrate, filter, store, evaporate, and detain runoff close to its source.

(v) "Maximum Extent Practicable" (MEP) is a standard for the control of pollutants required by Section 402(p) [33 U.S.C. §1342(p)] of the Clean Water Act requiring the application of practical, technologically feasible, and economically achievable management practices, including but not limited to, pollution control techniques, and system, design, and engineering methods.

(w) "National Pollutant Discharge Elimination System (NPDES) permit" means a permit issued by the Approval Authority pursuant to the Clean Water Act, which authorizes a discharge to the waters of the state.

(x) "Non-stormwater discharge" means any discharge to the storm drain system that is not entirely composed of stormwater.

(y) "Notice of intent (NOI)" means the formal notification to the State Regional Water Quality Control Board by the applicant that either a construction or industrial activity will occur in compliance with the conditions of the general permit and thereby commits the applicant to prepare and implement a stormwater pollution prevention plan.

(z) "Outfall" means the point at which the City's storm drainage system discharges to the waters of the state.

(aa) "Person" means any natural person, corporation, partnership, business trust, company, government agency, association or other entity.

(bb) "Point Source" means any discernible, confined and discrete conveyance including, but not limited to, any pipe, ditch, channel, tunnel, conduit, well, discrete fissure, container, rolling stock or vessel or other floating craft. (33 U.S.C. Sec. 1362(14); 40 C.F.R. Sec. 122.2)

(cc) "Pollutant" includes dredged soil, solid waste, incinerator residue, sewage, sewage sludge, munitions, chemical wastes, biological materials, radioactive materials, heat, wrecked or discarded equipment, rock, sand, cellar dirt and industrial, municipal and agricultural waste discharged into water; paints, varnishes and solvents; oil and other automotive fluids; non-hazardous liquid and solid wastes and yard wastes; refuse, rubbish, garbage, litter or other discarded or abandoned objects, articles and accumulations, so that same may cause or contribute to pollution; floatables; pesticides, herbicides and fertilizers; hazardous substances and wastes; animal wastes; wastes and residues that result from constructing a building or structure; and noxious or offensive matter of any kind.

(dd) "Pollution" means man-made or man-induced alteration of the chemical, physical, biological, or radiological integrity of water or other media.

(ee) "Porter-Cologne Act" means the Porter-Cologne Water Quality Control Act (California Water Code Section 13000 et seq.) and any subsequent amendments thereto and regulations adopted thereunder.

(ff) "Premises" means any building, lot parcel, real estate or land or portion of land, whether improved or unimproved, including adjacent sidewalks and parkway strips or other surface area which is capable of contributing runoff to the City's storm drainage system.

(gg) "Redevelopment" means any construction, alteration or improvement at an already developed site that will increase the total impervious surface area of that site. Redevelopment could include, but is not limited to, the expansion of building footprints, the addition or replacement of a structure, exterior construction or remodeling, replacement of existing impervious surfaces that is not part of a maintenance activity, and other activities that create additional impervious surfaces. "Significant Redevelopment" is a level of redevelopment at or above a defined threshold set forth in the Stormwater Development Standards.

(hh) "State" means the state of California.

(ii) "Stormwater" means stormwater runoff, snowmelt runoff, and surface runoff and drainage.

(jj) "Stormwater Control Plan" means a engineered plan with calculations for stormwater drainage and treatment. The plan shall show how runoff from each drainage area on a development or redevelopment project will be handled to meet the requirements of the Stormwater Development Standards.

(kk) "Stormwater Management Program" means a comprehensive planning process to reduce discharge of pollutants to the maximum extent practicable using best management practices.

(ll) "Stormwater Management Facility" means any device designated to detain, retain, filter or infiltrate stormwater.

(mm)"Stormwater Development Standards" means the current City of Salinas Stormwater Development Standards and any amendments and/or supplements thereto.

(nn) "Stormwater Pollution Prevention Plan (SWPPP)" means the report required to be prepared by industrial or construction site stormwater dischargers, which sets forth the site map, identifies the activities that have the potential to pollute stormwater and describes the proposed BMPs to be implemented by the discharger.

(oo) "User" means any person who contributes, causes or permits the contribution of stormwater to the City's storm drainage system.

(pp) "Unpolluted water" means water to which no pollutant has been intentionally or accidentally introduced so as to render such water unacceptable to the City for disposal to storm or natural drainages or directly to surface waters.

(qq) "Waters of the state" means surface watercourses, and water bodies as defined at 40 CFR Section 122.2 and any subsequent amendment. (Ord. No. 2350 (NCS), § 1.)

(rr) "Waters of the U.S." or "waters of the United States" shall have the meaning set forth in 40 CFR §122.2.

Sec. 29-4. Responsibility for administration.

This part shall be administered by the City Engineer for the City of Salinas and authority to enforce this part is delegated to the City Engineer and his designee(s). (Ord. No. 2350 (NCS), § 1.)

Sec. 29-5. Construction and application.

The rules and regulations set forth in this chapter shall be construed in a manner consistent with and shall in no way be construed in such a manner so as to diminish the authority of the requirements of the Clean Water Act; the Porter-Cologne Act; the City of Salinas NPDES municipal separate storm sewer system permit and any amendment, revision or reissuance thereof; and all other provisions contained in the Salinas Municipal Code. (Ord. No. 2350 (NCS), § 1.)

Sec. 29-6. Severability and application.

If any portion of this chapter is declared invalid, the remaining portions of this chapter are to be considered severable and valid. (Ord. No. 2350 (NCS), § 1.)

Sec. 29-7. Taking.

The provisions of this chapter shall not operate to deprive any landowner of substantially all of the market value of his or her property or otherwise constitute an unconstitutional taking without compensation. If application of this chapter to a specific project would create a taking, then pursuant to the chapter the City Council may allow additional land uses; but only to the extent necessary to avoid a taking. Such uses shall be consistent with and carry out the purposes of this chapter as stated in Section 29-2. (Ord. No. 2350 (NCS), § 1.)

Sec. 29-8. Effective date.

This ordinance codified in this chapter will take effect thirty days from the date of passage, and shall be published following passage as required by the California Government Code. (Ord. No. 2350 (NCS), § 1.)

Sec. 29-9. General discharge prohibition--Illegal discharges.

Non-stormwater discharges to the City storm drain system are prohibited, except as specifically allowed in Section 29-10. No person shall contribute or cause to be contributed, directly or indirectly, to the City's storm drainage system any pollutant, wastewater or any substance or material which will interfere with the operation or performance of the storm drainage system, violate the City's NPDES permit or violate other applicable law or regulations. (Ord. No. 2350 (NCS), § 1.)

Sec. 29-10. Discharges exempt from the general prohibition.

(a) The general discharge prohibition shall not apply to any discharge regulated under an NPDES permit, or, in the case of a non-point source discharge, a waiver or waste discharge order issued to the discharger and administered by the State of California under the authority of the United States Environmental Protection Agency ("USEPA"), provided that the discharger is in full compliance with all requirements of the permit, waiver or order and other applicable laws or regulations.

(b) Unless otherwise determined by the City Engineer, discharges from the following activities shall not be considered a source of pollutants to waters of the United States when properly managed to ensure that no potential pollutants are present, and therefore they shall not be considered illegal discharges unless determined to cause a violation of the provisions of the Porter-Cologne Act, Clean Water Act, or this chapter:

(1) Diverted stream flows
(2) Rising ground waters
(3) Uncontaminated ground water infiltration [as defined by 40 CFR 35.2005(20)]
(4) Uncontaminated pumped ground water
(5) Foundation drains
(6) Springs
(7) Water from crawl space pumps
(8) Footing drains
(9) Air conditioning condensation
(10) Flows from riparian habitats and wetlands
(11) Water line flushing
(12) Lawn and landscape irrigation from potable water sources
(13) Discharges from potable water sources
(14) Irrigation water
(15) Individual residential car washing
(16) De-chlorinated or de-brominated swimming pool / spa water

(c) Discharges or flows from firefighting activities are excluded from the non-stormwater discharge prohibition and need only be addressed where identified as significant sources of pollutants to water of the United States. (Ord. No. 2350 (NCS), § 1.)

Sec. 29-11. Discharge in violation of permit.

Any discharge not managed in accordance with the City's Stormwater Management Program as referenced in the City's NPDES permit or any amendment, revision or reissuance thereof, either separately considered or when combined with other discharges,

is prohibited. Liability for any such discharge shall be the responsibility of the person(s) causing or responsible for the discharge, and such person(s) shall defend, indemnify, and hold the City harmless against any litigation, administrative proceeding, claim, expense, liability, fine, penalty or payment for injury or damage to any person or property resulting from such discharges. (Ord. No. 2350 (NCS), § 1.)

Sec. 29-12. Requirement to eliminate illegal discharges.

(a). An authorized enforcement officer may require by written notice that a person responsible for an illegal discharge immediately, or by a specified date, discontinue the discharge and, if necessary, take measures to eliminate the source of the discharge to prevent the occurrence of future illegal discharges. (Ord. No. 2350 (NCS), § 1.)

(b). Unauthorized non-stormwater discharges include, but are not limited to, the following:

(1). Sanitary sewer overflows;

(2). Discharges of wash water resulting from the hosing off or cleaning of gas stations, vehicle repair services, or other types of automotive service facilities;

(3). Discharges resulting from the storage, cleaning, repair, or maintenance of any type of equipment, machinery, or facility including, but not limited to, motor vehicles, cement-related equipment, and portable toilet servicing;

(4). Discharges of wash water from mobile operations including, but not limited to, mobile vehicle washing, steam cleaning, power washing, and carpet cleaning;

(5). Discharges of wash water from the cleaning of impervious surfaces in municipal, industrial and commercial areas including, but not limited to, parking lots, streets, sidewalks, driveways, patios, plazas, work yards and outdoor eating or drinking areas;

(6). Discharges of runoff from material storage areas containing chemicals, fuels, grease, oil, or other hazardous materials;

(7). Discharges of pool or fountain water containing chlorine, biocides, or other chemicals and discharges of pool or fountain filter backwash water;

(8). Discharges of sediment, pet waste, vegetation clippings, or other landscape or construction-related wastes;

(9). Discharges of food-related wastes (e.g., grease, fish processing, and restaurant kitchen mat and trash bin wash water);

(10). Discharge of runoff from washing toxic materials from paved or unpaved areas; and

(11). Discharge of materials such as litter, landscape debris, construction debris, or any state or federally banned pesticides

Sec. 29-13. Illicit connections.

It is unlawful for any person to establish, use, maintain or continue illicit discharges or illicit drainage connections to the City storm drainage system. This prohibition shall apply to connections in existence at the time of the adoption of the ordinance codified in this chapter, irrespective of whether such connection was made under a permit or other authorization or whether permissible under the law or practices applicable or prevailing at the time the connection was made. (Ord. No. 2350 (NCS), § 1.)

Sec. 29-14. Requirement to eliminate or secure approval for illicit connections.

The authorized enforcement officer may require by written notice that a person responsible for an illicit connection to the storm drain system comply with the requirements of this article to eliminate or secure approval for the connection by a specified date, regardless of whether or not the connection or discharges to it had been established or approved prior to the effective date of this article.

If, subsequent to eliminating a connection found to be in violation of this article, the responsible person can demonstrate that an illegal discharge will no longer occur, such person may request City approval to reconnect. The reconnection or reinstallation of the connection shall be at the responsible person's expense. (Ord. No. 2350 (NCS), § 1.)

Sec. 29-15. Reduction of pollutants in stormwater.

Storm water runoff, soil erosion and non-point source pollution can be controlled and minimized through the regulation of storm water runoff from development sites. These goals are achieved by designing sites that disturb only the smallest area necessary, minimize soil compaction and imperviousness, preserve natural drainages, vegetation and buffer zones, and utilize on-site storm water treatment techniques. These principles and techniques are collectively known as Low Impact Development (LID). The California Regional Water Resources Control Board has determined that LID techniques are effective, feasible and economically practical, and that they are a component of the maximum extent practicable (MEP) standard as defined in section 29-3 of this chapter.

Any person engaged in activities, which will, or may result in pollutants entering the City storm drainage system or which may otherwise cause or contribute to pollution shall undertake all feasible measures to reduce the introduction of such pollutants, including the implementation of LID techniques. Where best management practices requirements are promulgated by the City or any federal, state or regional agency for any activity, operation or facility which would otherwise cause the discharge of pollutants to the storm drain system or waters of the United States, every person undertaking such activity or operation, or owning or operating such facility shall comply with such requirements.

The City's Stormwater Management Program shall establish minimum requirements that apply to pollutant generating activities within the City. With regard to such activities, the following minimum requirements shall apply. Where applicable, the requirements of paragraphs (d) through (h) shall be made conditions of any ministerial or discretionary building permit.

(a) Littering. No person shall throw, deposit, leave, maintain, keep or permit to be thrown, deposited, placed or left, any refuse, rubbish, garbage or other discarded or abandoned objects, articles and accumulations, in or upon any street, alley, sidewalk, storm drain, inlet, catch basin, conduit or any other drainage structures, business place or upon any public or private plot of land in the City, so that the same might be or become a pollutant. No person shall throw or deposit litter in any fountain, pond, lake, stream or any other body of water in a park or elsewhere in the City. This section shall not apply to the storing of such potential pollutants in containers or in lawfully established waste disposal facilities.

(b) Owners of Abutting Property. The occupants, tenants, owners, lessees and/or proprietors of any real property in the City of Salinas in front of which there is a paved sidewalk shall be responsible for maintaining such sidewalk and keeping the same free of dirt and litter. Sweepings from such sidewalk shall not be swept or otherwise made or allowed to go into the gutter or roadway, but shall be disposed of in receptacles maintained on such real property as required for the disposal of garbage.

(c) Owners and Operators of Parking Lots and Similar Structures. Persons owning or operating a paved parking lot, gas station pavement, paved private street or road, or similar structure, shall clean those structures in a manner that does not result in discharge of pollutants to the City storm drain system.

(d) Best Management Practices for Construction Sites. All construction shall comply with the City of Salinas Standards to Control Excavations, Cuts, Fills, Clearing, Grading, Erosion and Sediments, as adopted by the City Council and as the same may be amended from time to time. Any construction contractor performing work in the City shall keep debris and dirt out of the City's storm drain system. The authorized enforcement officer may require any construction contractor performing work in the City to submit a stormwater pollution prevention plan prior to final map approval by city or prior to issuance of a building permit by City , whichever occurs first.

(e) Implementation of Post-Construction Pollutant Control Strategies. Every person undertaking any new development or significant redevelopment, as defined herein, that may discharge pollutants to waters of the United States or cause or contribute to pollution, shall implement Low Impact Development (LID) strategies and/or structural treatment control BMPs as specified in the Stormwater Development Standards or other applicable standards adopted by the City. Every such person shall also implement any additional storm water control strategies specified by the City Engineer based on site or project considerations. All new development and significant redevelopment, as defined herein, shall develop and implement a storm water control plan, as defined herein, demonstrating how the site's drainage will be managed. The storm water control plan shall be included in the building permit application. The approved plan shall become a condition of the building permit. These requirements apply to both ministerial and discretionary projects.

Any person subject to this paragraph shall be solely responsible for any costs and expenses necessary to develop and implement the LID and/or structural treatment control BMPs and shall be solely responsible for the ongoing maintenance of such features. All storm water treatment practices shall have an enforceable operation and maintenance agreement to ensure the system functions as designed. This agreement will include any and all maintenance easements required to access and inspect the storm water treatment practices,

and to perform routine maintenance as necessary to ensure proper functioning of the storm water treatment practice. All applicable building permits shall have, as a requirement of the permit, an enforceable operation and maintenance agreement. In addition, a legally binding covenant specifying the parties responsible for the proper maintenance of all storm water treatment practices shall be secured prior to issuance of a certificate of occupancy.

Prior to the issuance of any permit that requires a storm water management facility, the applicant or owner of the site must execute a maintenance easement or agreement that shall be binding on all subsequent owners of land served by the storm water management facility. The easement or agreement shall provide for access to the facility at reasonable times for periodic inspection by the City, or its contractor or agent, and for regular or special assessments of property owners to ensure that the facility is maintained in proper working condition to meet Stormwater Development Standards and any other requirements of this Chapter. The easement or agreement shall be recorded by the owner of record prior to issuance of a certificate of final occupancy.

Maintenance of all storm water management facilities shall be ensured through the creation of an easement or other maintenance covenant that must be approved by the City and recorded prior to final plan approval. The City, in lieu of a maintenance covenant, may accept dedication of any existing or future storm water management facility for maintenance, in accordance with the Stormwater Development Standards.

The City Engineer may only exempt requirements for LID strategies or other development standards in accordance with a waiver program incorporated into in the Stormwater Development Standards, and only in circumstances where, in the opinion of the City Engineer, it is not feasible to implement; or where implementation of such requirements would provide no benefit to water quality.

(f) Notification of Intent and Compliance with General Permits. Each industrial discharger, discharger associated with construction activity, or other discharger, described in any general stormwater permit addressing such discharges, as may be adopted by the USEPA, the State Water Resources Control Board, or the California Regional Water Quality Control Board, Central Coast Region, shall provide notice of intent, comply with, and undertake all other activities required by any general stormwater permit applicable to such discharges unless the discharger is covered by an individual permit. Each discharger identified in an individual NPDES permit relating to stormwater discharges shall comply with and undertake all activities required by such permit. Violation of any applicable general or individual NPDES storm water permit shall constitute a violation of this chapter.

(g) Compliance with Best Management Practices. Where best management practices guidelines or requirements have been defined in City ordinances, the Stormwater Development Standards, the City's Stormwater Management Program, by the City Engineer or adopted by any federal, state, regional, county and/or City agency, for any activity, operation or facility which may cause or contribute to stormwater pollution or contamination, and/or discharges of non-stormwater to the stormwater system or waters of the United States, provided the same is first determined by the City Engineer to be equivalent, every person undertaking such activity or operation or use of premises, or owning or operating any facility, that may cause or contribute to stormwater pollution or contamination, illegal discharges or non-stormwater discharges shall comply with such

guidelines or requirements. Any person engaged in activities or operations, or owning facilities or property which will or may result in pollutants entering stormwater, the storm drainage system or waters of the U.S. shall implement best management practices to the extent they are technologically achievable to prevent or reduce the discharge or runoff of such pollutants.

(h) Watercourse Protection. Every person owning property through which a watercourse passes, or such person's lessee, shall keep and maintain that part of the watercourse within the property reasonably free of trash, debris, excessive vegetation and other obstacles that would cause or contribute to pollution or significantly retard the flow of water through the watercourse, except as prohibited by the regulations of the California Department of Fish and Game. In addition, the owner or lessee shall maintain existing privately owned structures within or adjacent to a watercourse, so that such structures will not become a hazard to the use, function or physical integrity of the watercourse. The owner or lessee shall not remove healthy bank vegetation beyond that actually necessary for maintenance, nor remove such vegetation in such a manner as to increase the vulnerability of the watercourse to erosion. The property owner shall be responsible for maintaining and stabilizing that portion of the watercourse that is within their property lines in order to protect against erosion and degradation of the watercourse originating or contributed from their property. (Ord. No. 2350 (NCS), § 1.)

Sec. 29-16. Spill prevention plan.

Each facility shall provide protection from spills of hazardous or prohibited materials or other substances regulated by this chapter. The methods, procedures, mechanisms and facilities established and utilized for the purpose of preventing accidental discharges or spills of materials with pollution potential shall be provided and maintained at the owner's own cost and expense.

Facilities required to file a NOI for coverage under the California general industrial activities stormwater permit shall submit to the city a copy of the stormwater pollution prevention plan (SWPPP) prepared for the general permit. The SWPPP shall outline the user's spill prevention and response procedure, describe the nature and location of any chemicals stored on the user's premises and shall contain procedures for immediately notifying the City and preventing adverse impacts of any discharge of such chemicals, substances or materials. (Ord. No. 2350 (NCS), § 1.)

Sec. 29-17. Notification of spills.

All persons in charge of a facility or responsible for emergency response for a facility have a personal responsibility to train facility personnel and maintain notification procedures to assure immediate notification is provided to the City of any suspected, confirmed or unconfirmed release of material, pollutants or waste creating a risk of discharge into the City storm drain system.

As soon as any person in charge of a facility or responsible for emergency response for a facility has knowledge of any suspected, confirmed or unconfirmed release of materials, pollutants or waste which may result in pollutants or non-stormwater discharge entering the City storm drain system, such person shall take all necessary steps to ensure the discovery, containment and clean up of such release and notify the City of the occurrence.

In the event of a release of hazardous materials, such person shall telephone 911 to report the release immediately. In the event of a release of non-hazardous materials, see Section 29-3(q), such person shall notify the City of Salinas, Maintenance Services Department in person or by phone or facsimile no later than 5:00 p.m. of the next business day. Notifications in person and by phone shall be confirmed by written notice addressed and mailed, within three business days, to the Maintenance Services Director, City of Salinas, 426 Work Street, Salinas CA 93901, Attention: Spill Notification.

Notification shall identify the location of the discharge, the type, concentration and volume of waste, and corrective actions taken and/or anticipated. Such notification shall not relieve the user of any expense, loss, damage or other liability which may be incurred as a result of damage to the City, fish kills, or any other damage to person or property; nor shall such notification relieve the user of any fines, civil penalties or other liabilities which may be imposed by this part or other applicable law.

A notice advising employees whom to call in the event of an accidental discharge or spill shall be posted on the user's bulletin board or other prominent place. Employers shall provide spill prevention and response training for all employees who may cause an accidental discharge or spill to occur. (Ord. No. 2350 (NCS), § 1.)

Sec. 29-18. Authority to inspect.

(a) Whenever necessary to make an inspection to enforce any of the provisions of this chapter, or whenever an authorized enforcement officer has reasonable cause to believe that there exists in any building or upon any premises any condition which constitutes a violation of the provisions of this chapter, the officer may enter such building or premises at all reasonable times to inspect the same or perform any duty imposed upon the officer by this chapter, provided that (i) if such building or premises be occupied, he or she shall first present proper credentials and request entry; and (ii) if such building or premises be unoccupied, he or she shall first make a reasonable effort to locate the owner or other persons having charge or control of the building or premises and request entry.

Any such request for entry shall state that the property owner or occupant has the right to refuse entry and that in the event such entry is refused, inspection may be made only upon authorization by a duly authorized court.

(b) Routine or area inspections shall be based upon such reasonable selection processes as may be deemed necessary to carry out the objectives of this chapter, including but not limited to random sampling and/or sampling in areas with evidence of stormwater contamination, illicit discharges, discharge of non-storm-water to the stormwater system, or similar factors.

(c) Authority to Sample and Establish Sampling Devices. Any authorized enforcement officer may establish on any property such devices as are necessary to conduct sampling or metering operations. During all inspections as provided herein, the officer may take any samples deemed necessary to aid in the pursuit of the inquiry or in the recordation of the activities on-site.

(d) Requirement to Test or Monitor. Any authorized enforcement officer may require that any person engaged in any activity and/or owning or operating any facility which may

cause or contribute to stormwater pollution or contamination, illicit discharges and/or discharges of non-stormwater to the stormwater system, undertake such monitoring activities and/or analyses and furnish such reports as the officer may specify. The burden, including costs, of these activities, analyses and reports shall bear a reasonable relationship to the need for the monitoring, analyses and reports and the benefits to be obtained. The recipient of such request shall undertake and provide the monitoring, analyses and reports required.

In the event the owner or operator of a facility subject to a monitoring and/or analyses order fails to conduct required monitoring and/or analyses and furnish the required reports in the form required, the authorized enforcement officer may cause such monitoring and/or analyses to be completed and the cost of which, including the reasonable additional administrative costs incurred by the City shall be borne by the owner of the property and the cost thereof shall be invoiced to the owner of the property. Whenever the full amount of such costs has not been paid within ninety (90) days from the date of notice of such costs, the City may take whatever action is available to it in order to recover such costs. This obligation may constitute a lien or, in the alternative, a special assessment against the real property on which the violation occurred. (Ord. No. 2350 (NCS), § 1.)

Sec. 29-19. Violations constituting misdemeanors.

The violation of any provision of this chapter, or failure to comply with any of the mandatory requirements of this chapter shall constitute a misdemeanor; except that notwithstanding any other provisions of this chapter, any such violation constituting a misdemeanor under this chapter may, at the discretion of an authorized enforcement officer be enforced pursuant to any available legal remedy including the City's Administrative Remedies Ordinance (Chapter 1, Article II of this Code). (Ord. No. 2350 (NCS), § 1.)

Sec. 29-20. Penalty for violation.

Upon conviction of a misdemeanor, a person shall be subject to payment of a fine, or imprisonment, or both, not to exceed the limits set forth in California Government Code Section 36901.

Sec. 29-21. Continuing violation.

Unless otherwise provided, a person, firm, corporation or organization shall be deemed guilty of a separate offense for each and every day during any portion of which a violation of this chapter is committed, continued or permitted by the person, firm, corporation or organization and shall be punishable accordingly as herein provided. (Ord. No. 2350 (NCS), § 1.)

Sec. 29-22. Violations; Abatement by the City.

(a) If any violation of this chapter has not been corrected pursuant to the requirements set forth by the City, the City shall enter upon the subject private property and is authorized to take any and all measures necessary to abate the violation and/or restore the property. It shall be unlawful for any person, owner, agent or person in possession of any premises to refuse to allow the City to enter upon the premises for the purposes set forth herein.

(c) Within thirty (30) days after abatement of the violation by the City, the City Engineer or an enforcement officer shall notify the property owner, as shown on the last equalized assessment roll, of the cost of abatement, which shall include all costs relating to the abatement and administrative costs incurred by the City. Such costs may become a lien or special assessment against the real property on which the violation occurred.

The owner may file a written protest objecting to the amount of the assessment with the City Clerk within thirty (30) days of the date of the notification of costs. The City Clerk shall set the matter for a public hearing by the City Council. The decision of the Council shall be final. Failure to timely protest the amount of the abatement as provided herein shall constitute a failure to exhaust administrative remedies and no further appeal rights shall be granted.

If such costs are not paid within ninety (90) days of the date of the Council's final determination of the matter, or if the determination of the City Council as set forth above has not been successfully challenged by a timely writ of mandate, the obligation may constitute a lien or, in the alternative, a special assessment against the property on which the violation occurred.

(c) The City Engineer or designated enforcement officer is authorized to require immediate abatement of any violation of this chapter that constitutes an immediate threat to the health, safety or welfare of the public. If any such violation is not abated immediately as directed by the City Engineer or designated enforcement officer, the City of Salinas is authorized to enter onto the property and to take any and all measures required to remediate the violation. Any expense related to such remediation undertaken by the City of Salinas shall be fully reimbursed by the property owner and/or responsible party. Any relief obtained under this section shall not prevent the City from seeking other and further relief authorized under this Chapter.

(d) If any violation of this chapter constitutes a seasonal and recurrent nuisance, the City Engineer shall so declare. Thereafter such seasonal and recurrent nuisance shall be abated every year without the necessity of further learning. If the City prevails in any administrative or civil proceedings initiated under this chapter, the City shall be entitled to seek reimbursement for all costs incurred in connection with such proceeding. Such reimbursable costs may include, but are not limited to, the costs of investigation, administrative overhead, out-of-pocket expenses, costs of administrative hearings, costs of suit, and reasonable attorney fees.

Sec. 29-23. Concealment.

Causing, permitting, aiding, abetting or concealing a violation of any provision of this chapter shall constitute a violation of such provision. (Ord. No. 2350 (NCS), § 1.)

Sec. 29-24. Acts potentially resulting in violation of federal Clean Water Act and/or Porter-Cologne Act.

Any person who violates any provision of this chapter, any provision of any permit issued pursuant to this chapter, or who discharges waste or wastewater which causes pollution, or who violates any cease and desist order, prohibition, or effluent limitation, may also be in violation of the federal Clean Water Act and/or Porter-Cologne Act and may be subject to

the sanctions of those acts including civil and criminal penalty. Any enforcement action authorized under this article should also include notice to the violator of such potential liability. (Ord. No. 2350 (NCS), § 1.)

Sec. 29-25. Violations deemed a public nuisance

In addition to the penalties hereinbefore provided, any condition caused or permitted to exist in violation of any of the provisions of this chapter is deemed a threat to the public health, safety and welfare, and is declared and deemed to be a public nuisance, and may be summarily abated and/or restored by the authorized enforcement officer, and/or civil action to abate, enjoin or otherwise compel the cessation of such nuisance may be taken by the City Attorney. Any costs or expenses incurred by the City in violating such nuisance shall be recoverable by the City as set forth in this Chapter.

Sec. 29-26. Recovery of Costs.

In addition to any fine or penalty imposed, whenever any discharger introduces or causes the introduction of non-stormwater or any pollutant in violation of this chapter and the discharge results in a violation of any State or Federal laws or regulations, in violation of the City's NPDES Permit, damages pubic property, or adversely affects the City's storm drainage system or receiving waters, the discharger shall be liable to the City for reasonable costs necessary to correct such discharge, detriment or adverse effect, including, but not limited to costs of investigation, inspection or re-inspection, and any other costs and expenses incurred by the City in association with the corrective action or the clean-up of the pollutant and its effects.

All costs incurred by the City shall be a personal obligation of the discharger and any owner of any property that is the source of any discharge, and may be recovered by the City by any available legal remedies. In addition to this personal obligation and all other remedies provided by law, the City may collect any judgment, fee, cost or charge, including any permit fees, fines, late charges or interest incurred by it in enforcing the provisions of this chapter.

Sec. 29-27. Civil actions.

In addition to any other remedies provided in this chapter, any violation of this chapter may be enforced by civil action brought by the City. In any such action, the City may seek, and the court may grant, as appropriate, any or all of the following remedies:

(a) A temporary and/or permanent injunction;

(b) Assessment against the violator for the costs of any investigation, inspection, or monitoring survey, which led to the discovery of the violation, and for the reasonable costs incurred in preparing and prosecuting legal action as a result of violations of this Chapter.

(c) Costs incurred in removing, correcting, or terminating the adverse effects resulting from the violation.

(d) Compensatory damages for loss or destruction to water quality, wildlife, fish and aquatic life.

(e) Such other relief as the court may authorize. Assessments under this subsection shall be paid to the City to be used exclusively for costs associated with monitoring and establishing storm water discharge pollution control systems and/or implementing or enforcing the provisions of these standards. (Ord. No. 2350 (NCS), § 1.)

Sec. 29-28. Administrative enforcement powers.

In addition to the other enforcement powers and remedies established in this chapter, the authorized enforcement officer has the authority to utilize the following administrative remedies.

(a) Cease and Desist Orders. When the authorized enforcement officer finds that a discharge has taken place or is likely to take place in violation of this chapter, the officer may issue an order to cease and desist such discharge, or practice, or operation likely to cause such discharge and direct that those persons not complying shall: (a) comply with the requirement, (b) comply with a time schedule for compliance, and/or (c) take appropriate remedial or preventive action to prevent the violation from recurring.

(b) Notice to Clean. Whenever the authorized enforcement officer finds any oil, earth, dirt, grass, weeds, dead trees, tin cans, rubbish, refuse, waste or any other material of any kind, in or upon the sidewalk abutting or adjoining any parcel of land, or upon any parcel of land or grounds, which may result in an increase in pollutants entering the City storm drain system or a non-stormwater discharge to the City storm drain system, he or she may give formal written notice to remove such oil, earth, dirt, grass, weeds, dead trees, tin cans, rubbish, refuse, waste or other material in any manner that he or she may reasonably provide. The authorized enforcement officer shall specify in site notice the time allotted for compliance and the recipient of such notice shall undertake the activities necessary to abate such condition within the period of time specified. In the event the owner or operator of a facility fails to conduct the required activities as described in the notice, the authorized enforcement officer may cause such required activities as described in the notice and the cost thereof shall be invoiced to the owner of the property. (Ord. No. 2350 (NCS), § 1.)

(c) Referral. The City may also report violations to the Monterey County Water Resources Agency, State Regional Water Control Board, or California Department of Fish and Game for action as appropriate. Such actions may be taken for failure to respond appropriately to a cease and desist order or if evidence indicates that the violator acted willfully with intent to cause, allow to continue, or conceal discharge in violation of the ordinance.

Sec. 29-29. Authority to arrest or issue citations.

Duly authorized peace officers for the City shall have and are vested with the authority to arrest or cite and release any person who violates the provisions of this chapter, in the manner provided by California Penal Code Section 849.

It is the intent of the City Council that the immunities prescribed in Section 836.5 of the Penal Code which apply to public officers or employees in the discharge of their duties within the course and scope of their employment shall apply to all actions taken by such peace officers or other City employees in discharging their duties in accordance with this part. (Ord. No. 2350 (NCS), § 1.)

Sec. 29-30. Appeal.

Any person, firm, corporation or organization required to perform monitoring, analyses, reporting, and/or corrective activities by the authorized enforcement officer who is aggrieved by the decision of the City Engineer or an authorized enforcement officer may appeal such decision to the City Manager within fifteen days following the effective date of the decision by furnishing written request for an appeal to the City Manager. Upon receipt of such request, the City Manager or his designee may request a report and recommendation from the City Engineer or authorized enforcement officer and shall set the matter for hearing at the earliest practical date. At such hearing, the City Manager or his designee shall hear any evidence presented by the appellant and the City Engineer or enforcement officer, and may reject, affirm or modify the authorized enforcement officer's decision. Such decision shall be the City's final administrative determination of the matter. (Ord. No. 2350 (NCS), § 1.)

Sec. 29-31. Judicial review.

The provisions of Sections 1094.5 and 1094.6 of the California Code of Civil Procedure are applicable to judicial review of City decisions pursuant to this chapter. (Ord. No. 2350 (NCS), § 1.)

Sec. 29-32. Remedies not exclusive.

Remedies under this article are in addition to and do not supersede or limit any and all other remedies, civil or criminal. The remedies provided for herein shall be cumulative and not exclusive. (Ord. No. 2350 (NCS), § 1.)

Sec. 29-33. Disclaimer of liability.

The degree of protection required by this chapter is considered reasonable for regulatory purposes and is based on scientific, engineering and other relevant technical considerations. The standards set forth herein are minimum standards and this division does not imply that compliance will ensure that there will be no unauthorized discharge of pollutants into the waters of the United States. This chapter shall not create liability on the part of the City or any officer or employee thereof for any damages that result from reliance on this chapter or any administrative decision lawfully made thereunder. (Ord. No. 2350 (NCS), § 1.)

Sec. 29-34. Coordination with hazardous materials inventory and response program.

The first revision of the business plan for any facility subject to the City's hazardous materials inventory and response program shall include a program for compliance with this chapter, including the prohibitions on non-stormwater discharges and illicit discharges, and the requirement to reduce stormwater pollutants to the maximum extent practicable. (Ord. No. 2350 (NCS), § 1.)

Section 2. If any section, subsection, sentence, clause or phrase of this ordinance is for any reason held to be invalid or unconstitutional by a decision of any court of any competent jurisdiction, such decision shall not affect the validity of the remaining portions

of this ordinance. The Salinas City Council hereby declares that it would have passed this ordinance, and each and every section, subsection, clause and phrase thereof not declared invalid or unconstitutional without regard to whether any portion of the ordinance would be subsequently declared invalid or unconstitutional.

SECTION 3. This ordinance shall take effect thirty (30) days from and after its adoption.

SECTION 4. The City Clerk of the City of Salinas is hereby directed to cause the following summary of this ordinance to be published by one (1) insertion in The Salinas Californian, a newspaper of general circulation printed, published, and circulated in the City of Salinas and hereby designated for that purpose by the Council of Salinas:

> "Chapter 29 of the Salinas City Code is hereby amended to update and revise the requirements related to stormwater management and discharge control within the City of Salinas."

This ordinance was introduced and read on the _____ day of _____2007, and passed and adopted on the ____ day of _____ 2007, by the following vote:

AYES:

NOES:

ABSTAIN:

ABSENT:

_____
Dennis Donohue, Mayor

ATTEST:

_____
Ann Camel, City Clerk

STANDARDS TO CONTROL EXCAVATIONS, CUTS, FILLS, CLEARING, GRADING, EROSION AND SEDIMENT
CITY OF SALINAS
2007

TABLE OF CONTENTS

SECTION		*PAGE*
1	Scope & Intent	1
2	Definitions	1-6
3	General Provisions	6-8
4	Hazardous Conditions	8
5	Permit Applications and Requirements	8-11
6	Permit Exemptions	11-12
7	Fees	13
8	Sureties	13
9	Design Standards for Excavations	13-15
10	Design Standards for Fills	15-17
11	Design Standards for Cut & Fill Setbacks	17-18
12	Design Standards for Drainage and Terraces	18-20
13	Design Standards for Erosion and Sediment Control	20-25
14	Inspection and Compliance	25-26

SECTION 1 SCOPE AND INTENT These standards sets forth guidelines, rules, regulations and minimum standard to control excavation, grading, clearing, erosion control, and maintenance, including cut and fill embankments; requires control of all existing and potential condition of accelerated erosion; requires protection of surface water quality by prevention of soil erosion and transport of soil sediments or other pollutants; establishes administrative procedures for issuance of permits; and provides for approval of plans and inspections during construction and maintenance.

SECTION 2 DEFINITIONS When used in these standards, the following words shall have the meanings ascribed to them in this section:

(a) "Accelerated Erosion" - Rapid erosion caused by human induced alteration of the vegetation, land surface topography or runoff patterns. Evidence of accelerated erosion is indicated by exposed soils, active gullies, rills, sediment deposits, or slope failures caused by human activities.

(b) "Access and Building Envelope" - An area delineated on the site plan within which all grading, land clearing, and other disturbances for construction of access and/or building will be confined.

(c) "Applicant" - shall refer to a project or permit applicant (see "Permitee").

(d) "Bedrock" - In place, solid, undisturbed rock.

(e) "Bench" - A relatively level step excavated into earth material on which fill is to be placed.

(f) "Best Management Practice (BMP)" - A technique, series of techniques, or device which, when utilized in a designated manner, is proven to be effective in minimizing runoff and the quantity of pollutants that enter the storm drain system. Sedimentation and other products of erosion are considered pollutants to the storm drain system.

(g) "Borrow" - Earth material acquired from an offsite or other onsite location for use in grading on a site.

(h) "City Engineer" -The City Engineer or his designated representative is responsible for the administration and enforcement of these standards.

(i) "Civil Engineer" - A professional Engineer registered in California to practice Civil Engineering works.

(j) "Clearing" - The removal of vegetation and debris down to bare soil by any method.

(k) "Compaction" - The densification of earth and solids or fill by mechanical means.

(l) "Development Permit" - A permit issued for new land use activities, minor land division, building, grading, land clearing, subdivision, planned unit development, and major plan development.

(m) "Drainage Course" - A well-defined, natural or manmade channel, which conveys storm water runoff either year round or intermittently.

(n) "Earth Material" - Rock, natural soil or any combination thereof.

(o) "Engineering Geologist" - A professional geologist registered in California to practice Engineering Geology.

(p) "Erosion" - The wearing away of the ground surface by the actions of water, wind, ice, gravity, or a combination thereof.

(q) "Erosion Hazards" - The susceptibility of a site to erode based on soils, condition and steepness of a slope, rock type, vegetation, and other site factors.

(r) "Erosion Control Measures" – Design features and management practices intended to prevent soil, rock or other material from being dislodged and moved down slope by storm water flows and wind.

(s) "Excavation" - The mechanical removal of earth materials.

(t) "Fill" - The deposit of earth materials by artificial means.

(u) "Grade" - The vertical location of the ground surface or the degree of rise or descent of a slope.

(i) "Existing Grade" -The grade prior to any land disturbance or grading.

(ii) "Rough Grade" -An approximate elevation of the ground surface conforming to the proposed design.

(iii) "As Graded or Finished Grade" -The final grade which conforms to the approved plan.

(v) "Grading" - Any excavation, filling, leveling, or combination thereof (excludes stripping and/or clearing).

(w) "Key" - A designed, compacted fill placed on a bench excavated in undisturbed earth material beneath the toe of a proposed fill slope to develop shearing resistance (see Figure 1).

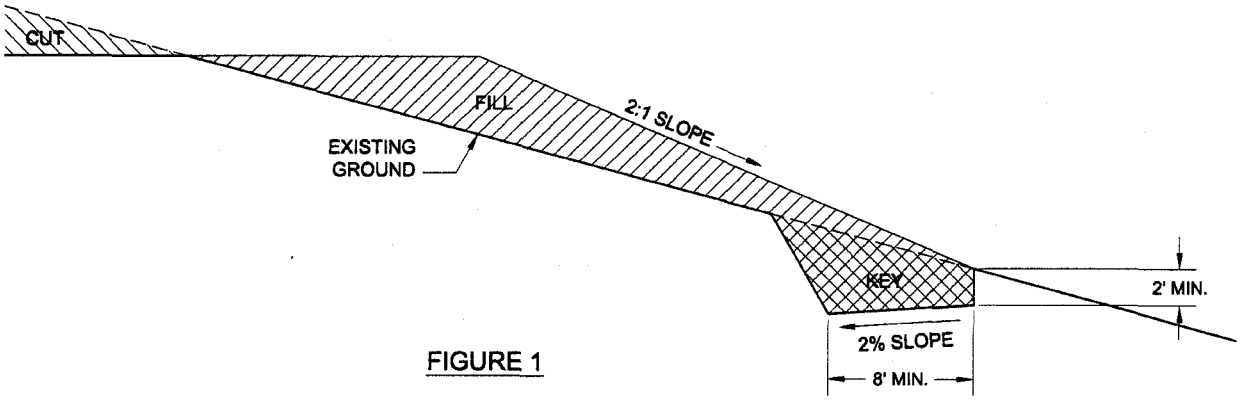

FIGURE 1

(x) "Land Disturbance" - Clearing, excavating, grading, or other manipulation of the natural terrain.

(y) "Low Impact Development (LID)" means the stormwater management approach towards development planning and design that minimizes post-construction stormwater runoff pollutant loads and stormwater runoff quantity, by promoting infiltration and biofiltration, and minimizing the installation of impervious surfaces. The LID design orientation is to minimize the site stormwater runoff impact of development by using design techniques that infiltrate, filter, store, evaporate, and detain runoff close to its source.

(z) "Notice of Intent" - The formal filing to the California State Regional Water Quality Control Board (RWQCB) for coverage under the NPDES General Construction Permit for Discharges of Storm Water Associated with Construction Activity

(aa) "NPDES" – National Pollution Discharge Elimination System is a program, federally authorized by the Clean Water Act, which is aimed at reducing and eliminating pollution sources from entering into natural streams and bodies of water.

(bb) "Owner" - The person or persons shown in the County Recorder's Office as owner of property.

(cc) "Permittee" - The owner, contractor, or any person undertaking land disturbance activities upon a site pursuant to a permit granted by the City.

(dd) "RWQCB – Regional Water Quality Control Board" - State regulatory agencies responsible for runoff water quality and the City of Salinas NPDES program.

(ee) "Riparian and Wetland Resources" - Riparian and wetland resources are generally those areas which fall into one of the following categories:

(i) An area extending 100 feet (measured horizontally) from each side of a perennial stream. Distance shall be measured from the 100-year flood high water mark.

(ii) An area extending 100 feet (measured horizontally) from each side of an intermittent stream. Distance shall be measured from the 100-year flood high water mark.

(iii) An area extending 100 feet from the 100-year flood high water mark of a marsh or a natural body of standing water.

(ff) "Road Gradient (%)" - Vertical rise or distance multiplied by 100 and divided by horizontal run or distance.

(gg) "Runoff" - The movement of surface water over land or improved surfaces such as, but not limited to, streets, parking lots, driveways or sidewalks.

(hh) "Sediment" - Eroded earth material that is carried by water, wind, gravity or ice and deposited into channels, lakes, rivers or other areas.

(ii) "Sediment Control and Debris Facility" - A storm water treatment device facility such as a drainage detention basin, which serves the purpose of collecting water-borne sediment and debris, and is designed to be cleaned periodically.

(jj) "Sediment Control Measures" - Project design features intended to halt or reduce the movement or transport of soil sediments by storm water runoff or drainage flow.

(kk) "Site" - A parcel of land or contiguous parcels where land disturbance including erosion control, clearing, grading, or construction are performed or proposed.

(ll) "Slope" - An inclined ground surface the inclination of which is expressed as a ratio of horizontal distance to vertical distance.

(mm) "Soil" - Naturally occurring mineral and organic earth materials on the immediate surface overlying bedrock or parent material.

(nn) "Soils Engineer" - A Civil Engineer licensed in California who is experienced in soil mechanics and slope stability analysis.

(oo) "Storm Water" - Drainage that has originated as rainfall, which then flows over land.

(pp) "Storm Water Pollution Prevention Plan (SWPPP)" – Implementation plan showing how the quality of storm water runoff will be protected. Required for those projects under the General Permit for Discharges of Storm Water Associated with Construction Activity and as required by the City Engineer. The plan generally a site map and specifically identifies the activities that have the potential to pollute storm water which could enter creeks or other natural drainage channels or the City's storm water drainage system, and describes the pollution prevention measures including Best Management Practices that will be implemented at the site.

(qq) "Stream" - Any watercourse as designated by a solid line or dash and three dots symbol shown on the largest scale of United States Geological Survey map most recently published.

(rr) "SWRCB" – State Water Resources Control Board – State agency to which the Regional Water Quality Control Boards report.

(ss) "10-Year Storm" - A storm with such intensity and duration that its magnitude would only be exceeded on the average once every ten years, or that has a 10% chance of occurrence in any given year.

(tt) "100-year Storm" - A storm with such intensity and duration that its magnitude would only be exceeded on the average once every 100 years, or that has a 1% chance of occurrence in any given year.

(uu) "Terrace" - A relatively level step constructed in the face of a graded slope surface for drainage and maintenance purposes.

(vv) "Topsoil" - Loose, friable, organic, and fertile earth materials on top of a soil profile usually the A - horizon.

(ww) "Waste Discharge Identification (WDID) Number" – Permit number issued by SWRCB for coverage under the General Construction Storm Water Permit.

(xx) "Waterbreak" - A ditch, dike, dip, or combination thereof, constructed to effectively divert water as an aid to erosion control.

SECTION 3. GENERAL PROVISIONS.

(a) No person shall cause or allow the persistence of a condition on any site that could cause accelerated erosion. Accelerated erosion shall be controlled and/or prevented by Permitee or the property owner by using measures outlined in subsequent sections as applicable, especially when work is on geologically unstable areas, on slopes above 20%, and/or on soils rated a severe erosion hazard. Additional measures may be necessary and may be specifically required by the City Engineer.

(b) No person shall do or permit to be done any grading which may obstruct, impede or interfere with the natural flow of storm water, whether such waters are unconfined upon the surface of the land or confined within land depressions or natural drainage ways, unimproved channels or watercourses, or improved ditches, channels or conduits, in such manner as to cause flooding where it would not otherwise occur, aggravate any existing flooding condition or cause accelerated erosion.

(c) The property owner and the person(s) doing or causing or directing the grading are responsible for the prevention of damage to any other property, public health and safety. No person shall grade, fill, or excavate on any land so as to endanger any public street, sidewalk, alley, or any other public or private property, or public health and safety without supporting and protecting such property and persons from damage.

(d) The property owner and the person(s) doing or causing or directing the grading are responsible for protecting down-stream areas on or near the site, such as creeks, streams, wetlands, lakes, springs, trees, and riparian habitat that could be affected by the grading. The grading shall be conducted in a manner that prevents environmental damage and is consistent with the current versions of the City of Salinas Standard Specifications, Design Standards and Standard Plans; the City of Salinas Storm Water Development Standards, as the same may be amended from time to time, and the requirements contain herein.

(e) The property owner and the person(s) doing or causing or directing the grading shall put into effect and maintain all Best Management Practices necessary to protect adjacent watercourses and public or private property from damage by erosion, flooding or deposition of mud or debris originating from the site. Precautionary measures must include provisions for properly designed erosion and sediment control measures, so that downstream properties are not affected by upstream erosion or sediment transport by storm water. If, in the opinion of the City Engineer, grading activities result in a need for post-construction runoff control measures, then such measures, (including Low Impact Development devices/systems), will be required to be installed, as specified in the City of Salinas Storm Water Development Standards.

(f) All construction projects that cause land disturbance of one or more acres, or that disturb less than one (1) acre but are part of a larger common plan of development that in total disturbs one (1) or more acres, must meet the applicable requirements of the State of California General Storm Water Permit for Discharges from Construction Activities and the City's NPDES

permit. Applicants for grading permits shall submit a copy of the Notice of Intent (NOI) for application for coverage under the State Water Resources Control Board (SWRCB) General Construction Storm Water Permit, and the Waste Discharge Identification Number (WDID) issued by the SWRCB. A Storm Water Pollution Plan that meets the requirements of the State General Storm Water Permit shall be submitted to the City for approval for all construction projects required to obtain coverage. A grading permit shall not be issued without the NOI and WDID issued by the SWRCB and the approved SWPPP.

(g) The following minimum requirements apply to all construction projects that require coverage under the State General Construction Storm Water Permit:

(i) Sediments generated at the project site shall be controlled using adequate source control and/or structural BMPs.

(ii) Construction-related materials and wastes shall be retained at the project and properly disposed of to avoid discharge to the City storm drain system and waters of the state.

(iii) Unauthorized non-storm water runoff shall be contained at the project site. Authorized non-storm water discharges shall be as defined in the State General Construction Storm Water Permit.

(iv) Erosion from slopes and channels shall be controlled by implementing an effective combination of erosion control (source control) and other BMPs as described in the City of Salinas Standard Specifications, Design Standards, and Standard Plans document, as the same may be amended from time to time, City of Salinas Storm Water Development Standards, and/or equivalent approved manuals that may be identified by the City.

(h) All construction projects shall implement the following BMPs, unless justification is provided and approved by the City in the SWPPP as to why it is not practicable.

(i) Stabilized construction entrance;

(ii) Scheduling of grading activities to minimize bare graded areas during the rainy season;

(iii) Downslope sediment controls (e.g., sediment logs or equivalent);

(iv) Concrete truck washouts;

(v) Storm drain inlet protection;

(vi) Protection of slopes and channels;

(vii) Good housekeeping practices (e.g., trash management, proper material storage, and similar practices); and,

(viii) Additional BMPs as may be designated by the City Engineer prior to issuance of the grading permit due to site conditions.

SECTION 4. HAZARDOUS CONDITIONS. Whenever the City Engineer determines that an existing excavation or embankment or cut or fill has become a hazard to life or limb, or endangers property, or adversely effects the safety, use, or stability of a public way or drainage channel or causes significant impact on the natural resources of the area, the owner of the property upon which the excavation, embankment, cut, or fill, is located, or other person or agent in control of said property, upon receipt of notice in writing from the City Engineer shall, within the period specified therein, repair or eliminate such hazard and be in conformance with the requirements of these standards. Long-lived soil sterilants shall not be used on soils or slopes which may need subsequent revegetation for erosion and sediment control. Where feasible, erosion and soil sterility problems shall be corrected no later than the beginning of the next rainy season (approximately October 15).

SECTION 5. PERMIT APPLICATION AND REQUIREMENTS.

(a) General - Except as exempted in Section 6 of these standards, a permit shall be obtained from the City by the owner(s) of the property (or agent when authorized in writing) for each site. Approval of a permit for a new development shall require the abatement of any existing human-induced or accelerated erosion problems on the property. Approval of the permit for construction sites of one acre or more is also dependent on verification that a NOI for coverage under the State General Storm Water Construction Permit has been submitted and a WDID issued.

(b) Plans and Specifications - Two sets of plans, plus supporting data, shall be required for each application when required by the City Engineer. Plans shall be drawn to scale upon substantial material, minimum size 19" x 24", and shall be of sufficient clarity to indicate the nature and extent of the work proposed and show in detail that it will conform to the provisions of these standards and all relevant laws and regulations. The first sheet of each set of plans shall include the location and Assessor's Parcel Number(s) of work, the name, telephone number, and address of the owner(s), and the name, telephone number, and address of person by whom they were prepared. The plans shall include the following information in writing, diagrams, and/or scale drawings:

(i) Statements as to the specific intention or ultimate purpose for which the grading is being done.

(ii) General location and vicinity of the proposed site.

(iii) Property lines and accurate contours of the existing ground and details of terrain and area drainage without existing vegetation. Contour intervals shall be one (1) foot when the natural ground slope is less than 5%; two (2) feet when 5 to 10%; and five (5) feet when slope is more than 10%. Contours shall overlap fifteen (15) feet onto adjacent properties.

(iv) Limiting dimensions, elevations or finished contours to be achieved by the grading and proposed drainage channels and related construction, including proposed vegetation, landscaping, finished grade contours will be shown as they relate to surrounding property contours.

(iv) A comparison of runoff with project and without project may be required at the discretion of the City Engineer.

(v) Detailed plans and location of all temporary and permanent structural and non-structural erosion and sediment control measures, and of all surface and subsurface drainage devices, walls, cribbing, dams, sediment basins, storage reservoirs, and other protective devices to be constructed with, or as a part of, the proposed work, together with a map showing the drainage area with the complete drainage network and the estimated runoff of the area served by any drains. The location of any known erosion, flooding or inadequate capacity and condition of drainage courses and flood plains in the pathway of offsite runoff or drainage shall be noted on the plans and/or maps.

(vi) The planned direction and disposition of all storm drainage flow (with approximate grade) from all buildings, yards, lots, driveways, parking areas, and streets.

(vii) Vegetative erosion control and re-vegetation measures for all surfaces exposed or expected to be exposed during grading activities.

(viii) Locations of buildings or structures on the property where the work is to performed and the approximate location of buildings or structures on adjacent lands owned by other owners which is within fifteen (15) feet of the property line, or which may be affected by the proposed operations.

(ix) A statement of the approximate quantity of excavation and fill, along with the appropriate shrinkage factor.

(x) Specifications, when required, shall contain information covering construction and material requirements.

(xi) Estimated starting and completion dates.

(xii) Extent and manner of tree cutting and/or vegetative clearing including a disposal plan.

(xiii) A provision for stockpiling topsoil when necessary for erosion control or landscaping.

(xiv) North Arrow, written and graphic scales.

(c) Storm Water Pollution Prevention Plan (SWPPP) – Shall be submitted for construction sites of one acre or larger. At a minimum, the SWPPP shall address:

(i) A vicinity map showing nearby roadways, the construction site perimeter, and the geographic features and general topography surrounding the site.

(ii) A site map showing the construction project in detail, including the existing and planned paved areas and buildings; general topography both before and after construction; drainage patterns across the project area; and anticipated storm water discharge locations (i.e., the receiving water, a conduit to the receiving water, and/or drain inlets).

(iii) A detailed, site-specific listing of the potential sources of storm water pollution.

(iv) A description of the type and location of erosion and sediment control BMPs to be employed at the site.

(v) The name and telephone number of the qualified person responsible for implementing the SWPPP.

(vi) Certification/signature by the landowner or an authorized representative.

(d) Engineering Requirement - A Civil Engineer licensed by State of California shall prepare and sign the plans and specifications and be coordinator and liaison between other professionals, owners, contractors and the City Engineer if:

(i) Grading is in excess of 2,000 cubic yards (excludes clearing and stripping).

(ii) Major use permits and/or any other projects likely to cause major land disturbances as determined by the City Engineer.

(e) Engineering Reports. When required by the City Engineer, each application for a permit shall be accompanied by two (2) sets of supporting data consisting of a soil and/or Civil Engineering report and/or Engineering Geology report, and/or any other reports deemed necessary by the City Engineer.

(i) The soils engineering report shall include data regarding feasibility of the site for the proposed uses; recommendations for grading, including site preparation and placement of fill; nature, distribution, erosion hazards and strength of existing surface and subsurface soils; foundation recommendations; finished slope stability; design of buttress fills; recommendations for mitigation of seismic forces; surface and subsurface drainage; and soil description, as defined in the USDA Soil Survey of Monterey County, including soil types, depth, erodibility, and vegetative establishment and growing capabilities.

(ii) The civil engineering report shall include hydrological calculations of runoff for 10-year and 100-year storm frequencies when required by the current City of

Salinas Standard Specifications, Design Standards and Standard Plans document; City of Salinas Storm Water Development Standards, and Section12 of this standards specification; conclusions and recommendations for adequate erosion control and grading procedures, comparison of runoff without and within the project; design criteria for corrective measures, including the existing and/or required safe storm drainage capacity of channels onsite and measures used to minimize impervious surface runoff; and opinions and recommendations covering adequacy of site to be developed by the proposed grading.

(iii) The engineering geology report shall include an adequate description of the geology of the site, potential geologic hazard and conclusions and recommendations regarding the effects of geologic conditions on the proposed development plus opinions and recommendations covering the adequacy and stability of the geologic subsurface for cuts and fill loads to be developed by the proposed grading.

(iv) Recommendations included in the reports when approved by the City Engineer shall be incorporated in the plans and specifications.

(f) Variances - A request for variance from the provisions of these standards, the permit conditions, or the plan specifications may be approved, conditionally approved, or denied by the City Engineer. A request for a variance must state in writing the provision to be varied, the proposed substitute provision, when it would apply and its advantages.

(g) Work Time Limits - The permittee shall fully perform and complete all the work required to be done within the time limits specified. If no time limit is specified, the permittee shall complete the work within 180 calendar days after the date of the issuance of the permit. If work has not started within 180 calendar days after the permit is issued, it expires.

If work authorized is started and suspended or abandoned for 180 calendar days, the permit also expires unless stoppage has been authorized in advance by the City Engineer.

If the permittee is unable to complete the work within the specified time he shall, prior to the expiration of the permit, present in writing a request for an extension of time, setting forth the reasons for the requested extension. If, in the opinion of the City Engineer, an extension is warranted, additional time may be granted for the completion of the work.

SECTION 6. PERMIT EXEMPTIONS. Excavation, grading, filling, clearing, and/or erosion control work requires a permit from the City except in the following:

(a) Subdivisions and Planned Unit Developments - When improvement plans complying with these standards have been approved.

(b) Building Pads and Driveways - Grading, when done with a valid building permit.

(c) Emergency Work - Work necessary to preserve life or property, provided, however, that when emergency work is performed under this section, the person performing it shall report

the pertinent facts relating to the work to the City Engineer within ten (10) days after commencement of the work. Thereafter the person shall obtain a permit pursuant to Section 29B-6 and perform such work as may be determined by the City Engineer to be reasonably necessary to correct any erosion or conditions with a potential to cause erosion as a result of the emergency work.

(d) Excavations - An excavation which does not exceed fifty (50) cubic yards and which is either less than two (2) feet in depth or which does not create a cut slope greater than five (5) feet in height and steeper than two (2) horizontal to one (1) vertical.

(e) Fill - A fill, except when in a riparian zone, containing permitted materials only which is less than two (2) feet in depth, is placed on natural terrain with a slope flatter than five (5) horizontal to one (1) vertical, does not exceed fifty (50) cubic yards on any site, does not alter or obstruct a drainage course, and will not be used for structural support.

(f) Basements and Footings - An excavation below finished grade for basements and footings of a building, retaining wall or other structure authorized by a valid building permit. This shall not exempt any fill except as provided under subsection (e) of this section, made with the material from such excavation nor exempt any excavation having an unsupported height greater than five (5) feet after the completion of such structures.

(g) Refuse Disposal - Refuse disposal Bins which are permitted and actually being controlled pursuant to other City regulations, and excavations for individual and community sewage disposal systems made pursuant to other City permits.

(h) Wells and Utilities - Excavations for wells or utilities made pursuant to other City permits.

(i) Soil and/or Geological investigation - Exploratory excavations and/or test borings under the direction of either a soils Engineer or Engineering geologist where such excavation is to be returned to the original condition under the direction of such Engineer or geologist within 45 days after the start of work.

(j) Agricultural Work - Use of land operated under a conservation plan by a resource conservation district. Routine plowing, harrowing, discing, listing, leveling, and similar operations necessary to prepare a field for a crop. Not exempted shall be initial grading to convert land from non-productive to crop producing use.

(k) Public Work - Work in connection with public improvement projects for which inspection is provided by the City or other public agency and which complies with these standards.

SECTION 7. FEES.

Fees, if any, necessary to implement this standards specification shall be as set forth per Section 11B-4 of the Salinas City Code.

SECTION 8. SURETIES

(a) If grading is in excess of 2,000 cubic yards, the permittee shall provide a cash deposit, bond or equivalent surety, to the satisfaction of the City, payable to the City to insure compliance with the provisions of the permit and this standards specification. If deemed necessary by the City Engineer, a surety may be required for grading operations of less than 2,000 cubic yards.

(b) Permits for grading shall not be valid and work shall not be started until the required sureties have been provided. Surety shall remain in effect one full winter cycle from October 15 through April 15, after final inspection and approval.

(c)All expenditures by the City for corrective work necessary because of the permittee's failure to comply with the provisions of the permit and this standards specification shall be charged against the surety.

(d) The amount of surety for grading shall be based on the number of cubic yards of material either excavation or fill, whichever is larger, plus the cost of drainage, erosion control and/or other protective devices.

SECTION 9. DESIGN STANDARDS AND EXCAVATIONS.

(a) General -Unless otherwise recommended in the soil engineering and/or engineering geology reports approved by the City Engineer, cuts and excavations shall conform to the provisions of this Section.

(b) Slope - The slope of cut surfaces shall be no steeper than is safe for the intended use. Cut slopes shall be no steeper than two (2) horizontal to one (1) vertical, and shall not exceed twenty (20) feet in vertical height or exceed seventy-five (75) feet slope distance without a bench or terrace break. Due to individual site soils and geology, flatter and shorter slope lengths may be required, or steeper and longer slope lengths may be allowed when reviewed and found by the City Engineer to be consistent with building and safety. Cut slopes greater than three (3) horizontal to one (1) vertical shall only be permitted when installed with sufficient erosion control measures. Cut slopes shall be rounded off so as to blend in with natural terrain (see Figure 2).

ROAD CUTS & FILLS

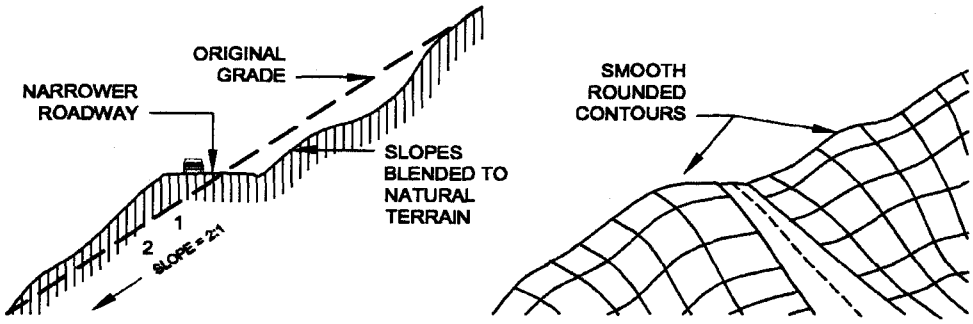

DEVELOPMENT CUTS & FILLS

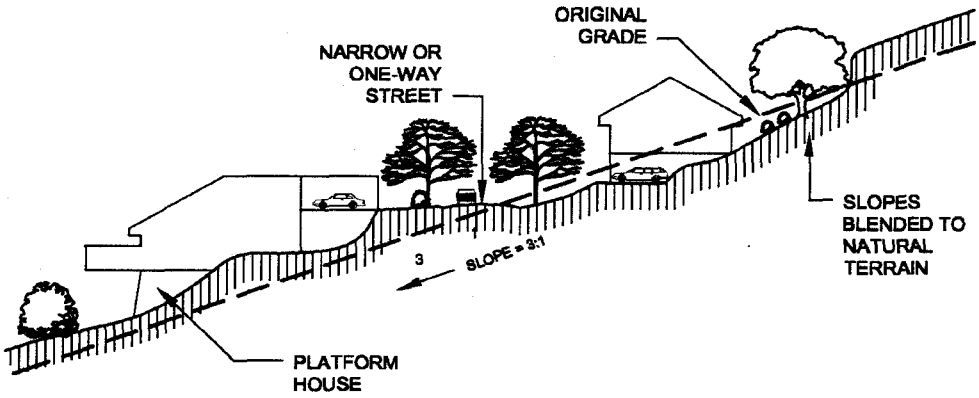

MAX. HEIGHTS AND LENGTHS OF CUT & FILL SLOPES

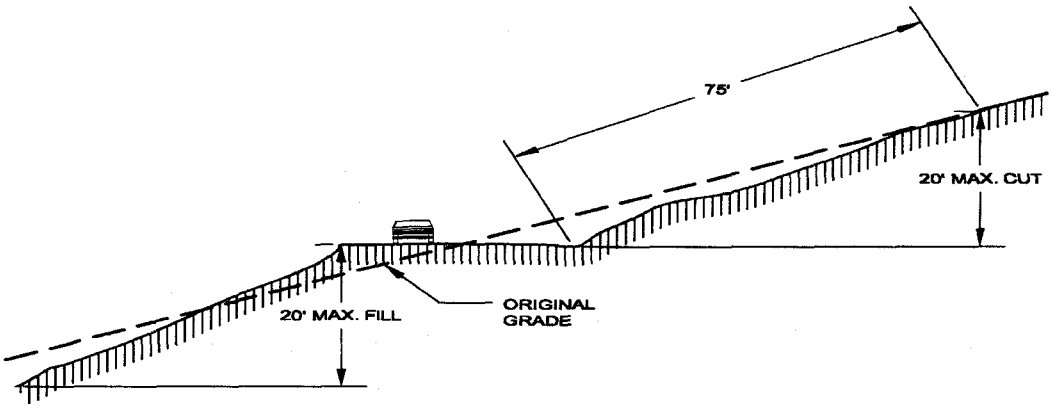

FIGURE 2

(c) Stockpiles - Stockpile material for trenches and pits will be put up slope, when possible, of the excavation to be promptly backfilled and compacted into trenches and pits. Excavated material not needed at the site will be removed or disposed of at a location and/or manner approved by the City Engineer.

(d) Vegetative Protection - All earth cuts shall be planted or otherwise protected from the storm runoff erosion within thirty (30) days of the completion of final erosion control and grading work. Planting shall be irrigated to establish a root system before the rainy season, if necessary in the opinion of the City Engineer.

SECTION 10. DESIGN STANDARDS FOR FILL.

(a) General - Unless otherwise recommended in the soil engineering and/or engineering geology reports approved by the City Engineer, fill shall conform to the provisions of this section.

(b) Fill Location - Fill shall not be constructed on natural slopes steeper than two (2) to one (1) unless an Engineer devises a method of placement which will ensure the fill will remain in place. Cut slopes greater than three (3) horizontal to one (1) vertical shall only be permitted when installed with sufficient erosion control measures. The toe of the fill shall be no closer than twelve (12) feet horizontally to the top of existing or planned cut slopes. The area beyond the toe of the fill shall be sloped for sheet overflow or a drain shall be provided. (See Figure 3).

(c) Fill Slopes -The slope of fill surfaces can be no steeper than is safe for the intended use. Fill slopes shall be no steeper than two (2) to one (1) and shall not exceed twenty (20) feet vertical height or seventy-five (75) feet slope distance without a terrace break. Due to individual soil properties, shorter and flatter slopes may be required or steeper and longer slopes may be

allowed upon review by the City Engineer if he finds the deviations consistent with stability and safety. Tops of fill slopes shall be rounded off so as to blend with the natural terrain (See Figure 2).

(d) Ground Preparation - Natural ground surface over which fills are planned shall first be cleaned of all trash, vegetation, stumps, debris, non-complying fill, top soil and other unsuitable materials and shall be scarified prior to the placement of the fill. Where slopes are 3:1 three (3) to one (1) or steeper and/or twenty (20) feet or more in height, an 8-foot wide (minimum) key shall be dug into undisturbed, solid competent soil or bedrock beneath the toe of the proposed fill. On minor fills, a key of less than eight (8) feet may be approved by the City Engineer. The key must be cut and approved as a suitable foundation for fill before placing any fill. (See Figure 1 and 3).

(e) Materials Permitted - Only approved material free from tree stumps, detrimental amounts of organic matter, trash, garbage, sod, peat and/or similar materials shall be used. Rocks, asphalt concrete and/or broken concrete larger than six (6) inches in greatest dimension shall not be used unless the method of placement with appropriate technical analysis/justification is approved by the City Engineer. Topsoil may be used in the top 12-inch surface layer to aid in planting and landscaping.

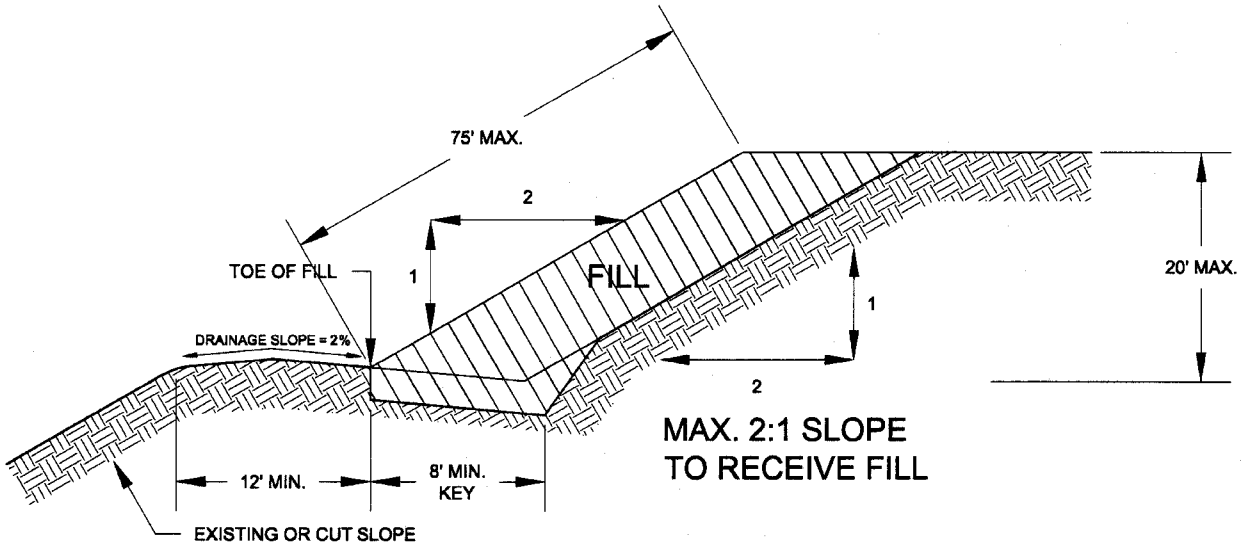

FIGURE 3

(f) Compaction of Fill - All fills shall be compacted to a minimum relative dry density of 90 percent as determined by ASTM D-1557-78 or CALTRANS test method under California 216. Field density verification must be submitted for any fill twelve (12) inches or more in depth

where such fill may support the foundation for a structure. A higher relative dry density and/or additional compaction tests may be required at any time by the City Engineer.

(g) Vegetative Protection - All earth fill shall be planted or otherwise protected from the effects of storm runoff within thirty (30) days of the completion of final grading and planting shall be irrigated to establish a root system, if necessary in the opinion of the City Engineer.

SECTION 11 DESIGN STANDARDS FOR CUT AND FILL SETBACKS.

(a) General - Unless otherwise recommended in the approved soil engineering and/or engineering geology reports and shown on the approved grading plan, setbacks shall conform to this section and be no less than as shown in Figure 4.

(b) Minimum Setbacks (Figure 4) - Tops and toes of cut and filled slopes shall be set back from property boundaries and structures as far as necessary for the safety of the adjacent properties and to prevent damage resulting from water runoff, by flooding, erosion of the slopes, or by sediment deposition.

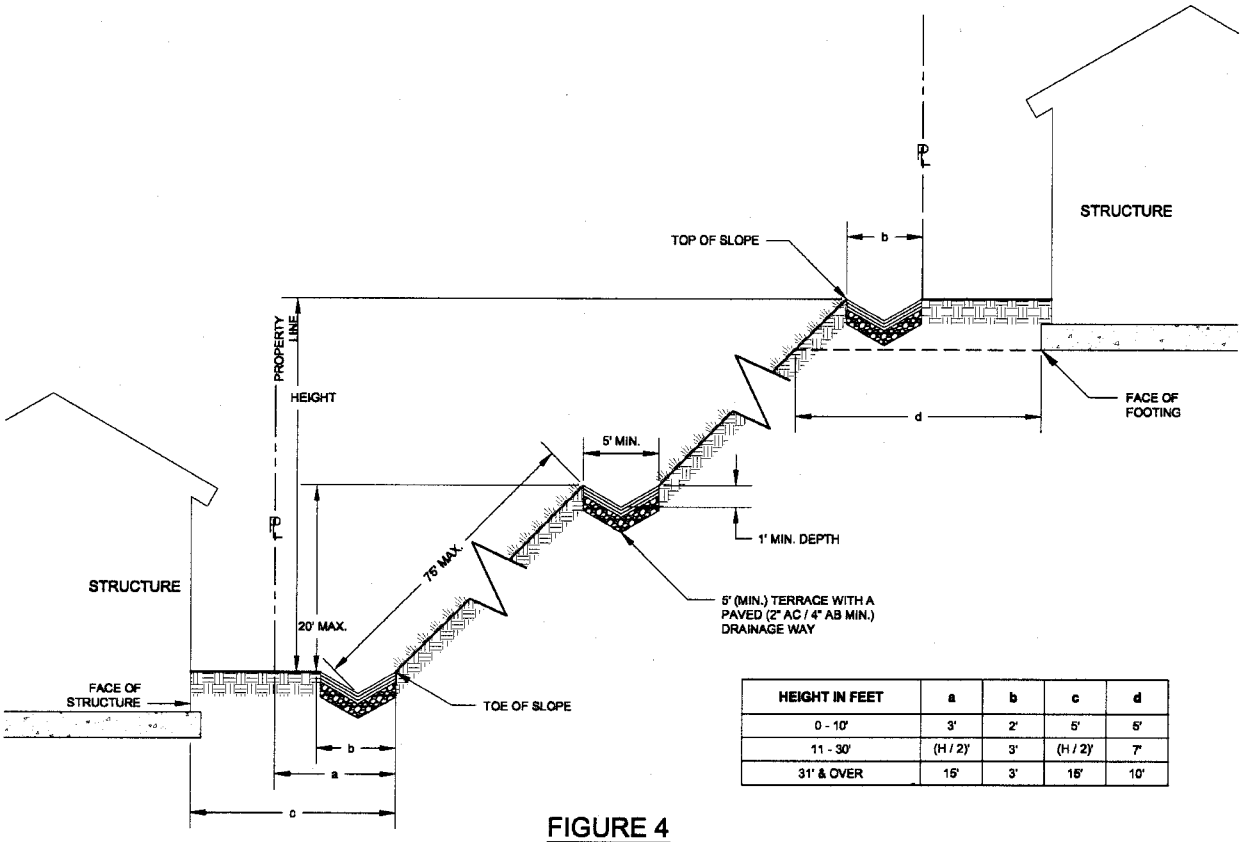

HEIGHT IN FEET	a	b	c	d
0 - 10'	3'	2'	5'	5'
11 - 30'	(H / 2)'	3'	(H / 2)'	7'
31' & OVER	15'	3'	15'	10'

FIGURE 4

(c) Stream and Riparian Setbacks - Tops and toes of cut and/or filled slopes shall be set back, as designated and defined in the City's General Plan to provide and maintain an

undisturbed protective strip between the grading and the riparian corridor. This strip shall have sufficient filter capacity to prevent degradation of water quality as determined by a biologist approved by the City Engineer. If it is determined that the filter capacity of the protective strip is insufficient, additional erosion control may be required by increasing the width of the protective strip or with structural measures and/or by seeding, planting, mulching of bare soil areas.

(d) Retaining Walls - Retaining walls when keyed into stable foundations and capable of sustaining the design loads, may be used to reduce the required cut and fill setbacks when recommended by the Civil or Soil Engineers and approved by the City Engineer.

(e) Restrictions and/or minimums may be increased or relaxed upon review by the City Engineer if he finds the deviations consistent with safety and stability and to provide access for slope maintenance and drainageways.

SECTION 12. DESIGN STANDARDS FOR DRAINAGE AND TERRACES.

(a) General.

(i) Site design will incorporate measures for reducing runoff and water quality impacts in compliance with the current City of Salinas NPDES storm water permit and current City design standards. Drainage facilities and terraces shall conform to these provisions. To the extent practicable, and as required by the City of Salinas Standard Specifications, Design Standards, and Standard Plans document, and the City's Storm Water Development Standards; peak storm drainage runoff and sediment rates may not exceed predevelopment rates. A pro-rata share of the cost of off-site erosion sediment, and flood control improvements and/or for maintenance to the principal drainageway may be required by the City Engineer to handle the increased peak runoff and/or sediment generated by the development if greater than predevelopment rates.

(ii) All drainage facilities shall be designed to carry surface and subsurface waters to a street, storm drain or watercourse, while minimizing the amount of said discharge. Adequate provisions shall be made to avoid damage to adjacent and downstream properties. All areas shall be graded and drained so that water will not pond or accumulate.

(iii) Drainage shall not cause downstream storm water quality degradation, erosion or endanger the stability of any cut or fill slope or any building or structure. If surface drainage is discharged onto any adjoining property, it shall be discharged in such a manner that it will not cause erosion or endanger any cut or fill slope or any building or structure.

(b) Runoff Calculations - Plans and specifications prepared for subdivisions of five (5) acres or more, or as required by the current City of Salinas Standard Specifications, Design Standards and Standard Plans document; and the City's Storm Water Development Standards , shall show, by table and/or calculations, the peak rates of storm runoff both before and after

development for the 10-year and 100-year storms. Runoff calculations shall be performed according to the requirements of said standards. A combination of storage and controlled release of storm water runoff may be required by the City Engineer.

(c) Drainage Facilities.

(i) Natural drainage ways shall not be disturbed and existing drainage courses shall not be obstructed or obliterated without mitigating measures installed that have been approved by the City Engineer. Grading equipment shall not disturb and/or cross a flowing stream unless absolutely necessary and only with prior approval from the City Engineer.

(ii) Whenever a grading operation obstructs or impairs the flow of runoff in an existing drainage course, a culvert, bridge or other suitable drainage facility designed and acceptable to the City Engineer shall be installed to convey the flow past the point of impairment. No construction materials or construction by-products shall be discarded in any drainageway or riparian zone.

(iii) Where needed, drainage channels shall be culverts, pipe drains, paved, rock, or vegetative channels designed to safely carry existing and potential off-site runoff from a fully developed area upstream as well as local on-site surface and subsurface waters to an adequate drainage course designated for such purposes by the City Engineer. Properly designed energy dissipaters may be required at the point of discharge.

(iv) Culvert size and industry standard materials shall be used in accordance with City standard design criteria and as approved by the City Engineer. Minimum diameter shall be fifteen (15) inches.

(v) Cuts, fills, and retaining walls shall have subsurface drainage facilities as necessary for stability.

(vi) Berms, ditches, interceptor drains, or swales, may be constructed at the top of cut and fill slopes when necessary for protection against water runoff. When required by the City Engineer, minimum size interceptor drains above cut slopes with a tributary drainage path greater than forty (40) feet measured horizontally or an area larger than 1/3 acre shall be constructed of an approved impervious non- erodible material a minimum of three (3) inches thick, one (1) foot deep, three (3) feet wide and discharge into downdrains. Asphalt ditches will not be allowed. Energy dissipaters may also be required by the City Engineer.

(vii) At least a one percent (1%) grade will be required toward an improved storm drainage facility, either existing or planned, from all building sites, pads, yards, roof drains, driveways, etc.

(viii) Measures to control storm water runoff at the source shall be included in the grading plan design.

(d) Terraces.

(i) Terraces at least six (6) feet in width shall be established at not more than 20-foot vertical intervals or 75-foot slope intervals. Suitable access shall be provided to permit proper grading and maintenance of these terraces. Where only one terrace is required, it shall be at mid-height (see Figure 4).

(ii) Swales or interceptor drains, ditches, on terraces and on the top of cut slopes, shall be designed to carry water and sediment to safe disposal structures and areas and shall have a minimum appropriate gradient and must be protected with an approved non-erodible material a minimum of 3 inches thick, 1 foot deep, and 5 feet wide. A maintenance plan may be required by the City Engineer.

SECTION 13. DESIGN STANDARDS FOR EROSION AND SEDIMENT CONTROL.

(a) General. The following shall apply to the control of erosion and sediment from grading operations:

(i) Grading plans shall be designed with long-term erosion and sediment control as a primary consideration.

(ii) No grading operations shall be conducted during the rainy season (October 15th – April 15th) except upon a clear demonstration, to the satisfaction of the City Engineer, that adequate site erosion control measures are to be taken to minimize risk of increased erosion and sediment discharge from the site.

(iii) Should grading be permitted during the rainy season, the smallest practicable area of erodible land shall be exposed at any one time during grading operations and the time of exposure shall be minimized.

(iv) Natural features, including vegetation, terrain, watercourses and similar resources shall be preserved wherever possible. Limits of grading shall be clearly defined and marked to prevent damage by construction equipment.

(iv) Permanent vegetation and structures for erosion and sediment control shall be installed prior to October 15th.

(vi) Adequate provision shall be made for long-term maintenance of permanent erosion and sediment control structures and vegetation.

(vii) No topsoil shall be removed from the site unless otherwise directed or approved by the City Engineer. Topsoil overburden shall be stockpiled and redistributed within the graded area after rough grading to provide a suitable base for seeding and planting. Runoff from the stockpiled area shall be controlled to prevent erosion and resultant sedimentation of receiving water.

(viii) Runoff shall not be discharged from the site in quantities or at velocities substantially above those which occurred before grading except into drainage facilities whose design has been specifically approved by the City Engineer.

(ix) Permitee shall implement BMPs to ensure that vehicles do not track or spill earth materials into public streets and shall immediately remove such materials if this occurs.

(x) Should increased erosion and sediment discharge occur or become imminent, permittee shall take all necessary steps to control such discharge. Such steps may include construction of additional facilities or removal or alteration of facilities required by approved erosion and sediment control plans. Facilities removed or altered shall be restored as soon as possible afterward or appropriate changes in the plan shall be immediately implemented pursuant to this standards specification. Permittee shall take prompt action to resolve emergency problems.

(xi) If the project is abandoned after vegetation removal has taken place, the area shall be stabilized and planted as required herein. If the work is suspended for an extended period, the City Engineer may require interim planting as needed to control erosion and sediment transport.

(b) Erosion and Sediment Control Plans: Erosion and sediment control plans shall comply with the following requirements. For construction projects of one acre or more that must submit a SWPPP, the Erosion and Sediment Control Plan shall be incorporated as part of the SWPPP.

(i) The erosion and sediment control plans shall provide the location and description of all planned temporary and permanent erosion and sediment control measures, design and application standards specifications, and maintenance schedule.

(ii) Erosion and sediment control plans shall be designed to prevent increased discharge of sediment at all stages of grading and development from initial disturbance of the ground to project completion. Every feasible effort shall be made to ensure that site stabilization is permanent. If grading occurs in distinct phases or the site will remain unstable through more than one rainy season, more than one set of plans may be required as determined by the City Engineer. Plans shall indicate the implementation period and the state of construction where applicable.

(iii) The structural and hydraulic adequacy of all storm water containment or conveyance facilities shown on the erosion and sediment control plans shall be verified by a Civil Engineer, who shall so attest on the plans. Sufficient calculations and supporting material to demonstrate such adequacy shall accompany the plans when submitted.

(iv) Erosion and sediment control plans shall include an effective re-vegetation program to stabilize all disturbed areas which will not be otherwise protected.

(v) Erosion and sediment control plans shall be designed with sufficient flexibility to meet unanticipated field conditions.

(vi) Erosion and sediment control plans shall provide for inspection and repair of all erosion and sediment control facilities at the close of each working day during the rainy season and for specific sediment cleanout and vegetation maintenance criteria.

(vii) Erosion and sediment control plans shall comply with the recommendations for BMPs as described in the City of Salinas Stormwater Development Standards and the City's Standard Specifications, Design Standards and Standards Plans document), as the same may be amended from time to time, City of Salinas Storm Water Development Standards, and/or equivalent approved manuals that may be identified by the City and any civil engineer, geotechnical engineer, engineering geologist, or landscape architect involved in preparation of the grading plans.

(viii) The City Engineer may, in his sole discretion, waive the requirement for an erosion and sediment control plan if, in his opinion no significant erosion or sediment discharge hazard exists. The requirement for a SWPPP for applicable sites (one acre or larger) cannot be waived.

(c) Erosion and Sediment Control Requirements. The following requirements for erosion and sediment control shall apply.

(i) General - Access and building envelopes shall be delineated on the development plans when necessary to keep disturbance out of particularly erodible areas. New lots shall not be created which will require access road and driveways to cross slopes exceeding 20% (5 to 1)for distances greater than fifty (50) feet, unless adequate mitigation measures are provided. Exposed soil shall be protected from erosion by temporary and/or permanent measures, as approved by the City Engineer.

(ii) Slope - Structures on existing slopes exceeding 20% shall utilize pole, step or other such foundation that does not require major land disturbance (See Figure 2).

(iii) Runoff Control - Where concentrated runoff will occur, it will be carried in pipe or culvert conduits or over a non-erodible surface (paved, rocked, or vegetated) with discharge points clearly shown on the development plans. When necessary to prevent erosion, conduits must have proper energy dissipaters at the point of discharge.

(iv) Protection of Down Slopes - Best Management Practices shall be implemented to minimize damage to the face of cuts and fills. Down slopes shall be protected

from surface water runoff from above by dikes, swales or cut-off ditches, or other measures, as needed.

(v) Building Site Runoff - Runoff from buildings, roads, driveways and the total site area shall be controlled by berms, swales, ditches, structures, vegetative filter strips and/or catchbasins to adequately reduce the escape of sediment from the site.

(vi) Sediment and Debris Control Facilities - Temporary and permanent sediment and debris control facilities shall be installed whenever and wherever necessary to protect the project and downstream properties from erosion and sediment/debris discharge.

(vii) Vegetative Removal - Development plans shall indicate the areas where vegetation is to be removed and replaced within the building and access envelopes. Vegetation removal shall be limited to that area necessary and as indicated on the approved development plan. The method and time shall be such that the erosive effects are minimized.

(viii) Vegetative Disposal - Vegetation removed during clearing operations shall be disposed of by chipping, used as mulch, compost, and/or disposed off site in a manner approved by the City Engineer.

(ix) Topsoil - To promote regrowth of vegetation, the topsoil shall be stockpiled and reapplied upon completion of grading on slopes of less than 5:1 (20%). Soil stockpiles and exposed soil shall be protected from erosion at all times. Excess topsoil shall be disposed off site in a manner approved by the City Engineer.

(x) Temporary Vegetation - Temporary vegetation sufficient to stabilize the soil as permanent vegetation cover is maturing shall be established on all disturbed areas as needed and as each stage of grading is completed.

(d) Winter Operations - October 15 to April 15.

(i) Grading projects that are started but not completed by October 15th of each year are to be "winterized" by installation of planned erosion and sediment control measures, which shall be maintained in good repair through the following April 15th, and until the project is completed.

(ii) During the period of October 15th to April 15th, or other dates as determined by the City Engineer, all planned erosion and sediment control measures shall be installed prior to start of grading operations, unless approval for phased control measure installation is requested of and granted by the City Engineer prior to grading or construction permit issuance.

(iii) When work is allowed, existing ground cover shall not be cleared, destroyed, or disturbed more than fifteen (15) days prior to grading or construction work unless approved in advance by the City Engineer.

(iv) When land development work is allowed during the normal, rainy winter season, adequate erosion and sediment control measures must be in place during any land disturbance, and temporary erosion control measures, when needed, must be applied to all soils bared at the end of each day.

(v) During winter, sufficient erosion control materials of straw, plastic, netting, etc., shall be kept on the site at all times to be installed immediately by the permittee upon advent of any rainfall or wind that may be expected to cause erosion and sediment discharge.

(vi) All major cut and fill slopes within the access and building envelope without established vegetation shall be adequately protected between October 15 and April 15 by mulching or other methods approved by the City Engineer.

(vii) All erosion and sediment control measures, including plantings and mulching, shall be closely monitored throughout the winter and runoff problems corrected promptly. Mulching shall be anchored by punching or tacking into the soil or by the use of netting. A minimum of 1000 lbs. of straw, or equivalent, per each 10,000 square feet of slope surface will be required to be anchored. An additional amount may be required by the City Engineer. All erosion and/or slippage of banks shall be repaired by the permittee at his expense.

(viii) Within ten (10) working days after seeding, fertilizing and/or mulching, the permittee will commence watering of the seeded areas or slopes and shall continue until the rains come and/or the ground cover is fully developed and/or self-sufficient. All control measures including berms, diversion catch basins, sediment traps, etc., shall be installed prior to seeding and mulching.

(e) Dust - Dust from grading operations must be controlled. Dust control shall consist of applying water or other dust palliatives, or covering small stockpiles or areas, as necessary to prevent or alleviate dust nuisance generated by construction activities. Periodic street sweeping may also be required by the City Engineer.

(f) Sediment Tracking Control - Sediment shall be prevented or controlled from being tracked off-site by vehicles leaving the construction area using appropriate Best Management Practices such as stabilized construction entrances/exits, stabilized construction roadways, and entrance/exit tire washes.

(g) Erosion and Sediment Control Coordination with Project Installation.

(i) All vegetative and/or structural measures required to safely discharge any runoff generated by the project shall be installed during the first or initial construction phase of the project.

(ii) Land shall be developed in increments of workable size which can be completed in a single construction season. Erosion and sediment control measures shall be coordinated with a sequence of grading, development, and construction operations and all necessary erosion control measures shall be put in effect prior to the commencement of the next work increment and/or winter rainy season.

(iii) Prior to completion and final acceptance of the project, all erosion control measures must be in place and all exposed bare soil shall be mulched, fertilized and otherwise prepared so that it is planted to a permanent vegetative cover. Native or naturalized vegetation should be used. The City Engineer may require watering of planted areas to initiate and assure growth.

(h) Livestock - Where necessary to assure that water quality is not affected by the keeping of livestock, vegetative buffer and/or filter strips shall be established on all downhill sides of areas where livestock are kept. The width of the buffer strip shall be determined by the City Engineer. Also, additional erosion control measures, such as diversion, dissipaters and sediment basins may be required to control runoff from these areas where livestock have destroyed and torn up protective vegetation.

(i) Maintenance - All on-site erosion control facilities shall be properly maintained by the owners for the life of the project so that they do not become nuisances with stagnant water, heavy algae growth, insect breeding, odors, discarded debris, and/or safety hazards. Vegetative maintenance required may include mowing, fertilization, irrigation and/or reseeding.

(j) Storm Drain Inlets' Sediment shall be prevented from entering the storm drainage system by implementing approved storm drain inlet Best Management Practices.

SECTION 14. INSPECTIONS AND COMPLIANCE.

(a) General - Excavation, grading, filling, clearing and erosion and sediment control work requiring a permit shall be subject to inspection by the City Engineer. In lieu of inspection by City staff employees, the City Engineer may require supervision, regular inspection, and special testing be performed, together with a letter of compliance by the licensed professional who prepared the approved plan; or the City Engineer may require supervision inspection, and testing, together with a letter of compliance submitted by an approved independent testing agency.

(b) Inspections Required - The following inspections shall be required:

(i) Periodic ongoing inspection during project progress, including compaction and special testing as may be required by the approved plan.

(ii) Final inspection determining compliance with terms and conditions of these standards and permit.

(c) Compliance with Storm Water Pollution Prevention Plan Requirements for Construction Sites - Periodic inspections shall include inspection for compliance with implementation of storm water pollution prevention Best Management Practices, as required by approved SWPPPs and City ordinances, including the Storm Water Management and Discharge Control Ordinance and the City's NPDES permit. Enforcement of storm water pollution prevention compliance shall be as stated in the Storm Water Discharge and Control Ordinance.

(d) Notification - The permittee shall notify the City Engineer two working days prior to the beginning of the operation authorized by the permit, and one complete working day prior to any inspection or testing requested by the permittee.

(e) Right of Entry - Filing of an application for a permit under these standards constitutes a grant of permission for the City to enter the permit area for the purpose of administering these standards from the date of the application to the termination of the erosion control maintenance period. If necessary, the City Engineer shall be supplied with a key or lock combination, or permitted to install a City lock.