August 23, 2013

Ms. Kristen Kopp
Superintendent Health, Safety, and Environment
Phillips 66 Company
2555 Willow Road
Arroyo Grande, CA 93420
Kristen.M.Kopp@p66.com

Sent via electronic mail only

Dear Ms. Kopp:

HEARING NOTICE AND AVAILABILITY OF DRAFT WASTE DISCHARGE REQUIREMENTS ORDER NO. R3-2013-0028, NATIONAL POLLUTANT DISCHARGE ELIMINATION SYSTEM (NPDES) PERMIT NO. CA0000051 – SANTA MARIA REFINERY, SAN LUIS OBISPO COUNTY, WDID 3 402006002

This letter is to notify you of the availability of Draft Waste Discharge Requirements Order (Order) No. R3-2013-0028, which staff intends to present to the Central Coast Water Board for adoption at its meeting scheduled for December 5, 2013. The Order includes a Monitoring and Reporting Program and Fact Sheet as Attachments E and F. The Tentative Order and associated attachments may be downloaded from our website at:

http://www.waterboards.ca.gov/centralcoast/Permits/Index.htm

Draft Order No. R3-2013-0028 updates NPDES waste discharge requirements (WDRs) for the discharge of waste from the Phillips 66 Company Santa Maria Refinery to the Pacific Ocean. These WDRs are intended to serve as a reissued NPDES permit and will supersede Order No. R3-2007-0002, which remains effective until the Central Coast Water Board adopts a new Order.

The December 5th-6th meetings are scheduled to begin at 8:30 AM and will be held at the following location: (Note that this item may be considered by the Central Coast Water Board at any time during the meeting.)

Central Coast Water Board Office
895 Aerovista Place, Suite 101
San Luis Obispo, CA 93401

Persons wishing to comment on or object to the revised Order must submit comments in writing to the address above no later than **October 4, 2013**. The Central Coast Water Board will not accept late comments or other written submissions on the revised Order unless the Chair rules that exclusion would create a severe hardship and that the late submission will not prejudice any party or the Central Coast Water Board. Any person asking to submit late materials must explain why the materials were not submitted earlier. The Chair will rule on any late submissions at or before the hearing. Late submissions that consist of evidence (as opposed to policy statements or comments) are generally prejudicial unless all designated parties and

Central Coast Water Board staff have time to consider the evidence before the meeting. If Central Coast Water Board staff proposes changes to the revised Order before the Central Coast Water Board meeting, parties and interested persons will have an opportunity to submit written comments on the proposed changes.

A Notice of Public Hearing and instructions are attached. Please post and publish the public notice **no later than September 4, 2013**, according to the instructions provided. If you have questions, please contact **Katie DiSimone at (805) 542-4638** or katie.disimone@waterboards.ca.gov.

Sincerely,

Sheila Soderberg

Digitally signed by Sheila Soderberg
DN: cn=Sheila Soderberg, o=Central Coast Water Board, ou, email=Sheila.Soderberg@waterboards.ca.gov, c=US
Date: 2013.08.21 13:30:24 -07'00'

Michael J. Thomas
Assistant Executive Officer

Attachments:
1. Notice of Public Hearing
2. Public Notice Instructions
3. Draft Waste Discharge Requirements Order No. R3-2013-0028

Jessica Jahr, State Water Board OCC, Jessica.Jahr@waterboards.ca.gov
Katie DiSimone, Central Coast Water Board, kdisimone@waterboards.ca.gov
Dan Connally, PG Environmental, LLC, Dan.Connally@pgenv.com
David Smith, EPA Region IX, Smith.davidw@epa.gov
Jamie Marincola, EPA Region IX, Marincola.JamesPaul@epa.gov
Patrick Sidun, Phillips 66, Patrick.Sidun@p66.com

KTD
s:\npdes\npdes facilities\san luis obispo co\phillips 66\cover letter for proposed order.docx

CALIFORNIA REGIONAL WATER QUALITY CONTROL BOARD
CENTRAL COAST REGION
895 Aerovista Place, Suite 101
San Luis Obispo, California 93401

NOTICE OF PUBLIC HEARING – PUBLIC NOTICE NO. R3-2013-0028

REISSUANCE OF WASTE DISCHARGE REQUIREMENTS ORDER NO. R3-2013-0028
National Pollutant Discharge Elimination System Permit No. CA0000051

FOR PHILLIPS 66 COMPANY SANTA MARIA REFINERY
SAN LUIS OBISPO COUNTY

The California Regional Water Quality Control Board, Central Coast Region (Central Coast Water Board) proposes to authorize discharge of treated wastewater from the Phillips 66 Company Santa Maria Refinery by reissuance of waste discharge requirements. The Santa Maria Refinery Facility provides treatment of process wastewater related to petroleum refining. Treated wastewater is discharged to the Pacific Ocean.

The Central Coast Water Board will hold a public hearing to consider the issuance of the proposed waste discharge requirements on **December 5-6, 2013,** in the:

Central Coast Water Board Office
895 Aerovista Place, Suite 101
San Luis Obispo, CA 93401

Interested persons are invited to submit comments in writing to the Central Coast Water Board at its office in San Luis Obispo no later than **October 4, 2013.** All comments received prior to that date will be considered in the formulation of staff recommendations regarding the waste discharge. The Central Coast Water Board will not accept written comments or other written submittals on the draft Order after **October 4, 2013**, unless the Chair of the Central Coast Water Board rules that exclusion would create a hardship, and that the late submission will not prejudice any party or the Central Coast Water Board. Any person submitting late comments or other submittals must explain why such materials were not submitted by **October 4, 2013**. The Chair of the Central Coast Water Board will rule on late submittals at or before the hearing. Late submittals that consist of evidence (as opposed to policy statements or comments) are generally prejudicial unless all parties and Central Coast Water Board staff have time to consider the evidence before the hearing.

Interested persons are invited to attend the hearing and may make oral comments relevant to the proposed action. Oral comments should summarize written comments. The Chair of the Central Coast Water Board will impose time limits on oral comments.

The Report of Waste Discharge, Fact Sheet, related documents, and all comments received may be inspected and copied at the office of the Central Coast Water Board, 895 Aerovista Place, Suite 101, San Luis Obispo, California 93401-5427, on weekdays between the hours of 8:00 a.m. and 5:00 p.m. Please direct comments and questions to **Katie DiSimone at (805) 542-4638** (or katie.disimone@waterboards.ca.gov) or Sheila Soderberg at (805) 549-3592 at this office. Please bring the foregoing to the attention of any persons known to you who would be interested in this matter.

PUBLIC NOTICE INSTRUCTIONS TO APPLICANT FOR REISSUANCE OF WASTE DISCHARGE REQUIREMENTS

Name of Discharger: Phillips 66 Company

Attached is a public notice regarding Proposed Order No. R3-2013-0028. No later than **September 4, 2013**, you or your assignee shall ensure the attached notice is:

- Posted at the principal office of the municipality in which the facility or discharge is located, or if the plant or discharge is not located within a municipality, then at the principal office of the political subdivision with general jurisdiction over the premises on which it is located, and by posting a copy at the U.S. Post Office serving those premises.

- Published in a local newspaper or in a daily newspaper of general circulation at least once. [Note: you may instruct the newspaper to contact us if they would like an electronic version of the public notice.]

Please fill out the lower section of this form and return within 15 days of the posting and publication of the notice.

Sheila Soderberg

Digitally signed by Sheila Soderberg
DN: cn=Sheila Soderberg, o=Central Coast Water Board, ou, email=Sheila.Soderberg@waterboards.ca.gov, c=US
Date: 2013.08.21 13:30:52 -07'00'

Michael J. Thomas
Assistant Executive Officer

August 23, 2013
Date

Name of Discharger: Phillips 66 Company

In accordance with the above instructions, on _____, a copy of the public notice has been:

- Posted in the post office and principal office of the municipality nearest the premises where the effluent source is located.

- Published in a local newspaper of general circulation (attach proof of publication).

_____
Print Name, Title

_____
Signature

_____
Date

DRAFT ORDER NO. R3-2013-0028
NPDES NO. CA0000051

The following Discharger is subject to waste discharge requirements as set forth in this Order.

Table 1. Discharger Information

Discharger	Phillips 66 Company
Name of Facility	Santa Maria Refinery
Facility Address	2555 Willow Road
	Arroyo Grande, CA 93420
	San Luis Obispo County
The U.S. Environmental Protection Agency (USEPA) and the Central Coast Water Quality Control Board have classified this discharge as a major discharge.	

Discharges by the Phillips 66 Company from the discharge points identified below are subject to waste discharge requirements as set forth in this Order.

Table 2. Discharge Location

Discharge Point	Effluent Description	Discharge Point Latitude	Discharge Point Longitude	Receiving Water
001	Treated Production Wastewater and Storm Water	35º 02’ 37” N	120º 38’ 21” W	Pacific Ocean

Table 3. Administrative Information

This Order was adopted by the Central Coast Water Board on:	**December 5, 2013**
This Order shall become effective on:	**February 1, 2014**
This Order shall expire on:	**February 1, 2019**
The Discharger shall file a Report of Waste Discharge in accordance with title 23, California Code of Regulations, as application for issuance of new waste discharge requirements no later than:	August 1, 2018

IT IS HEREBY ORDERED, that Order No. R3-2007-0002 is rescinded upon the effective date of this Order except for enforcement purposes, and, in order to meet the provisions contained in division 7 of the California Water Code (CWC) (commencing with section 13000) and regulations adopted thereunder, and the provisions of the federal Clean Water Act (CWA) and regulations and guidelines adopted thereunder, the Discharger shall comply with the requirements in this Order.

Central Coast Regional Water Quality Control Board

I, Kenneth A. Harris Jr., Executive Officer, do hereby certify that this Order, with all attachments, is a full, true, and correct copy of an Order adopted by the California Regional Water Quality Control Board, Central Coastal Region, on December 5, 2013.

_____
Kenneth A, Harris Jr., Executive Officer

Table of Contents

I. Facility Information 5
II. Findings 5
III. Discharge Prohibitions 11
IV. Effluent Limitations and Discharge Specifications 11
A. Effluent Limitations – Discharge Point No. 001 11
B. Interim Effluent Limitations – Not Applicable 18
C. Land Discharge Effluent Limitations and Specifications 18
D. Reclamation Specifications – Not Applicable 18
V. Receiving Water Limitations 18
A. Surface Water Limitations for Discharge Point No. 001 (Pacific Ocean) 18
B. Groundwater Limitations 20
VI. Provisions 20
A. Standard Provisions 20
B. Monitoring and Reporting Program (MRP) Requirements 20
C. Special Provisions 21
1. Reopener Provisions 21
2. Special Studies, Technical Reports and Additional Monitoring Requirements 21
3. Best Management Practices and Pollution Prevention 22
4. Construction, Operation and Maintenance Specifications – Not Applicable 24
5. Special Provisions for Municipal Facilities (POTWs Only) – Not Applicable 24
6. Other Special Provisions – Not Applicable 24
7. Compliance Schedules – Not Applicable 24
VII. Compliance Determination 24

List of Tables

Table 1. Discharger Information 1
Table 2. Discharge Location 1
Table 3. Administrative Information 1
Table 4. Facility Information 5
Table 5. Dry Weather Discharges 6
Table 6. Basin Plan Beneficial Uses 8
Table 7. Ocean Plan Beneficial Uses 9
Table 8.a. Effluent Limitations Based on 40 CFR Part 419 11
Table 8.b. Storm Water Runoff Credits Based on 40 CFR Part 419 12
Table 9.a. Effluent Limitations, Protection of Marine Aquatic Life, Discharge Point No. 001 When Effluent Flow is Equal to or Less Than 0.285 MGD 13
Table 9.b. Effluent Limitations, Protection of Marine Aquatic Life, Discharge Point No. 001 When Effluent Flow is Greater Than 0.285 MGD 14
Table 9.c. Effluent Limitations, Protection of Human Health – Non-Carcinogens, Discharge Point No. 001 15
Table 9.d. Effluent Limitations, Protection of Human Health – Carcinogens, Discharge Point No. 001 16
Table 10. Toxicity Reduction Evaluation—Schedule 21

List of Attachments

Attachment A – Definitions....A-1
Attachment B – Map....B-1
Attachment C – Flow Schematic....C-1
Attachment D – Standard Provisions....D-1
Attachment E – Monitoring and Reporting Program (MRP)....E-1
Attachment F – Fact Sheet....F-1
Attachment G – Technology-Based Effluent Limitation Calculations....G-1

I. Facility Information

The following Discharger is subject to waste discharge requirements as set forth in this Order.

Table 4. Facility Information

Discharger	Phillips 66 Company
Name of Facility	Santa Maria Refinery
Facility Address	2555 Willow Road
	Arroyo Grande, CA 93420
	San Luis Obispo County
Facility Contact, Title, and Phone	Kristen M. Kopp, Superintendent Health, Safety and Environment, (805) 343-3241
Mailing Address	2555 Willow Road, Arroyo Grande, CA 93420
Type of Facility	Petroleum Refinery (SIC Code 2911)
Facility Design Flow	0.575 million gallons per day (MGD)

II. Findings

The California Water Resources Control Board, Central Coast Region (hereinafter the Central Coast Water Board), finds:

A. Background. The Phillips 66 Company (hereinafter Discharger) is currently discharging pursuant to Order No. R3-2007-0002 and National Pollutant Discharge Elimination System (NPDES) Permit No.CA0000051. The Discharger submitted a Report of Waste Discharge (ROWD), dated March 6, 2012, and applied for an NPDES permit renewal to discharge up to 0.575 MGD of treated wastewater, and storm water, from the Santa Maria Refinery (hereinafter Facility). The application was deemed complete on April 3, 2012.

For the purposes of this Order, references to the “Discharger”, “Facility”, or “Permittee” in applicable federal and state laws, regulations, plans, or policy are held to be equivalent to references to the Discharger herein.

B. Facility Description.

The Discharger owns and operates Santa Maria Refinery, a petroleum refinery with the primary function of converting heavy high sulfur domestic California crude oil into high quality feedstock products which are sent by pipeline to a San Francisco area refinery for finishing. The products include gas, oil, naphtha, and fuel gas. The Facility’s refining process also produces petroleum coke and elemental sulfur as by-products. Adjacent to the refinery, a Carbon Plant operates a petroleum coke plant. Products from this plant include green coke and pelletized sulfur. Discharges from the Carbon Plant are regulated independently of this permit.

The Facility operates 24 hours per day, 365 days a year, with the exception of maintenance shutdowns. The Facility has a reported long-term average rate capacity of 44,400 barrels per day.

In the report of waste discharge (ROWD), the Discharger reported the following wastewaters are typically discharged from the Facility during dry weather.

Table 5. Dry Weather Discharges

Source	Typical volume, gallons per minute (gallons per day)
Source water treatment (filter backwash, zeolite softener regeneration, and reverse osmosis reject brine)	100 (144,000)
Lab and shop drains	1 (1,440)
Boiler blowdown	8 (11,520)
Steam condensate	47 (67,680)
Storm surface collection drains	115 (165,600)
Storm surface collection sump	<1 (<1,440)
Washdown water for all units	90 (129,600)
Carbon plant sources	<1 (<1,440)
Sulfur pile runoff	4 (5,760)
Cooling tower bleed off	50 (72,000)
Remediation water from off-site underground storage tanks	<1 (<1,440)
Coke cooling and cutting purge water	13 (18,720)
Crude storage tank drainage	<0.1 (<144)
Sulfur complex sulfinol/modified stretford solution	<1 (<1,440)
Process water from vacuum, crude and coker distillation processes	128 (184,320)
Remediation water from off-site wells	<1 (<1,440)

All wastewaters except raw water treatment byproducts (filter backwash, zeolite softener regeneration, and reverse osmosis reject brine), are treated prior to discharge. The raw water treatment byproducts may be directed to the Facility's treatment system, or discharged directly to the outfall sump.

Oily wastewaters are collected in an oily water collection system and directed to an American Petroleum Institute (API) oil/water separator. Other process waters and API separator effluent are then directed to the Facility's main treatment plant, which consists of two surge tanks, dissolved air flotation, a trickling filter, an Orbal aeration system, and a secondary clarifier.

The Facility maintains two separate storm water collection systems for contact and non-contact storm water. Precipitation runoff from the oil storage tank dikes and operating units are collected in the oily water collection system with process water and directed to the API separator for treatment, as described above. Non-contact storm water from streets and unimproved areas, not subject to oil spills, is collected in a non-contact storm water sewer system and flows by gravity to an evaporation pond. This non-contact storm water is not discharged to the receiving water.

Average effluent flows from the Facility averaged approximately 0.416 MGD and 0.422 MGD over the years 2010 and 2011, respectively. Approximately 0.12 to 0.13 MGD of the total effluent flows consisted of reverse osmosis reject.

Wastewater is discharged from Discharge Point No. 001 through an approximately 27 foot deep, 1,700-foot long outfall and diffuser system to the Pacific Ocean, a water of the United States. The outfall terminates at latitude 35° 02' 37" N and longitude 120° 38' 21" W. The minimum initial dilution ratio (seawater:effluent) of the outfall is 83:1 at a flowrate of 0.285 MGD, and 68:1 at a flow rate of 0.575 MGD.

Attachment B provides a map of the area around the Facility. Attachment C provides a Facility flow schematic.

C. Legal Authorities. This Order is issued pursuant to CWA section 402 and implementing regulations adopted by the USEPA and chapter 5.5, division 7 of the California Water Code (commencing with section 13370). It shall serve as an NPDES permit for point source discharges from this facility to surface waters. This Order also serves as Waste Discharge Requirements (WDRs) pursuant to article 4, chapter 4, division 7 of the California Water Code (commencing with section 13260).

D. Background and Rationale for Requirements. The Central Coast Water Board developed the requirements in this Order based on information submitted as part of the application, through monitoring and reporting programs, and other available information. The Fact Sheet (Attachment F), which contains background information and rationale for Order requirements, is hereby incorporated into this Order and constitutes part of the Findings for this Order. Attachments A through E and G are also incorporated into this Order.

E. California Environmental Quality Act (CEQA). Pursuant to Water Code section 13389, this action to adopt an NPDES permit is exempt from the provisions of the CEQA, Public Resources Code sections 21100-21177.

F. Technology-Based Effluent Limitations. CWA Section 301(b) and USEPA's NPDES regulations at 40 CFR 122.44 require that permits include, at a minimum, conditions meeting applicable technology-based requirements and any more stringent effluent limitations necessary to meet applicable water quality standards. Discharges authorized by this Order must meet minimum federal technology-based requirements based on effluent limitations guidelines and standards (ELGs) for the Petroleum Point Source Category in Part 419, Subpart B (Cracking Subcategory). A detailed discussion of development of technology-based effluent limitations is included in the Fact Sheet (Attachment F).

G. Water Quality-Based Effluent Limitations. CWA Section 301(b) and NPDES regulations at 40 CFR 122.44(d) require that permits include limitations more stringent than applicable federal technology-based requirements where necessary to achieve applicable water quality standards.

NPDES regulations at 40 CFR 122.44(d)(1)(i) mandate that permits include effluent limitations for all pollutants that are or may be discharged at levels that have the reasonable potential to cause or contribute to an exceedance of a water quality standard, including numeric and narrative objectives within a standard. Where reasonable potential is established for a pollutant, but there is no numeric criterion or objective for the pollutant, water quality-based effluent limitations (WQBELs) must be established using: (1) USEPA criteria guidance under CWA section 304(a), supplemented where necessary by other

relevant information; (2) an indicator parameter for the pollutant of concern; or (3) a calculated numeric water quality criterion, such as a proposed state criterion or policy interpreting the state's narrative criterion, supplemented with other relevant information, as provided at 40 CFR 122.44(d)(1)(vi).

H. Water Quality Control Plans. The Central Coast Water Board has adopted the Water Quality Control Plan for the Central Coast Region (the Basin Plan) that designates beneficial uses, establishes water quality objectives (WQOs), and contains implementation programs and policies to achieve those objectives for receiving waters within the Region. To address ocean waters, the Basin Plan incorporates by reference the Water Quality Control Plan for Ocean Waters of California (the Ocean Plan). The Ocean Plan is discussed in further detail in section II.I of this Order.

The Basin Plan implements State Water Resources Control Board (State Water Board) Resolution No. 88-63, which establishes State policy that all waters, with certain exceptions, should be considered suitable or potentially suitable for municipal or domestic supply (MUN). Because total dissolved solids (TDS) levels for marine waters exceed 3,000 mg/L, such waters are not considered suitable for municipal or domestic supply and therefore meet an exception to Resolution No. 88-63. Beneficial uses established by the Basin Plan for the Pacific Ocean are presented below.

Table 6. Basin Plan Beneficial Uses

Discharge Point	Receiving Water	Beneficial Use(s)
001	Coastal Waters (Point San Luis to Point Sal)	Water Contact Recreation (REC-1) Non-contact Water Recreation (REC-2) Industrial Service Supply (IND) Navigation (NAV) Marine Habitat (MAR) Shellfish Harvesting (SHELL) Commercial and Sport Fishing (COMM) Rare, threatened, or endangered species (RARE) Wildlife Habitat (WILD)

Requirements of this Order implement the Basin Plan.

I. California Ocean Plan. The State Water Board adopted the Ocean Plan in 1972 and amended it in 1978, 1983, 1988, 1990, 1997, 2000, 2005, and 2009. The State Water Board adopted the latest amendment on September 15, 2009, and was approved by the Office of Administrative Law on March 10, 2020, and subsequently the USEPA. The Ocean Plan is applicable, in its entirety, to point source discharges to the Pacific Ocean. The Ocean Plan identifies beneficial uses of ocean waters of the State to be protected as summarized in Table 7, below.

Table 7. Ocean Plan Beneficial Uses

Discharge Point	Receiving Water	Beneficial Use(s)
001	Pacific Ocean	Industrial water supply Water contact recreation Non-contact recreation Navigation Commercial and sport fishing Mariculture Preservation and enhancement of designated Areas of Special Biological Significance (ASBS) Rare and endangered species Marine habitat Fish migration Fish spawning and shellfish harvesting

In Order to protect the beneficial uses, the Ocean Plan establishes WQOs and a program of implementation. Requirements of this Order implement the Ocean Plan.

J. Alaska Rule. On March 30, 2000, USEPA revised its regulation that specifies when new and revised state and tribal water quality standards become effective for CWA purposes. [65 Fed. Reg. 24641 (April 27, 2000), codified at 40 CFR 131.21] Under the revised regulation (also known as the Alaska Rule), new and revised standards submitted to USEPA after May 30, 2000 must be approved by USEPA before being used for CWA purposes. The final rule also provides that standards already in effect and submitted to USEPA by May 30, 2000, may be used for CWA purposes, whether or not approved by USEPA.

K. Stringency of Requirements for Individual Pollutants. This Order contains both technology-based and WQBELs for individual pollutants. As discussed in section IV.B of the Fact Sheet, the Order establishes technology-based effluent limitations for biochemical oxygen demand (5-day @ 20°C)(BOD_5), total suspended solids (TSS), chemical oxygen demand (COD), oil and grease, phenolic compounds, ammonia (as N), sulfide, total chromium, hexavalent chromium, and pH for Discharge Point No. 001. These technology-based limitations implement the minimum, applicable federal technology-based requirements. These limitations are not more stringent than required by the CWA.

WQBELs have been scientifically derived to implement WQOs that protect beneficial uses. The WQOs and beneficial uses implemented by this Order are contained in the Basin Plan and the 2009 Ocean Plan. These WQOs and beneficial uses are the applicable water quality standards pursuant to 40 CFR 131.21(c)(1) and have been approved pursuant to federal law. WQBELs for toxic pollutants are derived using procedures established by the Ocean Plan.

All beneficial uses and WQOs contained in the Basin Plan were approved under state law and submitted to and approved by USEPA prior to May 30, 2000. Any WQOs and beneficial uses submitted to USEPA prior to May 30, 2000, but not approved by USEPA before that date, are nonetheless “applicable water quality standards for purposes of the

CWA" pursuant to section 131.21(c)(1). Collectively, this Order's restrictions on individual pollutants are no more stringent than required to implement the requirements of the CWA.

L. Antidegradation Policy. NPDES regulations at 40 CFR 131.12 require that State water quality standards include an antidegradation policy consistent with the federal policy. The State Water Board established California's antidegradation policy in State Water Board Resolution No. 68-16, which incorporates the federal antidegradation policy where the federal policy applies under federal law. Resolution No. 68-16 requires that the existing quality of waters be maintained unless degradation is justified based on specific findings. The Basin Plan implements and incorporates by reference both the State and federal antidegradation policies. As discussed in section IV.D.2 of the Fact Sheet, the permitted discharge is consistent with the antidegradation provisions of 40 CFR 131.12 and State Water Board Resolution No. 68-16.

M. Anti-Backsliding Requirements. CWA Sections 402(o)(2) and 303(d)(4) and NPDES regulations at 40 CFR 122.44 (l) prohibit backsliding in NPDES permits. These anti-backsliding provisions require effluent limitations in a reissued permit to be as stringent as those in the previous permit, with some exceptions where limitations may be relaxed. As discussed in section IV.D.1 of the Fact Sheet, effluent limitations and other requirements established by this Order satisfy applicable anti-backsliding provisions of the CWA and NPDES regulations.

N. Endangered Species Act. This Order does not authorize any act that results in the taking of a threatened or endangered species or any act that is now prohibited, or becomes prohibited in the future, under either the California Endangered Species Act (Fish and Game Code sections 2050 to 2097) or the federal Endangered Species Act (16 U.S.C.A. sections 1531 to 1544). This Order requires compliance with effluent limits, receiving water limits, and other requirements to protect the beneficial uses of waters of the State. The Discharger is responsible for meeting all requirements of State and federal law regarding threatened and endangered species.

O. Monitoring and Reporting. NPDES regulations at 40 CFR 122.48 require that all NPDES permits specify requirements for recording and reporting monitoring results. California Water Code sections 13267 and 13383 authorize the Central Coast Water Board to require technical and monitoring reports. The Monitoring and Reporting Program (MRP) (Attachment E) establishes monitoring and reporting requirements to implement federal and State requirements.

P. Standard and Special Provisions. Standard Provisions, which apply to all NPDES permits in accordance with NPDES regulations at 40 CFR 122.41, and additional conditions applicable to specified categories of permits in accordance with 40 CFR 122.42, are provided in Attachment D. The Central Coast Water Board has also included in this Order special provisions applicable to the Discharger. A rationale for the special provisions contained in this Order is provided in the attached Fact Sheet

Q. Provisions and Requirements Implementing State Law. The provisions/requirements in subsections IV.C of this Order are included to implement state law only. These provisions/requirements are not required or authorized under the federal CWA;

consequently, violations of these provisions/requirements are not subject to the enforcement remedies that are available for NPDES violations.

R. Notification of Interested Parties. The Central Coast Water Board has notified the Discharger and interested agencies and persons of its intent to prescribe Waste Discharge Requirements for the discharge and has provided them with an opportunity to submit their written comments and recommendations. Details of notification are provided in the Fact Sheet accompanying this Order.

S. Consideration of Public Comment. The Central Coast Water Board, in a public meeting, heard and considered all comments pertaining to the discharge. Details of the Public Hearing are provided in the Fact Sheet of this Order.

T. Privilege to Discharge. A permit and the privilege to discharge waste into waters of the State is conditional upon the discharge complying with provisions of Division 7 of the CWC and the CWA (as amended or supplemented by implementing guidelines and regulations); and with any more stringent effluent limitations necessary to implement water quality control plans, to protect beneficial uses, and to prevent nuisances.

III. Discharge Prohibitions

A. Discharge of wastewater or storm water at a location or in a manner, other than as described by this Order is prohibited (excluding storm water regulated by General Permit No. CAS000001).

B. The bypass or overflow of wastewater or wastes to surface waters or surface water drainage courses is prohibited, except as provided for in Attachment D, Standard Provision I.G (Bypass), is prohibited.

C. The discharge of any waste not specifically regulated by this Order is prohibited.

D. The discharge of sanitary wastes to other than a subsurface septic tank/leach field system or a publically owned treatment works is prohibited.

IV. Effluent Limitations and Discharge Specifications

A. Effluent Limitations – Discharge Point No. 001

1. Effluent Limitations – Discharge Point No. 001

a. The Discharger shall maintain compliance with the following effluent limitations at Discharge Point No. 001, with compliance measured at Monitoring Location EFF-001 as described in the attached MRP.

Table 8.a. Effluent Limitations Based on 40 CFR Part 419

Parameters	Units[1]	Effluent Limitations			
		Average Monthly	Maximum Daily	Instantaneous Minimum	Instantaneous Maximum
Biochemical Oxygen Demand (5-day @	lbs/day	204	367	--	--

Parameters	Units[1]	Effluent Limitations			
		Average Monthly	Maximum Daily	Instantaneous Minimum	Instantaneous Maximum
20°C) (BOD_5)					
Total Suspended Solids (TSS)	lbs/day	163	256	--	--
Chemical Oxygen Demand (COD)	lbs/day	1,430	2,750	--	--
Oil and Grease	lbs/day	59.4	111	--	--
Phenolic Compounds	lbs/day	1.06	2.7	--	--
Ammonia (as N)	lbs/day	220	290	--	--
Sulfide	lbs/day	1.08	2.41	--	--
Total Chromium	lbs/day	1.26	3.60	--	--
Hexavalent Chromium, Total Recoverable	lbs/day	0.102	0.230	--	--
pH	s.u.	--	--	6.0	9.0

[1] Mass emissions shall be calculated and reported for all parameters with mass-based effluent limitations using the formula: lbs/day = 8.34 (daily average flow as MGD)(concentration as mg/L)

In addition to the effluent limitations contained in Table 8.a., additional mass loading credits for storm water runoff, which is commingled with process wastewater and is treated in the main treatment system and discharged to the Pacific Ocean, may be granted. During wet weather runoff, the following incremental effluent credits shall be added to the effluent limitations specified in Table 8.a. provided the Discharger reports the volume of discharged storm water runoff commingled with the process wastewater for each day.

Table 8.b. Storm Water Runoff Credits Based on 40 CFR Part 419

Parameters	Units	Incremental Effluent Credit	
		Monthly Average	Daily Maximum
BOD_5	lbs/1,000 gallons[1]	0.22	0.40
TSS	lbs/1,000 gallons[1]	0.18	0.28
COD	lbs/1,000 gallons[1]	1.5	3.0
Oil and Grease	lbs/1,000 gallons[1]	0.067	0.13
Phenolic Compounds	lbs/1,000 gallons[1]	0.0014	0.0029
Total Chromium	lbs/1,000 gallons[1]	0.0018	0.0050
Hexavalent Chromium	lbs/1,000 gallons[1]	0.00023	0.00052

[1] Credit calculated based on measured flow of contaminated storm water runoff commingled with process wastewater.

b. Toxic Pollutants

i. The Discharger shall maintain compliance with the following effluent limitations for toxic pollutants at Discharge Point No. 001, with compliance measured at Monitoring Location EFF-001, as described in the attached MRP.

Table 9.a. Effluent Limitations, Protection of Marine Aquatic Life, Discharge Point No. 001 When Effluent Flow is Equal to or Less Than 0.285 MGD

Parameter	Units	Effluent Limitations[1]		
		Maximum Daily[2]	Instantaneous Maximum[3]	6-Month Median[4]
Cadmium, Total Recoverable	mg/L	0.34	0.84	0.08
	lbs/day	0.81	2.00	0.19
Selenium, Total Recoverable	mg/L	5.04	12.60	1.26
	lbs/day	11.98	29.95	2.99
Silver, Total Recoverable	mg/L	0.22	0.57	0.06
	lbs/day	0.52	1.35	0.14
Total Chlorine Residual[5]	mg/L	0.67	5.04	0.17
	lbs/day	1.59	11.98	0.40
Phenolic Compounds (non-chlorinated)	mg/L	10.08	25.20	2.52
	lbs/day	23.96	59.90	5.99
Chlorinated Phenolics	mg/L	0.34	0.84	0.08
	lbs/day	0.81	2.00	0.19
Endosulfan[6]	µg/L	1.51	2.27	0.76
	lbs/day	3.59	5.40	1.81
Endrin	µg/L	0.34	0.50	0.17
	lbs/day	0.81	1.19	0.40
Hexachlorocyclohexane (HCH)[7]	µg/L	0.67	1.01	0.34
	lbs/day	1.59	2.40	0.81
Chronic Toxicity	TUc	84	--	--
Radioactivity	[8]			

[1] Based on a dilution factor of 83:1.

[2] The daily maximum shall apply to flow weighted 24-hour composite samples. Mass emissions shall be calculated and reported for all parameters with mass-based effluent limitations using the formula: lbs/day = 8.34 (daily average flow as MGD)(daily average concentration as mg/L).

[3] The instantaneous maximum shall apply to grab sample determinations. Mass emissions shall be calculated and reported for all parameters with mass-based effluent limitations using the formula: lbs/day = 8.34 (observed flow as MGD)(maximum effluent concentration as mg/L).

[4] The 6-month median shall apply as a moving median of daily values for any 180-day period in which daily values represent flow weighted average concentrations within a 24-hour period. For intermittent discharges, the daily value shall be considered equal to zero for days on which no discharge occurred. Mass emissions shall be calculated and reported for all parameters with mass-based effluent limitations using the formula: lbs/day = 8.34 (6-month median flow rate as MGD)(6-month median effluent concentration as mg/L).

[5] Water quality objectives for total chlorine residual applying to intermittent discharges not exceeding two hours shall be determined using the following equation:

$$\log(y) = -0.43 (\log x) + 1.8$$

where: y = the water quality objective (in µg/L) to apply when chlorine is being discharged
x = the duration of uninterrupted chlorine discharges in minutes

The applicable effluent limitation must then be determined using Equation No. 1 from the Ocean Plan.

[6] Shall mean the sum of endosulfan-alpha and –beta and endosulfan sulfate.

[7] Shall mean the sum of the alpha, beta, gamma and delta isomers of hexachlorocyclohexane.

[8] Radioactivity is not to exceed limits specified in Title 17, Division 1, Chapter 5, Subchapter 4, Group 3, Article 3, Section 30253 of the California Code of Regulations. Reference to Section 30253 is prospective including future changes to incorporate provisions of federal law, as the changes take effect.

Table 9.b. Effluent Limitations, Protection of Marine Aquatic Life, Discharge Point No. 001 When Effluent Flow is Greater Than 0.285 MGD

Parameter	Units	Effluent Limitations[1]		
		Maximum Daily[2]	Instantaneous Maximum[3]	6-Month Median[4]
Cadmium, Total Recoverable	mg/L	0.28	0.69	0.07
	lbs/day	1.34	3.31	0.34
Cyanide, Total[5]	mg/L	0.28	0.69	0.069
	lbs/day	1.3	3.3	0.33
Selenium, Total Recoverable	mg/L	4.14	10.35	1.04
	lbs/day	19.85	49.63	4.99
Silver, Total Recoverable	mg/L	0.18	0.47	0.05
	lbs/day	0.86	2.25	0.24
Total Chlorine Residual[6]	mg/L	0.55	4.14	0.14
	lbs/day	2.64	19.85	0.67
Phenolic Compounds (non-chlorinated)	mg/L	8.28	20.70	2.07
	lbs/day	39.71	99.27	9.93
Chlorinated Phenolics	mg/L	0.28	0.69	0.07
	lbs/day	1.34	3.31	0.34
Endosulfan[7]	µg/L	1.24	1.86	0.62
	lbs/day	5.95	8.92	2.97
Endrin	µg/L	0.28	0.41	0.14
	lbs/day	1.34	1.97	0.67
HCH[8]	µg/L	0.55	0.83	0.28
	lbs/day	2.64	3.98	1.34
Chronic Toxicity	TUc	69	--	--
Radioactivity	[9]			

[1] Based on a dilution factor of 68:1.

[2] The daily maximum shall apply to flow weighted 24-hour composite samples. Mass emissions shall be calculated and reported for all parameters with mass-based effluent limitations using the formula: lbs/day = 8.34 (daily average flow as MGD)(daily average concentration as mg/L).

[3] The instantaneous maximum shall apply to grab sample determinations. Mass emissions shall be calculated and reported for all parameters with mass-based effluent limitations using the formula: lbs/day = 8.34 (observed flow as MGD)(maximum effluent concentration as mg/L).

[4] The 6-month median shall apply as a moving median of daily values for any 180-day period in which daily values represent flow weighted average concentrations within a 24-hour period. For intermittent discharges, the daily value shall be considered equal to zero for days on which no discharge occurred. Mass emissions shall be calculated and reported for all parameters with mass-based effluent limitations using the formula: lbs/day = 8.34 (6-month median flow rate as MGD)(6-month median effluent concentration as mg/L).

[5] If a Discharger can demonstrate to the satisfaction of the Central Coast Water Board (subject to USEPA approval) that an analytical method is available to reliably distinguish between strongly and weakly complexed cyanide, effluent limitations for cyanide may be met by the combined measurement of free cyanide, simple alkali metal cyanides, and weakly complexed organometallic cyanide complexes. In order for the analytical method to be acceptable, the recovery of free cyanide from metal complexes must be comparable to that achieved by the approved method in 40 Part CFR 136.

[6] Water quality objectives for total chlorine residual applying to intermittent discharges not exceeding two hours shall be determined using the following equation:

$$\log(y) = -0.43 (\log x) + 1.8$$

where:

y = the water quality objective (in µg/L) to apply when chlorine is being discharged.

x = the duration of uninterrupted chlorine discharges in minutes.

The applicable effluent limitation must then be determined using Equation No. 1 from the Ocean Plan.

[7] Shall mean the sum of endosulfan-alpha and –beta and endosulfan sulfate.

[8] Shall mean the sum of the alpha, beta, gamma and delta isomers of hexachlorocyclohexane.

[9] Radioactivity is not to exceed limits specified in Title 17, Division 1, Chapter 5, Subchapter 4, Group 3, Article 3, Section 30253 of the California Code of Regulations. Reference to Section 30253 is prospective including future changes to incorporate provisions of federal law, as the changes take effect.

Table 9.c. Effluent Limitations, Protection of Human Health – Non-Carcinogens, Discharge Point No. 001

Parameter	Units[1]	Average Monthly Effluent Limitations	
		≤ 0.285 MGD	> 0.285 MGD
Acrolein	mg/L	18.48	15.18
	lbs/day	43.92	72.80
Bis(2-Chloroethoxy)Methane	mg/L	0.3696	0.304
	lbs/day	88.6	1.5
Bis(2-Chloroisopropyl)Ether	mg/L	100.8	82.800
	lbs/day	8,926.5	397.1
Chlorobenzene	mg/L	47.88	39.330
	lbs/day	113.8	188.6
Chromium (III)	g/L	15.96	13.110
	lbs/day	37,935	62,869.0
Di-n-butyl Phthalate	mg/L	294	241.500
	lbs/day	698.8	1,158.1
Dichlorobenzenes	mg/L	428.4	351.900
	lbs/day	1,018.3	1,687.5
Diethyl Phthalate	mg/L	2,772	2,277.00
	lbs/day	6,588.8	10,919.3
Dimethyl Phthalate	g/L	68.88	56.580
	lbs/day	163,720.9	271,329.4
4,6-Dinitro-2-Methylphenol	mg/L	18.48	15.180
	lbs/day	43.92	72.8
2,4-Dinitrophenol	mg/L	0.336	0.276
	lbs/day	8.0	13.2
Ethylbenzene	mg/L	344.4	282.900
	lbs/day	818.6	1,356.6
Fluoranthene	mg/L	1.26	1.035
	lbs/day	3.0	5.0
Hexachlorocyclopentadiene	mg/L	4.872	4.002
	lbs/day	11.6	19.2
Nitrobenzene	mg/L	0.4116	0.338
	lbs/day	1.0	1.6
Thallium	mg/L	0.168	0.138
	lbs/day	0.4	0.7
Toluene	g/L	7.14	5.865
	lbs/day	16,971.1	28,125.6
Tributyltin	µg/L	0.1176	0.097
	lbs/day	0.0003	0.0004
1,1,1-Trichloroethane	g/L	45.36	37.260
	lbs/day	107,816.2	178,680.3

[1] Mass emissions shall be calculated and reported for all parameters with mass-based effluent limitations using the formula: lbs/day = 8.34 (monthly average flow as MGD)(monthly average concentration as mg/L).

Table 9.d. Effluent Limitations, Protection of Human Health – Carcinogens, Discharge Point No. 001

Parameter	Units[1]	Average Monthly Effluent Limitations	
		= or < 0.285 MGD	> 0.285 MGD
Acrylonitrile	µg/L	8.4	6.900
	lbs/day	0.02	0.03
Aldrin	ng/L	1.848	1.518
	lbs/day	4.4×10^{-6}	7.3×10^{-6}
Benzene	µg/L	495.6	407.100
	lbs/day	1.2	1.9
Benzidine	µg/L	0.005796	0.005
	lbs/day	1.4×10^{-5}	2.3×10^{-6}
Beryllium	µg/L	2.772	2.277
	lbs/day	0.007	0.01
Bis(2-Chloroethyl)Ether	µg/L	3.78	3.105
	lbs/day	0.009	0.01
Bis(2-Ethylhexyl)Phthalate	µg/L	294	241.500
	lbs/day	0.7	1.2
Carbon Tetrachloride	µg/L	75.6	62.100
	lbs/day	0.2	0.3
Chlordane[2]	ng/L	1.932	1.587
	lbs/day	4.5×10^{-6}	7.6×10^{-6}
Chlorodibromethane	µg/L	722.4	593.400
	lbs/day	1.7	2.8
Chloroform	µg/L	10,920	8,970.000
	lbs/day	26.0	43.0
DDT[3]	ng/L	14.28	11.730
	lbs/day	3.4×10^{-5}	5.6×10^{-5}
1,4-Dichlorobenzene	µg/L	1,512	1,242.000
	lbs/day	3.6	5.9
3,3'-Dichlorobenzidine	µg/L	0.6804	0.559
	lbs/day	0.002	0.003
1,2-Dichloroethane	mg/L	2.352	1.932
	lbs/day	5.6	9.3
1,1-Dichloroethylene	mg/L	0.0756	0.062
	lbs/day	0.2	0.3
Dichlorobromomethane	mg/L	0.5208	0.428
	lbs/day	1.2	2.0
Dichloromethane	mg/L	37.8	31.050
	lbs/day	89.8	148.9
1,3-Dichloropropene	mg/L	0.7476	0.614
	lbs/day	1.8	2.9
Dieldrin	ng/L	3.36	2.760
	lbs/day	7.9×10^{-6}	1.3×10^{-5}
2,4-Dinitrotoluene	µg/L	218.4	179.400
	lbs/day	0.5	0.9
1,2-Diphenylhydrazine	µg/L	13.44	11.040
	lbs/day	0.03	0.05
Halomethanes[4]	mg/L	10.92	8.970
	lbs/day	26.0	43.0

Parameter	Units[1]	Average Monthly Effluent Limitations	
		= or < 0.285 MGD	> 0.285 MGD
Heptachlor	µg/L	0.0042	0.003
	lbs/day	10.0×10^{-6}	1.6×10^{-5}
Heptachlor Epoxide	µg/L	0.00168	0.001
	lbs/day	4.0×10^{-6}	6.6×10^{-6}
Hexachlorobenzene	ng/L	17.64	14.490
	lbs/day	4.2×10^{-5}	6.9×10^{-5}
Hexachlorobutadiene	µg/L	1,176	966.000
	lbs/day	2.8	4.6
Hexachloroethane	µg/L	210	172.500
	lbs/day	0.5	0.8
Isophorone	g/L	0.06132	0.050
	lbs/day	145.7	241.5
N-Nitrosodimethylamine	µg/L	613.2	503.700
	lbs/day	1.5	2.4
N-nitrosodi-N-propylamine	µg/L	31.92	26.220
	lbs/day	0.08	0.1
N-Nitrosodiphenylamine	µg/L	210	172.500
	lbs/day	0.5	0.8
PAHs[5]	µg/L	0.7392	0.607
	lbs/day	0.002	0.003
PCBs[6]	ng/L	1.596	1.311
	lbs/day	3.8×10^{-6}	6.3×10^{-6}
TCDD Equivalents[7]	pg/L	0.3276	0.269
	lbs/day	7.8×10^{-10}	1.3×10^{-9}
1,1,2,2-Tetrachloroethane	mg/L	0.1932	0.159
	lbs/day	0.5	0.8
Tetrachloroethylene	mg/L	0.168	0.138
	lbs/day	0.4	0.7
Toxaphene	ng/L	17.64	14.490
	lbs/day	4.2×10^{-5}	6.9×10^{-5}
Trichloroethylene	µg/L	2,268	1,863.000
	lbs/day	5.4	8.9
1,1,2-Trichloroethane	mg/L	0.7896	0.649
	lbs/day	1.9	3.1
2,4,6-Trichlorophenol	µg/L	24.4	20.01
	lbs/day	0.06	0.1
Vinyl Chloride	µg/L	3,024	2,484.000
	lbs/day	7.2	11.9

[1] Mass emissions shall be calculated and reported for all parameters with mass-based effluent limitations using the formula: lbs/day = 8.34 (monthly average flow as MGD)(monthly average concentration as mg/L).

[2] Chlordane shall mean the sum of chlordane-alpha, chlordane-gamma, chlordene-alpha, chlordene-gamma, nonachlor-alpha, nonachlor-gamma, and oxychlordane.

[3] DDT shall mean the sum of 4,4'-DDT; 2,4'-DDT; 4,4'-DDE; 2,4'-DDE; 4,4'-DDD; and 2,4'-DDD.

[4] Halomethanes shall mean the sum of bromoform, bromomethane (methyl bromide), chloromethane (methyl chloride), chlorodibromomethane, and dichlorobromomethane.

[5] PAHS (Polynuclear aromatic hydrocarbons) shall mean the sum of acenaphthylene; anthracene; 1,2-benzanthracene; 3,4-benzofluoranthene; benzo(k)fluoranthene; 1,12-benzoperylene; benzo(a)pyrene; chrysene; dibenzo(a,h)anthracene; fluorene; indeno(1,2,3-cd)pyrene; phenanthrene; and pyrene.

[6] PCBs (polychlorinated biphenyls) shall mean the sum of chlorinated biphenyls whose analytical characteristics resemble those of Aroclor-1016, Aroclor-1221, Aroclor-1232, Aroclor-1242, Aroclor-1248, Aroclor-1254, and Aroclor-1260.

[7] TCDD Equivalents shall mean the sum of those concentrations of chlorinated dibenzodioxins (2,3,7,8-CDDs) and chlorinated dibenzofurans (2,3,7,8-CDFs) multiplied by their respective toxicity factors, as listed in Appendix I of the Ocean Plan.

B. Interim Effluent Limitations – Not Applicable

C. Land Discharge Effluent Limitations and Specifications Discharges of non-contact stormwater to the evaporation/percolation basins shall not cause constituent concentrations in groundwater to exceed limits set forth in Title 22, Chapter 15, Articles 4, 4.5, 5, and 5.5 of the California Code of Regulations or cause a statistically significant increase in constituent concentrations in underlying groundwaters, as determined by samples collected from wells up gradient and down gradient of the percolation ponds.

D. Reclamation Specifications – Not Applicable

V. Receiving Water Limitations

A. Surface Water Limitations for Discharge Point No. 001 (Pacific Ocean)

Receiving water limitations are based on WQOs contained in the Ocean Plan and Basin Plan and are a required part of this Order. These receiving water limitations are designed to minimize the influence of discharge to the receiving water. The discharge shall comply with the following receiving water limitations.

1. Bacterial Characteristics

a. Within a zone bounded by the shoreline and a distance of 3 nautical miles from the shoreline, including all kelp beds, the following bacterial objectives shall be maintained throughout the water column. The zone of initial dilution for the ocean outfall is excluded.

30-day Geometric Mean – The following standards are based on the geometric mean of the five most recent samples from each site:

i. Total coliform density shall not exceed 1,000 per 100 ml;

ii. Fecal coliform density shall not exceed 200 per 100 ml; and

iii. Enterococcus density shall not exceed 35 per 100 ml.

Single Sample Maximum:

iv. Total coliform density shall not exceed 10,000 per 100 ml;

v. Fecal coliform density shall not exceed 400 per 100 ml;

vi. Enterococcus density shall not exceed 104 per 100 ml; and

vii. Total coliform density shall not exceed 1,000 per 100 ml when the fecal coliform/total coliform ratio exceeds 0.1.

2. Physical Characteristics

a. Floating particulates and grease and oil shall not be visible on the ocean surface.

b. The discharge of waste shall not cause aesthetically undesirable discoloration of the ocean surface.

c. Natural light shall not be significantly reduced at any point outside the zone of initial dilution as the result of the discharge of waste.

d. The rate of deposition of inert solids and the characteristics of inert solids in ocean sediments shall not be changed such that benthic communities are degraded.

e. Temperature of the receiving water shall not be altered to adversely affect beneficial uses, as set forth in the Water Quality Control Plan for Control of Temperature in the Coastal and Interstate Waters and Enclosed Bays and Estuaries of California.

3. Chemical Characteristics

a. The dissolved oxygen concentration shall not, at any time, be depressed more than 10 percent from that which occurs naturally, or fall below 5.0 mg/L, as the result of the discharge of oxygen demanding waste materials. The mean annual dissolved oxygen concentration shall not be less than 7.0 mg/L.

b. The pH shall not be changed at any time more than 0.2 units from that which occurs naturally, and shall be within the range of 7.0 to 8.5 at all times.

c. The dissolved sulfide concentrations of waters in and near sediments shall not be significantly increased above that present under natural conditions.

d. The concentrations of substances set forth in Table B of the Ocean Plan shall not be increased in marine sediments to that which would degrade indigenous biota.

e. The concentration of organic materials in marine sediments shall not be increased to that which would degrade marine life.

f. Nutrient materials shall not cause objectionable aquatic growth or degrade indigenous biota.

4. Biological Characteristics

a. Marine communities, including vertebrate, invertebrate, and plant species, shall not be degraded.

b. The natural taste, odor, and color of fish, shellfish, or other marine resources used for human consumption shall not be altered.

c. The concentration of organic materials in fish, shellfish, or other marine resources used for human consumption shall not bioaccumulate to levels that are harmful to human health.

5. Radioactivity

a. Discharge of radioactive waste shall not degrade marine life.

b. Radionuclides shall not be present in concentrations that are deleterious to human, plant, animal, or aquatic life; or result in the accumulation of radionuclides in the food web to an extent that presents a hazard to human, plant, animal, or aquatic life.

6. General Standards

a. The discharge shall not cause a violation of any applicable WQO or standard for receiving waters adopted by the Central Coast Water Board or State Water Board, as required by the CWA and regulations adopted thereunder.

b. Waste management systems that discharge to the ocean must be designed and operated in a manner that will maintain the indigenous marine life and a healthy and diverse marine community.

c. Waste effluents shall be discharged in a manner that provides sufficient initial dilution to minimize the concentrations of substances not removed in the treatment.

B. Groundwater Limitations

Groundwater limitations are not included in this permit. Groundwater monitoring, evaluation, and follow-up actions are addressed through a separate monitoring agreement (R3-2008-0070).

VI. Provisions

A. Standard Provisions

1. **Federal Standard Provisions.** The Discharger shall comply with all Standard Provisions included in Attachment D of this Order.

2. **Central Coast Water Board Standard Provisions.** The Discharger shall comply with all Central Coast Water Board Standard Provisions included in Attachment D of this Order.

B. Monitoring and Reporting Program (MRP) Requirements

The Discharger shall comply with the MRP, and future revisions thereto, in Attachment E of this Order. All monitoring shall be conducted according to 40 CFR Part 136, Guidelines Establishing Test Procedures for Analysis of Pollutants.

C. Special Provisions

1. Reopener Provisions

This permit may be reopened and modified in accordance with NPDES regulations at 40 CFR 122 and 124, as necessary, to include additional conditions or limitations based on newly available information or to implement any USEPA approved, new, State WQO.

2. Special Studies, Technical Reports and Additional Monitoring Requirements

a. Toxicity Reduction Requirements

If monitoring measures chronic toxicity in the effluent contained in Tables 9.a. and 9.b., the Discharger shall increase the frequency of chronic toxicity monitoring to once per week, or as otherwise approved in advance by the Executive Officer, and submit the results within 15 days of the conclusion of each test to the Central Coast Water Board. The Executive Officer will determine whether to initiate enforcement action, whether to require the Discharger to implement a Toxicity Reduction Evaluation (TRE), or to implement other measures. If directed by the Executive Officer, the Discharger shall conduct a TRE giving due consideration to guidance provided by the USEPA's TRE Procedures, Phases 1, 2, and 3, or later revised editions:

i. *Generalized Methodology for Conducting Industrial Toxicity Reduction Evaluations* (EPA/600/2-88/070).

ii. *Methods for Aquatic Toxicity identification Evaluations: Phase I Toxicity Characterization*, Second Edition (EPA/600/R-91/003).

iii. *Methods for Aquatic Toxicity Identification Evaluations, Phase II Toxicity Identification Procedures for Samples Exhibiting Acute and Chronic Toxicity* (EPA/600/R-92/080).

iv. *Methods for Aquatic Toxicity Identification Evaluations, Phase III Toxicity Confirmation Procedures for Samples Exhibiting Acute and Chronic Toxicity* (EPA/600/R-92/081).

Once sources of toxicity are identified, the Discharger shall take reasonable steps necessary to reduce toxicity to the required level.

A TRE, if necessary, shall be conducted in accordance with the following schedule.

Table 10. Toxicity Reduction Evaluation—Schedule

Action Step	When Required
Take all reasonable measures necessary to immediately reduce toxicity, where the source is known.	Within 24 hours of identification of noncompliance.
Submit to the Executive Officer a TRE study	Within 60 days of identification of non-

Action Step	When Required
plan describing the toxicity reduction procedures to be employed.	compliance.
Initiate the TRE in accordance to the workplan.	To be determined by Executive Officer.
Conduct the TRE following the procedures in the workplan.	Within the period specified in the Workplan (not to exceed one year, without an approved Workplan), or as otherwise specified by the Executive Officer.
Submit the results of the TRE, including summary of findings, required corrective action, and all results and data.	Within 60 days of completion of the TRE.
Implement corrective actions to meet Order limitations and conditions.	To be determined by the Executive Officer.
Return to regular monitoring.	One-year period or as specified by workplan.

3. Best Management Practices and Pollution Prevention

a. Pollutant Minimization Program (PMP)

The goal of the PMP is to reduce potential sources of Ocean Plan Table B toxic pollutants through pollutant minimization (control) strategies, including pollution prevention measures, to maintain effluent concentrations at or below the effluent limitation.

i. Determining the Need for a PMP

(a) The Discharger shall develop and implement a PMP if:

(1) A calculated effluent limitation is less than the reported Minimum Level (ML);

(2) The concentration of the pollutant is reported as Detected but Not Quantifiable (DNQ); and,

(3) There is evidence showing that the pollutant is present in the effluent above the calculated effluent limitation. Such evidence may include: health advisories for fish consumption; presence of whole effluent toxicity; results of benthic or aquatic organism tissue sampling; sample results from analytical methods more sensitive than methods included in the permit; and the concentration of the pollutant is reported as DNQ and the effluent limitation is less than the Method Detection Limit (MDL).

(b) Alternatively, the Discharger shall develop and implement a PMP if:

(1) A calculated effluent limitation is less than the MDL;

(2) The concentration of the pollutant is reported as Non-Detect (ND); and,

(3) There is evidence showing that the pollutant is present in the effluent above the calculated effluent limitation. Such evidence may include: health advisories for fish consumption; presence of whole effluent toxicity; results of benthic or aquatic organism tissue sampling; sample results from analytical methods more sensitive than methods included in the permit; and the concentration of the pollutant is reported as DNQ and the effluent limitation is less than the MDL.

ii. Elements of a PMP

A PMP shall include actions and submittals acceptable to the Central Coast Water Board including, but not limited to, the following.

(a) An annual review and semiannual monitoring of potential sources of the reportable pollutant, which may include fish tissue monitoring and other bio-uptake sampling;

(b) Quarterly monitoring for the reportable pollutant in influent to the wastewater treatment system;

(c) Submittal of a control strategy designed to proceed toward the goal of maintaining concentrations of the reportable priority pollutant in the effluent at or below the calculated effluent limitation;

(d) Implementation of appropriate cost-effective control measures for the pollutant, consistent with the control strategy;

(e) An annual status report that shall be sent to the Executive Officer that includes:

(1) All PMP monitoring results for the previous year;

(2) A list of potential sources of the reportable pollutant;

(3) A summary of all actions taken in accordance with the control strategy; and,

(4) A description of actions to be taken in the following year.

4. **Construction, Operation and Maintenance Specifications – Not Applicable**

5. **Special Provisions for Municipal Facilities (POTWs Only) – Not Applicable**

6. **Other Special Provisions – Not Applicable**

7. **Compliance Schedules – Not Applicable**

VII. Compliance Determination

Compliance with the effluent limitations contained in section IV of this Order will be determined as specified below:

A. General. Compliance with effluent limitations for reportable pollutants shall be determined using sample reporting protocols defined in the MRP and Attachment A of this Order. For purposes of reporting and administrative enforcement by the Water Boards, the Discharger shall be deemed out of compliance with effluent limitations if the concentration of the reportable pollutant in the monitoring sample is greater than the effluent limitation and greater than or equal to the reported ML.

B. Multiple Sample Data. When determining compliance with a measure of central tendency (arithmetic mean, geometric mean, median, etc.) of multiple sample analyses and the data set contains one or more reported determinations of DNQ or ND, the Discharger shall compute the median in place of the arithmetic mean in accordance with the following procedure:

7. The data set shall be ranked from low to high, ranking the reported ND determinations lowest, DNQ determinations next, followed by quantified values (if any). The order of the individual ND or DNQ determinations is unimportant.

8. The median value of the data set shall be determined. If the data set has an odd number of data points, then the median is the middle value. If the data set has an even number of data points, then the median is the average of the two values around the middle unless one or both of the points are ND or DNQ, in which case the median value shall be the lower of the two data points where DNQ is lower than a value and ND is lower than DNQ.

Attachment A – Definitions

Acute Toxicity:

a. Acute Toxicity (TUa)

Expressed in Toxic Units Acute (TUa)

$$TUa = \frac{100}{\text{96-hr LC}_{50\%}}$$

b. Lethal Concentration 50% (LC 50)

LC 50 (percent waste giving 50% survival of test organisms) shall be determined by static or continuous flow bioassay techniques using standard marine test species as specified in Ocean Plan Appendix III. If specific identifiable substances in wastewater can be demonstrated by the discharger as being rapidly rendered harmless upon discharge to the marine environment, but not as a result of dilution, the LC 50 may be determined after the test samples are adjusted to remove the influence of those substances.

When it is not possible to measure the 96-hour LC 50 due to greater than 50 percent survival of the test species in 100 percent waste, the toxicity concentration shall be calculated by the expression:

$$TUa = \frac{\log (100 - S)}{1.7}$$

where: S = percentage survival in 100% waste. If S > 99, TUa shall be reported as zero.

Areas of Special Biological Significance (ASBS): are those areas designated by the State Water Board as ocean areas requiring protection of species or biological communities to the extent that alteration of natural water quality is undesirable. All Areas of Special Biological Significance are also classified as a subset of STATE WATER QUALITY PROTECTION AREAS.

Average Monthly Effluent Limitation (AMEL): the highest allowable average of daily discharges over a calendar month, calculated as the sum of all daily discharges measured during a calendar month divided by the number of daily discharges measured during that month.

Average Weekly Effluent Limitation (AWEL): the highest allowable average of daily discharges over a calendar week (Sunday through Saturday), calculated as the sum of all daily discharges measured during a calendar week divided by the number of daily discharges **measured during that week.**

Chlordane shall mean the sum of chlordane-alpha, chlordane-gamma, chlordene-alpha, chlordene-gamma, nonachlor-alpha, nonachlor-gamma, and oxychlordane.

Chronic Toxicity: This parameter shall be used to measure the acceptability of waters for supporting a healthy marine biota until improved methods are developed to evaluate biological response.

a. Chronic Toxicity (TUc)

   Expressed as Toxic Units Chronic (TUc)

   $$TUc = \frac{100}{NOEL}$$

b. No Observed Effect Level (NOEL)

   The NOEL is expressed as the maximum percent effluent or receiving water that causes no observable effect on a test organism, as determined by the result of a critical life stage toxicity test listed in Ocean Plan Appendix II.

Daily Discharge: Daily Discharge is defined as either: (1) the total mass of the constituent discharged over the calendar day (12:00 am through 11:59 pm) or any 24-hour period that reasonably represents a calendar day for purposes of sampling (as specified in the permit), for a constituent with limitations expressed in units of mass or; (2) the unweighted arithmetic mean measurement of the constituent over the day for a constituent with limitations expressed in other units of measurement (e.g., concentration).

The daily discharge may be determined by the analytical results of a composite sample taken over the course of one day (a calendar day or other 24-hour period defined as a day) or by the arithmetic mean of analytical results from one or more grab samples taken over the course of the day.

For composite sampling, if 1 day is defined as a 24-hour period other than a calendar day, the analytical result for the 24-hour period will be considered as the result for the calendar day in which the 24-hour period ends.

DDT shall mean the sum of 4,4’DDT, 2,4’DDT, 4,4’DDE, 2,4’DDE, 4,4’DDD, and 2,4’DDD.

Degrade: Degradation shall be determined by comparison of the waste field and reference site(s) for characteristic species diversity, population density, contamination, growth anomalies, debility, or supplanting of normal species by undesirable plant and animal species. Degradation occurs if there are significant differences in any of three major biotic groups, namely, demersal fish, benthic invertebrates, or attached algae. Other groups may be evaluated where benthic species are not affected, or are not the only ones affected.

Detected, but Not Quantified (DNQ) are those sample results less than the reported Minimum Level, but greater than or equal to the laboratory’s MDL.

Dichlorobenzenes shall mean the sum of 1,2- and 1,3-dichlorobenzene.

Downstream Ocean Waters shall mean waters downstream with respect to ocean currents.

Dredged Material: Any material excavated or dredged from the navigable waters of the United States, including material otherwise referred to as “spoil”.

Enclosed Bays are indentations along the coast that enclose an area of oceanic water within distinct headlands or harbor works. Enclosed bays include all bays where the narrowest distance between headlands or outermost harbor works is less than 75 percent of the greatest dimension of the enclosed portion of the bay. This definition includes but is not limited to: Humboldt Bay, Bodega Harbor, Tomales Bay, Drakes Estero, San Francisco Bay, Morro Bay, Los Angeles Harbor, Upper and Lower Newport Bay, Mission Bay, and San Diego Bay.

Endosulfan shall mean the sum of endosulfan-alpha and -beta and endosulfan sulfate.

Estuaries and Coastal Lagoons are waters at the mouths of streams that serve as mixing zones for fresh and ocean waters during a major portion of the year. Mouths of streams that are temporarily separated from the ocean by sandbars shall be considered as estuaries. Estuarine waters will generally be considered to extend from a bay or the open ocean to the upstream limit of tidal action but may be considered to extend seaward if significant mixing of fresh and salt water occurs in the open coastal waters. The waters described by this definition include but are not limited to the Sacramento-San Joaquin Delta as defined by Section 12220 of the California Water Code, Suisun Bay, Carquinez Strait downstream to Carquinez Bridge, and appropriate areas of the Smith, Klamath, Mad, Eel, Noyo, and Russian Rivers.

Halomethanes shall mean the sum of bromoform, bromomethane (methyl bromide) and chloromethane (methyl chloride).

HCH shall mean the sum of the alpha, beta, gamma (lindane) and delta isomers of hexachlorocyclohexane.

Initial Dilution is the process that results in the rapid and irreversible turbulent mixing of wastewater with ocean water around the point of discharge.

For a submerged buoyant discharge, characteristic of most municipal and industrial wastes that are released from the submarine outfalls, the momentum of the discharge and its initial buoyancy act together to produce turbulent mixing. Initial dilution in this case is completed when the diluting wastewater ceases to rise in the water column and first begins to spread horizontally.

For shallow water submerged discharges, surface discharges, and non-buoyant discharges, characteristic of cooling water wastes and some individual discharges, turbulent mixing results primarily from the momentum of discharge. Initial dilution, in these cases, is considered to be completed when the momentum induced velocity of the discharge ceases to produce significant mixing of the waste, or the diluting plume reaches a fixed distance from the discharge to be specified by the Central Coast Board, whichever results in the lower estimate for initial dilution.

Instantaneous Maximum Effluent Limitation: the highest allowable value for any single grab sample or aliquot (i.e., each grab sample or aliquot is independently compared to the instantaneous maximum limitation).

Instantaneous Minimum Effluent Limitation: the lowest allowable value for any single grab sample or aliquot (i.e., each grab sample or aliquot is independently compared to the instantaneous minimum limitation).

Kelp Beds, for purposes of the bacteriological standards of the Ocean Plan, are significant aggregations of marine algae of the genera Macrocystis and Nereocystis. Kelp beds include the total foliage canopy of Macrocystis and Nereocystis plants throughout the water column.

Mariculture is the culture of plants and animals in marine waters independent of any pollution source.

Material: (a) In common usage: (1) the substance or substances of which a thing is made or composed (2) substantial; (b) For purposes of the Ocean Plan relating to waste disposal, dredging and the disposal of dredged material and fill, MATERIAL means matter of any kind or description which is subject to regulation as waste, or any material dredged from the navigable waters of the United States. See also, DREDGED MATERIAL.

Maximum Daily Effluent Limitation (MDEL): the highest allowable daily discharge of a pollutant.

MDL (Method Detection Limit) is the minimum concentration of a substance that can be measured and reported with 99% confidence that the analyte concentration is greater than zero, as defined in title 40 of the Code of Federal Regulations, PART 136, Appendix B.

Minimum Level (ML) is the concentrations at which the entire analytical system must give a recognizable signal and acceptable calibration point. The ML is the concentration in a sample that is equivalent to the concentration of the lowest calibration standard analyzed by a specific analytical procedure, assuming that all the method-specified sample weights, volumes and processing steps have been followed.

Natural Light: Reduction of natural light may be determined by the Central Coast Water Board by measurement of light transmissivity or total irradiance, or both, according to the monitoring needs of the Water Board.

Not Detected (ND) are those sample results less than the laboratory's MDL.

Ocean Waters are the territorial marine waters of the state as defined by California law to the extent these waters are outside of enclosed bays, estuaries, and coastal lagoons. If a discharge outside the territorial waters of the state could affect the quality of the waters of the state, the discharge may be regulated to assure no violation of the Ocean Plan will occur in ocean waters.

PAHs (polynuclear aromatic hydrocarbons) shall mean the sum of acenaphthylene, anthracene, 1,2-benzanthracene, 3,4-benzofluoranthene, benzo[k]fluoranthene, 1,12-benzoperylene, benzo[a]pyrene, chrysene, dibenzo[ah]anthracene, fluorene, indeno[1,2,3-cd]pyrene, phenanthrene and pyrene.

PCBs (polychlorinated biphenyls) shall mean the sum of chlorinated biphenyls whose analytical characteristics resemble those of Aroclor-1016, Aroclor-1221, Aroclor-1232, Aroclor-1242, Aroclor-1248, Aroclor-1254 and Aroclor-1260.

Pollutant Minimization Program (PMP) means waste minimization and pollution prevention actions that include, but are not limited to, product substitution, waste stream recycling, alternative waste management methods, and education of the public and businesses. The goal of the PMP shall be to reduce all potential sources of Ocean Plan Table B pollutants through pollutant minimization (control) strategies, including pollution prevention measures as appropriate, to maintain the effluent concentration at or below the water quality-based effluent limitation. Pollution prevention measures may be particularly appropriate for persistent bioaccumulative priority pollutants where there is evidence that beneficial uses are being impacted. The Central Coast Water Board may consider cost effectiveness when establishing the requirements of a PMP. The completion and implementation of a Pollution Prevention Plan, if required pursuant to Water Code section 13263.3(d), shall be considered to fulfill the PMP requirements.

Reported Minimum Level is the ML (and its associated analytical method) chosen by the Discharger for reporting and compliance determination from the MLs included in this Order. The MLs included in this Order correspond to approved analytical methods for reporting a sample result that are selected by the Central Coast Water Board either from Appendix II of the Ocean Plan in accordance with section III.C.5.a. of the Ocean Plan or established in accordance with section III.C.5.b. of the Ocean Plan. The ML is based on the proper application of method-based analytical procedures for sample preparation and the absence of any matrix interferences. Other factors may be applied to the ML depending on the specific sample preparation steps employed. For example, the treatment typically applied in cases where there are matrix-effects is to dilute the sample or sample aliquot by a factor of ten. In such cases, this additional factor must be applied to the ML in the computation of the reported ML.

Satellite Collection System is the portion, if any, of a sanitary sewer system owned or operated by a different public agency than the agency that owns and operates the wastewater treatment facility that a sanitary sewer system is tributary to.

Shellfish are organisms identified by the California Department of Health Services as shellfish for public health purposes (i.e., mussels, clams and oysters).

Significant Difference is defined as a statistically significant difference in the means of two distributions of sampling results at the 95 percent confidence level.

6-Month Median Effluent Limitation: the highest allowable moving median of all daily discharges for any 180-day period.

State Water Quality Protection Areas (SWQPAs) are non-terrestrial marine or estuarine areas designated to protect marine species or biological communities from an undesirable alteration in natural water quality. All AREAS OF SPECIAL BIOLOGICAL SIGNIFICANCE (ASBS) that were previously designated by the State Water Board in Resolution Nos. 74-28, 74-32, and 75-61 are now also classified as a subset of State Water Quality Protection Areas and require special protections afforded by the Ocean Plan.

TCDD Equivalents shall mean the sum of the concentrations of chlorinated dibenzodioxins (2,3,7,8-CDDs) and chlorinated dibenzofurans (2,3,7,8-CDFs) multiplied by their respective toxicity factors, as shown in the table below.

Isomer Group	Toxicity Equivalence Factor
2,3,7,8-tetra CDD	1.0
2,3,7,8-penta CDD	0.5
2,3,7,8-hexa CDDs	0.1
2,3,7,8-hepta CDD	0.01
octa CDD	0.001
2,3,7,8 tetra CDF	0.1
1,2,3,7,8 penta CDF	0.05
2,3,4,7,8 penta CDF	0.5
2,3,7,8 hexa CDFs	0.1
2,3,7,8 hepta CDFs	0.01
octa CDF	0.001

Toxicity Reduction Evaluation (TRE) is a study conducted in a step-wise process designed to identify the causative agents of effluent or ambient toxicity, isolate the sources of toxicity, evaluate the effectiveness of toxicity control options, and then confirm the reduction in toxicity. The first steps of the TRE consist of the collection of data relevant to the toxicity, including additional toxicity testing, and an evaluation of facility operations and maintenance practices, and best management practices. A TOXICITY IDENTIFICATION EVALUATION (TIE) may be required as part of the TRE, if appropriate. (A TIE is a set of procedures to identify the specific chemical(s) responsible for toxicity. These procedures are performed in three phases (characterization, identification, and confirmation) using aquatic organism toxicity tests.)

Waste: As used in the Ocean Plan, waste includes a Discharger's total discharge, of whatever origin, i.e., gross, not net, discharge.

Water Reclamation: The treatment of wastewater to render it suitable for reuse, the transportation of treated wastewater to the place of use, and the actual use of treated wastewater for a direct beneficial use or controlled use that would not otherwise occur.

Attachment B – MAP

Figure B-1. Location Map

Image provided by Google Maps

Figure B-2. Facility Site Diagram

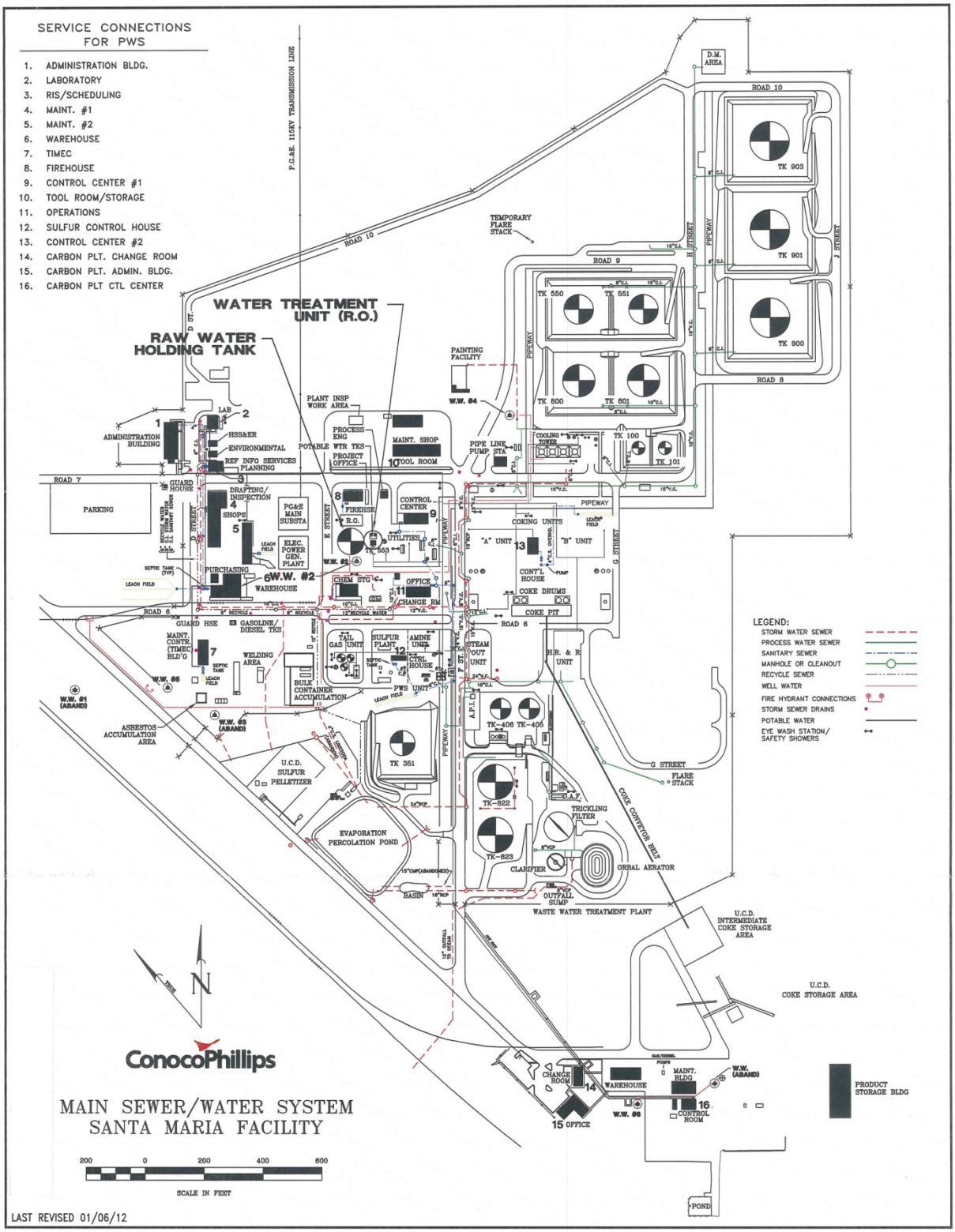

Figure B-3. Receiving Water Monitoring Stations

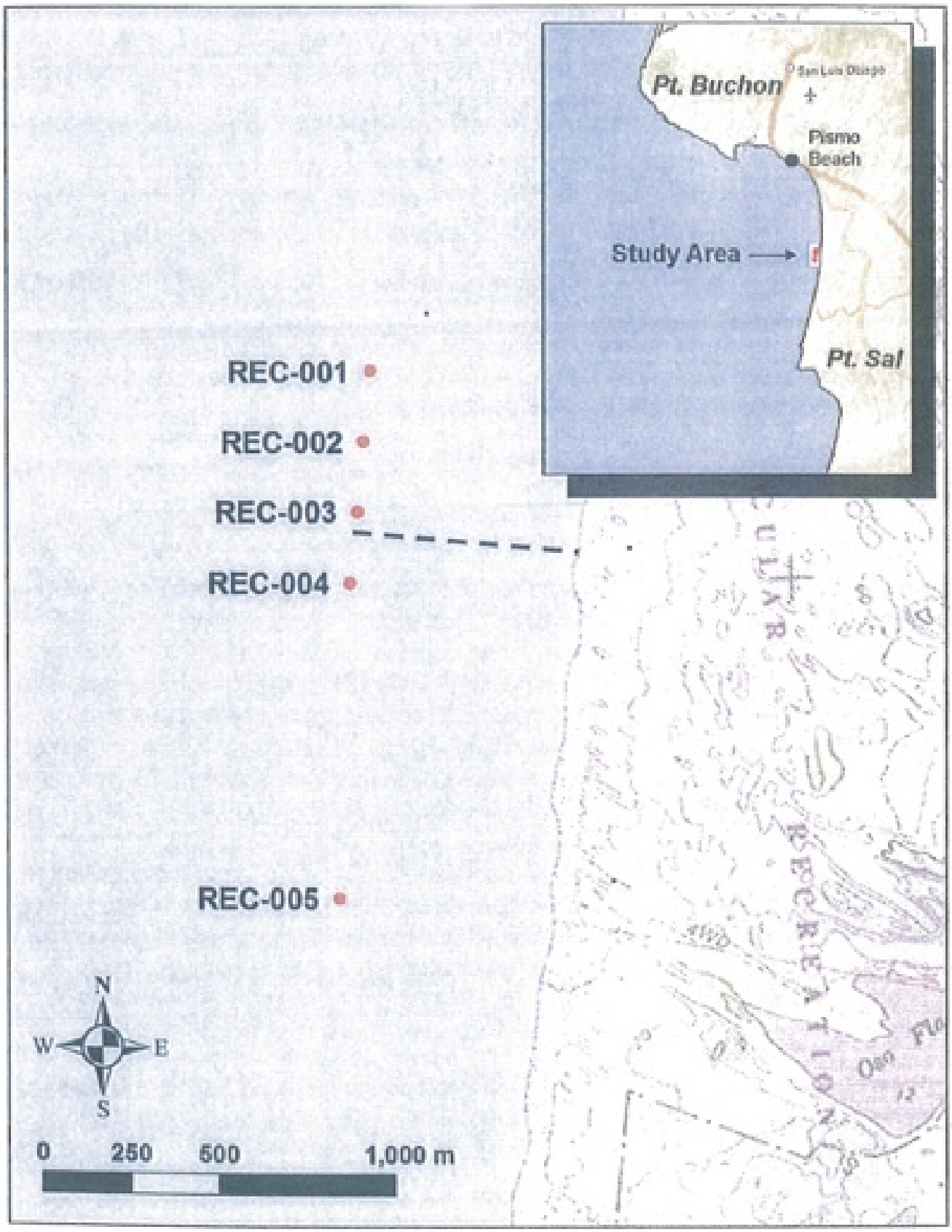

Attachment C – Flow Schematic

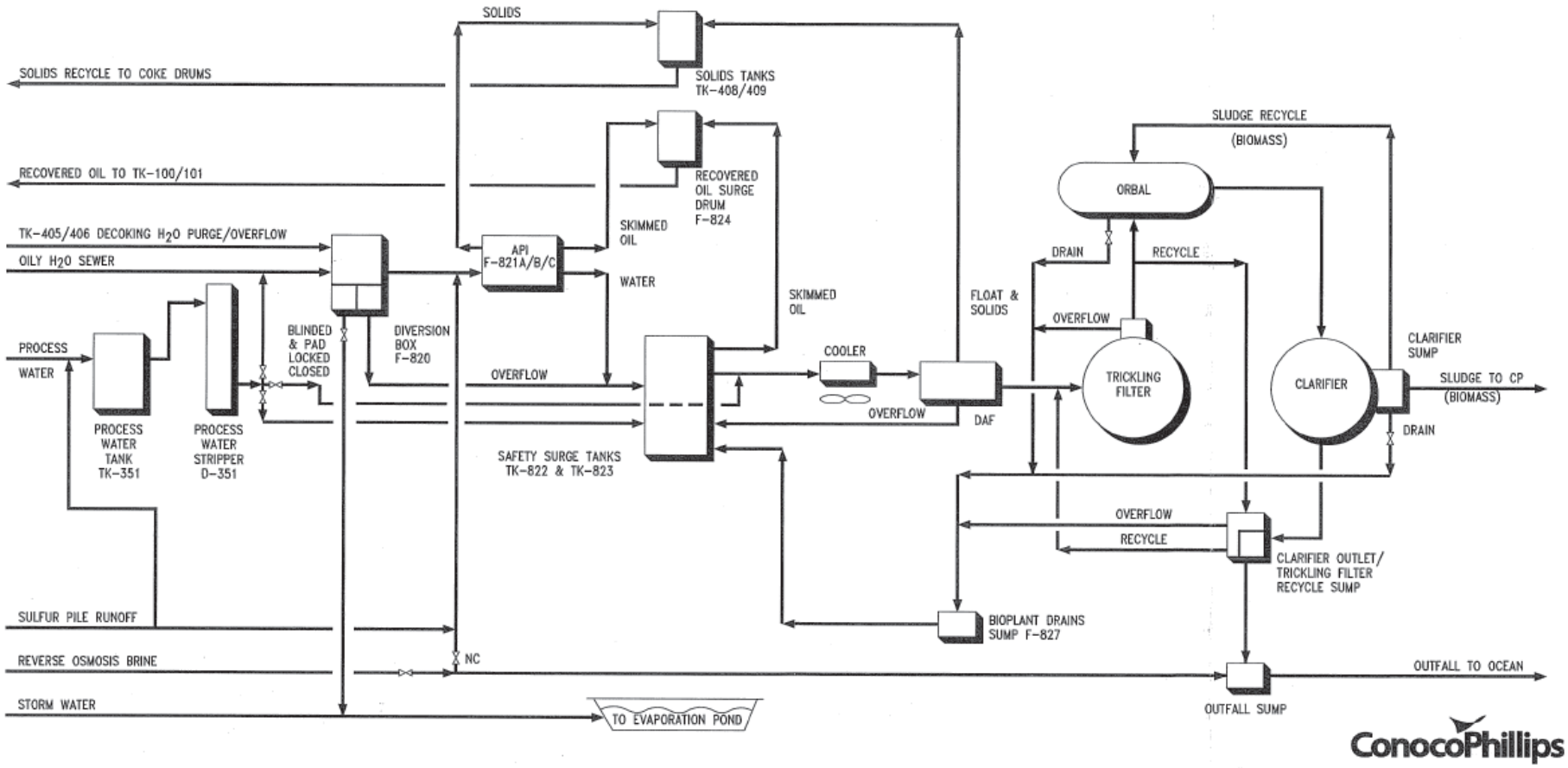

Attachment D –Standard Provisions

I. Standard Provisions – Permit Compliance

A. Duty to Comply

1. The Discharger must comply with all of the conditions of this Order. Any noncompliance constitutes a violation of the Clean Water Act (CWA) and the California Water Code and is grounds for enforcement action, for permit termination, revocation and reissuance, or modification; or denial of a permit renewal application. (40 CFR § 122.41(a).)

2. The Discharger shall comply with effluent standards or prohibitions established under Section 307(a) of the CWA for toxic pollutants and with standards for sewage sludge use or disposal established under Section 405(d) of the CWA within the time provided in the regulations that establish these standards or prohibitions, even if this Order has not yet been modified to incorporate the requirement. (40 CFR § 122.41(a)(1).)

B. Need to Halt or Reduce Activity Not a Defense

It shall not be a defense for a Discharger in an enforcement action that it would have been necessary to halt or reduce the permitted activity in order to maintain compliance with the conditions of this Order. (40 CFR § 122.41(c).)

C. Duty to Mitigate

The Discharger shall take all reasonable steps to minimize or prevent any discharge or sludge use or disposal in violation of this Order that has a reasonable likelihood of adversely affecting human health or the environment. (40 CFR § 122.41(d).)

D. Proper Operation and Maintenance

The Discharger shall at all times properly operate and maintain all facilities and systems of treatment and control (and related appurtenances) which are installed or used by the Discharger to achieve compliance with the conditions of this Order. Proper operation and maintenance also includes adequate laboratory controls and appropriate quality assurance procedures. This provision requires the operation of backup or auxiliary facilities or similar systems that are installed by a Discharger only when necessary to achieve compliance with the conditions of this Order. (40 CFR § 122.41(e).)

E. Property Rights

1. This Order does not convey any property rights of any sort or any exclusive privileges. (40 CFR § 122.41(g).)

2. The issuance of this Order does not authorize any injury to persons or property or invasion of other private rights, or any infringement of state or local law or regulations. (40 CFR § 122.5(c).)

F. Inspection and Entry

The Discharger shall allow the Central Coast Water Board, State Water Board, United States Environmental Protection Agency (USEPA), and/or their authorized representatives (including an authorized contractor acting as their representative), upon the presentation of credentials and other documents, as may be required by law, to (40 CFR § 122.41(i); Wat. Code, § 13383):

1. Enter upon the Discharger's premises where a regulated facility or activity is located or conducted, or where records are kept under the conditions of this Order (40 CFR § 122.41(i)(1));

2. Have access to and copy, at reasonable times, any records that must be kept under the conditions of this Order (40 CFR § 122.41(i)(2));

3. Inspect and photograph, at reasonable times, any facilities, equipment (including monitoring and control equipment), practices, or operations regulated or required under this Order (40 CFR § 122.41(i)(3)); and

4. Sample or monitor, at reasonable times, for the purposes of assuring Order compliance or as otherwise authorized by the CWA or the Water Code, any substances or parameters at any location. (40 CFR § 122.41(i)(4).)

G. Bypass

1. Definitions

   a. “Bypass” means the intentional diversion of waste streams from any portion of a treatment facility. (40 CFR § 122.41(m)(1)(i).)

   b. “Severe property damage” means substantial physical damage to property, damage to the treatment facilities, which causes them to become inoperable, or substantial and permanent loss of natural resources that can reasonably be expected to occur in the absence of a bypass. Severe property damage does not mean economic loss caused by delays in production. (40 CFR § 122.41(m)(1)(ii).)

2. Bypass not exceeding limitations. The Discharger may allow any bypass to occur which does not cause exceedances of effluent limitations, but only if it is for essential maintenance to assure efficient operation. These bypasses are not subject to the provisions listed in Standard Provisions – Permit Compliance I.G.3, I.G.4, and I.G.5 below. (40 CFR § 122.41(m)(2).)

3. Prohibition of bypass. Bypass is prohibited, and the Central Coast Water Board may take enforcement action against a Discharger for bypass, unless (40 CFR § 122.41(m)(4)(i)):

   a. Bypass was unavoidable to prevent loss of life, personal injury, or severe property damage (40 CFR § 122.41(m)(4)(i)(A));

b. There were no feasible alternatives to the bypass, such as the use of auxiliary treatment facilities, retention of untreated wastes, or maintenance during normal periods of equipment downtime. This condition is not satisfied if adequate back-up equipment should have been installed in the exercise of reasonable engineering judgment to prevent a bypass that occurred during normal periods of equipment downtime or preventive maintenance (40 CFR § 122.41(m)(4)(i)(B)); and

c. The Discharger submitted notice to the Central Coast Water Board as required under Standard Provisions – Permit Compliance I.G.5 below. (40 CFR § 122.41(m)(4)(i)(C).)

4. The Central Coast Water Board may approve an anticipated bypass, after considering its adverse effects, if the Water Board determines that it will meet the three conditions listed in Standard Provisions – Permit Compliance I.G.3 above. (40 CFR § 122.41(m)(4)(ii).)

5. Notice

a. Anticipated bypass. If the Discharger knows in advance of the need for a bypass, it shall submit a notice, if possible at least 10 days before the date of the bypass. (40 CFR § 122.41(m)(3)(i).)

b. Unanticipated bypass. The Discharger shall submit notice of an unanticipated bypass as required in Standard Provisions - Reporting V.E below (24-hour notice). (40 CFR § 122.41(m)(3)(ii).)

H. Upset

Upset means an exceptional incident in which there is unintentional and temporary noncompliance with technology based permit effluent limitations because of factors beyond the reasonable control of the Discharger. An upset does not include noncompliance to the extent caused by operational error, improperly designed treatment facilities, inadequate treatment facilities, lack of preventive maintenance, or careless or improper operation. (40 CFR § 122.41(n)(1).)

1. Effect of an upset. An upset constitutes an affirmative defense to an action brought for noncompliance with such technology based permit effluent limitations if the requirements of Standard Provisions – Permit Compliance I.H.2 below are met. No determination made during administrative review of claims that noncompliance was caused by upset, and before an action for noncompliance, is final administrative action subject to judicial review. (40 CFR § 122.41(n)(2).)

2. Conditions necessary for a demonstration of upset. A Discharger who wishes to establish the affirmative defense of upset shall demonstrate, through properly signed, contemporaneous operating logs or other relevant evidence that (40 CFR § 122.41(n)(3)):

a. An upset occurred and that the Discharger can identify the cause(s) of the upset (40 CFR § 122.41(n)(3)(i));

b. The permitted facility was, at the time, being properly operated (40 CFR § 122.41(n)(3)(ii));

c. The Discharger submitted notice of the upset as required in Standard Provisions – Reporting V.E.2.b below (24-hour notice) (40 CFR § 122.41(n)(3)(iii)); and

d. The Discharger complied with any remedial measures required under Standard Provisions – Permit Compliance I.C above. (40 CFR § 122.41(n)(3)(iv).)

3. Burden of proof. In any enforcement proceeding, the Discharger seeking to establish the occurrence of an upset has the burden of proof. (40 CFR § 122.41(n)(4).)

II. Standard Provisions – Permit Action

A. General

This Order may be modified, revoked and reissued, or terminated for cause. The filing of a request by the Discharger for modification, revocation and reissuance, or termination, or a notification of planned changes or anticipated noncompliance does not stay any Order condition. (40 CFR § 122.41(f).)

B. Duty to Reapply

If the Discharger wishes to continue an activity regulated by this Order after the expiration date of this Order, the Discharger must apply for and obtain a new permit. (40 CFR § 122.41(b).)

C. Transfers

This Order is not transferable to any person except after notice to the Central Coast Water Board. The Central Coast Water Board may require modification or revocation and reissuance of the Order to change the name of the Discharger and incorporate such other requirements as may be necessary under the CWA and the Water Code. (40 CFR § 122.41(l)(3); § 122.61.)

III. Standard Provisions – Monitoring

A. Samples and measurements taken for the purpose of monitoring shall be representative of the monitored activity. (40 CFR § 122.41(j)(1).)

B. Monitoring results must be conducted according to test procedures under Part 136 or, in the case of sludge use or disposal, approved under Part 136 unless otherwise specified in Part 503 unless other test procedures have been specified in this Order. (40 CFR § 122.41(j)(4); § 122.44(i)(1)(iv).)

IV. Standard Provisions – Records

A. Except for records of monitoring information required by this Order related to the Discharger's sewage sludge use and disposal activities, which shall be retained for a period of at least five years (or longer as required by Part 503), the Discharger shall retain records of all monitoring information, including all calibration and maintenance records and all original strip chart recordings for continuous monitoring instrumentation, copies of all reports required by this Order, and records of all data used to complete the application for this Order, for a period of at least three (3) years from the date of the sample, measurement, report or application. This period may be extended by request of the Central Coast Water Board Executive Officer at any time. (40 CFR § 122.41(j)(2).)

B. Records of monitoring information shall include:

1. The date, exact place, and time of sampling or measurements (40 CFR § 122.41(j)(3)(i));
2. The individual(s) who performed the sampling or measurements (40 CFR § 122.41(j)(3)(ii));
3. The date(s) analyses were performed (40 CFR § 122.41(j)(3)(iii));
4. The individual(s) who performed the analyses (40 CFR § 122.41(j)(3)(iv));
5. The analytical techniques or methods used (40 CFR § 122.41(j)(3)(v)); and
6. The results of such analyses. (40 CFR § 122.41(j)(3)(vi).)

C. Claims of confidentiality for the following information will be denied (40 CFR § 122.7(b)):

1. The name and address of any permit applicant or Discharger (40 CFR § 122.7(b)(1)); and
2. Permit applications and attachments, permits and effluent data. (40 CFR § 122.7(b)(2).)

V. Standard Provisions – Reporting

A. Duty to Provide Information

The Discharger shall furnish to the Central Coast Water Board, State Water Board, or USEPA within a reasonable time, any information which the Central Coast Water Board, State Water Board, or USEPA may request to determine whether cause exists for modifying, revoking and reissuing, or terminating this Order or to determine compliance with this Order. Upon request, the Discharger shall also furnish to the Central Coast Water Board, State Water Board, or USEPA copies of records required to be kept by this Order. (40 CFR § 122.41(h); Wat. Code, § 13267.)

B. Signatory and Certification Requirements

1. All applications, reports, or information submitted to the Central Coast Water Board, State Water Board, and/or USEPA shall be signed and certified in accordance with Standard Provisions – Reporting V.B.2, V.B.3, V.B.4, and V.B.5 below. (40 CFR § 122.41(k).)

2. All permit applications shall be signed by either a principal executive officer or ranking elected official. For purposes of this provision, a principal executive officer of a federal agency includes: (i) the chief executive officer of the agency, or (ii) a senior executive officer having responsibility for the overall operations of a principal geographic unit of the agency (e.g., Regional Administrators of USEPA). (40 CFR § 122.22(a)(3).)

3. All reports required by this Order and other information requested by the Central Coast Water Board, State Water Board, or USEPA shall be signed by a person described in Standard Provisions – Reporting V.B.2 above, or by a duly authorized representative of that person. A person is a duly authorized representative only if:

    a. The authorization is made in writing by a person described in Standard Provisions – Reporting V.B.2 above (40 CFR § 122.22(b)(1));

    b. The authorization specifies either an individual or a position having responsibility for the overall operation of the regulated facility or activity such as the position of plant manager, operator of a well or a well field, superintendent, position of equivalent responsibility, or an individual or position having overall responsibility for environmental matters for the company. (A duly authorized representative may thus be either a named individual or any individual occupying a named position.) (40 CFR § 122.22(b)(2)); and

    c. The written authorization is submitted to the Central Coast Water Board and State Water Board. (40 CFR § 122.22(b)(3).)

4. If an authorization under Standard Provisions – Reporting V.B.3 above is no longer accurate because a different individual or position has responsibility for the overall operation of the facility, a new authorization satisfying the requirements of Standard Provisions – Reporting V.B.3 above must be submitted to the Central Coast Water

Board and State Water Board prior to or together with any reports, information, or applications, to be signed by an authorized representative. (40 CFR § 122.22(c).)

5. Any person signing a document under Standard Provisions – Reporting V.B.2 or V.B.3 above shall make the following certification:

   "I certify under penalty of law that this document and all attachments were prepared under my direction or supervision in accordance with a system designed to assure that qualified personnel properly gather and evaluate the information submitted. Based on my inquiry of the person or persons who manage the system or those persons directly responsible for gathering the information, the information submitted is, to the best of my knowledge and belief, true, accurate, and complete. I am aware that there are significant penalties for submitting false information, including the possibility of fine and imprisonment for knowing violations." (40 CFR § 122.22(d).)

C. Monitoring Reports

1. Monitoring results shall be reported at the intervals specified in the Monitoring and Reporting Program (Attachment E) in this Order. (40 CFR § 122.41(l)(4).)

2. Monitoring results must be reported on a Discharge Monitoring Report (DMR) form or forms provided or specified by the Central Coast Water Board or State Water Board for reporting results of monitoring of sludge use or disposal practices. (40 CFR § 122.41(l)(4)(i).)

3. If the Discharger monitors any pollutant more frequently than required by this Order using test procedures approved under Part 136 or, in the case of sludge use or disposal, approved under Part 136 unless otherwise specified in Part 503, or as specified in this Order, the results of this monitoring shall be included in the calculation and reporting of the data submitted in the DMR or sludge reporting form specified by the Central Coast Water Board. (40 CFR § 122.41(l)(4)(ii).)

4. Calculations for all limitations, which require averaging of measurements, shall utilize an arithmetic mean unless otherwise specified in this Order. (40 CFR § 122.41(l)(4)(iii).)

D. Compliance Schedules

Reports of compliance or noncompliance with, or any progress reports on, interim and final requirements contained in any compliance schedule of this Order, shall be submitted no later than 14 days following each schedule date. (40 CFR § 122.41(l)(5).)

E. Twenty-Four Hour Reporting

1. The Discharger shall report any noncompliance that may endanger health or the environment. Any information shall be provided orally within 24 hours from the time the Discharger becomes aware of the circumstances. A written submission shall also be provided within five (5) days of the time the Discharger becomes aware of the circumstances. The written submission shall contain a description of the

noncompliance and its cause; the period of noncompliance, including exact dates and times, and if the noncompliance has not been corrected, the anticipated time it is expected to continue; and steps taken or planned to reduce, eliminate, and prevent reoccurrence of the noncompliance. (40 CFR § 122.41(l)(6)(i).)

2. The following shall be included as information that must be reported within 24 hours under this paragraph (40 CFR § 122.41(l)(6)(ii)):

   a. Any unanticipated bypass that exceeds any effluent limitation in this Order. (40 CFR § 122.41(l)(6)(ii)(A).)

   b. Any upset that exceeds any effluent limitation in this Order. (40 CFR § 122.41(l)(6)(ii)(B).)

3. The Central Coast Water Board may waive the above-required written report under this provision on a case-by-case basis if an oral report has been received within 24 hours. (40 CFR § 122.41(l)(6)(iii).)

F. Planned Changes

The Discharger shall give notice to the Central Coast Water Board as soon as possible of any planned physical alterations or additions to the permitted facility. Notice is required under this provision only when (40 CFR § 122.41(l)(1)):

1. The alteration or addition to a permitted facility may meet one of the criteria for determining whether a facility is a new source in section 122.29(b) (40 CFR § 122.41(l)(1)(i)); or

2. The alteration or addition could significantly change the nature or increase the quantity of pollutants discharged. This notification applies to pollutants that are not subject to effluent limitations in this Order. (40 CFR § 122.41(l)(1)(ii).)

3. The alteration or addition results in a significant change in the Discharger's sludge use or disposal practices, and such alteration, addition, or change may justify the application of permit conditions that are different from or absent in the existing permit, including notification of additional use or disposal sites not reported during the permit application process or not reported pursuant to an approved land application plan. (40 CFR § 122.41(l)(1)(iii).)

G. Anticipated Noncompliance

The Discharger shall give advance notice to the Central Coast Water Board or State Water Board of any planned changes in the permitted facility or activity that may result in noncompliance with General Order requirements. (40 CFR § 122.41(l)(2).)

H. Other Noncompliance

The Discharger shall report all instances of noncompliance not reported under Standard Provisions – Reporting V.C, V.D, and V.E above at the time monitoring reports are

submitted. The reports shall contain the information listed in Standard Provision – Reporting V.E above. (40 CFR § 122.41(l)(7).)

I. Other Information

When the Discharger becomes aware that it failed to submit any relevant facts in a permit application, or submitted incorrect information in a permit application or in any report to the Central Coast Water Board, State Water Board, or USEPA, the Discharger shall promptly submit such facts or information. (40 CFR § 122.41(l)(8).)

VI. Standard Provisions – Enforcement

A. The Central Coast Water Board is authorized to enforce the terms of this permit under several provisions of the Water Code, including, but not limited to, sections 13385, 13386, and 13387.

VII. Additional Provisions – Notification Levels

A. Publicly-Owned Treatment Works (POTWs)

All POTWs shall provide adequate notice to the Central Coast Water Board of the following (40 CFR § 122.42(b)):

1. Any new introduction of pollutants into the POTW from an indirect discharger that would be subject to sections 301 or 306 of the CWA if it were directly discharging those pollutants (40 CFR § 122.42(b)(1)); and

2. Any substantial change in the volume or character of pollutants being introduced into that POTW by a source introducing pollutants into the POTW at the time of adoption of the Order. (40 CFR § 122.42(b)(2).)

3. Adequate notice shall include information on the quality and quantity of effluent introduced into the POTW as well as any anticipated impact of the change on the quantity or quality of effluent to be discharged from the POTW. (40 CFR § 122.42(b)(3).)

VIII. CENTRAL COAST WATER BOARD STANDARD PROVISIONS

A. Central Coast Standard Provisions – Prohibitions

1. Introduction of "incompatible wastes" to the treatment system is prohibited.

2. Discharge of high-level radiological waste and of radiological, chemical, and biological warfare agents is prohibited.

3. Discharge of "toxic pollutants" in violation of effluent standards and prohibitions established under §307(a) of the Clean Water Act (CWA) is prohibited.

4. Discharge of sludge, sludge digester or thickener supernatant, and sludge drying bed leachate to drainageways, surface waters, or the ocean is prohibited.

5. Introduction of pollutants into the collection, treatment, or disposal system by an "indirect discharger" that:
   a. Inhibit or disrupt the treatment process, system operation, or the eventual use or disposal of sludge; or
   b. Flow through the system to the receiving water untreated; and
   c. Cause or "significantly contribute" to a violation of any requirement of this Order, is prohibited.

6. Introduction of "pollutant free" wastewater to the collection, treatment, and disposal system in amounts that threaten compliance with this order is prohibited.

B. Central Coast Standard Provisions – Provisions

1. Collection, treatment, and discharge of waste shall not create nuisance or pollution, as defined by California Water Code (CWC) §13050.

2. All facilities used for transport or treatment of wastes shall be adequately protected from inundation and washout as the result of a 100-year frequency flood.

3. Operation of collection, treatment, and disposal systems shall be in a manner that precludes public contact with wastewater.

4. Collected screenings, sludges, and other solids removed from liquid wastes shall be disposed of in a manner approved by the Executive Officer.

5. Wastewater treatment plants shall be supervised and operated by persons possessing certificates of appropriate grade pursuant to Title 23 of the California Code of Regulations.

6. After notice and opportunity for a hearing, this order may be terminated for cause, including, but not limited to:

   a. violation of any term or condition contained in this order.

b. obtaining this order by misrepresentation, or by failure to disclose fully all relevant facts.
c. a change in any condition or endangerment to human health or environment that requires a temporary or permanent reduction or elimination of the authorized discharge.
d. a substantial change in character, location, or volume of the discharge.

7. Provisions of this permit are severable. If any provision of the permit is found invalid, the remainder of the permit shall not be affected.

8. After notice and opportunity for hearing, this order may be modified or revoked and reissued for cause, including:

   a. Promulgation of a new or revised effluent standard or limitation.
   b. A material change in character, location, or volume of the discharge.
   c. Access to new information that affects the terms of the permit, including applicable schedules.
   d. Correction of technical mistakes or mistaken interpretations of law.
   e. Other causes set forth under Sub-part D of 40 CFR Part 122.

9. Safeguards shall be provided to ensure maximal compliance with all terms and conditions of this permit. Safeguards shall include preventative and contingency plans and may also include alternative power sources, stand-by generators, retention capacity, operating procedures, or other precautions. Preventative and contingency plans for controlling and minimizing the effect of accidental discharges shall:

   a. identify possible situations that could cause "upset," "overflow," "bypass," or other noncompliance. (Loading and storage areas, power outage, waste treatment unit outage, and failure of process equipment, tanks and pipes should be considered.)
   b. evaluate the effectiveness of present facilities and procedures and describe procedures and steps to minimize or correct any adverse environmental impact resulting from noncompliance with the permit.

10. Physical facilities shall be designed and constructed according to accepted engineering practice and shall be capable of full compliance with this order when properly operated and maintained. Proper operation and maintenance shall be described in an Operation and Maintenance Manual. Facilities shall be accessible during the wet-weather season.

11. The discharger shall at all times properly operate and maintain all facilities and systems of treatment and control (and related appurtenances) that are installed or used by the discharger to achieve compliance with the conditions of this order. Electrical and mechanical equipment shall be maintained in accordance with appropriate practices and standards, such as NFPA 70B, *Recommended Practice for Electrical Equipment Maintenance*; NFPA 70E, *Standard for Electrical Safety in the Workplace*; ANSI/NETA MTS *Standard for Maintenance: Testing Specifications*

for Electrical Power Equipment and Systems, or procedures established by insurance companies or other industry resources.

12. If the discharger's facilities are equipped with SCADA or other systems that implement wireless, remote operation, the discharger should implement appropriate safeguards against unauthorized access to the wireless systems. Standards such as NIST SP 800-53, Recommended Security Controls for Federal Information Systems, can provide guidance.

13. Production and use of recycled water is subject to the approval of the Central Coast Water Board. Production and use of recycled water shall be in conformance with reclamation criteria established in Chapter 3, Title 22, of the California Code of Regulations and Chapter 7, Division 7, of the California Water Code. An engineering report pursuant to section 60323, Title 22, of the California Code of Regulations is required and a waiver or water reclamation requirements from the Central Coast Water Board is required before reclaimed water is supplied for any use, or to any user, not specifically identified and approved either in this Order or another order issued by this Board.

C. Central Coast Standard Provisions – General Monitoring Requirements

1. If results of monitoring a pollutant appear to violate effluent limitations based on a weekly, monthly, 30-day, or six-month period, but compliance or non-compliance cannot be validated because sampling is too infrequent, the frequency of sampling shall be increased to validate the test within the next monitoring period. The increased frequency shall be maintained until the Executive Officer agrees the original monitoring frequency may be resumed.

   For example, if copper is monitored annually and results exceed the six-month median numerical effluent limitation in the permit, monitoring of copper must be increased to a frequency of at least once every two months (Central Coast Standard Provisions – Definitions I.G.13.). If suspended solids are monitored weekly and results exceed the weekly average numerical limit in the permit, monitoring of suspended solids must be increased to at least four (4) samples every week (Central Coast Standard Provisions – Definitions I.G.14.).

2. Water quality analyses performed in order to monitor compliance with this permit shall be by a laboratory certified by the State Department of Public Health (DPH) for the constituents being analyzed. Bioassays performed to monitor compliance with this permit shall be in accord with guidelines approved by the State Water Resources Control Board (State Water Board) and the State Department of Fish and Game.

3. Samples and measurements taken for the purpose of monitoring shall be representative of the monitored activity. Samples shall be taken during periods of peak loading conditions. Influent samples shall be samples collected from the combined flows of all incoming wastes, excluding recycled wastes. Effluent samples

shall be samples collected downstream of the last treatment unit and tributary flow and upstream of any mixing with receiving waters.

4. All monitoring instruments and devices used by the discharger to fulfill the prescribed monitoring program shall be properly maintained and calibrated as necessary to ensure their continued accuracy.

D. Central Coast Standard Provisions – General Reporting Requirements

1. Reports of marine monitoring surveys conducted to meet receiving water monitoring requirements of the Monitoring and Reporting Program shall include at least the following information:

   a. A description of climatic and receiving water characteristics at the time of sampling (weather observations, floating debris, discoloration, wind speed and direction, swell or wave action, time of sampling, tide height, etc.).
   b. A description of sampling stations, including differences unique to each station (e.g., station location, grain size, rocks, shell litter, calcareous worm tubes, evident life, etc.).
   c. A description of the sampling procedures and preservation sequence used in the survey.
   d. A description of the exact method used for laboratory analysis. In general, analysis shall be conducted according to Central Coast Standard Provisions – C.1 above, and Federal Standard Provision – Monitoring III.B. However, variations in procedure are acceptable to accommodate the special requirements of sediment analysis. All such variations must be reported with the test results.
   e. A brief discussion of the results of the survey. The discussion shall compare data from the control station with data from the outfall stations. All tabulations and computations shall be explained.

2. Reports of compliance or noncompliance with, or any progress reports on, interim and final requirements contained in any compliance schedule shall be submitted within 14 days following each scheduled date unless otherwise specified within the permit. If reporting noncompliance, the report shall include a description of the reason, a description and schedule of tasks necessary to achieve compliance, and an estimated date for achieving full compliance. A second report shall be submitted within 14 days of full compliance.

3. The “Discharger” shall file a report of waste discharge at least 180 days before making any material change or proposed change in the character, location, or plume of the discharge.

4. Within 120 days after the discharger discovers, or is notified by the Central Coast Water Board, that monthly average daily flow will or may reach design capacity of waste treatment and/or disposal facilities within four years, the discharger shall file a written report with the Central Coast Water Board. The report shall include:
   a. the best estimate of when the monthly average daily dry weather flow rate will equal or exceed design capacity.

b. a schedule for studies, design, and other steps needed to provide additional capacity for waste treatment and/or disposal facilities before the waste flow rate equals the capacity of present units.

In addition to complying with Federal Standard Provision – Reporting V.B., the required technical report shall be prepared with public participation and reviewed, approved and jointly submitted by all planning and building departments having jurisdiction in the area served by the waste collection, treatment, or disposal facilities.

5. All "Dischargers" shall submit reports electronically to the:

   Central Coast Water Board
   centralcoast@waterboards.ca.gov
   895 Aerovista Place, Suite 101
   San Luis Obispo, CA 93401-7906

   In addition, "Dischargers" with designated major discharges shall submit a copy of each document to:
   Regional Administrator
   USEPA, Region 9
   Attention: CWA Standards and Permits Office (WTR-5)
   75 Hawthorne Street
   San Francisco, California 94105

6. Transfer of control or ownership of a waste discharge facility must be preceded by a notice to the Central Coast Water Board at least 30 days in advance of the proposed transfer date. The notice must include a written agreement between the existing "Discharger" and proposed "Discharger" containing a specific date for transfer of responsibility, coverage, and liability between them. Whether a permit may be transferred without modification or revocation and reissuance is at the discretion of the Board. If permit modification or revocation and reissuance is necessary, transfer may be delayed 180 days after the Central Coast Water Board's receipt of a complete permit application. Please also see Federal Standard Provision – Permit Action II.C.

7. Except for data determined to be confidential under CWA §308 (excludes effluent data and permit applications), all reports prepared in accordance with this permit shall be available for public inspection at the office of the Central Coast Water Board or Regional Administrator of USEPA. Please also see Federal Standard Provision – Records IV.C.

8. By February 1st of each year, the discharger shall submit an annual report to the Central Coast Water Board. The report shall contain the following:

   a) Both tabular and graphical summaries of the monitoring data obtained during the previous year.

b) A discussion of the previous year's compliance record and corrective actions taken, or which may be needed, to bring the discharger into full compliance.

c) An evaluation of wastewater flows with projected flow rate increases over time and the estimated date when flows will reach facility capacity.

d) A discussion of operator certification and a list of current operating personnel and their grades of certification.

e) The date of the facility's Operation and Maintenance Manual (including contingency plans as described in Provision B.9), the date the manual was last reviewed, and whether the manual is complete and valid for the current facility.

f) A discussion of the laboratories used by the discharger to monitor compliance with effluent limits and a summary of performance relative to Section C, General Monitoring Requirements.

g) If the facility treats industrial or domestic wastewater and there is no provision for periodic sludge monitoring in the Monitoring and Reporting Program, the report shall include a summary of sludge quantities, analyses of its chemical and moisture content, and its ultimate destination.

h) If appropriate, the report shall also evaluate the effectiveness of the local source control or pretreatment program using the State Water Resources Control Board's "Guidelines for Determining the Effectiveness of Local Pretreatment Program."

E. Central Coast Standard Provisions – General Pretreatment Provisions

1. Discharge of pollutants by "indirect dischargers" in specific industrial sub-categories (appendix C, 40 CFR Part 403), where categorical pretreatment standards have been established, or are to be established, (according to 40 CFR Chapter 1, Subchapter N), shall comply with the appropriate pretreatment standards by the date specified therein or, if a new indirect discharger, upon commencement of discharge.

F. Central Coast Standard Provisions – Enforcement

1. Any person failing to file a report of waste discharge or other report as required by this permit shall be subject to a civil penalty not to exceed $5,000 per day.

2. Upon reduction, loss, or failure of the treatment facility, the "Discharger" shall, to the extent necessary to maintain compliance with this permit, control production or all discharges, or both, until the facility is restored or an alternative method of treatment is provided.

G. Central Coast Standard Provisions – Definitions (Not otherwise included in Attachment A to this Order)

1. A "composite sample" is a combination of no fewer than eight individual samples obtained at equal time intervals (usually hourly) over the specified sampling (composite) period. The volume of each individual sample is proportional to the flow

rate at the time of sampling. The period shall be specified in the Monitoring and Reporting Program ordered by the Executive Officer.

2. “Daily Maximum” limit means the maximum acceptable concentration or mass emission rate of a pollutant measured during a calendar day or during any 24-hour period reasonably representative of the calendar day for purposes of sampling. It is normally compared with results based on "composite samples” except for ammonia, total chlorine, phenolic compounds, and toxicity concentration. For all exceptions, comparisons will be made with results from a “grab sample.”

3. “Discharger," as used herein, means, as appropriate: (1) the Discharger, (2) the local sewering entity (when the collection system is not owned and operated by the Discharger), or (3) "indirect discharger" (where "Discharger" appears in the same paragraph as "indirect discharger,” it refers to the discharger.)

4. “Duly Authorized Representative" is one where:

   a. the authorization is made in writing by a person described in the signatory paragraph of Federal Standard Provision V.B.;
   b. the authorization specifies either an individual or the occupant of a position having either responsibility for the overall operation of the regulated facility, such as the plant manager, or overall responsibility for environmental matters of the company; and,
   c. the written authorization was submitted to the Central Coast Water Board.

5. A "grab sample" is defined as any individual sample collected in less than 15 minutes. "Grab samples” shall be collected during peak loading conditions, which may or may not be during hydraulic peaks. It is used primarily in determining compliance with the daily maximum limits identified in Central Coast Standard Provision – Provision G.2. and instantaneous maximum limits.

6. "Hazardous substance” means any substance designated under 40 CFR Part 116 pursuant to Section 311 of the Clean Water Act.

7. "Incompatible wastes” are:
   a. Wastes that create a fire or explosion hazard in the treatment works.
   b. Wastes that will cause corrosive structural damage to treatment works, or wastes with a pH lower than 5.0 unless the works is specifically designed to accommodate such wastes.
   c. Solid or viscous wastes in amounts that cause obstruction to flow in sewers or that cause other interference with proper operation of treatment works.
   d. Any waste, including oxygen-demanding pollutants (BOD, etc), released in such volume or strength as to cause inhibition or disruption in the treatment works and subsequent treatment process upset and loss of treatment efficiency.
   e. Heat in amounts that inhibit or disrupt biological activity in the treatment works or that raise influent temperatures above 40°C (104°F) unless the treatment works is designed to accommodate such heat.

8. "Indirect Discharger" means a non-domestic discharger introducing pollutants into a publicly owned treatment and disposal system.

9. "Log Mean" is the geometric mean. Used for determining compliance of fecal or total coliform populations, it is calculated with the following equation:

   Log Mean = (C1 x C2 x...x Cn)1/n

   in which "n" is the number of days samples were analyzed during the period and any "C" is the concentration of bacteria (MPN/100 ml) found on each day of sampling. "n" should be five or more.

10. "Mass emission rate" is a daily rate defined by the following equations:

    mass emission rate (lbs/day) = 8.34 x Q x C; and
    mass emission rate (kg/day) = 3.79 x Q x C

    where "C" (in mg/L) is the measured daily constituent concentration or the average of measured daily constituent concentrations and "Q" (in MGD) is the measured daily flowrate or the average of measured daily flowrates over the period of interest.

11. "Maximum Allowable Mass Emission Rate," whether for a month, week, day, or six-month period, is a daily rate determined with the formulas in paragraph G.10, above, using the effluent concentration limit specified in the permit for the period and the average of measured daily flows (up to the allowable flow) over the period.

12. "Maximum Allowable Six-Month Median Mass Emission Rate" is a daily rate determined with the formulas in Central Coast Standard Provision – Provision G.10, above, using the "six-month median" effluent limit specified in the permit, and the average of measured daily flows (up to the allowable flow) over a 180-day period.

13. "Median" is the value below which half the samples (ranked progressively by increasing value) fall. It may be considered the middle value, or the average of two middle values.

14. "Monthly Average" (or "Weekly Average," as the case may be) is the arithmetic mean of daily concentrations or of daily mass emission rates over the specified 30-day (or 7-day) period.

    $$Average = (X1 + X2 + ... + Xn) / n$$

    in which "n" is the number of days that samples were analyzed during the period and "X" is either the constituent concentration (mg/L) or mass emission rate (kg/day or lbs/day) for each sampled day. "n" should be four or greater.

15. "Municipality" means a city, town, borough, county, district, association, or other public body created by or under State law and having jurisdiction over disposal of sewage, industrial waste, or other waste.

16. "Overflow" means the intentional or unintentional diversion of flow from the collection and transport systems, including pumping facilities.

17. "Pollutant-free wastewater" means inflow and infiltration, stormwaters, and cooling waters and condensates which are essentially free of pollutants.

18. "Primary Industry Category" means any industry category listed in 40 CFR Part 122, Appendix A.

19. "Removal Efficiency" is the ratio of pollutants removed by the treatment unit to pollutants entering the treatment unit. Removal efficiencies of a treatment plant shall be determined using “Monthly averages" of pollutant concentrations (C, in mg/L) of influent and effluent samples collected about the same time and the following equation (or its equivalent):

$$C_{Effluent}\ Removal\ Efficiency\ (\%) = 100\ x\ (1 - C_{effluent} / C_{influent})$$

19. "Severe property damage" means substantial physical damage to property, damage to treatment facilities that causes them to become inoperable, or substantial and permanent loss to natural resources that can reasonably be expected to occur in the absence of a "bypass.” It does not mean economic loss caused by delays in production.

20. "Sludge" means the solids, residues, and precipitates separated from, or created in, wastewater by the unit processes of a treatment system.

21. To "significantly contribute" to a permit violation means an "indirect discharger" must:

    a. Discharge a daily pollutant loading in excess of that allowed by contract with the "Discharger" or by federal, state, or local law;
    b. Discharge wastewater which substantially differs in nature or constituents from its average discharge;
    c. Discharge pollutants, either alone or in conjunction with discharges from other sources, that results in a permit violation or prevents sewage sludge use or disposal; or
    d. Discharge pollutants, either alone or in conjunction with pollutants from other sources, that increase the magnitude or duration of permit violations.

22. "Toxic Pollutant" means any pollutant listed as toxic under Section 307 (a) (1) of the Clean Water Act or under 40 CFR Part 122, Appendix D. Violation of maximum daily discharge limitations are subject to 24-hour reporting (Federal Standard Provisions V.E.).

23. “Zone of Initial Dilution" means the region surrounding or adjacent to the end of an outfall pipe or diffuser ports whose boundaries are defined through calculation of a plume model verified by the State Water Board.

Attachment E – Monitoring and Reporting Program

Table of Contents

Attachment E – Monitoring and Reporting Program (MRP) E-2
I. General Monitoring Provisions E-2
II. Monitoring Locations E-4
III. Influent Monitoring Requirements E-4
IV. Effluent Monitoring Requirements E-4
A. Monitoring Location EFF-001 ..... E-4
B. Brine Monitoring. E-7
V. Whole Effluent Toxicity Testing Requirements E-7
VI. Receiving Water and Sediment Monitoring Requirements E-10
VII. Land Discharge Monitoring Requirements – Not Applicable E-13
VIII. Reclamation Monitoring Requirements – Not Applicable E-13
IX. Other Monitoring Requirements E-13
A. Ocean Outfall Inspection E-13
B. Raw Material Feed Monitoring E-14
X. Reporting Requirements E-14
A. General Monitoring and Reporting Requirements E-14
B. Self-Monitoring Reports (SMRs) E-14
C. Discharge Monitoring Reports (DMRs) E-17
D. Other Reports E-17

List of Tables

Table E-1. Monitoring Station Locations E-4
Table E-2. Influent Monitoring at INF-001 ..... E-4
Table E-3. Effluent Monitoring E-5
Table E-4. Approved Tests – Chronic Toxicity E-8
Table E-5. Sediment Monitoring E-10
Table E-6. Receiving Water Characteristic Monitoring E-12
Table E-7. Monitoring Periods and Reporting Schedule E-14

Attachment E – Monitoring and Reporting Program (MRP)

The Code of Federal Regulations (CFR) Title 40 Section 122.48 requires that all National Pollutant Discharge Elimination System (NPDES) permits specify monitoring and reporting requirements. California Water Code (CWC) sections 13267 and 13383 also authorize the Central Coast Water Board to require technical and monitoring reports. This MRP establishes monitoring and reporting requirements, which implement the federal and California regulations.

I. General Monitoring Provisions

A. Laboratories analyzing monitoring samples shall be certified by the California Department of Public Health (DPH), in accordance with Water Code section 13176, and must include quality assurance/quality control data with their reports.

B. Samples and measurements taken as required herein shall be representative of the volume and nature of the monitored discharge. All samples shall be taken at the monitoring locations specified below and, unless otherwise specified, before the monitored flow joins or is diluted by any other waste stream, body of water, or substance. Monitoring locations shall not be changed without notification to and approval of the Central Coast Water Board.

C. Appropriate flow measurement devices and methods consistent with accepted scientific practices shall be selected and used to ensure the accuracy and reliability of measurements of the volume of monitored discharges. The devices shall be installed, calibrated, and maintained to ensure that the accuracy of the measurements is consistent with the accepted capability of that type of device. Devices selected shall be capable of measuring flows with a maximum deviation of less than ±10 percent from true discharge rates throughout the range of expected discharge volumes. Guidance in selection, installation, calibration, and operation of acceptable flow measurement devices can be obtained from the following references.

1. *A Guide to Methods and Standards for the Measurement of Water Flow, U.S. Department of Commerce, National Bureau of Standards*, NBS Special Publication 421, May 1975, 96 pp. (Available from the U.S. Government Printing Office, Washington, D.C. 20402. Order by SD Catalog No. C13.10:421.)

2. *Water Measurement Manual, U.S. Department of Interior, Bureau of Reclamation, Second Edition, Revised Reprint*, 1974, 327 pp. (Available from the U.S. Government Printing Office, Washington D.C. 20402. Order by Catalog No. 172.19/2:W29/2, Stock No. S/N 24003-0027.)

3. *Flow Measurement in Open Channels and Closed Conduits, U.S. Department of Commerce, National Bureau of Standards*, NBS Special Publication 484, October 1977, 982 pp. (Available in paper copy or microfiche from National Technical Information Services (NTIS) Springfield, VA 22151. Order by NTIS No. PB-273 535/5ST.)

4. *NPDES Compliance Sampling Manual, U.S. Environmental Protection Agency, Office of Water Enforcement*, Publication MCD-51, 1977, 140 pp. (Available from the General Services Administration (8FFS), Centralized Mailing Lists Services, Building 41, Denver Federal Center, CO 80225.)

D. All monitoring instruments and devices used by the Discharger to fulfill the prescribed monitoring program shall be properly maintained and calibrated as necessary to ensure their continued accuracy. All flow measurement devices shall be calibrated at least once per year to ensure continued accuracy of the devices.

E. Monitoring results, including noncompliance, shall be reported at intervals and in a manner specified in this MRP.

F. Unless otherwise specified by this MRP, all monitoring shall be conducted according to test procedures established at 40 CFR 136, Guidelines Establishing Test Procedures for Analysis of Pollutants. All analyses shall be conducted using the lowest practical quantitation limit achievable using the specified methodology. Where effluent limitations are set below the lowest achievable quantitation limits, pollutants not detected at the lowest practical quantitation limits will be considered in compliance with effluent limitations. Analysis for toxics listed by the California Toxics Rule (CTR) shall also adhere to guidance and requirements contained in the Policy for Implementation of Toxics Standards for Inland Surface Waters, Enclosed Bays, and Estuaries of California (2005) (SIP). Analyses for toxics listed in Table B of the California Ocean Plan (2009) shall adhere to guidance and requirements contained in that document.

G. Monitoring and sampling periods are defined as follows unless otherwise specified in this MRP:

1. **Daily**: Midnight through 11:59 PM, or any 24-hour period that reasonably represents a calendar day for purposes of sampling.

2. **Weekly**: Sunday through Saturday (Note: *For weekly monitoring and sampling periods that start in one monthly reporting period but end in the next, the Discharger may report the weekly data in the monthly monitoring report containing the last day of the weekly period*.)

3. **Monthly**: 1st day of calendar month through last day of calendar month

4. **Quarterly:** First Quarter: January 1st through March 31st
   Second Quarter: April 1st through June 30th
   Third Quarter: July 1st through September 30th
   Fourth Quarter: October 1 through December 31st

5. **Semi-Annually**: First Half: January 1st through June 30th
   Second half: July 1st through December 31st

6. **Annually**: January 1st through December 31st

II. Monitoring Locations

The Discharger shall establish the following monitoring locations to demonstrate compliance with the effluent limitations, discharge specifications, and other requirements in this Order:

Table E-1. Monitoring Station Locations

Discharge Point Name	Monitoring Location Name	Monitoring Location Description
--	RAW-001	Location that allows for the accurate flow measurement of raw material (liquid hydrocarbons) fed to topping units
--	INF-001	Location that allows for the accurate flow measurement of contact storm water prior to commingling with process wastewater for treatment
001	EFF-001	Location where representative samples of treated effluent can be obtained prior to discharge to the Pacific Ocean through Discharge Point No. 001
--	REC-001	400 meters upcoast and at the same depth as midpoint of the outfall diffuser
--	REC-002	200 meters upcoast and at the same depth as midpoint of the outfall diffuser
--	REC-003	10 meters upcoast and at the same depth as midpoint of the outfall diffuser
--	REC-004	200 meters downcoast and at the same depth as midpoint of the outfall diffuser
--	REC-005	1,000 meters downcoast and at the same depth as midpoint of the outfall diffuser (this location serves as a reference)

III. Influent Monitoring Requirements

The Discharger shall estimate contact storm water runoff at INF-001 as follows (estimates may be supported by measured and/or engineering data):

Table E-2. Influent Monitoring at INF-001

Parameter	Units	Sample Type	Minimum Sampling Frequency [1]
Flow	Million gallons per day (MGD)	Estimate	1/Day

[1] During periods of storm runoff only.

IV. Effluent Monitoring Requirements

A. Monitoring Location EFF-001

1. The Discharger shall monitor effluent discharged at Discharge Point No. 001 at Monitoring Location EFF-001 as follows.

Table E-3. Effluent Monitoring

Parameter	Units[1]	Sample Type	Minimum Sampling Frequency
Maximum Daily Flow	MGD	Metered	1/Day
Average Daily Flow	MGD	Metered	1/Day
pH	standard units	Grab	1/Week
Temperature	°F	Grab	1/Week
Settleable Solids	ml/L	Grab	1/Week
Total Suspended Solids (TSS)	mg/L	Grab	2/Month
Biochemical Oxygen Demand (BOD_5) (5-day @ 20 Deg. C)	mg/L	Grab	1/Quarter
Oil and Grease	mg/L	Grab	1/Week
Ammonia (as N)	mg/L	Grab	1/Month
Total Sulfides	mg/L	Grab	1/Month
Chemical Oxygen Demand (COD)	mg/L	Grab	1/Month
TCDD equivalents[4]	pg/L	Grab[2]	1/Quarter
Arsenic, Total Recoverable	mg/L	Grab[2]	2/Year[3]
Cadmium, Total Recoverable	mg/L	Grab[2]	2/Year[3]
Chromium VI [5] [6]	mg/L	Grab[2]	2/Year[3]
Copper, Total Recoverable	mg/L	Grab[2]	2/Year[3]
Lead, Total Recoverable	mg/L	Grab[2]	2/Year[3]
Mercury, Total Recoverable	µg/L	Grab[2]	2/Year[3]
Nickel, Total Recoverable	mg/L	Grab[2]	2/Year[3]
Selenium, Total Recoverable	mg/L	Grab[2]	2/Year[3]
Silver, Total Recoverable	mg/L	Grab[2]	2/Year[3]
Zinc, Total Recoverable	mg/L	Grab[2]	2/Year[3]
Cyanide, Total [7]	mg/L	Grab[2]	2/Year[3]
Total Chlorine Residual [8]	mg/L	Grab[2]	2/Year[3]
Chronic Toxicity	TU_c	Grab[2]	2/Year[3]
Phenolic Compounds (non-chlorinated)	mg/L	Grab[2]	2/Year[3]
Chlorinated Phenolics	mg/L	Grab[2]	2/Year[3]
Endosulfan[9]	µg/L	Grab[2]	2/Year[3]
Endrin	µg/L	Grab[2]	2/Year[3]
Hexachlorocyclohexane (HCH)[10]	µg/L	Grab[2]	2/Year[3]
Radioactivity	pCi/L	Grab[2]	2/Year[3]
Acrolein	mg/L	Grab[2]	2/Year[3]
Antimony	g/L	Grab[2]	2/Year[3]
Bis(2-chloroethoxy) Methane	mg/L	Grab[2]	2/Year[3]
Bis(2-chloroisopropyl) Ether	g/L	Grab[2]	2/Year[3]
Chlorobenzene	mg/L	Grab[2]	2/Year[3]
Chromium (III)	g/L	Grab[2]	2/Year[3]
Di-n-butyl Phthalate	g/L	Grab[2]	2/Year[3]
Dichlorobenzenes[11]	g/L	Grab[2]	2/Year[3]
Diethyl Phthalate	g/L	Grab[2]	2/Year[3]
Dimethyl Phthalate	g/L	Grab[2]	2/Year[3]
4,6-dinitro-2-methylphenol	mg/L	Grab[2]	2/Year[3]
2,4-dinitrophenol	mg/L	Grab[2]	2/Year[3]
Ethylbenzene	g/L	Grab[2]	2/Year[3]

Parameter	Units[1]	Sample Type	Minimum Sampling Frequency
Fluoranthene	mg/L	Grab[2]	2/Year[3]
Hexachlorocyclopentadiene	mg/L	Grab[2]	2/Year[3]
Nitrobenzene	mg/L	Grab[2]	2/Year[3]
Thallium	mg/L	Grab[2]	2/Year[3]
Toluene	g/L	Grab[2]	2/Year[3]
1,1,1-trichloroethane	g/L	Grab[2]	2/Year[3]
1,1,2-trichloroethane	g/L	Grab[2]	2/Year[3]
Acrylonitrile	µg/L	Grab[2]	2/Year[3]
Aldrin	ng/L	Grab[2]	2/Year[3]
Benzene	mg/L	Grab[2]	2/Year[3]
Benzidine	ng/L	Grab[2]	2/Year[3]
Beryllium	µg/L	Grab[2]	2/Year[3]
Bis(2-chloroethyl) Ether	µg/L	Grab[2]	2/Year[3]
Bis(2-ethlyhexyl) Phthalate	mg/L	Grab[2]	2/Year[3]
Carbon Tetrachloride	mg/L	Grab[2]	2/Year[3]
Chlordane[12]	ng/L	Grab[2]	2/Year[3]
Chlorodibromomethane	µg/L	Grab[2]	2/Year[3]
Chloroform	mg/L	Grab[2]	2/Year[3]
DDT[13]	ng/L	Grab[2]	2/Year[3]
1,4-dichlorobenzene	mg/L	Grab[2]	2/Year[3]
3,3'-dichlorobenzidine	µg/L	Grab[2]	2/Year[3]
1,2-dichloroethane	mg/L	Grab[2]	2/Year[3]
1,1-dichloroethylene	mg/L	Grab[2]	2/Year[3]
Dichlorobromomethane	µg/L	Grab[2]	2/Year[3]
Dichloromethane	mg/L	Grab[2]	2/Year[3]
1,3-dichloropropene	mg/L	Grab[2]	2/Year[3]
Dieldrin	ng/L	Grab[2]	2/Year[3]
2,4-dinitrotoluene	mg/L	Grab[2]	2/Year[3]
1,2-diphenylhydrazine	µg/L	Grab[2]	2/Year[3]
Halomethanes[14]	mg/L	Grab[2]	2/Year[3]
Heptachlor	µg/L	Grab[2]	2/Year[3]
Heptachlor Epoxide	µg/L	Grab[2]	2/Year[3]
Hexachlorobenzene	ng/L	Grab[2]	2/Year[3]
Hexachlorobutadiene	mg/L	Grab[2]	2/Year[3]
Hexachloroethane	mg/L	Grab[2]	2/Year[3]
Isophorone	g/L	Grab[2]	2/Year[3]
N-nitrosodimethylamine	mg/L	Grab[2]	2/Year[3]
N-nitrosodi-N-propylamine	mg/L	Grab[2]	2/Year[3]
N-nitrosodiphenylamine	mg/L	Grab[2]	2/Year[3]
PAHs[15]	µg/L	Grab[2]	2/Year[3]
PCBs[16]	ng/L	Grab[2]	2/Year[3]
1,1,2,2-tetrachloroethane	g/L	Grab[2]	2/Year[3]
Tetrachloroethylene	mg/L	Grab[2]	2/Year[3]
Toxaphene	ng/L	Grab[2]	2/Year[3]
Trichloroethylene	mg/L	Grab[2]	2/Year[3]
2,4,6-trichlorophenol	µg/L	Grab[2]	2/Year[3]
Vinyl Chloride	mg/L	Grab[2]	2/Year[3]
Tributyltin	µg/L	Grab[2]	1/5-years[17]

[1] Mass emissions shall be calculated and reported for all parameters with mass-based effluent limitations using the formula:

lbs/day = 8.34 (daily average flow)(concentration as mg/L)

[2] Samples shall be analyzed using the minimum levels specified in Appendix II of the Ocean Plan, and using the standard monitoring procedures specified in Appendix III of the Ocean Plan.

[3] Sampling shall be performed in April and October. As allowed under Provision III.G.2 of the Ocean Plan, if any of these constituents do not significantly occur in the effluent, the Executive Officer may allow the constituents to be excluded from the Effluent Monitoring Program. This allowance is conditioned on the Discharger submitting an annual certification (28th of February) that the constituents being excluded from effluent monitoring are not present in the effluent. Minimum sampling and analyzing frequency shall be semi-annually for those constituents which are shown by laboratory analysis to be present in the discharge.

[4] TCDD Equivalents shall mean the sum of those concentrations of chlorinated dibenzodioxins (2,3,7,8-CDDs) and chlorinated dibenzofurans (2,3,7,8-CDFs) multiplied by their respective toxicity factors, as listed in Appendix I of the Ocean Plan.

[5] The Discharger may, at their option, meet this limitation as total chromium limitation.

[6] Reported as total chromium.

[7] If the Discharger can demonstrate to the satisfaction of the Central Coast Water Board that an analytical method is available to reliably distinguish between strongly and weekly complexed cyanide, effluent limitations for cyanide may be met by the combined measurement of free cyanide, simple alkali metals, and weakly complexed organometallic cyanide complexes. In order for the analytical method to be acceptable, the recovery of free cyanide from metal complexes must be comparable to that achieved by the approved method in 40 CFR 136, as revised July 1, 2003, or later.

[8] Water quality objectives for total chlorine residual applying to intermittent discharges not exceeding two hours shall be determined using the following equation:

$$\log(y) = -0.43 (\log x) + 1.8$$

where: y = the water quality objective (in µg/L) to apply when chlorine is being discharged
x = the duration of uninterrupted chlorine discharges in minutes

The applicable effluent limitation must then be determined using Equation No. 1 from the Ocean Plan.

[9] The sum of endosulfan-alpha and endosulfan-beta and endosulfan sulfate.

[10] Shall mean the sum of the alpha, beta, gamma and delta isomers of hexachlorocyclohexane.

[11] The sum of 1,2- and 1,3-dichlorobenzene.

[12] Chlordane shall mean the sum of chlordane-alpha, chlordane-gamma, chlordene-alpha, chlordene-gamma, nonachlor-alpha, nonachlor-gamma, and oxychlordane.

[13] DDT shall mean the sum of 4,4'-DDT; 2,4'-DDT; 4,4'-DDE; 4,4'-DDD; and 2,4'-DDD.

[14] Halomethanes shall mean the sum of bromoform, bromomethane (methyl bromide), chloromethane (methyl chloride), chlorodibromomethane, and dichlorobromomethane.

[15] PAHs (Polynuclear aromatic hydrocarbons) shall mean the sum of acenaphthylene, anthracene, 1,2-benzanthracene; 3,4-benzofluoranthene; benzo(k)fluoranthene; 1,12-benzoperylene; benzo(a)pyrene; chrysene; dibenzo(a,h)anthracene; fluorene; indeno(1,2,3-cd)pyrene; phenanthrene; and pyrene.

[16] PCBs (polychlorinated biphenyls) shall mean the sum of chlorinated biphenyls whose analytical characteristics resemble those of Aroclor-1016, Aroclor-1221, Aroclor-1232, Aroclor-1242, Aroclor-1248, Aroclor-1254, and Aroclor-1260.

[17] The Discharger shall monitor for tributyltin once during the fourth year after the effective date of the Order.

B. Brine Monitoring. The Discharger shall monitor a representative sample of brine discharges annually to facilitate mass-loading calculations for Total Suspended Solids, Biochemical Oxygen Demand, Oil and Grease, Ammonia (as N), Sulfides, and Chemical Oxygen Demand. Water supply analyses shall be used to identify other constituents (from Table E-3) that may be present in brine and for which corresponding analyses shall be performed.

V. Whole Effluent Toxicity Testing Requirements

A. Whole Effluent Chronic Toxicity

The presence of chronic toxicity shall be estimated as specified in *Short Term Methods for Estimating the Chronic Toxicity of Effluents and Receiving Waters to West Coast Marine and Estuarine Organisms*, EPA-821/600/R-95/136; *Short Term Methods for Estimating Chronic Toxicity of Effluents and Receiving Waters to Marine and Estuarine Organisms*, EPA-600-4-91-003; *Procedures Manual for Conducting Toxicity Tests*

Developed by the Marine Bioassay Project, SWRCB 9601WQ; and/or *Short Term Methods for Estimating the Chronic Toxicity of Effluents and Receiving Waters to Marine and Estuarine Organisms*, EPA/600/4-87-028 or subsequent editions.

Chronic toxicity measures a sublethal effect (e.g., reduced growth or reproduction) to experimental test organisms exposed to an effluent compared to that of the control organisms.

Chronic Toxicity (TUc) = 100/NOEL

The no observed effect level (NOEL) is the maximum tested concentration in a medium which does not cause known adverse effects upon chronic exposure in the species in question (i.e., the highest effluent concentration to which organisms are exposed in a chronic test that causes no observable adverse effects on the test organisms; e.g., the highest concentration of a toxicant to which the values for the observed responses are not statistically significantly different from the controls). Examples of chronic toxicity include, but are not limited to, measurements of toxicant effects on reproduction, growth, and sublethal effects that can include behavioral, physiological, and biochemical effects.

In accordance with the 2009 Ocean Plan, Appendix III, Standard Monitoring Procedures, the Discharger shall use the critical life stage toxicity tests specified in the table below to measure TUc. Other species or protocols will be added to the list after State Water Resources Control Board review and approval.

A minimum of three test species with approved test protocols shall be used to measure compliance with the toxicity limitation. If possible, the test species shall include a fish, an invertebrate, and an aquatic plant. After a screening period of no fewer than three sampling events, monitoring can be reduced to the most sensitive species. The sensitivity of the test organisms to a reference toxicant shall be determined concurrently with each bioassay test and reported with the test results.

Table E-4. Approved Tests – Chronic Toxicity

Species	Test	Tier[1]	Reference[2]
Giant Kelp, *Macrocystis pyrifera*	percent germination; germ tube length	1	a,c
Red abalone, *Haliotis rufescens*	abnormal shell development	1	a,c
Oyster, Crassostrea gigas; mussles, *Mytilus spp*.	abnormal shell development; percent survival	1	a,c
Urchin, *Strongylocentrotus purpuratus*; sand dollar, *Dendraster excentricus*	percent normal development	1	a,c
Urchin, Strongylocentrotus purpuratus; sand dollar, *Dendraster excentricus*	percent fertilization	1	a,c
Shrimp, *Homesimysis costata*	percent survival; growth	1	a,c
Shrimp, *Mysidopsis bahia*	percent survival; fecundity	2	d,d
Topsmelt, *Atherinops affinis*	larval growth rate; percent survival	1	a,c

Species	Test	Tier[1]	Reference[2]
Silverside, *Menidia beryllina*	larval growth rate; percent survival	2	b,d

[1] First tier methods are preferred for compliance monitoring. If first tier organisms are not available, the Discharger can use a second tier test method following approval from the Central Coast Water Board.

[2] Protocol References

a. *Chapman, G.A., D.L. Denton, and J.M. Lazorchak. 1995. Short-term Methods for Estimating Chronic Toxicity of Effluents and Receiving Waters to West Coast Marine and Estuarine Organisms*. USEPA Report No.. EPA/600/R-95/136.

b. Klemm, D.J., G.E. Morrison, T.J. Norberg-King, W.J. Peltier, and M.A. Heber. 1994. *Short-term Methods for Estimating the Chronic Toxicity of Effluents and Receiving Water to Marine and Estuarine Organisms*. USEPA Report No. EPA-600-4-91-003.

c. SWRCB 1996. *Procedures Manual for Conducting Toxicity Tests Developed by the Marine Bioassay Project*. 96-1WQ.

d. Weber, C.I., W.B. Horning, II, D.J. Klemm, T.W. Nieheisel, P.A. Lewis, E.L. Robinson, J. Menkedick, and F. Kessler (eds). 1998. *Short-term Methods for Estimating the Chronic Toxicity of Effluents and Receiving Waters to Marine and Estuarine Organisms*. EPA/600/4-87/028. National Information Service, Springfield, VA.

Dilution and control waters shall be obtained from an area of the receiving waters, typically upstream, which is unaffected by the discharge. Standard dilution water can be used, if the receiving water itself exhibits toxicity or if approved by the Water Board. If the dilution water used in testing is different from the water in which the test organisms were cultured, a second control sample using culture water shall be tested.

If the effluent to be discharged to a marine or estuarine system (e.g., salinity values in excess of 1,000 mg/L) originates from a freshwater supply, salinity of the effluent must be increased with dry ocean salts (e.g. FORTY FATHOMS®) to match salinity of the receiving water. This modified effluent shall then be tested using marine species.

If chronic toxicity is measured in the effluent above effluent limitations contained in Tables 8.a. and 8.b. of the Order, the Discharger shall resample and submit the results to the Central Coast Water Board as described in section VI.C.2.a of this Order.

B. Toxicity Reporting

1. The Discharger shall include a full report of toxicity test results with the regular semi-annual monitoring report and include the following information.

a. Toxicity test results;

b. Dates of sample collection and initiation of each toxicity test; and,

c. Chronic toxicity discharge limitations (or value).

2. Toxicity test results shall be reported according to the appropriate guidance - *Methods for Measuring the Acute Toxicity of Effluents and Receiving Waters to Freshwater and Marine Organisms*, Fifth Edition, United States Environmental Agency (USEPA) Office of Water, EPA-821-R-02-012 (2002) or the latest edition, or *Short Term Methods for Estimating the Chronic Toxicity of Effluents and Receiving*

Waters to Freshwater and Marine Organisms, EPA-821-R-02-012 (2002) or subsequent editions.

3. If the initial investigation Toxicity Reduction Evaluation (TRE) workplan is used to determine that additional (accelerated) toxicity testing is unnecessary, these results shall be submitted with the monitoring report for the month in which investigations conducted under the TRE workplan occurred.

4. Within 30 days of receipt of test results exceeding a chronic toxicity discharge limitation, the Discharger shall provide written notification to the Executive Officer of:

a. Findings of the TRE or other investigation to identify the cause(s) of toxicity; and,

b. Actions the Discharger has taken/will take, to mitigate the impact of the discharge and to prevent the recurrence of toxicity.

When corrective actions, including a TRE, have not been completed, a schedule under which corrective actions will be implemented, or the reason for not taking corrective action, if no action has been taken.

VI. Receiving Water and Sediment Monitoring Requirements

A. Bottom Sediment Monitoring

1. Ocean bottom sediment in the vicinity of the outfall diffuser for Discharge Point No. 001 shall be monitored at monitoring stations REC-001 through REC-005 as follows:

Table E-5. Sediment Monitoring

Parameter	Unit	Minimum Sampling Frequency[1]
Sediment Sulfides (reactive and refractory)	mg/kg	Once during 2017
Particle Size Distribution (% retained on #200 sieve)	--	Once during 2017
BOD_5	mg/kg	Once during 2017
COD	mg/kg	Once during 2017
Cadmium	mg/kg	Once during 2017
Total Chromium	mg/kg	Once during 2017
Copper	mg/kg	Once during 2017
Lead	mg/kg	Once during 2017
Mercury	mg/kg	Once during 2017
Nickel	mg/kg	Once during 2017
Silver	mg/kg	Once during 2017
Vanadium	mg/kg	Once during 2017
Zinc	mg/kg	Once during 2017
Total Kjeldahl Nitrogen	mg/kg	Once during 2017
Ammonia (as N)	mg/kg	Once during 2017
Nitrate	mg/kg	Once during 2017
Total organic carbon	mg/kg	Once during 2017
Aromatic hydrocarbons	mg/kg	Once during 2017
Oil and grease	mg/kg	Once during 2017

[1] Sampling shall be performed such that data is available to support Discharger's application for renewal on August 1, 2018

2. The following procedures shall be carried out for sampling and analyzing ocean bottom sediments:

   a. The contractor shall locate and mark the mid-point of the outfall diffuser before beginning station locations and sampling. Reliance on charts, as built plans, etc., is not sufficient.

   b. A reference station has been selected in an area which should provide similar sediments at the same depth as monitoring locations REC-001 through REC-004. Any change in station location changes shall be reported with the laboratory results.

   c. Duplicate samples shall be taken at each fixed station and shall be analyzed and reported separately. Samples may be taken either by divers using non-contaminating samplers or by a surface operated grab sampler, which will obtain a undisturbed sediment sample. If the surface operated grab sampler is utilized, a subsample, uncontaminated by the sampler, should be taken from the grab.

   d. The top 5 centimeters (cm) of material from the grab samples shall be used for analyses. Enough cores shall be taken at each station to provide sufficient sediment material for the required duplicate analyses.

   e. Samples shall be stored immediately between 2 and 4°C onboard the ship and shall remain at that temperature until ready to be analyzed. The sulfide sample must be additionally preserved with 2 milliliters (ml) of zinc acetate. The complete preservation sequence and holding times for each analysis shall be described in the final report.

   f. In order to obtain an estimate of metal concentrations more representative of the biologically available fraction of metals, sediment metal concentrations shall be determined by a weak acid leachable extract (WAL). In this method, sediment samples are oven-dried (60°C for 24 hours), weighed and subjected to WAL extraction in 1 N HCl (GFS, redistilled) at ambient temperature for 24 hours (5 gram dry weight per 50 ml HCl). The leachate is centrifuged at 2,500 RPM for 15 minutes and the supernatant quantitatively diluted to final volume (100 ml). Results are then normalized to 100 um fraction and below. Sediment metal concentrations are expressed as µg metal normalized to gram salt-free dry weight. An alternate method (in lieu of WAL) for estimating the biologically available fraction of metals concentration may be requested in writing by the Discharger, and will be reviewed by the Executive Officer. If sufficient support is provided to indicate alternative method would yield comparative results to WAL, then the Executive Officer may approve the alternate method.

   g. The results of the monitoring shall be summarized and submitted in 2018 consistent with the schedule provided in Table E-7 for once-per-permit-term sampling. Sampling shall be performed such that data is available in time to

support Discharger's application for renewal on August 1, 2018. The results shall include a statistical analysis of the results compared to the monitoring results for Order No. R3-2007-0002 (previous Order). The statistical analysis shall indicate if any statistically significant changes have been identified in the sediment. Further, the report shall determine if the samples from monitoring locations REC-001 through REC-004 differ significantly statistically from that of the reference station (REC-005). The report shall include a complete discussion of the survey results and possible influence of the outfall on the ocean bottom sediment.

B. Receiving Water Characteristics Monitoring

1. Receiving water characteristic monitoring shall be conducted once during in the permit term in 2017 at monitoring locations REC-001 through REC-005:

Table E-6. Receiving Water Characteristic Monitoring

Determination	Units	Type of Sample
Salinity	Practical salinity units	Grab [1]
Temperature	°C	Grab [1]
Depth	Feet	Grab [1]

[1] At 1-meter intervals, surface to bottom.

2. Sampling and reporting of the receiving water characteristic monitoring shall be performed such that data is available in time to support Discharger's application for renewal on August 1, 2018.

C. Benthic Biota Monitoring

1. Benthic biota shall be monitored at monitoring locations REC-001 through REC-005 as follows:

   a. At least five benthic samples will be taken at each sediment monitoring station (REC-001 through REC-005). The samples shall be taken by mechanical grab or qualified diver biologists utilizing three-pound coffee cans or equivalent containers with both ends cut out. The cans are to be pushed into the sediment full length, the top capped, surrounding sediment dug away, and the bottom capped. Monitoring shall be conducted during the final year of the permit, and reported in sufficient time to support the Discharger's application for renewal.

   b. The sample shall be processed by washing it through a 1 mm sieve.

   c. The sample should then be preserved in 10 percent buffered formalin or 75 percent alcohol. The material may be stained with Rose Bengal.

   d. Coelenterates, polychaetes, mascrocrustaceans, mollusks, ectoprocts, echinoderms, and algae shall be identified to species or at least to genus. All others shall be identified to the lowest taxon possible. All specimens shall be

counted to provide information on abundance. Species abundance lists shall be presented with data reduced to standard area (square meter) and standard volume (liter).

e. For data from each sampling period, the following basic statistical analyses shall, as a minimum, be performed and reported:

   1) The mean, median, range, standard deviation, and 95 percent confidence limits of the species abundance data reduced to standard area and volume.

   2) Information theory species diversity index value for each replicate sample at each station and for the station as a whole (i.e., pooling data from all replicates for the station during one survey). In addition, the station mean, range, and standard deviation shall be calculated from the replicate index values.

f. The names and qualifications of persons identifying this material shall be indicated in all data reports. Further, type collections shall be established and verified by recognized experts for the various groups. All material shall be saved and stored for future reference. Material can be discharged after 4 years.

g. The final report on community analyses shall be submitted consistent with the schedule provided in Table E-7 for once-per-permit-term sampling such that data is available in time to support Discharger's application for renewal on August 1, 2018. The report shall include a complete discussion of survey results and possible influence of the outfall on the marine communities in the study area. The discussion should be based on statistical evidence developed in item e, above, and on similarity analysis and cluster analysis of natural community variation including the effects of different oceanic seasons and water temperatures, which could influence the validity of study results.

VII. Land Discharge Monitoring Requirements – Not Applicable

VIII. Reclamation Monitoring Requirements – Not Applicable

IX. Other Monitoring Requirements

A. Ocean Outfall Inspection

At least once per year (preferably in the same month, if possible, during the third quarter annually) the Discharger shall visually inspect the entire outfall and diffuser structure (e.g. divers, dye study) to note its structural integrity, excessive corrosion, and any cracks, breaks, leaks, plugged ports, or other actual or potential malfunctions. The outfall inspection will also check for possible external blockage of ports by sand and/or silt deposition. The Discharger shall report all finding and actions, including observed cracks, breaks, or malfunctions to the Executive Officer in the applicable annual report. The month for inspection specified by the Discharger shall be a month of good underwater visibility.

B. Raw Material Feed Monitoring

The volume of liquid hydrocarbons fed to the topping units shall be measured daily via a meter at Monitoring Location RAW-001, and reported monthly.

X. Reporting Requirements

A. General Monitoring and Reporting Requirements

1. The Discharger shall comply with all Standard Provisions (Attachment D) related to monitoring, reporting, and recordkeeping.

B. Self-Monitoring Reports (SMRs)

1. The Discharger shall submit electronic SMRs using the State Water Board's California Integrated Water Quality System (CIWQS) Program website (http://www.waterboards.ca.gov/water_issues/programs/ciwqs/). The CIWQS website will provide additional directions for SMR submittal in the event of a service interruption for electronic submittal. The Discharger shall use the current version of the Permittee Entry Template (PET) tool to configure data into the applicable CIWQS Data Format, and shall update that template according to this Order (e.g., add/delete parameters, revise limits, update monitoring locations, etc). Blank versions of the latest PET tool are available at http://www.waterboards.ca.gov/water_issues/programs/ciwqs/chc_npdes.shtml.

2. The Discharger shall report in the SMR the results for all monitoring specified in this MRP under sections III through X. The Discharger shall submit monthly, quarterly, semiannual, and annual SMRs including the results of all required monitoring using USEPA approved test methods or other test methods specified in this Order. If the Discharger monitors any pollutant more frequently than required by this Order, the results of this monitoring shall be included in the calculations and reporting of the data submitted in the SMR.

3. Sampling and monitoring as required by this MRP shall begin on the effective date of this Order. The Discharger shall complete all required monitoring and reporting according to the following schedule unless otherwise directed by the Executive Officer:

Table E-7. Monitoring Periods and Reporting Schedule

SMR Name	Permit Section for Monitoring & Sampling Data Included in Report	SMR Submittal Frequencies	SMR Due Date
NPDES Monitoring Report	MRP Section III (Influent), Section IV.A (Effluent), and Section IX.B (Raw Material Feed)	Monthly	First day of second calendar month following period of sampling

SMR Name	Permit Section for Monitoring & Sampling Data Included in Report	SMR Submittal Frequencies	SMR Due Date
NPDES Monitoring Report - BOD and TCDD	MRP Section IV (Effluent)	Quarterly	1st Quarter: May 1st 2nd Quarter: Aug 1st 3rd Quarter: Nov 1st 4th Quarter: Feb 1st
NPDES Monitoring Report - Various constituents	MRP Section IV Table E-3 (Effluent) and Section V (Chronic Toxicity)	Semi-annually	1st half: June 1st (following April sampling) 2nd half: December 1st (following October sampling)
Brine Discharge Monitoring Report	MRP Section IV.B (Brine)	Annually	February 1st following calendar year of sampling
Ocean Outfall Inspection Technical Report	MRP Section IX.A (Ocean Outfall Inspection)	Annually	February 1st following calendar year of inspection
Summary Report	Attachment D, Standard Provision VIII.D.8	Annually	February 1st following calendar year of sampling
NPDES Monitoring Report - Tributyltin	MRP Section IV.A Table E-3 (Effluent)	Once per permit	February 1, 2018, following sampling in calendar year 2017
NPDES Monitoring Report – Ocean Monitoring	MRP Section VI.A Table E-5 (Sediment), Section VI.B Table E-6 (Receiving Water Characteristics), and Section VI.C (Benthic Biota)	Once per permit	February 1, 2018, following sampling in calendar year 2017

4. **Reporting Protocols.** The Discharger shall report with each sample result the applicable reported Minimum Level (ML) and the current Method Detection Limit (MDL), as determined by the procedure in Part 136. For each numeric effluent limitation for a parameter identified in Table B of the Ocean Plan, the Discharger shall not use a ML greater than that specified in Appendix II of the Ocean Plan.

   The Discharger shall report the results of analytical determinations for the presence of chemical constituents in a sample using the following reporting protocols:

   a. Sample results greater than or equal to the reported ML shall be reported as measured by the laboratory (i.e., the measured chemical concentration in the sample).

b. Sample results less than the reported ML, but greater than or equal to the laboratory's MDL, shall be reported as "Detected, but Not Quantified," or DNQ. The estimated chemical concentration of the sample shall also be reported.

For the purposes of data collection, the laboratory shall write the estimated chemical concentration next to DNQ as well as the words "Estimated Concentration" (may be shortened to "Est. Conc."). The laboratory may, if such information is available, include numerical estimates of the data quality for the reported result. Numerical estimates of data quality may be percent accuracy (± a percentage of the reported value), numerical ranges (low to high), or any other means considered appropriate by the laboratory.

c. Sample results less than the laboratory's MDL shall be reported as "Not Detected," or ND.

d. Dischargers are to instruct laboratories to establish calibration standards so that the ML value (or its equivalent if there is differential treatment of samples relative to calibration standards) is the lowest calibration standard. At no time is the Discharger to use analytical data derived from extrapolation beyond the lowest point of the calibration curve.

5. **Compliance Determination.** Compliance with effluent limitations for priority pollutants shall be determined using sample reporting protocols defined above and Attachment A of this Order. For purposes of reporting and administrative enforcement by the Water Boards, the Discharger shall be deemed out of compliance with effluent limitations if the concentration of the priority pollutant in the monitoring sample is greater than the effluent limitation and greater than or equal to the reporting level (RL).

6. **Multiple Sample Data.** When determining compliance with an Average Monthly Effluent Limitation (AMEL), Average Weekly Effluent Limitation (AWEL), or Maximum Daily Effluent Limitation (MDEL) for priority pollutants and more than one sample result is available, the Discharger shall compute the arithmetic mean unless the data set contains one or more reported determinations of DNQ or ND. In those cases, the Discharger shall compute the median in place of the arithmetic mean in accordance with the following procedure:

a. The data set shall be ranked from low to high, ranking the reported ND determinations lowest, DNQ determinations next, followed by quantified values (if any). The order of the individual ND or DNQ determinations is unimportant.

b. The median value of the data set shall be determined. If the data set has an odd number of data points, then the median is the middle value. If the data set has an even number of data points, then the median is the average of the two values around the middle unless one or both of the points are ND or DNQ, in which case the median value shall be the lower of the two data points where DNQ is lower than a value and ND is lower than DNQ.

7. The Discharger shall submit SMRs in accordance with the following requirements:

a. The Discharger shall arrange all reported data in a tabular format. The data shall be summarized to clearly illustrate whether the facility is operating in compliance with interim and/or final effluent limitations. The Discharger is not required to duplicate the submittal of data that is already entered within CIWQS in a tabular format. When electronic submittal of data is required and CIWQS does not provide for entry into a tabular format within the system, the Discharger shall electronically submit the data in a tabular format as an attachment.

b. The Discharger shall include in their CIWQS upload a cover letter to the SMR. The information contained in the cover letter shall clearly identify violations of the WDRs; discuss corrective actions taken or planned; and the proposed time schedule for corrective actions. Identified violations must include a description of the requirement that was violated and a description of the violation. Uploaded reports must also include laboratory data sheets for the analytical results being presented.

C. Discharge Monitoring Reports (DMRs)

1. Similar to section XI.B.1 above, at any time during the term of this permit, the State or Central Coast Water Board may notify the Discharger to electronically submit SMRs that will satisfy federal requirements for submittal of Discharge Monitoring Reports (DMRs). Until such notification is given, the Discharger shall submit DMRs in accordance with the requirements described below.

2. DMRs must be signed and certified as required by the standard provisions (Attachment D). The Discharger shall submit the original DMR and one copy of the DMR to the address listed below:

STANDARD MAIL	FEDEX/UPS/ OTHER PRIVATE CARRIERS
State Water Resources Control Board Division of Water Quality c/o DMR Processing Center PO Box 100 Sacramento, CA 95812-1000	State Water Resources Control Board Division of Water Quality c/o DMR Processing Center 1001 I Street, 15th Floor Sacramento, CA 95814

3. All discharge monitoring results must be reported on the official USEPA pre-printed DMR forms (EPA Form 3320-1). Forms that are self-generated will not be accepted unless they follow the exact same format of EPA Form 3320-1.

D. Other Reports

1. The Discharger shall report the results of any special monitoring, TREs, or other data or information that results from the Special Provisions, section VI.C, of the

Order. The Discharger shall submit such reports with the first monthly SMR scheduled to be submitted on or immediately following the report due date.

ATTACHMENT F – FACT SHEET

Table of Contents

Attachment F – Fact Sheet F-3
I. Permit Information F-3
II. Facility Description F-4
A. Description of Wastewater F-4
B. Discharge Points and Receiving Waters F-5
C. Summary of Existing Requirements and Effluent Characterization F-5
D. Compliance Summary F-16
E. Planned Changes – Not Applicable F-16
III. Applicable Plans, Policies, and Regulations F-16
A. Legal Authorities F-17
B. California Environmental Quality Act (CEQA) F-17
C. State and Federal Regulations, Policies, and Plans F-17
D. Impaired Water Bodies on CWA 303(d) List F-19
E. Other Plans, Polices and Regulations – Not Applicable F-19
IV. Rationale For Effluent Limitations and Discharge Specifications F-19
A. Discharge Prohibitions F-20
B. Technology-Based Effluent Limitations F-20
1. Scope and Authority F-20
2. Applicable Technology-Based Effluent Limitations F-21
C. Water Quality-Based Effluent Limitations (WQBELs) F-24
1. Scope and Authority F-24
2. Applicable Beneficial Uses and Water Quality Criteria and Objectives F-24
3. Determining the Need for WQBELs F-24
4. WQBEL Calculations F-30
5. Whole Effluent Toxicity (WET) F-37
D. Final Effluent Limitations F-37
1. Satisfaction of Anti-Backsliding Requirements F-37
2. Satisfaction of Antidegradation Policy F-38
3. Stringency of Requirements for Individual Pollutants F-38
4. Summary of Final Effluent Limitations – Discharge Point No. 001 ..... F-38
E. Interim Effluent Limitations – Not Applicable F-39
F. Land Discharge Effluent Limitations and Specifications F-39
G. Reclamation Specifications – Not Applicable F-39
V. Rationale for Receiving Water Limitations F-39
A. Surface Water F-39
B. Groundwater – Not Applicable F-39
VI. Rationale for Monitoring and Reporting Requirements F-39
A. Influent Monitoring Requirements F-39
B. Effluent Monitoring Requirements F-39
C. Whole Effluent Toxicity Testing Requirements F-40
E. Land Discharge Monitoring Requirements – Not Applicable F-40
F. Reclamation Monitoring Requirements – Not Applicable F-40
G. Receiving Water Monitoring Requirements F-40
H. Other Monitoring Requirements F-41
VII. Rationale for Provisions F-41
A. Standard Provisions F-41
B. Special Provisions F-41
1. Reopener Provisions F-41

2. Special Studies and Additional Monitoring Requirements F-42
3. Best Management Practices and Pollution Prevention F-42
4. Construction, Operation, and Maintenance Specifications – Not Applicable F-43
5. Special Provisions for Municipal Facilities (POTWs Only) – Not Applicable F-43
6. Other Special Provisions – Not Applicable F-43
7. Compliance Schedules – Not Applicable F-43
VIII. Public Participation F-43
A. Notification of Interested Parties F-43
B. Written Comments F-43
C. Public Hearing F-43
D. Waste Discharge Requirements Petitions F-44
E. Information and Copying F-44
F. Register of Interested Persons F-44
G. Additional Information F-44

List of Tables

Table F-1. Facility Information F-3
Table F-2. Facility Wastewaters F-4
Table F-3. Historic Effluent Limitations and Monitoring Data, Major Constituents and Properties of Wastewater, Discharge Point No. 001 ..... F-6
Table F-4.a. Historic Effluent Limitations and Monitoring Data, Protection of Marine Aquatic Life, Discharge Point No. 001 When Flow is Equal to or Less Than 0.285 MGD F-6
Table F-4.b. Historic Effluent Limitations and Monitoring Data, Protection of Marine Aquatic Life, Discharge Point No. 001 When Flow is Greater Than 0.285 MGD F-8
Table F-5.a. Historic Effluent Limitations and Monitoring Data, Protection of Human Health – Non-Carcinogens, Discharge Point No. 001 When Flow is Equal to or Less Than 0.285 MGD F-9
Table F-5.b. Historic Effluent Limitations and Monitoring Data, Protection of Human Health – Non-Carcinogens, Discharge Point No. 001 When Flow is Greater Than 0.285 MGD F-10
Table F-6.a. Historic Effluent Limitations and Monitoring Data, Protection of Human Health – Carcinogens, Discharge Point No. 001, When Flow is Equal to or Less Than 0.285 MGD. F-12
Table F-6.b. Historic Effluent Limitations and Monitoring Data, Protection of Human Health – Carcinogens, Discharge Point No. 001, When Flow is Greater Than 0.285 MGD. F-14
Table F-7. Basin Plan Beneficial Uses F-17
Table F-8. Ocean Plan Beneficial Uses F-18
Table F-9. Reported Production Level F-22
Table F-10. Summary of Technology-based Effluent Limitations F-22
Table F-11. Storm Runoff Credits F-23
Table F-12. RPA Results F-27
Table F-13. Pollutants Having Background Concentrations F-31
Table F-14.a. Effluent Limitations, Protection of Marine Aquatic Life, Discharge Point No. 001 When Effluent Flow is Equal to or Less Than 0.285 MGD F-31
Table F-14.b. Effluent Limitations, Protection of Marine Aquatic Life, Discharge Point No. 001 When Effluent Flow is Greater Than 0.285 MGD F-32
Table F-14.c. Effluent Limitations, Protection of Human Health – Non-Carcinogens, Discharge Point No. 001 ..... F-34
Table F-14.d. Effluent Limitations, Protection of Human Health – Carcinogens, Discharge Point No. 001 ..... F-35

Attachment F – Fact Sheet

As described in section II of the Order, this Fact Sheet includes the legal requirements and technical rationale that serve as the basis for the requirements of this Order.

This Order has been prepared under a standardized format to accommodate a broad range of discharge requirements for dischargers in California. Only those sections or subsections of this Order that are specifically identified as "not applicable" have been determined not to apply to this Discharger. Sections or subsections of this Order not specifically identified as "not applicable" are fully applicable to this Discharger.

I. Permit Information

The following table summarizes administrative information related to the Facility.

Table F-1. Facility Information

WDID	3 402006002
Discharger	Phillips 66 Company
Name of Facility	Santa Maria Refinery
Facility Address	2555 Willow Road
	Arroyo Grande, CA 93420
	San Louis Obispo County
Facility Contact, Title and Phone	Kristen M. Kopp, Superintendent Health, Safety and Environment, (805) 343-3241
Authorized Person to Sign and Submit Reports	Kristen M. Kopp, Supervisor Health, Safety and Environment, (805) 343-3241
Mailing Address	Same as Facility Address
Billing Address	Same as Facility Address
Type of Facility	Petroleum Refining (SIC Code No. 2911)
Major or Minor Facility	Major
Threat to Water Quality	2
Complexity	A
Pretreatment Program	NA
Reclamation Requirements	NA
Facility Permitted Flow	0.575 million gallons per day (MGD) dry weather
Facility Design Flow	0.575 MGD
Watershed	Arroyo Grande
Receiving Waters	Pacific Ocean
Receiving Water Type	Ocean Waters

A. The Phillips 66 Company (hereinafter Discharger) is the owner and operator of the Santa Maria Refinery (hereinafter Facility), a petroleum refining facility.

For the purposes of this Order, references to the "Discharger" or "Permittee" in applicable federal and state laws, regulations, plans, or policy are held to be equivalent to references to the Discharger herein.

B. The Facility discharges treated wastewater to the Pacific Ocean, a water of the United States, and is currently regulated by Order R3-2007-0002, and National Pollutant Discharge Elimination System (NPDES) Permit No. CA0000051, which was adopted on September 7, 2007 and expires on March 7, 2012. The terms and conditions of the current Order will be automatically continued and remain in effect until new Waste Discharge Requirements (WDRs) and a NPDES permit are adopted pursuant to this Order.

C. The Discharger filed a Report of Waste Discharge (ROWD) and submitted an application for renewal of its WDRs and NPDES permit on March 6, 2012. Additional information was requested and received on April 3, 2012.

II. Facility Description

The Discharger owns and operates the Santa Maria Refinery, a petroleum refinery with the primary function of converting heavy high sulfur domestic California crude oil into high quality feedstock products which are sent by pipeline to a San Francisco area refinery for finishing. The products include gas, oil, naphtha, and fuel gas. The Facility's refining process also produces petroleum coke and elemental sulfur as by-products. Adjacent to the refinery, a Carbon Plant operates a petroleum coke plant. Products from this plant include green coke and pelletized sulfur. Discharges from the Carbon Plant are regulated independently of this permit.

The Facility operates 24 hours per day, 365 days a year, with the exception of maintenance shutdowns. The Facility has a reported long-term average rate capacity of 44,400 barrels per day.

A. Description of Wastewater

In the ROWD, the Discharger reported the following wastewaters are typically discharged from the Facility during dry weather.

Table F-2. Facility Wastewaters

Source	Typical volume, gallons per minute (gallons per day)
Source water treatment (filter backwash, zeolite softener regeneration, and reverse osmosis reject brine)	100 (144,000)
Lab and shop drains	1 (1,440)
Boiler blowdown	8 (11,520)
Steam condensate	47 (67,680)
Storm surface collection drains	115 (165,600)
Storm surface collection sump	<1 (<1,440)
Washdown water for all units	90 (129,600)
Carbon plant sources	<1 (<1,440)
Sulfur pile runoff	4 (5,760)
Cooling tower bleed off	50 (72,000)
Remediation water from off-site underground storage tanks	<1 (<1,440)
Coke cooling and cutting purge water	13 (18,720)
Crude storage tank drainage	<0.1 (<144)

Source	Typical volume, gallons per minute (gallons per day)
Sulfur complex sulfinol/modified stretford solution	<1 (<1,440)
Process water from vacuum, crude and coker distillation processes	128 (184,320)
Remediation water from off-site wells	<1 (<1,440)

All wastewaters except raw water treatment byproducts (filter backwash, zeolite softener regeneration, and reverse osmosis reject brine), are treated prior to discharge. The raw water treatment byproducts may be directed to the Facility's treatment system, or discharged directly to the outfall sump.

Oily wastewaters are collected in an oily water collection system and directed to an American Petroleum Institute (API) oil/water separator. Other process waters and API separator effluent are then directed to the Facility's main treatment plant, which consists of two surge tanks, dissolved air flotation, a trickling filter, an Orbal aeration system, and a secondary clarifier. Sludge generated during the treatment processes is recycled at the coking facility.

The Facility maintains two separate storm water collection systems for contact and non-contact storm water. Precipitation runoff from the oil storage tank dikes and operating units are collected in the oily water collection system with process water and directed to the API separator for treatment, as described above. Non-contact storm water from streets and unimproved areas, not subject to oil spills, is collected in a non-contact storm water sewer system and flows by gravity to an evaporation pond. This non-contact storm water is not discharged to the receiving water.

Average effluent flows from the Facility averaged approximately 0.416 MGD and 0.422 MGD over the years 2010 and 2011, respectively. Approximately 0.12 to 0.13 MGD of the total effluent flows consisted of reverse osmosis reject water.

Attachment B provides a map of the area around the Facility. Attachment C provides a Facility flow schematic.

B. Discharge Points and Receiving Waters

Wastewater is discharged from Discharge Point No. 001 through an approximately 27 foot deep 1,700-foot long outfall and diffuser system to the Pacific Ocean, a water of the United States. The outfall terminates at latitude 35° 02' 37" N and longitude 120° 38' 21" W. The minimum initial dilution ratio (seawater:effluent) of the outfall is 83:1 at a flowrate of 0.285 MGD, and 68:1 at a flow rate of 0.575 MGD.

C. Summary of Existing Requirements and Effluent Characterization

Effluent limitations contained in the existing Order for discharges from Discharge Point No. 001 and representative monitoring data for Monitoring Location EFF-001, for the term of the existing Order, are presented in the following tables.

Table F-3. Historic Effluent Limitations and Monitoring Data, Major Technology-based Effluent Limitations, Discharge Point No. 001

Parameter[1]	Units	Effluent Limitation			Monitoring Data (Oct 2007 through Oct 2011)
		Average Monthly	Average Weekly	Maximum Daily	Highest Daily Discharge
Biochemical Oxygen Demand (BOD_5) (5-day @20 Deg. C)	lbs/day	204	--	367	87
Total Suspended Solids (TSS)	lbs/day	163	--	256	191
Chemical Oxygen Demand (COD)	lbs/day	1,430	--	2,750	1,822
Oil and Grease	lbs/day	59.4	--	111	85
Phenolic Compounds	lbs/day	1.06	--	2.7	0.21
Ammonia (as N)	lbs/day	220	--	290	25.9
Sulfide	lbs/day	1.08	--	2.41	<0.35
Total Chromium	lbs/day	1.26	--	3.60	[2]
Hexavalent Chromium	lbs/day	0.102	--	0.230	0.011[3]
pH	s.u.	6.0-9.0			8.2

[1] Storm Runoff Credits to be applied based on storm water runoff commingled with process wastewater and treated in the main treatment system:
BOD5 (lbs/1,000gallons): Monthly Average=0.22; Daily Maximum=0.40
TSS (lbs/1,000gallons): Monthly Average=0.18; Daily Maximum=0.28
COD (lbs/1,000gallons): Monthly Average=1.5; Daily Maximum=3.0
Oil and Grease (lbs/1,000gallons): Monthly Average=0.067; Daily Maximum=0.13
Phenolic Compounds (lbs/1,000gallons): Monthly Average=0.0014; Daily Maximum=0.0029
Total Chromium (lbs/1,000gallons): Monthly Average=0.0018; Daily Maximum=0.0050
Hexavalent Chromium (lbs/1,000gallons): Monthly Average=0.00023; Daily Maximum=0.00052

[2] Monitoring for hexavalent chromium was established in place of total chromium. No data for total chromium was reported.

[3] Value was detected, but not quantifiable.

Table F-4.a. Historic Effluent Limitations and Monitoring Data, Protection of Marine Aquatic Life, Discharge Point No. 001 When Flow is Equal to or Less Than 0.285 MGD

Parameter	Units	Effluent Limitation			Monitoring Data (Oct 2007 through Oct 2011)
		6-Month Median[1]	Daily Maximum[2]	Instantaneous Maximum[3]	Highest Daily Discharge[4]
Arsenic	mg/L	0.42	2.44	6.47	NA
	lbs/day	1.00	5.80	15.38	NA
Cadmium	mg/L	0.08	0.34	0.84	NA
	lbs/day	0.19	0.81	2.00	NA
Nickel	mg/L	0.42	1.68	4.20	NA
	lbs/day	1.00	4.00	9.98	NA
Selenium	mg/L	1.26	5.04	12.60	NA
	lbs/day	2.99	11.98	29.95	NA
Silver	mg/L	0.06	0.22	0.57	NA

Parameter	Units	Effluent Limitation			Monitoring Data (Oct 2007 through Oct 2011)
		6-Month Median[1]	Daily Maximum[2]	Instantaneous Maximum[3]	Highest Daily Discharge[4]
	lbs/day	0.14	0.52	1.35	NA
Total Chlorine Residual [5]	mg/L	0.17	0.67	5.04	NA
	lbs/day	0.40	1.59	11.98	NA
Phenolic Compounds (non-chlorinated)	mg/L	2.52	10.08	25.20	NA
	lbs/day	5.99	23.96	59.90	NA
Chlorinated Phenolics	mg/L	0.08	0.34	0.84	NA
	lbs/day	0.19	0.81	2.00	NA
Endosulfan[6]	µg/L	0.76	1.51	2.27	NA
	lbs/day	1.81	3.59	5.40	NA
Endrin	µg/L	0.17	0.34	0.50	NA
	lbs/day	0.40	0.81	1.19	NA
HCH[7]	µg/L	0.34	0.67	1.01	NA
	lbs/day	0.81	1.59	2.40	NA
Chronic Toxicity	TUc	--	84	--	NA
Radioactivity	[8]				NA

NA = Not Available

[1] All reported flows were greater than 0.285 MGD.

[2] The 6-month median shall apply as a moving median of daily values for any 180-day period in which daily values represent flow weighted average concentrations within a 24-hour period. For intermittent discharges, the daily value shall be considered equal to zero for days in which no discharge occurred. The 6-month median limit on daily mass emissions shall be determined using the 6-month median effluent concentration Ce and the observed flow rate, Q, in MGD.

[3] The daily maximum shall apply to flow weighted 24-hour composite samples. The daily maximum mass emission shall be determined using the daily maximum effluent concentration limit as Ce and the observed flow rate, Q, in MGD.

[4] The instantaneous maximum shall apply to grab sample determinations.

[5] Water quality objectives for total chlorine residual applying to intermittent discharges not exceeding two hours shall be determined using the following equation:

$$\log(y) = -0.43 (\log x) + 1.8$$

where: y = the water quality objective (in µg/L) to apply when chlorine is being discharged
x = the duration of uninterrupted chlorine discharges in minutes

The applicable effluent limitation must then be determined using Equation No. 1 from the Ocean Plan.

[6] Shall mean the sum of endosulfan-alpha and –beta and endosulfan sulfate.

[7] Shall mean the sum of the alpha, beta, gamma and delta isomers of hexachlorocyclohexane.

[8] Radioactivity is not to exceed limits specified in Title 17, Division 1, Chapter 5, Subchapter 4, Group 3, Article 3, Section 30269 of the California Code of Regulations.

Table F-4.b. Historic Effluent Limitations and Monitoring Data, Protection of Marine Aquatic Life, Discharge Point No. 001 When Flow is Greater Than 0.285 MGD

Parameter	Units	Effluent Limitations			Monitoring Data (Oct 2007 through Oct 2011)
		6-Month Median[1]	Daily Maximum[2]	Instantaneous Maximum[3]	Highest Daily Discharge
Arsenic	mg/L	0.35	2.00	5.32	0.017
	lbs/day	1.68	9.59	25.51	NA
Cadmium	mg/L	0.07	0.28	0.69	<0.0035
	lbs/day	0.34	1.34	3.31	NA
Chromium (VI) [4] [5]	mg/L	--	--	--	0.0060
	lbs/day	--	--	--	NA
Copper	mg/L	--	--	--	0.015
	lbs/day	--	--	--	NA
Lead	mg/L	--	--	--	0.00052
	lbs/day	--	--	--	NA
Mercury	µg/L	--	--	--	0.22
	lbs/day	--	--	--	NA
Nickel	mg/L	0.35	1.38	3.45	0.0092
	lbs/day	1.68	6.62	16.54	NA
Selenium	mg/L	1.04	4.14	10.35	0.55
	lbs/day	4.99	19.85	49.63	NA
Silver	mg/L	0.05	0.18	0.47	<0.0030
	lbs/day	.024	0.86	2.25	NA
Zinc	mg/L	--	--	--	0.19
	lbs/day	--	--	--	NA
Cyanide	mg/L	--	--	--	0.043
	lbs/day	--	--	--	NA
Total Chlorine Residual [6]	mg/L	0.14	0.55	4.14	<0.10
	lbs/day	0.67	2.64	19.85	NA
Ammonia (as N)	mg/L	--	--	--	7.3
	lbs/day	--	--	--	NA
Phenolic Compounds (non-chlorinated)	mg/L	2.07	8.28	20.70	<0.080
	lbs/day	9.93	39.71	99.27	NA
Chlorinated Phenolics	mg/L	0.07	0.28	0.69	<0.040
	lbs/day	0.34	1.34	3.31	NA
Endosulfan[7]	µg/L	0.62	1.24	1.86	NA
	lbs/day	2.97	5.95	8.92	NA
Endrin	µg/L	0.14	0.28	0.41	NA
	lbs/day	0.67	1.34	1.97	NA
HCH[8]	µg/L	0.28	0.55	0.83	NA
	lbs/day	1.34	2.64	3.98	NA
Chronic Toxicity	TUc	--	69	--	178.6
Radioactivity	[9]				NA

Parameter	Units	Effluent Limitations			Monitoring Data (Oct 2007 through Oct 2011)
		6-Month Median[1]	Daily Maximum[2]	Instantaneous Maximum[3]	

NA = Not Available

[1] The 6-month median shall apply as a moving median of daily values for any 180-day period in which daily values represent flow weighted average concentrations within a 24-hour period. For intermittent discharges, the daily value shall be considered equal to zero for days in which no discharge occurred. The 6-month median limit on daily mass emissions shall be determined using the 6-month median effluent concentration Ce and the observed flow rate, Q, in MGD.

[2] The daily maximum shall apply to flow weighted 24-hour composite samples. The daily maximum mass emission shall be determined using the daily maximum effluent concentration limit as Ce and the observed flow rate, Q, in MGD.

[3] The instantaneous maximum shall apply to grab sample determinations.

[4] The Discharger may, at their option, meet this limitation as a total chromium limitation.

[5] Reported as total chromium.

[6] Water quality objectives for total chlorine residual applying to intermittent discharges not exceeding two hours shall be determined using the following equation:

$$\log(y) = -0.43 (\log x) + 1.8$$

where: y = the water quality objective (in µg/L) to apply when chlorine is being discharged

x = the duration of uninterrupted chlorine discharges in minutes

The applicable effluent limitation must then be determined using Equation No. 1 from the Ocean Plan.

[7] Shall mean the sum of endosulfan-alpha and –beta and endosulfan sulfate.

[8] Shall mean the sum of the alpha, beta, gamma and delta isomers of hexachlorocyclohexane.

[9] Radioactivity is not to exceed limits specified in Title 17, Division 1, Chapter 5, Subchapter 4, Group 3, Article 3, Section 30269 of the California Code of Regulations.

Table F-5.a. Historic Effluent Limitations and Monitoring Data, Protection of Human Health – Non-Carcinogens, Discharge Point No. 001 When Flow is Equal to or Less Than 0.285 MGD

Parameter	Units	Average Monthly Effluent Limitation	Monitoring Data (Oct 2007 through Oct 2011)
			Highest Reported Value[1]
Acrolein	mg/L	18.48	NA
	lbs/day	43.92	NA
Bis(2-Chloroethoxy)Methane	mg/L	0.3696	NA
	lbs/day	88.6	NA
Bis(2-Chloroisopropyl)Ether	mg/L	100.8	NA
	lbs/day	8,926.5	NA
Chlorobenzene	mg/L	47.88	NA
	lbs/day	113.8	NA
Chromium (III)	g/L	15.96	NA
	lbs/day	37,935	NA
Di-n-butyl Phthalate	mg/L	294	NA
	lbs/day	698.8	NA
Dichlorobenzenes[2]	mg/L	428.4	NA
	lbs/day	1,018.3	NA
1,1-Dichloroethylene	mg/L	0.0756	NA

Parameter	Units	Average Monthly Effluent Limitation	Monitoring Data (Oct 2007 through Oct 2011) Highest Reported Value[1]
	lbs/day	0.2	NA
Diethyl Phthalate	mg/L	2,772	NA
	lbs/day	6,588.8	NA
Dimethyl Phthalate	g/L	68.88	NA
	lbs/day	163,720.9	NA
4,6-Dinitro-2-Methylphenol	mg/L	18.48	NA
	lbs/day	43.92	NA
2,4-Dinitrophenol	mg/L	0.336	NA
	lbs/day	8.0	NA
Ethylbenzene	mg/L	344.4	NA
	lbs/day	818.6	NA
Fluoranthene	mg/L	1.26	NA
	lbs/day	3.0	NA
Hexachlorocyclopentadiene	mg/L	4.872	NA
	lbs/day	11.6	NA
Isophorone	g/L	0.06132	NA
	lbs/day	145.7	NA
Nitrobenzene	mg/L	0.4116	NA
	lbs/day	1.0	NA
Thallium	mg/L	0.168	NA
	lbs/day	0.4	NA
Toluene	g/L	7.14	NA
	lbs/day	16,971.1	NA
1,1,2,2-Tetrachloroethane	mg/L	0.1932	NA
	lbs/day	0.5	NA
Tributyltin	ug/L	0.1176	NA
	lbs/day	0.0003	NA
1,1,1-Trichloroethane	g/L	45.36	NA
	lbs/day	107,816.2	NA
1,1,2-Trichloroethane	mg/L	0.7896	NA
	lbs/day	1.9	NA

NA = Not Available
[1] All reported flows were greater than 0.285 MGD.
[2] The sum of 1,2- and 1,3-dichlorobenzene.

Table F-5.b. Historic Effluent Limitations and Monitoring Data, Protection of Human Health – Non-Carcinogens, Discharge Point No. 001 When Flow is Greater Than 0.285 MGD

Parameter	Units	30-day Average	Monitoring Data (Oct 2007 through Oct 2011) Highest Reported Value

Parameter	Units	30-day Average	Monitoring Data (Oct 2007 through Oct 2011) Highest Reported Value
Acrolein	mg/L	15.18	<0.0079
	lbs/day	72.79	NA
Antimony	mg/L	--	<0.034
	lbs/day	--	NA
Bis(2-Chloroethoxy)Methane	mg/L	0.304	<0.016
	lbs/day	1.5	NA
Bis(2-Chloroisopropyl)Ether	mg/l	82.800	<0.015
	lbs/day	397.1	NA
Chlorobenzene	mg/L	39.330	<0.00011
	lbs/day	188.6	NA
Chromium (III)	g/L	13.110	<0.0000050
	lbs/day	62,869.0	NA
Di-n-butyl Phthalate	mg/L	241.500	<0.0074
	lbs/day	1,158.1	NA
Dichlorobenzenes [1]	mg/L	351.900	<0.00014
	lbs/day	1,687.5	NA
1,1-Dichloroethylene	mg/L	0.062	<0.00012
	lbs/day	0.3	NA
Diethyl Phthalate	mg/L	2,277.00	<0.016
	lbs/day	10,919.3	NA
Dimethyl Phthalate	g/L	56.580	<0.000020
	lbs/day	271,329.4	NA
4,6-Dinitro-2-Methylphenol	mg/L	15.180	<0.025
	lbs/day	72.8	NA
2,4-Dinitrophenol	mg/L	0.276	<0.024
	lbs/day	13.2	NA
Ethylbenzene	mg/L	282.900	<0.00013
	lbs/day	1,356.6	NA
Fluoranthene	mg/L	1.035	<0.010
	lbs/day	5.0	NA
Hexachlorocyclopentadiene	mg/L	4.002	<0.015
	lbs/day	19.2	NA
Isophorone	g/L	0.050	<0.0000051
	lbs/day	241.5	NA
Nitrobenzene	mg/L	0.338	<0.013
	lbs/day	1.6	NA
Thallium	mg/L	0.138	<0.00011
	lbs/day	0.7	NA
Toluene	g/L	5.865	<0.00000012
	lbs/day	28,125.6	NA
1,1,2,2-Tetrachloroethane	mg/L	0.159	<0.00031
	lbs/day	0.8	NA
Tributyltin	ug/L	0.097	<0.030

Parameter	Units	30-day Average	Monitoring Data (Oct 2007 through Oct 2011) Highest Reported Value
	lbs/day	0.0004	NA
1,1,1-Trichloroethane	g/L	37.260	<0.00000011
	lbs/day	178,680.3	NA
1,1,2-Trichloroethane	mg/L	0.649	<0.00021
	lbs/day	3.1	NA

NA = Not Available
[1] The sum of 1,2- and 1,3-dichlorobenzene.

Table F-6.a. Historic Effluent Limitations and Monitoring Data, Protection of Human Health – Carcinogens, Discharge Point No. 001, When Flow is Equal to or Less Than 0.285 MGD.

Parameter	Units	Average Monthly Effluent Limitation	Monitoring Date (Oct 2007 through Oct 2011) Highest Reported Value[1]
Acrylonitrile	µg/L	8.4	NA
	lbs/day	0.02	NA
Aldrin	ng/L	1.848	NA
	lbs/day	4.4×10^{-6}	NA
Benzene	µg/L	495.6	NA
	lbs/day	1.2	NA
Benzidine	µg/L	0.005796	NA
	lbs/day	1.4×10^{-5}	NA
Beryllium	µg/L	2.772	NA
	lbs/day	0.007	NA
Bis(2-Chloroethyl)Ether	µg/L	3.78	NA
	lbs/day	0.009	NA
Bis(2-Ethylhexyl)Phthalate	µg/L	294	NA
	lbs/day	0.7	NA
Carbon Tetrachloride	µg/L	75.6	NA
	lbs/day	0.2	NA
Chlordane[2]	ng/L	1.932	NA
	lbs/day	4.5×10^{-6}	NA
Chlorodibromomethane	µg/L	722.4	NA
	lbs/day	1.7	NA
Chloroform	µg/L	10,920	NA
	lbs/day	26.0	NA
DDT[3]	ng/L	14.28	NA
	lbs/day	3×10^{-5}	NA
1,4-Dichlorobenzene	µg/L	1,512	NA
	lbs/day	3.6	NA
3,3'-Dichlorobenzidine	µg/L	0.6804	NA

Parameter	Units	Average Monthly Effluent Limitation	Monitoring Date (Oct 2007 through Oct 2011) Highest Reported Value[1]
	lbs/day	0.002	NA
1,2-Dichloroethane	mg/L	2.352	NA
	lbs/day	5.6	NA
Dichlorobromomethane	mg/L	0.5208	NA
	lbs/day	1.2	NA
Dichloromethane	mg/L	37.8	NA
	lbs/day	89.8	NA
1,3-Dichloropropene	mg/L	0.7476	NA
	lbs/day	1.8	NA
Dieldrin	ng/L	3.36	NA
	lbs/day	7.9×10^{-6}	NA
2,4-Dinitrotoluene	µg/L	218.4	NA
	lbs/day	0.5	NA
1,2-Diphenylhydrazine	µg/L	13.44	NA
	lbs/day	0.03	NA
Halomethanes[4]	mg/L	10.92	NA
	lbs/day	26.0	NA
Heptachlor	µg/L	0.0042	NA
	lbs/day	10.0×10^{-6}	NA
Heptachlor Epoxide	µg/L	0.00168	NA
	lbs/day	4.0×10^{-8}	NA
Hexachlorobenzene	ng/L	17.64	NA
	lbs/day	4.2×10^{-5}	NA
Hexachlorobutadiene	µg/L	1,176	NA
	lbs/day	2.8	NA
Hexachloroethane	µg/L	210	NA
	lbs/day	0.5	NA
N-Nitrosodimethylamine	µg/L	613.2	NA
	lbs/day	1.5	NA
N-Nitrosodi-N-propylamine	µg/L	31.92	NA
	lbs/day	0.08	NA
N-Nitrosodiphenylamine	µg/L	210	NA
	lbs/day	0.5	NA
PAHs[5]	µg/L	0.7392	NA
	lbs/day	0.002	NA
PCBs [6]	ng/L	1.596	NA
	lbs/day	3.8×10^{-6}	NA
TCDD Equivalents [7]	ρg/L	0.3276	NA
	lbs/day	7.8×10^{-10}	NA
Tetrachloroethylene	mg/L	0.168	NA
	lbs/day	0.4	NA
Toxaphene	ng/L	17.64	NA
	lbs/day	4.2×10^{-5}	NA

Parameter	Units	Average Monthly Effluent Limitation	Monitoring Date (Oct 2007 through Oct 2011) Highest Reported Value[1]
Trichloroethylene	µg/L	2,268	NA
	lbs/day	5.4	NA
2,4,6-Trichlorophenol	µg/L	24.4	NA
	lbs/day	0.06	NA
Vinyl Chloride	µg/L	3,024	NA
	lbs/day	7.2	NA

NA = Not Available

[1] All reported flows were greater than 0.285 MGD.

[2] Chlordane shall mean the sum of chlordane-alpha, chlordane-gamma, chlordene-alpha, chlordene-gamma, nonachlor-alpha, nonachlor-gamma, and oxychlordane.

[3] DDT shall mean the sum of 4,4'-DDT; 2,4'-DDT; 4,4'-DDE; 2,4'-DDE; 4,4'-DDD; and 2,4'-DDD.

[4] Halomethanes shall mean the sum of bromoform, bromomethane (methyl bromide), chloromethane (methyl chloride), chlorodibromomethane, and dichlorobromomethane.

[5] PAHS (Polynuclear aromatic hydrocarbons) shall mean the sum of acenaphthylene, anthracene, 1,2-benzanthracene; 3,4-benzofluoranthene; benzo(k)fluoranthene; 1,12-benzoperylene; benzo(a)pyrene; chrysene; dibenzo(a,h)anthracene; fluorene; indeno(1,2,3-cd)pyrene; phenanthrene; and pyrene.

[6] PCBs (polychlorinated biphenyls) shall mean the sum of chlorinated biphenyls whose analytical characteristics resemble those of Aroclor-1016, Aroclor-1221, Aroclor-1232, Aroclor-1242, Aroclor-1248, Aroclor-1254, and Aroclor-1260.

[7] TCDD Equivalents shall mean the sum of those concentrations of chlorinated dibenzodioxins (2,3,7,8-CDDs) and chlorinated dibenzofurans (2,3,7,8-CDFs) multiplied by their respective toxicity factors, as listed in Appendix I of the Ocean Plan.

Table F-6.b. Historic Effluent Limitations and Monitoring Data, Protection of Human Health – Carcinogens, Discharge Point No. 001, When Flow is Greater Than 0.285 MGD.

Parameter	Units	Average Monthly Effluent Limitation	Monitoring Date (Oct 2007 through Oct 2011) Highest Reported Value
Acrylonitrile	µg/L	6.900	<2.0
	lbs/day	0.03	NA
Aldrin	ng/L	1.518	NA
	lbs/day	7.3×10^{-6}	NA
Benzene	µg/L	407.100	<0.12
	lbs/day	1.9	NA
Benzidine	µg/L	0.005	<360
	lbs/day	2.3×10^{-6}	NA
Beryllium	µg/L	2.277	<0.22
	lbs/day	0.01	NA
Bis(2-Chloroethyl)Ether	µg/L	3.105	<34
	lbs/day	0.01	NA
Bis(2-Ethylhexyl)Phthalate	µg/L	241.500	<150
	lbs/day	1.2	NA
Carbon Tetrachloride	µg/L	62.100	<0.12
	lbs/day	0.3	NA

Parameter	Units	Average Monthly Effluent Limitation	Monitoring Date (Oct 2007 through Oct 2011)
Chlordane[1]	ng/L	1.587	NA
	lbs/day	7.6×10^{-6}	NA
Chlorodibromomethane	µg/L	593.4	<0.13
	lbs/day	2.8	NA
Chloroform	µg/L	8,970.000	<0.12
	lbs/day	43.0	NA
DDT [2]	ng/L	11.730	NA
	lbs/day	5.6×10^{-5}	NA
1,4-Dichlorobenzene	µg/L	1,242.000	<0.12
	lbs/day	5.9	NA
3,3'-Dichlorobenzidine	µg/L	0.559	<410
	lbs/day	0.003	NA
1,2-Dichloroethane	mg/L	1.932	<0.00014
	lbs/day	9.3	NA
Dichlorobromomethane	mg/L	0.428	<0.00024
	lbs/day	2.0	NA
Dichloromethane	mg/L	31.050	<0.00050
	lbs/day	148.9	NA
1,3-Dichloropropene	mg/L	0.614	<0.00011
	lbs/day	2.9	NA
Dieldrin	ng/L	2.760	NA
	lbs/day	1.3×10^{-6}	NA
2,4-Dinitrotoluene	µg/L	179.400	<13
	lbs/day	0.9	NA
1,2-Diphenylhydrazine	µg/L	11.040	<17
	lbs/day	0.05	NA
Halomethanes[3]	mg/L	8.970	<0.00031
	lbs/day	43.0	NA
Heptachlor	µg/L	0.003	NA
	lbs/day	1.6×10^{-5}	NA
Heptachlor Epoxide	µg/L	0.001	NA
	lbs/day	6.6×10^{-5}	NA
Hexachlorobenzene	ng/L	14.490	<10,000
	lbs/day	6.9×10^{-5}	NA
Hexachlorobutadiene	µg/L	966.00	<12
	lbs/day	4.6	NA
Hexachloroethane	µg/L	172.500	<16
	lbs/day	0.8	NA
N-Nitrosodimethylamine	µg/L	503.700	<30
	lbs/day	2.4	NA
N-nitrosodi-N-propylamine	µg/L	26.220	<65
	lbs/day	0.1	NA
N-Nitrosodiphenylamine	µg/L	172.500	<22
	lbs/day	0.8	NA
PAHs[4]	µg/L	0.607	<32

Parameter	Units	Average Monthly Effluent Limitation	Monitoring Date (Oct 2007 through Oct 2011)
	lbs/day	0.003	NA
PCBs [5]	ng/L	1.311	NA
	lbs/day	6.3×10^{-6}	NA
TCDD Equivalents [6]	pg/L	0.269	0.63221
	lbs/day	1.3×10^{-9}	NA
Tetrachloroethylene	mg/L	0.138	<0.00011
	lbs/day	0.7	NA
Toxaphene	ng/L	14.490	NA
	lbs/day	6.9×10^{-5}	NA
Trichloroethylene	µg/L	1,863.000	<0.15
	lbs/day	8.9	NA
2,4,6-Trichlorophenol	µg/L	20.01	<30
	lbs/day	0.1	NA
Vinyl Chloride	µg/L	2,484.000	<0.14
	lbs/day	11.9	NA

NA = Not Available

[1] Chlordane shall mean the sum of chlordane-alpha, chlordane-gamma, chlordene-alpha, chlordene-gamma, nonachlor-alpha, nonachlor-gamma, and oxychlordane.

[2] DDT shall mean the sum of 4,4'-DDT; 2,4'-DDT; 4,4'-DDE; 2,4'-DDE; 4,4'-DDD; and 2,4'-DDD.

[3] Halomethanes shall mean the sum of bromoform, bromomethane (methyl bromide), chloromethane (methyl chloride), chlorodibromomethane, and dichlorobromomethane.

[4] PAHS (Polynuclear aromatic hydrocarbons) shall mean the sum of acenaphthylene, anthracene, 1,2-benzanthracene; 3,4-benzofluoranthene; benzo(k)fluoranthene; 1,12-benzoperylene; benzo(a)pyrene; chrysene; dibenzo(a,h)anthracene; fluorene; indeno(1,2,3-cd)pyrene; phenanthrene; and pyrene.

[5] PCBs (polychlorinated biphenyls) shall mean the sum of chlorinated biphenyls whose analytical characteristics resemble those of Aroclor-1016, Aroclor-1221, Aroclor-1232, Aroclor-1242, Aroclor-1248, Aroclor-1254, and Aroclor-1260.

[6] TCDD Equivalents shall mean the sum of those concentrations of chlorinated dibenzodioxins (2,3,7,8-CDDs) and chlorinated dibenzofurans (2,3,7,8-CDFs) multiplied by their respective toxicity factors, as listed in Appendix I of the Ocean Plan.

D. Compliance Summary

The Discharger has been in compliance with all limitations and requirements of Order No. R3-2007-0002, with the exception of TCDD Equivalents. For the month of April 2009, the Discharger reported a monthly average effluent concentration for TCDD equivalents of 0.63221 pg/L. This is an exceedance of the monthly average effluent limitation of 0.269 pg/L.

E. Planned Changes – Not Applicable

III. Applicable Plans, Policies, and Regulations

The requirements contained in the proposed Order are based on the requirements and authorities described in this section.

A. Legal Authorities

This Order is issued pursuant to section 402 of the federal Clean Water Act (CWA) and implementing regulations adopted by the U.S. Environmental Protection Agency (USEPA) and chapter 5.5, division 7 of the California Water Code (commencing with section 13370). It shall serve as an NPDES permit for point source discharges from this facility to surface waters. This Order also serves as waste discharge requirements (WDRs) pursuant to article 4, chapter 4, division 7 of the Water Code (commencing with section 13260).

B. California Environmental Quality Act (CEQA)

Pursuant to Water Code section 13389, this action to adopt an NPDES permit is exempt from the provisions of CEQA, Public Resources Code sections 21100 through 21177.

C. State and Federal Regulations, Policies, and Plans

1. **Water Quality Control Plans.** The Central Coast Water Board has adopted a Water Quality Control Plan for the Central Coast Region (hereinafter Basin Plan) that designates beneficial uses, establishes water quality objectives (WQOs), and contains implementation programs and policies to achieve those objectives for receiving waters addressed within the Region. To address ocean waters, the Basin Plan incorporates by reference the Water Quality Control Plan for Ocean Waters of California (the Ocean Plan). The Ocean Plan is discussed in further detail in section III.C.2 of this Fact Sheet.

   The Basin Plan implements State Water Board Resolution No. 88-63, which establishes State policy that all waters, with certain exceptions, should be considered suitable or potentially suitable for municipal or domestic supply (MUN). Because of very high levels of total dissolved solids (TDS) in the Pacific Ocean, the receiving waters for discharges from the Facility meet an exception to Resolution No. 88-63, which precludes waters with TDS levels greater than 3,000 mg/L from the MUN designation. Beneficial uses established by the Basin Plan for the Pacific Ocean between Point San Luis and Point Sal are presented below.

Table F-7. Basin Plan Beneficial Uses

Discharge Point	Receiving Water	Beneficial Use(s)
001	Coastal Waters (Point San Luis to Point Sal)	Water Contact Recreation (REC-1) Non-contact Water Recreation (REC-2) Industrial Service Supply (IND) Navigation (NAV) Marine Habitat (MAR) Shellfish Harvesting (SHELL) Commercial and Sport Fishing (COMM) Rare, threatened, or endangered species (RARE) Wildlife Habitat (WILD)

Requirements of this Order implement the Basin Plan.

2. **California Ocean Plan.** The State Water Board adopted the Ocean Plan in 1972 and amended it in 1978, 1983, 1988, 1990, 1997, 2000, 2005, and 2009. The State Water Board adopted the latest amendment on September 15, 2009; it was approved by the Office of Administrative Law (OAL) on March 10, 2010 and subsequently approved by the USEPA. The Ocean Plan applies, in its entirety, to point source discharges to the Pacific Ocean. The Ocean Plan identifies the following beneficial uses of State ocean waters.

Table F-8. Ocean Plan Beneficial Uses

Discharge Point	Receiving Water	Beneficial Use(s)
001	Pacific Ocean	Industrial water supply Water contact recreation Non-contact recreation Navigation Commercial and sport fishing Mariculture Preservation and enhancement of designated Areas of Special Biological Significance (ASBS) Rare and endangered species Marine habitat Fish migration Fish spawning and shellfish harvesting

3. **Thermal Plan.** The State Water Board adopted a Water Quality Control Plan for Control Temperature in the Coastal and Interstate Water and Enclosed Bays and Estuaries of California (Thermal Plan) on May 18, 1972, and amended this plan on September 18, 1975. This plan contains temperature objectives for coastal waters of California.

4. **Alaska Rule.** On March 30, 2000, USEPA revised its regulation that specifies when new and revised state and tribal water quality standards become effective for CWA purposes [65 Fed. Reg. 24641 (April 27, 2000), codified at 40 CFR 131.21]. Under the revised regulation (also known as the Alaska Rule), new and revised standards submitted to USEPA after May 30, 2000 must be approved by USEPA before being used for CWA purposes. The final rule also provides that standards already in effect and submitted to USEPA by May 30, 2000, may be used for CWA purposes, whether or not approved by USEPA.

5. **Antidegradation Policy.** NPDES regulations at 40 CFR 131.12 require that State water quality standards include an antidegradation policy consistent with the federal policy. The State Water Board established California's antidegradation policy in State Water Board Resolution No. 68-16, which incorporates the federal antidegradation policy where the federal policy applies under federal law. Resolution No. 68-16 requires that the existing quality of waters be maintained unless degradation is justified based on specific findings. The Central Coast Water Board's Basin Plan implements and incorporates by reference both the State and federal antidegradation policies. As discussed in section IV.D.2 of this Fact Sheet, the

permitted discharge is consistent with the antidegradation provisions of 40 CFR 131.12 and State Water Board Resolution No. 68-16.

6. **Anti-Backsliding Requirements.** CWA Sections 402(o)(2) and 303(d)(4) and NPDES regulations at 40 CFR 122.44(l) prohibit backsliding in NPDES permits. These anti-backsliding provisions require effluent limitations in a reissued permit to be as stringent as those in the previous permit, with some exceptions where limitations may be relaxed. As discussed in section IV.D.1 of this Fact Sheet, effluent limitations and other requirements established by this Order satisfy applicable anti-backsliding provisions of the CWA and NPDES regulations.

D. Impaired Water Bodies on CWA 303(d) List

CWA section 303(d) requires states to identify specific water bodies where water quality standards are not expected to be met after implementation of technology-based effluent limitations on point sources. For all 303(d) listed water bodies and pollutants, the Central Coast Water Board must develop and implement Total Maximum Daily Loads (TMDLs) that will specify Waste Load Allocations (WLAs) for point sources and Load Allocations (LAs) for non-point sources.

The USEPA approved the State's 2010 303(d) list of impaired water bodies on November 12, 2010. The Discharge is into the Pacific Ocean off the coast of Pismo State Beach, approximately 6 miles south of Pismo Pier. This area off the coast of Pismo State Beach, is not listed on the 303(d) list.

TMDLs establish WLAs for point source and LAs for non-point sources and are intended to achieve the water quality standards for the impaired waterbodies. Currently, there are no TMDLs applicable to this Facility.

E. Other Plans, Polices and Regulations – Not Applicable

IV. Rationale For Effluent Limitations and Discharge Specifications

The CWA requires point source dischargers to control the amount of conventional, non-conventional, and toxic pollutants that are discharged into the waters of the United States. The control of pollutants discharged is established through effluent limitations and other requirements in NPDES permits. NPDES regulations establish two principal bases for effluent limitations. At 40 CFR 122.44(a) permits are required to include applicable technology-based limitations and standards; and at 40 CFR 122.44(d) permits are required to include water quality-based effluent limitations (WQBELs) to attain and maintain applicable numeric and narrative water quality criteria to protect the beneficial uses of the receiving water. When numeric water quality objectives have not been established, but a discharge has the reasonable potential to cause or contribute to an excursion above a narrative criterion, WQBELs may be established using one or more of the three methods described in 40 CFR 122.44(d) – 1) WQBELs may be established on a case-by-case basis using USEPA criteria guidance published under CWA Section 304(a); 2) WQBELs may be established using an indicator parameter for the pollutant of concern; or 3) WQBELs may be established using a calculated water quality criterion derived from a proposed State criterion or an explicit State policy or regulation interpreting its narrative criterion.

A. Discharge Prohibitions

1. **Discharge Prohibition III.A** (No discharge at a location or in a manner except as described by the Order). The Order authorizes a single, specific point of discharge to surface waters, and the limitations and conditions established by the Order are based on specific information provided by the Discharger and gained by the Central Coast Water Board through site visits, monitoring reports, and other information. Discharges to surface waters at locations not contemplated by this Order or discharges of a character not contemplated by this Order are therefore viewed as inconsistent with CWA section 402's prohibition against discharges of pollutants except in compliance with the Act's permit requirements, effluent limitations, and other enumerated provisions. This prohibition is similar to the requirements of Discharge Prohibition III.A of Order No. R3-2007-0002.

2. **Discharge Prohibition III.B** (The bypass or overflow of wastewater or wastes to surface waters or surface water drainage courses is prohibited, except as provided for in Attachment D, Standard Provision I.G (Bypass), is prohibited.). The discharge of untreated or partially treated wastewater from the Discharger's collection, treatment, or disposal facilities represents an unauthorized bypass pursuant to 40 CFR 122.41(m) or an unauthorized discharge, which poses a threat to human health and/or aquatic life, and therefore, is explicitly prohibited by the Order.

3. **Discharge Prohibition III.C** (The discharge of any waste not specifically regulated by this Order is prohibited). Because limitations and conditions of the Order have been prepared based on specific information provided by the Discharger and specific wastes described by the Discharger, the limitations and conditions of the Order do not adequately address waste streams not contemplated during drafting of the Order. To prevent the discharge of such waste streams that may be inadequately regulated, the Order prohibits the discharge of any waste that was not described to the Central Coast Water Board during the process of permit reissuance. This prohibition is similar to Discharge Prohibition III.B of Order No. R3-2007-0002.

4. **Discharge Prohibition III.D** (The discharge of sanitary wastes to other than a subsurface septic tank/leachfield system is prohibited). This prohibition has been carried forward from Order No. R3-2002-002

B. Technology-Based Effluent Limitations

1. Scope and Authority

CWA section 301(b) and 40 CFR 122.44(a) require that permits include applicable technology-based limitations and standards. Where USEPA has not yet developed technology-based standards for a particular industry or a particular pollutant, CWA section 402(a)(1) and 40 CFR 125.3 authorize the use of best professional judgment (BPJ) to derive technology-based effluent limitations on a case-by-case basis. When BPJ is used, the permit must reflect specific factors outlined at 40 CFR 125.3.

USEPA has established standards of performance (technology-based limitations and standards) for the petroleum refining industry at 40 CFR Part 419, *Effluent*

Limitations Guidelines for the Petroleum Refining Point Source Category. Subpart B of these regulations for the Cracking Subcategory apply to discharges from the Facility and have been used to develop limitations and requirements of this Order.

The CWA requires that technology-based effluent limitations be established based on several levels of controls:

- Best practicable treatment control technology (BPT) represents the average of the best performance by plants within an industrial category or subcategory. BPT standards apply to toxic, conventional, and non-conventional pollutants.

- Best available technology economically achievable (BAT) represents the best existing performance of treatment technologies that are economically achievable within an industrial point source category. BAT standards apply to toxic and non-conventional pollutants.

- Best conventional pollutant control technology (BCT) represents the control from existing industrial point sources of conventional pollutants including BOD, TSS, fecal coliform, pH, and oil and grease. The BCT standard is established after considering the "cost reasonableness" of the relationship between the cost of attaining a reduction in effluent discharge and the benefits that would result, and also the cost effectiveness of additional industrial treatment beyond BPT.

- New source performance standards (NSPS) represent the best available demonstrated control technology standards. The intent of NSPS guidelines is to set limitations that represent state-of-the-art treatment technology for new sources.

The CWA requires USEPA to develop effluent limitations, guidelines and standards (ELGs) representing application of BPT, BAT, BCT, and NSPS.

2. Applicable Technology-Based Effluent Limitations

a. Federal Regulations. Based on the type of operation, the Facility must comply with the ELGs published in Part 419, Subpart B; Petroleum Point Source Category, Cracking Subcategory.

40 CFR Section 419.20 states that the provisions of Subpart B (Cracking Subcategory) are applicable to all discharges from any facility that produces petroleum products by the use of topping and cracking, whether or not the facility includes any process in addition to topping and cracking. The Facility began operations in 1955 and must meet effluent limitations based on BPT, BAT, and BCT criteria. New source performance standards are not applicable to this discharge because major facility processes or wastewater handling modifications have not been conducted since the adoption of the BAT and BCT criteria in August 1985. BPT, BAT, and BCT criteria have been applied in the development of the technology-based effluent limitations.

The refinery primarily uses high nitrogen California crudes in its refinery processes and the constituents in the raw waste load of the Facility are unique. The Facility has shown that it is unable to consistently meet federal ammonia nitrogen limitations established in the applicable ELGs despite having a wastewater treatment system that meets BPT and BAT. This inability to meet ammonia nitrogen limitations is due to the high organic nitrogen load in the raw wastewater. As a result, the refinery requested a fundamentally different factors (FDF) variance from the BAT limitations for ammonia. The FDF was submitted to USEPA and the Central Coast Water Board and approved on June 9, 1978, and again in 1989 following the establishment of BAT and BCT criteria in 1985. The BAT and BCT criteria in the ELGs have not changed since their establishment in August 1985. Therefore, as of the 1989 variance request to the USEPA, and the Central Coast Water Board's subsequent reissuance of waste discharge requirements in 1991, 1996, 2002, and 2007 which including the FDF, the FDF continues to be appropriate and valid and is carried over to this Order.

The applicable ELGs for the Facility are based on production. In ROWD submitted on March 6, 2012, the Discharger reported the following quantities as actual measurements of the level of production. It should be noted that actual production level for 2011 was only 39,099 bbl/day; 2009 – 2010 had even lower production; 2008 was the highest full year with 42,183 bbl/day; the last three months of 2007 for which I have data for show an average of 43,925 bbl/day.

Table F-9. Reported Production Level

Quantity Per Day (as 1,000 barrels per day)	Operation
44.4	Atmospheric Distillation
32.0	Vacuum Distillation
23.2	Delayed Coking

The calculations for the technology based-effluent limitations for biochemical oxygen demand (5-day @ 20 °C) (BOD_5), total suspended solids (TSS), chemical oxygen demand (COD), oil and grease, phenolic compounds, ammonia (as N), sulfide, total chromium, and hexivalent chromium are contained in Attachment G. The technology based-effluent limitations for ammonia (as N) are based on the derived FDF limitations approved by the USEPA and the Central Coast Water Board in 1978 and again in 1989. In addition to the calculated technology based-effluent limitations contained in Attachment G, BPT and BCT criteria require that the effluent remain between a pH of 6.0 and 9.0 standard units.

Table F-10. Summary of Technology-based Effluent Limitations

Parameters	Units	Effluent Limitations			
		Average Monthly	Maximum Daily	Instantaneous Minimum	Instantaneous Maximum
BOD_5	lbs/day	204	367	--	--
TSS	lbs/day	163	256	--	--
COD	lbs/day	1,430	2,750	--	--

Parameters	Units	Effluent Limitations			
		Average Monthly	Maximum Daily	Instantaneous Minimum	Instantaneous Maximum
Oil and Grease	lbs/day	59.4	111	--	--
Phenolic Compounds	lbs/day	1.06	2.7	--	--
Ammonia (as N)	lbs/day	220	290	--	--
Sulfide	lbs/day	1.08	2.41	--	--
Total Chromium	lbs/day	1.26	3.60	--	--
Hexavalent Chromium	lbs/day	0.102	0.230	--	--
pH	standard units	--	--	6.0	9.0

In addition to the technology based-effluent limitations contained in Table F-10, and in accordance with Sections 419.22(e)(2), 419.23(f)(2), and 419.24(e)(2), additional mass loading credits for storm water runoff which is commingled with process wastewater and is treated in the main treatment system and discharged to the Pacific Ocean, may be granted. During wet weather runoff, the following incremental effluent credits shall be added to the effluent limitations specified in Table F-11.

Table F-11. Storm Runoff Credits.

Parameters	Units	Effluent Limitations	
		Monthly Average	Daily Maximum
BOD_5	lbs/1,000 gallon[1]	0.22	0.40
TSS	lbs/1,000 gallon[1]	0.18	0.28
COD	lbs/1,000 gallon[1]	1.5	3.0
Oil and Grease	lbs/1,000 gallon[1]	0.067	0.13
Phenolic Compounds	lbs/1,000 gallon[1]	0.0014	0.0029
Total Chromium	lbs/1,000 gallon[1]	0.0018	0.0050
Hexavalent Chromium	lbs/1,000 gallon[1]	0.00023	0.00052

[1] Credits shall be calculated based solely on the measured flow of contaminated storm runoff.

b. Ocean Plan. The Ocean Plan is applicable, in its entirety, to point source discharges to the ocean. Therefore, the discharge of wastewater to the Pacific Ocean at Discharge Point No. 001 is subject to the Ocean Plan.

Table A of the Ocean Plan establishes effluent limitations for industrial discharges for which ELGs have not been established by the USEPA. Since ELGs exist for the Facility, numeric effluent limitations based on Table A of the Ocean Plan are not applicable to the Facility for discharges from Discharge Point No. 001.

C. Water Quality-Based Effluent Limitations (WQBELs)

1. Scope and Authority

NPDES regulations at 40 CFR 122.44(d) require that permits include limitations more stringent than applicable federal technology-based requirements where necessary to achieve applicable water quality standards, including numeric and narrative objectives within a standard.

The process for determining "reasonable potential" and calculating WQBELs, when necessary, is intended to protect the designated uses of receiving waters as specified in the Basin and Ocean Plans and achieve applicable WQOs and criteria that are contained in the Basin Plan and in other applicable State and federal rules, plans, and policies, including applicable water quality criteria from the Ocean Plan.

Where reasonable potential has been established for a pollutant, but there is no numeric criterion or objective for the pollutant, WQBELs must be established in accordance with the requirements of 40 CFR 122.44(d)(1)(vi), using (1) USEPA criteria guidance under CWA section 304(a), supplemented where necessary by other relevant information; (2) an indicator parameter for the pollutant of concern; or (3) a calculated numeric water quality criterion, such as a proposed state criterion or policy interpreting the state's narrative criterion, supplemented with other relevant information.

2. Applicable Beneficial Uses and Water Quality Criteria and Objectives

Beneficial uses for ocean waters of the Central Coast Region are established by the Basin Plan and Ocean Plan and are described in section III.C of the this Fact Sheet.

Water quality criteria applicable to ocean waters of the Region are established by the Ocean Plan, which includes WQOs for bacterial characteristics, physical characteristics, and radioactivity. The WQOs from the Ocean Plan are incorporated as receiving water limitations in this Order. In addition, Table B of the Ocean Plan contains numeric WQOs for 83 toxic pollutants for the protection of marine aquatic life and human health. Pursuant to NPDES regulations at 40 CFR 122.44(d)(1), and in accordance with procedures established by the Ocean Plan (2009), the Central Coast Water Board has performed a reasonable potential analysis (RPA) to determine the need for effluent limitations for Table B toxic pollutants.

3. Determining the Need for WQBELs

Procedures for performing a RPA for ocean dischargers are described in Section III.C and Appendix VI of the Ocean Plan. The procedure is a statistical method that projects an effluent data set while taking into account the averaging period of WQOs, the long term variability of pollutants in the effluent, limitations associated with sparse data sets, and uncertainty associated with censored data sets. The procedure assumes a lognormal distribution of the effluent data set, and compares the 95th percentile concentration at 95 percent confidence of each Table B pollutant,

accounting for dilution, to the applicable water quality criterion. The RPA results in one of three following endpoints:

Endpoint 1 - There is "reasonable potential". An effluent limitation must be developed for the pollutant. Effluent monitoring for the pollutant, consistent with the monitoring frequency in Appendix III (Ocean Plan), is required.

Endpoint 2 - There is no "reasonable potential". An effluent limitation is not required for the pollutant. Appendix III (Ocean Plan) effluent monitoring is not required for the pollutant; the Central Coast Board, however, may require occasional monitoring for the pollutant or for whole effluent toxicity as appropriate.

Endpoint 3 - The RPA is inconclusive. Monitoring for the pollutant or whole effluent toxicity testing consistent with the monitoring frequency in Appendix III (Ocean Plan) is required. An existing effluent limitation for the pollutant shall remain in the permit, otherwise the permit shall include a reopener clause to allow for subsequent modification of the permit to include an effluent limitation if monitoring establishes that the discharge causes, has the reasonable potential to cause, or contribute to an excursion above a Table B water quality objective.

The State Water Board has developed a reasonable potential calculator, which is available at:

http://www.swrcb.ca.gov/water_issues/programs/ocean/docs/trirev/stakeholder050505/rpcalc20_setup.exe

The calculator (RPcalc 2.0) was used in the development of this Order and considers several pathways in the determination of reasonable potential.

a. First Path

If available information about the receiving water or the discharge supports a finding of reasonable potential without analysis of effluent data, the Central Coast Water Board may decide that WQBELs are necessary after a review of such information. Such information may include: the facility or discharge type, solids loading, lack of dilution, history of compliance problems, potential toxic effects, fish tissue data, 303(d) status of the receiving water, the presence of threatened or endangered species or their critical habitat, or other information.

b. Second Path

If any pollutant concentration, adjusted to account for dilution, is greater than the most stringent applicable WQO, there is reasonable potential for that pollutant.

c. Third Path

If the effluent data contains three or more detected and quantified values (i.e., values that are at or above the minimum level (ML)), and all values in the data set are at or above the ML, a parametric RPA is conducted to project the range of possible effluent values. The 95th percentile concentration is determined at 95 percent confidence for each pollutant, and compared to the most stringent applicable water quality objective to determine reasonable potential. A parametric analysis assumes that the range of possible effluent values is distributed lognormally. If the 95th percentile value is greater than the most stringent applicable water quality objective, there is reasonable potential for that pollutant.

d. Fourth Path

If the effluent data contains three or more detected and quantified values (i.e., values that are at or above the ML), but at least one value in the data set is less than the ML, a parametric RPA is conducted according to the following steps.

i. If the number of censored values (those expressed as a “less than” value) account for less than 80 percent of the total number of effluent values, calculate the M_L (the mean of the natural log of transformed data) and S_L (the standard deviation of the natural log of transformed data) and conduct a parametric RPA, as described above for the Third Path.

ii. If the total number of censored values account for 80 percent of the total number of effluent values, conduct a non-parametric RPA, as described below for the Fifth Path. (A non-parametric analysis becomes necessary when the effluent data is limited, and no assumptions can be made regarding its possible distribution.)

e. Fifth Path

A non-parametric RPA is conducted when the effluent data set contains less than three detected and quantified values, or when the effluent data set contains three or more detected and quantified values but the number of censored values accounts for 80 percent or more of the total of effluent values. A non-parametric analysis is conducted by ordering the data, comparing each result to the applicable WQO, and accounting for ties. The sample number is reduced by one for each tie, when the dilution-adjusted method detection limit (MDL) is greater than the water quality objective. If the adjusted sample number, after accounting for ties, is greater than 15, the pollutant has no reasonable potential to exceed the WQO. If the sample number is 15 or less, the RPA is inconclusive, monitoring is required, and any existing effluent limits in the expiring permit are retained.

In this case, an RPA was conducted using effluent monitoring data from October 2007 through December 2011. The implementation provisions for Table B in Section III.C of the Ocean Plan specify that the minimum initial dilution is the lowest average initial dilution within any single month of the year. Dilution estimates shall be based on observed waste flow characteristics, observed receiving water density structure, and the assumption that no currents of sufficient strength to influence the initial dilution process flow across the discharge structure. Order No. R3-2007-0002

determined the minimum initial dilution factor (Dm) for the discharge to be 83 to 1 (seawater to effluent) when effluent flows were less than or equal to 0.285 MGD and 68 to 1 (seawater to effluent) when effluent flows were greater than 0.285 MGD and up to 0.575 MGD. The Discharger has indicated that no additions or modifications to the Facility have occurred or are expected that would alter the previously determined dilution characteristics. Therefore, the previous Dm of 83 to 1 for flows less than or equal to 0.285 MGD, and 68 to 1 when flows are greater than 0.285 MGD, will be retained from the current Order and applied to WQBELs established herein. If the actual dilution ratio is found to be different, then the ratio will be recalculated and this Order may be reopened when and as appropriate.

A summary of the RPA results is provided below.

Table F-12. RPA Results

Parameter	Units	n[1]	MEC[2],[3]	Most Stringent Criteria	Background	RPA Endpoint[4]	
						68:1	83:1
Arsenic	µg/L	9	17	8[5]	3[6]	2	2
Cadmium	µg/L	9	<3.5	1[5]	0	3	3
Chromium, Total Recoverable	µg/L	9	6	2[5]	0	2	2
Copper	µg/L	9	15	3[5]	2[6]	2	2
Lead	µg/L	9	0.52	2[5]	0	2	2
Mercury	µg/L	9	0.22	0.04[5]	0.0005[6]	2	2
Nickel	µg/L	9	9.2	5[5]	0	2	2
Selenium	µg/L	9	550	15[5]	0	1	1
Silver	µg/L	0	<3	0.7[5]	0.16[6]	3	3
Zinc	µg/L	9	190	20[5]	8[6]	2	2
Cyanide	µg/L	9	43	1[5]	0	1	2
Total Residual Chlorine	µg/L	10	<100	2[5]	0	3	3
Ammonia	µg/L	44	7,300	600[5]	0	2	2
Acute Toxicity	TUa	NA	NA	0.3[7]	0	3	3
Chronic Toxicity	TUc	9	179	1[7]	0	1	1
Phenolic Compounds[8]	µg/L	9	<40	30[5]	0	3	3
Chlorinated Phenolics[9]	µg/L	9	<80	1[5]	0	3	3
Endosulfan[10]	µg/L	NA	NA	0.009[5]	0	3	3
Endrin	µg/L	NA	NA	0.002[5]	0	3	3
HCH[11]	µg/L	NA	NA	0.004[5]	0	3	3
Radioactivity	pCi/L	NA	NA	[12]	0	3	3
Acrolein	µg/L	9	<7.9	220[13]	0	3	3
Antimony	µg/L	9	<34	1,200[13]	0	3	3
Bis(2-chloroethoxyl)methane	µg/L	9	<16	4.4[13]	0	3	3
Bis(2-chloroisopropyl)ether	µg/L	9	<15	1,200[13]	0	3	3
Chlorobenzene	µg/L	9	<0.11	570[13]	0	3	3
Chromium (III)	µg/L	9	5.6	190,000[13]	0	3	3
Di-n-butyl phthalate	µg/L	9	<20	3,500[13]	0	3	3
Dichlorobenzenes[14]	µg/L	9	<0.5	5,100[13]	0	3	3
Diethyl phthalate	µg/L	9	<16	33,000[13]	0	3	3

Parameter	Units	n[1]	MEC[2],[3]	Most Stringent Criteria	Background	RPA Endpoint[4]	
						68:1	83:1
Dimethyl phthalate	µg/L	9	<20	820,000[13]	0	3	3
4,6-Dinitro-2-methylphenol	µg/L	9	<25	220[12]	0	3	3
2,4-Dinitrophenol	µg/L	9	<24	4.0[12]	0	3	3
Ethylbenzene	µg/L	9	<0.13	4,100[13]	0	3	3
Fluoranthene	µg/L	9	<10	15[13]	0	3	3
Hexachlorocyclopentadiene	µg/L	9	<15	58[13]	0	3	3
Nitrobenzene	µg/L	9	<13	4.9[13]	0	3	3
Thallium	µg/L	9	<0.11	2[13]	0	3	3
Toluene	µg/L	9	<0.12	85,000[13]	0	3	3
Tributyltin	µg/L	9	<0.03	0.0014[13]	0	3	3
1,1,1-Trichloroethane	µg/L	9	<0.27	540,000[13]	0	3	3
Acrylonitrile	µg/L	9	<2.0	0.10[13]	0	3	3
Aldrin	µg/L	NA	NA	0.000022[13]	0	3	3
Benzene	µg/L	9	<0.12	5.9[13]	0	3	3
Benzidine	µg/L	9	<360	0.000069[13]	0	3	3
Beryllium	µg/L	9	<0.22	0.033[13]	0	3	3
Bis(2-chloroethyl) ether	µg/L	9	<34	0.045[13]	0	3	3
Bis(2-ethylhexyl) phthalate	µg/L	9	7.1	3.5[13]	0	3	3
Carbon tetrachloride	µg/L	9	<0.12	0.90[13]	0	3	3
Chlordane[15]	µg/L	NA	NA	0.000023[13]	0	3	3
Chlorodibromomethane	µg/L	9	<0.13	8.6[13]	0	3	3
Chloroform	µg/L	9	<0.12	130[13]	0	3	3
DDT[16]	µg/L	9	NA	0.00017[13]	0	3	3
1,4-Dichlorobenzene	µg/L	9	<0.12	18[13]	0	3	3
3,3-Dichlorobenzidine	µg/L	9	<410	0.0081[13]	0	3	3
1,2-Dichloroethane	µg/L	9	<0.14	28[13]	0	3	3
1,1-Dichloroethylene	µg/L	9	<0.12	0.9[13]	0	3	3
Dichlorobromomethane	µg/L	9	<0.24	6.2[13]	0	3	3
Dichloromethane	µg/L	9	0.32	450[13]	0	3	3
1,3-Dichloropropene	µg/L	9	<0.14	8.9[13]	0	3	3
Dieldrin	µg/L	NA	NA	0.00004[13]	0	3	3
2,4-Dinitrotoluene	µg/L	9	<13	2.6[13]	0	3	3
1,2-Diphenylhydrazine	µg/L	9	<17	0.16[13]	0	3	3
Halomethanes[17]	µg/L	9	0.24	130[13]	0	3	3
Heptachlor	µg/L	NA	NA	0.00005[13]	0	3	3
Heptachlor Epoxide	µg/L	NA	NA	0.00002[13]	0	3	3
Hexachlorobenzene	µg/L	9	<10	0.00021[13]	0	3	3
Hexachlorobutadiene	µg/L	9	<12	14[13]	0	3	3
Hexachloroethane	µg/L	9	<16	2.5[13]	0	3	3
Isophorone	µg/L	9	<16	730[13]	0	3	3
N-nitrosodimethylamine	µg/L	9	<30	7.3[13]	0	3	3
N-nitrosodi-N-propylamine	µg/L	9	<65	0.38[13]	0	3	3
N-nitrosodiphenylamine	µg/L	9	<22	2.5[13]	0	3	3
PAHs[18]	µg/L	9	<32	0.0088[13]	0	3	3

Parameter	Units	n[1]	MEC[2],[3]	Most Stringent Criteria	Background	RPA Endpoint[4]	
						68:1	83:1
PCBs[19]	µg/L	NA	NA	0.000019[13]	0	3	3
TCDD equivalents[20]	pg/L	3	0.0714	0.0039[13]	0	1	1
1,1,2,2-Tetrachoroethane	µg/L	9	<0.31	2.3[13]	0	3	3
Tetrachloroethylene	µg/L	9	<0.11	2.0[13]	0	3	3
Toxaphene	µg/L	NA	NA	0.00021[13]	0	3	3
Trichloroethylene	µg/L	9	<0.15	27[13]	0	3	3
1,1,2-Trichloroethane	µg/L	9	<0.21	9.4[13]	0	3	3
2,4,6-Trichlorophenol	µg/L	9	<30	0.29[13]	0	3	3
Vinyl Chloride	µg/L	9	<0.14	36[13]	0	3	3

NA = Not Available

[1] Number of data points available for the RPA.

[2] If there is a detected value, the highest reported value is summarized in the table. If there are no detected values, the lowest MDL is summarized in the table.

[3] Note that the reported MEC does not account for dilution. The RPA does account for dilution; therefore it is possible for a parameter with an MEC in exceedance of the most stringent criteria not to present a RP (i.e. Endpoint 1).

[4] End Point 1 – RP determined, limit required, monitoring required.
End Point 2 – Discharger determined not to have RP, monitoring may be established.
End Point 3 – RPA was inconclusive, carry over previous limits if applicable, and establish monitoring.

[5] Based on the 6-Month Median in the Table B of the Ocean Plan.

[6] Background concentrations contained in Table C of the Ocean Plan.

[7] Based on the Daily Maximum in Table B of the Ocean Plan.

[8] Non-chlorinated phenolic compounds represent the sum of 2,4-dimethylphenol; 4,6-dinitro-2-methylphenol; 2,3-dinitrophenol; 2-methylphenol; 4-methylphenol; 2-nitropheneol; 4-nitrophenol, and phenol.

[9] Chlorinated phenolic compounds represent the sum of 4-chloro-3-methylpheno; 2-chlorophenol; pentachlorophenol; 2,4,5-trichlorophenol; and 2,4,6-trichlorophenol.

[10] Endosulfan represents the sum of alpha-endosulfan, beta-endosulfan, and endosulfan sulfate.

[11] HCH (hexachlorocyclohexane) represents the sum of the alpha, beta, gamma (Lindane), and delta isomers of hexachlorocyclohexane.

[12] Not to exceed limits specified in Title 17, Division 1, Chapter 5, Subchapter 4, Group 3, Article 3, Section 30253 of the California Code of Regulations. Radioactivity at levels that exceed the applicable criteria are not expected in the discharge.

[13] Based on 30-Day Average in Table B of the Ocean Plan.

[14] Dichlorobenzenes represent the sum of 1,2- and 1,3-dichlorobenzene.

[15] Chlordane represents the sum of chlordane-alpha, chlordane-gamma, chlordene-alpha, chlordene-gamma, nonachlor-alpha, nonachlor-gamma, and oxychlordane.

[16] DDT represents the sum of 4,4'DDT; 2,4'DDT; 4,4'DDE; 2,4'DDE; 4,4'DDD; and 2,4'DDD.

[17] Halomethanes represent the sum of bromoform, bromomethane (methyl bromide), and chloromethane (methyl chloride).

[18] PAHs (polynuclear aromatic hydrocarbons) represent the sum of acenapthalene; anthracene; 1,2-benzanthracene; 3,4-benzofluoranthene; benzo[k]fluoranthene; 1,12-benzoperylene; benzo[a]pyrene; chrysene; dibenzo[a,h]anthracene; fluorene; indeno[1,2,3-cd]pyrene; phenanthrene; and pyrene.

[19] PCBs (polychlorinated biphenyls) represent the sum of chlorinated biphenyls whose analytical characteristics resemble those of Aroclor-1016, Aroclor-1221, Aroclor-1232, Aroclor-1242, Aroclor-1248, Arolclor-1254, and Arcolor-1260.

[20] TCDD equivalents represent the sum of concentrations of chlorinated dibenzodioxins (2,3,7,8-CDDs) and chlorinated dibenzofurans (2,3,7,8-CDFs) multiplied by their respective toxicity factors, as shown by the table below. USEPA Method 8280 may be used to analyze TCDD equivalents.

Parameter	Units	n[1]	MEC[2],[3]	Most Stringent Criteria	Background	RPA Endpoint[4]	
						68:1	83:1

Isomer Group	Toxicity Equivalence Factor
2,3,7,8 – tetra CDD	1.0
2,3,7,8 – penta CDD	0.5
2,3,7,8 – hexa CDD	0.1
2,3,7,8 – hepta CDD	0.01
octa CDD	0.001
2,3,7,8 – tetra CDF	0.1
1,2,3,7,8 – penta CDF	0.05
2,3,4,7,8 – penta CDF	0.5
2,3,7,8 – hexa CDFs	0.1
2,3,7,8 – hepta CDFs	0.01
Octa CDF	0.001

As summarized in Table F-12, selenium, TCDD equivalents, and chronic toxicity resulted in Endpoint 1 at both applicable dilutions, and cyanide resulted in Endpoint 1 at a dilution of 68 to 1 (when flows are greater than 0.285 MGD). Thus, effluent limitations for selenium, TCDD equivalents, and chronic toxicity must be retained, and effluent limitations for cyanide when flows are greater than 0.285 MGD must be established.

The RPA resulted in Endpoint 2 for arsenic, hexavalent chromium, copper, lead, mercury, nickel, zinc, and ammonia at both dilutions, and cyanide at a dilution of 83 to 1 (when flows are less than 0.285 MGD). Thus, effluent limitations not been carried over from Order No. R3-2007-002 for arsenic and nickel. Further, effluent limitations will not be established for copper, lead, mercury, and zinc at either dilution, nor for cyanide when flows are less than 0.285 MGD. Technology-based effluent limitations for hexavalent chromium and ammonia, based on the ELGs, are more stringent than the corresponding WQBELs would be, thus WQBELs for hexavalent chromium and ammonia are not necessary and have not been established.

All the remaining pollutants resulted in Endpoint 3. Parameters with WQBELs in the previous Order have been retained in this Order.

4. WQBEL Calculations

a. From the Table B WQOs in the Ocean Plan, effluent limitations in Order No. R3-2013-0028 were calculated according to the following equation for all pollutants, except for radioactivity:

$$Ce = Co + Dm (Co – Cs)$$ where,

Ce = the effluent limitation (µg/L)

Co = the WQO to be met at the completion of initial dilution (µg/L)

Cs = background seawater concentration

Dm = minimum probable initial dilution expressed as parts seawater per part wastewater

b. Initial dilution (Dm) has been determined to be 83 to 1 when flows less than or equal to 0.285 MGD, and 68 to 1 when flows are greater than 0.285 MGD, by the Central Coast Water Board.

c. Table C of the Ocean Plan establishes background concentrations for some pollutants to be used when determining reasonable potential (represented as "Cs"). In accordance with Table B implementing procedures, Cs equals zero for all pollutants not established in Table C. The background concentrations provided in Table C are summarized below:

Table F-13. Pollutants Having Background Concentrations

Pollutant	Background Seawater Concentration
Arsenic	3 µg/L
Copper	2 µg/L
Mercury	0.0005 µg/L
Silver	0.16 µg/L
Zinc	8 µg/L

d. Mass limitations have been established for the WQBELs in accordance with Section III.C.3.j of the Ocean Plan, which states, "Discharge requirements shall also specify effluent limitations in terms of mass emission rate limits utilizing the general formula:

lbs/day = 0.00834 X Ce X Q

where:

Ce = the effluent concentration limit, µg/L
Q = flow rate (MGD)

e. A summary of WQBELs established for Discharge Point No. 001 in this Order are provided in Table F-14.a – Table F-14.d, below.

Table F-14.a. Effluent Limitations, Protection of Marine Aquatic Life, Discharge Point No. 001 When Effluent Flow is Equal to or Less Than 0.285 MGD

Parameter	Units	Effluent Limitations[1]		
		Maximum Daily[2]	Instantaneous Maximum[3]	6-Month Median[4]
Cadmium, Total Recoverable	mg/L	0.34	0.84	0.08
	lbs/day	0.81	2.00	0.19

Parameter	Units	Effluent Limitations[1]		
		Maximum Daily[2]	Instantaneous Maximum[3]	6-Month Median[4]
Selenium	mg/L	5.04	12.60	1.26
	lbs/day	11.98	29.95	2.99
Silver	mg/L	0.22	0.57	0.06
	lbs/day	0.52	1.35	0.14
Total Chlorine Residual[5]	mg/L	0.67	5.04	0.17
	lbs/day	1.59	11.98	0.40
Phenolic Compounds (non-chlorinated)	mg/L	10.08	25.20	2.52
	lbs/day	23.96	59.90	5.99
Chlorinated Phenolics	mg/L	0.34	0.84	0.08
	lbs/day	0.81	2.00	0.19
Endosulfan[6]	µg/L	1.51	2.27	0.76
	lbs/day	3.59	5.40	1.81
Endrin	µg/L	0.34	0.50	0.17
	lbs/day	0.81	1.19	0.40
HCH[7]	µg/L	0.67	1.01	0.34
	lbs/day	1.59	2.40	0.81
Chronic Toxicity	TUc	84	---	---
Radioactivity	[8]			

[1] Based on a dilution factor of 83:1.

[2] The daily maximum shall apply to flow weighted 24-hour composite samples. Mass emissions shall be calculated and reported for all parameters with mass-based effluent limitations using the formula: lbs/day = 8.34 (daily average flow as MGD)(daily average concentration as mg/L).

[3] The instantaneous maximum shall apply to grab sample determinations. Mass emissions shall be calculated and reported for all parameters with mass-based effluent limitations using the formula: lbs/day = 8.34 (observed flow as MGD)(maximum effluent concentration as mg/L).

[4] The 6-month median shall apply as a moving median of daily values for any 180-day period in which daily values represent flow weighted average concentrations within a 24-hour period. For intermittent discharges, the daily value shall be considered equal to zero for days on which no discharge occurred. Mass emissions shall be calculated and reported for all parameters with mass-based effluent limitations using the formula: lbs/day = 8.34 (6-month median flow rate as MGD)(6-month median effluent concentration as mg/L).

[5] Water quality objectives for total chlorine residual applying to intermittent discharges not exceeding two hours shall be determined using the following equation:

$$\log(y) = -0.43 (\log x) + 1.8$$

where: y = the water quality objective (in µg/L) to apply when chlorine is being discharged
x = the duration of uninterrupted chlorine discharges in minutes

The applicable effluent limitation must then be determined using Equation No. 1 from the Ocean Plan.

[6] Shall mean the sum of endosulfan-alpha and –beta and endosulfan sulfate.

[7] Shall mean the sum of the alpha, beta, gamma and delta isomers of hexachlorocyclohexane.

[8] Radioactivity is not to exceed limits specified in Title 17, Division 1, Chapter 5, Subchapter 4, Group 3, Article 3, Section 30253 of the California Code of Regulations. Reference to Section 30253 is prospective including future changes to incorporate provisions of federal law, as the changes take effect.

Table F-14.b. Effluent Limitations, Protection of Marine Aquatic Life, Discharge Point No. 001 When Effluent Flow is Greater Than 0.285 MGD

Parameter	Units	Effluent Limitations[1]

		Maximum Daily[2]	Instantaneous Maximum[3]	6-Month Median[4]
Cadmium, Total Recoverable	mg/L	0.28	0.69	0.07
	lbs/day	1.34	3.31	0.34
Cyanide, Total[5]	mg/L	0.28	0.69	0.069
	lbs/day	1.3	3.3	0.33
Selenium	mg/L	4.14	10.35	1.04
	lbs/day	19.85	49.63	4.99
Silver	mg/L	0.18	0.47	0.05
	lbs/day	0.86	2.25	0.24
Total Chlorine Residual[6]	mg/L	0.55	4.14	0.14
	lbs/day	2.64	19.85	0.67
Phenolic Compounds (non-chlorinated)	mg/L	8.28	20.70	2.07
	lbs/day	39.71	99.27	9.93
Chlorinated Phenolics	mg/L	0.28	0.69	0.07
	lbs/day	1.34	3.31	0.34
Endosulfan[7]	µg/L	1.24	1.86	0.62
	lbs/day	5.95	8.92	2.97
Endrin	µg/L	0.28	0.41	0.14
	lbs/day	1.34	1.97	0.67
Hexachlorocyclohexane (HCH)[8]	µg/L	0.55	0.83	0.28
	lbs/day	2.64	3.98	1.34
Chronic Toxicity	TUc	69	--	--
Radioactivity	[9]			

[1] Based on a dilution factor of 68:1.

[2] The daily maximum shall apply to flow weighted 24-hour composite samples. Mass emissions shall be calculated and reported for all parameters with mass-based effluent limitations using the formula: lbs/day = 8.34 (daily average flow as MGD)(daily average concentration as mg/L).

[3] The The instantaneous maximum shall apply to grab sample determinations. Mass emissions shall be calculated and reported for all parameters with mass-based effluent limitations using the formula: lbs/day = 8.34 (observed flow as MGD)(maximum effluent concentration as mg/L).

[4] The 6-month median shall apply as a moving median of daily values for any 180-day period in which daily values represent flow weighted average concentrations within a 24-hour period. For intermittent discharges, the daily value shall be considered equal to zero for days on which no discharge occurred. Mass emissions shall be calculated and reported for all parameters with mass-based effluent limitations using the formula: lbs/day = 8.34 (6-month median flow rate as MGD)(6-month median effluent concentration as mg/L).

[5] If a Discharger can demonstrate to the satisfaction of the Central Coast Water Board (subject to USEPA approval) that an analytical method is available to reliably distinguish between strongly and weakly complexed cyanide, effluent limitations for cyanide may be met by the combined measurement of free cyanide, simple alkali metal cyanides, and weakly complexed organometallic cyanide complexes. In order for the analytical method to be acceptable, the recovery of free cyanide from metal complexes must be comparable to that achieved by the approved method in 40 CFR 136.

[6] Water quality objectives for total chlorine residual applying to intermittent discharges not exceeding two hours shall be determined using the following equation:

$$\log(y) = -0.43 (\log x) + 1.8$$

where:

y = the water quality objective (in µg/L) to apply when chlorine is being discharged.

x = the duration of uninterrupted chlorine discharges in minutes.

The applicable effluent limitation must then be determined using Equation No. 1 from the Ocean Plan.

[7] Shall mean the sum of endosulfan-alpha and –beta and endosulfan sulfate.

[8] Shall mean the sum of the alpha, beta, gamma and delta isomers of hexachlorocyclohexane.

[9] Radioactivity is not to exceed limits specified in Title 17, Division 1, Chapter 5, Subchapter 4, Group 3, Article 3, Section 30253 of the California Code of Regulations. Reference to Section 30253 is prospective including future changes to incorporate provisions of federal law, as the changes take effect.

Table F-14.c. Effluent Limitations, Protection of Human Health – Non-Carcinogens, Discharge Point No. 001

Parameter	Units	Average Monthly Effluent Limitations	
		≤ 0.285 MGD	> 0.285 MGD
Acrolein	mg/L	18.48	15.18
	lbs/day	43.92	72.80
Bis(2-Chloroethoxy)Methane	mg/L	0.3696	0.304
	lbs/day	88.6	1.5
Bis(2-Chloroisopropyl)Ether	mg/L	100.8	82.800
	lbs/day	8,926.5	397.1
Chlorobenzene	mg/L	47.88	39.330
	lbs/day	113.8	188.6
Chromium (III)	g/L	15.96	13.110
	lbs/day	37,935	62,869.0
Di-n-butyl Phthalate	mg/L	294	241.500
	lbs/day	698.8	1,158.1
Dichlorobenzenes	mg/L	428.4	351.900
	lbs/day	1,018.3	1,687.5
Diethyl Phthalate	mg/L	2,772	2,277.00
	lbs/day	6,588.8	10,919.3
Dimethyl Phthalate	g/L	68.88	56.580
	lbs/day	163,720.9	271,329.4
4,6-Dinitro-2-Methylphenol	mg/L	18.48	15.180
	lbs/day	43.92	72.8
2,4-Dinitrophenol	mg/L	0.336	0.276
	lbs/day	8.0	13.2
Ethylbenzene	mg/L	344.4	282.900
	lbs/day	818.6	1,356.6
Fluoranthene	mg/L	1.26	1.035
	lbs/day	3.0	5.0
Hexachlorocyclopentadiene	mg/L	4.872	4.002
	lbs/day	11.6	19.2
Nitrobenzene	mg/L	0.4116	0.338
	lbs/day	1.0	1.6
Thallium	mg/L	0.168	0.138
	lbs/day	0.4	0.7
Toluene	g/L	7.14	5.865
	lbs/day	16,971.1	28,125.6
Tributyltin	µg/L	0.1176	0.097
	lbs/day	0.0003	0.0004
1,1,1-Trichloroethane	g/L	45.36	37.260
	lbs/day	107,816.2	178,680.3

Table F-14.d. Effluent Limitations, Protection of Human Health – Carcinogens, Discharge Point No. 001

Parameter	Units	Average Monthly Effluent Limitations	
		≤ 0.285 MGD	> 0.285 MGD
Acrylonitrile	µg/L	8.4	6.900
	lbs/day	0.02	0.03
Aldrin	ng/L	1.848	1.518
	lbs/day	4.4×10^{-6}	7.3×10^{-6}
Benzene	µg/L	495.6	407.100
	lbs/day	1.2	1.9
Benzidine	µg/L	0.005796	0.005
	lbs/day	1.4×10^{-5}	2.3×10^{-6}
Beryllium	µg/L	2.772	2.277
	lbs/day	0.007	0.01
Bis(2-Chloroethyl)Ether	µg/L	3.78	3.105
	lbs/day	0.009	0.01
Bis(2-Ethylhexyl)Phthalate	µg/L	294	241.500
	lbs/day	0.7	1.2
Carbon Tetrachloride	µg/L	75.6	62.100
	lbs/day	0.2	0.3
Chlordane[1]	ng/L	1.932	1.587
	lbs/day	4.5×10^{-6}	7.6×10^{-6}
Chlorodibromethane	µg/L	722.4	593.400
	lbs/day	1.7	2.8
Chloroform	µg/L	10,920	8,970.000
	lbs/day	26.0	43.0
DDT[2]	ng/L	14.28	11.730
	lbs/day	3.4×10^{-5}	5.6×10^{-5}
1,4-Dichlorobenzene	µg/L	1,512	1,242.000
	lbs/day	3.6	5.9
3,3'-Dichlorobenzidine	µg/L	0.6804	0.559
	lbs/day	0.002	0.003
1,2-Dichloroethane	mg/L	2.352	1.932
	lbs/day	5.6	9.3
1,1-Dichloroethylene	mg/L	0.0756	0.062
	lbs/day	0.2	0.3
Dichlorobromomethane	mg/L	0.5208	0.428
	lbs/day	1.2	2.0
Dichloromethane	mg/L	37.8	31.050
	lbs/day	89.8	148.9
1,3-Dichloropropene	mg/L	0.7476	0.614
	lbs/day	1.8	2.9
Dieldrin	ng/L	3.36	2.760
	lbs/day	7.9×10^{-6}	1.3×10^{-5}
2,4-Dinitrotoluene	µg/L	218.4	179.400
	lbs/day	0.5	0.9
1,2-Diphenylhydrazine	µg/L	13.44	11.040
	lbs/day	0.03	0.05
Halomethanes[3]	mg/L	10.92	8.970
	lbs/day	26.0	43.0
Heptachlor	µg/L	0.0042	0.003
	lbs/day	10.0×10^{-6}	1.6×10^{-5}

Parameter	Units	Average Monthly Effluent Limitations	
		≤ 0.285 MGD	> 0.285 MGD
Heptachlor Epoxide	µg/L	0.00168	0.001
	lbs/day	4.0×10^{-6}	6.6×10^{-6}
Hexachlorobenzene	ng/L	17.64	14.490
	lbs/day	4.2×10^{-5}	6.9×10^{-5}
Hexachlorobutadiene	µg/L	1,176	966.000
	lbs/day	2.8	4.6
Hexachloroethane	µg/L	210	172.500
	lbs/day	0.5	0.8
Isophorone	g/L	0.06132	0.050
	lbs/day	145.7	241.5
N-Nitrosodimethylamine	µg/L	613.2	503.700
	lbs/day	1.5	2.4
N-nitrosodi-N-propylamine	µg/L	31.92	26.220
	lbs/day	0.08	0.1
N-Nitrosodiphenylamine	µg/L	210	172.500
	lbs/day	0.5	0.8
PAHs[4]	µg/L	0.7392	0.607
	lbs/day	0.002	0.003
PCBs[5]	ng/L	1.596	1.311
	lbs/day	3.8×10^{-6}	6.3×10^{-6}
TCDD Equivalents[6]	pg/L	0.3276	0.269
	lbs/day	7.8×10^{-10}	1.3×10^{-9}
1,1,2,2-Tetrachloroethane	mg/L	0.1932	0.159
	lbs/day	0.5	0.8
Tetrachloroethylene	mg/L	0.168	0.138
	lbs/day	0.4	0.7
Toxaphene	ng/L	17.64	14.490
	lbs/day	4.2×10^{-5}	6.9×10^{-5}
Trichloroethylene	µg/L	2,268	1,863.000
	lbs/day	5.4	8.9
1,1,2-Trichloroethane	mg/L	0.7896	0.649
	lbs/day	1.9	3.1
2,4,6-Trichlorophenol	µg/L	24.4	20.01
	lbs/day	0.06	0.1
Vinyl Chloride	µg/L	3,024	2,484.000
	lbs/day	7.2	11.9

[1] Chlordane shall mean the sum of chlordane-alpha, chlordane-gamma, chlordene-alpha, chlordene-gamma, nonachlor-alpha, nonachlor-gamma, and oxychlordane.

[2] DDT shall mean the sum of 4,4'-DDT; 2,4'-DDT; 4,4'-DDE; 2,4'-DDE; 4,4'-DDD; and 2,4'-DDD.

[3] Halomethanes shall mean the sum of bromoform, bromomethane (methyl bromide), chloromethane (methyl chloride), chlorodibromomethane, and dichlorobromomethane.

[4] PAHS (Polynuclear aromatic hydrocarbons) shall mean the sum of acenaphthylene; anthracene; 1,2-benzanthracene; 3,4-benzofluoranthene; benzo(k)fluoranthene; 1,12-benzoperylene; benzo(a)pyrene; chrysene; dibenzo(a,h)anthracene; fluorene; indeno(1,2,3-cd)pyrene; phenanthrene; and pyrene.

[5] PCBs (polychlorinated biphenyls) shall mean the sum of chlorinated biphenyls whose analytical characteristics resemble those of Aroclor-1016, Aroclor-1221, Aroclor-1232, Aroclor-1242, Aroclor-1248, Aroclor-1254, and Aroclor-1260.

[6] TCDD Equivalents shall mean the sum of those concentrations of chlorinated dibenzodioxins (2,3,7,8-CDDs) and chlorinated dibenzofurans (2,3,7,8-CDFs) multiplied by their respective toxicity factors, as listed in Appendix I of the Ocean Plan.

5. Whole Effluent Toxicity (WET)

Whole effluent toxicity limitations protect receiving water quality from the aggregate toxic effect of a mixture of pollutants in the effluent. WET tests measure the degree of response of exposed aquatic test organisms to an effluent. The WET approach allows dischargers to protect the narrative “no toxics in toxic amounts” criterion while implementing numeric criteria for toxicity. There are two types of WET tests – acute and chronic. An acute toxicity test is conducted over a short period and measures mortality. A chronic toxicity test is conducted over a longer period of time and may measure mortality, reproduction, and growth.

The Basin Plan specifies a narrative objective for toxicity, requiring that all waters be maintained free of toxic substances in concentrations that are toxic to, or which produce detrimental physiological responses in human, plant, animal, or aquatic life. Survival of aquatic organisms in surface waters subjected to a waste discharge or other controllable water quality conditions shall not be less than that for the same water body in areas unaffected by the waste discharge or for control water.

Toxicity testing is based on the minimum initial dilution factor for ocean waste discharges. The requirements for conducting testing for acute and chronic toxicity are explained in the Ocean Plan. According to the requirements, if the minimum initial dilution of the effluent falls below 100:1 at the edge of the mixing zone, then the dischargers shall conduct chronic toxicity testing. Since the applicable minimum initial dilutions of the effluent are 83 to 1 and 68 to 1, only chronic toxicity is necessary. Consistent with the previous Order, this Order requires the Discharger to monitor the discharge for chronic toxicity twice per year.

The Discharger may be required to develop and implement a Toxicity Reduction Evaluation (TRE) Workplan, as described in section VI.C.2.a of the Order. When monitoring measures WET in the effluent above the limitations established by the Order, the Discharger must resample, if the discharge is continuing, and retest. The Executive Officer will then determine whether to initiate enforcement action, whether to require the Discharger to implement a TRE, or to implement other measures.

D. Final Effluent Limitations

Final, technology-based and water quality-based effluent limitations established by the Order are discussed in the preceding sections of the Fact Sheet.

1. Satisfaction of Anti-Backsliding Requirements

Sections 402(o)(2) and 303(d)(4) of the CWA and federal regulations at 40 CFR 122.44(1) prohibit backsliding in NPDES permits. These anti-backsliding provisions require effluent limitations in a reissued permit to be as stringent as those in the previous permit, with some exceptions where limitations may be relaxed.

Effluent limitations from Order No. R3-2007-0002 are not retained for constituents for which RPA results indicated Endpoint 2 (arsenic and nickel). Effluent data and RPA procedures for the Ocean Plan, developed over the term of the previous Order represent new information not available during the renewal of the previous Order.

Parameters for which Endpoint 2 was concluded are determined not to have reasonable potential, effluent limitations have been removed in accordance with 40 CFR 122(l)(2)(i)(B). All effluent limitations from the previous Order, with the exception of arsenic and nickel, are retained in this Order.

This Order satisfies applicable anti-backsliding provisions of the Clean Water Act.

2. Satisfaction of Antidegradation Policy

Provisions of the Order are consistent with applicable anti-degradation policy expressed by NPDES regulations at 40 CFR 131.12 and by State Water Board Resolution No. 68-16. The limitations and conditions in this Order assure maintenance of the existing quality of receiving waters and do not authorize increased rates of discharge or increased pollutant loadings to the receiving water above that authorized by the previous Order.

3. Stringency of Requirements for Individual Pollutants

This Order contains both technology-based effluent limitations and WQBELs for individual pollutants. The technology-based effluent limitations consist of restrictions on BOD_5, TSS, COD, oil and grease, phenolic compounds, ammonia (as N), sulfide, total chromium, hexavalent chromium, and pH. Restrictions on BOD_5, TSS, COD, oil and grease, phenolic compounds, ammonia (as N), sulfide, total chromium, hexavalent chromium, and pH are discussed in section IV.B of this Fact Sheet. This Order's technology-based pollutant restrictions implement the minimum applicable federal technology-based requirements. These limitations are not more stringent than required by the CWA.

WQBELs have been scientifically derived to implement water quality objectives that protect beneficial uses. Both the beneficial uses and the water quality objectives have been approved pursuant to federal law and are the applicable federal water quality standards. The scientific procedures for calculating the individual WQBELs are based on the Ocean Plan, which was approved by USEPA on October 18, 2010. Most beneficial uses and water quality objectives contained in the Basin Plan and Ocean Plan were approved under State law and submitted to and approved by USEPA prior to May 30, 2000. Any water quality objectives and beneficial uses submitted to USEPA prior to May 30, 2000, but not approved by USEPA before that date, are nonetheless "applicable water quality standards for purposes of the CWA" pursuant to 40 CFR 131.21(c)(1). Collectively, this Order's restrictions on individual pollutants are no more stringent than required to implement the requirements of the CWA.

4. Summary of Final Effluent Limitations – Discharge Point No. 001

Final technology-based effluent limitations and WQBELs are summarized in Tables F-10 and F-11 (technology-based effluent limitations), and Tables F-14.a. through F-14.d. (WQBELs) of this Fact Sheet.

E. Interim Effluent Limitations – Not Applicable

F. Land Discharge Effluent Limitations and Specifications

The Discharge of non-contact stormwater to the evaporation/percolation basins shall not cause constituent concentrations in groundwater to exceed limits set forth in Title 22, Chapter 15, Articles 4, 4.5, 5, and 5.5 of the California Code of Regulations or cause a statistically significant increase in constituent concentrations underlying groundwaters, as determined by samples collected from wells upgradient and downgradient of the percolation ponds.

G. Reclamation Specifications – Not Applicable

V. Rationale for Receiving Water Limitations

A. Surface Water

Receiving water quality is a result of many factors, some unrelated to the discharge. This Order considers these factors and is designed to minimize the influence of the discharge on the receiving water. All receiving water limitations for Discharge Point No. 001 to the Pacific Ocean are based on the requirements of the Ocean Plan.

B. Groundwater – Not Applicable

VI. Rationale for Monitoring and Reporting Requirements

NPDES regulations at 40 CFR 122.48 require that all NPDES permits specify requirements for recording and reporting monitoring results. Water Code sections 13267 and 13383 also authorize the Central Coast Water Board to require technical and monitoring reports. The MRP, Attachment E of this Order, establishes monitoring and reporting requirements to implement federal and state requirements. The following provides the rationale for the monitoring and reporting requirements contained in the MRP for the Facility.

A. Influent Monitoring Requirements

Influent flow monitoring of contact storm runoff has been carried over from Monitoring and Reporting Program No. R3-2007-0002. Influent monitoring of contact storm runoff is required for the calculation of the additional mass loading credits for storm water provided in section IV.A.1.a of the Order.

B. Effluent Monitoring Requirements

Effluent monitoring is required to determine compliance with effluent limitations contained in this Order and to determine contributions, if any, by the Discharger to receiving water exceedances above water quality objectives. In addition, semi-annual effluent monitoring for Ocean Plan Table B pollutants have been established to evaluate reasonable potential of the Discharger's effluent to exceed water quality objectives/criteria during the next permit renewal process. Effluent Monitoring requirements have been carried over from Monitoring and Reporting Program No. R3-2007-0002 with one revision. Effluent monitoring for TCDD equivalents has been

increased from twice a year to quarterly because the effluent demonstrates reasonable potential to exceed or contribute to an exceedance of water quality objectives and additional monitoring is necessary to evaluate compliance with the applicable effluent limitations.

In the ROWD, the Discharger requested that the testing requirements for tributyltin be eliminated because semi-annual monitoring has resulted in non-detects from 2000 – 2011, and engineering knowledge supports the analytical determinations. The Discharger further states that laboratories qualified to test for this constituent are limited. During the last 5 years, reported tributyltin results for the Discharger's effluent have ranged from <0.002 µg/L to <0.03 µg/L. To exceed applicable WQOs for tributyltin after mixing considering the most conservative dilution of 68:1, the end-of-pipe effluent concentration would have to be greater than 0.097 µg/L. Effluent concentrations of tributyltin have not been observed at these levels, however based on the procedures contained in Appendix VI of the Ocean Plan, an effluent limitation and monitoring requirements must be maintained for tributyltin due to an RPA result of endpoint 3. However, based on the available data and information, and the request by the Discharger, monitoring for tributyltin has been reduced to once during the term of the Order.

C. Whole Effluent Toxicity Testing Requirements

Whole effluent toxicity (WET) limitations protect receiving water quality from the aggregate toxic effect of a mixture of pollutants in the effluent. Chronic toxicity testing is conducted over a long period of time and may measure mortality, reproduction, and/or growth. This Order retains limitations for chronic toxicity and semi-annual monitoring requirements for chronic toxicity for Discharge Point No. 001.

E. Land Discharge Monitoring Requirements – Not Applicable

F. Reclamation Monitoring Requirements – Not Applicable

G. Receiving Water Monitoring Requirements

1. Bottom Sediment Monitoring

Bottom sediment monitoring is required to assess the effects of the discharge on the receiving water (Pacific Ocean) sediment within the zone of initial dilution and compliance with water quality objectives contained in the Ocean Plan. The monitoring requirements for bottom sediment have been carried over from Monitoring and Reporting Program No. R3-2007-0002.

2. Receiving Water Characteristics Monitoring

Receiving water monitoring has been established during the term of the permit so that data will be available in the future to evaluate dilution during permit renewals if changes are made to the current operation of the Facility.

3. Benthic Biota Monitoring

Monitoring of benthic biota is required to assess the effects of the discharge on the receiving water (Pacific Ocean) local biota within the zone of initial dilution and compliance with water quality objectives contained in the Ocean Plan. The monitoring requirements for benthic biota have been carried over from Monitoring and Reporting Program No. R3-2007-0002.

H. Other Monitoring Requirements

1. Ocean Outfall Inspection

This Order retains the requirement of the previous Order to conduct annual visual inspections of the outfall and diffuser structure and provide a report of this inspection to the Central Coast Water Board regarding the system's physical integrity.

2. Raw Material Feed Monitoring

Monitoring of raw hydrocarbon material feed is required to assess the production level at the Facility during the next permit renewal for the calculations of technology-based effluent limitations. The monitoring requirements for raw material feed have been carried over from Monitoring and Reporting Program No. R3-2007-0002.

VII. Rationale for Provisions

A. Standard Provisions

Standard Provisions, which apply to all NPDES permits in accordance with 40 CFR 122.41, and additional conditions applicable to specified categories of permits in accordance with 40 CFR 122.42, are provided in Attachment D to the Order.

NPDES regulations at 40 CFR 122.41(a)(1) and (b - n) establish conditions that apply to all state-issued NPDES permits. These conditions must be incorporated into the permits either expressly or by reference. If incorporated by reference, a specific citation to the regulations must be included in the Order. 40 CFR 123.25(a)(12) allows the State to omit or modify conditions to impose more stringent requirements. In accordance with 40 CFR123.25, this Order omits federal conditions that address enforcement authority specified in 40 CFR 122.41(j)(5) and (k)(2), because the enforcement authority under the Water Code is more stringent. In lieu of these conditions, this Order incorporates by reference Water Code section 13387(e).

B. Special Provisions

1. Reopener Provisions

The Order may be modified in accordance with the requirements set forth at 40 CFR 122 and 124, to include appropriate conditions or limits based on newly available information, or to implement any, new State WQOs that are approved by the USEPA. As effluent is further characterized through additional monitoring, and if a need for additional effluent limitations becomes apparent after additional effluent characterization, the Order will be reopened to incorporate such limitations.

2. Special Studies and Additional Monitoring Requirements

a. Toxicity Reduction Requirements

The requirement to perform a TRE, if the Executive Officer determines it to be appropriate, is retained from Order No. R3-2007-0002. When toxicity monitoring measures chronic toxicity in the effluent above the limitation established by the Order, the Discharger is required to increase monitoring frequency to once per week, or as otherwise approved in advance by the Executive Officer, and submit the results within 15 days of the conclusion of each test to the Central Coast Water Board. When all monitoring results are available, the Executive Officer can determine whether to initiate enforcement action, whether to require the Discharger to implement TRE requirements, or whether other measures are warranted.

3. Best Management Practices and Pollution Prevention

a. Best Management Practices

The Discharger implements a Best Management Plan on an ongoing basis to ensure that no contaminated storm water leaves the Facility's property and enters surrounding surface waters. The BMP plan was required originally as a provision of Order No. R3-2002-0010 and continued in Order No. R3-2007-0002. This Order continues this requirement for the Discharger to implement and update the BMP plan which prevents, or minimizes the potential for, release of toxic substances from ancillary activities to the waters of the United States through plant site runoff, spillage, or leaks, sludge or waste disposal, or drainage from raw material storage.

b. Pollutant Minimization Program

The 2009 Ocean Plan establishes guidelines for the Pollutant Minimization Program (PMP). At the time of the proposed adoption of this Order, no known evidence was available that would require the Discharger to immediately develop and conduct a PMP. The Central Coast Water Board will notify the Discharger in writing if such a program becomes necessary. The 2009 Ocean Plan PMP language is included in this Order to provide guidance in the event that a PMP must be developed and implemented by the Discharger.

4. Construction, Operation, and Maintenance Specifications – Not Applicable

5. Special Provisions for Municipal Facilities (POTWs Only) – Not Applicable

6. Other Special Provisions – Not Applicable

7. Compliance Schedules – Not Applicable

VIII. Public Participation

The Central Coast Water Board is considering the issuance of WDRs that will serve as a NPDES permit for the Santa Maria Refinery. As a step in the WDR adoption process, the Central Coast Water Board staff has developed tentative WDRs. The Central Coast Water Board encourages public participation in the WDR adoption process.

A. Notification of Interested Parties

The Central Coast Water Board has notified the Discharger and interested agencies and persons of its intent to prescribe waste discharge requirements for the discharge and has provided them with an opportunity to submit their written comments and recommendations. Notification was provided through publication in the local newspaper, posting at the Facility and Discharger offices, and/or publication on the Discharger's website.

B. Written Comments

Central Coast Water Board staff determinations are tentative. Interested persons are invited to submit written comments concerning these tentative WDRs. Comments must be submitted either in person or by mail to the Executive Office at the Central Coast Water Board at the address above on the cover page of this Order.

To receive a full response from the Central Coast Water Board staff and to be considered by the Central Coast Water Board, written comments should be received at the Central Coast Water Board offices by 5:00 p.m. on **October 4, 2013.**

C. Public Hearing

The Central Coast Water Board will hold a public hearing on the tentative WDRs during its regular Board meeting on the following date and time and at the following location:

Date:	**December 5, 2013**
Time:	**8:30 a.m.**
Location:	**Central Coast Water Board Offices** **895 Aerovista Dr.** **San Luis Obispo, CA 93401**

Interested persons are invited to attend. At the public hearing, the Central Coast Water Board will hear testimony, if any, pertinent to the discharge, WDRs, and permit. Oral

testimony will be heard; however, for accuracy of the record, important testimony should be in writing.

Please be aware that dates and venues may change. Our Web address is http://www.waterboards.ca.gov/centralcoast/ where you can access the current agenda for changes in dates and locations.

D. Waste Discharge Requirements Petitions

Any aggrieved person may petition the State Water Resources Control Board to review the decision of the Central Coast Water Board regarding the final WDRs. The petition must be submitted within 30 days of the Central Coast Water Board's action to the following address:

State Water Resources Control Board
Office of Chief Counsel
P.O. Box 100, 1001 I Street
Sacramento, CA 95812-0100

E. Information and Copying

The ROWD, related documents, tentative effluent limitations and special provisions, comments received, and other information are on file and may be inspected at the address above at any time between 8:30 a.m. and 4:45 p.m., Monday through Friday. Copying of documents may be arranged through the Central Coast Water Board by calling (805) 549-3147.

F. Register of Interested Persons

Any person interested in being placed on the mailing list for information regarding the WDRs and NPDES permit should contact the Central Coast Water Board, reference this facility, and provide a name, address, and phone number.

G. Additional Information

Requests for additional information or questions regarding this Order should be directed to Katie DiSimone at (805) 542-4638 or Katie.DiSimone@waterboards.ca.gov.

ATTACHMENT G – TECHNOLOGY BASED EFFLUENT LIMITATIONS CALCULATIONS

CALCULATIONS FOR PRODUCTION-BASED
BPT, BCT, AND BAT EFFLUENT LIMITATIONS
FOR
PHILLIPS 66 COMPANY
SANTA MARIA FACILITY

References:

1) 40 CFR Part 419 Subpart B Effluent Limitations Guidelines for the Petroleum Refining Point Source Category (Cracking Subcategory)
2) NPDES Application for Permit Reissuance (March 2012)
3) Refinery Production Data October 2007 – December 2011, provided by the Facility

Production-Based Effluent Limitations

STEP 1: Determine the size factor based on the refinery feedstock rate. Based on 40 CFR Part 419 Subpart B, a total refinery throughput of 44.4 kbbl/d results in a

SIZE FACTOR = 0.95

STEP 2: Determine the process configuration based on the process rates:

Process	Process Feedstock Rate (kbbl/d)	Fraction of Total Throughput	Weight Factor	Process Configuration
CRUDE:				
Atmospheric Distillation	44.4	1		
Vacuum Crude Distillation	32.0	0.72		
TOTAL	76.4	1.72	1	1.72
CRACKING & COKING:				
Delayed Coking	23.2	0.52		
TOTAL	23.2	0.52	6	3.12
TOTAL PROCESS CONFIGURATION =				4.84

(kbbl/d = Thousand Barrels per day)

STEP 3: Determine the process factor. Based on 40 CFR Part 419 Subpart B, a total process configuration of 4.84 results in a

PROCESS FACTOR = 0.88

STEP 4: Based on 40 CFR Parts 419.22(a), 419.23(a), and 419.24(a), the BPT/BAT/BCT effluent limit is equal to

(THROUGHPUT) X (SIZE FACTOR) X (PROCESS FACTOR) X (EFFLUENT LIMIT FACTOR)

EFFLUENT LIMIT (as lbs/day) = (44.4)(0.95)(0.88)(Effluent Limit Factor)
= (37.12)(Effluent Limit Factor)

Pollutant	Effluent Limit Factor in 40 CFR 419 Subpart B						Multi-plier	Final Limit Calculated						Final Limit	
	BPT		BAT		BCT			BPT		BAT		BCT			
	Daily Max	30-d Avg	Daily Max	30-d Avg	Daily Max	30-d Avg		Daily Max	30-d Avg	Daily Max	30-d Avg	Daily Max	30-d Avg	Daily Max	30-d Avg
	lb/kbbl	lb/kbbl	lb/kbbl	lb/kbbl	lb/kbbl	lb/kbbl		lb/day	lb/day	lb/day	lb/day	lb/day	lb/day	lb/day	lb/day
BOD_5	9.9	5.5			9.9	5.5	37.12	367	204			367	204	367	204
TSS	6.9	4.4			6.9	4.4	37.12	256	163			256	163	256	163
COD	74	38.4	74	38.4			37.12	2,747	1,425	2,747	1,425			2,747	1,425
O&G	3	1.6			3	1.6	37.12	111	59			111	59	111	59.4
Phenols (4AAP)[1]	0.074	0.036					37.12	2.7	1.3					2.7	1.3
NH_3-N[2]	6.6	3	6.6	3			37.12	245	111	245	111			245	111
Sulfide	0.065	0.029	0.065	0.029			37.12	2.4	1.1	2.4	1.1			2.41	1.08
Total Cr	0.15	0.088					37.12	5.6	3.3	5.6	3.3			5.6	3.3
Hex Cr	0.012	0.0056					37.12	0.4	0.2					0.4	0.2

[1]The BPT limits for these constituents are applicable only if they are more stringent than BAT limits (see STEP 5) below).

STEP 5: Calculate BAT limits pursuant to 40 CFR Section 419.23, for phenolic compounds (4AAP), total and hexavalent chromium. The effluent limit is equal to the sum of the products of each effluent limitation factor times the applicable process feedstock rate.

Pollutant	Process Category	BAT Effluent Limit Factors (lb/kbbl)		Feedstock (kbbl/d)	Effluent Limitation (lbs/day)	
		Daily Max.	30-d Average		Daily Max.	30-d Average
Phenolic Compounds (4AAP)	Crude	0.013	0.003	76.4	1.0	0.2
	Cracking & Coking	0.147	0.036	23.2	3.4	0.8
				TOTAL	**4.4**	**1.06**
Total Chromium	Crude	0.011	0.004	76.4	0.8	0.3
	Cracking & Coking	0.119	0.041	23.2	2.8	0.9
				TOTAL	**3.60**	**1.26**
Hexavalent Chromium	Crude	0.0007	0.0003	76.4	0.05	0.02
	Cracking & Coking	0.0076	0.0034	23.2	0.18	0.08
				TOTAL	**0.230**	**0.102**

STEP 6: Compare BAT limitations for phenolic compounds (4AAP), total chromium, and hexavalent chromium with BPT limitations.

Except for the effluent limitations for total chromium and hexavalent chromium, and the daily maximum effluent limitation for phenolic compounds, all the above BAT limitations are more stringent than the BPT limitations calculated in STEP 4. Therefore, limitations for total chromium and hexavalent chromium, and the daily maximum effluent limitation for phenolic compounds have been based on BPT criteria (the monthly average effluent limitation for phenolic compounds has been based on BAT criteria). All of the effluent limitations for the remaining parameters have been based on BAT criteria. It should be noted that the technology based-effluent limitations for ammonia (as N) contained in the Order are not calculated effluent limitations contained above. The ammonia limitations contained in the Order are based on the finding that the Santa Maria Refinery is fundamentally different from those used by USEPA to develop ELGs for the petroleum refining point source category. Technology based-effluent limitations for ammonia (as N) are applied as the fundamentally different factors (FDF) limitations (30-day – 220 lbs/day; daily maximum – 290 lbs/day) and not the effluent limitations calculated above.

In addition, the criteria for both BPT and BCT require that the effluent remain between a pH of 6.0 and 9.0 standard units.