Attachment B. Discharge Facility Treatment Process Diagram

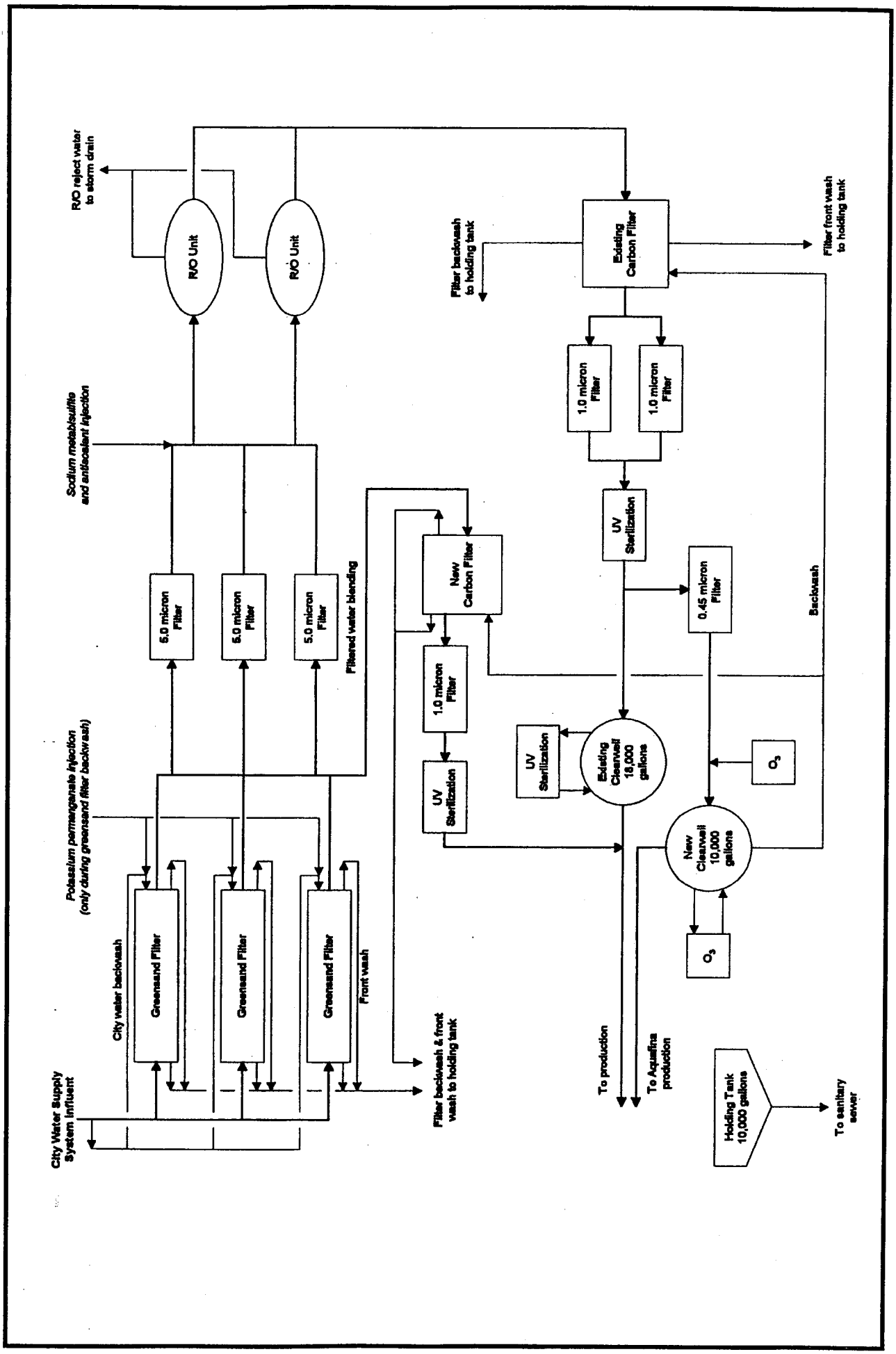

09/24/01

1371-101.al