California Regional Water Quality Control Board
North Coast Region
Geoffrey M. Hales, Chairman

Linda S. Adams
Secretary for Environmental Protection

www.waterboards.ca.gov/northcoast
5550 Skylane Boulevard, Suite A, Santa Rosa, California 95403
Phone: (877) 721-9203 (toll free) • Office: (707) 576-2220 • FAX: (707) 523-0135

Arnold Schwarzenegger
Governor

ORDER NO. R1-2010-0017
NPDES NO. CA0023060
WDID NO. 1B80078OMEN

WASTE DISCHARGE REQUIREMENTS AND MASTER RECLAMATION PERMIT FOR THE CITY OF WILLITS WASTEWATER TREATMENT FACILITY MENDOCINO COUNTY

The following Discharger is subject to waste discharge requirements as set forth in this Order:

Table 1. Discharger Information

Discharger	City of Willits
Name of Facility	City of Willits Wastewater Treatment Facility
Facility Address	300 N. Lenore Street
	Willits, CA 95490
	Mendocino County
The U.S. Environmental Protection Agency (USEPA) and the Regional Water Quality Control Board have classified this discharge as a major discharge.	

The discharge by the City of Willits from the discharge points identified below is subject to waste discharge requirements as set forth in this Order:

Table 2. Discharge Location

Discharge Point	Effluent Description	Discharge Point Latitude	Discharge Point Longitude	Receiving Water
001	Secondary Treated Municipal Wastewater	39° 25’ 14” N	123° 20’ 24” W	Outlet Creek
		Reclamation / Irrigation Use on Neighboring Agricultural Land		Groundwater
002	Secondary Treated Municipal Wastewater	39° 25’ 14” N	123° 20’ 24” W	Groundwater
003	Enhanced Secondary Treated Municipal Wastewater	39° 25’ 38” N	123° 20’ 38” W	Outlet Creek
004	Enhanced Secondary Treated Municipal Wastewater	Reclamation / Irrigation Use on Neighboring Agricultural Land		Groundwater

Table 3. Administrative Information

This Order was adopted by the Regional Water Quality Control Board on:	**June 10, 2010**
This Order shall become effective on:	**August 1, 2010**
This Order shall expire on:	**August 1, 2015**
The Discharger shall file a Report of Waste Discharge in accordance with title 23, California Code of Regulations, as application for issuance of new waste discharge requirements no later than:	**February 1, 2015**

IT IS HEREBY ORDERED, that this Order supersedes Order No. R1-2001-71 upon the effective date specified in Table 3. This action in no way prevents the Regional Water Quality Control Board from taking any enforcement action for past violations of the previous permit. If any part of this Order is subject to a temporary stay of enforcement, unless otherwise specified, the Discharger shall comply with the analogous portions of Order No. R1-2001-71, which shall remain in effect for all purposes during the pendency of the stay.

I, Catherine Kuhlman, Executive Officer, do hereby certify that this Order with all attachments is a full, true, and correct copy of an Order adopted by the California Regional Water Quality Control Board, North Coast Region, on **July 15, 2010.**

_____

Catherine Kuhlman, Executive Officer

Table of Contents

I. Facility Information 5
II. Findings 5
III. Discharge Prohibitions 12
IV. Effluent Limitations and Discharge Specifications 13
A. Effluent Limitations for Existing WWTF 13
1. Effluent Limitations – Discharge Point 001 13
B. Effluent Limitations for New WWTF 15
1. Effluent Limitations – Discharge Point 002 15
2. Effluent Limitations – Discharge Point 003 16
C. Land Discharge Specifications 17
D. Reclamation Specifications 18
1. Reclamation / Recycling Requirements 18
2. Effluent Limitations – Discharge Point 004 18
E. Other Requirements 18
V. Receiving Water Limitations 19
A. Surface Water Limitation 19
B. Groundwater Limitations 21
VI. Provisions 22
A. Standard Provisions 22
B. Monitoring and Reporting Program (MRP) Requirements 22
C. Special Provisions 23
1. Reopener Provisions 23
2. Special Studies, Technical Reports and Additional Monitoring Requirements 24
3. Best Management Practices and Pollution Prevention 27
4. Construction, Operation and Maintenance Specifications 28
5. Septage Handling Requirements 29
6. Special Provisions for Municipal Facilities (POTWs Only) 29
7. Statewide General WDRs for Discharge of Biosolids to Land 33
8. Other Special Provisions 33
VII. Compliance Determination 34

List of Tables

Table 1. Discharger Information 1
Table 2. Discharge Location 1
Table 3. Administrative Information 2
Table 4. Facility Information 5
Table 5. Basin Plan Beneficial Uses 9
Table 6. Effluent Limitations for Existing WWTF – Discharge Point 001 14
Table 7. Effluent Limitations for New WWTF – Discharge Point 002 15
Table 8. Effluent Limitations for New WWTF – Discharge Point 003 16

List of Attachments

Attachment A – Definitions A-1
Attachment B – Map A-1
Attachment C – Flow Schematic B-1
Attachment D – Standard Provisions C-1
Attachment E – Monitoring and Reporting Program D-1
Attachment F – Fact Sheet E-1
Attachment G 1 – Final Ammonia Average Monthly Effluent LImitations F-1
Attachment G-2 – Final Ammonia Maximum Daily Effluent Limitations G-2
Attachment H – Water Reclamation Requirements and Provisions G-1

I. FACILITY INFORMATION

The following Discharger is subject to waste discharge requirements as set forth in this Order:

Table 4. Facility Information

Discharger	City of Willits
Name of Facility	City of Willits Wastewater Treatment Facility
Facility Address	300 N. Lenore Street
	Willits, CA 95490
	Mendocino County
Facility Contact, Title, and Phone	JC England, Chief Plant Operator, (707) 459-5028
Mailing Address	111 E. Commercial Street, Willits, CA 95490
Type of Facility	Publicly Owned Treatment Works (POTW)
Existing Facility Design Flow	1.3 million gallons per day (mgd) Average Dry Weather Flow (ADWF) 3.0 mgd Peak Wet Weather Flow Treatment Capacity (PWWF)
New Facility Design Flow	7.0 mgd Average Monthly Flow
New Facility Permitted Flow	4.0 mgd Average Monthly Flow

II. FINDINGS

The California Regional Water Quality Control Board, North Coast Region (hereinafter Regional Water Board), finds:

A. Background. The City of Willits (hereinafter Discharger) is currently discharging pursuant to Order No. R1-2001-71 and National Pollutant Discharge Elimination System (NPDES) Permit No. CA0023060. The Discharger submitted a Report of Waste Discharge, dated March 30, 2006, and applied for NPDES permit renewal to operate the existing WWTF. A supplemental ROWD was submitted on December 8, 2009, proposing construction of a new wastewater treatment facility (WWTF) that is designed to discharge an average annual flow up to 7.0 mgd. However, the Discharger has requested a permitted flow of only 4.0 mgd based on projected needs through 2025. Until the new WWTF is constructed and operational, the Discharger will continue to operate the existing WWTF, which has an ADWF capacity of 1.3 mgd and a PWWF capacity of 3.0 mgd, under the terms set out in section IV.A of this Order. The application was deemed complete on March 11, 2010.

For the purposes of this Order, references to the “discharger” or “permittee” in applicable federal and State laws, regulations, plans, or policy are held to be equivalent to references to the Discharger herein

B. Facility Description. The Discharger owns and operates a municipal WWTF and associated wastewater collection, reclamation, and disposal facilities that serve a

population of 5,300. The Willits WWTF receives untreated domestic wastewater from two additional collection systems in the adjacent communities of Brooktrails and Meadowbrook Manor, which serve populations of 4,000 and 200 respectively. In total, the Willits WWTF serves a population of 9,500 residential and commercial users. The existing treatment system includes headworks with grit removal, two extended aeration basins, settling in a circular clarifier, disinfection in a chlorine contact chamber, and dechlorination. Wet weather flows exceeding secondary treatment capability are temporarily diverted to a series of up to five holding basins providing 16 million gallons of combined storage capacity. The existing WWTF is designed to treat an ADWF of 1.3 mgd with peak flows up to 3.0 mgd.

The Discharger plans to construct a new WWTF within the effective period of this Order. The new WWTF system will provide enhanced secondary level treatment of wastewater. The new WWTF will include a septage receiving stations prior to the existing headworks, extended aeration/activated sludge processes with nutrient removal, ultraviolet (UV) disinfection, followed by enhanced effluent polishing within a new treatment wetland (aka enhancement wetland). In addition to enhanced treatment, the wetland will provide storage to accommodate varying seasonal discharge requirements.

Currently, from October 1 through May 14, treated wastewater from the existing WWTF may be discharged at Discharge Point 001 to Outlet Creek, just below the confluence of Broaddus and Baechtel Creeks. Upon construction of the new WWTF, Discharge Point 001 will be abandoned and from October 1 through May 14, treated wastewater from the new WWTF may be discharged from the end of the treatment wetland at Discharge Point 003 to Outlet Creek, approximately 2,700 feet downstream of Discharge Point 001. Outlet Creek is a water of the United States, and a tributary to the Eel River within the Upper Main Eel River Watershed. From May 15 through September 30 and all other seasonally appropriate times, treated wastewater is recycled as spray irrigation on 200 acres of privately owned pasture located nearby.

Attachment B provides a map of the area around the facility. Attachment C provides flow schematics of the new WWTF including the new enhancement wetland as well as the existing WWTF.

C. Legal Authorities. This Order is issued pursuant to section 402 of the federal Clean Water Act (CWA) and implementing regulations adopted by the U.S. Environmental Protection Agency (USEPA) and chapter 5.5, division 7 of the California Water Code (commencing with section 13370). It shall serve as a NPDES permit for point source discharges from this facility to surface waters. This Order also serves as Waste Discharge Requirements (WDRs) for discharges to land and a Master Reclamation Permit pursuant to article 4, chapter 4, division 7 of the Water Code (commencing with section 13260 and 13520, respectively).

D. Background and Rationale for Requirements. The Regional Water Board developed the requirements in this Order based on information submitted as part of the application, through monitoring and reporting programs, and other available information. The Fact Sheet (Attachment F), which contains background information and rationale for Order requirements, is hereby incorporated into this Order and constitutes part of the Findings for this Order. Attachments A through E and G through H are also incorporated into this Order.

E. California Environmental Quality Act (CEQA). Under Water Code section 13389, this action to adopt an NPDES permit is exempt from the provisions of CEQA, Public Resources Code sections 21100-21177.

This action also involves the adoption of WDRs for irrigation using treated effluent. For the portion of the permit that addresses WDRs for discharges to land, the Discharger certified an Environmental Impact Report (State Clearing House #2001032016) stating that the land disposal/reclamation areas of the project would comply with regulatory criteria, not have any significant effects or result in cumulative impacts on groundwater quality.

As a responsible agency under CEQA, the Regional Water Board is required to consider the final certified CEQA document(s) and reach its own conclusions on whether and how to approve a permit for the Discharger's reclamation plan. Prior to approving this Order, the Regional Water Board considered the environmental effects of the Discharger's reclamation plan as identified in the certified final EIR. In considering alternatives and mitigation measures, the Regional Water Board only has the responsibility for mitigating or avoiding those direct or indirect environmental effects of those parts of the reclamation plan that are within its jurisdiction to approve. (Public Resources Code, Section 21002.1(d); California Code of Regulations, title 14, section 15096(g) and (h)). The Regional Water Board has required, as a condition of this Order, mitigation measures for those potentially significant impacts over which the Regional Water Board has authority. The Regional Water Board finds that with mitigation, all potentially significant impacts of the City's reclamation plan will be reduced to levels of insignificance, as described below.

Uses of recycled water for irrigation of agricultural operations under the seasonal irrigation option have the potential to create or contribute to incidental offsite runoff and discharge to adjacent drainages. Therefore, discharges of irrigation runoff could reach natural surface waters and potentially cause incidental changes in water quality conditions. The potential for such occurrences of offsite runoff from irrigated areas is considered low because the City must develop a detailed engineering report under the applicable title 22 regulations and Irrigation Management Plans for each use site that identifies the operational controls and environmental protection measures that will be implemented to protect surface water and groundwater quality. In addition, the projected effluent quality indicates that the anticipated constituent concentrations would

be low and the small quantity of incidental runoff events would not be expected to substantially impair receiving waters. This impact would be less than significant.

In order to allow reclamation at sites not addressed in the existing EIR, the Discharger will need to conduct an environmental analysis of any potential impacts, and will act as the lead agency for CEQA. The Discharger must ensure all reclamation activities comply with Attachment H – Water Reclamation Requirements and Provisions, of this Order.

F. **Technology-based Effluent Limitations.** Section 301(b) of the CWA and implementing USEPA permit regulations at section 122.44, title 40 of the Code of Federal Regulations (40 CFR 122.44), require that permits include conditions meeting applicable technology-based requirements at a minimum, and any more stringent effluent limitations necessary to meet applicable water quality standards. The discharge authorized by this Order must meet minimum federal technology-based requirements based on Secondary Treatment Standards at 40 CFR Part 133 and/or Best Professional Judgment (BPJ) in accordance with 40 CFR 125.3. A detailed discussion of the technology-based effluent limitations development is included in the Fact Sheet (Attachment F).

G. **Water Quality-Based Effluent Limitations.** Section 301(b) of the CWA and 40 CFR 122.44(d) require that permits include limitations more stringent than applicable federal technology-based requirements where necessary to achieve applicable water quality standards.

40 CFR 122.44(d)(1)(i) mandates that permits include effluent limitations for all pollutants that are or may be discharged at levels that have the reasonable potential to cause or contribute to an exceedance of a water quality standard, including numeric and narrative objectives within a standard. Where reasonable potential has been established for a pollutant, but there is no numeric criterion or objective for the pollutant, water quality-based effluent limitations (WQBELs) must be established using: (1) USEPA criteria guidance under CWA section 304(a), supplemented where necessary by other relevant information; (2) an indicator parameter for the pollutant of concern; or (3) a calculated numeric water quality criterion, such as a proposed state criterion or policy interpreting the state's narrative criterion, supplemented with other relevant information, as provided in 40 CFR 122.44(d)(1)(vi).

H. **Water Quality Control Plans.** The Regional Water Board adopted a Water Quality Control Plan for the North Coast Region (hereinafter Basin Plan) that designates beneficial uses, establishes water quality objectives, and contains implementation programs and policies to achieve those objectives for all waters addressed through the plan. The Basin Plan at page 2-1 states that the beneficial uses of any specifically identified water body generally apply to its tributary streams. The Basin Plan does not specifically identify beneficial uses for Outlet Creek, but does identify present and potential uses for the Eel River, to which Outlet Creek is tributary. In addition, the Basin

Plan implements State Water Resources Control Board (State Water Board) Resolution No. 88-63, which established state policy that all waters, with certain exceptions, should be considered suitable or potentially suitable for municipal or domestic supply. Thus, as discussed in detail in the Fact Sheet, beneficial uses applicable to areal groundwater and Outlet Creek are as follows:

Table 5. Basin Plan Beneficial Uses

	Receiving Water Name Discharge Points	
Beneficial Use (s)	**Outlet Creek EFF-001 EFF-002 EFF-003**	**Groundwater EFF-002 EFF-004**
Municipal and Domestic Water Supply (MUN)	E	E
Agricultural Supply (AGR)	E	E
Industrial Service Supply (IND)	E	E
Industrial Process Supply (PRO)	P	P
Groundwater Recharge (GWR)	E	---
Freshwater Replenishment (FRESH)	---	E
Navigation (NAV)	E	---
Hydropower Generation (POW)	P	---
Water Contact Recreation (REC-1)	E	---
Non-contact Water Recreation (REC-2)	E	---
Commercial and Sport Fishing (COMM)	E	---
Warm Freshwater Habitat (WARM)	E	---
Cold Freshwater Habitat (COLD)	E	---
Wildlife Habitat (WILD)	E	---
Preservation of Rare, Threatened or Endangered Species (RARE)	E	---
Migration of Aquatic Organisms (MIGR)	E	---
Spawning, Reproduction, and/or Early Development (SPWN)	E	---
Aquaculture (AQUA)	E	P
Native American Culture (CUL)	E	E

Requirements of this Order implement the Basin Plan.

In June 2007, USEPA provided final approval of the list of impaired water bodies prepared by the State pursuant to CWA section 303(d), which requires identification of specific water bodies where it is expected that water quality standards will not be met after implementation of technology-based effluent limitations on point sources. The Upper Main Fork of the Eel River is 303(d) listed as impaired by sedimentation/siltation and temperature. Pursuant to CWA section 303(d), the Regional Water Board must adopt Total Maximum Daily Loads (TMDLs) to address impairing pollutants in 303(d) listed waters, and then implement TMDLs in NPDES permits. TMDLs establish the maximum quantity of a given pollutant that can be added to a water body from all sources without exceeding the applicable water quality standard for that pollutant and determine wasteload allocations (the portion of a TMDL allocated to existing and future

point sources) for point sources and load allocations (the portion of a TMDL attributed to existing and future non-point sources) for non-point sources.

In December 2007, USEPA established a technical TMDL for sediment and temperature in the Upper Main Eel River and tributaries. This Order is consistent with the technical TMDL.

I. **National Toxics Rule (NTR) and California Toxics Rule (CTR).** USEPA adopted the NTR on December 22, 1992, and later amended it on May 4, 1995 and November 9, 1999. About 40 criteria in the NTR applied in California. On May 18, 2000, USEPA adopted the CTR. The CTR promulgated new toxics criteria for California and, in addition, incorporated the previously adopted NTR criteria that were applicable in the state. The CTR was amended on February 13, 2001. These rules contain water quality criteria for priority pollutants.

J. **State Implementation Policy.** On March 2, 2000, the State Water Board adopted the Policy for Implementation of Toxics Standards for Inland Surface Waters, Enclosed Bays, and Estuaries of California (State Implementation Policy or SIP). The SIP became effective on April 28, 2000 with respect to the priority pollutant criteria promulgated for California by the USEPA through the NTR and to the priority pollutant objectives established by the Regional Water Board in the Basin Plan. The SIP became effective on May 18, 2000 with respect to the priority pollutant criteria promulgated by the USEPA through the CTR. The State Water Board adopted amendments to the SIP on February 24, 2005 that became effective on July 13, 2005. The SIP establishes implementation provisions for priority pollutant criteria and objectives and provisions for chronic toxicity control. Requirements of this Order implement the SIP.

K. **Compliance Schedules and Interim Requirements.** The State Water Board adopted Resolution No. 2008-0025 on April 15, 2008, titled *Policy for Compliance Schedules in National Pollutant Discharge Elimination System Permits*, which includes compliance schedule policies for pollutants that are not addressed by the SIP. This Policy became effective on August 27, 2008. This Order does not include compliance schedules or interim effluent limitations.

L. **Alaska Rule.** On March 30, 2000, USEPA revised its regulation that specifies when new and revised state and tribal water quality standards (WQS) become effective for CWA purposes. (40 CFR 131.21; 65 Fed. Reg. 24641 (April 27, 2000).) Under the revised regulation (also known as the Alaska rule), new and revised standards submitted to USEPA after May 30, 2000, must be approved by USEPA before being used for CWA purposes. The final rule also provides that standards already in effect and submitted to USEPA by May 30, 2000 may be used for CWA purposes, whether or not approved by USEPA.

M. **Stringency of Requirements for Individual Pollutants.** This Order contains both technology-based effluent limitations and WQBELs for individual pollutants. The technology-based effluent limitations consist of restrictions on 5-day biochemical

oxygen demand (BOD_5) and total suspended solids (TSS). Restrictions on these pollutants are discussed in section IV.B.2 of the Fact Sheet (Attachment F). This Order's technology-based pollutant restrictions implement the minimum, applicable federal technology-based requirements. In addition, this Order contains effluent limitations more stringent than the minimum, federal technology-based requirements that are necessary to meet water quality standards.

WQBELs have been scientifically derived to implement water quality objectives that protect beneficial uses. Both the beneficial uses and the water quality objectives have been approved pursuant to federal law and are the applicable federal water quality standards. To the extent that toxic pollutant WQBELs were derived from the CTR, the CTR is the applicable standard pursuant to 40 CFR 131.38. The scientific procedures for calculating the individual WQBELs for priority pollutants are based on the CTR-SIP, which was approved by USEPA on May 18, 2000. All beneficial uses and water quality objectives contained in the Basin Plan were approved under state law and submitted to and approved by USEPA prior to May 30, 2000. Any water quality objectives and beneficial uses submitted to USEPA prior to May 30, 2000, but not approved by USEPA before that date, are nonetheless "applicable water quality standards for purposes of the CWA" pursuant to 40 CFR 131.21(c)(1). Collectively, this Order's restrictions on individual pollutants are no more stringent than required to implement the requirements of the CWA.

N. Antidegradation Policy. 40 CFR 131.12 requires that the state water quality standards include an antidegradation policy consistent with the federal policy. The State Water Board established California's antidegradation policy in State Water Board Resolution No. 68-16. Resolution No. 68-16 incorporates the federal antidegradation policy where the federal policy applies under federal law. Resolution No. 68-16 requires that existing quality of waters be maintained unless degradation is justified based on specific findings. The Regional Water Board's Basin Plan implements, and incorporates by reference, both the state and federal antidegradation policies. As discussed in detail in the Fact Sheet the permitted discharge is consistent with the antidegradation provision of 40 CFR 131.12 and State Water Board Resolution No. 68-16.

O. Anti-Backsliding Requirements. Sections 402(o)(2) and 303(d)(4) of the CWA and federal regulations at 40 CFR 122.44(l) prohibit backsliding in NPDES permits. These anti-backsliding provisions require effluent limitations in a reissued permit to be as stringent as those in the previous permit, with some exceptions where limitations may be relaxed.. As discussed in detail in the Fact Sheet relaxation of effluent limitations in this Order for flow and mass limitations are consistent with the anti-backsliding requirements of the CWA and federal regulations.

P. Endangered Species Act. This Order does not authorize any act that results in the taking of a threatened or endangered species or any act that is now prohibited, or becomes prohibited in the future, under either the California Endangered Species Act (Fish and Game Code sections 2050 to 2097) or the Federal Endangered Species Act

(16 U.S.C.A. sections 1531 to 1544). This Order requires compliance with effluent limits, receiving water limits, and other requirements to protect the beneficial uses of waters of the state. The discharger is responsible for meeting all requirements of the applicable Endangered Species Act.

Q. Monitoring and Reporting. 40 CFR 122.48 requires that all NPDES permits specify requirements for recording and reporting monitoring results. Water Code sections 13267 and 13383 authorizes the Regional Water Board to require technical and monitoring reports. The Monitoring and Reporting Program establishes monitoring and reporting requirements to implement federal and State requirements. This Monitoring and Reporting Program is provided in Attachment E.

R. Standard and Special Provisions. Standard Provisions, which apply to all NPDES permits in accordance with 40 CFR 122.41, and additional conditions applicable to specified categories of permits in accordance with 40 CFR 122.42, are provided in Attachment D. The discharger must comply with all standard provisions and with those additional conditions that are applicable under 40 CFR 122.42. The Regional Water Board has also included in this Order special provisions applicable to the Discharger. A rationale for the special provisions contained in this Order is provided in the attached Fact Sheet.

S. Provisions and Requirements Implementing State Law. The provisions/requirements in subsections IV.D. and VI.C.2.b of this Order are included to implement State law only. These provisions/requirements are not required or authorized under the federal CWA; consequently, violations of these provisions/requirements are not subject to the enforcement remedies that are available for NPDES violations.

T. Notification of Interested Parties. The Regional Water Board has notified the Discharger and interested agencies and persons of its intent to prescribe Waste Discharge Requirements for the discharge and has provided them with an opportunity to submit their written comments and recommendations. Details of notification are provided in the Fact Sheet of this Order.

U. Consideration of Public Comment. The Regional Water Board, in a public meeting, heard and considered all comments pertaining to the discharge. Details of the Public Hearing are provided in the Fact Sheet of this Order.

III. DISCHARGE PROHIBITIONS

A. The discharge of any waste not disclosed by the Discharger or not within the reasonable contemplation of the Regional Water Board is prohibited.

B. Creation of pollution, contamination, or nuisance as defined by section 13050 of the California Water Code is prohibited.

C. The discharge of sludge or digester supernatant is prohibited, except as authorized under section VI.C.6.c of this Order (Solids Disposal and Handling Requirements).

D. The discharge or reclamation use of untreated or partially treated waste (receiving a lower level of treatment than described in section II.A of the Fact Sheet) from anywhere within the collection, treatment, or disposal system is prohibited, except as provided for in Attachment D, Standard Provision G (Bypass).

E. Any sanitary sewer overflow (SSO) that results in a discharge of untreated or partially treated wastewater to (a) waters of the State, (b) groundwater, or (c) land that creates pollution, contamination, or nuisance as defined in California Water Code section 13050 (m) is prohibited.

F. The discharge of waste to land that is not owned by or under agreement to use by the Discharger is prohibited, except for use for fire suppression as provided in title 22, sections 60307 (a) and (b) of the California Code of Regulations.

G. The discharge of waste at any point not described in Finding II.B or authorized by a permit issued by the State Water Board or another Regional Water Board is prohibited.

H. The discharge of waste to the Eel River and its tributaries is prohibited during the period from May 15 through September 30 of each year.

I. The discharge of septage to a location other than an approved septage receiving station is prohibited.

J. The mean daily dry weather flow of waste through the existing treatment plant shall not exceed 1.3 mgd, measured at ~~INF~~EFF-001 over a calendar month. The wet weather flow of waste through the existing treatment plant shall not exceed peak flows of 3.0 mgd, measured continuously at ~~INF~~EFF-001, calculated daily and averaged over a calendar month.

K. The mean daily flow of waste through the new treatment plant shall not exceed 4.0 mgd, measured continuously at ~~INF-001~~EFF-002, calculated daily and averaged over a calendar month.

IV. EFFLUENT LIMITATIONS AND DISCHARGE SPECIFICATIONS

A. Effluent Limitations for Existing WWTF

1. Effluent Limitations – Discharge Point 001

a. For the duration of operation of the existing WWTF as well as during the initial 90 days start-up period after activation of the new WWTF, the Discharger shall maintain compliance with the following limitations at Discharge Point 001, with compliance measured at Monitoring Location EFF-001 prior to discharge into

Outlet Creek and/or areas of recycled water application, as described in the Monitoring and Reporting Program (Attachment E). These effluent limitations shall apply in lieu of the corresponding effluent limitations specified for the same parameters that will take effect upon activation of the new WWTF[1].

Table 6. Effluent Limitations for Existing WWTF – Discharge Point 001

Parameter	Units	Effluent Limitations				
		Average Monthly	Average Weekly	Maximum Daily	Instantaneous Minimum	Instantaneous Maximum
Biochemical Oxygen Demand (5-day @ 20°C)	mg/L	30	45	60	--	--
	lbs/day[2,3]	325	488	650	--	--
Total Suspended Solids	mg/L	30	45	60	--	--
	lbs/day[2,3]	325	488	650	--	--
pH	std units	--	--	--	6.5	8.5
Cyanide, Total (as CN)	µg/L	4.3	--	8.5	--	--
Dichlorobromomethane	µg/L	0.56	--	1.1	--	--
Chlorine, Total Residual	mg/L	0.01	--	0.02	--	--
Settleable Solids	ml/L	0.1	--	0.2	--	--
Total Coliform Organisms	MPN/100 mL	23[4]	--	230	--	--

b. **Percent Removal:** The average monthly percent removal of BOD_5 and TSS shall not be less than 85 percent. Percent removal shall be determined from the 30-day average value of influent wastewater concentration in comparison to the 30-day average value of effluent concentration for the same constituent over the same time period as measured at Monitoring Locations INF-001 and EFF-001, respectively.

c. **Discharge Rate.** During the period from October 1 through May 14, discharges of treated wastewater shall not exceed 1 percent (1:100) of the upstream receiving water flow. For purposes of this Order, the flow in Outlet Creek shall be

---

1 During the initial 90 day start-up period after activation of the new WWTF the effluent limitations contained in Table 6 shall apply as appropriate to Discharge Points 002, 003, and 004 as measured at Eff-002, EFF-003, and EFF-004.

2 The mass discharge (lbs/day) is obtained from the following calculation for any calendar day, week or month:

$$\frac{8.34}{N}\sum^{N} Q_i C_i$$

in which N is the number of samples analyzed, Q_i and C_i are the flow rate (mgd) and the constituent concentration (mg/L) respectively, which are associated with each of the N grab samples, which may be taken in the sampling period. If a composite sample is taken, C_i is the concentration measured in the composite sample and Q_i is the average flow rate occurring during the period over which samples are composited.

3 Mass-based effluent limitations are based on the average dry weather flow of 1.3 mgd.

4 The median of all samples collected in a 30-day period. Compliance with the 30-day median shall be calculated based upon a continuous basis.

measured at the concrete flow-control structure in the creek below the confluence of Bechtel and Broaddus Creeks.

d. Acute Toxicity. There shall be no acute toxicity in treated wastewater discharged to the Eel River and its tributaries. The Discharger will be considered compliant with this limitation when the survival of aquatic organisms in a 96-hour bioassay of undiluted effluent complies with the following:

i. Minimum for any one bioassay: 70 percent survival
ii. Median for any three or more consecutive bioassays[5]: at least 90 percent survival.

Compliance with the acute toxicity effluent limitation shall be determined in accordance with section V of the Monitoring and Reporting Program (Attachment E) of this Order.

B. Effluent Limitations for New WWTF

1. Effluent Limitations – Discharge Point 002

a. Thirty (30) days prior to activation of the new WWTF described under paragraph 2 of Finding II.B, the Discharger shall submit written notification to the Executive Officer declaring the intent to operate and discharge from the new WWTF. Ninety (90) days after the initial activation of the new WWTF, the Discharger shall maintain compliance with the following effluent limitations at Discharge Point 002, with compliance measured at Monitoring Location EFF-002 following mechanical treatments as described in the Monitoring and Reporting Program (Attachment E).

Table 7. Effluent Limitations for New WWTF – Discharge Point 002

Parameter	Units	Effluent Limitations				
		Average Monthly	Average Weekly	Maximum Daily	Instantaneous Minimum	Instantaneous Maximum
Biochemical Oxygen Demand (5-day @ 20°C)	mg/L	10	15	--	--	--
	lbs/day[2,6]	334	500	--	--	--

[5] During periods of survival greater than 90 percent, the median shall be reported using the three most recent consecutive bioassays. When survival is depressed below 90 percent, the median calculation shall be reported after two more consecutive bioassays have been completed. The median shall continue to be calculated using all bioassays from the first reduction in survival below 90 percent until the median survival of all such samples exceeds 90 percent survival or until three consecutive samples demonstrate survival exceeding 90 percent.

[6] Mass-based effluent limitations are based on the permitted average monthly flow of 4.0 mgd.

Table 7. Effluent Limitations for New WWTF – Discharge Point 002

Parameter	Units	Effluent Limitations				
		Average Monthly	Average Weekly	Maximum Daily	Instantaneous Minimum	Instantaneous Maximum
Total Suspended Solids	mg/L	10	15	--	--	--
	lbs/day[2,6]	334	500	--	--	--
pH	std units	--	--	--	6.5	8.5
Nitrogen, Total (as N)	mg/L	10.0	--	--	--	--
Total Coliform Organisms[7]	MPN/100 mL	23[4]	230	--	--	--

2. Effluent Limitations – Discharge Point 003

a. As of October 1, 2012, the Discharger shall maintain compliance with the following effluent limitations at Discharge Point 003, with compliance measured at Monitoring Location EFF-003 after the enhancement wetland and prior to discharge into Outlet Creek as described in the Monitoring and Reporting Program (Attachment E).

Table 8. Effluent Limitations for New WWTF – Discharge Point 003[8]

Parameter	**Units**	**Effluent Limitations**				
		Average Monthly	**Average Weekly**	**Maximum Daily**	**Instantaneous Minimum**	**Instantaneous Maximum**
pH	std units	--	--	--	6.5	8.5
Cyanide, Total (as CN)	µg/L	4.3	--	8.5	--	--
Ammonia Nitrogen, Total (as N)	mg/L	See Attachment G[9]	--	See Attachment G	--	--

[7] Compliance with this parameter shall apply at all times. During periods of discharge at Discharge Point 003, enforcement for this parameter shall be applied in accordance with CWC section 13385. At all other times, including during periods of discharge from Discharge Point 004, compliance shall be evaluated in light of Basin Plan and title 22 requirements.

[8] Once the new mechanical treatment facility is operational, sampling and analysis for compliance with Discharge Point 003 effluent limitations for all constituents other than nitrogen compounds shall be conducted at EFF-002 until September 30, 2012.

[9] Average monthly effluent limitations (AMELs) for ammonia are determined based on the pH and temperature of the receiving water at the time the discharge is sampled. Maximum daily effluent limitations (MDELs) for ammonia are determined based on the pH of the receiving water at the time the discharge is sampled. See Attachments G-1 and G-2 for full tables of effluent limitations for ammonia.

Table 8. Effluent Limitations for New WWTF – Discharge Point 003[8]

Parameter	Units	Effluent Limitations				
		Average Monthly	Average Weekly	Maximum Daily	Instantaneous Minimum	Instantaneous Maximum
Nitrogen, Total (as N)	mg/L	1.6[10]	--	--	--	--
Nitrogen, Total (as N)	mg/L	6.0	--	--	--	--
Settleable Solids	ml/L	0.1	--	0.2	--	--

b. Percent Removal: The average monthly percent removal of BOD_5 and TSS shall not be less than 85 percent. Percent removal shall be determined from the 30-day average value of influent wastewater concentration in comparison to the 30-day average value of effluent concentration for the same constituent over the same time period as measured at Monitoring Locations INF-001 and EFF-003, respectively.

c. Discharge Rate. During the period from October 1 through May 14, discharges of treated wastewater shall not exceed 10 percent (1:10) of the upstream receiving water flow. For purposes of this Order, the flow in Outlet Creek shall be measured at the concrete flow-control structure in the creek below the confluence of Bechtel and Broaddus Creeks.

d. Acute Toxicity. There shall be no acute toxicity in treated wastewater discharged to the Eel River and its tributaries. The Discharger will be considered compliant with this limitation when the survival of aquatic organisms in a 96-hour bioassay of undiluted effluent complies with the following:

i. Minimum for any one bioassay: 70 percent survival
ii. Median for any three or more consecutive bioassays[5]: at least 90 percent survival.

Compliance with the acute toxicity effluent limitation shall be determined in accordance with section V of the Monitoring and Reporting Program (Attachment E) of this Order.

C. Land Discharge Specifications

This section of the Order is not applicable as this Order does not permit treated wastewater to be land applied for the purpose of disposal. The Order does include

[10] This effluent limitation applies only under critical conditions which occur when receiving water in Outlet Creek is either greater than 15°C or flowing at less than 2.4 cubic feet per second (cfs). At all other times, the total nitrogen effluent limitations for Discharge Point 003 shall be 6.0 mg/L.

Reclamation Specifications, below, which are applicable to reclamation/irrigation uses of treated wastewater.

D. Reclamation Specifications

1. Reclamation / Recycling Requirements

a. The Discharger shall comply with applicable state and local requirements regarding the production and use of reclaimed wastewater, including requirements of California Water Code (Water Code) sections 13500 – 13577 (Water Reclamation) and Department of Health Services (DHS) regulations at title 22, sections 60301 – 60357 of the Cal. Code of Regs (Water Recycling Criteria).

b. The Discharger shall comply with the specific requirements contained in Reclamation Requirements and Provisions - Attachment H of this Order.

2. Effluent Limitations – Discharge Point 004

c. Discharge Rate. During the period from May 15 through September 30 and all other times seasonally appropriate, discharges of treated wastewater shall not exceed the agronomic requirements[11] of the crops being irrigated.

E. Other Requirements

1. Disinfection Process Requirements for Ultraviolet (UV) Disinfection System. Upon completion and testing of the UV disinfection system, the Discharger shall operate the UV disinfection system in accordance with the following operating protocol and technical and administrative procedures in order to demonstrate compliance with Effluent Limitations at Discharge Point 002.

a. The Discharger shall provide continuous, reliable monitoring of flow, UV transmittance, UV intensity, UV dose, UV power, and turbidity.

b. The Discharger shall operate the UV disinfection system to provide a minimum UV dose of 50 millijoules per square centimeter (mJ/cm2) at all times.

c. The UV transmittance (at 254 nanometers) in the wastewater shall not fall below 65 percent of maximum at any time, unless otherwise approved by CDPH.

---

[11] Agronomic requirements refers to a specific rate of recycled water application that provides optimum amount of water, nutrients and salts, which selected crops require or tolerate without having any excessive nutrient or salt percolate beyond the root zone

d. The quartz sleeves and cleaning system components shall be visually inspected per the manufacturer's operation manual for physical wear (scoring, solarization, seal leaks, etc.) and to check the efficacy of the cleaning system.

e. The quartz sleeves shall be cleaned at fixed intervals to ensure the minimum required UV dose delivery is consistently achieved. Cleaning intervals shall be established based on the presence of coliform organisms.

f. Lamps shall be replaced per the manufacturer's recommendation, or sooner, if there are indications the lamps are failing to provide adequate disinfection. Lamp age and lamp replacement records must be maintained onsite.

g. Prior to initial discharge at Discharge Points 002 the Discharger shall submit to the Executive Officer a copy of a letter from the UV supplier showing written acceptance of the UV system capacity based upon the National Water Research Institute validation testing from the CDPH for the UV disinfection system supplied for the Willits WWTF.

h. Prior to initial discharge at Discharge Points 002 the Discharger shall submit to the Executive Officer and CDPH for approval, an operations and maintenance plan detailing how compliance with the National Water Research Institute's guidelines will be assured at all times.

i. The UV disinfection system shall be operated in accordance with the approved operations and maintenance plan.

j. Upon demonstration by the Discharger that the new UV system and operating protocol have been developed in accordance with the National Water Research Institute's guidelines the change in disinfection system from chlorine to UV and the operating protocol shall be authorized by letter from the Executive Officer.

V. RECEIVING WATER LIMITATIONS

A. Surface Water Limitation

Receiving water limitations are based on water quality objectives contained in the Basin Plan and are a required part of this Order. Compliance with receiving water limitations shall be measured at monitoring locations described in the Monitoring and Reporting Program (Attachment E). Discharges from the Facility shall not cause the following:

1. The discharge shall not cause the dissolved oxygen concentration of the receiving waters to be depressed below 7.0 mg/L. Additionally, the discharge shall not cause the dissolved oxygen content of the receiving water to fall below 10.0 mg/L more than 50 percent of the time, or below 7.5 mg/L more than 10 percent of the time assessed over a calendar year. In the event that the receiving waters are

determined to have dissolved oxygen concentration of less than 7.0 mg/L, the discharge shall not depress the dissolved oxygen concentration below the existing level.

2. The discharge shall not cause the specific conductance (micromhos[12]) concentration of the receiving waters to increase above 200 micromhos 50 percent of the time, or above 400 micromhos more than 10 percent of the time.

3. The discharge shall not cause the total dissolved solids concentration of the receiving waters to increase above 125 mg/L more than 50 percent of the time, or above 230 mg/L more than 10 percent of the time.

4. The discharge shall not cause the pH of the receiving waters to be depressed below 6.5 nor raised above 8.5. Within this range, the discharge shall not cause the pH of the receiving waters to be changed at any time more than 0.5 units from normal ambient pH levels. If the pH of the receiving water is less than 6.5, the discharge shall not cause a further depression of the pH of the receiving water. If the pH of the receiving water is greater than 8.5, the discharge shall not cause a further increase in the pH of the receiving water.

5. The discharge shall not cause turbidity of receiving waters to be increased more than 20 percent above naturally occurring background levels.

6. The discharge shall not cause receiving waters to contain floating materials, including solids, liquids, foams, and scum, in concentrations that cause nuisance or adversely affect beneficial uses.

7. The discharge shall not cause receiving waters to contain taste or odor producing substances in concentrations that impart undesirable tastes or odors to fish flesh or other edible products of aquatic origin, that cause nuisance, or` that adversely affect beneficial uses.

8. The discharge shall not cause coloration of receiving waters that causes nuisance or adversely affects beneficial uses.

9. The discharge shall not cause bottom deposits in receiving waters to the extent that such deposits cause nuisance or adversely affect beneficial uses.

10. The discharge shall not cause or contribute concentrations of biostimulants to the receiving water that promote objectionable aquatic growth to the extent that such growth causes nuisance or adversely affects beneficial uses.

---

[12] Measured at 77°F.

11. The discharge shall not cause receiving waters to contain toxic substances in concentrations that are toxic to, or that produce detrimental physiological responses in humans, plants, animals, or aquatic life. Compliance with this objective will be determined by use of indicator organisms, analyses of species diversity, population density, growth anomalies, bioassays of appropriate duration, or other appropriate methods, as specified by the Regional Water Board.

12. The discharge shall not cause receiving water temperature to increase by more than 5º F above natural receiving water temperature at any time.

13. No individual pesticide or combination of pesticides shall be present in concentrations that adversely affect beneficial uses. There shall be no bioaccumulation of pesticide concentrations found in bottom sediments or aquatic life.

14. The discharge shall not cause the receiving waters to contain concentrations of pesticides in excess of the limiting concentrations set forth in Table 3-2 of the Basin Plan. The discharge shall not cause the receiving waters to contain concentrations of pesticides in excess of the limiting concentrations established as Maximum Contaminant Levels (MCLs) by the CDPH in title 22, Cal. Code of Regs, section 64444.

15. The discharge shall not cause receiving waters to contain oils, greases, waxes, or other materials in concentrations that result in a visible film or coating on the surface of the water or on objects in the water, that cause nuisance, or that otherwise affect beneficial uses.

16. The discharge shall not cause a violation of any applicable water quality standard for receiving waters adopted by the Regional Water Board or the State Water Board, as required by the federal CWA and regulations adopted thereunder. If more stringent applicable water quality standards are promulgated or approved pursuant to section 303 of the CWA, or amendments thereto, the Regional Water Board will revise and modify this Order in accordance with such more stringent standards.

17. The discharge shall not cause concentrations of chemical constituents to occur in excess of limits specified in Table 3-2 of the Basin Plan or in excess of more stringent MCLs established for these pollutants in title 22, Cal. Code of Regs. Division 4, Chapter 15, Articles 4 and 5.5.

B. Groundwater Limitations

The collection, storage, and use of wastewater or recycled water shall not cause or contribute to a statistically significant degradation of groundwater quality, cause exceedance of applicable water quality objectives or create adverse impacts to beneficial uses of groundwater.

VI. PROVISIONS

A. Standard Provisions

1. **Federal Standard Provisions.** The Discharger shall comply with all Standard Provisions included in Attachment D of this Order.

2. **Regional Water Board Standard Provisions.** The Discharger shall comply with the following provisions:

   a. Failure to comply with provisions or requirements of this Order, or violation of other applicable laws or regulations governing discharges from this facility, may subject the Discharger to administrative or civil liabilities, criminal penalties, and/or other enforcement remedies to ensure compliance. Additionally, certain violations may subject the Discharger to civil or criminal enforcement from appropriate local, state, or federal law enforcement entities.

   b. In the event the Discharger does not comply or will be unable to comply for any reason, with any prohibition, interim or final effluent limitation, land discharge specification, reclamation specification, receiving water limitation, or provision of this Order that may result in a significant threat to human health or the environment, such as inundation of treatment components, breach of pond containment, sanitary sewer overflow, irrigation runoff, etc., and/or that results in a discharge to a drainage channel or a surface water, the Discharger shall report orally and in writing to the Regional Water Board staff all unauthorized spills. Spill notification and reporting shall be conducted in accordance with section X.E. of the Monitoring and Reporting Program (Attachment E).

   c. Prior to making any change in the point of discharge, place of use, or purpose of use of treated wastewater that results in a decrease of flow in any portion of a watercourse, the Discharger must file a petition with the State Water Board, Division of Water Rights, and receive approval for such a change. (Water Code § 1211)

   d. Ponds used for the storage of recycled water shall be constructed in a manner that protects groundwater. The Discharger shall submit design proposals for new wastewater storage ponds to the Regional Water Board Executive Officer for review prior to construction and demonstrate that the pond complies with the Water Code and title 27 of the California Code of Regulations. Pond design and operation plan must include features and BMPs to protect groundwater and prevent exceedances of groundwater quality objectives.

B. Monitoring and Reporting Program (MRP) Requirements

The Discharger shall comply with the MRP and future revisions thereto, in Attachment E of this Order.

C. Special Provisions

1. Reopener Provisions

a. **Standard Revisions.** If applicable water quality standards are promulgated or approved pursuant to section 303 of the CWA, or amendments thereto, the Regional Water Board may reopen this Order and make modifications in accordance with such revised standards.

b. **Reasonable Potential.** This Order may be reopened for modification to include an effluent limitation if monitoring establishes that the discharge causes, has the reasonable potential to cause, or contributes to an excursion above an applicable water quality objective.

c. **Whole Effluent Toxicity (WET).** As a result of a Toxicity Reduction Evaluation (TRE), this Order may be reopened to include a chronic toxicity limitation and/or a limitation for a specific toxic pollutant identified by a TRE. In addition, if a numeric water quality objective for chronic toxicity is adopted by the State Water Board, this Order may be reopened to include an effluent limitation for chronic toxicity based on that objective.

d. **303 (d) Listed Pollutants.** If a new TMDL is adopted and is applicable to receiving waters for this discharge, this Order may be reopened to incorporate requirements of the TMDL. If the Regional Water Board determines that a voluntary offset program is feasible for and desired by the Discharger, then this Order may be reopened to reevaluate the effluent limitations for the pollutant or pollutants addressed by the TMDL and, if appropriate, to incorporate provisions recognizing the Discharger's participation in an offset program.

e. **Special Studies.** If a wastewater reclamation/recycled water evaluation, water effect ratio, mixing zone or other water quality study provides new information and a basis for determining that a permit condition or conditions should be modified, the Regional Water Board may reopen this Order and make modifications in accordance with 40 CFR 122.62.

f. **Nutrients.** This Order contains effluent limitations for ammonia, and total nitrogen. If new water quality objectives for nutrients are established, or if monitoring data indicate the need for more stringent effluent limitations for these or other nutrient parameters, this Order may be reopened and modified to include new or modified effluent limitations, as necessary.

2. Special Studies, Technical Reports and Additional Monitoring Requirements

a. Toxicity Reduction Requirements

i. Whole Effluent Toxicity (WET). In addition to a limitation for whole effluent acute toxicity, the Monitoring and Reporting Program (MRP) of this Order requires routine monitoring for whole effluent chronic toxicity to determine compliance with the Basin Plan's narrative water quality objective for toxicity. As established by the MRP, if either of the effluent limitations for acute toxicity is exceeded (a single sample with less than 70% survival or a three sample median of less than 90% survival) or if the chronic toxicity monitoring trigger of 1.0 TUc (where TUc = 100/NOEC)[13] is exceeded, the Discharger shall conduct accelerated monitoring as specified in section V. of the MRP.

Results of accelerated toxicity monitoring will indicate a need to conduct a Toxicity Reduction Evaluation (TRE), if toxicity persists; or it will indicate that a return to routine toxicity monitoring is justified because persistent toxicity has not been identified by accelerated monitoring. A TRE shall be conducted in accordance with the TRE Workplan prepared by the Discharger pursuant to Section VI.C.2.a.(2) of this Order, below.

ii. .**Toxicity Reduction Evaluations (TRE) Workplan.** The Discharger shall prepare and submit to the Regional Water Board Executive Officer a TRE Workplan **within 180 days of the effective date of this Order**. This requirement may be met using an existing TRE Workplan which meets the criteria contained in this section. This plan shall be reviewed and updated as necessary in order to remain current and applicable to the discharge and discharge facilities. The workplan shall describe the steps the Discharger intends to follow if toxicity is detected, and should include at least the following items:

(a) A description of the investigation and evaluation techniques that would be used to identify potential causes and sources of toxicity, effluent variability, and treatment system efficiency.

(b) A description of the facility's methods of maximizing in house treatment efficiency and good housekeeping practices.

[13] This Order does not allow any credit for dilution for the chronic condition. Therefore, a TRE is triggered when the effluent exhibits a pattern of toxicity at 100% effluent.

(c) If a toxicity identification evaluation (TIE) is necessary, an indication of the person who would conduct the TIEs (i.e., an in house expert or an outside contractor).

iii. Toxicity Reduction Evaluation (TRE). The TRE shall be conducted in accordance with the following:

(a) The TRE shall be initiated within 30 days of the date of completion of the accelerated monitoring test, required by section V of the MRP, observed to exceed either the acute or chronic toxicity parameter.

(b) The TRE shall be conducted in accordance with the Discharger's workplan.

(c) The TRE shall be in accordance with current technical guidance and reference material including, at a minimum, the USEPA manual EPA/833B 99/002.

(d) The TRE may end at any stage if, through monitoring results, it is determined that there is no longer consistent toxicity.

(e) The Discharger may initiate a TIE as part of the TRE process to identify the cause(s) of toxicity. As guidance, the Discharger shall use the USEPA acute and chronic manuals, EPA/600/6-91/005F (Phase I), EPA/600/R-92/080 (Phase II), and EPA-600/R-92/081 (Phase III).

(f) As toxic substances are identified or characterized, the Discharger shall continue the TRE by determining the source(s) and evaluating alternative strategies for reducing or eliminating the substances from the discharge. All reasonable steps shall be taken to reduce toxicity to levels consistent with chronic toxicity parameters.

(g) Many recommended TRE elements accompany required efforts of source control, pollution prevention, and storm water control programs. TRE efforts should be coordinated with such efforts. To prevent duplication of efforts, evidence of complying with requirements of recommendations of such programs may be acceptable to comply with requirements of the TRE.

(h) The Regional Water Board recognizes that chronic toxicity may be episodic and identification of a reduction of sources of chronic toxicity may not be successful in all cases. Consideration of enforcement action by the Regional Water Board will be based in part on the Discharger's actions and efforts to identify and control or reduce sources of consistent toxicity.

b. Wastewater Reclamation Evaluation.

The Discharger shall prepare and submit for Executive Officer approval a workplan to evaluate its water reclamation system. The workplan shall be of sufficient scope to demonstrate that the discharge of treated wastewater to the Discharger's land irrigation system will comply with Section IV.D of this Order, is protective of the beneficial uses of groundwater and in compliance with the recycled water requirements of title 22. The workplan shall include, but not be limited to the following:

i. **By November 1, 2011**, submit for Executive Officer approval, a workplan for a reclamation study to determine appropriate salt, nutrient, and irrigation management practices for each area of application. The workplan proposal shall contain milestones and a time schedule for completion of the study. The workplan proposal should be designed to investigate:

(a) Annual storm water that could occur every 100 years, distributed monthly in accordance with historic rainfall patterns;
(b) site specific lithology and soil transmissivity;
(c) depth to groundwater across seasonal variations;
(d) quality of the recycled water
(e) vegetative or crop nutrient demand;
(f) acreage required to prevent irrigation beyond the agronomic requirements of vegetation or crops, accounting for evapotranspirative demand, distribution uniformity of irrigation system, and leaching needed to prevent the buildup of salts in soil.

ii. By **November 1, 2012**, submit for Executive Officer approval a report describing the findings and conclusions of the reclamation study that models the fate and transport of wastewater, nutrients, and salts. The report should result in a definitive application rate for recycled water specific to each parcel and will upon Executive Officer approval become enforceable under this Order. The reclamation report shall include:

(a) all pertinent information including field data and lab reports, etc. used to derive conclusions in the report;
(b) nitrogen removal pathways including denitrification, volatilization, soil storage, crop uptake, and removal via harvesting,
(c) additional nutrient sources, from activities, such as grazing,
(d) a complete water balance for the entire designated use area identifying parcels by number, showing sufficient recycled water use/disposal capacity, incorporating factors such as rainfall, evaporation, evapotranspiration, soil moisture, and sustainable percolation rate of designated use are soils

(e) a nitrogen balance indicating the hydraulic loading rate, annual vegetative nitrogen uptake, background soil nitrogen and estimating percolating nitrogen concentrations beyond the root zone of plants;

(f) a map identifying each parcel to be used for recycled water application as well as surface water and well features.

iii. If the reclamation study demonstrates that wastewater reuse does not conform to the requirements of Section IV.D., **by April 1, 2013**, the Discharger shall:

(a) Submit for Executive Officer approval, a written proposal including milestones and a time schedule for completion, to either study alternatives to comply with reclamation/recycling requirements; or

(b) Submit a revised report of waste discharge and apply for a permit to conduct land disposal.

3. Best Management Practices and Pollution Prevention

The Discharger shall develop and conduct a Pollutant Minimization Program (PMP) as further described below when there is evidence (e.g., sample results reported as DNQ when the effluent limitation is less than the MDL, sample results from analytical methods more sensitive than those methods required by this Order, presence of WET, health advisories for fish consumption, results of benthic or aquatic organism tissue sampling) that a priority pollutant is present in the effluent above an effluent limitation and either:

a. A sample result is reported as DNQ and the effluent limitation is less than the RL; or

b. A sample result is reported as ND and the effluent limitation is less than the MDL, using definitions described in Attachment A and reporting protocols described in MRP section X.B.4.

c. The PMP shall include, but not be limited to, the following actions and submittals acceptable to the Regional Water Board:

i. An annual review and semi-annual monitoring of potential sources of the reportable priority pollutant(s), which may include fish tissue monitoring and other bio-uptake sampling;

ii. Quarterly monitoring for the reportable priority pollutant(s) in the influent to the wastewater treatment system;

iii. Submittal of a control strategy designed to proceed toward the goal of maintaining concentrations of the reportable priority pollutant(s) in the effluent at or below the effluent limitation;

iv. Implementation of appropriate cost-effective control measures for the reportable priority pollutant(s), consistent with the control strategy; and

v. An annual status report that shall be sent to the Regional Water Board including:

(a) All PMP monitoring results for the previous year;
(b) A list of potential sources of the reportable priority pollutant(s);
(c) A summary of all actions undertaken pursuant to the control strategy; and
(d) A description of actions to be taken in the following year.

4. Construction, Operation and Maintenance Specifications

a. The Discharger shall at all times properly operate and maintain all facilities and systems of treatment and control (and related appurtenances) that are installed or used by the Discharger to achieve compliance with this Order. Proper operation and maintenance includes adequate laboratory quality control and appropriate quality assurance procedures. This provision requires the operation or backup or auxiliary facilities or similar systems that are installed by the Discharger only when necessary to achieve compliance with the conditions of this Order. (40 CFR 122.41 (e))

b. The Discharger shall maintain an updated Operation and Maintenance (O&M) Manual for the facility. The Discharger shall update the O&M Manual, as necessary, to conform to changes in operation and maintenance of the facility. The O&M Manual shall be readily available to operating personnel onsite. The O&M Manual shall include the following.

c. Description of the treatment plant table of organization showing the number of employees, duties and qualifications and plant attendance schedules (daily, weekends and holidays, part-time, etc). The description should include documentation that the personnel are knowledgeable and qualified to operate the treatment facility so as to achieve the required level of treatment at all times.

i. Detailed description of safe and effective operation and maintenance of treatment processes, process control instrumentation and equipment.

ii. Description of laboratory and quality assurance procedures.

iii. Process and equipment inspection and maintenance schedules.

iv. Description of safeguards to assure that, should there be reduction, loss, or failure of electric power, the Discharger will be able to comply with requirements of this Order.

v. Description of preventive (fail-safe) and contingency (response and cleanup) plans for controlling accidental discharges, and for minimizing the effect of such events. These plans shall identify the possible sources (such as loading and storage areas, power outage, waste treatment unit failure, process equipment failure, tank and piping failure) of accidental discharges, untreated or partially treated waste bypass, and polluted drainage.

5. Septage Handling Requirements

a. The Discharger shall implement any necessary legal authorities to monitor and enforce septage handling requirements, including restriction of discharges of toxic materials to the collection system and WWTF and inspection facilities connected to the system.

b. The Discharger shall maintain a waste hauler manifest that identifies the name of the hauler, county ID number, the date and time the waste load was transferred, and the volume and source of the waste.

c. The Discharger shall accept the discharge of septage only during business hours and when the Discharger's operations staff is on site.

d. The Discharger shall accept septage only at an approved septage receiving station/location..

e. The Discharger shall collect representative grab samples of septage loads in accordance with monitoring and reporting program (Attachment E).

6. Special Provisions for Municipal Facilities (POTWs Only)

a. Wastewater Collection Systems

i. Statewide-General WDRs for Sanitary Sewer Systems

(e) On May 2, 2006, the State Water Board adopted State Water Board Order No. 2006-0003-DWQ, Statewide General WDRs for Sanitary Sewer Systems. Order No. 2006-0003-DWQ requires that all public agencies that currently own or operate sanitary sewer systems apply for coverage under the General WDRs by November 2, 2006. On February 20, 2008, the State Water Board adopted Order No. WQ-2008-0002-EXEC Adopting Amended Monitoring and Reporting Requirements for Statewide General Waste Discharge Requirements for Sanitary Sewer Systems. The Discharger shall maintain coverage under, and shall be subject to the requirements of Order Nos. 2006-0003-DWQ and WQ-2008-0002-EXEC and any future revisions thereto for operation of its wastewater collection system.

(f) In addition to the coverage obtained under Order No. 2006-0003, the Discharger's collection system is part of the system that is subject to this Order. As such, the Discharger must properly operate and maintain its collection system. (40 CFR 122.41 (e)) The Discharger must report any noncompliance (40 CFR 122.41 (l) (6) and (7)) and mitigate any discharge from the collection system in violation of this Order (40 CFR 122.41 (d)).

ii. Sanitary Sewer Overflows

(g) The Discharger shall take all feasible steps to stop spills and sanitary sewer overflows (SSOs) as soon as possible. All reasonable steps should be taken to collect spilled material and protect the public from contact with wastes or waste-contaminated soil or surfaces.

(h) The Discharger shall report orally and in writing to the Regional Water Board staff all SSOs and unauthorized spills of waste. Spill notification and reporting shall be conducted in accordance with the Monitoring and Reporting Program.

b. Source Control Provisions

The Discharger shall perform source control functions, to include the following.

i. Implement the necessary legal authorities to monitor and enforce source control standards, restrict discharges of toxic materials to the collection system and inspect facilities connected to the system.

ii. If waste haulers are allowed to discharge to the Facility, establish a waste hauler permit system, to be reviewed by the Executive Officer, to regulate waste haulers discharging to the collection system or facility.

iii. Conduct a waste survey one time every 5 years, or more frequently if required by the Executive Officer, to identify all industrial dischargers that might discharge pollutants that could pass through or interfere with the operation or performance of the facility.

(a) General prohibitions. Pollutants introduced into WWTFs by a non-domestic source shall not pass through [40 CFR403.3(n)] the WWTF or interfere [40 CFR 403.3(i)] with the operation or performance of the works. These general prohibitions and the specific prohibitions in paragraph (b) of this provision apply to all non-domestic sources introducing pollutants into a WWTF whether or not the source is subject to other National Pretreatment Standards or any national, state, or local pretreatment requirements.

(b) Specific prohibitions. In addition, the following pollutants shall not be introduced into a WWTF:

(i) Pollutants that create a fire or explosion hazard in the WWTF;

(ii) Pollutants that will cause corrosive structural damage to the WWTF, but in no case discharges with pH lower than 5.0, unless the WWTF is specifically designed to accommodate such discharges;

(iii) Solid or viscous pollutants in amounts that will cause obstruction to the flow in the WWTF resulting in interference;

(iv) Any pollutant, including oxygen demanding pollutants (BOD, etc.) released in a discharge at a flow rate and/or pollutant concentration that will cause interference with the WWTF;

(v) Heat in amounts that will inhibit biological activity in the WWTF resulting in interference, but in no case heat in such quantities that the temperature at the WWTF exceeds 40ºC (104ºF) unless the Regional Water Board, upon request of the permittee, approves alternate temperature limits;

(vi) Petroleum oil, nonbiodegradable cutting oil, or products of mineral oil origin in amounts that will cause interference or pass through;

(vii) Pollutants that result in the presence of toxic gases, vapors, or fumes within the WWTF in a quantity that may cause acute worker health and safety problems; and

(viii) Any trucked or hauled pollutant, except at discharge points designated by the permittee.

(ix) Perform ongoing industrial inspections and monitoring, as necessary, to ensure adequate source control.

(x) Perform public outreach to educate industrial, commercial, and residential users about the importance of preventing discharges of industrial and toxic wastes to the wastewater treatment plant.

c. Sludge Disposal and Handling Requirements

i. Sludge, as used in this document, means the solid, semisolid, and liquid residues removed during primary, secondary, or advanced wastewater treatment processes. Solid waste refers to grit and screenings generated during preliminary treatment. Biosolids refers to sludge that has been treated and tested and shown to be capable of being beneficially and legally used pursuant to federal and State regulations as a soil amendment for agriculture, silviculture, horticulture, and land reclamation activities.

ii. All collected sludges and other solid waste removed from liquid wastes shall be removed from screens, sumps, ponds, and tanks as needed to ensure optimal plant operation and disposed of in accordance with applicable federal and State regulations.

iii. The use and disposal of biosolids shall comply with all requirements of 40 CFR Part 503, which are enforceable by the USEPA, not the Regional Water Board. If, during the term of this Order, the State accepts primacy for implementation of 40 CFR Part 503, the Regional Water Board may also initiate enforcement, where appropriate.

iv. Sludge or biosolids that are disposed of in a municipal solid waste landfill or used as landfill daily cover shall meet the applicable requirements of 40 CFR Part 258. In its annual Self-Monitoring Report, the Discharger shall report the amount of sludge or biosolids disposed of, and the landfill(s) which received the sludge or biosolids.

v. The beneficial use of biosolids by application to land as soil amendment is not covered or authorized by this Order. Biosolids that are applied to land as soil amendment by the Discharger within the North Coast Region shall comply with State Water Board Water Quality Order No. 2004-0012-DWQ (General Waste Discharge Requirements for the Discharge of Biosolids to Land as a Soil Amendment in Agricultural, Silvicultural, Horticultural, and Land Reclamation Activities) or other permits issued by the Regional Water Board.

vi. The Discharger shall take all reasonable steps to prevent and minimize any sludge use or disposal in violation of this Order that is likely to adversely affect human health or the environment.

vii. Solids and sludge treatment, storage, and disposal or reuse shall not create a nuisance, such as objectionable odors and flies, and shall not result in ground water contamination.

viii. Solids and sludge treatment and storage sites shall have facilities adequate to divert surface water runoff from adjacent areas, to protect the boundaries of the site from erosion, and to prevent drainage from the treatment and storage site. Adequate protection is defined as protection from at least a 100-year storm event.

ix. The discharge of sewage sludge, biosolids, and other waste solids shall not cause waste material to be in a position where it is, or can be conveyed from the treatment and storage sites and deposited in the waters of the State.

d. Operator Certification

Supervisors and operators of municipal WWTFs shall possess a certificate of appropriate grade in accordance with title 23, Cal. Code of Regs, section 3680. The State Water Board may accept experience in lieu of qualification training. In lieu of a properly certified WWTP operator, the State Water Board may approve use of a water treatment facility operator of appropriate grade certified by CDPH where water reclamation is involved.

e. Adequate Capacity

If the Discharger's wastewater treatment plant will reach capacity within 4 years, the Discharger shall notify the Regional Water Board. A copy of such notification shall be sent to appropriate local elected officials, local permitting agencies, and the press. Factors to be evaluated in assessing reserve capacity shall include, at a minimum, (1) comparison of the wet weather design flow with the highest daily flow, and (2) comparison of the average dry weather design flow with the lowest 30-day flow. The Discharger shall demonstrate that adequate steps are being taken to address the capacity problem. The Discharger shall submit a technical report to the Regional Water Board showing how flow volumes will be prevented from exceeding capacity, or how capacity will be increased, within 120 days after providing notification to the Regional Water Board, or within 120 days after receipt of Regional Water Board notification, that the WWTP will reach capacity within four years. The time for filing the required technical report may be extended by the Regional Water Board. An extension of 30 days may be granted by the Executive Officer, and longer extensions may be granted by the Regional Water Board itself (title 23, Cal. Code of Regs., section 2232)

7. Statewide General WDRs for Discharge of Biosolids to Land

For the discharge of biosolids from the wastewater treatment plant, **no later than 1 year from the effective date of this Order**, the Discharger shall obtain authorization to discharge under and meet the requirements of the State Water Resources Control Board Water Quality Order No. 2004-0012–DWQ *General Waste Discharge Requirements for the Discharge of Biosolids to Land or Use as a Soil Amendment In Agricultural, Silvicultural, Horticultural, and Land Reclamation Activities*, or other permit issued by the Regional Water Board as applicable. Alternatively, the Discharger may dispose of biosolids at another appropriately permitted facility.

8. Other Special Provisions

a. Storm Water

For the control of storm water discharged from the site of the WWTF, if applicable, the Discharger shall seek authorization to discharge under and meet

the requirements of the State Water Board's Water Quality Order 97-03-DWQ, NPDES General Permit No. CAS000001, Waste Discharge Requirements for Discharges of Storm Water Associated with Industrial Activities Excluding Construction Activities (or subsequent renewed versions of the General Permit).

b. Compliance Schedules

This section of the Order is not applicable.

VII. COMPLIANCE DETERMINATION

Compliance with the effluent limitations contained in section IV of this Order will be determined as specified below.

A. General

Compliance with effluent limitations for priority pollutants shall be determined using sample reporting protocols defined in the MRP of this Order. For purposes of reporting and administrative enforcement by the Regional and State Water Boards, the Discharger shall be deemed out of compliance with effluent limitations if the concentration of the priority pollutant in the monitoring sample is greater than the effluent limitation and greater than or equal to the reporting level (RL).

B. Multiple Sample Data

When determining compliance with an AMEL for priority pollutants, and more than one sample result is available, the Discharger shall compute the arithmetic mean unless the data set contains one or more reported determinations of "Detected, but Not Quantified" (DNQ) or "Not Detected" (ND). In those cases, the Discharger shall compute the median in place of the arithmetic mean in accordance with the following procedure.

1. The data set shall be ranked from low to high, ranking the reported ND determinations lowest, DNQ determinations next, followed by quantified values (if any). The order of the individual ND or DNQ determinations is unimportant.

2. The median value of the data set shall be determined. If the data set has an odd number of data points, then the median is the middle value. If the data set has an even number of data points, then the median is the average of the two values around the middle unless one or both of the points are ND or DNQ, in which case the median value shall be the lower of the two data points where DNQ is lower than a value and ND is lower than DNQ.

C. Average Monthly Effluent Limitation (AMEL)

If the average (or when applicable, the median determined by subsection B above for multiple sample data) of daily discharges over a calendar month exceeds the AMEL for

a given parameter, this will represent a single violation, though the Discharger will be considered out of compliance for each day of that month for that parameter (e.g., resulting in 31 days of non-compliance in a 31-day month). If only a single sample is taken during the calendar month and the analytical result for that sample exceeds the AMEL, the Discharger will be considered out of compliance for that calendar month. The Discharger will only be considered out of compliance for days when the discharge occurs. For any one calendar month during which no sample (daily discharge) is taken, no compliance determination can be made for that calendar month.

D. Average Weekly Effluent Limitation (AWEL)

If the average (or when applicable, the median determined by subsection B above for multiple sample data) of daily discharges over a calendar week exceeds the AWEL for a given parameter, this will represent a single violation, though the Discharger will be considered out of compliance for each day of that week for that parameter, resulting in 7 days of non-compliance. If only a single sample is taken during the calendar week and the analytical result for that sample exceeds the AWEL, the Discharger will be considered out of compliance for that calendar week. The Discharger will only be considered out of compliance for days when the discharge occurs. For any one calendar week during which no sample (daily discharge) is taken, no compliance determination can be made for that calendar week.

E. Maximum Daily Effluent Limitation (MDEL)

If a daily discharge (or when applicable, the median determined by subsection B, above, for multiple sample data of a daily discharge) exceeds the MDEL for a given parameter, the Discharger will be considered out of compliance for that parameter for that 1 day only within the reporting period. For any 1 day during which no sample is taken, no compliance determination can be made for that day.

F. Instantaneous Minimum Effluent Limitation

If the analytical result of a single grab sample is lower than the instantaneous minimum effluent limitation for a parameter, the Discharger will be considered out of compliance for that parameter for that single sample. Non-compliance for each sample will be considered separately (e.g., the results of two grab samples taken within a calendar day that both are lower than the instantaneous minimum effluent limitation would result in two instances of non-compliance with the instantaneous minimum effluent limitation).

G. Instantaneous Maximum Effluent Limitation

If the analytical result of a single grab sample is higher than the instantaneous maximum effluent limitation for a parameter, the Discharger will be considered out of compliance for that parameter for that single sample. Non-compliance for each sample will be considered separately (e.g., the results of two grab samples taken within a calendar day that both exceed the instantaneous maximum effluent limitation would

result in two instances of non-compliance with the instantaneous maximum effluent limitation).

ATTACHMENT A – DEFINITIONS

Arithmetic Mean (μ)
Also called the average, is the sum of measured values divided by the number of samples. For ambient water concentrations, the arithmetic mean is calculated as follows:

Arithmetic mean = $\mu = \Sigma x / n$ where: Σx is the sum of the measured ambient water concentrations, and n is the number of samples.

Average Monthly Effluent Limitation (AMEL)
The highest allowable average of daily discharges over a calendar month, calculated as the sum of all daily discharges measured during a calendar month divided by the number of daily discharges measured during that month.

Average Weekly Effluent Limitation (AWEL)
The highest allowable average of daily discharges over a calendar week (Sunday through Saturday), calculated as the sum of all daily discharges measured during a calendar week divided by the number of daily discharges measured during that week.

Bioaccumulative
Those substances taken up by an organism from its surrounding medium through gill membranes, epithelial tissue, or from food and subsequently concentrated and retained in the body of the organism.

Carcinogenic
Pollutants are substances that are known to cause cancer in living organisms.

Coefficient of Variation (CV)
CV is a measure of the data variability and is calculated as the estimated standard deviation divided by the arithmetic mean of the observed values.

Daily Discharge
Daily Discharge is defined as either: (1) the total mass of the constituent discharged over the calendar day (12:00 am through 11:59 pm) or any 24-hour period that reasonably represents a calendar day for purposes of sampling (as specified in the permit), for a constituent with limitations expressed in units of mass or; (2) the unweighted arithmetic mean measurement of the constituent over the day for a constituent with limitations expressed in other units of measurement (e.g., concentration).

The daily discharge may be determined by the analytical results of a composite sample taken over the course of one day (a calendar day or other 24-hour period defined as a day) or by the arithmetic mean of analytical results from one or more grab samples taken over the course of the day.

For composite sampling, if 1 day is defined as a 24-hour period other than a calendar day, the analytical result for the 24-hour period will be considered as the result for the calendar day in which the 24-hour period ends.

Detected, but Not Quantified (DNQ)
DNQ are those sample results less than the RL, but greater than or equal to the laboratory's MDL.

Dilution Credit
Dilution Credit is the amount of dilution granted to a discharge in the calculation of a water quality-based effluent limitation, based on the allowance of a specified mixing zone. It is calculated from the dilution ratio or determined through conducting a mixing zone study or modeling of the discharge and receiving water.

Effluent Concentration Allowance (ECA)
ECA is a value derived from the water quality criterion/objective, dilution credit, and ambient background concentration that is used, in conjunction with the coefficient of variation for the effluent monitoring data, to calculate a long-term average (LTA) discharge concentration. The ECA has the same meaning as waste load allocation (WLA) as used in USEPA guidance (Technical Support Document For Water Quality-based Toxics Control, March 1991, second printing, EPA/505/2-90-001).

Enclosed Bays
Enclosed Bays means indentations along the coast that enclose an area of oceanic water within distinct headlands or harbor works. Enclosed bays include all bays where the narrowest distance between the headlands or outermost harbor works is less than 75 percent of the greatest dimension of the enclosed portion of the bay. Enclosed bays include, but are not limited to, Humboldt Bay, Bodega Harbor, Tomales Bay, Drake's Estero, San Francisco Bay, Morro Bay, Los Angeles-Long Beach Harbor, Upper and Lower Newport Bay, Mission Bay, and San Diego Bay. Enclosed bays do not include inland surface waters or ocean waters.

Estimated Chemical Concentration
The estimated chemical concentration that results from the confirmed detection of the substance by the analytical method below the ML value.

Estuaries
Estuaries means waters, including coastal lagoons, located at the mouths of streams that serve as areas of mixing for fresh and ocean waters. Coastal lagoons and mouths of streams that are temporarily separated from the ocean by sandbars shall be considered estuaries. Estuarine waters shall be considered to extend from a bay or the open ocean to a point upstream where there is no significant mixing of fresh water and seawater. Estuarine waters included, but are not limited to, the Sacramento-San Joaquin Delta, as defined in Water Code section 12220, Suisun Bay, Carquinez Strait downstream to the Carquinez Bridge, and appropriate areas of the Smith, Mad, Eel, Noyo, Russian, Klamath, San Diego, and Otay rivers. Estuaries do not include inland surface waters or ocean waters.

Inland Surface Waters
All surface waters of the State that do not include the ocean, enclosed bays, or estuaries.

Instantaneous Maximum Effluent Limitation
The highest allowable value for any single grab sample or aliquot (i.e., each grab sample or aliquot is independently compared to the instantaneous maximum limitation).

Instantaneous Minimum Effluent Limitation
The lowest allowable value for any single grab sample or aliquot (i.e., each grab sample or aliquot is independently compared to the instantaneous minimum limitation).

Maximum Daily Effluent Limitation (MDEL)
The highest allowable daily discharge of a pollutant, over a calendar day (or 24-hour period). For pollutants with limitations expressed in units of mass, the daily discharge is calculated as the total mass of the pollutant discharged over the day. For pollutants with limitations expressed in other units of measurement, the daily discharge is calculated as the arithmetic mean measurement of the pollutant over the day.

Median
The middle measurement in a set of data. The median of a set of data is found by first arranging the measurements in order of magnitude (either increasing or decreasing order). If the number of measurements (*n*) is odd, then the median = $X_{(n+1)/2}$. If *n* is even, then the median = $(X_{n/2} + X_{(n/2)+1})/2$ (i.e., the midpoint between the *n*/2 and *n*/2+1).

Method Detection Limit (MDL)
MDL is the minimum concentration of a substance that can be measured and reported with 99 percent confidence that the analyte concentration is greater than zero, as defined in title 40 of the Code of Federal Regulations, Part 136 (40 CFR Part 136), Attachment B, revised as of July 3, 1999.

Minimum Level (ML)
ML is the concentration at which the entire analytical system must give a recognizable signal and acceptable calibration point. The ML is the concentration in a sample that is equivalent to the concentration of the lowest calibration standard analyzed by a specific analytical procedure, assuming that all the method specified sample weights, volumes, and processing steps have been followed.

Mixing Zone
Mixing Zone is a limited volume of receiving water that is allocated for mixing with a wastewater discharge where water quality criteria can be exceeded without causing adverse effects to the overall water body.

Not Detected (ND)
Sample results which are less than the laboratory's MDL.

Ocean Waters
The territorial marine waters of the State as defined by California law to the extent these waters are outside of enclosed bays, estuaries, and coastal lagoons. Discharges to ocean waters are regulated in accordance with the State Water Board's California Ocean Plan.

Persistent Pollutants
Persistent pollutants are substances for which degradation or decomposition in the environment is nonexistent or very slow.

Pollutant Minimization Program (PMP)
PMP means waste minimization and pollution prevention actions that include, but are not limited to, product substitution, waste stream recycling, alternative waste management methods, and education of the public and businesses. The goal of the PMP shall be to reduce all potential sources of a priority pollutant(s) through pollutant minimization (control) strategies, including pollution prevention measures as appropriate, to maintain the effluent concentration at or below the water quality-based effluent limitation. Pollution prevention measures may be particularly appropriate for persistent bioaccumulative priority pollutants where there is evidence that beneficial uses are being impacted. The Regional Water Board may consider cost effectiveness when establishing the requirements of a PMP. The completion and implementation of a Pollution Prevention Plan, if required pursuant to Water Code section 13263.3(d), shall be considered to fulfill the PMP requirements.

Pollution Prevention
Pollution Prevention means any action that causes a net reduction in the use or generation of a hazardous substance or other pollutant that is discharged into water and includes, but is not limited to, input change, operational improvement, production process change, and product reformulation (as defined in Water Code section 13263.3). Pollution prevention does not include actions that merely shift a pollutant in wastewater from one environmental medium to another environmental medium, unless clear environmental benefits of such an approach are identified to the satisfaction of the State or Regional Water Board.

Reporting Level (RL)
RL is the ML (and its associated analytical method) used for reporting and compliance determination from the MLs included in this Order. The MLs included in this Order correspond to approved analytical methods for reporting a sample result that are selected by the Regional Water Board either from Appendix 4 of the SIP in accordance with section 2.4.2 of the SIP or established in accordance with section 2.4.3 of the SIP. The ML is based on the proper application of method-based analytical procedures for sample preparation and the absence of any matrix interferences. Other factors may be applied to the ML depending on the specific sample preparation steps employed. For example, the treatment typically applied in cases where there are matrix-effects is to dilute the sample or sample aliquot by a factor of ten. In such cases, this additional factor must be applied to the ML in the computation of the RL.

Satellite Collection System
The portion, if any, of a sanitary sewer system owned or operated by a different public agency than the agency that owns and operates the wastewater treatment facility that a sanitary sewer system is tributary to.

Source of Drinking Water
Any water designated as municipal or domestic supply (MUN) in a Regional Water Board Basin Plan.

Standard Deviation (σ)
Standard Deviation is a measure of variability that is calculated as follows:

$$\sigma = (\sum[(x - \mu)^2]/(n - 1))^{0.5}$$

where:
x is the observed value;
μ is the arithmetic mean of the observed values; and
n is the number of samples.

Toxicity Reduction Evaluation (TRE)
TRE is a study conducted in a step-wise process designed to identify the causative agents of effluent or ambient toxicity, isolate the sources of toxicity, evaluate the effectiveness of toxicity control options, and then confirm the reduction in toxicity. The first steps of the TRE consist of the collection of data relevant to the toxicity, including additional toxicity testing, and an evaluation of facility operations and maintenance practices, and best management practices. A Toxicity Identification Evaluation (TIE) may be required as part of the TRE, if appropriate. (A TIE is a set of procedures to identify the specific chemical(s) responsible for toxicity. These procedures are performed in three phases (characterization, identification, and confirmation) using aquatic organism toxicity tests.)

ATTACHMENT B – MAP

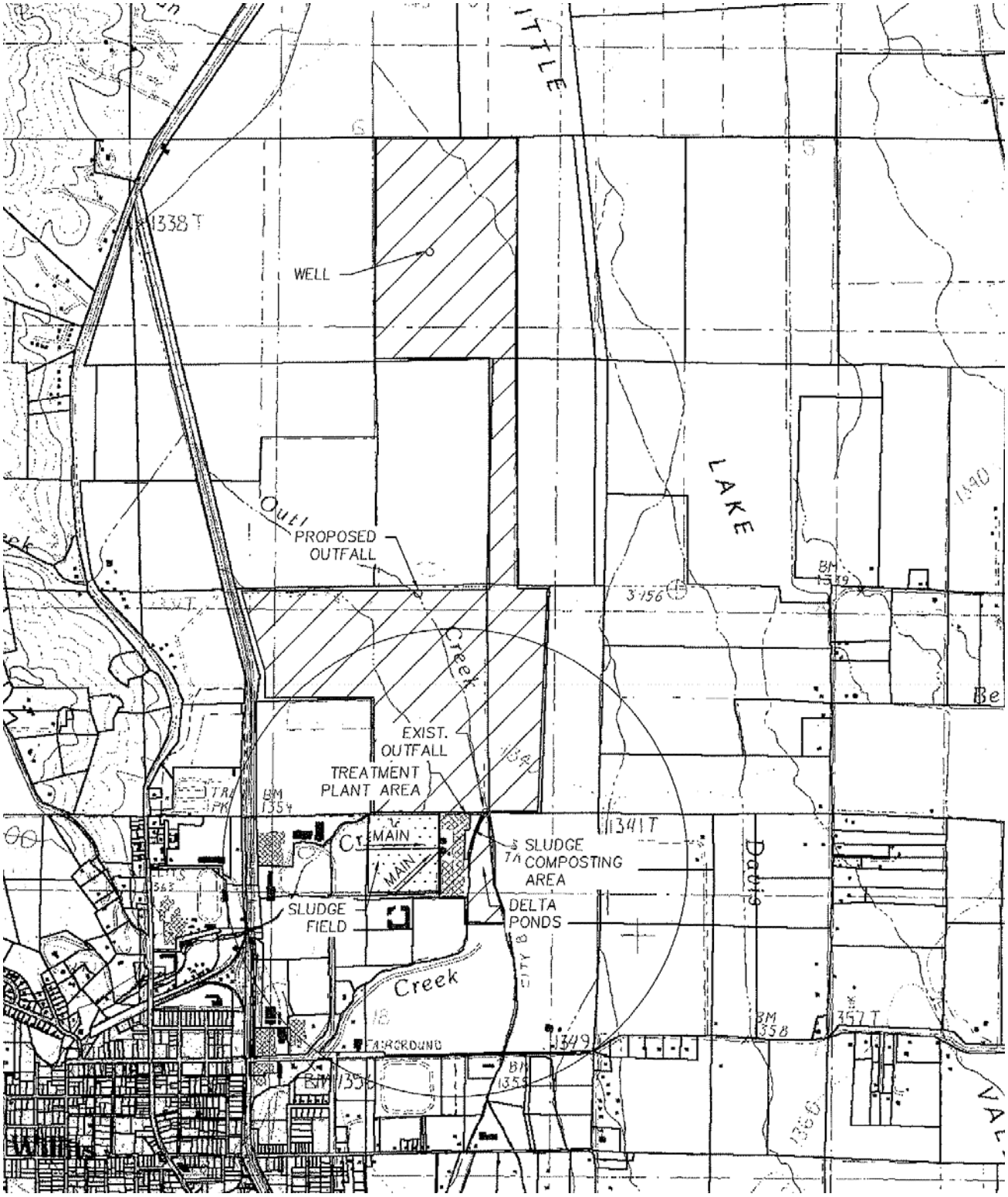

ATTACHMENT C – FLOW SCHEMATIC

Figure C-1. New WWTF Schematic

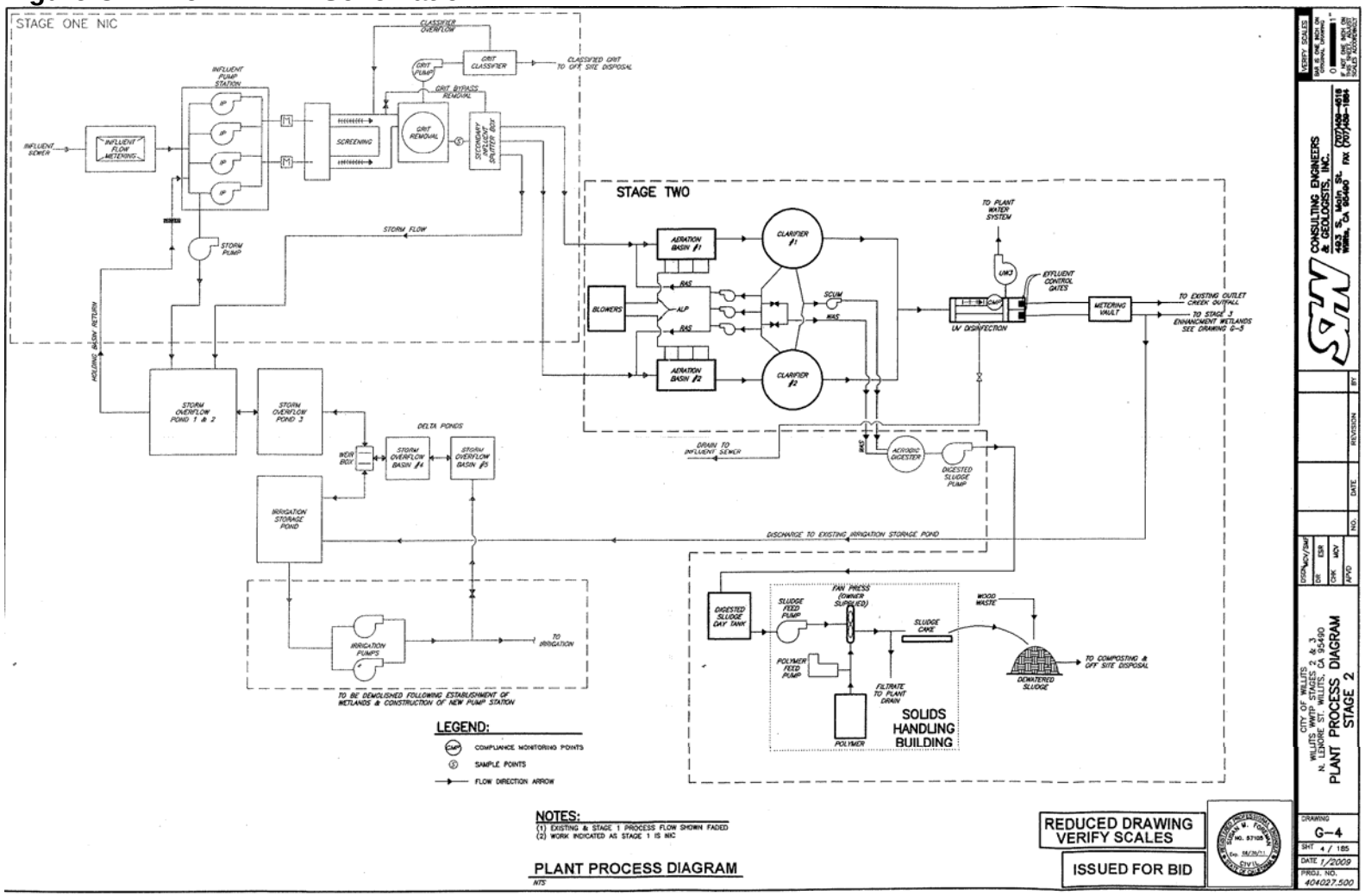

Figure C-2. New Enhancement Wetland Storage Pond Schematic

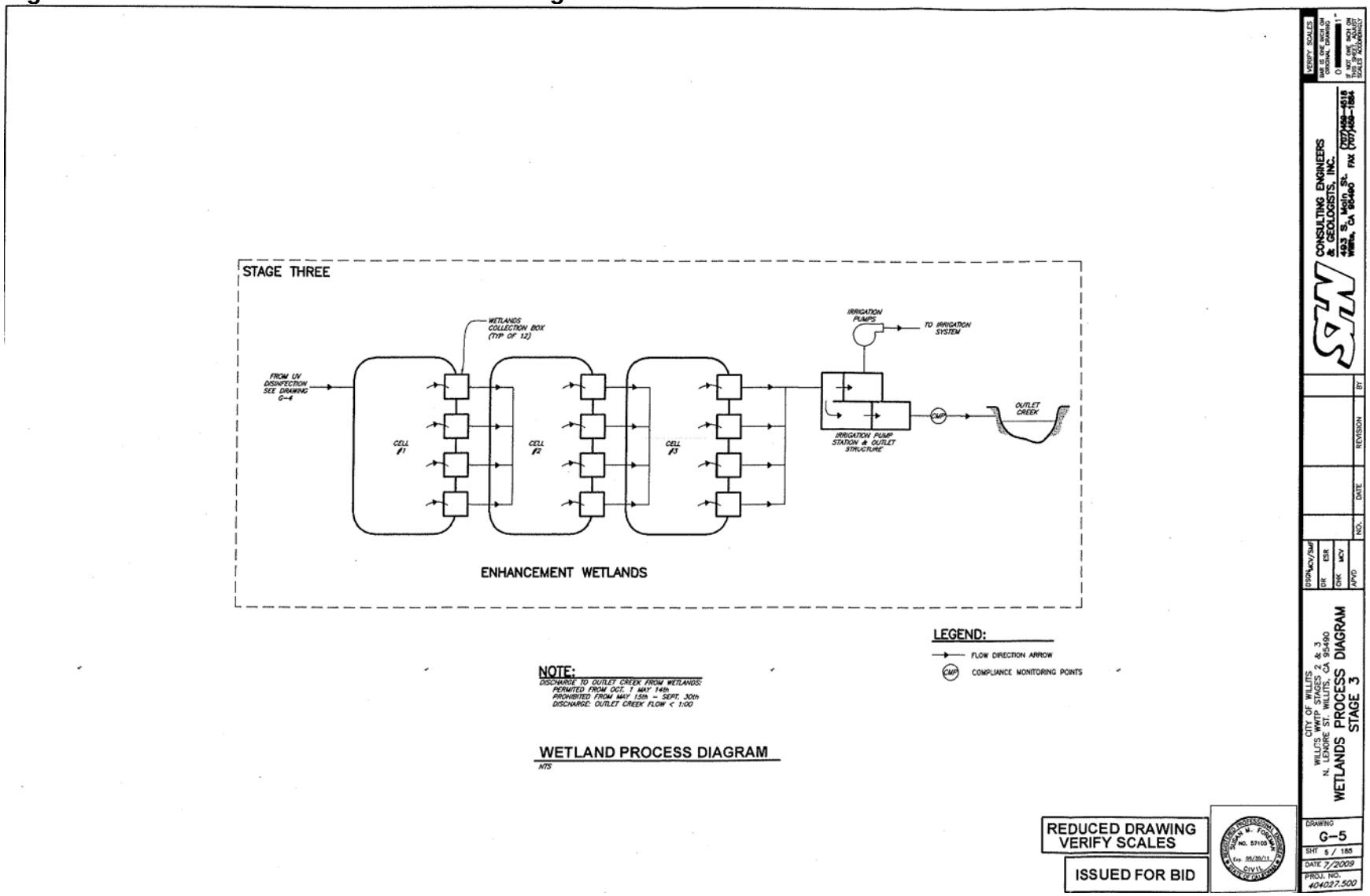

Figure C-3. Existing WWTF Schematic

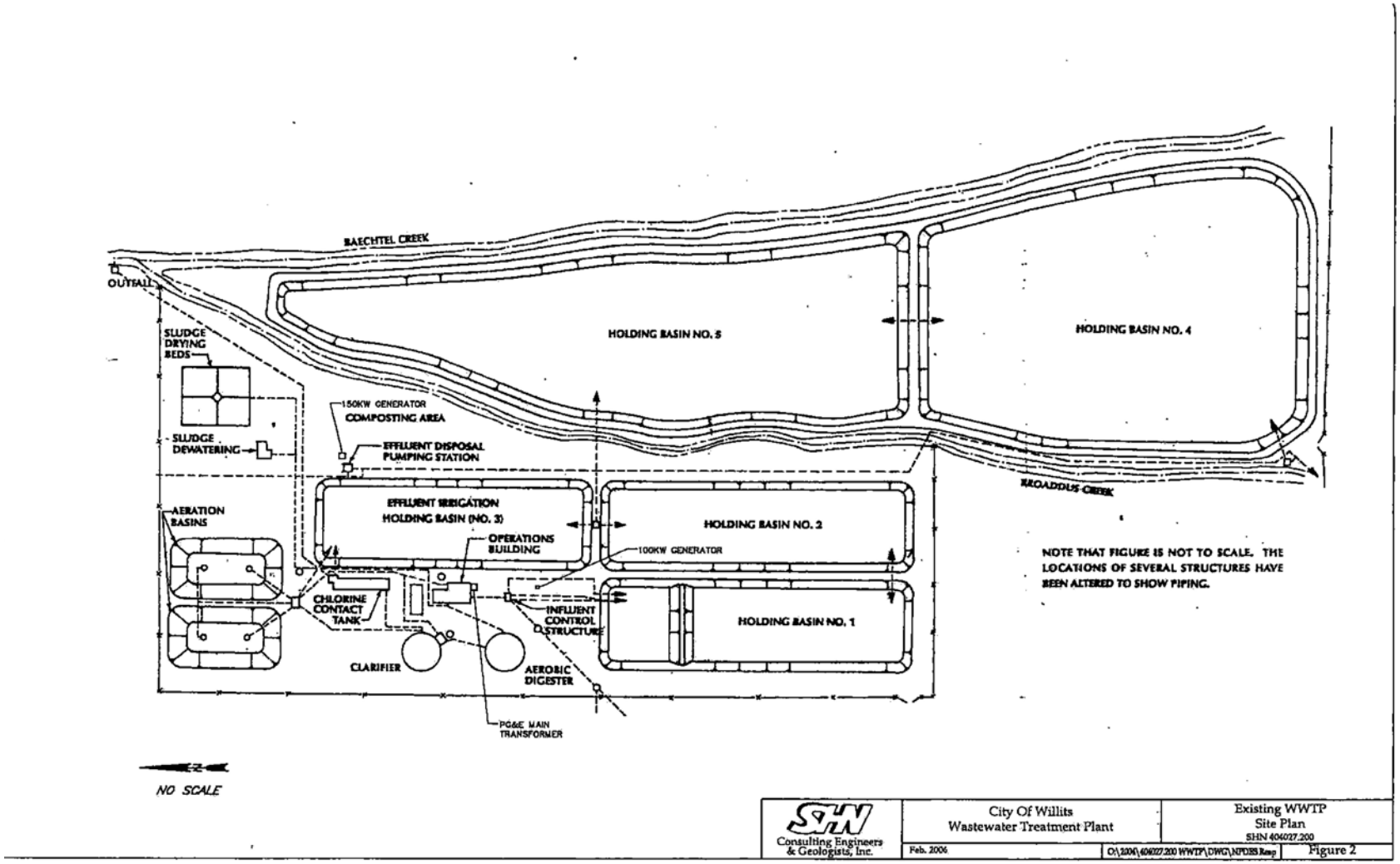

ATTACHMENT D – STANDARD PROVISIONS

I. STANDARD PROVISIONS – PERMIT COMPLIANCE

A. Duty to Comply

1. The Discharger must comply with all of the conditions of this Order. Any noncompliance constitutes a violation of the Clean Water Act (CWA) and the California Water Code and is grounds for enforcement action, for permit termination, revocation and reissuance, or modification; or denial of a permit renewal application. (40 CFR 122.41(a).)

2. The Discharger shall comply with effluent standards or prohibitions established under section 307(a) of the CWA for toxic pollutants and with standards for sewage sludge use or disposal established under section 405(d) of the CWA within the time provided in the regulations that establish these standards or prohibitions, even if this Order has not yet been modified to incorporate the requirement. (40 CFR 122.41(a)(1).)

B. Need to Halt or Reduce Activity Not a Defense

It shall not be a defense for a Discharger in an enforcement action that it would have been necessary to halt or reduce the permitted activity in order to maintain compliance with the conditions of this Order. (40 CFR 122.41(c).)

C. Duty to Mitigate

The Discharger shall take all reasonable steps to minimize or prevent any discharge or sludge use or disposal in violation of this Order that has a reasonable likelihood of adversely affecting human health or the environment. (40 CFR 122.41(d).)

D. Proper Operation and Maintenance

The Discharger shall at all times properly operate and maintain all facilities and systems of treatment and control (and related appurtenances) which are installed or used by the Discharger to achieve compliance with the conditions of this Order. Proper operation and maintenance also includes adequate laboratory controls and appropriate quality assurance procedures. This provision requires the operation of backup or auxiliary facilities or similar systems that are installed by a Discharger only when necessary to achieve compliance with the conditions of this Order. (40 CFR 122.41(e).)

E. Property Rights

1. This Order does not convey any property rights of any sort or any exclusive privileges. (40 CFR 122.41(g).)

2. The issuance of this Order does not authorize any injury to persons or property or invasion of other private rights, or any infringement of state or local law or regulations. (40 CFR 122.5(c).)

F. Inspection and Entry

The Discharger shall allow the Regional Water Board, State Water Board, United States Environmental Protection Agency (USEPA), and/or their authorized representatives (including an authorized contractor acting as their representative), upon the presentation of credentials and other documents, as may be required by law, to (40 CFR 122.41(i); Wat. Code, § 13383):

1. Enter upon the Discharger's premises where a regulated facility or activity is located or conducted, or where records are kept under the conditions of this Order (40 CFR 122.41(i)(1));

2. Have access to and copy, at reasonable times, any records that must be kept under the conditions of this Order (40 CFR 122.41(i)(2));

3. Inspect and photograph, at reasonable times, any facilities, equipment (including monitoring and control equipment), practices, or operations regulated or required under this Order (40 CFR 122.41(i)(3)); and

4. Sample or monitor, at reasonable times, for the purposes of assuring Order compliance or as otherwise authorized by the CWA or the Water Code, any substances or parameters at any location. (40 CFR 122.41(i)(4).)

G. Bypass

1. Definitions

   a. “Bypass” means the intentional diversion of waste streams from any portion of a treatment facility. (40 CFR 122.41(m)(1)(i).)

   b. “Severe property damage” means substantial physical damage to property, damage to the treatment facilities, which causes them to become inoperable, or substantial and permanent loss of natural resources that can reasonably be expected to occur in the absence of a bypass. Severe property damage does not mean economic loss caused by delays in production. (40 CFR 122.41(m)(1)(ii).)

2. Bypass not exceeding limitations. The Discharger may allow any bypass to occur which does not cause exceedances of effluent limitations, but only if it is for essential maintenance to assure efficient operation. These bypasses are not subject to the provisions listed in Standard Provisions – Permit Compliance I.G.3, I.G.4, and I.G.5 below. (40 CFR 122.41(m)(2).)

3. Prohibition of bypass. Bypass is prohibited, and the Regional Water Board may take enforcement action against a Discharger for bypass, unless (40 CFR 122.41(m)(4)(i)):

a. Bypass was unavoidable to prevent loss of life, personal injury, or severe property damage (40 CFR 122.41(m)(4)(i)(A));

b. There were no feasible alternatives to the bypass, such as the use of auxiliary treatment facilities, retention of untreated wastes, or maintenance during normal periods of equipment downtime. This condition is not satisfied if adequate back-up equipment should have been installed in the exercise of reasonable engineering judgment to prevent a bypass that occurred during normal periods of equipment downtime or preventive maintenance (40 CFR 122.41(m)(4)(i)(B)); and

c. The Discharger submitted notice to the Regional Water Board as required under Standard Provisions – Permit Compliance I.G.5 below. (40 CFR 122.41(m)(4)(i)(C).)

4. The Regional Water Board may approve an anticipated bypass, after considering its adverse effects, if the Regional Water Board determines that it will meet the three conditions listed in Standard Provisions – Permit Compliance I.G.3 above. (40 CFR 122.41(m)(4)(ii).)

5. Notice

a. Anticipated bypass. If the Discharger knows in advance of the need for a bypass, it shall submit a notice, if possible at least 10 days before the date of the bypass. (40 CFR 122.41(m)(3)(i).)

b. Unanticipated bypass. The Discharger shall submit notice of an unanticipated bypass as required in Standard Provisions - Reporting V.E below (24-hour notice). (40 CFR 122.41(m)(3)(ii).)

H. Upset

Upset means an exceptional incident in which there is unintentional and temporary noncompliance with technology based permit effluent limitations because of factors beyond the reasonable control of the Discharger. An upset does not include noncompliance to the extent caused by operational error, improperly designed

treatment facilities, inadequate treatment facilities, lack of preventive maintenance, or careless or improper operation. (40 CFR 122.41(n)(1).)

1. Effect of an upset. An upset constitutes an affirmative defense to an action brought for noncompliance with such technology based permit effluent limitations if the requirements of Standard Provisions – Permit Compliance I.H.2 below are met. No determination made during administrative review of claims that noncompliance was caused by upset, and before an action for noncompliance, is final administrative action subject to judicial review. (40 CFR 122.41(n)(2).)

2. Conditions necessary for a demonstration of upset. A Discharger who wishes to establish the affirmative defense of upset shall demonstrate, through properly signed, contemporaneous operating logs or other relevant evidence that (40 CFR 122.41(n)(3)):

a. An upset occurred and that the Discharger can identify the cause(s) of the upset (40 CFR 122.41(n)(3)(i));

b. The permitted facility was, at the time, being properly operated (40 CFR 122.41(n)(3)(ii));

c. The Discharger submitted notice of the upset as required in Standard Provisions – Reporting V.E.2.b below (24-hour notice) (40 CFR 122.41(n)(3)(iii)); and

d. The Discharger complied with any remedial measures required under Standard Provisions – Permit Compliance I.C above. (40 CFR 122.41(n)(3)(iv).)

3. Burden of proof. In any enforcement proceeding, the Discharger seeking to establish the occurrence of an upset has the burden of proof. (40 CFR 122.41(n)(4).)

II. STANDARD PROVISIONS – PERMIT ACTION

A. General

This Order may be modified, revoked and reissued, or terminated for cause. The filing of a request by the Discharger for modification, revocation and reissuance, or termination, or a notification of planned changes or anticipated noncompliance does not stay any Order condition. (40 CFR 122.41(f).)

B. Duty to Reapply

If the Discharger wishes to continue an activity regulated by this Order after the expiration date of this Order, the Discharger must apply for and obtain a new permit. (40 CFR 122.41(b).)

C. Transfers

This Order is not transferable to any person except after notice to the Regional Water Board. The Regional Water Board may require modification or revocation and reissuance of the Order to change the name of the Discharger and incorporate such other requirements as may be necessary under the CWA and the Water Code. (40 CFR 122.41(l)(3) and 122.61.)

III. STANDARD PROVISIONS – MONITORING

A. Samples and measurements taken for the purpose of monitoring shall be representative of the monitored activity. (40 CFR 122.41(j)(1).)

B. Monitoring results must be conducted according to test procedures under 40 CFR Part 136 or, in the case of sludge use or disposal, approved under 40 CFR Part 136 unless otherwise specified in 40 CFR Part 503 unless other test procedures have been specified in this Order. (40 CFR 122.41(j)(4) and 122.44(i)(1)(iv).)

IV. STANDARD PROVISIONS – RECORDS

A. Except for records of monitoring information required by this Order related to the Discharger's sewage sludge use and disposal activities, which shall be retained for a period of at least five years (or longer as required by 40 CFR Part 503), the Discharger shall retain records of all monitoring information, including all calibration and maintenance records and all original strip chart recordings for continuous monitoring instrumentation, copies of all reports required by this Order, and records of all data used to complete the application for this Order, for a period of at least three (3) years from the date of the sample, measurement, report or application. This period may be extended by request of the Regional Water Board Executive Officer at any time. (40 CFR 122.41(j)(2).)

B. Records of monitoring information shall include:

1. The date, exact place, and time of sampling or measurements (40 CFR 122.41(j)(3)(i));

2. The individual(s) who performed the sampling or measurements (40 CFR 122.41(j)(3)(ii));

3. The date(s) analyses were performed (40 CFR 122.41(j)(3)(iii));

4. The individual(s) who performed the analyses (40 CFR 122.41(j)(3)(iv));

5. The analytical techniques or methods used (40 CFR 122.41(j)(3)(v)); and

6. The results of such analyses. (40 CFR 122.41(j)(3)(vi).)

C. Claims of confidentiality for the following information will be denied (40 CFR 122.7(b)):

1. The name and address of any permit applicant or Discharger (40 CFR 122.7(b)(1)); and

2. Permit applications and attachments, permits and effluent data. (40 CFR 122.7(b)(2).)

V. STANDARD PROVISIONS – REPORTING

A. Duty to Provide Information

The Discharger shall furnish to the Regional Water Board, State Water Board, or USEPA within a reasonable time, any information which the Regional Water Board, State Water Board, or USEPA may request to determine whether cause exists for modifying, revoking and reissuing, or terminating this Order or to determine compliance with this Order. Upon request, the Discharger shall also furnish to the Regional Water Board, State Water Board, or USEPA copies of records required to be kept by this Order. (40 CFR 122.41(h); Wat. Code, § 13267.)

B. Signatory and Certification Requirements

1. All applications, reports, or information submitted to the Regional Water Board, State Water Board, and/or USEPA shall be signed and certified in accordance with Standard Provisions – Reporting V.B.2, V.B.3, V.B.4, and V.B.5 below. (40 CFR 122.41(k).)

2. All permit applications shall be signed by either a principal executive officer or ranking elected official. For purposes of this provision, a principal executive officer of a federal agency includes: (i) the chief executive officer of the agency, or (ii) a senior executive officer having responsibility for the overall operations of a principal geographic unit of the agency (e.g., Regional Administrators of USEPA). (40 CFR 122.22(a)(3).).

3. All reports required by this Order and other information requested by the Regional Water Board, State Water Board, or USEPA shall be signed by a person described in Standard Provisions – Reporting V.B.2 above, or by a duly authorized representative of that person. A person is a duly authorized representative only if:

a. The authorization is made in writing by a person described in Standard Provisions – Reporting V.B.2 above (40 CFR 122.22(b)(1));

b. The authorization specifies either an individual or a position having responsibility for the overall operation of the regulated facility or activity such as the position of plant manager, operator of a well or a well field, superintendent, position of

equivalent responsibility, or an individual or position having overall responsibility for environmental matters for the company. (A duly authorized representative may thus be either a named individual or any individual occupying a named position.) (40 CFR 122.22(b)(2)); and

c. The written authorization is submitted to the Regional Water Board and State Water Board. (40 CFR 122.22(b)(3).)

4. If an authorization under Standard Provisions – Reporting V.B.3 above is no longer accurate because a different individual or position has responsibility for the overall operation of the facility, a new authorization satisfying the requirements of Standard Provisions – Reporting V.B.3 above must be submitted to the Regional Water Board and State Water Board prior to or together with any reports, information, or applications, to be signed by an authorized representative. (40 CFR 122.22(c).)

5. Any person signing a document under Standard Provisions – Reporting V.B.2 or V.B.3 above shall make the following certification:

"I certify under penalty of law that this document and all attachments were prepared under my direction or supervision in accordance with a system designed to assure that qualified personnel properly gather and evaluate the information submitted. Based on my inquiry of the person or persons who manage the system or those persons directly responsible for gathering the information, the information submitted is, to the best of my knowledge and belief, true, accurate, and complete. I am aware that there are significant penalties for submitting false information, including the possibility of fine and imprisonment for knowing violations." (40 CFR 122.22(d).)

C. Monitoring Reports

1. Monitoring results shall be reported at the intervals specified in the Monitoring and Reporting Program (Attachment E) in this Order. (40 CFR 122.22(l)(4).)

2. Monitoring results must be reported on a Discharge Monitoring Report (DMR) form or forms provided or specified by the Regional Water Board or State Water Board for reporting results of monitoring of sludge use or disposal practices. (40 CFR 122.41(l)(4)(i).)

3. If the Discharger monitors any pollutant more frequently than required by this Order using test procedures approved under 40 CFR Part 136 or, in the case of sludge use or disposal, approved under 40 CFR Part 136 unless otherwise specified in 40 CFR Part 503, or as specified in this Order, the results of this monitoring shall be included in the calculation and reporting of the data submitted in the DMR or sludge reporting form specified by the Regional Water Board. (40 CFR 122.41(l)(4)(ii).)

4. Calculations for all limitations, which require averaging of measurements, shall utilize an arithmetic mean unless otherwise specified in this Order. (40 CFR 122.41(l)(4)(iii).)

D. Compliance Schedules

Reports of compliance or noncompliance with, or any progress reports on, interim and final requirements contained in any compliance schedule of this Order, shall be submitted no later than 14 days following each schedule date. (40 CFR 122.41(l)(5).)

E. Twenty-Four Hour Reporting

1. The Discharger shall report any noncompliance that may endanger health or the environment. Any information shall be provided orally within 24 hours from the time the Discharger becomes aware of the circumstances. A written submission shall also be provided within five (5) days of the time the Discharger becomes aware of the circumstances. The written submission shall contain a description of the noncompliance and its cause; the period of noncompliance, including exact dates and times, and if the noncompliance has not been corrected, the anticipated time it is expected to continue; and steps taken or planned to reduce, eliminate, and prevent reoccurrence of the noncompliance. (40 CFR 122.41(l)(6)(i).)

2. The following shall be included as information that must be reported within 24 hours under this paragraph (40 CFR 122.41(l)(6)(ii)):

a. Any unanticipated bypass that exceeds any effluent limitation in this Order. (40 CFR 122.41(l)(6)(ii)(A).)

b. Any upset that exceeds any effluent limitation in this Order. (40 CFR 122.41(l)(6)(ii)(B).)

3. The Regional Water Board may waive the above-required written report under this provision on a case-by-case basis if an oral report has been received within 24 hours. (40 CFR 122.41(l)(6)(iii).)

F. Planned Changes

The Discharger shall give notice to the Regional Water Board as soon as possible of any planned physical alterations or additions to the permitted facility. Notice is required under this provision only when (40 CFR 122.41(l)(1)):

1. The alteration or addition to a permitted facility may meet one of the criteria for determining whether a facility is a new source in 40 CFR 122.29(b) (40 CFR 122.41(l)(1)(i)); or

2. The alteration or addition could significantly change the nature or increase the quantity of pollutants discharged. This notification applies to pollutants that are not subject to effluent limitations in this Order. (40 CFR 122.41(l)(1)(ii).)

3. The alteration or addition results in a significant change in the Discharger's sludge use or disposal practices, and such alteration, addition, or change may justify the application of permit conditions that are different from or absent in the existing permit, including notification of additional use or disposal sites not reported during the permit application process or not reported pursuant to an approved land application plan. (40 CFR 122.41(l)(1)(iii).)

G. Anticipated Noncompliance

The Discharger shall give advance notice to the Regional Water Board or State Water Board of any planned changes in the permitted facility or activity that may result in noncompliance with General Order requirements. (40 CFR 122.41(l)(2).)

H. Other Noncompliance

The Discharger shall report all instances of noncompliance not reported under Standard Provisions – Reporting V.C, V.D, and V.E above at the time monitoring reports are submitted. The reports shall contain the information listed in Standard Provision – Reporting V.E above. (40 CFR 122.41(l)(7).)

I. Other Information

When the Discharger becomes aware that it failed to submit any relevant facts in a permit application, or submitted incorrect information in a permit application or in any report to the Regional Water Board, State Water Board, or USEPA, the Discharger shall promptly submit such facts or information. (40 CFR 122.41(l)(8).)

VI. STANDARD PROVISIONS – ENFORCEMENT

A. The Regional Water Board is authorized to enforce the terms of this permit under several provisions of the Water Code, including, but not limited to, sections 13385, 13386, and 13387.

VII. ADDITIONAL PROVISIONS – NOTIFICATION LEVELS

A. Publicly-Owned Treatment Works (POTWs)

All POTWs shall provide adequate notice to the Regional Water Board of the following (40 CFR 122.42(b)):

1. Any new introduction of pollutants into the POTW from an indirect discharger that would be subject to sections 301 or 306 of the CWA if it were directly discharging those pollutants (40 CFR 122.42(b)(1)); and

2. Any substantial change in the volume or character of pollutants being introduced into that POTW by a source introducing pollutants into the POTW at the time of adoption of the Order. (40 CFR 122.42(b)(2).)

3. Adequate notice shall include information on the quality and quantity of effluent introduced into the POTW as well as any anticipated impact of the change on the quantity or quality of effluent to be discharged from the POTW. (40 CFR 122.42(b)(3).)

ATTACHMENT E – MONITORING AND REPORTING PROGRAM

Table of Contents

I. General Monitoring Provisions E-3
II. Monitoring Locations E-4
III. Influent Monitoring Requirements E-5
  A. Monitoring Location INF-001 ..... E-5
IV. Effluent Monitoring Requirements E-5
  A. Monitoring Location EFF-001 ..... E-5
  B. Monitoring Location EFF-002 ..... E-6
  C. Monitoring Location EFF-003 ..... E-6
V. Whole Effluent Toxicity Testing Requirements E-7
VI. Land Discharge Monitoring Requirements – Not Applicable E-12
VII. Reclamation Monitoring Requirements E-13
  A. Monitoring Location EFF-004 ..... E-13
  B. Recycled Water Production and Use. E-13
VIII. Receiving Water Monitoring Requirements E-14
  A. Surface Water Monitoring Location RSW-001 ..... E-14
  B. Surface Water Monitoring Location RSW-002 ..... E-15
  C. Surface Water Monitoring Locations RSW-003 and RSW-004 ..... E-15
  D. Groundwater Monitoring E-15
IX. Other Monitoring Requirements E-16
  A. Monitoring Location INT-001 ..... E-16
  B. Septage Station Monitoring E-16
  C. Disinfection Process Monitoring for UV Disinfection System E-17
X. Reporting Requirements E-17
  A. General Monitoring and Reporting Requirements E-17
  B. Self Monitoring Reports (SMRs) E-18
  C. Discharge Monitoring Reports (DMRs) E-20
  D. Other Reports E-21
  E. Spills and Overflows Notification E-25

List of Tables

Table E-1. Test Methods and Minimum Levels for Priority Pollutants E-3
Table E-2. Monitoring Station Locations E-4
Table E-3. Influent Monitoring E-5
Table E-4. Effluent Monitoring – Monitoring Location EFF-001 ..... E-5
Table E-5. Effluent Monitoring – Monitoring Location EFF-002 ..... E-6
Table E-6. Effluent Monitoring – Monitoring Location EFF-003 ..... E-7
Table E-7. Recycled Water Effluent Monitoring – Monitoring Location EFF-004 ..... E-13

Table E-8. Recycled Water Production and Use E-13
Table E-9. Receiving Water Monitoring Requirements – RSW-001 ..... E-14
Table E-10. Receiving Water Monitoring Requirements – RSW-002 ..... E-15
Table E-11. Receiving Water Monitoring Requirements – RSW-003 and RSW-004 ..... E-15
Table E-12. Internal Monitoring Requirements – INT-001 ..... E-16
Table E-13. Septage Monitoring Requirements – SEP-001 ..... E-16
Table E-14. Monitoring Periods and Reporting Schedule E-18

ATTACHMENT E – MONITORING AND REPORTING PROGRAM (MRP)

Title 40 of the Code of Federal Regulations section 122.48 (40 CFR 122.48) requires that all National Pollutant Discharge Elimination System (NPDES) permits specify monitoring and reporting requirements. California Water Code (CWC) sections 13267 and 13383 also authorize the Regional Water Quality Control Board (Regional Water Board) to require technical and monitoring reports. This MRP establishes monitoring and reporting requirements, which implement the federal and California regulations.

I. GENERAL MONITORING PROVISIONS

A. Composite samples may be taken by a proportional sampling device approved by the Executive Officer or by grab samples composited in proportion to flow. In compositing grab samples, the sampling interval shall not exceed 1 hour.

B. If the Discharger monitors any pollutant more frequently than required by this Order, using test procedures approved by 40 CFR Part 136, or as specified in this Order, the results of this monitoring shall be included in the calculation and reporting of the data submitted in the monthly and annual discharger monitoring reports.

C. Laboratories analyzing monitoring samples shall be certified by the Department of Public Health (DPH; formerly the Department of Health Services), in accordance with the provision of CWC section 13176, and must include quality assurance/quality control data with their reports.

D. Compliance and reasonable potential monitoring, analyses shall be conducted using commercially available and reasonably achievable detection limits that are lower than the applicable effluent limitation. If no ML value is below the effluent limitation, the lowest ML shall be selected as the RL. Table E-1 lists the test methods the Discharger may use for compliance and reasonable potential monitoring to analyze priority pollutants with effluent limitations.

Table E-1. Test Methods and Minimum Levels for Priority Pollutants

CTR #	Constituent Types of Analytical Methods Minimum Levels (µg/L)	Types of Analytical Methods Minimum Levels (µg/L)		
		Gas Chromatography (GC)	Gas Chromatography/ Mass Spectroscopy (GCMS)	Colorimetric
14	Cyanide	---	---	5
27	Dichlorobromomethane	0.5	2	---

II. MONITORING LOCATIONS

The Discharger shall establish the following monitoring locations to demonstrate compliance with the effluent limitations, discharge specifications, and other requirements in this Order:

Table E-2.Monitoring Station Locations

Discharge Point Name	Monitoring Location Name	Monitoring Location Description
--	INF-001	Influent at the headworks of wastewater treatment facility (WWTF) prior to treatment and consisting of wastewater from both the collection system and septage receiving station.
---	CCC-001	Internal monitoring location for purposes of monitoring chlorine residual in chlorine treated wastewater within the contact chamber prior to dechlorination[1].
001	EFF-001	Treated effluent from the existing WWTF downstream of disinfection processes, before contact with the receiving water or land application.
002	EFF-002	Treated effluent from the mechanical portion of the new WWTF downstream of the disinfection processes.
003	EFF-003	Treated effluent from the new WWTF downstream of the enhancement wetland before contact with the receiving water.
004	EFF-004	Treated effluent from the new WWTF downstream of the enhancement wetland before effluent application to reclamation use area(s)
--	RSW-001	Outlet Creek surface water at the confluence of Baechtel and Broaddus Creeks upstream of and beyond influence of the discharge.
--	RSW-002[2]	Outlet Creek surface water at the point of discharge of Discharge Point 001
--	RSW-003	Outlet Creek surface water at the point of discharge of Discharge Point 003.
--	RSW-004	Outlet Creek surface water approximately 500 feet downstream of Discharge Point 003[3].
--	SEP-001	Septage receiving station after complete mixing of septage wastes and prior to the WWTF headworks

1 This requirement applies only when disinfection is performed using chlorination.
2 Only required when discharging at Discharge Point 001.
3 Upon written request from the Discharger and subsequent approval from the Executive Officer, the exact location of RSW may be changed to best reflect site specific needs and/or conditions.

III. INFLUENT MONITORING REQUIREMENTS

A. Monitoring Location INF-001

1. The Discharger shall monitor influent to the WWTF at Monitoring Location INF-001 as follows:

Table E-3.Influent Monitoring

Parameter	Units	Sample Type	Minimum Sampling Frequency	Required Analytical Test Method[4]
Biochemical Oxygen Demand (5-day @ 20°C)[5]	mg/L	24-hr Composite	Weekly	Std Method 5210B
Total Suspended Solids[6]	mg/L	24-hr Composite	Weekly	Std Method 2540D

IV. EFFLUENT MONITORING REQUIREMENTS

A. Monitoring Location EFF-001

1. When discharging at Discharge Point 001, the Discharger shall monitor effluent from the existing WWTF at Monitoring Location EFF-001 as follows.

Table E-4.Effluent Monitoring – Monitoring Location EFF-001

Parameter	Units	Sample Type	Minimum Sampling Frequency	Required Analytical Test Method[4]
Flow (Mean Daily)[5]	mgd	Meter	Continuous	--
Chlorine, Total Residual	mg/L	Grab	Daily	40 CFR Part 136
Biochemical Oxygen Demand (5-day @ 20°C)	mg/L	24-hr Composite	Weekly	Std Method 5210B
Total Suspended Solids	mg/L	24-hr Composite	Weekly	Std Method 2540D
Settleable Solids	mL/L-hr	24-hr Composite	Weekly	Std Method 2540F
pH	std units	Grab	Weekly	40 CFR Part 136
Total Coliform Organisms	MPN/100 mL	Grab	Weekly	Std Method 9221
Cyanide, Total (as CN)	µg/L	24-hr Composite	Monthly	Colorimetric[6]
Dichlorobromomethane	µg/L	Grab	Monthly	GC[7]
Ammonia Nitrogen,(as N) [7]	mg/L	Grab	Monthly	Std Method 4130

---

[4] In accordance with the current edition of *Standard Methods (std method) for the Examination of Water and Wastewater* (American Public Health Administration) or current test procedures specified in 40 CFR Part 136.

[5] Monitoring of 5-day biochemical oxygen demand (BOD_5) and total suspended solids (TSS) in the influent shall occur near simultaneously with effluent monitoring for the same parameters.

[6] Analytical methods must achieve the lowest ML specified in Appendix 4 of the SIP. In accordance with section 2.4.1 of the SIP, the Discharger shall report the reporting level (RL) and the MDL with each sample result.

Table E-4.Effluent Monitoring – Monitoring Location EFF-001

Parameter	Units	Sample Type	Minimum Sampling Frequency	Required Analytical Test Method[4]
Nitrate Nitrogen	mg/L	Grab	Monthly	Std Method 4130
Nitrite Nitrogen	mg/L	Grab	Monthly	Std Method 4130
Organic Nitrogen	mg/L	Grab	Monthly	Std Method 4500
Nitrogen, Total (as N)	mg/L	Calculation	Monthly	Std Method
Phosphorus, Total (as P)	mg/L	Grab	Monthly	Std Method 4130
Acute Toxicity	% Survival	24-hr Composite	2X / Year[8]	MRP section V
Chronic Toxicity	TUc	24-hr Composite	2X / Year[9]	MRP section V

B. Monitoring Location EFF-002

1. The Discharger shall monitor effluent from the mechanical treatment system of the new WWTF at Monitoring Location EFF-002 as follows:

Table E-5.Effluent Monitoring – Monitoring Location EFF-002

Parameter	Units	Sample Type	Minimum Sampling Frequency	Required Analytical Test Method[4]
Flow (Mean Daily)[5]	mgd	Meter	Continuous	--
Biochemical Oxygen Demand (5-day @ 20°C)	mg/L	24-hr Composite	Weekly	Std Method 5210B
Total Suspended Solids	mg/L	24-hr Composite	Weekly	Std Method 2540D
pH	std units	Grab	Weekly[7]	Standard Methods
Total Coliform Organisms	MPN/100 mL	Grab	Weekly	Std Method 9221
Ammonia Nitrogen, (as N)	mg/L	Grab	Monthly	Std Method 4130
Nitrate Nitrogen	mg/L	Grab	Monthly	Std Method 4130
Nitrite Nitrogen	mg/L	Grab	Monthly	Std Method 4130
Organic Nitrogen	mg/L	Grab	Monthly	Std Method 4500
Nitrogen, Total (as N)	mg/L	Calculation	Monthly	Std Method

C. Monitoring Location EFF-003

1. When discharging at Discharge Point 003, the Discharger shall monitor effluent from the Enhancement Wetland Storage Pond of the new WWTF at Monitoring Location EFF-003 as follows:

---

7 pH and temperature monitoring must coincide with monthly monitoring for ammonia.

8 Monitoring shall occur during the first month of surface water discharge and during the second consecutive month thereafter (i.e., if monitoring occurs in November, consecutive monitoring shall be performed in January).

Table E-6.Effluent Monitoring – Monitoring Location EFF-003[9]

Parameter	Units	Sample Type	Minimum Sampling Frequency	Required Analytical Test Method[4]
Effluent Flow (Mean Daily)[5]	mgd	Meter	Continuous	---
Settleable Solids	mL/L-hr	24-hr Composite	Weekly	Standard Method 2540F
pH	std units	Grab	Weekly[7]	Standard Methods
Cyanide, Total (as CN)	µg/L	24-hr Composite	Monthly	Colorimetric[8]
Temperature	°C	Grab	Monthly[7]	40 CFR Part 136
Ammonia Nitrogen, (as N)[8]	mg/L	Grab	Monthly	Std Method 4130
Nitrate Nitrogen	mg/L	Grab	Monthly	Std Method 4130
Nitrite Nitrogen	mg/L	Grab	Monthly	Std Method 4130
Organic Nitrogen	mg/L	Grab	Monthly	Std Method 4500
Nitrogen, Total (as N)	mg/L	Calculation	Monthly	Std Method
Hardness, Total (as $CaCO_3$)	mg/L	Grab	Monthly	Standard Methods
Phosphorus, Total (as P)	mg/L	Grab	Monthly	Std Method 4130
Acute Toxicity	% Survival	24-hr Composite	2X / Year[9]	MRP section V
Chronic Toxicity	TUc	24-hr Composite	2X / Year[9]	MRP section V
CTR Pollutants[10]	µg/L	Grab	Annually	Standard Methods[7]

V. WHOLE EFFLUENT TOXICITY TESTING REQUIREMENTS

A. Acute Toxicity Testing

The Discharger shall conduct whole effluent toxicity (WET) testing to determine compliance with the acute toxicity effluent limitations established in section IV.A.1.e and IV.B.2.e of the Order. The Discharger shall meet the following acute toxicity testing requirements:

1. **Test Frequency.** The Discharger shall conduct acute WET testing in accordance with the schedule established by this MRP, as summarized in Tables E-4 and E-6, above, when discharging to surface water.

2. **Sample Type.** For 96-hour static renewal or 96-hour static non-renewal testing, the samples shall be an 8-hour composite sample and shall be representative of the volume and quality of the discharge. When discharging at Discharge Point 001,

---

9 Once the new mechanical treatment facility is operational, sampling and analysis for compliance with EFF-003 monitoring requirements and Discharge Point 003 effluent limitations for all constituents other than nitrogen compounds shall be conducted at EFF-002 until September 30, 2012.

10 Those pollutants identified by the California Toxics Rule (CTR) at 40 CFR 131.38. Monitoring shall occur simultaneously with receiving water monitoring for CTR pollutants required by section VIII.A.1 of this MRP.

effluent samples shall be collected at Monitoring Location EFF-001. When discharging at Discharge Point 003, effluent samples shall be collected at Monitoring Location EFF-003[10]. Ammonia, pH, and temperature shall be recorded at 24-hour intervals during the test and shall be reported with the toxicity test results.

3. **Test Species.** Test species for acute testing shall be an invertebrate, the water flea, *Ceriodaphnia dubia*, and a vertebrate, the rainbow trout, *Oncorhynchus mykiss*, for at least the first two suites of tests conducted within 12 months after the effective date of the Order. After this screening period, monitoring shall be conducted using the most sensitive species. At least one time every 5 years, the Discharger shall re-screen with the two species described above and continue routine monitoring with the most sensitive species.

4. **Test Methods.** The presence of acute toxicity shall be estimated as specified in *Methods for Measuring the Acute Toxicity of Effluents and Receiving Waters to Freshwater and Marine Organisms* (USEPA Report No. EPA-821-R-02-012, 5th edition or subsequent editions), or other methods approved by the Executive Officer. Test procedures related to pH control, sample filtration, aeration, temperature control, and sample dechlorination shall be performed in accordance with the USEPA method and fully explained and justified in each acute toxicity report submitted to the Regional Water Board. Control of the pH in acute toxicity tests is allowed, provided the test pH is maintained at the measured effluent pH, and the control of pH is done in a manner that has the least influence on the test water chemistry and on the toxicity of other pH sensitive materials such as some heavy metals, sulfide, and cyanide.

5. **Test Dilutions.** The acute toxicity test shall be conducted using 100 percent effluent collected at Monitoring Location EFF-001 when discharging at Discharge Point 001 and at Monitoring Location EFF-003[10] when discharging at Discharge Point 003.

6. **Test Failure.** If an acute toxicity test does not meet all test acceptability criteria, as specified in the test method, the Discharger shall re-sample and re-test as soon as possible, not to exceed 7 days following notification of test failure.

7. **Accelerated Monitoring.** If the result of any acute toxicity test fails to meet the single test minimum limitation established in sections IV.A.1.e and IV.B.2.e of the Order (70 percent survival), and the testing meets all test acceptability criteria, the Discharger shall take two more samples, one within 14 days, and one within 21 days of receiving the initial sample result. If any of the additional samples do not comply with the three sample median minimum limitation (90 percent survival), the Discharger shall initiate a Toxicity Reduction Evaluation (TRE) in accordance with section VI.C.2.a of the Order. If the two additional samples are in compliance with the acute toxicity requirement, and the testing meets all test acceptability criteria, then TRE implementation will not be required. If the discharge has ceased before

the additional samples could be collected, the Discharger shall contact the Executive Officer within 21 days with a plan to demonstrate compliance with the acute toxicity effluent limitation.

8. **Notification.** The Discharger shall notify the Regional Water Board in writing 14 days after the receipt of test results exceeding an effluent limitation or trigger. The notification will describe actions the Discharger has taken or will take to investigate and correct the cause(s) of toxicity. It may also include a status report on any actions required by this Order, with a schedule for actions not yet completed. If no actions have been taken, the reasons shall be given.

9. **Reporting.** Test results for acute toxicity tests shall be reported according to section 12 (Report Preparation) of *Methods for Measuring the Acute Toxicity of Effluents and Receiving Waters to Freshwater and Marine Organisms* or in an equivalent format that clearly demonstrates that the Discharger is in compliance with effluent limitations and other permit requirements.

10. **Ammonia Toxicity.** The acute toxicity test shall be conducted without modifications to eliminate ammonia toxicity.

B. Chronic Toxicity Testing

The Discharger shall conduct chronic WET testing to demonstrate compliance with the Basin Plan's narrative water quality objective for toxicity. The Discharger shall meet the following chronic toxicity testing requirements:

1. **Test Frequency.** The Discharger shall conduct chronic WET testing in accordance with the schedule established by this MRP, as summarized in Tables E-4 and E-6, above, when discharging to surface water.

2. **Sample Type.** For 96-hour static renewal or 96-hour static non-renewal testing, the samples shall be 24-hour composite samples and shall be representative of the volume and quality of the discharge. When discharging at Discharge Point 001, effluent samples shall be collected at Monitoring Location EFF-001. When discharging at Discharge Point 003, effluent samples shall be collected at Monitoring Location EFF-003[10].

3. **Test Species.** Test species for chronic testing shall be a vertebrate, the fathead minnow, *Pimephales promelas* (larval survival and growth test); an invertebrate, the water flea, *Ceriodaphnia dubia* (survival and reproduction test); and a plant, the green alga, *Selanastrum capricornutum* (growth test).

4. **Test Methods.** The presence of chronic toxicity shall be estimated as specified in USEPA's *Short-Term Methods for Estimating the Chronic Toxicity of Effluents and Receiving Water to Freshwater Organisms* (USEPA Report No. EPA-821-R-02-013, 4th or subsequent editions). Test procedures related to pH control, sample filtration,

aeration, temperature control, and sample dechlorination shall be performed in accordance with the USEPA method and fully explained and justified in each chronic toxicity report submitted to the Regional Water Board. Control of the pH in chronic toxicity tests is allowed, provided the test pH is maintained at the measured pH of the downstream receiving water, and the control of pH is done in a manner that has the least influence on the test water chemistry and on the toxicity of other pH sensitive materials such as some heavy metals, sulfide, and cyanide.

5. **Test Dilutions.** The chronic toxicity test shall be conducted using a series of at least five dilutions and a control. The series shall consist of the following dilution series: 25, 50, 70, 85, and 100 percent effluent. Control and dilution water should be receiving water at an appropriate location upstream of the discharge point. Laboratory water may be substituted for receiving water, as described in the manual, upon approval by the Regional Water Board Executive Officer. Specifically, for the *Selenastrum capricornutum* test, synthetic laboratory water with a hardness similar to the receiving water shall be used as the control and dilution water. If the dilution water used is different from the culture water, a second control using culture water shall be used.

6. **Reference Toxicant.** If organisms are not cultured in-house, concurrent testing with a reference toxicant shall be conducted. Where organisms are cultured in-house, monthly reference toxicant testing is sufficient. Reference toxicant tests also shall be conducted using the same test conditions as the effluent toxicity tests (e.g., same test duration, etc.).

7. **Test Failure.** If either the reference toxicant test or the chronic toxicity test does not meet all test acceptability criteria, as specified in the test method, the Discharger shall re-sample and re-test as soon as possible, not to exceed 14 days following notification of test failure.

8. **Notification.** The Discharger shall notify the Regional Water Board in writing within 14 days after the receipt of test results that indicate an exceedance of the monitoring trigger for chronic toxicity during regular or accelerated monitoring.

9. **Accelerated Monitoring Requirements.** If the result of any chronic toxicity test exceeds a chronic toxicity trigger of 1.0 TUc, and the testing meets all test acceptability criteria, the Discharger shall initiate accelerated monitoring. Accelerated monitoring shall consist of four additional effluent samples, on test conducted approximately every week, over a 4-week period. Testing shall commence within 14 days of receipt of the sample results of the exceedance of the chronic toxicity trigger. If the discharge will cease before the additional samples can be collected, the Discharger shall contact the executive Officer within 21 days with a plan to demonstrate compliance with the Basin Plan's narrative water quality objective for toxicity. The following protocol shall be used for accelerated monitoring and TRE implementation.

a. If the results of four consecutive accelerated monitoring tests do not exceed the chronic toxicity trigger, the Discharger may cease accelerated monitoring and resume regular chronic toxicity monitoring. If there is adequate evidence of a pattern of effluent toxicity, however, the Regional Water Board Executive Officer may require that the Discharger initiate a TRE.

b. If the source(s) of the toxicity is easily identified (i.e., temporary plant upset), the Discharger shall make necessary corrections to the facility and shall continue accelerated monitoring until four consecutive accelerated tests do not exceed the chronic toxicity trigger. Upon confirmation that the effluent toxicity has been removed, the Discharger may cease accelerated monitoring and resume regular chronic toxicity monitoring.

c. If the result of any accelerated toxicity test exceeds the chronic toxicity trigger, the Discharger shall cease accelerated monitoring and initiate a TRE to investigate the cause(s) of, and identify corrective actions to reduce or eliminate effluent toxicity. Within thirty (30) days of notification by the laboratory of the test results exceeding the chronic toxicity trigger during accelerated monitoring, the Discharger shall submit a TRE Action Plan to the Regional Water Board including, at minimum:

i. Specific actions the Discharger took to investigate and identify the cause(s) of toxicity, including a TRE WET monitoring schedule;

ii. Specific actions the Discharger took to mitigate the impact of the discharge and prevent the recurrence of toxicity;

iii. Recommendations for further actions to mitigate continued toxicity, if needed; and

iv. A schedule for implementation of recommended actions.

10. Ammonia Toxicity. The chronic toxicity test shall be conducted without modifications to eliminate ammonia toxicity.

C. Chronic Toxicity Reporting Requirements

1. Routine Reporting. Test results for chronic tests shall be reported according to the acute and chronic manuals and the Monitoring and Reporting Program and shall be attached to the corresponding monthly self-monitoring report. Test results shall include, at minimum, for each test:

a. Sample date(s);
b. Test initiation date;
c. Test species;

d. End point values for each dilution (e.g., number of young, growth rate, percent survival);
e. NOEC value(s) in percent effluent;
f. IC15, IC25, IC40, and IC50 values (or EC15, EC25…etc.) in percent effluent;
g. TUc values (100/NOEC);
h. Mean percent mortality (±s.d.) after 96 hours in 100 percent effluent (if applicable);
i. NOEC and LOEC values for reference toxicant test(s);
j. IC50 and EC50 value(s) for reference toxicant test(s);
k. Available water quality measurements for each test (e.g., pH, dissolved oxygen, temperature, conductivity, hardness, salinity, ammonia);
l. Statistical methods used to calculate endpoints; and
m. The statistical output page, which includes the calculation of percent minimum significant difference (PMSD).

2. **Quality Assurance Reporting.** Because the permit requires sublethal hypothesis testing endpoints from Methods 1000.0, 1002.0, and 1003.0 in the test methods manual titled *Short-term Methods for Estimating the Chronic Toxicity of Effluents and Receiving Waters to Freshwater Organisms* (EPA-821-R-02-013, 2002), with-in test variability must be reviewed for acceptability, and variability criteria (upper and lower PMSD bounds) must be applied, as directed under section 10.2.8 – *Test Variability* of the test methods manual. Under section 10.2.8, the calculated PMSD for both reference toxicant test and effluent toxicity test results must be compared with the upper and lower PMSD bounds variability criteria specified in Table 6 – *Variability Criteria (Upper and Lower PMSD Bounds) for Sublethal Hypothesis Testing Endpoints Submitted Under NPDES Permits*, following the review criteria in paragraphs 10.2.8.2.1 through 10.2.8.2.5 of the test methods manual. Based on this review, only accepted effluent toxicity test results shall be reported.

3. **Compliance Summary.** Monthly self-monitoring reports submitted by the Discharger shall contain an updated chronology of chronic toxicity test results expressed in TUc, and organized by test species, type of test (survival, growth, or reproduction), and monitoring frequency (routine, accelerated, or TRE). The final report shall clearly demonstrate that the Discharger is in compliance with effluent limitations and other permit requirements.

VI. LAND DISCHARGE MONITORING REQUIREMENTS – NOT APPLICABLE

This section is not applicable to the Discharger as treated wastewater is not discharged to or applied to land for the purpose of disposal. The Discharger reclaims treated wastewater thus the Discharger has Reclamation Monitoring Requirements rather than Land Discharge Monitoring Requirements.

VII. RECLAMATION MONITORING REQUIREMENTS

A. Monitoring Location EFF-004

1. The Discharger shall monitor treated effluent from the new WWTF downstream of the enhancement wetland before effluent application to reclamation use area(s) at Monitoring Location EFF-004 as follows:

Table E-7.Recycled Water Effluent Monitoring – Monitoring Location EFF-004

Parameter	Units	Sample Type	Minimum Sampling Frequency	Required Analytical Test Method[4]
Flow (Mean Daily)[5]	mgd	Meter	Continuous	--
pH	std units	Grab	Weekly	Standard Methods
Ammonia Nitrogen, (as N)[8]	mg/L	Grab	Monthly	Std Method 4130
Nitrate Nitrogen	mg/L	Grab	Monthly	Std Method 4130
Nitrite Nitrogen	mg/L	Grab	Monthly	Std Method 4130
Organic Nitrogen	mg/L	Grab	Monthly	Std Method 4500
Nitrogen, Total (as N)	mg/L	Calculation	Monthly	Std Method

B. Recycled Water Production and Use.

Recycled water quality characteristics and precipitation data shall be used to ascertain nitrogen loading rates at each recycled water use site. The following information shall be reported for each use site:

Table E-8.Recycled Water Production and Use

Parameter	Units	Sample Type	Minimum Sampling Frequency
Volume of recycled water[11]	Acre-feet	Meter	Monthly
Total area of application	Acres	Observation	Monthly
Total Nitrogen (as N) application rate[12,13]	lbs N/acre-month	Calculation	Monthly

[11] Estimation of the volume of recycled water shall not include other potable or non-potable "make-up" water used in conjunction with recycled water.

[12] Nitrogen application rate shall consider nitrogen content of the recycled water, based on analytical data obtained at the point of discharge.

Table E-8.Recycled Water Production and Use

Parameter	Units	Sample Type	Minimum Sampling Frequency
Rainfall	Inches	Gage	Daily

VIII. RECEIVING WATER MONITORING REQUIREMENTS

A. Surface Water Monitoring Location RSW-001

1. The Discharger shall monitor Outlet Creek at Monitoring Location RSW-001 when discharging to surface water as follows:

Table E-9.Receiving Water Monitoring Requirements – RSW-001

Parameter	Units	Sample Type	Minimum Sampling Frequency	Required Analytical Test Method[4]
Flow	mgd	Gauge or Meter[14]	Daily	--
Visual Observations	--	Visual[15]	Weekly	--
pH	std units	Grab	Monthly[4]	40 CFR Part 136
Dissolved Oxygen	mg/L	Grab	Monthly	40 CFR Part 136
Electrical Conductivity @ 25°C	µmhos/cm	Grab	Monthly	40 CFR Part 136
Hardness, Total (as $CaCO_3$)	mg/L	Grab	Monthly	Standard Methods
Temperature	°C	Grab	Monthly[4]	40 CFR Part 136
Turbidity	NTU	Grab	Monthly	Standard Method 2130B
Phosphorus, Total (as P)	mg/L	Grab	Monthly	Std Method 4130
Ammonia Nitrogen, (as N)[8]	mg/L	Grab	Monthly	Std Method 4130
Nitrate Nitrogen	mg/L	Grab	Monthly	Std Method 4130
Nitrite Nitrogen	mg/L	Grab	Monthly	Std Method 4130
Organic Nitrogen	mg/L	Grab	Monthly	Std Method 4500
Nitrogen, Total (as N)	mg/L	Calculation	Monthly	Std Method
CTR Pollutants[16]	µg/L	Grab	Annually	Standard Methods[8]

[13] Nitrogen concentrations shall be calculated and reported "as N". For example, nitrate-nitrogen= 27 mg/L as NO_3 shall be converted and reported as nitrate-nitrogen = 6.1 mg/L as N using a conversion factor of 14.0067 (N)/62.0049 (NO_3)

[14] The Discharger shall propose a method of measurement for the receiving water flow for approval by the Executive Officer.

[15] Visual observations shall be made for evidence of floatables (i.e., solids, liquids, foam, and scum), visible films (i.e., oils, greases, and waxes), aquatic growths, and discoloration. Observations shall be recorded and included in the monthly self-monitoring reports.

[16] Those pollutants identified by the CTR at 40 CFR 131.38. Monitoring shall occur simultaneously with effluent monitoring for CTR pollutants required by section IV. of this MRP.

B. Surface Water Monitoring Location RSW-002

1. The Discharger shall monitor Outlet Creek at Monitoring Location RSW-002 when discharging to surface water from themechanical treatment facility as follows:

Table E-10. Receiving Water Monitoring Requirements – RSW-002

Parameter	Units	Sample Type	Minimum Sampling Frequency	Required Analytical Test Method[1]
Visual Observations	--	Visual[15]	Weekly	--
pH	std units	Grab	Monthly[4]	40 CFR Part 136
Dissolved Oxygen	mg/L	Grab	Monthly	40 CFR Part 136
Electrical Conductivity @ 25°C	µmhos/cm	Grab	Monthly	40 CFR Part 136
Temperature	°C	Grab	Monthly[4]	40 CFR Part 136
Turbidity	NTU	Grab	Monthly	Standard Method 2130B

C. Surface Water Monitoring Locations RSW-003 and RSW-004

1. The Discharger shall monitor Outlet Creek at Monitoring Locations RSW-003 and RSW-004 when discharging to surface water, as follows:

Table E-11. Receiving Water Monitoring Requirements – RSW-003 and RSW-004

Parameter	Units	Sample Type	Minimum Sampling Frequency	Required Analytical Test Method[1]
Visual Observations	--	Visual[15]	Weekly	--
pH	std units	Grab	Monthly[4]	40 CFR Part 136
Dissolved Oxygen	mg/L	Grab	Monthly	40 CFR Part 136
Electrical Conductivity @ 25°C	µmhos/cm	Grab	Monthly	40 CFR Part 136
Temperature	°C	Grab	Monthly[4]	40 CFR Part 136
Turbidity	NTU	Grab	Monthly	Standard Method 2130B

D. Groundwater Monitoring

This MRP does not require groundwater monitoring at this time. The Order does not permit treated wastewater to be land applied for the purpose of disposal. The Order does include a special study under section VI.C.2, which requires evaluation of reclamation/irrigation uses of treated wastewater. Should the special study indicate potential impacts to groundwater, this section of the MRP will be revised.

IX. OTHER MONITORING REQUIREMENTS

A. Monitoring Location INT-001

When discharging at Discharge Point 001, the Discharger shall monitor chlorine residual at the existing WWTF in the chlorine contact chamber at Monitoring Location INT-001, as follows.

Table E-12. Internal Monitoring Requirements – INT-001

Parameter	Units	Sample Type	Minimum Sampling Frequency	Required Analytical Test Method[1]
Chlorine, Total Residual	mg/L	Grab	Daily	40 CFR Part 136

B. Septage Station Monitoring

1. Monitoring Location SEP-001

a. For each septage load delivered to the treatment facility, the Discharger shall require the hauler to collect and report a pH value representative of the load.

b. The Discharger shall estimate, prior to the beginning of a quarterly and semiannual monitoring period, the number of anticipated septage deliveries for the given monitoring frequency, and generate a random load number from this total. When the delivery corresponding to the pre-chosen random number is received, the Discharger will collect a representative septage sample and have the samples analyzed in accordance with Table E-13 and with standard sample collection and handling procedures. Each sample analyzed in accordance with the following table.

Table E-13. Septage Monitoring Requirements – SEP-001

Parameter	Units	Sample Type	Minimum Sampling Frequency	Required Analytical Test Method[1]
pH	std units	Grab	Weekly	40 CFR Part 136
Chemical Oxygen Demand	mg/L	Grab	Quarterly	Standard Method 5220
Oil and Grease	mg/L	Grab	Quarterly	EPA Method 1664
Metals and Trace Elements	µg/L	Grab	Quarterly	EPA Method 200.7
Purgeable Organic Compounds	µg/L	Grab	Semiannually	EPA Method 624
Semivolatile Organic Compounds	µg/L	Grab	Semiannually	EPA Method 625

2. Septage Hauler Tracking

For any month when septage waste is received by the treatment facility or collection system, the source(s) of the waste shall be documented. A summary table of all septage discharged to the WWTF shall be submitted quarterly and shall include:

a. Date and time of discharge

b. Name, County ID number, and District ID number of the hauler

c. Volume discharged

d. Source(s) of the waste

e. pH of septage load

C. Disinfection Process Monitoring for UV Disinfection System

Upon completion and approval of the UV disinfection system, the following monitoring requirements must be implemented.

1. **Monitoring.** The UV transmittance of the effluent from the UV disinfection system shall be monitored continuously and recorded. The operation UV dose shall be calculated from UV transmittance, UV intensity, turbidity, and exposure time, using lamp age and sleeve fouling factors.

2. **Reporting.** The Discharger shall report daily average and lowest daily transmittance and operational UV dose on its monthly monitoring reports. If the UV transmittance falls below 65 percent or UV dose falls below 50 mJ/cm^2, the event shall be reported to the Regional Water Board by telephone within 24 hours and documented in a narrative description to accompany the applicable routine monthly self monitoring report.

X. REPORTING REQUIREMENTS

A. General Monitoring and Reporting Requirements

1. The Discharger shall comply with all Standard Provisions (Attachment D) related to monitoring, reporting, and recordkeeping.

2. **Special Study.** The Discharger shall submit all reports and documentation required by the special study established by this Order. Such reports and documentation shall be submitted to the Regional Water Board on or before each compliance date established by the Order. If noncompliance is reported, the Discharger shall describe the reasons for noncompliance and a specific date when compliance will be

achieved. The Discharger shall notify the Regional Water Board when it returns to compliance with applicable compliance dates.

B. Self Monitoring Reports (SMRs)

1. At any time during the term of this permit, the State or Regional Water Board may notify the Discharger to electronically submit Self-Monitoring Reports (SMRs) using the State Water Board's California Integrated Water Quality System (CIWQS) Program Web site (http://www.waterboards.ca.gov/ciwqs/index.html). Until such notification is given, the Discharger shall submit hard copy SMRs. The CIWQS Web site will provide additional directions for SMR submittal in the event there will be service interruption for electronic submittal.

2. The Discharger shall report in the SMR the results for all monitoring specified in this MRP under sections III through IX. The Discharger shall submit monthly SMRs including the results of all required monitoring using USEPA-approved test methods or other test methods specified in this Order. If the Discharger monitors any pollutant more frequently than required by this Order, the results of this monitoring shall be included in the calculations and reporting of the data submitted in the SMR.

3. All monitoring results shall include complete laboratory data sheets for each analysis and be submitted in conjunction with the monthly SMR on the fist day of the second month following sample collection. Annual summary reports shall be submitted by March 1st each year.

4. Monitoring periods for all required monitoring shall be completed according to the following schedule:

Table E-14. Monitoring Periods and Reporting Schedule

Sampling Frequency	Monitoring Period Begins On	Monitoring Period
Continuous	August 1, 2010	All
Daily	August 1, 2010	(Midnight through 11:59 PM) or any 24-hour period that reasonably represents a calendar day for purposes of sampling.
Weekly	August 1, 2010	Sunday through Saturday
Monthly	August 1, 2010	1st day of calendar month through last day of calendar month
2X / Year	October 1, 2010	1st month of surface water discharge and during the 2nd consecutive month thereafter
Quarterly	July 1, 2010	January 1 through March 31 April 1 through June 30 July 1 through September 30 October 1 through December 31

Table E-14. Monitoring Periods and Reporting Schedule

Sampling Frequency	Monitoring Period Begins On	Monitoring Period
Semiannually	July 1, 2010	January 1 through June 30 July 1 through December 31
Annually	January 1, 2010	January 1 through December 31
Twice per Permit Term	August 1, 2010	August 1, 2010 through July 30, 2013

5. **Reporting Protocols**. The Discharger shall report with each sample result the applicable Minimum Level (ML), the reporting level (RL) and the current Method Detection Limit (MDL), as determined by the procedure in Part 136.

   The Discharger shall report the results of analytical determinations for the presence of chemical constituents in a sample using the following reporting protocols:

   a. Sample results greater than or equal to the reported ML shall be reported as measured by the laboratory (i.e., the measured chemical concentration in the sample).

   b. Sample results less than the RL, but greater than or equal to the laboratory's MDL, shall be reported as "Detected, but Not Quantified," or DNQ. The estimated chemical concentration of the sample shall also be reported.

      For the purposes of data collection, the laboratory shall write the estimated chemical concentration next to DNQ as well as the words "Estimated Concentration" (may be shortened to "Est. Conc."). The laboratory may, if such information is available, include numerical estimates of the data quality for the reported result. Numerical estimates of data quality may be percent accuracy (+ a percentage of the reported value), numerical ranges (low to high), or any other means considered appropriate by the laboratory.

   c. Sample results less than the laboratory's MDL shall be reported as "Not Detected," or ND.

   d. Dischargers are to instruct laboratories to establish calibration standards so that the ML value (or its equivalent if there is differential treatment of samples relative to calibration standards) is the lowest calibration standard. At no time is the Discharger to use analytical data derived from extrapolation beyond the lowest point of the calibration curve.

6. **Self Monitoring Reports**. The Discharger shall submit self monitoring reports (SMRs) in accordance with the following requirements:

   a. The Discharger shall arrange all reported data in a tabular format. The data shall be summarized to clearly illustrate whether the facility is operating in compliance with interim and/or final effluent limitations. The Discharger is not required to

duplicate the submittal of data that is entered in a tabular format within CIWQS. When electronic submittal of data is required and CIWQS does not provide for entry into a tabular format within the system, the Discharger shall electronically submit the data in a tabular format as an attachment.

b. The Discharger shall attach a cover letter to the SMR. The information contained in the cover letter shall clearly identify:

i. Facility name and address;

ii. WDID number;

iii. Applicable period of monitoring and reporting;

iv. Violations of the WDRs (identified violations must include a description of the requirement that was violated and a description of the violation);

v. Corrective actions taken or planned; and

vi. The proposed time schedule for corrective actions.

c. SMRs must be submitted to the Regional Water Board, signed and certified as required by the Standard Provisions (Attachment D), to the address listed below:

Regional Water Quality Control Board
North Coast Region
5550 Skylane Blvd., Suite A
Santa Rosa, CA 95403

C. Discharge Monitoring Reports (DMRs)

1. As described in section X.B.1 above, at any time during the term of this permit, the State or Regional Water Board may notify the Discharger to electronically submit SMRs that will satisfy federal requirements for submittal of Discharge Monitoring Reports (DMRs). Until such notification is given, the Discharger shall submit DMRs in accordance with the requirements described below.

2. DMRs must be signed and certified as required by the standard provisions (Attachment D). The Discharger shall submit the original DMR and one copy of the DMR to the address listed below:

STANDARD MAIL	FEDEX/UPS/ OTHER PRIVATE CARRIERS
State Water Resources Control Board Division of Water Quality c/o DMR Processing Center PO Box 100 Sacramento, CA 95812-1000	State Water Resources Control Board Division of Water Quality c/o DMR Processing Center 1001 I Street, 15th Floor Sacramento, CA 95814

3. All discharge monitoring results must be reported on the official USEPA pre-printed DMR forms (EPA Form 3320-1). Forms that are self-generated or modified cannot be accepted.

D. Other Reports

1. **Special Study Submittals.** The Discharger shall report the results of the special studies required by Special Provision VI.C.2 of this Order.

2. **Water Reclamation System**

   a. **Reclamation Operations Reporting.** Upon completion and start-up of the Discharger's reclamation system, the Discharger shall submit reports pertaining to the operation, performance, monitoring, and other activities related to water reclamation as follows:

      i. **Quarterly Recycled Water Report.** The Discharger shall submit a quarterly recycled water summary report, as required by section 13523.1(b)(4) of the Water Code, containing the following information:

         (a) Total volume of recycled water supplied to each recycled water user for each month of the reporting period;

         (b) Total number of recycled water use sites;

         (c) Locations of recycled water use sites, including a map and tabular summary with acreage and name of property owner;

         (d) A summary of recycled water use site inspections conducted by the Discharger, including inspection dates and identification of recycled water user violations, including:

            (1) all observations of recycled water overapplication and/or runoff,

(2) misuse of recycled water,

(3) cross-connections and/or improper backflow prevention devices, and

(4) any other violations of the Master Reclamation Permit or the Discharger's rules and regulations;

(e) A summary of operational problems, plant equipment malfunctions, and any diversion of recycled water which does not meet the requirements specified in this Order.

(f) Documentation of notifications to users if any recycled water was delivered that did not meet the requirements specified in this Order.

(g) A record of equipment or process failures initiating an alarm, as well as any corrective and preventative actions;

ii. Annual Recycled Water Report. The annual report shall contain the following:

(a) A compliance summary and discussion of the compliance record for the prior calendar year, including:

(1) If violations occurred, the report shall also discuss the corrective actions taken and planned to bring the reclamation program into full compliance with this Order.

(2) An evaluation verifying that the application of recycled water to each use area occurred at reasonable agronomic rates identified in the Irrigation Management Plans required by section C.5 of Attachment H and utilizing the data required by Table E-7 of the MRP. If the agronomic rate evaluation determines that exceedances of the agronomic rate may be occurring, the Discharger shall identify and implement corrective actions to ensure recycled water use occurs at reasonable agronomic rates.

(3) Certification that all reasonable BMPs and management practices were implemented to ensure efficient and compliant operation of the recycled water system.

(4) Identification of any other problems that occurred in the recycled water system during the prior year and plans to rectify those problems in the coming year.

(b) A summary of scheduled and nonscheduled maintenance of the reclamation system appurtenances and irrigation areas;

(c) Enforcement and monitoring activities that occurred during the previous year, and identification of any problems and how the problems were addressed;

(d) A summary of all cross-connection testing and back-flow prevention activities (inspections, maintenance) and a summary of any problems identified, or certification that no problems occurred.

(e) The Discharger shall document compliance with California Health and Safety Code section 116815 regarding the installation and marking of recycled water piping.

3. **Annual Report.** The Discharger shall submit an annual report to the Regional Water Board for each calendar year. The report shall be submitted by March 1st of the following year. The report shall, at a minimum, include the following:

   a. **Monitoring Data Summaries.** Both tabular and, where appropriate, graphical summaries of the monitoring data and disposal records from the previous year. If the Discharger monitors any pollutant more frequently than required by this Order, using test procedures approved under 40 CFR Part 136 or as specified in this Order, the results of this monitoring shall be included in the calculation and report of the data submitted SMR.

   b. **Compliance Reporting.** A comprehensive discussion of the facility's compliance (or lack thereof) with all effluent limitations and other WDRs, and the corrective actions taken or planned, which may be needed to bring the discharge into full compliance with the Order.

   c. **Sanitary Sewer System Reporting.** The Discharger shall submit, as part of its annual report to the Regional Water Board, a description of the Discharger's activities within the sanitary sewer system over the previous calendar year. The report shall contain:

      i. A description of any change in the local legal authorities enacted to implement the Sewer System Management Plan (SSMP);

      ii. A summary of the SSOs that occurred in the past year. The summary shall include the date, location of overflow point, affected receiving water (if any), estimated volume, and cause of the SSO, and the names and addresses of the responsible parties as well as the names and addresses of the property owner(s) affected by the sanitary sewer overflow.

      iii. A summary of compliance and enforcement activities during the past year. The summary shall include fines, other penalties, or corrective actions taken as a result of the SSO. The summary shall also include a description of public participation activities to involve and inform the public;

iv. Documentation that all feasible steps to stop and mitigate impacts of sanitary sewer overflows have been taken.

d. Source Control Activity Reporting. The Discharger shall submit, as part of its annual report to the Regional Water Board, a description of the Discharger's source control activities, during the past year. This annual report is due on March 1st of each year.

i. A copy of the source control standards.

ii. A description of the waste hauler permit system.

iii. A summary of the compliance and enforcement activities during the past year. The summary shall include the names and addresses of any industrial or commercial users under surveillance by the Discharger, an explanation of whether they were inspected, sampled, or both, the frequency of these activities at each user, and the conclusions or results from the inspection or sampling of each user.

iv. A summary of any waste survey results.

v. A summary of public participation activities to involve and inform the public.

e. Biosolids Handling and Disposal Activity Reporting. The Discharger shall submit, as part of its annual report to the Regional Water Board, a description of the Discharger's solids handling, disposal and reuse activities over the previous calendar year. At a minimum, the report shall contain:

i. Annual sludge production, in dry tons and percent solids

ii. A schematic diagram showing sludge handling facilities (e.g., digesters, thickeners, drying beds, etc.), if any and a solids flow diagram.

iii. Methods of final disposal of sludge:

(a) For any portion of sludge discharged to a sanitary landfill, the Discharger shall provided the volume of sludge transported to the land fill or other appropriately permitted facility, the names and locations of the facilities receiving sludge, the Regional Water Board's WDRs order number for the regulated facility, and the landfill classification.

(b) For any portion of sludge discharged through land application, the Discharger shall provide the volume of biosolids applied, the date and locations where biosolids were applied, the Regional Water Board's WDRs order number for the regulated discharge, a demonstration that the discharge was conducted in compliance with applicable permits and

regulations, and, if applicable, corrective actions taken or planned to bring the discharge into compliance with WDRs.

(c) For any portion of sludge further treated through composting, the Discharger shall provide a summary of the composting process, the volume of sludge composted, and a demonstration and signed certification statement that the composting process and final product met all requirements for Class A biosolids.

f. Storm Water Reporting. The Discharger shall submit, as part of its annual report to the Regional Water Board, an evaluation of the effectiveness of the Discharger's Best Management Practices (BMPs) to control the storm water associated with the treatment facility site, as well as activities to maintain and upgrade these BMPs.

g. Septage Monitoring and Reporting. The results of septage monitoring shall be provided as follows:

i. A narrative description of all preparatory, monitoring, sampling, and analytical testing activities for the septage monitoring program. The narrative shall be sufficiently detailed to verify compliance with waste discharge requirements and this monitoring and reporting program.

ii. A summary table of all discharges of septage to the WWTF. At a minimum, the table shall include; the name, County ID number, and District ID number of each hauler discharging into the WWTF system over the past calendar year.

iii. A summary table of analytical results for all samples of septage collected in compliance with waste discharge requirements and this monitoring and reporting program. When directed by the Regional Water Board, the Discharger shall also append analytical reports, chains of custody, and other documentation necessary to confirm the validity of the monitoring samples.

E. Spills and Overflows Notification

1. All spills, unauthorized discharges, and sanitary sewer overflows (SSOs) equal to or in excess of 1,000 gallons or any size spill or SSO that results in a discharge to a drainage channel or a surface water:

a. As soon as possible, **but not later than two (2) hours** after becoming aware of the discharge, the Discharger shall notify the State Office of Emergency Services (OES), the local health officer or directors of environmental health with

jurisdiction over affected water bodies or land areas, and the Regional Water Board.[17]

Information to be provided verbally to the Regional Water Board includes:

i. Name and contact information of caller;
ii. Date, time and location of spill occurrence;
iii. Estimates of spill volume, rate of flow, and spill duration;
iv. Surface water bodies impacted, if any;
v. Cause of spill;
vi. Cleanup actions taken or repairs made; and
vii. Responding agencies.

b. As soon as possible, but **not later than twenty-four (24) hours** after becoming aware of a discharge, the Discharger shall submit to the Regional Water Board a certification that the State Office of Emergency Services and the local health officer or directors of environmental health with jurisdiction over affected water bodies or land areas have been notified of the discharge. For the purpose of this requirement, "certification" means an OES certification number and, for the local health department, name of local health staff, department name, phone number and date and time contacted.

c. **Within five (5) business days**, the Discharger shall submit a written report to the Regional Water Board office. The report must include all available details related to the cause of the spill and corrective action taken or planned to be taken, as well as copies of reports submitted to other agencies.

i. Information provided in the verbal notification;
ii. Other agencies notified by telephone;
iii. Detailed description of cleanup actions and repairs taken; and
iv. Description of actions that will be taken to minimize or prevent future spills.

d. In the cover letter of the SMR, the Discharger shall include a brief written summary of the event and any additional details related to the cause or resolution of the event, including, but not limited to results of any water quality monitoring conducted.

2. All spills, unauthorized discharges, and sanitary sewer overflows (SSOs) less than 1,000 gallons that do not reach a drainage channel or a surface water:

---

[17] The contact number for spill reporting for the Office of Emergency Services is (800) 852-7550. The contact number of the Regional Water Board during normal business hours is (707) 576-2220. After normal business hours, spill reporting to OES will satisfy the 2 hour notification requirement for the Regional Water Board.

a. As soon as possible, but **not later than twenty-four (24) hours** after becoming aware of the discharge, the Discharger shall notify the Regional Water Board and provide the applicable information in requirement 1.a of this section.

b. In the cover letter of the SMR, the Discharger shall include a written description of the spill event.

ATTACHMENT F – FACT SHEET

Table of Contents

I. Permit Information F-3
II. Facility Description F-4
A. Description of Wastewater and Biosolids Treatment or Controls F-4
B. Discharge Points and Receiving Waters F-10
C. Summary of Existing Requirements and Self-Monitoring Report (SMR) Data F-11
D. Compliance Summary F-12
E. Planned Changes F-13
III. Applicable Plans, Policies, and Regulations F-14
A. Legal Authorities F-14
B. California Environmental Quality Act (CEQA) F-14
C. State and Federal Regulations, Policies, and Plans F-15
D. Impaired Water Bodies on CWA 303(d) List F-18
E. Other Plans, Polices and Regulations F-19
IV. Rationale For Effluent Limitations and Discharge Specifications F-20
A. Discharge Prohibitions F-20
B. Technology-Based Effluent Limitations F-23
1. Scope and Authority F-23
2. Applicable Technology-Based Effluent Limitations F-25
C. Water Quality-Based Effluent Limitations (WQBELs) F-28
1. Scope and Authority F-28
2. Applicable Beneficial Uses and Water Quality Criteria and Objectives F-32
3. Determining the Need for WQBELs F-33
4. WQBEL Calculations F-39
5. Whole Effluent Toxicity (WET) F-41
D. Final Effluent Limitations F-41
1. Satisfaction of Anti-Backsliding Requirements F-41
2. Satisfaction of Antidegradation Policy F-42
3. Stringency of Requirements for Individual Pollutants F-43
4. Summary of Final Effluent Limitations F-44
E. Interim Effluent Limitations F-48
F. Land Discharge Specifications F-48
G. Reclamation Specifications F-48
1. Scope and Authority F-48
2. Applicable Beneficial Uses and Water Quality Criteria and Objectives F-49
3. Satisfaction of Antidegradation Policy F-50
4. Summary of Final Effluent Limitations for the New WWTF F-51
– Discharge Point 004 ..... F-51
H. Other Requirements F-51
V. Rationale for Receiving Water Limitations F-52
A. Surface Water F-52

B. Groundwater F-52
VI. Rationale for Monitoring and Reporting Requirements F-52
A. Influent Monitoring F-52
B. Effluent Monitoring F-53
C. Whole Effluent Toxicity Testing Requirements F-55
D. Receiving Water Monitoring F-57
1. Surface Water F-57
2. Groundwater F-58
E. Other Monitoring Requirements F-58
VII. Rationale for Provisions F-59
A. Standard Provisions F-59
B. Regional Water Board Standard Provisions F-59
C. Special Provisions F-60
1. Reopener Provisions F-60
2. Special Studies and Additional Monitoring Requirements F-61
3. Best Management Practices and Pollution Prevention F-62
4. Construction, Operation, and Maintenance Specifications F-62
5. Special Provisions for Municipal Facilities (POTWs Only) F-63
6. Other Special Provisions F-65
VIII. Public Participation F-65
A. Notification of Interested Parties F-65
B. Written Comments F-66
C. Public Hearing F-66
D. Waste Discharge Requirements Petitions F-66
E. Information and Copying F-67
F. Register of Interested Persons F-67
G. Additional Information F-67

List of Tables

Table F-1. Facility Information F-3
Table F-2. Historic Effluent Limitations and Monitoring Data F-11
Table F-3. Basin Plan Beneficial Uses F-15
Table F-4. Summary of Technology-based Effluent Limitations – Existing WWTF F-26
Table F-5. Summary of Technology-based Effluent Limitations – New WWTF F-27
Table F-6. Applicable Water Quality Criteria F-33
Table F-7. Summary of RPA Results F-38
Table F-8. Determination of Long Term Average F-40
Table F-9. Final WQBELs for Priority Pollutants Based on Aquatic Life Criteria F-40
Table F-10. Final WQBELs for Priority Pollutants Based on Human Health Criteria F-40
Table F-11. Summary of Final Effluent Limitations Existing WWTF – Discharge Point 001 . F-44
Table F-12. Summary of Final Effluent Limitations New WWTF – Discharge Point 002 ..... F-45
Table F-13. Summary of Final Effluent Limitations New WWTF – Discharge Point 003 ..... F-46

ATTACHMENT F – FACT SHEET

As described in section II of this Order, this Fact Sheet includes the legal requirements and technical rationale that serve as the basis for the requirements of this Order.

This Order has been prepared under a standardized format to accommodate a broad range of discharge requirements for dischargers in California. Only those sections or subsections of this Order that are specifically identified as "not applicable" have been determined not to apply to this Discharger. Sections or subsections of this Order not specifically identified as "not applicable" are fully applicable to this Discharger.

I. PERMIT INFORMATION

The following table summarizes administrative information related to the facility.

Table F-1. Facility Information

WDID	1B80078OMEN
Discharger	City of Willits
Name of Facility	City of Willits Wastewater Treatment Facility
Facility Address	300 N. Lenore Street Willits, CA 95490 Mendocino County
Facility Contact, Title and Phone	JC England, Chief Plant Operator, (707) 459-5028
Authorized Person to Sign and Submit Reports	Paul Cayler, City Manager, (707) 459-4601
Mailing Address	111 E. Commercial Street, Willits, CA 95490
Billing Address	Same as Mailing Address
Type of Facility	Publicly Owned Treatment Works (POTW)
Major or Minor Facility	Major
Threat to Water Quality	1
Complexity	A
Pretreatment Program	No
Reclamation Requirements	No
Existing Facility Design Flow	1.3 million gallons per day (mgd) Average Dry Weather Flow Treatment Capacity (ADWF) 3.0 mgd Peak Wet Weather Flow Treatment Capacity (PWWF)
Existing Facility Permitted Flow	1.3 mgd ADWF 3.0 mgd PWWF
New Facility Design Flow	7.0 mgd Monthly Average Flow
New Facility Permitted Flow	4.0 mgd Monthly Average Flow
Watershed	Upper Eel River
Receiving Water	Outlet Creek
Receiving Water Type	Inland surface water

A. The City of Willits (hereinafter Discharger) is the owner and operator of the City of Willits Wastewater Treatment Facility (hereinafter Facility), a publically owned treatment works (POTW).

For the purposes of this Order, references to the "discharger" or "permittee" in applicable federal and state laws, regulations, plans, or policy are held to be equivalent to references to the Discharger herein.

B. The Facility discharges wastewater to Outlet Creek, a water of the United States, and is currently regulated by Order No. R1-2001-71 which was adopted on June 28, 2001 and expired on June 28, 2006. The terms and conditions of the current Order have been automatically continued and remain in effect until new Waste Discharge Requirements (WDRs) and National Pollutant Discharge Elimination System (NPDES) permit requirements are adopted pursuant to this Order.

C. The Discharger filed a report of waste discharge and submitted an application for renewal of its WDRs and NPDES permit on March 30, 2006. The application was revised to reflect requirements for the proposed WWTF design and configuration. The Discharger submitted a revised application on December 7, 2009. Application modifications and clarifications were received on January 26, 2010, February 17, 2010 and March 11, 2010. A site visit was conducted on October 7, 2009 to observe operations and collect additional data to develop permit limitations and conditions.

II. FACILITY DESCRIPTION

The Discharger owns and operates a municipal wastewater treatment facility (WWTF) and associated wastewater collection, reclamation, and disposal facilities that serve a population of 9,500 residential and commercial users. The WWTF receives septage from local area haulers. The septage receiving station precedes the WWTF headworks.

A. Description of Wastewater and Biosolids Treatment or Controls

The Facility is located northeast of Willits, California adjacent to Broaddus Creek and Baechtel Creek and serves the City of Willits, the Brooktrails Community Services District and the Meadowbrook Manor Sanitation District. From October 1 through May 14, treated wastewater is currently discharged from Discharge Point 001 to Outlet Creek, just downstream of the confluence of Broaddus Creek and Baechtel Creek. From May 15 through September 30, treated wastewater is reclaimed via irrigation on adjacent pasture lands. Outlet Creek is tributary to the Eel River within the Outlet Creek Hydrologic Subarea of the Upper Main Eel River Hydrologic Area.

1. Existing Wastewater Treatment Facility

The existing WWTF consists of an extended aeration activated sludge process followed by clarification and chlorine disinfection. The average dry weather design flow capacity

of the existing WWTF is 1.3 mgd and the peak wet weather design flow capacity is 3.0 mgd.

Primary treatment is provided in a recently constructed two-story headworks building and influent pump station. Influent to the WWTF is directed to the influent pump station wet well chamber below the first level of the headworks building. Influent to the wet well chamber is measured by a Parshall flume at a manhole located west of the headworks building just prior to entering the wet well chamber. The wet well chamber has four pumps and removes flotables with a pre-rotation process. The two larger pumps (38.9 horsepower (HP) each) can pump up to 2,430 gallons per minute (gpm). The two smaller pumps (25.4 HP each) can pump up to 1,215 gpm. Wastewater in the wet well is pumped through two screw conveyed inclined screens to the second-story. Solids removed by the inclined screens are conveyed by chutes and bagged for disposal by Solids Waste Services. Wastewater from the inclined screens is directed to a grit removal and classification chamber. The grit classifier is supplied by two alternating 15 HP pumps rated at 300 gpm. Solids from the grit removal process are collected in a bin on the first level. The headworks treatment processes are sized to handle a future peak influent flow capacity of 10 mgd.

Primary treated wastewater exceeding the secondary treatment capacity is diverted by a secondary influent splitter box to the first of five storm equalization ponds located on the south end of the Facility property. The equalization ponds have a total capacity of approximately 16 million gallons. Pond No. 1 is lined with concrete, while the remaining ponds are lined with impermeable clay liners.

During periods of wet weather, influent flows that exceed the capacity of the Facility are directed into Pond No. 1. When Pond No. 1 has reached capacity, excess wastewater flows over a weir into Pond No. 2, leaving behind any settleable solids as it skims the wastewater off the top. When Pond No. 2 reaches capacity, wastewater flows into Pond No. 3 via a pipe set at the bottom of the pond, which removes floatables as they remain at the top. Wastewater is piped from Pond No. 3 to Pond Nos. 4 and 5 as required by wet weather flows. Flow between each of the ponds is controlled by gravity. When influent flows to the WWTF drop below the treatment capacity, wastewater from Pond No. 1 can be directed back to the headworks through a pipe in the northeast corner of the pond. A one-way flow restrictor between Pond Nos. 1 and 2 opens as the flow reverses and allows water from the ponds to be redirected from the ponds to the headworks.

After primary treatment, wastewater is directed from the headworks to two extended aeration basins with a combined volume of 0.8 million gallons. The aeration basins are designed for two 20 HP, low-speed, turbine-type floating aerators. The existing aerators have reached the end of their 20-year design lives. The aeration basins are constructed with earthen berms and are lined with impermeable clay liners. The berms are armored with rock-filled gabions above the water level.

From the aeration basins, wastewater is directed to a 50-foot diameter, concrete, center-feed, peripheral clarifier. A center drive sludge collector and sludge collector tubes discharge into a hopper in the bottom of the clarifier where the sludge flows by gravity to the return activated sludge (RAS) pump suction header or to an aerobic digester. Two variable speed drive pumps, with a maximum rate of return of 0.8 mgd each, convey RAS from the clarifier to the aeration basins. One centrifugal, self-priming pump is used to convey waste activated sludge (WAS) from the sludge collection hopper at the center of the clarifier to the aerobic digester. The existing clarifier drive mechanisms are past their design life.

Disinfection occurs in the chlorine contact chamber, which is designed to provide disinfection at plug flow hydraulic conditions and has a contact time of 20 minutes at a flow rate of 2.4 mgd. However, operational staff typically limits flow through the treatment system to 1.8 mgd, which results in a 30-minute contact time.

From October 1 through May 14, under sufficient stream flow conditions, treated wastewater is discharged at Discharge Point 001 to Outlet Creek, just downstream of the confluence of Broaddus Creek and Baechtel Creek. The discharge to Outlet Creek flows by gravity through a 24-inch pipe outfall structure located just downstream of a concrete trapezoid weir located across the creek channel. The outfall pipe discharges at the edge of the creek just above the water surface. The effluent does not mix well with the receiving water at the outfall location and can be observed to follow the western bank of the creek as a discrete plume for some distance below the outfall.

During the winter months when stream flows are insufficient and from May 15 through September 30, treated wastewater is used for spray irrigation on up to 200 acres of pasture located near the WWTF.

2. Existing Biosolids Management

Digested sludge is pumped with 15 HP pumps from the aerobic digester to dewatering and drying stations. Dewatering and drying processes work simultaneously. The drying station consists of three 50 square foot under-drained sand drying beds, which are used weather-permitting. The beds are filled to a depth of 1 foot where water either evaporates or percolates through the sand. Collected filtrate is returned to the plant influent structure for treatment. Dried sludge is composted on site.

A new 36 inch rotary fan press supplements the dewatering and drying process and mechanically separates liquids and solids, producing dewatered biosolids at 15 to 18 percent. The rotary fan press is capable of dewatering at a maximum rate of 70 gpm. The effluent from the rotary fan press is pumped into a 30 cubic yard dump trailer and the remaining solids are transferred to the composting area.

Composting is achieved through a three-step process including mixing, composting and curing, and storage. Dewatered biosolids are mixed with wood chips or sawdust at a 1:1 ratio by a front-end loader on a paved area next to the receiving bin. After approximately

1 month of residence time, the mixture is moved to a compost pile where it continues to dry and composting begins. The compost pile is turned each month and is allowed to compost for 6 to 12 months. The compost mixture is then moved to a storage pile and allowed to cure for at least a year. The finished compost is then land applied on an 18 acre agricultural parcel owned by the Discharger and located immediately west of the Facility. Compost is applied to approximately one-third of the parcel (6 acres) each year. The section receiving compost is fenced to prohibit access by grazing livestock during the early portion of the growing season.

3. New Wastewater Treatment Facility

The Discharger is planning to upgrade the WWTF during the term of this Order in order to comply with the regulatory requirements. The proposed WWTF will include primary treatment at the existing new headworks building, as described above, an enhanced extended aeration activated sludge mechanical secondary treatment process with nutrient removal, ultraviolet (UV) disinfection, followed by enhanced effluent treatment and storage within new treatment wetland. The proposed WWTF will be sized and constructed to provide current required treatment capacity and accommodate anticipated growth through 2025. Although treatment components of the proposed WWTF have been designed to accommodate higher flows, the Discharger has only requested a permitted discharge of an average monthly flow up to 4.0 mgd.

The new WWTF will replace the existing aeration basins with a new extended aeration system, providing efficient biochemical oxygen demand (BOD) and nutrient removal. A long solids retention time in the extended aeration system will provide process stability and, due to the large quantity of biological solids present, wide swings in organic and hydraulic loads can be handled without adjustments to the process or equipment. The extended aeration system will also produce well digested and stabilized biomass. The extended aeration system will be designed for a peak hydraulic capacity of 7.0 mgd.

Each basin will contain eight diffuser chains. The air to each diffuser chain will be individually controlled by a motorized valve which will operate on a timed cycle during denitrification mode. When diffuser chains are turned off, anoxic zones are created to promote denitrification. Of the eight diffuser chains in each basin, six will operate as part of the timed cycle with three chains on and three off.

The two new basins will be 134 feet wide at grade and 150 feet in length, measured at the top of the berm, providing a combined volume of 2,437 million gallons. The basins will be lined with a polypropylene reinforced geomembrane with a minimum thickness of 60 millimeters (mm). The proposed northern basin (Aeration Basin No. 1) will be in the shadow of the existing WWTF, minimizing interference with existing floodway. However, some floodway mitigation will be required, including re-grading the eastern section of the existing drying beds and composting area. Composting and dewatering will be relocated to the north end of the existing WWTF, west of the proposed Aeration Basin No. 1. This

will provide improved access to the sludge handling area and puts the operation in close proximity to the field where the compost is currently land applied.

The new WWTF upgrades include replacing the existing clarifier with two new circular clarifiers which will be located west of the new aeration basins. Each clarifier will be 70 feet diameter by 14 feet deep tanks constructed of concrete. The combined capacity of the two clarifiers will be 7.0 mgd. At a peak flow of 7.0 mgd, the overflow rate of the clarifiers will be 1,099 gpd/SF. The Discharger plans to replace the two variable speed drive RAS pumps with three screw centrifugal pumps with a capacity of 1,250 gpm each, with a maximum return rate of 3.6 mgd. Two pumps will be operated at all times while one will be reserved for backup. The RAS pumps will be located adjacent to the clarifiers. The Discharger also plans to install small, certified constant speed pumps in the blower building for WAS.

Upgrades will include a UV disinfection system which will be installed in the existing chlorine contact basin. The UV disinfection system will be designed to achieve a median total coliform organism concentration of less than 23 most probable number per 100 milliliters (MPN/100 mL) and a daily maximum concentration of 230 MPN/100 mL. The delivered dose is a function of the clarity of the water or the UV transmissivity (UVT). The proposed design of the system conservatively assumes transmissivity of 55 percent. If the effluent is shown to have higher transmissivity, then the required system size will be reduced. The UV disinfection system will be sized to handle capacities as low as 0.35 mgd and as great as 7.0 mgd.

Following disinfection processes, effluent will ultimately be discharged into an enhancement wetland for further treatment. The enhancement wetland will be constructed on a 40-acre parcel owned by the Discharger located immediately east of the existing WWTF on the east side of Outlet Creek. The treatment wetland will consist of approximately 30 acres of free water surface, with the remaining acreage set aside for potential wetland and floodplain mitigation and an Outlet Creek setback zone. The wetland will consist of three cells; each planted with a variety of wetland species and operated at a normal operating depth of 1 to 2 feet. The wetland will be lined with the clay soils existing onsite. The exterior berms surrounding the cells will be approximately 8 to 10 feet tall and the interior berms will be 6 feet tall. The Discharger plans for approximately 3 feet of active storage above the normal operating depth providing approximately 90 ac-ft of active storage and buffering prior to discharging to Outlet Creek. An additional 90 acre-feet (ac-ft) of storage (3 foot depth) is proposed above the active storage volume for use during critical discharge periods to help reduce potential discharge violations, provide capacity for future growth, and provide another layer of redundancy and reliability. Each cell in enhancement wetland will be stepped down approximately 2 feet from south to north. Flow between the cells will be controlled by a series of weir structures.

A period of two to three growing seasons will be necessary to allow the new enhancement wetland vegetation to fully establish prior to operation. Flooding of

treatment wetlands prior to plant establishment can cause significant loss of wetland vegetation, leading to short circuiting of the system and ultimately poor performance. The enhancement wetlands are a critical part of the treatment system and need to be fully functional to achieve the desired water quality results. This Order requires the enhancement wetlands be ready for operation no later than October 1, 2012. The Discharger anticipates that the mechanical portion of the new WWTF will be operational prior to the October 1, 2012 date. During the interim period, the new mechanical WWTF will continue to discharge at Discharge Location 001 and other than nitrogen criterion, compliance with effluent limitations applicable to Discharge Point 003 will be assessed along with requirements for Discharge Point 002 at Monitoring Location EFF-002.

Beginning October 1, 2012, from October 1 through May 14 each year, treated wastewater from the enhancement wetland will be discharged to Outlet Creek at Discharge Point 003, which will be located at the north end of the wetland approximately 2,700 feet downstream of Discharge Point 001. The discharge from the wetland will pass through a submerged slide gate with a motor actuated operator to a 30-inch outfall pipe. The outfall pipe will incorporate flow metering to provide control of the outfall discharge proportional to the measured flow in Outlet Creek. The outfall pipe will consist of approximately 600 feet of 30-inch pipe, a metering vault, and a concrete outfall structure located at the creek. Utilizing the full capacity of the enhancement wetland, the proposed WWTF will be able to maintain the 10 percent discharge rate 99.5 percent of the time at an average monthly design capacity of 10.0 mgd.

From May 15 through September 30 and any other time seasonally appropriate, treated wastewater will continue to be recycled as spray irrigation. The Discharger plans to replace the existing irrigation pump station, vertical turbine pumps, and power service components with a newly constructed irrigation pump station and outlet structure. The new pumps will be vertical turbine pumps with a similar capacity as the existing pumps and will be located in a rectangular reinforced concrete wet well. The wet well will be connected to the last well of the treatment wetland though a weir designed to maintain a minimum depth of 1.5 feet in the wetland to ensure optimum aquatic plant survival conditions. The pumps will be able to be operated manually and automatically.

4. Future Biosolids Management

The Discharger plans to continue with its current three-step composting operation, as described above. However, as part of the WWTF upgrade, an open and paved composting area will be provided for processing of dewatered biosolids and the Discharger will cover a portion of the existing composting area to facilitate wet weather mixing of wood chips and biosolids.

Currently, septage is received at the Facility from septage haulers who discharge septage to equalization Pond No. 1, where it is directed to the headworks. Over the term of this Order, the Discharger plans to install a septic hauling station to alleviate processing demands on the treatment process. The septage station would include an

alternate headworks which would be accessed by haulers through a card key system. The septage would filter through the screening and grit removal process and go to a batch tank where random or targeted samples could be taken. The septage would then be treated in a polymer injection station, dewatered, and incorporated into the general composting area. Water extracted from the septage would be directed into the WWTF headworks for treatment.

B. Discharge Points and Receiving Waters

During the discharge season, wastewater is currently discharged to Outlet Creek at Discharge Point 001 (39° 25’ 14” N latitude and 123° 20’ 24” W longitude), just downstream of the confluence of Baechtel Creek and Broaddus Creek, within the Outlet Creek Hydrologic Subarea of the Upper Main Eel River Hydrologic Area. The *Water Quality Control Plan for the North Coast Region* (hereinafter Basin Plan) limits discharges to the Eel River and its tributaries to 1 percent of the receiving water flow (1:100) unless an exception to the requirement is granted by the Regional Water Quality Control Board (Regional Water Board). (See section IV.C of this Fact Sheet.) Exceptions are given for cause on a case-by-case basis, taking into consideration:

1. The reliability of the WWTF;

2. Whether the discharge of waste is limited to rates and constituent levels that protect the beneficial uses of the receiving waters;

3. Whether reasonable alternatives for reclamation have been addressed to limit the amount of the wastewater to be discharged;

4. Whether the exception complies with State and federal antidegradation policies; and

5. Whether there is any discharge of waste to surface waters during the period of May 15 through September 30.

In order to consistently achieve effluent of sufficient quality to protect beneficial uses and become eligible for an exception to the Basin Plan discharge rate requirements, the Discharger plans construction of the new WWTF described in section II.A above. The new WWTF will discharge from the treatment wetland into Outlet Creek at Discharge Point 003 approximately 2,700 feet downstream of the existing point of discharge. As discussed in detail in section IV.C, of this Fact Sheet, improved treatment capabilities for conventional and biostimulatory pollutants in the new WWTF are projected to meet water quality criteria for the protection of surface water beneficial uses at a discharge rate up to 1:10 (10% of receiving water flow).

C. Summary of Existing Requirements and Self-Monitoring Report (SMR) Data

Effluent limitations contained in Order No. R1-2001-71 for discharges from Discharge Point 001 (Monitoring Location EFF-001) and documented violations from the term of Order No. R1-2001-71 are as follows:

Table F-2. Historic Effluent Limitations and Monitoring Data

Parameter	Units	Effluent Limitations			Monitoring Data (From July 2001 to June 2008)	
		Average Monthly[1]	Average Weekly[2]	Maximum Daily[3]	Reported Value of Highest Violation	Number of Violations
Biochemical Oxygen Demand (5-day @ 20°C)	mg/L	30	45	60	--	No Violations
	lbs/day[4]	325	488	650	--	No Violations
	% Removal	85	--	--	63[5]	11
Total Suspended Solids	mg/L	30	45	60	--	No Violations
	lbs/day[4]	325	488	650	--	No Violations
	% Removal	85	--	--	79[5]	2
Settleable Solids	ml/L	0.1	--	0.2	--	No Violations
Total Coliform Organisms	MPN/100 mL	23[6]	--	230	--	No Violations
pH	standard units	--	--	6.5 – 8.5	6.3[7]	2
Chlorine, Total Residual	mg/L	1.5[8]	--	0.1[9]	--	No Violations
Mean Daily Dry Weather Flow	mgd	1.3	--	--	--	No Violations
Acute Toxicity	% Survival	--	--	[10]	--	No Violations

---

1 The arithmetic mean of all samples collected in a calendar month.
2 The arithmetic mean of all samples collected in a calendar week, Sunday to Saturday.
3 The maximum result of all samples collected in a calendar day.
4 The mass discharge (lbs/day) is obtained from the following calculation of any calendar day:

$$\frac{8.34}{N}\sum^{N} Q_i C_i$$

in which N is the number of samples analyzed in any calendar day. Q_i and C_i are the flow rate (mgd) and the constituent concentration (mg/L), respectively, that are associated with each of the N grab samples, that may be taken in any calendar day. If a composite sample is taken, C_i is the concentration measured in the composite sample; and Q_i is the average flow rate occurring during the period over which samples are composited.
5 Value represents the lowest reported monthly average percent removal resulting in an effluent limitation violation.
6 Median.
7 Value represents the lowest reported pH resulting in an effluent limitation violation.
8 A minimum total chlorine residual of 1.5 mg/L shall be maintained at the end of the disinfection process.
9 Waste discharged to the Eel River or its tributaries shall have no detectable levels of chlorine using a minimum detection limit of 0.1 mg/L.
10 There shall be no acute toxicity in the effluent. Effluent is considered acutely toxic when there is: 1) less than 90 percent survival 70 percent of the time based on any monthly median, or 2) less than 70 percent survival 100 percent of the time.

D. Compliance Summary

In accordance with the Basin Plan, Order No. R1-2001-71 prohibited the discharge of treated effluent to the Eel River and its tributaries to less than 1 percent of the receiving water flow during the allowable discharge season, from October 1 to May 14 each year. Because discharges of treated effluent from the Facility frequently exceed 1 percent of the receiving water flow, the Regional Water Board adopted Cease and Desist Order (CDO) No. R1-2001-71 on June 28, 2001, which contained a time schedule for developing a long-term wastewater management strategy that would address the discharge violations at the Facility and provide compliance with the Basin Plan requirement by June 1, 2006. In accordance with the tasks outlined in CDO No. R1-2001-71, the Discharger submitted a certified Environmental Impact Report in 2003 that outlined two feasible alternatives that would meet long-term wastewater treatment and disposal needs. The Discharger identified the preferred alternative for the project, which included construction of oxidation ponds and a series of constructed treatment wetlands, and requested additional time to complete design and construction of the preferred alternative. On November 29, 2004, the Regional Water Board adopted CDO No. R1-2004-0095, which established a new time schedule to complete key phases of design and construction for the preferred alternative. Preliminary design documents outlining the preferred alternative were completed and submitted in accordance to the requirements of CDO No. R1-2004-0095.

During initial permitting activities for the preferred alternative, responses received from the various regulatory agencies indicated that the preferred alternative, as identified in the environmental documents, would not be permittable as the least environmentally damaging practicable alternative (LEDPA) for the project, due to the large extent of wetland impacts that would be associated with the preferred project. In response to the agency review comments, the Discharger opted to revise the proposed project to reduce the potential wetland impacts associated with the project, and selected the second alternative, an upgraded mechanical plant with an enhancement/treatment wetland, as the new preferred alternative.

To allow the Discharger additional time to reassess design and construction of the revised preferred alternative, the Regional Water Board adopted CDO No. R1-2006-0108 on November 29, 2006. CDO No. R1-2006-0108 established a time schedule for achieving compliance with the Basin Plan requirement, including submittal of a variance request to address the ratio of surface water to discharge rates and associated sizing requirements for the proposed treatment wetland.

In addition to being subject to the CDOs described above, the Regional Water Board adopted Administrative Civil Liability Order (ACLO) No. R1-2007-0093 on December 6, 2007. The ACLO assessed mandatory minimum penalties for violations of effluent limitations during the period from January 1, 2000 through May 31, 2006. To satisfy the assessed penalties of $21,000, the Discharger paid a sum of $6,000 and agreed to complete a Compliance Project (CP) in lieu of paying the remaining $15,000.

On June 27, 2008, the Regional Water Board issued Order No. R1-2008-0087, Notice of Violation and Conditional Offer to Participate in Expedited Payment Program Relating to Violations of NPDES Permit, to the Discharger. Order No. R1-2008-0087 alleged two violations of effluent limitations and provided the Discharger with a Conditional Offer to resolve these violations. After discussions with staff, the Discharger agreed to have the violations identified under Order No. R1-2008-0087 deferred and incorporated into a future formalized enforcement action.

E. Planned Changes

The Discharger intends to construct a new WWTF (as described under section II.A above) to replace the existing WWTF in accordance with CDO No. R1-2006-0108. This Order will serve to transition from the existing WWTF to the new WWTF and therefore contains effluent limitations specific to each. The new WWTF is expected to improve compliance by providing enhanced secondary treated effluent using a combination of extended aeration activated sludge secondary treatment processes with nutrient removal, UV disinfection, and enhanced treatment and storage within new enhancement wetlands. The existing storm bypass/overflow ponds will continue to provide 16 million gallons of equalization capacity for peak flows entering the WWTF.

In March 2007, the Discharger submitted a request for a variance to Basin Plan discharge rate requirements. The variance request addressed requirements contained in the Implementation Plan section of the Basin Plan (specifically at page 4-2.00). The variance request identified each constituent of concern (COC) known or reasonably thought to be present in the effluent; documented existing water quality for each COC in the receiving water upstream of the influence of the discharge; and compared the water quality objectives necessary to support the most sensitive beneficial uses identified for the receiving water in the Basin Plan against the levels of each COC and their cumulative impacts.

Considering the potential effluent quality and flows that can be achieved with the new WWTF, the models submitted to support the variance request predicted that discharges of enhanced secondary-treated effluent from the new WWTF will result in dissolved oxygen levels in the downstream receiving water above the Basin Plan minimum of 7.0 mg/L. Further the variance request concluded that the proposed WWTF will removal a large percentage of both total nitrogen and total phosphorus loads into Outlet Creek and that the new WWTF will not raise benthic biomass (phytoplankton chlorophyll-a) levels above those for the existing 1:100 permitted condition. Based upon the evaluation of the information submitted in support of the variance request, the Regional Water Board finds that the discharge of effluent from the new WWTF at 10 percent of the receiving water flow (1:10) will be protective of the beneficial uses of the receiving water and consistent with Basin Plan requirements.

III. APPLICABLE PLANS, POLICIES, AND REGULATIONS

The requirements contained in the proposed Order are based on the requirements and authorities described in this section. This section provides supplemental information, where appropriate, for the plans, policies, and regulations relevant to the discharge.

A. Legal Authorities

This Order is issued pursuant to section 402 of the federal Clean Water Act (CWA) and implementing regulations adopted by the U.S. Environmental Protection Agency (USEPA) and chapter 5.5, division 7 of the California Water Code (commencing with section 13370). It shall serve as a NPDES permit for point source discharges from this facility to surface waters. This Order also serves as Waste Discharge Requirements (WDRs) pursuant to article 4, chapter 4, division 7 of the Water Code (commencing with section 13260).

B. California Environmental Quality Act (CEQA)

Under Water Code section 13389, this action to adopt an NPDES permit is exempt from the provisions of CEQA, Public Resources Code sections 21100 through 21177.

This action also involves the adoption of WDRs for irrigation using treated effluent. For the portion of the permit that addresses WDRs for discharges to land, the Discharger certified an Environmental Impact Report (State Clearing House #2001032016) stating that the land disposal/reclamation areas of the project would comply with regulatory criteria, not have any significant effects or result in cumulative impacts on groundwater quality.

As a responsible agency under CEQA, the Regional Water Board is required to consider the final certified CEQA document(s) and reach its own conclusions on whether and how to approve a permit for the Discharger's reclamation plan. Prior to approving this Order, the Regional Water Board considered the environmental effects of the Discharger's reclamation plan as identified in the certified final EIR. In considering alternatives and mitigation measures, the Regional Water Board only has the responsibility for mitigating or avoiding those direct or indirect environmental effects of those parts of the reclamation plan that are within its jurisdiction to approve. (Public Resources Code, Section 21002.1(d); California Code of Regulations, title 14, section 15096(g) and (h)). The Regional Water Board has required, as a condition of this Order, mitigation measures for those potentially significant impacts over which the Regional Water Board has authority. The Regional Water Board finds that with mitigation, all potentially significant impacts of the City's reclamation plan will be reduced to levels of insignificance, as described below.

Uses of recycled water for irrigation of agricultural operations under the seasonal irrigation option have the potential to create or contribute to incidental offsite runoff and discharge to adjacent drainages. Therefore, discharges of irrigation runoff could reach natural surface waters and potentially cause incidental changes in water quality conditions. The potential for such occurrences of offsite runoff from irrigated areas is considered low because the City must develop a detailed engineering report under the applicable title 22 regulations and

Irrigation Management Plans for each use site that identifies the operational controls and environmental protection measures that will be implemented to protect surface water and groundwater quality. In addition, the projected effluent quality indicates that the anticipated constituent concentrations would be low and the small quantity of incidental runoff events would not be expected to substantially impair receiving waters. This impact would be less than significant.

In order to allow reclamation at sites not addressed in the existing EIR, the Discharger will need to conduct an environmental analysis of any potential impacts, and will act as the lead agency for CEQA. The Discharger must ensure all reclamation activities comply with Attachment H – Water Reclamation Requirements and Provisions, of this Order.

C. State and Federal Regulations, Policies, and Plans

1. **Water Quality Control Plans.** The Regional Water Board adopted a Basin Plan that designates beneficial uses, establishes water quality objectives, and contains implementation programs and policies to achieve those objectives for all waters addressed through the plan.

   The Basin Plan at page 2-1 states that the beneficial uses of any specifically identified water body generally apply to its tributary streams. The Basin Plan does not specifically identify beneficial uses for Outlet Creek, but does identify present and potential uses for the Eel River, in the Outlet Creek Hydrologic Subarea, to which Outlet Creek is tributary. In addition, the Basin Plan implements State Water Resources Control Board (State Water Board) Resolution No. 88-63, which established State policy that all waters, with certain exceptions, should be considered suitable or potentially suitable for municipal or domestic supply. Thus, the beneficial uses applicable to areal groundwater and Outlet Creek are as follows:

Table F-3. Basin Plan Beneficial Uses

	Receiving Water Name Discharge Points	
Beneficial Use (s)	**Outlet Creek EFF-001 EFF-002 EFF-003**	**Groundwater EFF-002 EFF-004**
Municipal and Domestic Water Supply (MUN)	E	E
Agricultural Supply (AGR)	E	E
Industrial Service Supply (IND)	E	E
Industrial Process Supply (PRO)	P	P
Groundwater Recharge (GWR)	E	---
Freshwater Replenishment (FRESH)	---	E
Navigation (NAV)	E	---
Hydropower Generation (POW)	P	---
Water Contact Recreation (REC-1)	E	---
Non-contact Water Recreation (REC-2)	E	---

Table F-3. Basin Plan Beneficial Uses

	Receiving Water Name Discharge Points	
Beneficial Use (s)	**Outlet Creek EFF-001 EFF-002 EFF-003**	**Groundwater EFF-002 EFF-004**
Commercial and Sport Fishing (COMM)	E	---
Warm Freshwater Habitat (WARM)	E	---
Cold Freshwater Habitat (COLD)	E	---
Wildlife Habitat (WILD)	E	---
Preservation of Rare, Threatened or Endangered Species (RARE)	E	---
Migration of Aquatic Organisms (MIGR)	E	---
Spawning, Reproduction, and/or Early Development (SPWN)	E	---
Aquaculture (AQUA)	E	P
Native American Culture (CUL)	E	E

In addition to the beneficial uses set out in the Basin Plan, there are several implementation plans that include actions intended to meet water quality objectives and protect beneficial uses of the North Coast Basin. For the Eel River and its tributaries, no point source waste discharges are allowed during the period of May 15 through September 30 and for all other periods the receiving stream's flow must be at least 100 times greater than the waste flow unless an exception to the requirement is granted by the Regional Water Board.

The Basin Plan also contains a narrative water quality objective for toxicity that states:

All waters shall be maintained free of toxic substances in concentrations that are toxic to, or that produce detrimental physiological responses in human, plant, animal, or aquatic life. Compliance with this objective will be determined by use of indicator organisms, analyses of species diversity, population density, growth anomalies, bioassay of appropriate duration or other appropriate methods as specified by the Regional Water Board.

The survival of aquatic life in surface waters subjected to a waste discharge, or other controllable water quality factors, shall not be less than that for the same water body in areas unaffected by the waste discharge, or when necessary for other control water that is consistent with the requirements for 'experimental water' as described in Standard Methods for the Examination of Water and Wastewater 18th Edition (1992). At a minimum, compliance with this objective as stated in the previous sentence shall be evaluated with a 96-hour bioassay.

In addition, effluent limits based upon acute bioassays of effluent will be prescribed. Where appropriate, additional numerical receiving water objectives for specific toxicants

will be established as sufficient data becomes available, and source control of toxic substances will be required.

Requirements of this Order implement the Basin Plan.

2. **Thermal Plan.** The State Water Board adopted a Water Quality Control Plan for Control of Temperature in the Coastal and Interstate Water and Enclosed Bays and Estuaries of California (Thermal Plan) on May 18, 1972, and amended this plan on September 18, 1975. This plan contains temperature objectives for coastal and interstate waters and enclosed bays and estuaries of the State. Requirements of this Order implement the Thermal Plan to the extent that it is applicable to receiving waters for this Discharger.

3. **National Toxics Rule (NTR) and California Toxics Rule (CTR).** USEPA adopted the NTR on December 22, 1992, and later amended it on May 4, 1995 and November 9, 1999. About forty criteria in the NTR applied in California. On May 18, 2000, USEPA adopted the CTR. The CTR promulgated new toxics criteria for California and, in addition, incorporated the previously adopted NTR criteria that were applicable in the state. The CTR was amended on February 13, 2001. These rules contain water quality criteria for priority pollutants.

4. **State Implementation Policy.** On March 2, 2000, the State Water Board adopted the *Policy for Implementation of Toxics Standards for Inland Surface Waters, Enclosed Bays, and Estuaries of California* (State Implementation Policy or SIP). The SIP became effective on April 28, 2000 with respect to the priority pollutant criteria promulgated for California by the USEPA through the NTR and to the priority pollutant objectives established by the Regional Water Board in the Basin Plan. The SIP became effective on May 18, 2000 with respect to the priority pollutant criteria promulgated by the USEPA through the CTR. The State Water Board adopted amendments to the SIP on February 24, 2005 that became effective on July 13, 2005. The SIP establishes implementation provisions for priority pollutant criteria and objectives and provisions for chronic toxicity control. Requirements of this Order implement the SIP.

5. **Alaska Rule.** On March 30, 2000, USEPA revised its regulation that specifies when new and revised state and tribal water quality standards (WQS) become effective for CWA purposes (40 C.F.R. § 131.21, 65 Fed. Reg. 24641 (April 27, 2000)). Under the revised regulation (also known as the Alaska rule), new and revised standards submitted to USEPA after May 30, 2000, must be approved by USEPA before being used for CWA purposes. The final rule also provides that standards already in effect and submitted to USEPA by May 30, 2000, may be used for CWA purposes, whether or not approved by USEPA.

6. **Antidegradation Policy.** Section 131.12, title 40 of the Code of Federal Regulations (40 CFR 131.12) requires that the state water quality standards include an antidegradation policy consistent with the federal policy. The State Water Board established California's antidegradation policy in State Water Board Resolution No. 68-16. Resolution No. 68-16 incorporates the federal antidegradation policy where the federal policy applies under

federal law. Resolution No. 68-16 requires that existing water quality be maintained unless degradation is justified based on specific findings. The Regional Water Board's Basin Plan implements, and incorporates by reference, both the State and federal antidegradation policies. The permitted discharge must be consistent with the antidegradation provision of 40 CFR 131.12 and State Water Board Resolution No. 68-16. Section IV.D.2 of this Fact Sheet discusses how the requirements of this Order satisfy the Antidegradation Policy.

7. **Anti-Backsliding Requirements.** Sections 402(o)(2) and 303(d)(4) of the CWA and federal regulations at 40 CFR 122.44(l) prohibit backsliding in NPDES permits. These anti-backsliding provisions require that effluent limitations in a reissued permit must be as stringent as those in the previous permit, with some exceptions in which limitations may be relaxed. Section IV.D.1 of this Fact Sheet provides a detailed discussion of how the requirements of this Order satisfy anti-backsliding requirements.

D. Impaired Water Bodies on CWA 303(d) List

Section 303(d) of the federal CWA requires states to identify waterbodies that do not meet water quality standards and are not supporting their beneficial uses after implementation of technology-based effluent limitations on point sources. Each state must submit an updated list, the 303(d) List of Impaired Waterbodies, to USEPA by April of each even numbered year. In addition to identifying the waterbodies that are not supporting beneficial uses, the 303(d) list also identifies the pollutant or stressor causing impairment and establishes a schedule for developing a control plan to address the impairment. USEPA requires the Regional Water Board to develop total maximum daily loads (TMDLs) for each 303(d) listed pollutant and water body contaminant. TMDLs establish the maximum quantity of a given pollutant that can be added to a water body from all sources without exceeding the applicable water quality standard for that pollutant and determine wasteload allocations (the portion of a TMDL allocated to existing and future point sources) for point sources and load allocations (the portion of a TMDL attributed to existing and future nonpoint sources) for nonpoint sources.

In June 2007, USEPA provided final approval of the 303(d) list of impaired water bodies prepared by the State. The list identifies the Upper Main Fork of the Eel River is 303(d) listed as impaired by sedimentation/siltation and temperature. On December 29, 2004, USEPA approved a TMDL addressing sediment and temperature in the Upper Main Eel River and its tributaries, including Outlet Creek. Regarding temperature, the TMDL concludes that most sources of heat in the Upper Main Eel watershed are the result of non-point sources, primarily caused by removing riparian vegetation, timber harvesting, road building, grazing, and urbanization. As the critical time period for temperature is in the summer, the TMDL was established for that critical time period, which is also the time period when point source discharges from the Facility are prohibited. Because of the summer discharge prohibition, the Facility does not contribute to temperature loadings to the Upper Main Eel River. The TMDL states that there are no point sources in the Upper Main Eel Watershed, therefore the wasteload allocation in the watershed is zero. The Regional Water

Board interprets this wasteload allocation to mean that, as long as the Discharger adheres to the summer discharge prohibition, it will be in compliance with the approved TMDL for temperature.

The TMDL establishes a maximum loading of 125 percent of the natural sediment loading for the watershed and further defines that loading rate as 388 tons of sediment per square mile of watershed per year. The TMDL found that non-point sources were primarily responsible for most sediment loading in the watershed, but identified CalTrans facilities and construction sites as point sources. The Facility was not identified as a point source and no wasteload allocation was established for the Facility. In order to be protective of Basin Plan water quality objectives for sediment in the Upper Main Eel watershed, this Order retains effluent concentration limitations for the existing WWTF applicable to settleable solids and total suspended solids from Order No. R1-2001-71 for discharges to Outlet Creek.

E. Other Plans, Polices and Regulations

1. **Storm Water.** All areas within the treatment facility drain to two storm drain inlets on the property where storm water is routed to the headworks. The State Water Board Water Quality Order No. 97-03-DWQ, NPDES General Permit No. CAS000001, Waste Discharge Requirements for Discharges of Storm Water Associated with Industrial Activities Excluding Construction Activities, does not require facilities to obtain coverage if storm water is captured and treated and/or disposed of within the facility's NPDES permitted process wastewater or if storm water is disposed of to evaporation ponds, percolation ponds, or combined sewer systems. Therefore, coverage under the General Storm Water Permit is not required for this Facility.

2. **Sanitary Sewer Systems.** On May 2, 2006, the State Water Board adopted State Water Board Order No. 2006-0003-DWQ, *Statewide General WDRs for Sanitary Sewer Systems.* The general permit is applicable to all “federal and state agencies, municipalities, counties, districts, and other public entities that own or operate sanitary sewer systems greater than one mile in length that collect and/or convey untreated or partially treated wastewater to a publicly owned treatment facility in the State of California.” The purpose of the general permit is to promote the proper and efficient management, operation, and maintenance of sanitary sewer systems and to minimize the occurrences and impacts of sanitary sewer overflows. Section VI.C.5.a of the Order requires the Discharger to seek/maintain coverage under Order No. 2006-0003-DWQ, and restates some provisions of the general permit.

3. **Discharge of Biosolids to Land.** On July 22, 2004, the State Water Board adopted State Water Board Order No. 2004-0012-DWQ, *General Waste Discharge Requirements for the Discharge of Biosolids to Land for Use as a Soil Amendment in Agricultural, Silvicultural, Horticultural, and Land Reclamation Activities*. The general waste discharge requirements establish standards for agronomic applications and the use of biosolids as a soil amendment or fertilizer in agriculture, forestry, and surface mining reclamation, and include provisions to mitigate significant environmental impacts. The Order requires the

Discharger to obtain coverage under Order No. 2004-0012-DWQ or other appropriate WDRs for the discharge of biosolids from the wastewater treatment plant. Section VI.C.5.f of the Order requires the Discharger to seek coverage under Order No. 2004-0012-DWQ, if applicable, and restates some provisions of the general permit.

IV. RATIONALE FOR EFFLUENT LIMITATIONS AND DISCHARGE SPECIFICATIONS

The CWA requires point source dischargers to control the amount of conventional, non-conventional, and toxic pollutants that are discharged into the waters of the United States. The control of pollutants discharged is established through effluent limitations and other requirements in NPDES permits. There are two principal bases for effluent limitations in the 40 CFR 122.44(a) requires that permits include applicable technology-based limitations and standards; and 40 CFR 122.44(d) requires that permits include water quality-based effluent limitations (WQBELs) to attain and maintain applicable numeric and narrative water quality criteria to protect the beneficial uses of the receiving water. Where the discharge has the reasonable potential to cause or contribute to an excursion above a narrative criterion, but numeric water quality objectives have not been established, WQBELs may be established using one or more of three methods described at 40 CFR 122.44(d)(vi). First, WQBELs may be established using a calculated water quality criterion, such as a proposed State criterion or an explicit State policy or regulation interpreting its narrative criterion. Second, WQBELs may be established on a case-by-case basis using USEPA criteria guidance published under CWA section 304(a). Third, WQBELs may be established using an indicator parameter for the pollutant of concern.

A. Discharge Prohibitions

1. **Prohibition III.A.** The discharge of any waste not disclosed by the Discharger or not within the reasonable contemplation of the Regional Water Board is prohibited.

   This prohibition is based on the Basin Plan, the previous Order (Order No. R1-2001-71), and State Water Board Order WQO 2002-0012 regarding the petition of WDR Order No. 01-072 for the East Bay Municipal Utility District and Bay Area Clean Water Agencies. In State Water Board Order WQO 2002-0012, the State Water Board found that this prohibition is acceptable in Orders, but should be interpreted to apply only to constituents that are either not disclosed by the Discharger or are not reasonably anticipated to be present in the discharge, but have not been disclosed by the Discharger. It specifically does not apply to constituents in the discharge that do not have “reasonable potential” to exceed water quality objectives.

   The State Water Board has stated that the only pollutants not covered by this prohibition are those which were “disclosed…or…can be reasonably contemplated.” (In re the Petition of East Bay Municipal Utilities District et al., (State Water Board 2002) Order No. WQ 2002-0012, p. 24) In that Order, the State Water Board cited a case which held the Discharger is liable for discharge of pollutants not “within the reasonable contemplation of the permitting authority”…, (Piney Run Preservation Assn. v. County Commissioners of Carroll County, Maryland (4th Cir. 2001) 368 F .3d 255, 268.) Thus, State Water Board

authority provides that, to be permissible, the constituent discharged (1) must have been disclosed by the Discharger or (2) can be reasonably contemplated by the Regional Water Board.

Whether or not the Discharger reasonably contemplates the discharge of a constituent is not relevant. What matters is whether the Discharger disclosed the constituent to the Regional Water Board or whether the presence of the pollutant in the discharge can otherwise by reasonably contemplated by the Regional Water Board at the time of Order adoption.

2. **Prohibition III.B.** Creation of pollution, contamination, or nuisance, as defined by section 13050 of the Water Code, is prohibited.

   This prohibition is based on section 13050 of the Water Code. It has been retained from Order No. R1-2001-71.

3. **Prohibition III.C.** The discharge of sludge or digester supernatant is prohibited, except as authorized under section VI.C.5.c (Solids Disposal and Handling requirements).

   This prohibition is based on restrictions on the disposal of sewage sludge found in federal regulations (40 CFR Part 503 (Biosolids), Part 527, and Part 258) and title 27 Cal. Code of Regs. It has been retained from Order No. R1-2001-71.

4. **Prohibition III.D.** The discharge or reclamation use of untreated or partially treated waste (receiving a lower level of treatment than described in section II.A of the Fact Sheet) from anywhere within the collection, treatment, or disposal system is prohibited, except as provided for in Prohibition III.E and in Attachment D, Standard Provision G (Bypass).

   This Prohibition has been retained from Order No. R1-2001-71 and is based on the Basin Plan to protect beneficial uses of the receiving water from unpermitted discharges, and the intent of Water Code sections 13260 through 13264 relating to the discharge of waste to waters of the State without filing for and being issued an Order. This prohibition applies to spills not related to sanitary sewer overflows (SSOs) and other unauthorized discharges of wastewater within the collection, treatment, and disposal facilities. The discharge of untreated or partially treated wastewater from the collection, treatment, or disposal facility represents an unauthorized bypass pursuant to 40 CFR 122.41(m) or an unauthorized discharge which poses a threat to human health and/or aquatic life, and therefore, is explicitly prohibited by this Order.

5. **Prohibition III.E.** Any SSO that results in a discharge of untreated or partially treated wastewater to (a) waters of the United States, (b) groundwater, or (c) land that creates a pollution, contamination, or nuisance as defined in Water Code section 13050(m) is prohibited.

This prohibition applies to spills related to SSOs and is based on State standards, including section 13050 of the Water Code and the Basin Plan. This prohibition is consistent with the States' antidegradation policy as specified in State Water Board Resolution No. 68-16 (Statement of Policy with Respect to Maintaining High Quality of Waters in California) in that the prohibition imposes conditions to prevent impacts to water quality, does not allow the degradation of water quality, will not unreasonably affect beneficial uses of water, and will not result in water quality less that that prescribed in State Water Board or Regional Water Board plans and policies.

This prohibition is stricter than the prohibitions stated in State Water Board Order 2006-0003-DWQ, *Statewide General WDRs for Sanitary Sewer Systems*. Order 2006-0003-DWQ prohibits SSOs that result in the discharge of untreated or partially treated wastewater to waters of the United States and SSOs that create a nuisance. Prohibition III.E of this Order further prohibits any SSO that results in the discharge of untreated or partially treated wastewater to groundwater due to the prevalence of high groundwater in this Region and this Region's reliance on groundwater as a drinking water source.

6. **Prohibition III.F.** The discharge of waste to land that is not owned by or under agreement to use by the Discharger is prohibited, except for use for fire suppression as provided in title 22, sections 60307 (a) and (b) of the California Code of Regulations.

   This prohibition is retained from Order No. R1-2001-71. Land used for the application of wastewater must be owned by the Discharger or be under control of the Discharger by contract so that the Discharger maintains a means for ultimate disposal of treated wastewater.

7. **Prohibition III.G.** The discharge of waste at any point not described in Finding II.B or authorized by a permit issued by the State Water Board or another Regional Water Board is prohibited.

   This prohibition is a general prohibition that allows the Discharger to discharge waste only in accordance with WDRs. It is based on sections 301 and 402 of the federal CWA and section 13263 of the Water Code.

8. **Prohibition III.H.** The discharge of treated wastewater from the WWTF to the Eel River or its tributaries is prohibited during the period May 15 through September 30 of each year.

   This prohibition is required by the Basin Plan. The Basin Plan prohibits discharges to the Eel River and its tributaries during the period May 15 through September 30 (Chapter 4, Waste Discharge prohibitions for the North Coastal Basin).

9. **Prohibition III.I.** The discharge of septage to a location other than an approved septage receiving station is prohibited.

This prohibition is necessary to ensure that the Discharger is aware of all discharges of septage into the treatment system so that pollutants associated with domestic septage do not pass through or interfere with the operation or performance of the WWTF.

10. **Prohibition III.J**. The mean daily dry weather flow of waste through the existing treatment plant shall not exceed 1.3 mgd, measured at INF-001 over a calendar month. The wet weather flow of waste through the existing treatment plant shall not exceed peak flows of 3.0 mgd, measured continuously at INF-001, calculated daily and averaged over a calendar month.

    This prohibition is retained from the previous permit and is based on the dry weather and peak hydraulic treatment capacity of the existing Facility.

11. **Prohibition III.K**. The mean daily flow of waste through the new treatment plant shall not exceed 4.0 mgd, measured continuously at INF-001, calculated daily and averaged over a calendar month.

    This prohibition represents a fraction of the new WWTF treatment and hydraulic design capacity of 7.0 mgd. This prohibition correspond to the treatment capacity deemed necessary by the Discharger to adequately treat current and anticipated waste flows for the term of this Order. As the community grows, the Discharger may request that this limit be increased, up to the full treatment capacity design of 7.0mgd. Any additional increase from the current limit of 4.0 mgd will require that the permit be reopened and must be approved by the Regional Water Board after appropriate analysis and consideration.

B. Technology-Based Effluent Limitations

1. Scope and Authority

Section 301(b) of the CWA and implementing USEPA permit regulations at 40 CFR 122.44 require that permits include conditions meeting applicable technology-based requirements at a minimum, and any more stringent effluent limitations necessary to meet applicable water quality standards. The discharge authorized by this Order must meet minimum federal technology-based requirements based on Secondary Treatment Standards at 40 CFR Part 133.

Regulations promulgated in 40 CFR 125.3(a)(1) require technology-based effluent limitations for municipal Dischargers to be placed in NPDES permits based on Secondary Treatment Standards or Equivalent to Secondary Treatment Standards.

The Federal Water Pollution Control Act Amendments of 1972 (PL 92-500) established the minimum performance requirements for POTWs [defined in section 304(d)(1)]. Section 301(b)(1)(B) of that Act requires that such treatment works must, as a minimum, meet effluent limitations based on secondary treatment as defined by the USEPA Administrator.

Based on this statutory requirement, USEPA developed secondary treatment regulations, which are specified in 40 CFR Part 133. These technology-based regulations apply to all municipal wastewater treatment plants and identify the minimum level of effluent quality attainable by secondary treatment in terms of 5-day biochemical oxygen demand (BOD_5), total suspended solids (TSS), and pH as follows:

a. BOD_5 and TSS

i. The 30-day average shall not exceed 30 mg/L.

ii. The 7-day average shall not exceed 45 mg/L.

iii. The 30-day average percent removal shall not be less than 85%.

b. pH

i. The pH shall be maintained within the limits of 6.0 to 9.0.

In addition, 40 CFR 122.45(f) requires the establishment of mass-based effluent limitations for all pollutants limited in Orders, except for 1) pH, temperature, radiation, or other pollutants which cannot be appropriately expressed by mass, 2) when applicable standards and limitations are expressed in terms of other units of measure, and 3) where the permit limitation is established on a case-by-case basis under 40 CFR 125.3, and the limitations expressed in terms of mass are infeasible because the mass of the pollutant discharged cannot be related to a measure of operation, and permit conditions ensure that dilution will not be used as a substitute for treatment. Pollutants limited in terms of mass additionally may be limited in terms of other units of measurement, and the permit shall require that permittee to comply with both limitations. Mass-based effluent limitations are based on the facility design flow.

Technology-based effluent limitations may be set on a case-by-case basis under section 402(a)(1) of the CWA to the extent that EPA-promulgated effluent limitations are inapplicable based upon the available information and unique factors related to the applicant. A combination of EPA-promulgated effluent limitations and effluent limitations developed under a case-by-case basis scenario may be applied to carry out the provisions of the CWA.

Alternative requirements, described as “Best Practicable Control Technology” (BPT) requirements may be established by a permitting authority on a case-by-case basis considering the appropriate factors listed at 40 CFR 125.3(d)(1). Factors to be considered for BPT requirements include:

a. The total cost of application of the technology in relation to the effluent reduction benefits to be achieved from such application;

b. The age of equipment and facilities involved;

c. The process employed;

d. The engineering aspects of the application of various types of control techniques;

e. Process changes; and

f. Non-water quality environmental impacts (including energy requirements).

2. Applicable Technology-Based Effluent Limitations

a. Existing WWTF

i. BOD_5 and TSS. Federal regulations at 40 CFR Part 133, establish the minimum weekly and monthly average level of effluent quality attainable by secondary treatment for BOD_5 and TSS. This Order includes effluent limitations for BOD_5 and TSS consistent with the secondary treatment requirements established in 40 CFR Part 133. A daily maximum effluent limitation for discharges between October 1st and May 14th for BOD_5 and TSS is also included in the Order to ensure that the treatment works are not organically overloaded and operate in accordance with design capabilities. Mass emission limitations are based on the Facility's current design average dry weather treatment capacity of 1.3 mgd. In addition, 40 CFR 133.102, in describing the minimum level of effluent quality attainable by secondary treatment, states that the 30-day average percent removal shall not be less than 85 percent. This Order contains a limitation requiring an average of 85 percent removal of BOD_5 and TSS over each calendar month.

ii. pH. The secondary treatment regulations at 40 CFR Part 133 also require that pH be maintained between 6.0 and 9.0 standard units. Note that a more stringent effluent limitation range of 6.5 – 8.5 for pH required to meet the water quality objective for hydrogen ion concentration (pH) in the Eel River is contained in the Basin Plan, Table 3-1.

This Order establishes the following technology-based effluent limitations, applicable to the existing WWTF for discharges from Discharge Point 001.

Table F-4. Summary of Technology-based Effluent Limitations – Existing WWTF

Parameter	Units	Effluent Limitations				
		Average Monthly	Average Weekly	Maximum Daily	Instantaneous Minimum	Instantaneous Maximum
Biochemical Oxygen Demand (5-day @ 20°C)	mg/L	30	45	60	--	--
	lbs/day[11,12]	325	488	650	--	--
	% Removal[13]	85	--	--	--	--
Total Suspended Solids	mg/L	30	45	60	--	--
	lbs/day[11,12]	325	488	650	--	--
	% Removal[13]	85	--	--	--	--
pH	standard units	--	--	--	6.0[14]	9.0[14]

b. New WWTF

i. BOD_5 and TSS. Treated effluent from the Facility may be discharged to Outlet Creek just downstream of the confluence of Baechtel Creek and Broaddus Creek during the winter discharge period of October 1 to May 14. The Facility is located in Little Lake Valley in the upper portion of the Eel River watershed. Stream flows in Little Lake Valley fluctuate rapidly, increasing in response to storm events and diminishing rapidly after each storm. Treated effluent flow from the Facility frequently exceeds 1 percent of the receiving water flow in violation of permit and Basin Plan requirements. The Discharger has been under a CDO to comply with the Basin Plan discharge rate requirements since June 28, 2001. The Discharger plans construction of a new WWTF utilizing an enhanced extended aeration activated sludge mechanical enhanced secondary treatment process with nutrient removal, UV disinfection, followed by effluent treatment and storage within new enhanced treatment wetlands to comply with the criteria for an exception from the rate limitations set forth in Prohibition 3 of the Basin Plan, which are discussed in detail under section IV.C.1 of this Fact Sheet.

In accordance with 40 CFR 125.3(c), a combination of EPA-promulgated and case-by-case technology-based effluent limitations has been established for the

---

11 The mass discharge (lbs/day) is obtained from the following calculation for any calendar week or month:

$$\frac{8.34}{N}\sum^{N} Q_i C_i$$

in which N is the number of samples analyzed in any calendar week or month. Q_i and C_i are the flow rate (mgd) and the constituent concentration (mg/L), respectively, which are associated with each of the N grab samples, which may be taken in any calendar week or month. If a composite sample is taken, C_i is the concentration measured in the composite sample and Q_i is the average flow rate occurring during the period over which samples are composited.

12 Mass-based effluent limitations are based on the average dry weather flow of 1.3 mgd.

13 Percent removal is determined for both BOD_5 and TSS through comparison of the monthly average concentrations measured in the influent and effluent.

14 The final effluent limitation for pH is established between 6.5 and 8.5 based upon the more stringent water quality criteria.

new WWTF. In setting case-by-case limitations pursuant to 40 CFR 125.3 and based on BPT, the Regional Water Board considered the factors set forth in 40 CFR 125.3(d). This information was provided by the Discharger in its March 2007 Variance Request for an Exception to the Water Quality Control Plan for the North Coast Region Discharge Rate Limitation (Exception Request). The Exception Request, which demonstrated the capabilities of the new WWTF, explains that the new WWTF will be capable of consistently treating wastewater to enhanced secondary level quality through the operation of new enhanced extended aeration activated sludge mechanical secondary treatment process with nutrient removal, UV disinfection, followed by enhanced effluent treatment and storage within new enhancement wetlands. Enhanced secondary level treatment is defined under these circumstances as the ability to achieve 10 mg/L as a monthly average for BOD_5 and TSS.

An average weekly effluent limitation for BOD_5 and TSS has also been established in the Order as required by 40 CFR 122.45(d)(2), which states that effluent limitations for POTWs must be expressed as average weekly and average monthly limitations unless impracticable. In accordance with 40 CFR 133.101, the average weekly limitation was calculated by multiplying the average monthly limitation of 10 mg/L by 1.5 to obtain a result of 15 mg/L.

Concentration-based limitations for BOD_5 and TSS reflect enhanced secondary treatment and are more restrictive than limitations for the existing WWTF. The mass emission limitations are based on the Facility's new permitted annual average flow of 4.0 mgd.

The 30-day average percent removal requirement established by this Order for the new WWTF is 85 percent as required by the secondary treatment standards established at 40 CFR Part 133.

ii. pH. The secondary treatment regulations at 40 CFR Part 133 also require that pH be maintained between 6.0 and 9.0 standard units. Note that a more stringent effluent limitation for pH required to meet the water quality objective for hydrogen ion concentration (pH) is contained in the Basin Plan, Table 3-1.

This Order establishes the following technology-based effluent limitations, applicable to the new WWTF for Discharge Point 002.

Table F-5. Summary of Technology-based Effluent Limitations – New WWTF

Parameter	Units	Effluent Limitations			
		Average Monthly	Average Weekly	Instantaneous Minimum	Instantaneous Maximum
Biochemical Oxygen Demand (5-day @ 20°C)	mg/L	10	15	--	--
	lbs/day[11,15]	334	500	--	--

Parameter	Units	Effluent Limitations			
		Average Monthly	Average Weekly	Instantaneous Minimum	Instantaneous Maximum
	% Removal[13]	85	--	--	--
Total Suspended Solids	mg/L	10	15	--	--
	lbs/day[11,15]	334	500	--	--
	% Removal[13]	85	--	--	--
pH	standard units	--	--	6.0[14]	9.0[14]

C. Water Quality-Based Effluent Limitations (WQBELs)

1. Scope and Authority

Section 301(b) of the CWA and NPDES regulations at 40 CFR 122.44(d) require that permits include limitations more stringent than applicable federal technology-based requirements where necessary to achieve applicable water quality standards, including numeric and narrative objectives within a standard.

40 CFR 122.44(d)(1)(i) mandates that permits include effluent limitations for all pollutants that are or may be discharged at levels that have the reasonable potential to cause or contribute to an exceedance of a water quality standard, including numeric and narrative objectives within a standard.

A reasonable potential analysis (RPA) demonstrated reasonable potential for discharges from the existing WWTF to cause or contribute to exceedances of applicable water quality criteria for chlorine residual, cyanide, dichlorobromomethane, pH, settleable solids, and total coliform organisms.

An RPA demonstrated reasonable potential for discharges from the new WWTF to cause or contribute to exceedances of applicable water quality criteria for ammonia, cyanide, nitrate, total nitrogen, pH, settleable solids, and total coliform organisms.

Where reasonable potential has been established for a pollutant, but there is no numeric criterion or objective for the pollutant, WQBELs must be established in accordance with the requirements of 40 CFR 122.44(d)(1)(vi), using: (1) USEPA criteria guidance under CWA section 304(a), supplemented where necessary by other relevant information; (2) an indicator parameter for the pollutant of concern; or (3) a calculated numeric water quality criterion, such as a proposed state criterion or policy interpreting the state's narrative criterion, supplemented with other relevant information.

The process for determining "reasonable potential" and calculating WQBELs when necessary is intended to protect the designated uses of the receiving water as specified in the Basin Plan, and achieve applicable water quality objectives and criteria that are

[15] Mass-based effluent limitations are based on the permitted annual average flow of 4.0 mgd.

contained in the Basin Plan and in other applicable State and federal rules, plans, and policies, including applicable water quality criteria from the CTR and the NTR.

Section 4 of the Basin Plan limits discharges to the Eel River and its tributaries to releases not exceeding 1 percent (1:100) of the receiving stream's flow during the allowable discharge season. As described under section II.D of this Fact Sheet, the Discharger has been under CDOs to comply with Basin Plan discharge rate requirements since June 28, 2001.

The Basin Plan indicates that the Regional Water Board will consider for cause exceptions to the waste discharge rate limitations and requires that exceptions be defined in NPDES permits for each discharger, on a case by case basis. The Discharger has applied for an exception to the waste discharge rate limitation. The Discharger has demonstrated consistency with Basin Plan exception requirements for a discharge rate at 10 percent of the receiving water flow (1:10) as follows:

a. *The wastewater treatment facility shall be reliable.*

The Discharger will construct a new WWTF including an enhanced extended aeration activated sludge mechanical secondary treatment process with nutrient removal, UV disinfection, followed by enhanced effluent treatment and storage within new enhancement wetlands. UV disinfection has been shown to be more effective than chlorine in denaturing viruses and provides a higher level of pathogen removal than chlorine disinfection. Extended aeration and treatment wetland (enhancement wetland) technologies that will be applied at the new WWTF will produce reliably high quality effluent of enhanced secondary level quality.

b. *Reliability shall be demonstrated through analysis of the features of the facility including, but not limited to, system redundancy, proper operation and maintenance, and backup storage capacity to prevent the threat of pollution or nuisance.*

The new WWTF will be designed to accept a wide range of hydraulic loads, which will be ensured through upgrades to the headworks facility (completed), construction of a new mechanical activated sludge process, and installation of a unit processes control system. The new WWTF will have the ability to store both influent and effluent in the existing 16 million gallon storm bypass/overflow ponds. This upfront storage can be used to equalize high influent flows and provide emergency storage in the event of mechanical treatment process upset or routine operation and maintenance needs. Emergency storage of 29 million gallons (90 ac-ft) of effluent can be accommodated in the enhancement wetlands. Redundancy in the power systems will be achieved through new main power transmission lines and emergency power generators. Additionally, the enhancement wetlands operate without electrical energy and will remain functional through any power upsets.

c. *The discharge of waste shall be limited to rates and constituent levels which protect the beneficial uses of the receiving waters.*

In conjunction with the application for NPDES permit renewal, the Discharger submitted an Exception Request. The analysis provided by the Discharger in the Exception Request, and reviewed by the Regional Water Board Staff, demonstrates that the discharge from the WWTF will be limited to concentrations and rates protective of beneficial uses identified under Table F-3 of this Fact Sheet.

d. *Protection shall be demonstrated through analysis of all the beneficial uses of the receiving waters. For receiving waters which support domestic water supply (MUN) and water contact recreation (REC1), analysis shall include expected normal and extreme weather conditions within the discharge period, including estimates of instantaneous and long-term minimum, average, and maximum discharge flows and percent dilution in receiving waters. The analysis shall evaluate and address cumulative effects of all discharges, including point and nonpoint source contributions, both in existence and reasonably foreseeable. For receiving waters which support domestic water supply (MUN), the Regional Water Board shall consider the California Department of Health Services evaluation of compliance with the Surface Water Filtration and Disinfection Regulations contained in Section 64650 through 64666, Chapter 17, title 22 of the California Code of Regulations. Demonstration of protection of beneficial uses shall include consultation with the California Department of Fish and Game regarding compliance with the California Endangered Species Act.*

The Exception Request includes an analysis that compares the potential cumulative effects of the discharge of the enhanced secondary treated wastewater that could occur under extreme conditions on the existing receiving water quality, with the existing effluent quality, and models the projected conditions. Constituents that were identified and compared to water quality objectives in the Basin Plan for the protection of beneficial uses include: color, taste and odor, floating materials, suspended material, settleable material, oil and grease, biostimulatory substances (i.e., nitrogen, phosphorus, and chlorophyll-a), sediment, turbidity, dissolved oxygen, pH, bacteria (i.e., total coliform and fecal coliform), temperature, toxicity (i.e., whole effluent toxicity, ammonia toxicity, and nitrate toxicity), pesticides, chemical constituents (i.e., specific conductance, total dissolved solids, cyanide, and dichlorobromomethane), and radioactivity.

e. *The exception shall be limited to that increment of wastewater which remains after reasonable alternatives for reclamation have been addressed.*

The Discharger reclaims all treated wastewater from May 15 through September 30 each year. Additional periods of reclamation occur as weather permits. The Discharger indicated in the Exception Request that further opportunities to reclaim water have been evaluated in the past, however the industries identified that might use the reclaimed water are no longer in operation. The Discharger plans to explore additional reclamation opportunities in the future, including irrigation of community areas such as parks and a recently constructed ball field.

f. *The exception shall comply with State Water Board Resolution No. 68-16, "Statement of Policy with Respect to Maintaining High Quality Waters in California," and the federal regulations covering antidegradation (40 CFR 131.12).*

The Exception Request concludes that the new WWTF complies with and meets the requirements of the State and federal antidegradation policies, as outlined below:

i. Existing water quality objectives and beneficial uses of Outlet Creek and the Eel River will be protected and/or not adversely affected.

ii. The proposed WWTF system is necessary to the economic and social needs of the Willits, Brooktrails, and Meadowbrook Manor communities.

iii. The proposed WWTF system provides a best practicable treatment method for water quality protection, and reducing and managing effluent nutrient loads into Outlet Creek.

iv. The proposed WWTF system will improve existing water quality conditions in Outlet Creek.

v. The proposed WWTF system discharging effluent at a 10 percent discharge rate provides the same or better water quality protection as the 1:100 existing permitted condition.

g. *There shall be no discharge of waste during the period May 15 through September 30.*

The Order prohibits discharges to surface water between May 15 and September 30 each year, during which time the Discharger reuses effluent for spray irrigation onto adjacent pasture land.

In conjunction with the Exception Request, the Discharger identified COCs associated with discharges from the new WWTF. Effluent and receiving water analyses coupled with computer modeling demonstrates reasonable potential for discharges from the Facility (existing and or new WWTF) to cause or contribute to exceedances of applicable water quality criteria associated with ammonia (new only) chlorine (existing only), cyanide, dichlorobromomethane (existing only), nitrate (new only), total nitrogen (new only), pH, settleable solids, and total coliform organisms. WQBELs must, therefore, be developed for these COCs. Based upon the analyses provided in the Exception Request, which compares each of these COCs to the water quality criteria for the protection of beneficial uses of receiving water, the WQBELs established in this Order will protect beneficial uses at the increased rate of discharge (1:10).

2. Applicable Beneficial Uses and Water Quality Criteria and Objectives

a. Beneficial Uses. Beneficial use designations for receiving waters for discharges from the Facility are discussed in Finding II.H of the Order and section III.C.1 of this Fact Sheet.

b. Basin Plan Water Quality Objectives. In addition to specific water quality objectives, the Basin Plan contains narrative objectives for color, tastes and odors, floating material, suspended material, settleable material, oil and grease, biostimulatory substances, sediment, turbidity, pH, dissolved oxygen, bacteria, temperature, toxicity, pesticides, chemical constituents, and radioactivity that apply to inland surface waters, enclosed bays, and estuaries, including Outlet Creek and the Eel River.

c. State Implementation Policy (SIP), CTR, and NTR. Water quality criteria and objectives applicable to this receiving water are established by the California Toxics Rule (CTR), established by the USEPA at 40 CFR 131.38; and the National Toxics Rule (NTR), established by the USEPA at 40 CFR 131.36. Criteria for most of the 126 priority pollutants are contained within the CTR and the NTR.

Aquatic life freshwater and saltwater criteria are further identified as criterion maximum concentrations (CMC) and criterion continuous concentrations (CCC). The CTR defines the CMC as the highest concentration of a pollutant to which aquatic life can be exposed for a short period of time without deleterious effects and the CCC as the highest concentration of a pollutant to which aquatic life can be exposed for an extended period of time (4 days) without deleterious effects. The CMC is used to calculate an acute or 1-hour average numeric effluent limitation and the CCC is used to calculate a chronic or 4-day average numeric effluent limitation. Aquatic life freshwater criteria were used for the RPA, and for the calculation of effluent limitations for pollutants that showed reasonable potential.

Human health criteria are further identified as “water and organisms” and “organisms only.” The criteria from the “water and organisms” column of the CTR were used for the RPA, as the receiving water, Outlet Creek, tributary to the Eel River, has the beneficial use designation as a municipal and domestic supply.

At title 22, Division 4, Chapter 15, Cal. Code of Regs, the Department of Public Health (DPH) has established Maximum Contaminant Levels (MCLs) for certain pollutants. Chapter 3 of the Basin Plan establishes these MCLs as water quality objectives applicable to receiving waters with the beneficial use designation of municipal and domestic supply

The SIP, which is described in Finding II.J of the Order and section III.C.3 of the Fact Sheet, includes procedures for determining the need for and calculating WQBELs and requires dischargers to submit data sufficient to do so. Table F-6 summarizes applicable water quality criteria/objectives for each priority pollutant that has been

detected at a measurable concentration in the effluent or in the receiving water during the term of Order No. R1-2001-71.

Table F-6. Applicable Water Quality Criteria

Constituent	Water Quality Criteria (µg/L)			
	title 22 MCLs	CTR/NTR Aquatic Life		CTR/NTR Human Health
		Acute	Chronic	
Arsenic, Total Recoverable	50	340	150	--
Lead, Total Recoverable	--	23[16]	0.9[16]	--
Mercury, Total Recoverable	2.0	--	--	0.050
Nickel, Total Recoverable	100	202[16]	23[16]	--
Silver, Total Recoverable	--	0.7[16]	--	--
Zinc, Total Recoverable	--	52[16]	52[16]	--
Cyanide, Total Recoverable	150	22	5.2	700
Chloroform	--	--	--	--
Dichlorobromomethane	--	--	--	0.56
Toluene	150	--	--	6,800
1,4-Dichlorobenzene	5	--	--	400

3. Determining the Need for WQBELs

a. Non-Priority Pollutants

i. **pH.** The Order retains an effluent limitation for pH of 6.5 to 8.5 from Order No. R1-2001-71. This limitation is based on the water quality objective for Outlet Creek established by the Basin Plan Table 3-1 (Chapter 3). This effluent limitation will be in effect for both the existing and new WWTF.

ii. **Total Coliform Bacteria.** Coliform bacteria are a pollutant of concern in all wastewaters of domestic origin, and therefore, the Order retains effluent limitations for total coliform bacteria from Order No. R1-2001-71. These effluent limitations will ensure that water quality objectives for bacteria, as established by Chapter 3 of the Basin Plan, will be maintained. The specific limitations are based on requirements established by California Department of Public Health (CDPH) at title 22, Cal. Code of Regs, Division 4, Chapter 3 (Water Recycling Criteria, and are those levels of bacteria required for the reclamation use of treated wastewater for surface irrigation of (i) pasture used for animals producing milk for human consumption and (ii) any nonedible vegetation where access is controlled. This effluent limitation will be in effect for both the existing and new WWTF.

[16] Aquatic life criteria for this metal are hardness dependent (in general, as hardness decreases, metal toxicity increases). For this metal, a hardness of 37 mg/L $CaCO_3$, the lowest hardness measured in the receiving water, was used to determine "reasonable potential." If an effluent limitation was required based on a finding of "reasonable potential" for this metal, the Order requires a determination of limitations based on actual receiving water hardness measured at the time of compliance determination.

iii. **Settleable Solids.** Effluent limitations for settleable solids are retained from Order No. R1-2001-71 and reflect levels of treatment attainable by secondary treatment facilities. This limitation is based on the water quality objective prohibiting bottom deposits for all surface waters of the North Coast Region established by the Basin Plan. This effluent limitation will be in effect for both the existing and new WWTF.

iv. **Chlorine Residual.** The Basin Plan establishes a narrative water quality objective for toxicity, stating that "[a]*ll waters shall be maintained free of toxic substances in concentrations that are toxic to, or that produce detrimental physiological responses in human, plant, animal, or aquatic life."* The Regional Water Board considers any chlorinated discharge as having the reasonable potential to cause or contribute to exceedances of this water quality objective for toxicity, and therefore, the Order establishes effluent limitations for chlorine. USEPA has established the following criteria for chlorine-produced oxidants for protection of freshwater aquatic life. [*Quality Criteria for Water 1986* (The Gold Book, 1986, EPA 440/5/-86-001)]

Chronic Criterion	Acute Criterion
0.011 mg/L	0.019 mg/L

Order No. R1-2001-71 required that there be no detectable level of chlorine in the effluent at the point of discharge. This Order revises effluent limitations for chlorine residual to be consistent with the water quality criteria, which are below current analytical detection limits. The water quality criteria recommended by USEPA have been translated to average monthly and maximum daily effluent limitations for total chlorine residual. These effluent limitations will be in effect until chlorination is no longer used as a disinfection practice at the Facility.

v. **Flow Ratio.** Until the new WWTF is online, during the period of October 1 through May 14, discharges of wastewater shall not exceed 1 percent (1:100) of the flows in Outlet Creek / the Eel River. This effluent limitation is consistent with a prohibition retained from Order No. R1-2001-71 and is a restatement of a Waste Discharge Prohibition established in Chapter 4 of the Basin Plan for the North Coast Basin.

Once both parts of the new WWTF (mechanical and treatment wetlands) are online, discharges of wastewater to Outlet Creek / the Eel River during the period of October 1 through May 14 shall not exceed 10 percent (1:10) of the receiving water flow. The Discharger has submitted an exception request consistent with exception criteria applicable to the Basin Plan prohibition and is intended to protect water quality and beneficial uses during critical low flow periods of the year.

vi. **Nitrogen Compounds.** Untreated domestic wastewater contains ammonia nitrogen. Nitrification is a biological process that converts ammonia to nitrite and

nitrate. Denitrification is a process that converts nitrate to nitrogen gas, which is then released to the atmosphere. Inadequate or incomplete nitrification may result in the discharge of ammonia to the receiving stream and inadequate or incomplete denitrification may result in the discharge of nitrate to the receiving stream. The new WWTF will be designed to use nitrification to remove ammonia from the waste stream and denitrification to remove nitrate from the waste stream, culminating in an overall reduction in total nitrogen.

(a) Total Nitrogen. The Basin Plan contains a narrative water quality objective for biostimulatory substances that states, "[w]*aters shall not contain biostimulatory substances in concentrations that promote aquatic growths to the extent that such growths cause nuisance or adversely affect beneficial uses.*" The Regional Water Board is increasingly concerned about the biostimulatory properties of discharges to surface waters in the North Coast Region. The Exception Request submitted by the Discharger evaluated the potential for biostimulatory effects specific to Outlet Creek from nutrients, such as phosphorus and nitrogen containing compounds, common to treated wastewaters. Stimulation of biological growth can diurnally deplete dissolved oxygen in receiving water below Basin Plan criteria.

Results from site-specific monitoring and modeling indicate that nitrogen is the potential limiting nutrient for biostimulatory activity in Outlet Creek and the Eel River. Table 5-6 of the Discharger's Exception Request indicates that the expected concentration of total nitrogen in effluent from the mechanical extended aeration activated sludge treatment process is 8.0 mg/L. Table 5-7 of the Discharger's Exception Request indicates that the fall and winter season concentration of total nitrogen expected in the discharge from the treatment wetland will be less than 6.0 mg/L. The Exception Request further indicates that total nitrogen concentrations in the effluent to Outlet Creek during the spring time growing season will be less than 1.6 mg/L. Based upon the biostimulatory analysis in the Exception Request, the discharge from the new WWTF at a dilution ratio of 1:10 is expected to increase the overall background total nitrogen levels which will cause an increase in benthic biomass levels in Outlet Creek. However, modeling indicates that the discharge from the proposed WWTF at a 1:10 dilution ratio will significantly decrease total nitrogen loads compared to the discharge from the existing WWTF at a 1:100 dilution ratio and will not increase benthic biomass levels above those for the current permitted condition. Modeling results also indicate that the increased benthic biomass from the discharge of effluent from the new WWTF at a 1:10 dilution ratio would not significantly lower minimum dissolved oxygen levels below background conditions.

In order to support the Discharger's Exception Request, protect groundwater quality, and ensure proper operation of the new WWTF, this Order establishes an effluent limitation for the new WWTF for total nitrogen at 10.0 mg/L to be

met at the point of discharge into the enhancement treatment wetland. The Order establishes two additional limitations for total nitrogen at the discharge from the treatment wetland into Outlet Creek of 6.0 mg/L under most operating conditions and 1.6 mg/L during critical receiving water conditions which occur primarily in the spring. These effluent limitations have been selected based upon results from data and modeling in the Discharger's Exception Request to protect surface water quality and mitigate biosiumlatory effects. Confirmation of modeling assumptions and associated effluent limitations will be evaluated based upon ongoing monitoring of actual conditions over time once the entire new WWTF is online.

(b) Nitrate. Nitrate is known to cause adverse health effects in humans. For waters designated as domestic or municipal supply, the Basin Plan (Chapter 3) adopts the MCLs, established by the CDPH for the protection of public water supplies at title 22 of the California Code of Regulations, section 64431 (Inorganic Chemicals) and 64444 (Organic Chemicals), as applicable water quality criteria. The MCL for nitrate (10 mg/L N) is therefore applicable as a water quality criterion. In order to support the Exception Request, this Order establishes effluent limitations for total nitrogen at 10.0 mg/L which will serve for the protection of human health as well as prevention of biostimulatory effects which could result in diurnal swings of dissolved oxygen concentrations in the receiving water below Basin Plan criteria as described above. Therefore, an individual limitation for nitrate has not been established.

(c) Ammonia. Ammonia is known to cause toxicity to aquatic organisms in surface waters. The Basin Plan establishes a narrative water quality objective for toxicity, stating that "[a]*ll waters shall be maintained free of toxic substances in concentrations that are toxic to, or that produce detrimental physiological responses in human, plant, animal, or aquatic life.*" Due to concerns regarding ammonia toxicity, the Regional Water Board relies on USEPA's recommended water quality criteria for ammonia in fresh water from the 1999 Update of Ambient Water Quality Criteria for Ammonia, EPA-822-R-99-014 (1999) to interpret the Basin Plan's narrative objective for toxicity. USEPA has recommended acute and chronic water quality criteria for the protection of aquatic life, which are dependent on receiving water pH, and the presence/absence of salmonids (acute criteria); and pH, temperature, and the presence/absence of early life stages of fish (chronic criteria). Applying the USEPA acute and chronic ammonia toxicity criteria for periods where salmonids are present the acute and chronic ammonia concentrations in extreme temperature (20°C) and pH (8.5) conditions, as reported in the Exception Request, would be calculated at 2.14 mg/L and 0.76 mg/L, respectively. It should be noted that these temperature and pH receiving water conditions have not actually been observed through monitoring during the discharge period and are very conservative. Expected ammonia concentrations from the new WWTF will be less than 1.0 mg/L based upon the

Discharger's proposal in the Exception Request. Modeling conducted as part of the Discharger's Exception Request indicated that the discharge of an expected ammonia concentration of 1.0 mg/L from the new WWTF does not have a reasonable potential to cause or contribute to an exceedance of the acute criterion for ammonia, but that it does have the potential to cause or contribute to slight exceedances of the chronic criterion in the immediate vicinity of the point of discharge. Modeling indicates that the elevated ammonia levels only occupy a small portion of the channel cross-section at the point of discharge and rapidly decrease downstream and laterally from the point of discharge. Because ammonia levels in the effluent have been measured at concentrations greater than USEPA's recommended water quality criteria for fresh waters, the Regional Water Board concludes that discharges from the Facility have a reasonable potential to cause or contribute to exceedances of the Basin Plan's applicable narrative water quality criterion for toxicity.

In order to support the Exception Request, this Order establishes effluent limitations for ammonia for the protection of aquatic life. Compliance with the effluent limitations for ammonia, which are based on USEPA's recommended water quality criteria, will be determined based on the pH and temperature of the receiving water at the time the discharge is sampled. Full tables of the effluent limitations for ammonia are included in Attachment G. These effluent limitations will take effect once the entire new WWTF is online.

b. Priority Pollutants

i. Reasonable Potential Analysis (RPA). SIP section 1.3 requires the Regional Water Board to use all available, valid, relevant, and representative receiving water and effluent data and information to conduct an RPA. For this RPA, the Regional Water Board has used effluent and receiving water monitoring data generated during two monitoring events that occurred in April 2002 and July 2002.

Some freshwater water quality criteria are hardness-dependent; i.e., as hardness decreases, the toxicity of certain metals increases and the applicable water quality criteria become correspondingly more stringent. For this RPA, a hardness concentration of 37 mg/L $CaCO_3$ was used, reflecting the lowest receiving water hardness reported by the Discharger during the term of Order No. R1-2001-71.

To conduct the RPA, Regional Water Board staff identified the maximum effluent concentration (MEC) and maximum background concentration (B) for each priority pollutant from effluent and receiving water data provided by the Discharger, and compared this information to the most stringent applicable water quality criterion (C) for each pollutant with applicable water quality criteria from the NTR, CTR, and Basin Plan. Section 1.3 of the SIP establishes three triggers for a finding of reasonable potential.

(a) Trigger 1. If the MEC is greater than C, there is reasonable potential, and an effluent limitation is required.

(b) Trigger 2. If B is greater than C, and the pollutant is detected in the effluent (MEC > ND), there is reasonable potential, and an effluent limitation is required.

(c) Trigger 3. After a review of other available and relevant information, a permit writer may decide that a WQBEL is required. Such additional information may include, but is not limited to: the facility type, the discharge type, solids loading analyses, lack of dilution, history of compliance problems, potential toxic impact of the discharge, fish tissue residue data, water quality and beneficial uses of the receiving water, CWA 303(d) listing for the pollutant, and the presence of endangered or threatened species or their critical habitat.

ii. Priority Pollutant Reasonable Potential Determination. The RPA demonstrated reasonable potential for discharges from the existing Facility for cyanide and dichlorobromomethane. Reasonable potential could not be determined for all pollutants, as there are not applicable water quality criteria and/or available monitoring data for all pollutants. The RPA determined that there is either no reasonable potential or there was insufficient information to conclude affirmative reasonable potential for the remainder of the 126 priority pollutants. A new RPA will be conducted for the new WWTF, once online, in accordance with monitoring required under this Order.

The following table summarizes the RPA for each priority pollutant that was reported in detectable concentrations in the effluent from the existing WWTF or background receiving water. The MECs, most stringent WQO/WQCs (C), and background concentrations (B) used in the RPA are presented in the following table, along with the RPA results (yes or no) for each priority pollutant analyzed.

Table F-7. Summary of RPA Results

CTR #	Priority Pollutant	MEC or Minimum DL[17,18]	C	B or Minimum DL[17,18]	RPA Results[19]
2	Arsenic, Total Recoverable	<0.86	50	1.6 (DNQ)	No

[17] The MEC or B is the actual detected concentration unless it is preceded by "<", in which case the value shown is the minimum detection level as the analytical result was reported as not detected (ND). Values reported as DNQ were "detected, but not quantified".

[18] The MEC or B is "Not Available" when there are no monitoring data for the constituent.

[19] RPA Results:
= Yes, if MEC > WQO/WQC, or B > WQO/WQC and MEC is detected;
= No, if MEC and B are < WQO/WQC or all effluent data are undetected;
= Undetermined (Ud), if no criteria have been promulgated;
= Cannot Determine, if there are insufficient data.

CTR #	Priority Pollutant	MEC or Minimum DL[17,18]	C	B or Minimum DL[17,18]	RPA Results[19]
7	Lead, Total Recoverable	0.82 (DNQ)	0.90	<0.5	No
8	Mercury, Total Recoverable	0.012	0.050	0.0022	No
9	Nickel, Total Recoverable	2.2 (DNQ)	22	3.7 (DNQ)	No
11	Silver, Total Recoverable	4.8 (DNQ)	0.73	<2.9	Cannot Determine
13	Zinc, Total Recoverable	38	52	9.1 (DNQ)	No
14	Cyanide, Total Recoverable	36	5.2	<2	Yes
26	Chloroform	8.3	No Criteria	<0.084	Ud
27	Dichlorobromomethane	1.2	0.56	<0.1	Yes
39	Toluene	0.54	150	<0.11	No
77	1,4-Dichlorobenzene	0.019 (DNQ)	5	<0.081	No

4. WQBEL Calculations

Final WQBELs for cyanide and dichlorobromomethane have been determined using the methods described in section 1.4 of the SIP.

Step 1: To calculate the effluent limitations, an effluent concentration allowance (ECA) is calculated for each pollutant found to have reasonable potential using the following equation, which takes into account dilution and background concentrations:

ECA =C + D (C – B), where

C = the applicable water quality objective or criterion (adjusted for receiving water hardness and expressed as the total recoverable metal, if necessary)

D = dilution credit (here D = 0, as the discharge to Outlet Creek does not qualify for a dilution credit)

B = background concentration

Here, because no credit for dilution is allowed, the ECA is equal to the applicable criterion (ECA = C).

Step 2: For each ECA based on an aquatic life criterion/objective (here, cyanide), the long term average discharge condition (LTA) is determined by multiplying the ECA by a factor (multiplier), which adjusts the ECA to account for effluent variability. The multiplier depends on the coefficient of variation (CV) of the data set and whether it is an acute or chronic criterion/objective. Table 1 of the SIP provides pre-calculated values for the multipliers based on the values of the CV. When the data set contains less than 10 sample results (as for the Facility), or when 80 percent or more of the data set is reported

as non-detect (ND), the CV is set equal to 0.6. Derivation of the multipliers is presented in section 1.4 of the SIP.

From Table 1 of the SIP, the ECA multipliers for calculating LTAs at the 99th percentile occurrence probability are 0.321 (acute multiplier) and 0.527 (chronic multiplier). The LTAs are determined as follows in Table F-8.

Table F-8. Determination of Long Term Average

Pollutant	ECA		ECA Multiplier		LTA (µg/L)	
	Acute	Chronic	Acute	Chronic	Acute	Chronic
Cyanide, Total (as CN)	22	5.2	0.321	0.527	7.1	2.7

Step 3: WQBELs, including an average monthly effluent limitation (AMEL) and a maximum daily effluent limitation (MDEL) are calculated using the most limiting (lowest) LTA. The LTA is multiplied by a factor that accounts for averaging periods and exceedance frequencies of the effluent limitations, and for the AMEL, the effluent monitoring frequency. Here, the CV is set equal to 0.6, and the sampling frequency is set equal to 4 (n = 4). The 99th percentile occurrence probability was used to determine the MDEL multiplier and a 95th percentile occurrence probability was used to determine the AMEL multiplier. From Table 2 of the SIP, the MDEL multiplier is 3.11, and the AMEL multiplier is 1.55. Final WQBELs for cyanide are determined as follows.

Table F-9. Final WQBELs for Priority Pollutants Based on Aquatic Life Criteria

Pollutant	LTA (µg/L)	MDEL Multiplier	AMEL Multiplier	MDEL (µg/L)	AMEL (µg/L)
Cyanide, Total (as CN)	2.7	3.11	1.55	8.5	4.3

Step 4: When the most stringent water quality criterion/objective is a human health criterion/objective (as in these circumstances for dichlorobromomethane), the AMEL is set equal to the ECA. From Table 2 of the SIP, when CV = 0.6 and n = 4, the MDEL multiplier at the 99th percentile occurrence probability equals 3.11, and the AMEL multiplier at the 95th percentile occurrence probability equals 1.55. The MDEL for protection of human health is calculated by multiplying the ECA by the ratio of the MDEL multiplier to the AMEL multiplier. Final WQBELs for dichlorobromomethane are determined as follows.

Table F-10. Final WQBELs for Priority Pollutants Based on Human Health Criteria

Pollutant	ECA (µg/L)	MDEL Multiplier/AMEL Multiplier	MDEL (µg/L)	AMEL (µg/L)
Dichlorobromomethane	0.56	2.01 (3.11/1.55)	1.1	0.56

Because dichlorobromomethane is a chlorine disinfection byproduct and the Discharger intends to replace the existing chlorine disinfection process with a UV disinfection process, the effluent limitations for dichlorobromomethane will only be in effect until chlorination is no longer used as a disinfection practice at the Facility (i.e., for discharges from Discharge Point 002).

5. Whole Effluent Toxicity (WET)

Effluent limitations for acute and chronic WET protect the receiving water from the aggregate effect of a mixture of pollutants that may be present in the effluent. There are two types of WET tests – acute and chronic. An acute toxicity test is conducted over a longer period of time and may measure mortality, reproduction, and/or growth. The Basin Plan establishes a narrative water quality objective for toxicity, requiring that all waters be maintained free of toxic substances in concentrations that are lethal to, or produce other detrimental responses in aquatic organisms. Detrimental responses may include, but are not limited to, decreased growth rate, decreased reproductive success of resident or indicator species, and/or significant alterations in population, community ecology, or receiving water biota.

Order No. R1-2001-71 includes an effluent limitation for acute toxicity in accordance with the Basin Plan, which requires that the average survival of test organisms in undiluted effluent for any three consecutive 96-hour bioassay tests be at least 90 percent, with no single test having less than 70 percent survival.

In addition to the Basin Plan requirements, section 4 of the SIP states that chronic toxicity limitations are required in Orders for all discharges that will cause, have the reasonable potential to cause, or contribute to chronic toxicity in receiving waters. This Order does not establish an effluent limitation for chronic toxicity; however, chronic WET monitoring is required and limitations will be established if monitoring results demonstrate that discharges from the Facility are causing or contributing to chronic toxicity in the receiving water.

D. Final Effluent Limitations

1. Satisfaction of Anti-Backsliding Requirements

Except as provided in 40 CFR 122.44(l)(2), federal anti-backsliding regulations require effluent limitations, standards, and conditions contained in reissued permits to be at least as stringent as the effluent limitations, standards, and conditions contained in the previous permit.

New effluent limitations are established for chlorine residual. In the previous permit, the effluent limitation was expressed as no detectable levels of chlorine residual in the discharge, using a method detection limit of 0.1 mg/L. The new limitations are expressed as an average monthly limitation of 0.01 mg/L and a maximum daily limitation of 0.02 mg/L. The new limitations established in the Order are numerically lower than the minimum detection limit for the final effluent limitation of the previous permit that required no detectable level of chlorine in the effluent at the point of discharge. Although no longer expressed as “non-detect”, the newly established effluent limitations are effectively more stringent limitations because the discharge is required to achieve an effluent concentration of chlorine residual that is numerically lower than was required by the previous permit.

The condition limiting the discharge rate of treated wastewater has been relaxed from 1 percent (1:100) of the receiving water flow in Order No. R1-2001-71 to 10 percent (1:10) of the receiving water flow during the period between October 1 and May 15 each year. This relaxed condition will go into effect once the entire new WWTF is online. The construction of the new WWTF is a material and substantial alteration that justifies application of a less stringent effluent limitation (40 CFR 122.44(l)(2)(i)(A)). Because the new WWTF will provide enhanced secondary quality effluent, replacing the existing WWTF that now provides secondary quality effluent, the quality of the discharge will significantly improve, resulting in an overall improvement to existing conditions in the receiving water.

The condition limiting the discharge volume has been relaxed to accommodate up to 4.0 million gallons per day (MGD) averaged over a calendar month. Mass limitations for BOD_5 and TSS will be effectively increased as a result. The increase in mass limitations will be substantially offset by WWTF improvements resulting in enhanced secondary level treatment as described above. Monthly limitations for BOD_5 and TSS will be increased from 325 lbs/day to 334 lbs/day. These relaxed conditions will go into effect once the new mechanical WWTF is online. Both BOD_5 and TSS at increased flows up to 10 MGD were assessed in conjunction with the Exception Request and found to be protective of beneficial uses.

In addition, the Discharger has provided technical justification for a discharge rate and volume increase contained in the Exception Request, discussed in detail under section IV.C.1 of this Fact Sheet. This information was not available at the time Order No. R1-2001-71 was issued. The Exception Request documents the projected water quality that will occur once the new WWTF is online, which will constitute an overall improvement to existing conditions in the receiving water. All other effluent limitations, standards, and conditions contained in this Order are at least as stringent as the effluent limitations in Order No. R1-2001-71.

Where a permit contains a less stringent effluent limitation than in the previous permit, CWA section 402(o) requires compliance with CWA 303(d)(4). Where the water quality meets or exceeds the applicable water quality standard for that constituent, section 303(d)(4) allows the effluent limitation to be revised only if it is consistent with the anti-degradation policy. As explained below, this permit satisfies the requirements of the federal and State antidegradation policies.

2. Satisfaction of Antidegradation Policy

The permitted discharge is consistent with the antidegradation provisions of 40 CFR 131.12 and State Water Board Resolution No. 68-16. This Order provides for an increase in the volume and mass of pollutants discharged. The increase will not have significant impacts on aquatic life, which is the beneficial use most likely affected by the pollutants discharged (i.e., nutrients and cyanide). Compliance with the requirements of this Order will result in the use of best practicable treatment or control of the discharge.

The Discharger's Exception Request demonstrated compliance with the requirements of the State and federal antidegradation policies, as outlined below:

a. Existing water quality objectives and beneficial uses of Outlet Creek and the Eel River will be protected and/or not adversely affected;

b. The new WWTF is necessary to support the economic and social needs of the Willits, Meadow Brook, and Brooktrails communities and is considered to be a benefit to the people of the State;

c. The new WWTF provides a best practicable treatment method for water quality protection, and reducing and managing effluent nutrient loads into Outlet Creek;

d. The new WWTF will improve existing water quality conditions in Outlet Creek; and

e. The new WWTF discharging effluent at a 10 percent dilution ratio provides the same or better water quality protection as the existing permitted condition (i.e., one percent dilution ratio).

3. Stringency of Requirements for Individual Pollutants

This Order contains both technology-based effluent limitations and WQBELs for individual pollutants. The technology-based effluent limitations consist of restrictions on BOD_5 and TSS. Restrictions on these pollutants are discussed in sections IV.B.2 and IV.D of this Fact Sheet. This Order's technology-based pollutant restrictions implement the minimum, applicable federal technology-based requirements applicable to both the existing and new WWTFs. In addition, this Order contains effluent limitations for chlorine residual, pH, total coliform bacteria, settleable solids, total nitrogen, ammonia, cyanide, and dichlorobromomethane that are more stringent than the minimum, federal technology-based requirements but are necessary to meet water quality standards. These requirements are discussed in section IV.C.3 of this Fact Sheet.

WQBELs have been scientifically derived to implement water quality objectives that protect beneficial uses. Both the beneficial uses and the water quality objectives have been approved pursuant to federal law and are the applicable federal water quality standards. To the extent that toxic pollutant WQBELs were derived from the CTR, the CTR is the applicable standard pursuant to 40 CFR 131.38. The scientific procedures for calculating the individual WQBELs for priority pollutants are based on the CTR-SIP, which was approved by USEPA on May 18, 2000. Most beneficial uses and water quality objectives contained in the Basin Plan were approved under State law and submitted to and approved by USEPA prior to May 30, 2000. Any water quality objectives and beneficial uses submitted to USEPA prior to May 30, 2000, but not approved by USEPA before that date, are nonetheless "applicable water quality standards for purposes of the CWA" pursuant to 40 CFR 131.21(c)(1). The remaining water quality objectives and beneficial uses implemented by this Order (specifically the addition of the beneficial use of Native American Culture (CUL) and the General

Objective regarding antidegradation) were approved by USEPA on March 4, 2005, and are applicable water quality standards pursuant to 40 CFR 131.21(c)(2). Collectively, this Order's restrictions on individual pollutants are no more stringent than required to implement the requirements of the CWA.

4. Summary of Final Effluent Limitations

a. Summary of Final Effluent Limitations for the Existing WWTF – Discharge Point 001

Final effluent limitations for discharges from the existing WWTF at Discharge Point 001 are summarized below.

Table F-11. Summary of Final Effluent Limitations Existing WWTF – Discharge Point 001

Parameter	Units	Effluent Limitations					Basis[20]
		Average Monthly	Average Weekly	Maximum Daily	Instantaneous Minimum	Instantaneous Maximum	
Biochemical Oxygen demand (5-day @ 20°C)	mg/L	30	45	60	--	--	CFR
	lbs/day[11,12]	325	488	650	--	--	
Total Suspended Solids	mg/L	30	45	60	--	--	CFR
	lbs/day[11,12]	325	488	650	--	--	
pH	standard units	--	--	--	6.5	8.5	BP
Cyanide, Total (as CN)	µg/L	4.3	--	8.5	--	--	CTR
Dichlorobromomethane	µg/L	0.56	--	1.1	--	--	CTR
Chlorine, Total Residual	mg/L	0.01	--	0.02	--	--	NAWQC
Settleable Solids	ml/L	0.1	--	0.2	--	--	BP
Total Coliform Organisms	MPN/100 mL	23[21]	--	230	--	--	title 22

i. **Percent Removal.** The average monthly percent removal of BOD_5 and TSS shall not be less than 85 percent. Percent removal shall be determined from the 30-day average value influent wastewater concentration in comparison to the 30-day average value effluent concentration for the same constituent over the same time period as measured at Monitoring Locations INF-001 and EFF-001, respectively.

---

[20] CFR – Based on secondary treatment requirements established at 40 CFR Part 133.
BP – Based on water quality objectives contained in the Basin Plan.
CTR – Based on water quality criteria contained in the California Toxics Rule and applied as specified in the SIP.
NAWQC – Based on USEPA's National Ambient Water Quality Criteria for the protection of freshwater aquatic life to implement the Basin Plan's narrative toxicity objective.
Title 22 – Based on DPH Reclamation Criteria, CCR, Division 4, Chapter 3 (Title 22).

[21] The median of all samples collected in a 30-day period calculated on a continuous basis.

ii. **Discharge Rate.** During the period from October 1 through May 14, discharges of treated wastewater shall not exceed 1 percent (1:100) of the upstream receiving water flow. For purposes of this Order, the flow in Outlet Creek shall be the flow measured at the concrete flow-control structure in the creek below the confluence of Bechtel and Broaddus Creeks.

iii. **Acute Toxicity.** There shall be no acute toxicity in treated wastewater discharged to the Eel River and its tributaries. The Discharger will be considered compliant with this limitation when the survival of aquatic organisms in a 96-hour bioassay of undiluted effluent complies with the following:

(a) Minimum for any one bioassay: 70 percent survival; and

(b) Median for any three or more consecutive bioassays: at least 90 percent survival.

b. Summary of Final Effluent Limitations for the New WWTF – Discharge Point 002

Final effluent limitations for the new WWTF at Discharge Point 002 are summarized below.

Table F-12. Summary of Final Effluent Limitations New WWTF – Discharge Point 002

Parameter	Units	Effluent Limitations					
		Average Monthly	Average Weekly	Maximum Daily	Instantaneous Minimum	Instantaneous Maximum	Basis[22]
Biochemical Oxygen demand (5-day @ 20°C)	mg/L	10	15	--	--	--	TT
	lbs/day[11,15]	334	500	--	--	--	
Total Suspended Solids	mg/L	10	15	--	--	--	TT
	lbs/day[11,15]	334	500	--	--	--	
pH	standard units	--	--	--	6.5	8.5	BP
Nitrogen, Total (as N)	mg/L	10.0	--	--	--	--	TT

[22] TT – Based on treatment capability of the new WWTF.
BP – Based on water quality objectives contained in the Basin Plan.
NAWQC – Based on USEPA's National Ambient Water Quality Criteria for the protection of freshwater aquatic life to implement the Basin Plan's narrative toxicity objective.
CTR – Based on water quality criteria contained in the California Toxics Rule and applied as specified in the SIP.
MCL – Based on the Primary Maximum Contaminant Level.
Title 22 – Based on DPH Reclamation Criteria, CCR, Division 4, Chapter 3 (Title 22).

Table F-12. Summary of Final Effluent Limitations New WWTF – Discharge Point 002

Parameter	Units	Effluent Limitations					
		Average Monthly	Average Weekly	Maximum Daily	Instantaneous Minimum	Instantaneous Maximum	Basis[22]
Total Coliform Organisms[23]	MPN/100 mL	23[24]	230	--	--	--	title 22

c. Summary of Final Effluent Limitations for the New WWTF – Discharge Point 003

Final effluent limitations for the new WWTF at Discharge Point 003 are summarized below.

Table F-13. Summary of Final Effluent Limitations New WWTF – Discharge Point 003[25]

Parameter	Units	Effluent Limitations					
		Average Monthly	Average Weekly	Maximum Daily	Instantaneous Minimum	Instantaneous Maximum	Basis[26]
pH	standard units	--	--	--	6.5	8.5	BP
Cyanide, Total (as CN)	µg/L	4.3	--	8.5	--	--	CTR

---

23 Compliance with this parameter shall apply at all times. During periods of discharge at Discharge Point 003, compliance shall be applied in accordance with surface water criteria. At all other times, including during periods of discharge from Discharge Point 004, compliance shall be evaluated in light of groundwater criteria.

24 The median of all samples collected in a 30-day period. Compliance with the 30-day median shall be calculated based upon a continuous basis.

25 Once the new mechanical treatment facility is operational, sampling and analysis for compliance with EFF-003 monitoring requirements and Discharge Point 003 effluent limitations for all constituents other than nitrogen compounds shall be conducted at EFF-002 until September 30, 2012.

26 TT – Based on treatment capability of the new WWTF.
BP – Based on water quality objectives contained in the Basin Plan.
NAWQC – Based on USEPA's National Ambient Water Quality Criteria for the protection of freshwater aquatic life to implement the Basin Plan's narrative toxicity objective.
CTR – Based on water quality criteria contained in the California Toxics Rule and applied as specified in the SIP.
MCL – Based on the Primary Maximum Contaminant Level.
Title 22 – Based on DPH Reclamation Criteria, CCR, Division 4, Chapter 3 (Title 22).

Table F-13. Summary of Final Effluent Limitations New WWTF – Discharge Point 003[25]

Parameter	Units	Effluent Limitations					
		Average Monthly	Average Weekly	Maximum Daily	Instantaneous Minimum	Instantaneous Maximum	Basis[26]
Ammonia Nitrogen, (as N)	mg/L	[27]	--	[23]	--	--	NAWQC
Nitrogen, Total (as N)	mg/L	1.6[28]	--	--	--	--	BP/TT
Nitrogen, Total (as N)	mg/L	6.0	--	--	--	--	BP/TT
Settleable Solids	ml/L	0.1	--	0.2	--	--	BP

i. Percent Removal. The average monthly percent removal of BOD_5 and TSS shall not be less than 85 percent. Percent removal shall be determined from the 30-day average value influent wastewater concentration in comparison to the 30-day average value effluent concentration for the same constituent over the same time period as measured at Monitoring Locations INF-001 and EFF-002, respectively.

ii. Discharge Rate. During the period from October 1 through May 14, discharges of treated wastewater shall not exceed 10 percent (1:10) of the upstream receiving water flow. For purposes of this Order, the flow in Outlet Creek shall be the flow measured at the concrete flow-control structure in the creek below the confluence of Bechtel and Broaddus Creeks

iii. Acute Toxicity. There shall be no acute toxicity in treated wastewater discharged to the Eel River and its tributaries. The Discharger will be considered compliant with this limitation when the survival of aquatic organisms in a 96-hour bioassay of undiluted effluent complies with the following:

(a) Minimum for any one bioassay: 70 percent survival; and

(b) Median for any three or more consecutive bioassays: at least 90 percent survival.

---

[27] Average monthly effluent limitations (AMELs) for ammonia are determined based on the pH and temperature of the receiving water at the time the discharge is sampled. Maximum daily effluent limitations (MDELs) for ammonia are determined based on the pH of the receiving water at the time the discharge is sampled, and the presence/absence of salmonids. See Attachments G and H for full tables of effluent limitations for ammonia.

[28] This effluent limitation applies only under critical conditions which occur when receiving water in Outlet Creek is either greater than 15°C or flowing at less than 2.4 cubic feet per second (cfs). At all other times, the total nitrogen effluent limitations for Discharge Point 003 shall be 6.0 mg/L.

E. Interim Effluent Limitations

No interim effluent limitations are established in this Order as the Discharger has not requested interim effluent limitations. In addition, interim limitations for CTR constituents may no longer be included in NPDES permits after May 18, 2010.

F. Land Discharge Specifications

This section is not applicable to the Discharger as treated wastewater is not discharged to or applied to land for the purpose of disposal. The Discharger will reclaim treated wastewater as it develops its recycled water distribution system, thus the Discharger has Reclamation Specifications rather than Land Discharge Specifications.

G. Reclamation Specifications

1. Scope and Authority

Section 13263 of the Water Code requires the Regional Water Board to prescribe requirements for proposed discharges, existing discharges, or material change in an existing discharge based upon the conditions of the disposal area or receiving waters upon or into which the discharge is made or proposed. The prescribed requirements shall implement any relevant water quality control plans that have been adopted, and shall take into consideration the beneficial uses to be protected, the water quality objectives reasonably required for that purpose, other waste discharges, the need to prevent nuisance, and the provisions of Water Code section 13241. In prescribing requirements, the Regional Water Board is not obligated to authorize the full waste assimilation capacities of the receiving water.

Water Code section 13241 requires the Regional Board to establish water quality objectives in water quality control plans as in its judgment will ensure the reasonable protection of beneficial uses and prevention of nuisance, recognizing that it may be possible for the quality of water to be changed to some degree without unreasonably affecting beneficial uses. The Basin Plan establishes water quality objectives specific to the North Coast Region for the protection of past, present, and probable future beneficial uses of water. Factors required for consideration during development of applicable water quality objectives, such as the characteristics of the hydrographic unit under consideration, economic considerations, and other factors required in accordance with section 13241 were considered during the Basin Planning and adoption process.

The discharge of treated wastewater from the enhancement wetland will fluctuate from surface water to reclamation at varying times of the year. Therefore, limitations for BOD_5, TSS were derived based upon the treatment capability of the new WWTF in order to implement water quality objectives that protect beneficial uses of both surface and groundwater. Both beneficial uses and the water quality objectives have been approved pursuant to state law, and then submitted to and approved by USEPA. In addition,

discharge prohibitions were included to prohibit the reclamation use of untreated or partially treated waste, in order to prevent nuisance.

The Regional Water Board considered the factors set forth in Water Code section 13241, including the consideration of past, present, and probable future beneficial uses of the receiving water, which the Regional Water Board anticipates to be the same as set forth in the Basin Plan. The Regional Water Board considered the environmental characteristics, including water quality, of the Outlet Creek Hydrologic Subarea of the Eel River Hydrologic unit, the coordinated control of all factors which affect water quality in the area, and the need to develop and use recycled water, which this Order supports. The Discharger did not submit any evidence regarding whether the waste discharge requirements for reclamation discharges would interfere with the development of needed housing within the region or the costs of compliance, particularly anything to show that the costs of compliance with the Order would be unmanageable.

2. Applicable Beneficial Uses and Water Quality Criteria and Objectives

a. **Beneficial Uses.** Beneficial use designations for groundwater established in the Basin Plan include MUN, AGR, IND, PRO, AQUA, and CUL.

b. **Basin Plan Water Quality Objectives.** The Basin Plan contains narrative objectives for tastes and odors, bacteria, radioactivity, and chemical constituents (including those chemicals that adversely affect agricultural water supply) that apply to groundwater.

3. Determining the Need for WQBELs and Technology-Based Limits for Reclamation

a. **BOD_5 and TSS.** This Order establishes discharge limitations for BOD_5 and TSS based on technology-based effluent limitations that consist of a monthly average of 10 mg/L and a weekly average of 15 mg/L. These levels are technically achievable based on the capability of the enhanced secondary treatment system. These limits are included in the Order to ensure that discharges to the reclamation system, receive proper treatment.

b. **pH.** The Order establishes a reclamation discharge specification for pH of 6.0 to 9.0 based on technology-based effluent limitations required by USEPA pursuant to 40 CFR Part 133. These pH limits are included in the Order to ensure that pH levels are appropriate for protection of groundwater when discharging to reclamation sites.

c. **Discharge Rate.** Discharge specifications and effluent limitations have been established for recycled water in the Order based upon the maintenance of separation between treated effluent and groundwater. Should recycled water be applied at rates which exceed the agronomic demand of the crops being irrigated, pollutants may reach groundwater and have the potential to impact beneficial uses

thereof. The discharge rate for recycled water is limited to agronomic rates for the protection of groundwater beneficial uses.

d. **Coliform Bacteria.** Coliform bacteria are a pollutant of concern in all wastewaters of domestic origin, and therefore, the Order retains effluent limitations for total coliform bacteria from Order No. R1-2001-71. These effluent limitations will ensure that water quality objectives for bacteria, as established by Chapter 3 of the Basin Plan, will be maintained. The specific limitations are based on requirements established by California Department of Public Health (CDPH) at title 22, Cal. Code of Regs, Division 4, Chapter 3 (Water Recycling Criteria, and are those levels of bacteria required for the reclamation use of treated wastewater for surface irrigation of (i) pasture used for animals producing milk for human consumption and (ii) any nonedible vegetation where access is controlled. These limitations are imposed at Discharge Point 002.

e. **Chemical Constituents.** Basin Plan requires that waters designated for use as MUN shall not contain concentrations of chemical constituents in excess of the limits specified in California Code of Regulations, title 22, Chapter 15, Division 4, Article 4, Section 64435 (Tables 2 and 3), and Section 64444.5 (Table 5), and listed in Table 3-2 of the Basin Plan. Historic sampling and analyses have not shown reasonable potential for exceedances of chemical constituents other than nitrate regulated in accordance with title 22 MCLs. Therefore discharge specifications for these chemical parameters are not required by this Order.

f. **Nitrate.** Nitrate is known to cause adverse health effects in humans. For waters designated as domestic or municipal supply, the Basin Plan (Chapter 3) adopts the MCLs, established by the CDPH for the protection of public water supplies at title 22 of the California Code of Regulations, section 64431 (Inorganic Chemicals) and 64444 (Organic Chemicals), as applicable water quality criteria. The MCL for nitrate (10 mg/L N) is therefore applicable as a water quality criterion. In order to support the Exception Request, this Order establishes effluent limitations discharged into the enhancement wetland (Discharge Point 002) for total nitrogen at 8.0 mg/L which will serve for the protection of human health for any unintended leaching of nitrogen through the clay liner of the wetland. Therefore, an individual limitation for nitrate has not been established. .

3. Satisfaction of Antidegradation Policy

The permitted discharge is consistent with the antidegradation provisions of State Water Board Resolution No. 68-16. This Order provides for an increase in the volume and mass of pollutants discharged. The increase will not have significant impacts on the beneficial uses of groundwater because the Order does not authorize the discharge of treated wastewater to groundwater. The Discharger is limited to application of recycled water at agronomic rates. The exact application rates necessary to achieve agronomic application of recycled water will be derived through the special study required in accordance with section VI.C of the Order.

4. Summary of Final Effluent Limitations for the New WWTF – Discharge Point 004

Final effluent limitations for the new WWTF at Discharge Point 004 based on treatment capability of the new WWTF and title 22 are summarized below.

i. The Discharger shall comply with applicable state and local requirements regarding the production and use of reclaimed wastewater, including requirements of California Water Code (Water Code) sections 13500 – 13577 (Water Reclamation) and Department of Health Services (DHS) regulations at title 22, sections 60301 – 60357 of the Cal. Code of Regs (Water Recycling Criteria).

ii. The Discharger shall comply with the specific requirements contained in Reclamation Requirements and Provisions - Attachment H of this Order.

iii. Discharge Rate. During the period from May 15 through September 30 and all other times seasonally appropriate, discharges of treated wastewater shall not exceed the agronomic requirements of the crops being irrigated. .

H. Other Requirements

The Order contains additional specifications that apply to the new WWTF regardless of the disposal method (surface water discharge, storage, or reclamation).

Ultraviolet Disinfection Process Requirements. The Order also contains new monitoring requirements for the UV disinfection system. These requirements are needed to determine compliance with requirements for recycled wastewater systems, established at CCR title 22, division 4, chapter 3 and to ensure that the disinfection process achieves effective pathogen reduction.

UV system operation requirements are necessary to ensure that adequate UV dosage is applied to the wastewater to inactivate pathogens (e.g. viruses) in the wastewater. UV dosage is dependent on several factors such as UV transmittance, UV power setting, and wastewater flow through the UV System. Minimum dosage requirements are based on recommendations by the CDPH and guidelines established by the National Water Research Institute (NWRI) and American Water Works Association Research Foundation's (NWRI/AWWARF) "Ultraviolet Disinfection Guidelines for Drinking Water and Water Reuse" first published in December 2000 revised as a Second Edition dated May 2003. Furthermore, a Memorandum dated November 1, 2004 issued by CDPH to Regional Water Board Executive Officers recommended that provisions be included in permits for water recycling treatment plants employing UV disinfection requiring dischargers to establish fixed cleaning frequency of quartz sleeves as well as include provisions that specify minimum delivered UV dose that must be maintained (as recommended by the NWRI/AWWARF UV Disinfection Guidelines). Minimum UV dosage requirements specified in Effluent Limitations and Discharge Specifications Section IV.D.2 ensures that adequate disinfection of wastewater will be achieved.

V. RATIONALE FOR RECEIVING WATER LIMITATIONS

A. Surface Water

CWA section 303(a-c) requires states to adopt water quality standards, including criteria where they are necessary to protect beneficial uses. The Regional Water Board adopted water quality criteria as water quality objectives in the Basin Plan. The Basin Plan states that "[t]*he numerical and narrative water quality objectives define the least stringent standards that the Regional* [Water] *Board will apply to regional waters in order to protect the beneficial uses.*" The Basin Plan includes numeric and narrative water quality objectives for various beneficial uses and water bodies. This Order contains receiving water limitations based on the Basin Plan numerical and narrative water quality objectives for biostimulatory substances, bacteria, chemical constituents, color, dissolved oxygen, floating material, oil and grease, pH, pesticides, radioactivity, sediment, settleable material, suspended material, tastes and odors, temperature, toxicity, and turbidity.

B. Groundwater

The beneficial uses of the underlying ground water are municipal and domestic supply, industrial service supply, industrial process supply, agricultural supply, and aquaculture, and Native American cultural uses. Groundwater limitations are required to protect the beneficial uses of the underlying groundwater.

State Water Board Resolution No. 68-16, requires, in part, that whenever the existing quality of water is better than the quality established in policies as of the date on which such policies become effective, such existing high quality water will be maintained until it is demonstrated to the state that any changes will be consistent with maximum benefit to the people of the state, will not unreasonably affect beneficial uses of such water, and will not result in water quality less than prescribed in the policies.

VI. RATIONALE FOR MONITORING AND REPORTING REQUIREMENTS

40 CFR 122.48 requires that all NPDES permits specify requirements for recording and reporting monitoring results. Water Code sections 13267 and 13383 authorizes the Regional Water Board to require technical and monitoring reports. The Monitoring and Reporting Program (MRP), Attachment E of this Order, establishes monitoring and reporting requirements to implement federal and state requirements. The following provides the rationale for the monitoring and reporting requirements contained in the MRP for the Facility.

A. Influent Monitoring

1. Influent monitoring requirements for BOD_5 and TSS are retained from Order No. R1-2001-71 and are necessary to determine compliance with the Order's percent removal requirements for these parameters.

2. Influent flow monitoring has been established to characterize flows to the WWTF. The Discharger currently measures influent flows to the Facility using a Parshall flume, accessible through a manhole located west of the new headworks building.

B. Effluent Monitoring

1. Pursuant to the requirements of 40 CFR 122.44(i)(2) effluent monitoring is required for all constituents with effluent limitations. Effluent monitoring is necessary to assess compliance with effluent limitations, assess the effectiveness of the treatment process, and to assess the potential for impacts of the discharge to the receiving stream and groundwater.

2. As described in section II.A of this Fact Sheet, the Discharger is planning to upgrade and expand the WWTF during the term of this Order. This Order establishes monitoring requirements for the discharge from the existing WWTF (Monitoring Location EFF-001), from the new WWTF downstream of the disinfection processes and prior to discharge to the treatment wetland (Monitoring Location EFF-002), from the treatment wetland and before contact with the receiving water (Monitoring Location EFF-003) and from the treatment wetland prior to reclamation(Monitoring Location EFF-004). Monitoring of effluent is required to 1) determine compliance with technology-based effluent limitations, 2) determine compliance with WQBELs, and 3) characterize the fully treated effluent.

3. This Order retains weekly effluent monitoring requirements for BOD_5 and TSS from Order No. R1-2001-71 to determine compliance with the applicable technology-based effluent limitations at Monitoring Locations EFF-001 and EFF-003.

4. This Order retains weekly effluent monitoring requirements for settleable solids, total coliform organisms, and pH from Order No. R1-2001-71 to determine compliance with the applicable WQBELs at Monitoring Locations EFF-001 and EFF-003.

5. This Order retains daily effluent monitoring requirements for chlorine residual from Order No. R1-2001-71 for the discharge from the existing WWTF at Monitoring Location EFF-001 to determine compliance with effluent limitations. As the Discharger is planning to replace the existing chlorine disinfection system with a new UV disinfection system, monitoring requirements for chlorine residual are not required for the discharge from the new WWTF.

6. Continuous flow monitoring has been retained from Order No. R1-2001-71 at Monitoring Locations EFF-001 and EFF-002 at the end of mechanical treatment. Continuous flow monitoring is also required at Monitoring Locations EFF-003 and EFF-004. Continuous flow monitoring will be used to characterize effluent flows for the calculation of mass to determine compliance with mass-based effluent limitations for BOD_5 and TSS, calculations for discharge rates into surface water, and to calculate mass for determination of reclamation agronomic rates.

7. Monitoring data collected over the term of Order No. R1-2001-71 for cyanide indicates reasonable potential to exceed water quality criteria. Therefore, monthly effluent monitoring for cyanide has been established at Monitoring Location EFF-001 and EFF-003 to determine compliance with the applicable WQBELs.

8. Monitoring data collected over the term of Order No. R1-2001-71 for dichlorobromomethane indicates reasonable potential to exceed water quality criteria. Dichlorobromomethane is a chlorine disinfection byproduct and is not expected to be present in the effluent upon replacement of the chlorine disinfection system with the new UV disinfection system. Therefore, monitoring for dichlorobromomethane is only required for the discharge from the existing WWTF at EFF- 001 to determine compliance with effluent limitations.

9. The Regional Water Board is increasingly concerned about the biostimulatory properties of discharges to surface waters in the North Coast Region. Biostimulatory pollutants, such as nitrogen and phosphorus containing compounds, are a common component of domestic wastewater. Due to these concerns, this Order establishes monitoring requirements for ammonia, nitrate, nitrite, organic nitrogen, total nitrogen, and phosphorus for the discharge from the existing WWTF at Monitoring Location EFF-001. Because wastewater in the treatment wetland may slowly leach to groundwater, this Order requires compliance with effluent limitations for total nitrogen from the new mechanical secondary treatment system at Monitoring Location EFF-002. In order to support the Discharger's Exception Request, this Order establishes effluent limitations for ammonia, and total nitrogen to protect the receiving water when discharging at a 1:10 dilution ratio. This Order requires monitoring for ammonia and total nitrogen in the effluent from the treatment wetland into Outlet Creek at Monitoring Location EFF-003. Monitoring for phosphorus is also required at Monitoring Location EFF-003 to determine levels of phosphorus discharged to the receiving water.

10. Effluent monitoring at Monitoring Locations EFF-001 and EFF-003 for temperature is established in this Order to determine compliance with the floating effluent limitations for ammonia, which are based on pH and temperature.

11. Priority pollutant data for the effluent from the existing WWTF has been provided by the Discharger over the term of Order No. R1-2001-71, and was used to conduct an RPA. In accordance with Section 1.3 of the SIP, periodic monitoring is required for priority pollutants for which criteria or objectives apply and for which no effluent limitations have been established. This Order establishes annual monitoring for priority pollutants in the effluent from the new WWTF at Monitoring Location EFF-003, which will allow for the characterization of the effluent subsequent to the proposed upgrades. Effluent monitoring for hardness has been established at Monitoring Location EFF-003 to adjust water quality criteria for hardness-based metals.

C. Whole Effluent Toxicity Testing Requirements

1. Acute Toxicity

a. **Rationale.** 96-hour bioassay testing is required to demonstrate compliance with the effluent limitation for acute toxicity (Effluent Limitations IV.A.1.e and IV.B.1.e).

b. **Test Frequency.** The MRP increases the monitoring frequency from quarterly to twice annually during the discharge season. Because the discharge to surface water is seasonally limited, this monitoring frequency is considered equivalent to USEPA's recommendation for monthly WET testing for facilities listed as "major facilities" and quarterly testing for "minor facilities." (*Regions 9 & 10 Guidance for Implementing Whole Effluent Toxicity Testing Programs,* USEPA, 1996).

c. **Sample Location.** Representative effluent samples shall be collected at Monitoring Location EFF-001 when discharging at Discharge Point 001 and at Monitoring Location EFF-003 when discharging at Discharge Point 003.

d. **Sample Type.** This Order specifies a 96-hour static renewal or static non-renewal test as described in *Methods for Measuring the Acute Toxicity of Effluents and Receiving Waters to Freshwater and Marine Organisms* (USEPA Report No. EPA-821-R-02-012, 5th edition or subsequent editions). Upon request, other methods may be approved by the Regional Water Board's Executive Officer.

e. **Test Species.** This Order requires the Discharger to conduct acute toxicity tests with the water flea, *Ceriodaphnia dubia*, and the rainbow trout, *Oncorhynchus mykiss*, for at least two suites of tests. For the first two suites of acute toxicity tests, the Discharger will determine the most sensitive aquatic species and continue to monitor with the most sensitive species. At least once every 5 years, the Discharger will rescreen to reconfirm the most sensitive species for the acute toxicity test.

f. **Test Method.** The presence of acute toxicity shall be estimated as specified in effluent limitations IV.A.1.e and IV.B.1.e of the Order and shall be consistent with *Methods for Measuring the Acute Toxicity of Effluents and Receiving Waters to Freshwater and Marine Organisms* (USEPA Report No. EPA-821-R-02-012, 5th edition or subsequent editions). Upon request, other methods may be approved by the Regional Water Board Executive Officer.

g. **Dilution Water.** Acute toxicity tests shall be conducted using undiluted effluent.

h. **Test Failure.** If an acute toxicity test does not meet all test acceptability criteria, as specified in the test method, the Discharger shall re-sample and re-test as soon as possible, not to exceed 7 days following notification of test failure.

i. **Accelerated Monitoring.** This provision requires accelerated acute toxicity testing when routine acute toxicity test results exceed the single sample effluent limitation (70

percent survival). The purpose of accelerated monitoring is to determine, in an expedient manner, whether there is a pattern of toxicity before requiring the implementation of a TRE. Under this provision, the Discharger is required to conduct testing on at least two additional samples, one within 14 days, and one within 21 days of receiving the initial sample result. If any of the additional samples do not comply with the three sample median minimum limitation (90 percent survival) using that sample result and the two previous sample results, the Discharger shall initiate a TRE. If any test of a sample is ruled invalid, the Discharger will re-sample within 7 days following notification of test invalidation.

j. **Notification and Reporting.** The MRP includes notification requirements regarding test results that exceed the acute toxicity effluent limitation and require reporting of WET test results in accordance with the acute toxicity manual Chapter 12 (Report Preparation) or in an equivalent format.

2. **Chronic Toxicity**

a. **Rationale.** Chronic WET testing is required two times per year, during the discharge season, in order to demonstrate compliance with the Basin Plan's narrative toxicity objective.

b. **Test Frequency.** USEPA has no fixed guidance on the establishment of monitoring frequency, but recommends monthly WET testing for facilities listed as "major facilities" and quarterly testing for "minor facilities" during the first year of WET testing in order to develop sufficient data to conduct an RPA. USEPA further recommends that a reduction in sampling frequency is appropriate if no individual toxicity test exceeds the WET limit or trigger. Chronic WET testing results submitted with the report of waste discharge and conducted in June and November 2009 did not show toxicity in the effluent. Therefore, this Order requires chronic WET testing two times per year, consistent with Order No. R1-2001-71.

c. **Sample Location.** Representative effluent samples shall be collected at Monitoring Location EFF-001 when discharging at Discharge Point 001 and at Monitoring Location EFF-003 when discharging at Discharge Point 003.

d. **Sample Type.** The Discharger shall collect 24-hour composite samples of effluent discharged from Discharge Point 001 and Discharge Point 003 for critical life stage toxicity testing as indicated in this Order.

e. **Test Species.** This Order requires the Discharger to conduct short-term tests with the water flea, *Ceriodaphnia dubia* (survival and reproduction test), the fathead minnow, *Pimephales promelas* (larval survival and growth test), and the green alga, *Selenastrum capricornutum* (growth test). Initially, the Discharger is required to determine the most sensitive test species and monitor the discharge for chronic toxicity using that species for no more than 5 years, whereupon, the Discharger will repeat the screening procedure to confirm the most sensitive species. If reasonable

potential to exceed the narrative water quality objective is found to exist, the Permit may be reopened to include a chronic toxicity limitation, as appropriate. The Basin Plan does not allow a mixing zone for this discharge; therefore, reasonable potential will be based on results of chronic toxicity tests from samples collected at the end of the pipe.

f. Test Method. The presence of chronic toxicity shall be estimated as specified in and shall be consistent with *Short-Term Methods for Estimating the Chronic Toxicity of Effluents and Receiving Waters to Freshwater Organisms* (USEPA Report No. EPA-821-R-02-013, 4th Edition or subsequent editions).

g. Dilution Water. Control and dilution water should be receiving water at a location immediately upstream and outside the influence of the outfall for all test methods except the short-term chronic *Selenastrum capricornutum* test. For the *Selenastrum capricornutum* test method, synthetic laboratory water with a hardness similar to the receiving water shall be used as a control and diluent. Laboratory water may be substituted for receiving water, as described in the manual, upon approval by the Regional Water Board Executive Officer.

h. Accelerated Monitoring. Guidance regarding accelerated monitoring and TRE initiation is provided in the *Technical Support Document for Water Quality-Based Toxics Control*, EPA/505/2-90-001, March 1991 (TSD). The TSD at page 118 states, "*EPA recommends if toxicity is repeatedly or periodically present at levels above effluent limits more than 20 percent of the time, a TRE should be required*." If there is adequate evidence of a pattern of effluent toxicity (i.e., toxicity present exceeding the monitoring trigger 20 percent of the time), the Regional Water Board's Executive Officer will require the Discharger to initiate a TRE. The TRE will include follow-up monitoring requirements to assure toxicity has been mitigated. Due to possible seasonality of the toxicity, the accelerated monitoring should be performed in a timely manner, preferably taking no more than 2 to 3 months to complete.

i. Monitoring Trigger. A numeric chronic toxicity monitoring trigger of 1.0 TUc (where TUc = 100/NOEC) is established by the Order, because this Order does not allow any dilution for the chronic condition. Therefore, a TRE is triggered when the effluent exhibits a pattern of toxicity at 100 percent effluent.

D. Receiving Water Monitoring

1. Surface Water

a. Receiving water monitoring requirements are necessary to determine compliance with prohibitions, effluent limitations, and receiving water limitations established by the Order. Order No. R1-2001-71 required effluent monitoring for pH and dissolved oxygen upstream and downstream of the discharge. This Order defines the upstream monitoring location as Monitoring Location RSW-001 which shall be located in Outlet Creek upstream of Discharge Point 001. Monitoring is also required at the point of

discharge for Discharge Points 001 and 003 at Monitoring Locations RSW-002 and RSW-003. Monitoring at Monitoring Location RSW-002 may be discontinued upon commencement of discharges from Discharge Point 003. Additional downstream monitoring is established at Monitoring Location RSW-004, which shall be located downstream of Discharge Point 003.

b. This Order retains monthly monitoring from Order No. R1-2007-71 for pH and dissolved oxygen at Monitoring Locations RSW-001, RSW-002, RSW-003, and RSW-004.

c. Upstream receiving water monitoring requirements for flow, ammonia, nitrate, nitrite, total nitrogen, organinic nitrogen, dissolved oxygen, electrical conductivity, hardness, phosphorus, temperature, turbidity, and visual observations are established at Monitoring Location RSW-001 to assess background receiving water quality. Annual monitoring for priority pollutants upstream at Monitoring Location RSW-001 is required to collect the necessary data to determine reasonable potential as required in section 1.2 of the SIP. The hardness (as $CaCO_3$) of the upstream receiving water shall also be monitored concurrently with the priority pollutants as well as pH to ensure the water quality criteria/objectives are correctly adjusted for the receiving water when determining reasonable potential as specified in section 1.3 of the SIP.

d. Monitoring requirements for pH, dissolved oxygen, electrical conductivity, temperature, turbidity, and visual observations are required at Monitoring Locations RSW-002, RSW-003, and RSW-004 to assess receiving water quality at the point of discharge and in downstream receiving water to confirm assumptions of beneficial use protection presented in the Discharger's Exception Request.

2. Groundwater

No groundwater monitoring is required by the MRP as the Order does not permit discharges to this receiving water from the reclamation system.

E. Other Monitoring Requirements

1. **Monitoring Location INT-001.** Until the UV disinfection system is inline, the MRP requires internal monitoring in the chlorine contact chamber for chlorine residual at the existing WWTF to ensure that the effluent is adequately disinfected prior to discharge to Outlet Creek.

2. **Septage Monitoring Requirements.** The Discharger currently accepts and treats septage at the WWTF. This Order establishes monitoring requirements to characterize discharges of septage into the treatment system and to ensure that pollutants associated with domestic septage do not pass through or interfere with the operation or performance of the WWTF.

3. **Disinfection Process Monitoring for UV Disinfection System.** This Order establishes operations monitoring for the UV disinfection system. These monitoring requirements are established to document proper operations and maintenance of the disinfection system for the new WWTF. This monitoring is intended to ensure adherence to proper standards for UV light dosage are implemented, adequate disinfection occurs, and maintain required bacterial monitoring at a weekly frequency.

VII. RATIONALE FOR PROVISIONS

A. Standard Provisions

Standard Provisions, which apply to all NPDES permits in accordance with 40 CFR 122.41, and additional conditions applicable to specified categories of permits in accordance with 40 CFR 122.42, are provided in Attachment D. The Discharger must comply with all standard provisions and with those additional conditions that are applicable under 40 CFR 122.42.

40 CFR 122.41(a)(1) and (b) through (n) establish conditions that apply to all State-issued NPDES permits. These conditions must be incorporated into the permits either expressly or by reference. If incorporated by reference, a specific citation to the regulations must be included in the Order. 40 CFR 123.25(a)(12) allows the state to omit or modify conditions to impose more stringent requirements. In accordance with 40 CFR 123.25, this Order omits federal conditions that address enforcement authority specified in 40 CFR 122.41(j)(5) and (k)(2) because the enforcement authority under the Water Code is more stringent. In lieu of these conditions, this Order incorporates by reference Water Code section 13387(e).

B. Regional Water Board Standard Provisions

In addition to the Federal Standard Provisions (Attachment D), the Discharger must comply with the Regional Water Board Standard Provisions provided in Standard Provisions VI.A.2.

1. Order Provision VI.A.2.a identifies the State's enforcement authority under the Water Code, which is more stringent than the enforcement authority specified in the federal regulations (e.g., 40 CFR 122.41(j)(5) and (k)(2)).

2. Order Provision VI.A.2.b requires the Discharger to notify Regional Water Board staff, orally and in writing, in the event that the Discharger does not comply or will be unable to comply with any Order requirement. The Provision requires the Discharger to make direct contact with a Regional Water Board staff person.

3. Order Provision VI.A.2.c requires the Discharger to petition with, and receive approval from, the State Water Board Division of Water Rights prior to making any change in the point of discharge, place of use, or purpose of use of treated wastewater that results in a decrease of flow in any portion of a watercourse. This requirement is mandated by Water Code section 1211.

4. Order Provision VI.A.2.c requires the Discharger to submit design proposals for new wastewater storage ponds to the Regional Water Board Executive Officer for review prior to construction. Construction plans must demonstrate that the pond design will ensure protection of groundwater beneficial uses and complies with the Water Code and title 27 of the California Code of Regulations.

C. Special Provisions

1. Reopener Provisions

a. **Standards Revisions (Special Provisions VI.C.1.a).** Conditions that necessitate a major modification of a permit are described in 40 CFR 122.62, which include the following:

   i. When standards or regulations on which the permit was based have been changed by promulgation of amended standards or regulations or by judicial decision. Therefore, if revisions of applicable water quality standards are promulgated or approved pursuant to section 303 of the CWA or amendments thereto, the Regional Water Board will revise and modify this Order in accordance with such revised standards.

   ii. When new information, that was not available at the time of permit issuance, would have justified different permit conditions at the time of issuance.

b. **Reasonable Potential (Special Provisions VI.C.1.b).** This provision allows the Regional Water Board to modify, or revoke and reissue, this Order if present or future investigations demonstrate that the Discharger governed by this Permit is causing or contributing to excursions above any applicable priority pollutant criterion or objective or adversely impacting water quality and/or the beneficial uses of receiving waters.

c. **Whole Effluent Toxicity (Special Provisions VI.C.1.c).** This Order requires the Discharger to investigate the causes of, and identify corrective actions to reduce or eliminate effluent toxicity through a TRE. This Order may be reopened to include a numeric chronic toxicity limitation, a new acute toxicity limitation, and/or a limitation for a specific toxicant identified in the TRE. Additionally, if a numeric chronic toxicity water quality objective is adopted by the State Water Board, this Order may be reopened to include a numeric chronic toxicity limitation based on that objective.

d. **303(d)-Listed Pollutants (Special Provisions VI.C.1.d).** This provision allows the Regional Water Board to reopen this Order to modify existing effluent limitations or add effluent limitations for pollutant(s) that are the subject of any future TMDL action.

e. **Special Studies (Special Provisions VI.C.1.e).** The Discharger may elect to study the feasibility of the use of water effect ratios and/or mixing zones to meet water quality objectives and effluent limitations for toxic pollutants. If these or other future water quality studies such as the required reclamation / recycled water evaluation

provide new information and a basis for determining that a permit condition or conditions should be modified, the Regional Water Board may reopen this Order and make appropriate modifications to this Order.

f. **Nutrients (Special Provisions VI.C.1.f).** This reopener allows the Regional Water Board to reopen and modify the Order to include new or modified effluent limitations for nutrients if monitoring data indicates the need for more stringent effluent limitations for ammonia, nitrate, and total nitrogen or new effluent limitations for other nutrient parameters.

2. **Special Studies and Additional Monitoring Requirements**

a. **Toxicity Reduction Evaluations (Special Provision VI.C.2.a).** The SIP requires the use of short-term chronic toxicity tests to determine compliance with the narrative toxicity objectives for aquatic life in the Basin Plan. Attachment E of this Order requires chronic toxicity monitoring for demonstration of compliance with the narrative toxicity objective.

In addition to WET monitoring, Special Provisions VI.C.2.a.ii requires the Discharger to submit to the Regional Water Board a TRE Work Plan for approval by the Executive Officer, to ensure the Discharger has a plan to immediately move forward with the initial tiers of a TRE, in the event effluent toxicity is encountered in the future. The TRE is initiated by evidence of a pattern of toxicity demonstrated through the additional effluent monitoring provided as a result of an accelerated monitoring program.

b. **TRE Guidance.** The Discharger is required to prepare a TRE Work Plan in accordance with USEPA guidance. Numerous guidance documents are available, as identified below:

i. *Toxicity Reduction Evaluation Guidance for Municipal Wastewater Treatment Plants* (EPA/833B-99/002), August 1999.

ii. *Generalized Methodology for Conducting Industrial TREs* (EPA/600/2-88/070), April 1989.

iii. *Methods for Aquatic Toxicity Identification evaluations: Phase I Toxicity Characterization Procedures*. Second Edition, EPA 600/6-91/005F, February 1991.

iv. *Toxicity Identification evaluation: Characterization of Chronically Toxic Effluents, Phase I*, EPA 600/6-91/005F, May 1992.

v. *Methods for Aquatic Toxicity Identification Evaluations: Phase II Toxicity Identification Procedures for Samples Exhibiting Acute and Chronic Toxicity,* Second Edition, EPA 600/R-92/080, September 1993.

vi. *Methods for Aquatic Toxicity Identification Evaluations: Phase III Toxicity Confirmation Procedures for Samples Exhibiting Acute and Chronic Toxicity*, Second Edition, EPA 600/R-92/081, September 1993.

vii. *Methods for Measuring the Acute Toxicity of Effluents and Receiving Waters to Freshwater and Marine Organisms,* Fifth Edition, EPA-821-R-02-012, October 2002.

viii. *Short-term Methods for Estimating the Chronic Toxicity of Effluents and Receiving Waters to Freshwater Organisms,* Fourth Edition, EPA-821-R-02-013, October 2002.

ix. *Technical Support Document for Water Quality-based Toxics Control*, EPA/505/2-90-001, March 1991.

c. Wastewater Reclamation Evaluation (Special Provision VI.C.2.b) This Order allows seasonal use of reclaimed wastewater. These discharges are required to comply with California Water Code sections 13500 – 13577 (Water Reclamation) and CDPH regulations at title 22, Cal. Code of Regs., sections 60301 – 60357 (Water Recycling Criteria). The special study required under this section of the Order requires the Discharge to evaluate the agronomic requirements of the crops being irrigated with recycled water and time to make adjustments to application practices, if necessary.

3. Best Management Practices and Pollution Prevention

a. Pollution Minimization Plan (Special Provision VI.C.2.c). Provision VI.C.2.c is included in this Order as required by section 2.4.5 of the SIP. The Regional Water Board included standard provisions in all NPDES permits requiring development of a Pollutant Minimization Program when there is evidence that a toxic pollutant is present in effluent at a concentration greater than an applicable effluent limitation.

4. Construction, Operation, and Maintenance Specifications

a. Operation and Maintenance (Special Provisions VI.C.2.d). 40 CFR 122.41(e) requires proper operation and maintenance of permitted wastewater systems and related facilities to achieve compliance with permit conditions. An up-to-date operation and maintenance manual, as required by Provision VI.C.2.d of the Order, is an integral part of a well-operated and maintained facility.

b. Septage Handling Requirements (Special Provisions VI.C.2.e). The Discharger currently accepts and treats septage at the WWTF. Domestic septage is defined as the liquid or solid material removed from a septic tank, cesspool, portable toilet, type III marine sanitation device, recreational vehicle's sanitation tank, or similar storage or treatment works that receives only domestic septage. Septage is characterized by high organic strength, high solids content, high odor potential, high vector attraction

potential, and high potential to pollute groundwater. Septage may be 6 to 80 times more concentrated than typical municipal wastewater and may also contain heavy metals and illicitly dumped hazardous materials. Septage has the potential to upset plant treatment operations or process performance or both if the plant is not designed to handle septage. Some of the impacts of septage addition to WWTFs include: potential toxic shock to biological processes; increased odor emissions; increased volume of grit, scum, screenings, and sludge; increased organic loading to biological processes; and increased housekeeping requirements. This Order requires the Discharger to manage septage accepted at the WWTF in a manner that ensures that pollutants associated with domestic septage do not pass through or interfere with the operation or performance of the WWTF.

5. Special Provisions for Municipal Facilities (POTWs Only)

The Regional Water Board includes special provisions in all NPDES Orders for municipal wastewater treatment facilities regarding wastewater collection systems, sanitary sewer overflows, source control, sludge handling and disposal, operator certification, and adequate capacity. These provisions assure efficient and satisfactory operation of municipal wastewater collection and treatment systems.

a. Wastewater Collection System (Special Provision VI.C.5.a)

i. Statewide General WDRs for Sanitary Sewer Systems. The State Water Board issued General Waste Discharge Requirements for Sanitary Sewer Systems, Water Quality Order No. 2006-0003-DWQ (General Order) on May 2, 2006. The General Order requires public agencies that own or operate sanitary sewer systems with greater than one mile of pipes or sewer lines to enroll for coverage under the General Order. The General Order requires agencies to develop sanitary sewer management plans (SSMPs) and report all SSOs, among other requirements and prohibitions.

Furthermore, the General Order contains requirements for operation and maintenance of collection systems and for reporting and mitigating sanitary sewer overflows. Inasmuch that the Discharger's collection system is part of the system that is subject to this Order, certain standard provisions are applicable as specified in Provisions, section VI.C.5. For instance, the 24-hour reporting requirements in this Order are not included in the General Order. The Discharger must comply with both the General Order and this Order. The Discharger and public agencies that are discharging wastewater into the facility were required to obtain enrollment for regulation under the General Order by December 1, 2006.

All NPDES permits for POTWs currently include federally required standard conditions to mitigate discharges (40 CFR 122.41(d)), to report non-compliance (40 CFR 122.41(1)(6) and (7)), and to properly operate and maintain facilities (40 CFR 122.41(e)). This provision is consistent with these federal requirements.

ii. Sanitary Sewer Overflows. (Special Provision VI.C.2.f.i). The Order also includes reporting provisions (Provision VI.C.5.(a)(2) and Attachment D subsections I.C., I.D., V.E., and V,H.) to ensure adequate and timely notifications are made to the Regional Water Board and appropriate local, state, and federal authorities. In addition, as an Enrollee under General Order No. 2006-0003-DWQ, the Discharger is required to report SSOs to an online SSO database administered through the California Integrated Water Quality System (CIWQS) and via telefax when the online SSO database is not available. Detailed notification and reporting requirements for SSOs and sewage spills are specified in section E of the MRP. The goal of these provisions is to ensure appropriate and timely response by the Discharger to SSOs to protect public health and water quality.

The MRP that is part of the Order establishes oral reporting limits for SSOs. The Discharger is required to orally report all spills, SSOs, and unauthorized discharges. If the spill volume is greater than 1,000 gallons or the spill reaches a drainage channel or surface waters, it must be reported within 2 hours of the Discharger becoming aware of the spill. All other spills must be reported within 24 hours. All SSOs, regardless of volume, must be electronically reported pursuant to State Water Board Order No. 2006-0003-DWQ, Statewide General Waste Discharge Requirements for Sanitary Sewer Systems.

b. Source Control Provisions (Special Provision VI.C.2.f.ii). Because the permitted flow of the Facility is less than 5.0 mgd, the Order does not require the Discharger to develop a pretreatment program that conforms to federal regulations. However, due to the identification of the reasonable potential for the priority pollutants cyanide and dichlorobromomethane in the discharge, this Order includes requirements for the Discharger to implement a source identification and reduction program. The Discharger's source identification and reduction program will need to address only those pollutants that continue to be detected by levels that trigger reasonable potential.

In addition, the Regional Water Board recognizes that some form of source control is prudent to ensure the efficient operation of the WWTF, the safety of the Discharger's staff, and to ensure that pollutants do not pass through the treatment facility to impair beneficial uses of the receiving water. The Order includes prohibitions for the discharge of pollutants that may interfere, pass through, or be incompatible with treatment operations, interfere with the use of disposal of sludge, or pose a health hazard to personnel.

c. Sludge Disposal and Handling (Special Provision VI.C.2.f.iii). The disposal or reuse of wastewater treatment screenings, sludges, or other solids removed from the liquid waste stream is regulated by 40 CFR Parts 257, 258, 501, and 503, the State Water Board promulgated provisions of title 27, Cal. Code of Regs., Division 2, and with the Water Quality Control Plan for Ocean Waters of California (California Ocean

Plan). The Discharger will be required to obtain coverage under State Water Board Water Quality Order No. 2004-0012-DWQ (General Waste Discharge Requirements for the Discharge of Biosolids to Land as a Soil Amendment in Agricultural, Silvicultural, Horticultural, and Land Reclamation Activities) or other applicable WDRs issued by the Regional Water Board.

d. **Operator Certification (Special Provision VI.C.2.f.iv).** This provision requires the WWTF to be operated by supervisors and operators who are certified as required by title 23, Cal. Code of Regs., section 3680.

e. **Adequate Capacity (Special Provision VI.C.2.f.v).** The goal of this provision is to ensure appropriate and timely planning by the Discharger to ensure adequate capacity for the protection of public health and water quality.

f. **Statewide General WDRs for Discharge of Biosolids to Land (Special Provision VI.C.2.f.vi).** This provision requires the Discharger to comply with the State's regulations relating to the discharge of biosolids to the land. The discharge of biosolids through land application is not regulated under this Order.

6. Other Special Provisions

a. **Storm Water (Special Provision VI.C.2.g.i).** This provision requires the Discharger, if applicable, to comply with the State's regulations relating to industrial storm water activities. Currently, the Discharge is exempted from these requirements because storm water is captured, treated, and disposed of within the Facility's NPDES permitted process wastewater.

b. **Compliance Schedules (Special Provision VI.C.2.g.i).** The Order does not contain a compliance schedule. This section is not applicable to the Facility.

VIII. PUBLIC PARTICIPATION

The California Regional Water Quality Control Board, North Coast Region (Regional Water Board) is considering the issuance of waste discharge requirements (WDRs) that will serve as a National Pollutant Discharge Elimination System (NPDES) permit for the City of Willits Wastewater Treatment Facility. As a step in the WDR adoption process, the Regional Water Board staff has developed tentative WDRs. The Regional Water Board encourages public participation in the WDR adoption process.

A. Notification of Interested Parties

The Regional Water Board has notified the Discharger and interested agencies and persons of its intent to prescribe waste discharge requirements for the discharge and has provided them with an opportunity to submit their written comments and recommendations. Notification was provided through posting at the Willits City Hall, the community library bulletin board, on the Regional Water Board's Internet site at:

http://www.waterboards.ca.gov/northcoast/public_notices/notice_of_consideration/ and through publication in the Willits News on March 29, 2010.

B. Written Comments

The staff determinations are tentative. Interested persons are invited to submit written comments concerning these tentative WDRs. Comments must be submitted either in person or by mail to the Executive Office at the Regional Water Board at the address above on the cover page of this Order.

To be fully responded to by staff and considered by the Regional Water Board, written comments must be received at the Regional Water Board offices by 5:00 p.m. on April 28, 2010.

C. Public Hearing

The Regional Water Board will hold a public hearing on the tentative WDRs during its regular Board meeting on the following date and time and at the following location:

Date:	June 10, 2010
Time:	8:30 a.m.
Location:	Regional Water Board Office, Board Hearing Room 5550 Skylane Boulevard, Suite A Santa Rosa, CA 95403

Interested persons are invited to attend. At the public hearing, the Regional Water Board will hear testimony, if any, pertinent to the discharge, WDRs, and permit. Oral testimony will be heard; however, for accuracy of the record, important testimony should be in writing.

Please be aware that dates and venues may change. Our Web address is http://www.waterboards.ca.gov/northcoast where you can access the current agenda for changes in dates and locations.

D. Waste Discharge Requirements Petitions

Any aggrieved person may petition the State Water Resources Control Board to review the decision of the Regional Water Board regarding the final WDRs. The petition must be submitted within 30 days of the Regional Water Board's action to the following address:

State Water Resources Control Board
Office of Chief Counsel
P.O. Box 100, 1001 I Street
Sacramento, CA 95812-0100

E. Information and Copying

The Report of Waste Discharge (RWD), related documents, tentative effluent limitations and special provisions, comments received, and other information are on file and may be inspected at the address above at any time between 8:30 a.m. and 4:45 p.m., Monday through Friday. Copying of documents may be arranged through the Regional Water Board by calling (707) 576-2220.

F. Register of Interested Persons

Any person interested in being placed on the mailing list for information regarding the WDRs and NPDES permit should contact the Regional Water Board, reference this facility, and provide a name, address, and phone number.

G. Additional Information

Requests for additional information or questions regarding this order should be directed to Lisa Bernard at (707) 576-2677 or lbernard@waterboards.ca.gov.

ATTACHMENT G 1 – FINAL AMMONIA AVERAGE MONTHLY EFFLUENT LIMITATIONS

Ammonia (mg N/L)											
Receiving Water pH	**Receiving Water Temperature, °C**										
	0	**14**	**15**	**16**	**18**	**20**	**22**	**24**	**26**	**28**	**30**
6.5	6.7	6.7	6.5	6.1	5.3	4.7	4.1	3.6	3.2	2.8	2.5
6.6	6.6	6.6	6.4	6.0	5.2	4.6	4.1	3.6	3.1	2.8	2.4
6.7	6.4	6.4	6.2	5.9	5.1	4.5	4.0	3.5	3.1	2.7	2.4
6.8	6.3	6.3	6.1	5.7	5.0	4.4	3.9	3.4	3.0	2.6	2.3
6.9	6.1	6.1	5.9	5.6	4.9	4.3	3.8	3.3	2.9	2.6	2.3
7.0	5.9	5.9	5.7	5.4	4.7	4.2	3.6	3.2	2.8	2.5	2.2
7.1	5.7	5.7	5.5	5.2	4.5	4.0	3.5	3.1	2.7	2.4	2.1
7.2	5.4	5.4	5.2	4.9	4.3	3.8	3.3	2.9	2.6	2.3	2.0
7.3	5.1	5.1	4.9	4.6	4.1	3.6	3.1	2.8	2.4	2.1	1.9
7.4	4.7	4.7	4.6	4.3	3.8	3.3	2.9	2.6	2.3	2.0	1.7
7.5	4.4	4.4	4.2	4.0	3.5	3.1	2.7	2.4	2.1	1.8	1.6
7.6	4.0	4.0	3.9	3.6	3.2	2.8	2.5	2.2	1.9	1.7	1.5
7.7	3.6	3.6	3.5	3.3	2.9	2.5	2.2	1.9	1.7	1.5	1.3
7.8	3.2	3.2	3.1	2.9	2.5	2.2	2.0	1.7	1.5	1.3	1.2
7.9	2.8	2.8	2.7	2.5	2.2	2.0	1.7	1.5	1.3	1.2	1.0
8.0	2.4	2.4	2.4	2.2	1.9	1.7	1.5	1.3	1.2	1.0	0.90
8.1	2.1	2.1	2.0	1.9	1.7	1.5	1.3	1.1	1.0	0.88	0.77
8.2	1.8	1.8	1.7	1.6	1.4	1.3	1.1	0.97	0.86	0.75	0.66
8.3	1.5	1.5	1.5	1.4	1.2	1.1	0.94	0.83	0.73	0.64	0.56
8.4	1.3	1.3	1.3	1.2	1.0	0.91	0.80	0.70	0.62	0.54	0.48
8.5	1.1	1.1	1.1	0.99	0.87	0.76	0.67	0.59	0.52	0.46	0.40
8.6	0.92	0.92	0.89	0.84	0.73	0.65	0.57	0.50	0.44	0.39	0.34
8.7	0.78	0.78	0.75	0.71	0.62	0.55	0.48	0.42	0.37	0.33	0.29
8.8	0.66	0.66	0.64	0.60	0.53	0.46	0.41	0.36	0.32	0.28	0.24
8.9	0.56	0.56	0.55	0.51	0.45	0.40	0.35	0.31	0.27	0.24	0.21
9.0	0.49	0.49	0.47	0.44	0.39	0.34	0.30	0.26	0.23	0.20	0.18

ATTACHMENT G-2 – FINAL AMMONIA MAXIMUM DAILY EFFLUENT LIMITATIONS

Receiving Water pH	Ammonia mg/L N
6.5	33
6.6	31
6.7	30
6.8	28
6.9	26
7.0	24
7.1	22
7.2	20
7.3	18
7.4	15
7.5	13
7.6	11
7.7	9.6
7.8	8.1
7.9	6.8
8.0	5.6
8.1	4.6
8.2	3.8
8.3	3.1
8.4	2.6
8.5	2.1
8.6	1.8
8.7	1.5
8.8	1.2
8.9	1.0
9.0	0.88

ATTACHMENT H – WATER RECLAMATION REQUIREMENTS AND PROVISIONS

A. Water Reclamation Findings

1. In 1977, the State Water Board adopted Resolution No. 77-1, titled "Policy with Respect to Water Reclamation in California" (Resolution No. 77-1). Resolution No. 77-1, in part, encourages the use of recycled water in the state.

2. On February 3, 2009, the State Water Board adopted Resolution No. 2009-0011, titled "Adoption of a Policy for the Water Quality Control of Recycled Water" (Recycled Water Policy). The goal of the Recycled Water Policy is to increase the use of recycled water from municipal wastewater sources that meets the definition in Water Code section 13050(n). In accordance with the Recycled Water Policy, activities involving recycled water use that could impact high quality waters are required to implement best practicable treatment or control of the discharge necessary to ensure that pollution or nuisance will not occur, and the highest water quality consistent with the maximum benefit to the people of the state will be maintained.

3. The California Department of Public Health (CDPH) (formerly California Department of Health Services or DHS) has established statewide reclamation criteria in Chapter 3, Division 4, title 22, CCR, sections 60301 through 60355 (hereinafter title 22) for the use of recycled water for irrigation, impoundments, cooling water, and other purposes. The CDPH has also established Guidelines for Use of Reclaimed Water. This Order (Order No. R1-2010-0017, including Attachment H) implements the title 22 recycled water criteria.

4. In 1996, the State Water Board and CDPH set forth principles, procedures, and agreements to which the agencies committed themselves, relative to the use of recycled water in California, in a document titled Memorandum of Agreement between the Department of Health Services and the State Water Resources Control Board on the Use of Reclaimed Water (MOA). This Order is consistent with the MOA.

5. This Order implements section 13523.1 of the California Water Code (CWC) which authorizes issuance of a Master Reclamation Permit to suppliers or distributors, or both, of recycled water in lieu of issuing individual water reclamation requirements to each recycled water user.

6. The Discharger is required to develop and keep updated, an Engineering Report for the use of recycled water as required by section 60323 of title 22. This title 22 Engineering Report must be approved by CDPH and the Regional Water Board Executive Officer prior to delivery of disinfected, treated effluent to any recycled water use site as required by title 22.

7. This Order requires the Discharger to minimize the potential for surface runoff of recycled water, but recognizes that even with diligent implementation of BMPs, incidental runoff events may occur on occasion. Incidental runoff is defined as unintended small amounts (volume) of runoff from recycled water use areas, such as unintended, minimal over-spray from sprinklers that escapes the recycled water use area. Water leaving a recycled water use area is not considered incidental if it is part of the facility design, if it is due to excessive application, if it is due to intentional overflow or application, or if it is due to negligence. Incidental runoff events are typically infrequent, low volume, accidental, not due to a pattern of neglect or lack of oversight, and are promptly addressed. The Regional Water Board recognizes that such minor violations are unavoidable and present a low risk to water quality. All runoff incidents, including incidental runoff, shall be summarized in the Discharger's quarterly recycled water monitoring report. Enforcement action shall be considered for runoff that is not incidental, inadequate response by the Discharger to incidental runoff incidents, repeated runoff incidents that were within the Discharger's control, where incidental runoff directly causes violations of water quality objectives, incidents that create a condition of pollution or nuisance, and discharges that reach surface water in violation of Discharge Prohibitions in section III of the Order and/or Water Reclamation Requirements in Attachment G, section B.4 or B.6.

8. This Order authorizes the Discharger to reuse treated municipal wastewater that complies with effluent limitations contained in section IV of the Order for uses that have been addressed in a title 22 Engineering Report and for which recycled water user agreements have been negotiated.

9. Effluent Limitations included in Order No. R1-2010-0017 will assure compliance with requirements contained in title 22 and the CDPH (DHS)/State Water Board MOA.

10. The Discharger must demonstrate that the storage and use of recycled water complies with the requirements of the California Water Code and title 27 of the California Code of Regulations.

11. The Regional Water Board consulted with CDPH, the Sonoma County Health Department, and the local Mosquito Abatement District and considered any recommendations regarding public health aspects for this use of recycled water.

B. Water Reclamation Requirements

1. The use of recycled water shall not result in unreasonable waste of water. Recycled water shall not be applied at greater than agronomic rates.

2. The use of recycled water shall not create a condition of pollution or nuisance as defined in CWC section 13050(m).

3. All recycled water provided pursuant to this Order shall be treated and managed in conformance with all applicable provisions of the Recycled Water Policy.

4. Best management practices that are protective of groundwater and surface water quality and human health shall be developed and implemented to achieve an efficient irrigation system. At a minimum, the Discharger shall implement the required BMPs identified in Attachment H (Section I.A. through I.D.) and implement other BMPs as appropriate. .

5. The Discharger shall be responsible for ensuring that recycled water meets the quality standards of section IV.C of this Order and that all users of recycled water comply with the terms and conditions of this Order and with any rules, ordinances, or regulations adopted by the Discharger.

6. The Discharger shall discontinue delivery of recycled water during any period in which there is reason to believe that the requirements for use as specified in this Order or the requirements of CDPH or USEPA are not being met. The delivery of recycled water shall not resume until all conditions have been corrected.

7. The Discharger shall notify recycled water users if recycled water that does not meet the recycled water quality requirements of this Permit is released into the reclamation system.

8. The Discharger shall require each recycled water user to report all violations of recycled water regulations identified in this Order, including runoff incidents. All reported violations of recycled water regulations shall be included in the Discharger's quarterly recycled water monitoring report, including incidental runoff events that the Discharger is aware of.

9. Application of recycled water to use areas shall not exceed the nitrogen or hydraulic loading reasonably necessary to satisfy the nitrogen or water uptake needs of the use area considering plant, soil, climate, and nutrient demand (i.e., generally accepted agronomic rates).

    a. Hydraulic loading to any individual recycled water use site shall be at reasonable agronomic rates designed to minimize percolation of wastewater constituents below the evaporative and root zone.

    b. The seasonal nutritive loading of use areas, including the nutritive value of organic and chemical fertilizers and of the recycled water, shall not exceed the nutritive demand of the landscape or vegetation receiving the recycled water.

10. Recycled water shall not be applied on water-saturated or frozen ground or during periods of precipitation such that runoff is induced.

11. Recycled water shall not be allowed to escape the recycled use area(s) in the form of surface runoff. [CCR title 22, section 60310(e)] Practices and strategies to prevent the occurrence of runoff shall include, but not be limited to:

a. All new recycled water use sites shall include a 100 foot setback to all surface waters or provide documentation of the infeasibility of the 100 foot set back with a demonstration that additional best management practices will be implemented in order to prevent or minimize the potential for runoff discharging to surface water;

b. Urban recycled water use sites shall maintain appropriate setbacks to the street gutter and other inlets to the stormdrain system based on site conditions or implement alternative means to prevent the discharge of runoff to the surface waters.

c. Implementation of an Operations and Maintenance Plan that provides for detection of leaks (for example, from sprinkler heads), and correction within 72 hours of learning of the runoff, or prior to the release of 1,000 gallons, whichever comes first.

d. Proper design and aim of sprinkler heads;

e. Refraining from application during precipitation events;

f. Apply recycled water at an agronomic rate that does not exceed the water or nutrient demand of the crop or vegetation being irrigated; and

g. Use of alternating start times water days to increase irrigation efficiency and reduce runoff potential.

12. Use areas that are spray irrigated and allow public access shall be irrigated during periods of minimal use. Consideration shall be given to allow maximum drying time prior to subsequent public use.

13. Direct or windblown spray, mist, or runoff from irrigation areas shall not enter dwellings, designated outdoor eating areas, or food handling facilities, roadways, or any other area where the public would be accidentally exposed to recycled water. [CCR title 22, section 60310(e)(3)]

14. Drinking water fountains shall be protected against contact with recycled water spray, mist, or runoff. [CCR title 22, section 60310(e)(3)]

15. There shall be no bypassing of untreated or partially treated wastewater from the recycled water plant or any intermediate processes to the point of use. [CCR title 22, section 60331]

16. All recycled water equipment, pumps, piping, valves, and outlets shall be appropriately marked to differentiate them from potable facilities.

17. The Discharger shall implement the requirements of the California Health and Safety Code (CHSC), section 116815 regarding the installation of purple pipe. CHSC section 116815 requires that "all pipes installed above or below the ground, on or after June 1,

1993, that are designed to carry recycled water, shall be colored purple or distinctively wrapped with purple tape." Section 116815 also contains exemptions that apply to municipal facilities that have established a labeling or marking system for recycled water used on their premises and for water delivered for agricultural use. The Discharger shall document compliance with this requirement on an annual basis in its annual monitoring report. The Discharger shall continue to implement the requirements of CHSC section 116815 during the term of this Order.

18. The portions of the recycled water piping system that are in areas subject to access by the general public shall not include any hose bibbs. Only quick couplers that differ from those used on the potable water system shall be used on the portions of the recycled water piping system in areas subject to public access. [CCR title 22, section 60310(l)]

19. Cross-connections shall not occur between any recycled water system and any separate system conveying potable water. [22 CCR, section 60310(h)] Supplementing recycled water with potable water shall not be allowed except through air gap separation [CCR title 22, section 30615].

20. All reservoirs and ponds storing wastewater or recycled water shall be adequately protected from erosion, washout, or flooding from a rainfall event having a predicted frequency of once in 100 years.

21. Disinfected enhanced secondary recycled water shall not be irrigated within 100 feet of any domestic water supply well or domestic water supply surface intake, as specified in CCR title 22, section 60310(c.

22. The use of recycled water shall not cause degradation of any water supply.

23. Areas irrigated with recycled water shall be managed to prevent ponding and conditions conducive to the proliferation of mosquitoes and other disease vectors, and to avoid creation of a public nuisance or health hazard. Irrigation water shall infiltrate completely within a 24-hour period.

24. All areas where recycled water is used that are accessible to the public shall be posted with signs that are visible to the public, in a size no less than 4 inches high by 8 inches wide that include the following wording: 'RECYCLED WATER – DO NOT DRINK'. [CCR title 22, section 60310(g)] Each sign shall display an international symbol similar to that shown in CCR title 22, Figure 60310-A. These warning signs shall be posted at least every 500 feet with a minimum of a sign at each corner and access road. CDPH may accept alternative signage and wording, or an educational program, provided that applicant demonstrates to CDPH that the alternative approach will assure an equivalent degree of public notification.

25. DHS (now CDPH) Guidance Memo No. 2003-02: Guidance Criteria for the Separation of Water Mains and Non-Potable Pipelines provides guidance for the separation of new potable water mains and recycled water pipelines which shall be implemented as follows:

a. There shall be at least a four-foot horizontal separation between all pipelines transporting recycled water and those transporting disinfected recycled water and new potable water mains.

b. There shall be at least a one-foot vertical separation at crossings between all pipelines transporting recycled water and potable water mains, with the potable water main above the recycled water pipeline, unless approved by the CDPH.

c. All portions of the recycled water pipeline that cross under a potable water main shall be enclosed in a continuous sleeve.

d. Recycled water pipelines shall not be installed in the same trench as new water mains.

e. Where site conditions make it impossible to comply with the above conditions, any variation shall be approved by CDPH and comply with alternative construction criteria for separation between sanitary sewers and potable water mains as described in the CDPH document titled “Criteria for Separation of Water Mains and Sanitary Sewers”, treating the recycled water line as if a sanitary sewer.

26. A minimum freeboard, consistent with pond design, but not less than two feet, shall be maintained under normal operating conditions in any reservoir or pond containing recycled water. When extraordinary operating conditions necessitate a freeboard of less than two feet, the Discharger will document the variance in the monthly self-monitoring report. The report will include an explanation of the circumstances under which the variance is required, the estimated minimum freeboard during the extraordinary period, and any permit violations occurring as a result of the variance.

27. The use of recycled water for dust suppression shall only occur during periods of dry weather, shall be limited to periods of short duration, and shall be limited to areas under the control of the Discharger.

C. Water Reclamation Provisions

1. The Discharger shall manage recycled water, and shall develop, establish and enforce administrative procedures, engineering standards, rules, ordinances and/or regulations governing the design and construction of recycled water systems and use facilities and the use of recycled water in accordance with the criteria established in CCR title 22 and this Order. The Discharger shall develop user agreements requiring user compliance with CCR title 22 and this Order. Water reclamation engineering standards, rules, ordinances and/or regulations shall be approved by the Regional Water Board Executive Officer and CDPH.

2. The Discharger shall submit revised and/or additional engineering report(s) to the Regional Water Board and CDPH , prior to initiating any recycled water use (e.g., new industrial use, recreational surface impoundments, water cooling, new dual-plumbed

system, etc.) not addressed in any previously submitted~~approved~~ CCR title 22 engineering report(s). The Discharger shall also submit any approval letters prepared by CDPH to the Regional Water Board. Engineering report(s) shall be prepared by a properly qualified engineer registered in California and experienced in the field of wastewater treatment, and shall contain (1) a description of the design of the reclamation system; (2) a contingency plan which will assure that no untreated or inadequately treated wastewater will be delivered to the use areas; and (3) a cross-connection control program (title 17 of the California Code of Regulations) where a dual-plumbed system is used. Engineering reports shall clearly indicate the means for compliance with CCR title 22 regulations and this Order.

3. The Discharger shall conduct periodic inspections of the recycled water use areas, facilities, and operations to monitor and assure compliance with the conditions of this Order. The Discharger shall take whatever actions are necessary, including termination of delivery of recycled water, to correct any user violations. Where dual-plumbed systems are utilized, the Discharger shall, upon prior notification to the user, conduct regular inspections to assure cross-connections are not made with potable water systems and CDPH approved backflow prevention devices are installed and operable.

4. The Discharger shall be responsible for ensuring that recycled water meets the quality standards of this Order and for the operation and maintenance of transport facilities and associated appurtenances. The Discharger shall hold the recycled water users responsible for the application and use of recycled water on their designated areas and associated operations and maintenance in accordance with all applicable CCR title 22 requirements and this Order.

   Prior to reclaiming water at a new location(s), the Discharger shall submit for Regional Water Board Executive Officer review and approval a technical report that includes an Operations and Irrigation Management Plan identifying ~~that includes~~ management practices that will be implemented to protect surface water and groundwater quality. Alternatively, the Discharger may address this requirement programmatically by submitting a single technical report or a series of technical reports that identifies the operations and irrigation management plan for a group or group of sites where recycled water will be applied to a similar crop (e.g., same crop or same water and nutrient needs) utilizing the same irrigation method. The programmatic report must also consider other factors, such as land slope, soil type and proximity to surface waters that affect agronomic rates.

5. After preliminary review for completeness and adequacy for water quality protection, each individual or programmatic technical report shall be subject to a minimum 30-day public notice period. Because proposed recycled water use sites must be addressed in a certified CEQA document, which includes a process for public comment, the Regional Water Board will limit public comment on the information provided in the technical report to comments on the proposed management practices and hydraulic and nutrient agronomic rates proposed by the Discharger that are related to protection of surface

water and groundwater quality and beneficial uses thereof. The Regional Water Board Executive Officer will place a public notice on the Regional Water Board's website and will also require the Discharger to mail the notice to adjacent residences and businesses. If no public comments are received, the Regional Water Board Executive Officer will authorize the addition of the new recycled water use after final review of the technical report. If significant public comments are received that provide substantial evidence showing water quality impacts, the Discharger shall attempt to resolve the issues and/or the Executive Officer may schedule an action item to be considered at a Regional Water Board meeting. After submittal, public review and approval of a programmatic technical report, the Discharger must submit site-specific reports that provide specific details for each use site prior to reclaiming water at the new location. The site-specific report is not subject to the public comment period and is subject to Executive Officer approval.

The individual or programmatic technical report shall include a complete description of the proposed recycled water use, including the following:

a. Map(s) identifying site location and topography, location of irrigation system in relation to all surface waters and wells that are within 200 feet of the boundaries of the irrigation area, public access points to the irrigation system, adjacent property boundaries, locations of structures and utilities that require protection from recycled water (e.g., eating facilities, drinking water fountains, etc).

b. Acreage involved;

c. County Assessor Parcel number(s);

d. Name of property owner and/or user;

e. Names, contact information, and assessor parcel numbers for adjacent properties that border the proposed irrigation area;

f. Proof of signed user agreement;

g. Use site inspection schedule; and

h. Development of an Irrigation Management Plan. The Irrigation Management Plan shall include measures to ensure that the use of recycled water occurs at an appropriate hydraulic and nutrient agronomic rates and that management while employing practices are incorporated to ensure irrigation efficiency and necessary to minimize the potential for surface water runoff or percolation of nutrients, salts or other constituents to groundwater. A programmatic O&M Plan must include a menu of BMPs that may be selected from for each individual use site.

    a. The Irrigation Management Plan shall include an assessment of the following use site characteristics and factors:

(1) Soil characteristics (e.g., soil type, nutrient content, transmissivity, etc.);

(2) Depth to groundwater;

(3) Recycled water characteristics (e.g., nutrients, including nitrogen and phosphorus content, specific ion toxicity, including chloride, boron, sodium, bicarbonate and other parameters)

(4) General requirements of the plant species being irrigated (e.g., seasonal water demand, climate, nutrient requirements) and whether the plant species are annual or perennial;

(5) Climatic conditions (e.g., precipitation, evapotranspiration rate, wind);

(6) Other supplemental nutrient additions (e.g., chemical fertilizers) generally used within the use area; and

(7) Summary of general farming practices, including field preparation, planting, fertilization, and harvesting and timing of irrigation (period of irrigation and time of day that irrigation will occur).

b. The Irrigation Management Plan shall also include:

(1) Depth to groundwater in the area(s) of application;

(2) Water budgeting using evapotranspiration data from CIMIS or an on-site weather station and crop coefficients from Water Use Classification of Landscape Species (WUCOLS);

(3) Calculation of the amount of recycled water that can be agronomically applied to the use site (considering the factors identified above);

(4) Salt and nutrient management plan;

(5) Water balance demonstrating that the application of recycled water at the proposed volume, rate, and timing will not allow the discharge of recycled water to groundwater or surface water, nor cause degradation of groundwater (e.g., due to pollutants such as salts or nutrients building up in soils and being mobilized and transported to groundwater with rainwater);

(6) Description of the recycled water management facilities and operations plan, including best management practices that will be implemented to ensure that recycled water is not overapplied nor result in a discharge to surface waters nor cause adverse impacts to groundwater. Typical BMPs are referred to in section B.11 of this attachment (Attachment H);

(7) The Irrigation Management Plan shall also recognize the possibility of runoff from recycled water use areas and describe measures, including BMPs the Discharger will implement to minimize this possibility of runoff.

(8) Compliance with any applicable salt and nutrient management plan;

(9) A plan for appropriate use of fertilizers that takes into account the nutrient levels in the recycled water. The Discharger shall monitor and communicate to the recycled water users the nutrient levels in the recycled water.

(10) Where unique, site-specific conditions exist, such as where recycled water is proposed to be used for irrigation over high transmissivity soils and over a shallow (5 feet or less) high quality groundwater aquifer, additional requirements, including a special study to determine the appropriateness of recycled water use and develop appropriate best management practices and operations plans to ensure that recycled water is applied in a manner that is protective of groundwater. The special study may include groundwater monitoring, development of a detailed water balance and/or salt and nutrient management plan.

(11) Identification of the person(s) responsible for site management;

(12) Identification of consultation(s) with state and local health departments, if necessary;

(13) Any additional information needed to demonstrate that compliance with all recycled water requirements of this Master Reclamation Permit and CCR title 22 criteria will be achieved.

6. If, in the opinion of the Regional Water Board Executive Officer, recycled water use at proposed new locations cannot be adequately regulated under the Master Reclamation Permit, individual Water Reclamation Requirements may be adopted.

7. Prior to the initial operation of any dual-plumbed recycled water system, and annually thereafter, the Discharger shall ensure that the dual-plumbed system within each facility and use area is inspected for possible cross connections with the potable water system. The recycled water system shall also be tested for possible cross connections at least once every four years. The testing shall be conducted in accordance with the method described in the Engineering Report. The inspections and the testing shall be performed by a cross connection control specialist certified by the California-Nevada section of the American Water Works Association or an organization with equivalent certification requirements. A written report documenting the result of the inspection or testing for the prior year shall be submitted to CDPH and the Regional Water Board by March 1 of each year. [CCR title 22, section 60316]

8. If the Discharger delivers recycled water to any dual-plumbed recycled water system(s), the Discharger shall notify CDPH and the Regional Water Board of any incidents of

backflow from the dual-plumbed recycled water system into the potable water system within 24 hours of the discovery of the incident.

9. Any backflow prevention device installed to protect the public water system serving the dual-plumbed recycled water system shall be inspected and maintained in accordance with section 7605 of title 17, CCR.