California Regional Water Quality Control Board
North Coast Region
Robert E. Anderson, Chairman

Linda S. Adams
Secretary for Environmental Protection

www.waterboards.ca.gov/northcoast
5550 Skylane Boulevard, Suite A, Santa Rosa, California 95403
Phone: (877) 721-9203 (toll free) • Office: (707) 576-2220 • FAX: (707) 523-0135

Arnold Schwarzenegger
Governor

ORDER NO. R1-2009-0034
NPDES NO. CA0022721
WDID NO. 1B83136OHUM

WASTE DISCHARGE REQUIREMENTS FOR THE CITY OF FERNDALE, WASTEWATER TREATMENT FACILITY

The following Discharger is subject to waste discharge requirements as set forth in this Order:

Table 1. Discharger Information

Discharger	**City of Ferndale**
Name of Facility	**City of Ferndale Wastewater Treatment Facility**
Facility Address	**701 Port Kenyon Road**
	Ferndale, CA 95536
	Humboldt County
The U.S. Environmental Protection Agency (USEPA) and the Regional Water Quality Control Board have classified this discharge as a minor discharge.	

The discharges by the City of Ferndale from the discharge points identified below are subject to waste discharge requirements as set forth in this Order:

Table 2. Discharge Location

Discharge Point	Effluent Description	Discharge Point Latitude	Discharge Point Longitude	Receiving Water
001	Secondary/Tertiary Treated Municipal Wastewater	40º 35’ 40” N	124º 15’ 44” W	Francis Creek/Salt River
002	Secondary Treated Municipal Wastewater	Reclamation / Irrigation Use on Neighboring Agricultural Land		

Table 3. Administrative Information

This Order was adopted by the Regional Water Quality Control Board on:	**July 23, 2009**
This Order shall become effective on:	**September 1, 2009**
This Order shall expire on:	**September 1, 2014**
The Discharger shall file a Report of Waste Discharge in accordance with title 23, California Code of Regulations, as application for issuance of new waste discharge requirements no later than:	210 days prior to the Order expiration date: February 10, 2014)

IT IS HEREBY ORDERED, that this Order supersedes Order No. R1-2008-0038 upon the effective date specified in Table 3. This action in no way prevents the Regional Water Quality Control Board from taking any enforcement action for past violations of the previous permit. If any part of this Order is subject to a temporary stay of enforcement, unless otherwise specified, the discharger shall comply with the analogous portions of Order No. R1-2009-0034, which shall remain in effect for all purposes during the pendency of the stay.

I, Catherine Kuhlman, Executive Officer, do hereby certify that this Order with all attachments is a full, true, and correct copy of an Order adopted by the California Regional Water Quality Control Board, North Coast Region, on **July 23, 2009.**

_____

Catherine Kuhlman, Executive Officer

Table of Contents

I. .....Facility Information 5
II. .....Findings 5
A. Background. 5
B. Facility Description. 5
C. Legal Authorities. 6
D. Background and Rationale for Requirements. 6
E. California Environmental Quality Act (CEQA). 7
F. Technology-Based Effluent Limitations. 7
G. Water Quality-Based Effluent Limitations. 7
H. Water Quality Control Plans. 8
I. National Toxics Rule (NTR) and California Toxics Rule (CTR). 9
J. State Implementation Policy. 9
K. Compliance Schedules and Interim Requirements. 9
L. Alaska Rule. 10
M. Stringency of Requirements for Individual Pollutants. 10
N. Antidegradation Policy. 11
O. Anti-Backsliding Requirements. 11
P. Endangered Species Act. 11
Q. Monitoring and Reporting. 11
R. Standard and Special Provisions. 12
S. Provisions and Requirements Implementing State Law. 12
T. Notification of Interested Parties. 12
U. Consideration of Public Comment. 12
III. ....Discharge Prohibitions 12
A. The discharge of any waste not disclosed by the Discharger or not within the reasonable contemplation of the Regional Water Board is prohibited. 12
IV.....Effluent Limitations and Discharge Specifications 13
A. Effluent Limitations for New WWTF – Discharge Point 001 13
B. Effluent Limitations for Existing WWTF – Discharge Point 001 15
C. Land Discharge Specifications 17
D. Reclamation Specifications – Discharge Point 002 17
E. Other Requirements 18
V.....Receiving Water Limitations 19
A. Surface Water Limitations 19
B. Groundwater Limitations 21
VI.....Provisions 21
A. Standard Provisions 21
B. Monitoring and Reporting Program (MRP) Requirements 23
C. Special Provisions 23
1. Reopener Provisions 23
2. Special Studies, Technical Reports and Additional Monitoring Requirements 24
3. Best Management Practices and Pollution Prevention 26
4. Construction, Operation and Maintenance Specifications 27
5. Special Provisions for Municipal Facilities (POTWs Only) 28

6. Other Special Provisions – Stormwater 32
7. Compliance Schedules 33
VII....Compliance Determination 33

List of Tables

Table 1. Discharger Information 1
Table 2. Discharge Location 1
Table 3. Administrative Information 1
Table 4. Facility Information 5
Table 5. Basin Plan Beneficial Uses 8
Table 6. Effluent Limitations New WWTF – Discharge Point 001 14
Table 7. Effluent Limitations Existing WWTF– Discharge Point 001 16
Table 8. Reclamation Discharge Specifications – Discharge Point 002 18

List of Attachments

Attachment A – Definitions A-1
Attachment B – Map B-1
Attachment C – Flow Schematic C-1
Attachment D – Standard Provisions D-1
Attachment E – Monitoring and Reporting Program (MRP) E-1
Attachment F – Fact Sheet F-1

I. FACILITY INFORMATION

The following Discharger is subject to waste discharge requirements as set forth in this Order:

Table 4. Facility Information

Discharger	City of Ferndale
Name of Facility	City of Ferndale Wastewater Treatment Facility
Facility Address	701 Port Kenyan Road
	Ferndale, CA 95536
	Humboldt County
Facility Contact, Title, and Phone	Jay Parrish, City Manager, (707) 786-4224
Mailing Address	834 Main Street, P.O. Box 1095, Ferndale, CA 95536
Type of Facility	Publicly Owned Treatment Works
Existing Facility Design Flow	0.576 million gallons per day (mgd) Average Dry Weather Flow Treatment Capacity (ADWF)
New Facility Design Flow	0.55 mgd ADWF 0.95 mgd Peak Wet Weather Flow Treatment Capacity (PWWF)

II. FINDINGS

The California Regional Water Quality Control Board, North Coast Region (hereinafter the Regional Water Board), finds:

A. Background.

The City of Ferndale (hereinafter Discharger) is currently discharging pursuant to Order No. R1-2008-0038 and National Pollutant Discharge Elimination System (NPDES) Permit No. CA0022721. The Discharger submitted a Report of Waste Discharge, dated January 15, 2009, and applied for an NPDES permit renewal proposing construction of a new wastewater treatment facility (WWTF) that will discharge an Average Dry Weather Flow (ADWF) up to 0.55 million gallons per day (mgd) and a Peak Wet Weather Flow (PWWF) up to 0.95 mgd of treated wastewater. Until the new WWTF is constructed and operational, the Discharger will continue to operate the existing WWTF under the terms set out in IV.B of this Order. The application was deemed complete on February 12, 2009. For the purposes of this Order, references to the “discharger” or “permittee” in applicable federal and state laws, regulations, plans, or policy are held to be equivalent to references to the Discharger herein.

B. Facility Description.

The Discharger owns and/or operates a municipal wastewater treatment facility and associated wastewater collection, reclamation, and disposal facilities that serve a population of 1,457 residential and commercial users. The existing treatment system

includes headworks with an influent lift station, an oxidation pond, a polishing pond, a chlorine contact basin, a dechlorination system, and effluent pumping. The existing facility is designed to treat an average dry-weather flow (ADWF) of 0.576 mgd. The average annual flow at the existing WWTF between January 2007 and March 2009 was 0.43 mgd.

The Discharger plans to construct a new WWTF within the effective period of this Order. The new WWTF system will provide tertiary treatment of wastewater. The new WWTF will include a wet-weather flow equalization basin, headworks with an influent lift station, three surge pumps (one used for redundancy), a bar screen and comminutor; a selector tank, two extended aeration basins, two rectangular clarifiers, two aerobic sludge digesters, disc filtration, an ultraviolet disinfection system, and a holding basin for temporary storage of treated effluent.

From October 1 through May 14, treated wastewater is discharged at Discharge Point 001 to Francis Creek near its confluence with the Salt River; both are waters of the United States and tributary to the Lower Eel River. From May 15 through September 30, treated wastewater is applied to agricultural land via Discharge Point 002.

Attachment B provides a map of the area around the facility. Attachments C1 and C2 provide flow schematics of the existing and new facilities respectively.

C. Legal Authorities.

This Order is issued pursuant to section 402 of the federal Clean Water Act (CWA) and implementing regulations adopted by the U.S. Environmental Protection Agency (USEPA) and chapter 5.5, division 7 of the California Water Code (commencing with section 13370). It shall serve as an NPDES permit for point source discharges from this facility to surface waters.

This Order also serves as Waste Discharge Requirements (WDRs) for land discharges of irrigated effluent pursuant to article 4, chapter 4, division 7 of the Water Code (commencing with section 13260).

D. Background and Rationale for Requirements.

The Regional Water Board developed the requirements in this Order based on information submitted as part of the application, through monitoring and reporting programs, and other available information. The Fact Sheet (Attachment F), which contains background information and rationale for Order requirements, is hereby incorporated into this Order and constitutes part of the Findings for this Order. Attachments A through E and G are also incorporated into this Order

E. California Environmental Quality Act (CEQA).

Under Water Code section 13389, this action to adopt an NPDES permit is exempt from the provisions of CEQA, Public Resources Code sections 21100 - 21177.

This action also involves the adoption of a WDRs for irrigation of treated effluent. For the portion of the permit that addresses WDRs for discharges to land, the Regional Water Board has prepared a notice of exemption that the project is categorically exempt from CEQA pursuant to title 14, section 15301 of the Cal. Code of Regs. Because the Regional Water Board is issuing the WDRs for discharges from an existing facility for which no expansion of design flow is being permitted, this project meets the requirements of the categorical exemption, including the requirements set forth in section 15300.2 that the project not have any significant effects or result in cumulative impacts. For any expansion of the land disposal/reclamation areas, the Discharger will be the lead agency for CEQA.

F. Technology-Based Effluent Limitations.

Section 301(b) of the CWA and implementing USEPA permit regulations at section 122.44, title 40 of the Code of Federal Regulations[1], require that permits include, at a minimum, conditions meeting applicable technology-based requirements and any more stringent effluent limitations necessary to meet applicable water quality standards. Discharges authorized by this Order must meet minimum federal technology-based requirements based on Secondary Treatment Standards established at title 40, Part 133 and/or Best Professional Judgment (BPJ) in accordance with title 40, section 125.3. A detailed discussion of development of technology-based effluent limitations is included in the Fact Sheet (Attachment F).

G. Water Quality-Based Effluent Limitations.

Section 301(b) of the CWA and section 122.44(d) require that permits include limitations more stringent than applicable federal technology-based requirements where necessary to achieve applicable water quality standards.

Section 122.44(d)(1)(i) mandates that permits include effluent limitations for all pollutants that are or may be discharged at levels that have the reasonable potential to cause or contribute to an exceedence of a water quality standard, including numeric and narrative objectives within a standard. Where reasonable potential has been established for a pollutant, but there is no numeric criterion or objective for the pollutant, water quality-based effluent limitations (WQBELs) must be established using: (1) USEPA criteria guidance under CWA section 304(a), supplemented where necessary by other relevant information; (2) an indicator parameter for the pollutant of concern; or (3) a calculated numeric water quality criterion, such as a proposed state criterion or policy interpreting the state's

[1] All further statutory references are to title 40 of the Code of Federal Regulations unless otherwise indicated.

narrative criterion, supplemented with other relevant information, as provided in section 122.44(d)(1)(vi).

H. Water Quality Control Plans.

The Regional Water Board adopted a Water Quality Control Plan for the North Coast Region (hereinafter Basin Plan) that designates beneficial uses, establishes water quality objectives, and contains implementation programs and policies to achieve those objectives for all waters addressed through the plan. The Basin Plan at page 2-1 states that the beneficial uses of any specifically identified water body generally apply to its tributary streams. The Basin Plan does not specifically identify beneficial uses for Francis Creek or the Salt River, but does identify present and potential uses for the Eel River, to which Francis Creek and the Salt River are tributary. In addition, the Basin Plan implements State Water Resources Control Board (State Water Board) Resolution No. 88-63, which established state policy that all waters, with certain exceptions, should be considered suitable or potentially suitable for municipal or domestic supply. Beneficial uses applicable to receiving waters for discharges from the City of Ferndale WWTF are described in Table 5, below.

Table 5. Basin Plan Beneficial Uses

	Receiving Water Name Discharge Points	
Beneficial Use (s)	Francis Creek/ Salt River 001	Groundwater 002
Municipal and Domestic Water Supply (MUN)	E	E
Agricultural Supply (AGR)	E	E
Industrial Service Supply (IND)	E	E
Industrial Process Supply (PRO)	P	P
Groundwater Recharge (GWR)	E	
Freshwater Replenishment (FRESH)	E	
Navigation (NAV)	E	
Hydropower Generation (POW)	P	
Water Contact Recreation (REC-1)	E	
Non-contact Water Recreation (REC-2)	E	
Commercial and Sport Fishing (COMM)	E	
Cold Freshwater Habitat (COLD)	E	
Wildlife Habitat (WILD)	E	
Preservation of Rare, Threatened or Endangered Species (RARE)	E	
Marine Habitat (MAR)	P	
Migration of Aquatic Organisms (MIGR)	E	
Spawning, Reproduction, and/or Early Development (SPWN)	E	
Shellfish Harvesting (SHELL)	E	
Estuarine habitat (EST)	E	
Aquaculture (AQUA)	P	P
Native American Culture (CUL)	E	E
Subsistence Fishing (FISH)	E	

Requirements of this Order implement the Basin Plan.

In June 2007, the USEPA provided final approval of the list of impaired water bodies prepared by the State pursuant to CWA section 303 (d), which requires identification of specific water bodies where it is expected that water quality standards will not be met after implementation of technology-based effluent limitations on point sources. The Eel River Delta within the Lower Eel Hydrologic Area is 303 (d) listed as impaired by sedimentation/siltation and temperature. Pursuant to CWA section 303 (d), the Regional Water Board must adopt Total Maximum Daily Loads (TMDLs), to address impairing pollutants in 303 (d) listed waters, and then implement TMDLs in NPDES permits. TMDLs establish the maximum quantity of a given pollutant that can be added to a water body from all sources without exceeding the applicable water quality standard for that pollutant and determine wasteload allocations (the portion of a TMDL allocated to existing and future point sources) for point sources and load allocations (the portion of a TMDL attributed to existing and future nonpoint sources) for nonpoint sources.

In December 2007, US EPA established a technical TMDL for sediment and temperature in the Lower Eel River. This Order is consistent with the technical TMDL.

I. National Toxics Rule (NTR) and California Toxics Rule (CTR).

USEPA adopted the NTR on December 22, 1992, and later amended it on May 4, 1995 and November 9, 1999. About forty criteria in the NTR applied in California. On May 18, 2000, USEPA adopted the CTR. The CTR promulgated new toxics criteria for California and, in addition, incorporated the previously adopted NTR criteria that were applicable in the state. The CTR was amended on February 13, 2001. These rules contain water quality criteria for priority pollutants.

J. State Implementation Policy.

On March 2, 2000, the State Water Board adopted the Policy for Implementation of Toxics Standards for Inland Surface Waters, Enclosed Bays, and Estuaries of California (State Implementation Policy or SIP). The SIP became effective on April 28, 2000 with respect to the priority pollutant criteria promulgated for California by the USEPA through the NTR and to the priority pollutant objectives established by the Regional Water Board in the Basin Plan. The SIP became effective on May 18, 2000 with respect to the priority pollutant criteria promulgated by the USEPA through the CTR. The State Water Board adopted amendments to the SIP on February 24, 2005 that became effective on July 13, 2005. The SIP establishes implementation provisions for priority pollutant criteria and objectives and provisions for chronic toxicity control. Requirements of this Order implement the SIP.

K. Compliance Schedules and Interim Requirements.

Section 2.1 of the SIP provides that, based on a Discharger's request and demonstration that it is infeasible for an existing Discharger to achieve immediate compliance with an

effluent limitation derived from a CTR criterion, compliance schedules may be allowed in an NPDES permit. Unless an exception has been granted under section 5.3 of the SIP, a compliance schedule may not exceed 5 years from the date that the permit is issued or reissued, nor may it extend beyond 10 years from the effective date of the SIP (or May 18, 2010) to establish and comply with CTR criterion-based effluent limitations. Where a compliance schedule for a final effluent limitation exceeds 1 year, the Order must include interim numeric limitations for that constituent or parameter. Where allowed by the Basin Plan, compliance schedules and interim effluent limitations or discharge specifications may also be granted to allow time to implement a new or revised water quality objective. This Order does not include compliance schedules or interim effluent limitations.

L. Alaska Rule.

On March 30, 2000, USEPA revised its regulation that specifies when new and revised state and tribal water quality standards (WQS) become effective for CWA purposes. [40 C.F.R. § 131.21; 65 Fed. Reg. 24641 (April 27, 2000)] Under the revised regulation (also known as the Alaska Rule), new and revised standards submitted to USEPA after May 30, 2000, must be approved by USEPA before being used for CWA purposes. The final rule also provides that standards already in effect and submitted to USEPA by May 30, 2000 may be used for CWA purposes, whether or not approved by USEPA.

M. Stringency of Requirements for Individual Pollutants.

This Order contains both technology-based and water quality-based effluent limitations for individual pollutants. The technology-based effluent limitations consist of restrictions on pH, biochemical oxygen demand (BOD5), total suspended solids (TSS), and settleable solids. Restrictions on these pollutants are discussed in section IV. B of the Fact Sheet. This Order's technology-based pollutant restrictions implement the minimum, applicable federal technology-based requirements. In addition, this Order contains effluent limitations more stringent than the minimum, federal technology-based requirements that are necessary to meet water quality standards.

Water quality-based effluent limitations have been scientifically derived to implement water quality objectives that protect beneficial uses. Both the beneficial uses and the water quality objectives have been approved pursuant to federal law and are the applicable federal water quality standards. To the extent that toxic pollutant water quality-based effluent limitations were derived from the CTR, the CTR is the applicable standard pursuant to section 131.38. The scientific procedures for calculating the individual water quality-based effluent limitations for priority pollutants are based on the CTR-SIP, which was approved by USEPA on May 18, 2000. All beneficial uses and water quality objectives contained in the Basin Plan were approved under state law and submitted to and approved by USEPA prior to May 30, 2000. Any water quality objectives and beneficial uses submitted to USEPA prior to May 30, 2000, but not approved by USEPA before that date, are nonetheless "applicable water quality standards for purposes of the

CWA" pursuant to section 131.21(c)(1). Collectively, this Order's restrictions on individual pollutants are no more stringent than required to implement the requirements of the CWA.

The Regional Water Board has considered the factors in Water Code section 13263, including the provisions of Water Code section 13241, in establishing these requirements.

N. Antidegradation Policy.

Section 131.12 requires that the state water quality standards include an antidegradation policy consistent with the federal policy. The State Water Board established California's antidegradation policy in State Water Board Resolution No. 68-16. Resolution No. 68-16 incorporates the federal antidegradation policy where the federal policy applies under federal law. Resolution No. 68-16 requires that existing quality of waters be maintained unless degradation is justified based on specific findings. The Regional Water Board's Basin Plan implements, and incorporates by reference, both the state and federal antidegradation policies. As discussed in detail in the Fact Sheet the permitted discharge is consistent with the antidegradation provision of section 131.12 and State Water Board Resolution No. 68-16.

O. Anti-Backsliding Requirements.

Sections 402(o)(2) and 303(d)(4) of the CWA and federal regulations at title 40, Code of Federal Regulations section 122.44(l) prohibit backsliding in NPDES permits. These anti-backsliding provisions require effluent limitations in a reissued permit to be as stringent as those in the previous permit, with some exceptions where limitations may be relaxed. All effluent limitations in this Order are at least as stringent as the effluent limitations in the previous Order.

P. Endangered Species Act.

This Order does not authorize any act that can result in the taking of a threatened or endangered species or any act that is now prohibited, or becomes prohibited in the future, under either the California Endangered Species Act (Fish and Game Code sections 2050 to 2097) or the Federal Endangered Species Act (16 U.S.C.A. sections 1531 to 1544). This order requires compliance with effluent limits, receiving water limits, and other requirements to protect the beneficial uses of waters of the state. The discharger is responsible for meeting all requirements of the applicable Endangered Species Act.

Q. Monitoring and Reporting.

Section 122.48 requires that all NPDES permits specify requirements for recording and reporting monitoring results. Water Code sections 13267 and 13383 authorizes the Regional Water Board to require technical and monitoring reports. The Monitoring and Reporting Program establishes monitoring and reporting requirements to implement

federal and State requirements. This Monitoring and Reporting Program is provided in Attachment E.

R. Standard and Special Provisions.

Standard Provisions, which apply to all NPDES permits in accordance with section 122.41, and additional conditions applicable to specified categories of permits in accordance with section 122.42, are provided in Attachment D. The Discharger must comply with all standard provisions and with those additional conditions that are applicable under section 122.42. The Regional Water Board has also included in this Order special provisions applicable to the Discharger. Rationale for the special provisions contained in this Order is provided in the attached Fact Sheet.

S. Provisions and Requirements Implementing State Law.

The provisions/requirements in subsections IV. D. and V. B. of this Order are included to implement state law only. These provisions/requirements are not required or authorized under the federal CWA; consequently, violations of these provisions/requirements are not subject to the enforcement remedies that are available for NPDES violations.

T. Notification of Interested Parties.

The Regional Water Board has notified the Discharger and interested agencies and persons of its intent to prescribe Waste Discharge Requirements for the discharge and has provided them with an opportunity to submit their written comments and recommendations. Details of notification are provided in the Fact Sheet of this Order.

U. Consideration of Public Comment.

The Regional Water Board, in a public meeting, heard and considered all comments pertaining to the discharge. Details of the Public Process are provided in the Fact Sheet of this Order.

III. DISCHARGE PROHIBITIONS

A. The discharge of any waste not disclosed by the Discharger or not within the reasonable contemplation of the Regional Water Board is prohibited.

B. Creation of pollution, contamination, or nuisance, as defined by section 13050 of the California Water code is prohibited.

C. The discharge of sludge or digester supernatant is prohibited, except as authorized under VI. C. 5. c of this Order (Solids Disposal and Handling Requirements).

D. The discharge or reclamation use of untreated or partially treated waste (receiving a lower level of treatment than described in section II. A of the Fact Sheet) from anywhere within the collection, treatment, or disposal systems is prohibited, except as provided for in Prohibition III. E and in Attachment D, Standard Provision G (Bypass).

E. Any sanitary sewer overflow (SSO) that results in a discharge of untreated or partially treated wastewater to (a) waters of the State, (b) groundwater, or (c) land that creates pollution, contamination, or nuisance, as defined in Water Code section 13050 (m) is prohibited.

F. The discharge of waste to land that is not owned by or under agreement to use by the Discharger is prohibited, except for use for fire suppression as provided in title 22, sections 60307 (a) and (b) of the Cal. Code of Regs.

G. The discharge of waste at any point not described in Finding II. B or authorized by a permit issued by the State Water Board or another Regional Water Board is prohibited.

H. The discharge of treated wastewater to the Eel River and its tributaries is prohibited during the period from May 15 through September 30 of each year.

IV. EFFLUENT LIMITATIONS AND DISCHARGE SPECIFICATIONS

A. Effluent Limitations for New WWTF – Discharge Point 001

1. Effluent Limitations – Discharge Point 001

a. Thirty days prior to activation of the new WWTF described under paragraph two of Finding II.B. the Discharger shall submit written notification to the Executive Officer declaring intent to operate and discharge from the new WWTF. Ninety (90) days after the initial activation of the new WWTF, the Discharger shall maintain compliance with the following effluent limitations at Discharge Point 001, with compliance measured at Monitoring Location EFF-001 as described in the attached Monitoring and Reporting Program (MRP).

Table 6. Effluent Limitations for New WWTF – Discharge Point 001

Parameter	Units	Effluent Limitations for New WWTF – Discharge Point 001				
		Average Monthly[2]	Average Weekly	Maximum Daily	Instantaneous Minimum	Instantaneous Maximum
Biochemical Oxygen Demand 5-day @ 20°C	mg/L	10	15	---	---	---
	lbs/day[3,4]	79	119	---	---	---
Total Suspended Solids	mg/L	10	15	---	---	---
	lbs/day[3 4]	79	119	---	---	---
Settleable Solids	ml/L	0.1	---	0.2		
Total Coliform Organisms	MPN/100 ml	23 [5]	---	230	---	---
pH	standard units	---	---	---	6.5	8.5
Ammonia	mg/L	1.0	---	---	---	---
Nitrate	mg/L	10	---	---	---	---
Total Nitrogen	mg/L	10	---	---	---	---
Copper[6]	µg/L	4.0	---	8.0	---	---
Lead [6]	µg/L	1.2	---	2.4	---	---
Mercury	µg/L	0.05	---	0.10	---	---
Nickel [6]	µg/L	26	---	52	---	---
Zinc [6]	µg/L	36	---	72	---	---
2,3,7,8 TCDD	µg/L	0.000000013	---	0.000000026	---	---
Chlorodibromomethane	µg/L	0.401	---	0.804	---	---
Dichlorobromomethane	µg/L	0.56	---	1.1	---	---
Bis(2-Ethylhexyl)# Phthalate	µg/L	1.8	---	3.6	---	---
alpha-BHC	µg/L	0.0039	---	0.0078	---	---
Heptachlor Epoxide	µg/L	0.0001	---	0.0002	---	---

[2] See Attachment A for definitions

[3] The mass discharge (lbs/day) is obtained from the following calculation for any calendar week or month:

$$\frac{8.34}{N}\sum_{i}^{N} Q_i C_i$$

in which N is the number of samples analyzed in any calendar week or month. Q_i and C_i are the flow rate (mgd) and the constituent concentration (mg/L), respectively, which are associated with each of the N grab samples, which may be taken in any calendar week or month. If a composite sample is taken, C_i is the concentration measured in the composite sample; and Q_i is the average flow rate occurring during the period over which samples are composited.

[4] Mass-based effluent limitations are based on the peak wet weather design flow of 0.95 mgd.

[5] The median of all samples collected in a 30-day calendar period.

[6] Final effluent limitations for this metal are dependent on the hardness of the receiving water and shall be determined at each time that effluent is monitored in accordance with Table E-9 contained in Appendix E of the Order.

b. Percent Removal. The average monthly percent removal of BOD_5 and TSS shall not be less than 85 percent. Percent removal shall be determined from the 30-day average value of influent wastewater concentration in comparison to the 30-day average value of effluent concentration for the same constituent over the same time period as measured at Monitoring Locations M-INF and EFF-001, respectively.

c. Discharge Rate. During the period from October 1 through May 14, discharges of treated wastewater shall not exceed one-hundred percent (1:1) of the upstream receiving water flow.

d. Flow. The mean daily dry weather flow of waste through the treatment plant shall not exceed 0.55 mgd, measured over a calendar month. The average wet weather flow of waste through the treatment plant shall not exceed 0.95 mgd, measured daily and averaged over a calendar month.

e. Acute Toxicity. There shall be no acute toxicity in treated wastewater discharged to the Eel River and its tributaries. The Discharger will be considered compliant with this limitation when the survival of aquatic organisms in a 96-hour bioassay of undiluted effluent complies with the following.

1. Minimum for any one bioassay: 70 percent survival

2. Median for any three or more consecutive bioassays: at least 90 percent survival.

Compliance with the acute toxicity effluent limitation shall be determined in accordance with section V of the Monitoring and Reporting Program (Attachment E) of this Order.

B. Effluent Limitations for Existing WWTF – Discharge Point 001

2. Effluent Limitations for Existing WWTF – Discharge Point 001

a. For the duration of operation of the existing WWTF as well as during the initial 90 day start-up period after activation of the new WWTF, the Discharger shall maintain compliance with the following limitations at Discharge Point 001, with compliance measured at Monitoring Location EFF-001 as described in the attached MRP. These effluent limitations shall apply in lieu of the corresponding effluent limitations specified for the same parameters that will take effect upon activation of the new WWTF.

Table 7. Effluent Limitations for Existing WWTF– Discharge Point 001

Parameter	Units	Effluent Limitations for Existing WWTF – Discharge Point 001				
		Average Monthly[2]	Average Weekly	Maximum Daily	Instantaneous Minimum	Instantaneous Maximum
Biochemical Oxygen Demand 5-day @ 20°C	mg/L	30	45	---	---	---
	lbs/day[3 4]	144	216	---	---	---
Total Suspended Solids	mg/L	44	66	---	---	---
	lbs/day[3 4]	211	317	---	---	---
Settleable Solids	ml/L	0.1	---	0.2		
Total Coliform Organisms	MPN/100 ml	23 [5]	---	230	---	---
pH	standard units	---	---	---	6.5	8.5
Chlorine Residual	mg/L	0.01	---	0.02	---	---
Copper[6]	µg/L	4.0	---	8.0	---	---
Lead [67]	µg/L	1.2	---	2.4	---	---
Mercury	µg/L	0.05	---	0.10	---	---
Nickel[6 7]	µg/L	26	---	52	---	---
Zinc [6]	µg/L	36	---	72	---	---
2,3,7,8 TCDD	µg/L	0.000000013	---	0.000000026	---	---
Chlorodibromomethane	µg/L	0.401	---	0.804	---	---
Dichlorobromomethane	µg/L	0.56	---	1.1	---	---
Bis(2-Ethylhexyl)# Phthalate	µg/L	1.8	---	3.6	---	---
alpha-BHC	µg/L	0.0039	---	0.0078	---	---
Heptachlor Epoxide	µg/L	0.0001	---	0.0002	---	---

b. **Percent Removal.** The average monthly percent removal of BOD_5 and TSS shall not be less than 65 percent. Percent removal shall be determined from the 30-day average value of influent wastewater concentration in comparison to the 30-day average value of effluent concentration for the same constituent over the same time period as measured at Monitoring Locations M-INF and EFF-001, respectively.

c. **Discharge Rate.** During the period from October 1 through May 14, discharges of treated wastewater shall not exceed one percent (1:100) of the receiving water flow.

d. **Flow.** The mean daily dry weather flow of waste through the treatment plant shall not exceed 0.576 mgd, measured daily and averaged over a calendar month. The average annual flow of waste through the treatment plant shall not exceed 0.95 mgd, measured daily and averaged over a calendar year.

e. Acute Toxicity. There shall be no acute toxicity in treated wastewater discharged to the Eel River and its tributaries. The Discharger will be considered compliant with this limitation when the survival of aquatic organisms in a 96-hour bioassay of undiluted effluent complies with the following:

1. Minimum for any one bioassay: 70 percent survival

3. Median for any three or more consecutive bioassays: at least 90 percent survival.

Compliance with the acute toxicity effluent limitation shall be determined in accordance with section V of the Monitoring and Reporting Program (Attachment E) of this Order.

C. Land Discharge Specifications

This section of the Order is not applicable as this Order does not permit treated wastewater to be land applied for the purpose of disposal. The Order does include Reclamation Specifications, below, which are applicable to reclamation/irrigation uses of treated wastewater.

D. Reclamation Specifications – Discharge Point 002

1. Reclamation / Recycling Requirements: The Discharger shall comply with applicable state and local requirements regarding the production and use of reclaimed wastewater, including requirements of California Water Code (Water Code) sections 13500 – 13577 (Water Reclamation) and Department of Health Services (DHS) regulations at title 22, sections 60301 – 60357 of the Cal. Code of Regs (Water Recycling Criteria).

a. The use of recycled water shall not create a condition of pollution or nuisance as defined in Water Code section 13050(m).

b. Recycled water and airborne spray shall not be allowed to escape from the authorized recycled water use area(s).

c. Direct or windblown spray, mist, or runoff from irrigation areas shall not enter dwellings, designated outdoor eating areas, or food handling facilities.

d. Disinfected secondary treated recycled water shall not be irrigated within 100 feet of any domestic water supply well or domestic water supply surface intake, unless the technical requirements specified in title 22, Cal. Code of Regs., section 60310(a) have been met and approved by DHS.

e. All areas where recycled water is used that are accessible to the public shall be posted with signs that are visible to the public, in a size no less than 4 inches

high by 8 inches wide, and that include the following wording: 'RECYCLED WATER – DO NOT DRINK'. Each sign shall display an international symbol similar to that shown in title 22, Cal. Code of Regs, Figure 60310-A. These warning signs shall be posted at least every 500 feet with a minimum of a sign at each corner and access road.

2. The Discharger shall maintain compliance with the following effluent limitations at Discharge Point 002, with compliance measured at Monitoring Location EFF-002 as described in the attached Monitoring and Reporting Program (MRP).

Table 8. Reclamation Discharge Specifications – Discharge Point 002

Parameter	Units	Discharge Specification - 002		
		Average Monthly	Average Weekly	Maximum Daily
Biochemical Oxygen Demand 5-day @ 20°C	mg/L	30	---	---
Total Suspended Solids	mg/L	30	---	---
Settleable Solids	mL/L-hr	0.1	---	0.2
Total Coliform Organisms	MPN/100 mL	23[5]	---	230

E. Other Requirements

1. Disinfection Process Requirements for Ultraviolet (UV) Disinfection System. Upon completion and testing of the UV disinfection system, the Discharger shall operate the UV disinfection system in accordance with the following operating protocol in order to demonstrate compliance with Effluent Limitations contained in this Order.

a. Disinfection of tertiary treated wastewater shall be accomplished using a disinfection process that, when combined with the filtration process, has been demonstrated to inactivate and/or remove 99.999 percent of the plaque-forming units of F-specific bacteriophage MS2, or polio virus in the wastewater. A virus that is at least as resistant to disinfection as polio virus may be used for purposes of the demonstration. A demonstration of system effectiveness shall be performed on-site at the Discharger's WWTF at both maximum and minimum plant flows.

b. The Discharger shall provide continuous, reliable monitoring of flow, UV transmittance, UV intensity, UV dose, UV power, and turbidity.

c. The Discharger shall operate the UV disinfection system to provide a minimum UV dose of 100 millijoules per square centimeter (mJ/cm2) at all times, unless otherwise approved by the Executive Officer.

d. The UV transmittance (at 254 nanometers) in the wastewater shall not fall below 55 percent of maximum at any time, unless otherwise approved by the Executive Officer.

e. The quartz sleeves and cleaning system components shall be visually inspected per the manufacturer's operation manual for physical wear (scoring, solarization, seal leaks, etc.) and to check the efficacy of the cleaning system.

f. The quartz sleeves shall be cleaned at fixed intervals to ensure the minimum required UV dose delivery is consistently achieved. Cleaning intervals shall be established based on the presence of coliform organisms.

g. Lamps shall be replaced per the manufacturer's recommendation, or sooner, if there are indications the lamps are failing to provide adequate disinfection. Lamp age and lamp replacement records must be maintained onsite and made available for inspection by Regional Water Board staff upon request.

h. The UV disinfection system shall be operated in accordance with an operations and maintenance plan approved by the Regional Water Board Executive Officer.

2. **Storage Ponds.** Ponds used for wet weather influent equalization and/or storage of treated wastewater shall be constructed in a manner that protects groundwater. The Discharger shall submit design proposals for new wastewater storage ponds to the Regional Water Board for review prior to construction and demonstrate that the pond design incorporates features to protect groundwater from exceeding groundwater quality objectives.

V. RECEIVING WATER LIMITATIONS

A. Surface Water Limitations

Receiving water limitations are based on water quality objectives contained in the Basin Plan and are a required part of this Order. Compliance with receiving water limitations shall be measured at monitoring locations described in the MRP (Attachment E). Discharges from the City of Ferndale WWTF shall not cause the following.

1. The discharge shall not cause the dissolved oxygen concentration of the receiving waters to be depressed below 7.0 mg/L. Additionally, the discharge shall not cause the dissolved oxygen content of the receiving water to fall below 10.0 mg/L more than 50 percent of the time, or below 7.5 mg/L more than 10 percent of the time. In the event that the receiving waters are determined to have dissolved oxygen concentration of less than 7.0 mg/L, the discharge shall not depress the dissolved oxygen concentration below the existing level.

2. The discharge shall not cause the specific conductance (micromhos[7]) concentration of the receiving waters to increase above 225 micromhos 50 percent of the time, or above 375 micromhos more than 10 percent of the time.

3. The discharge shall not cause the total dissolved solids concentration of the receiving waters to increase above 140 mg/l more than 50 percent of the time, or above 275 mg/l more than 10 percent of the time.

4. The discharge shall not cause the pH of the receiving waters to be depressed below 6.5 nor raised above 8.5. Within this range, the discharge shall not cause the pH of the receiving waters to be changed at any time more than 0.5 units from normal ambient pH levels. If the pH of the receiving water is less than 6.5, the discharge shall not cause a further depression of the pH of the receiving water. If the pH of the receiving water is greater than 8.5, the discharge shall not cause a further increase in the pH of the receiving water.

5. The discharge shall not cause turbidity of receiving waters to be increased more than 20 percent above naturally occurring background levels.

6. The discharge shall not cause receiving waters to contain floating materials, including solids, liquids, foams, and scum, in concentrations that cause nuisance or adversely affect beneficial uses.

7. The discharge shall not cause receiving waters to contain taste or odor producing substances in concentrations that impart undesirable tastes or odors to fish flesh or other edible products of aquatic origin, that cause nuisance, or` that adversely affect beneficial uses.

8. The discharge shall not cause coloration of receiving waters that causes nuisance or adversely affects beneficial uses.

9. The discharge shall not cause bottom deposits in receiving waters to the extent that such deposits cause nuisance or adversely affect beneficial uses.

10. The discharge shall not cause or contribute concentrations of biostimulants to the receiving water that promote objectionable aquatic growth to the extent that such growth causes nuisance or adversely affects beneficial uses.

11. The discharge shall not cause receiving waters to contain toxic substances in concentrations that are toxic to, or that produce detrimental physiological responses in humans, plants, animals, or aquatic life. Compliance with this objective will be determined by use of indicator organisms, analyses of species diversity, population density, growth anomalies, bioassays of appropriate duration, or other appropriate methods, as specified by the Regional Water Board.

12. The discharge shall not cause receiving water temperature to increase by more than 5º F above natural receiving water temperature at any time.

[7] Measured at 77º F.

13. The discharge shall not cause an individual pesticide or combination of pesticides to be present in concentrations that adversely affect beneficial uses. The discharge must not cause bioaccumulation of pesticide, fungicide, wood treatment chemical, or other toxic pollutant concentrations in bottom sediments or aquatic life to levels which are harmful to human health.

14. The discharge shall not cause the receiving waters to contain concentrations of pesticides in excess of the limiting concentrations set forth in Table 3-2 of the Basin Plan. The discharge shall not cause the receiving waters to contain concentrations of pesticides in excess of the limiting concentrations established as Maximum Contaminant Levels by the Department of Health Services in title 22, Cal. Code of Regs, section 64444.

15. The discharge shall not cause receiving waters to contain oils, greases, waxes, or other materials in concentrations that result in a visible film or coating on the surface of the water or on objects in the water, that cause nuisance, or that otherwise affect beneficial uses.

16. The discharge shall not cause a violation of any applicable water quality standard for receiving waters adopted by the Regional Water Board or the State Water Board, as required by the federal Clean Water Act and regulations adopted thereunder. If more stringent applicable water quality standards are promulgated or approved pursuant to section 303 of the Clean Water Act, or amendments thereto, the Regional Water Board will revise and modify this Order in accordance with such more stringent standards.

17. The discharge shall not cause concentrations of chemical constituents to occur in excess of limits specified in Table 3-2 of the Basin Plan or in excess of more stringent Maximum Contaminant Levels (MCLs) established for these pollutants in title 22, Cal. Code of Regs. Division 4, Chapter 15, Articles 4 and 5.

B. Groundwater Limitations

The collection, storage, and use of wastewater or recycled water shall not cause or contribute to a statistically significant degradation of groundwater quality, cause exceedence of applicable water quality objectives or create adverse impacts to beneficial uses of groundwater.

VI. PROVISIONS

A. Standard Provisions

1. **Federal Standard Provisions.** The Discharger shall comply with all Standard Provisions included in Attachment D of this Order.

2. **Regional Water Board Standard Provisions.** The Discharger shall comply with the following provisions.

a. Failure to comply with provisions or requirements of this Order, or violation of other applicable laws or regulations governing discharges from this facility, may subject the Discharger to administrative or civil liabilities, criminal penalties, and/or other enforcement remedies to ensure compliance. Additionally, certain violations may subject the Discharger to civil or criminal enforcement from appropriate local, state, or federal law enforcement entities.

b. In the event the Discharger does not comply or will be unable to comply for any reason, with any prohibition, interim or final effluent limitation, land discharge specification, reclamation specification, receiving water limitation, or provision of this Order that may result in a significant threat to human health or the environment, such as inundation of treatment components, breach of pond containment, sanitary sewer overflow, irrigation runoff, etc., that results in a discharge to a drainage channel or a surface water, the Discharger shall as soon as possible, but no later than two (2) hours after becoming aware of the discharge, orally[8] notify the State Office of Emergency Services, the local health officer or directors of environmental health with jurisdiction over the affected water bodies, and the Regional Water Board.

c. As soon as possible, but no later than twenty-four (24) hours after becoming aware of a discharge to a drainage channel or a surface water, the Discharger shall submit to the Regional Water Board a written certification that the State Office of Emergency Services and the local health officer or directors of environmental health with jurisdiction over the affected water body have been notified of the discharge. Written documentation of the circumstances of the spill event shall be submitted to the Regional Water Board within five (5) days, unless the Regional Water Board waives the confirmation. The written notification shall state the nature, time, duration, and cause of noncompliance, and shall describe the measures being taken to remedy the current noncompliance and to prevent recurrence, including, where applicable, a schedule of implementation. Other types of noncompliance require written notification, as described above, at the time of the normal monitoring report.

d. Prior to making any change in the point of discharge, place of use, or purpose of use of treated wastewater that results in a decrease of flow in any portion of a watercourse, the Discharger must file a petition with the State Water Board, Division of Water Rights, and receive approval for such a change. (Water Code § 1211)

---

[8] Oral reporting means direct contact with a Regional Water Board staff person. The oral report may be given in person or by telephone. After business hours, oral contact must be made by calling the State Office of Emergency Services or Regional Water Board spill officer.

B. Monitoring and Reporting Program (MRP) Requirements

The Discharger shall comply with the MRP, and future revisions thereto, in Attachment E of this Order.

C. Special Provisions

1. Reopener Provisions

a. **Standard Revisions.** If applicable water quality standards are promulgated or approved pursuant to section 303 of the CWA, or amendments thereto, the Regional Water Board may reopen this Order and make modifications in accordance with such revised standards.

b. **Reasonable Potential.** This Order may be reopened for modification to include an effluent limitation if monitoring establishes that the discharge causes, has the reasonable potential to cause, or contributes to an excursion above an applicable water quality objective.

c. **Whole Effluent Toxicity.** As a result of a Toxicity Reduction Evaluation (TRE), this Order may be reopened to include a chronic toxicity limitation and/or a limitation for a specific toxic pollutant identified by a TRE. In addition, if a numeric water quality objective for chronic toxicity is adopted by the State Water Board, this Order may be reopened to include an effluent limitation for chronic toxicity based on that objective.

d. **303 (d) Listed Pollutants**. If a TMDL is adopted and is applicable to receiving waters for this discharge, this Order may be reopened to incorporate requirements of the TMDL. If the Regional Water Board determines that a voluntary offset program is feasible for and desired by the Discharger, then this Order may be reopened to reevaluate the effluent limitations for the pollutant or pollutants addressed by the TMDL and, if appropriate, to incorporate provisions recognizing the Discharger's participation in an offset program.

e. **Special Studies.** If a wastewater reclamation / recycled water evaluation, water effect ratio, mixing zone or other water quality study provides new information and a basis for determining that a permit condition or conditions should be modified, the Regional Water Board may reopen this Order and make modifications in accordance with title 40, section 122.62.

f. **Recycled Water Policy**. The State Water Board is developing a statewide policy for recycled water. If the policy includes requirements and/or limitations for salts, nutrients, or other constituents for which water quality objectives exist for the protection of drinking water supplies, this Order may be reopened and

modified to include appropriate requirements and/or effluent limitations, as necessary, to require compliance with the policy.

g. Nutrients. This Order contains effluent limitations for ammonia and nitrate. If new water quality objectives for nutrients are established, or if monitoring data indicate the need for more stringent effluent limitations for these or other nutrient parameters, this Order may be reopened and modified to include new or modified effluent limitations, as necessary.

2. Special Studies, Technical Reports and Additional Monitoring Requirements

a. Toxicity Reduction Requirements

(1) Whole Effluent Toxicity. In addition to an effluent limitation for whole effluent acute toxicity, the Monitoring and Reporting Program (MRP) of this Order requires routine monitoring for whole effluent chronic toxicity to determine compliance with the Basin Plan's narrative water quality objective for toxicity. As established by the MRP, if either the effluent limitation for acute toxicity or a monitoring trigger of 1.0 TUc (where 1 TUc = 100/NOEC) for chronic toxicity is exceeded, the Discharger shall conduct accelerated toxicity monitoring, as specified in section V of the MRP. Results of accelerated toxicity monitoring will indicate a need to conduct a Toxicity Reduction Evaluation (TRE), if toxicity persists; or it will indicate that a return to routine toxicity monitoring is justified because persistent toxicity has not been identified by accelerated monitoring.

(2) Toxicity Reduction Evaluations (TRE) Workplan. The Discharger prepared and submitted to the Regional Water Board Executive Officer, a TRE Workplan in November 2008. This requirement may be met using the existing TRE Workplan which meets the criteria contained in this section. This plan shall be reviewed and updated as necessary in order to remain current and applicable to the discharge and discharge facilities. The workplan shall describe the steps the Discharger intends to follow if toxicity is detected, and should include at least the following items:

(a) A description of the investigation and evaluation techniques that would be used to identify potential causes and sources of toxicity, effluent variability, and treatment system efficiency.

(b) A description of the facility's methods of maximizing in house treatment efficiency and good housekeeping practices.

(c) If a toxicity identification evaluation (TIE) is necessary, an indication of the person who would conduct the TIEs (i.e., an in house expert or an outside contractor).

(3) Toxicity Reduction Evaluation (TRE). The TRE shall be conducted in accordance with the following:

(a) The TRE shall be initiated within 30 days of the date of completion of the accelerated monitoring test, required by section V of the MRP, observed to exceed either the acute or chronic toxicity parameter.

(b) The TRE shall be conducted in accordance with the Discharger's workplan.

(c) The TRE shall be in accordance with current technical guidance and reference material including, at a minimum, the USEPA manual EPA/833B 99/002.

(d) The TRE may end at any stage if, through monitoring results, it is determined that there is no longer consistent toxicity.

(e) The Discharger may initiate a TIE as part of the TRE process to identify the cause(s) of toxicity. As guidance, the Discharger shall use the USEPA acute and chronic manuals, EPA/600/6-91/005F (Phase I), EPA/600/R-92/080 (Phase II), and EPA-600/R-92/081 (Phase III).

(f) As toxic substances are identified or characterized, the Discharger shall continue the TRE by determining the source(s) and evaluating alternative strategies for reducing or eliminating the substances from the discharge. All reasonable steps shall be taken to reduce toxicity to levels consistent with chronic toxicity parameters.

(g) Many recommended TRE elements accompany required efforts of source control, pollution prevention, and storm water control programs. TRE efforts should be coordinated with such efforts. To prevent duplication of efforts, evidence of complying with requirements of recommendations of such programs may be acceptable to comply with requirements of the TRE.

(h) The Regional Water Board recognizes that chronic toxicity may be episodic and identification of a reduction of sources of chronic toxicity may not be successful in all cases. Consideration of enforcement action by the Regional Water Board will be based in part on the Discharger's actions and efforts to identify and control or reduce sources of consistent toxicity.

b. Wastewater Reclamation Evaluation

The Discharger shall prepare and submit for Executive Officer approval a workplan to evaluate its Water Reclamation System. The Program shall be of

sufficient scope to demonstrate that the discharge of treated wastewater to the Discharger's land irrigation system is in compliance with this Order and shall include, but not be limited to the following:

(1) In accordance with the previously approved workplan, by **February 1, 2011**, submit for Executive Officer approval a report describing the findings and conclusions of the reclamation study that models the fate and transport of wastewater, nutrients, and salts. The report should include all pertinent information including field data and lab reports, etc. used to derive conclusions in the report.

(2) If the reclamation study demonstrates that wastewater reuse does not conform to the requirements of this Order, by **August 1, 2011**, the Discharger shall:

(a) submit for Executive Officer approval, a written proposal including milestones and a time schedule for completion, to either study alternatives to comply with reclamation / recycling requirements of this Order; or

(b) submit a revised report of waste discharge and apply for a permit to conduct land disposal.

3. Best Management Practices and Pollution Prevention

a. Pollutant Minimization Program (PMP)

The Discharger shall develop and conduct a PMP as further described below when there is evidence (e.g., sample results reported as DNQ when the effluent limitation is less than the MDL, sample results from analytical methods more sensitive than those methods required by this Order, presence of whole effluent toxicity, health advisories for fish consumption, results of benthic or aquatic organism tissue sampling) that a priority pollutant is present in the effluent above an effluent limitation and either:

(1) A sample result is reported as DNQ and the effluent limitation is less than the RL; or

(2) A sample result is reported as ND and the effluent limitation is less than the MDL, using definitions described in Attachment A and reporting protocols described in MRP section X.B.4.

The PMP shall include, but not be limited to, the following actions and submittals acceptable to the Regional Water Board:

(1) An annual review and semi-annual monitoring of potential sources of the reportable priority pollutant(s), which may include fish tissue monitoring and other bio-uptake sampling;

(2) Quarterly monitoring for the reportable priority pollutant(s) in the influent to the wastewater treatment system;

(3) Submittal of a control strategy designed to proceed toward the goal of maintaining concentrations of the reportable priority pollutant(s) in the effluent at or below the effluent limitation;

(4) Implementation of appropriate cost-effective control measures for the reportable priority pollutant(s), consistent with the control strategy; and

(5) An annual status report that shall be sent to the Regional Water Board including:

(a) All PMP monitoring results for the previous year;

(b) A list of potential sources of the reportable priority pollutant(s);

(c) A summary of all actions undertaken pursuant to the control strategy; and

(d) A description of actions to be taken in the following year.

4. Construction, Operation and Maintenance Specifications

a. The Discharger shall at all times properly operate and maintain all facilities and systems of treatment and control (and related appurtenances) that are installed or used by the Discharger to achieve compliance with this Order. Proper operation and maintenance includes adequate laboratory quality control and appropriate quality assurance procedures. This provision requires the operation or backup or auxiliary facilities or similar systems that are installed by the Discharger only when necessary to achieve compliance with the conditions of this Order. (title 40, section 122.41 (e))

b. The Discharger shall maintain an updated Operation and Maintenance (O&M) Manual for the facility. The Discharger shall update the O&M Manual, as necessary, to conform with changes in operation and maintenance of the facility. The O&M Manual shall be readily available to operating personnel onsite. The O&M Manual shall include the following.

(1) Description of the treatment plant table of organization showing the number of employees, duties and qualifications and plant attendance schedules (daily, weekends and holidays, part-time, etc). The description should include

documentation that the personnel are knowledgeable and qualified to operate the treatment facility so as to achieve the required level of treatment at all times.

(2) Detailed description of safe and effective operation and maintenance of treatment processes, process control instrumentation and equipment.

(3) Description of laboratory and quality assurance procedures.

(4) Process and equipment inspection and maintenance schedules.

(5) Description of safeguards to assure that, should there be reduction, loss, or failure of electric power, the Discharger will be able to comply with requirements of this Order.

(6) Description of preventive (fail-safe) and contingency (response and cleanup) plans for controlling accidental discharges, and for minimizing the effect of such events. These plans shall identify the possible sources (such as loading and storage areas, power outage, waste treatment unit failure, process equipment failure, tank and piping failure) of accidental discharges, untreated or partially treated waste bypass, and polluted drainage.

5. Special Provisions for Municipal Facilities (POTWs Only)

a. Wastewater Collection Systems

(1) Statewide General WDRs for Sanitary Sewer Systems.

(a) On May 2, 2006, the State Water Board adopted State Water Board Order No. 2006-0003-DWQ, Statewide General WDRs for Sanitary Sewer Systems. Order No. 2006-0003-DWQ requires that all public agencies that currently own or operate sanitary sewer systems apply for coverage under the General WDRs. The deadline for the Discharger to apply for coverage under State Water Board Order No. 2006-0003-DWQ for operation of its wastewater collection system was November 2, 2006. On February 20, 2008, the State Water Board adopted Order No. WQ 2008-0002-EXEC Adopting Amended Monitoring and Reporting Requirements for Statewide General Waste Discharge Requirements for Sanitary Sewer Systems. The Discharger shall maintain coverage under, and shall be subject to the requirements of Order Nos. 2006-0003-DWQ and WQ-2008-0002-EXEC and any future revisions thereto for operation of its wastewater collection system.

.

(b) In addition to the coverage obtained under Order No. 2006-0003, the Discharger's collection system is part of the system that is subject to this

Order. As such, the Discharger must properly operate and maintain its collection system. (title 40, section 122.41 (e)) The Discharger must report any noncompliance (title 40, sections 122.41 (l) (6) and (7)) and mitigate any discharge from the collection system in violation of this Order (title 40, section 122.41 (d)).

(2) **Sanitary Sewer Overflows**. The Discharger has commenced electronic and/or telefax reporting of sanitary sewer overflows (SSOs) pursuant to Provision D.15 and General Monitoring and Reporting Requirement G.2 of Order No. 2006-0003-DWQ, Monitoring and Reporting Program No. 2006-0003-DWQ, and Order No. WQ 2008-0002-EXEC. Oral and written reporting[9] of SSOs as specified below in this subsection shall continue through the term of this Order.

SSOs shall be reported orally and in writing to the Regional Water Board staff in accordance with the following:

(a) SSOs in excess of 1,000 gallons or any SSO that results in sewage reaching surface waters, or if it is likely that more than 1,000 gallons has escaped the collection system, shall be reported immediately by telephone. A written description of the event shall be submitted in conjunction with the monthly monitoring report.

(b) SSOs that result in a sewage spill between 100 gallons and 1,000 gallons that do not reach a surface waterway shall be reported orally within 24 hours. A written description of the event shall be submitted with the next monthly monitoring report.

(c) Information to be provided orally includes:

(i) Name and contact information of caller,
(ii) Date, time and location of SSO occurrence,
(iii) Estimates of spill volume, rate of flow, and spill duration,
(iv) Surface water bodies impacted,
(v) Cause of spill,
(vi) Cleanup actions taken or repairs made,
(vii) Responding agencies

(d) Information to be provided in writing includes:

(i) Information provided in verbal notification,

[9] Oral reporting means direct contact with a Regional Water Board staff person. The oral report may be given in person or by telephone. After business hours, oral contact must be made by calling the State Office of Emergency Services or the Regional Water Board spill officer.

(ii) Other agencies notified by phone,
(iii) Detailed description of cleanup actions and repairs taken,
(iv) Description of actions that will be taken to minimize or prevent future spills
(v) Results of any water quality monitoring conducted

b. Source Control Provisions

The Discharger shall perform source control functions, to include the following.

(1) Implement the necessary legal authorities to monitor and enforce source control standards, restrict discharges of toxic materials to the collection system and inspect facilities connected to the system.

(2) If waste haulers are allowed to discharge to the Facility, establish a waste hauler permit system, to be reviewed by the Executive Officer, to regulate waste haulers discharging to the collection system or facility.

(3) Conduct a waste survey one time every five years, or more frequently if required by the Executive Officer, to identify all industrial dischargers that might discharge pollutants that could pass through or interfere with the operation or performance of the facility

(4) Perform ongoing industrial inspections and monitoring, as necessary, to ensure adequate source control.

(5) Perform public outreach to educate industrial, commercial, and residential users about the importance of preventing discharges of industrial and toxic wastes to the wastewater treatment plant.

c. Sludge Disposal and Handling Requirements

(1) Sludge, as used in this document, means the solid, semisolid, and liquid residues removed during primary, secondary, or advanced wastewater treatment processes. Solid waste refers to grit and screenings generated during preliminary treatment. Biosolids refers to sludge that has been treated and tested and shown to be capable of being beneficially and legally used pursuant to federal and State regulations as a soil amendment for agriculture, silviculture, horticulture, and land reclamation activities.

(2) All collected sludges and other solid waste removed from liquid wastes shall be removed from screens, sumps, ponds, and tanks as needed to ensure optimal plant operation and disposed of in accordance with applicable federal and State regulations.

(3) The use and disposal of biosolids shall comply with all requirements of title 40, section 503, which are enforceable by the USEPA, not the Regional Water Board. If, during the term of this Order, the State accepts primacy for implementation of title 40, section 503, the Regional Water Board may also initiate enforcement, where appropriate.

(4) Sludge or biosolids that are disposed of in a municipal solid waste landfill or used as landfill daily cover shall meet the applicable requirements of title 40, section 258. In its annual Self-Monitoring Report, the Discharger shall report the amount of sludge or biosolids disposed of, and the landfill(s) which received the sludge or biosolids.

(5) The beneficial use of biosolids by application to land as soil amendment is not covered or authorized by this Order. Class B biosolids that are applied to land as soil amendment by the Discharger within the North Coast Region shall comply with State Water Board Water Quality Order No. 2004-0012-DWQ (*General Waste Discharge Requirements for the Discharge of Biosolids to Land as a Soil Amendment in Agricultural, Silvicultural, Horticultural, and Land Reclamation Activities*) or other applicable WDRs issued by the Regional Water Board.

(6) The Discharger shall take all reasonable steps to prevent and minimize any sludge use or disposal in violation of this Order that is likely to adversely affect human health or the environment.

(7) Solids and sludge treatment, storage, and disposal or reuse shall not create a nuisance, such as objectionable odors and flies, and shall not result in ground water contamination.

(8) Solids and sludge treatment and storage sites shall have facilities adequate to divert surface water runoff from adjacent areas, to protect the boundaries of the site from erosion, and to prevent drainage from the treatment and storage site. Adequate protection is defined as protection from at least a 100-year storm event.

(9) The discharge of sewage sludge, biosolids, and other waste solids shall not cause waste material to be in a position where it is, or can be conveyed from the treatment and storage sites and deposited in the waters of the State.

d. Operator Certification

Supervisors and operators of municipal WWTFs shall possess a certificate of appropriate grade in accordance with title 23, Cal. Code of Regs, section 3680. The State Water Board may accept experience in lieu of qualification training. In lieu of a properly certified WWTP operator, the State Water Board may approve

use of a water treatment facility operator of appropriate grade certified by the State Department of Public Health where water reclamation is involved.

e. Adequate Capacity

If the Discharger's wastewater treatment plant will reach capacity within four years, the Discharger shall notify the Regional Water Board. A copy of such notification shall be sent to appropriate local elected officials, local permitting agencies, and the press. Factors to be evaluated in assessing reserve capacity shall include, at a minimum, (1) comparison of the wet weather design flow with the highest daily flow, and (2) comparison of the average dry weather design flow with the lowest 30-day flow. The Discharger shall demonstrate that adequate steps are being taken to address the capacity problem. The Discharger shall submit a technical report to the Regional Water Board showing how flow volumes will be prevented from exceeding capacity, or how capacity will be increased, within 120 days after providing notification to the Regional Water Board, or within 120 days after receipt of Regional Water Board notification, that the WWTP will reach capacity within four years. The time for filing the required technical report may be extended by the Regional Water Board. An extension of 30 days may be granted by the Executive Officer, and longer extensions may be granted by the Regional Water Board itself (title 23, Cal. Code of Regs., section 2232)

f. Statewide General WDRs for Discharge of Biosolids to Land

For the discharge of biosolids from the wastewater treatment plant, the Discharger shall seek authorization to discharge under and meet the requirements of the State Water Resources Control Board Water Quality Order No. 2004-0012–DWQ General Waste Discharge Requirements for the Discharge of Biosolids to Land or Use as a Soil Amendment In Agricultural, Silvicultural, Horticultural, and Land Reclamation Activities (or subsequent renewed versions of the General Permit). The Discharger shall submit a notice of intent for coverage under Order No. 2004-0012–DWQ prior to removal of biosolids from either the oxidation or settling pond. A separate notice of intent for coverage under Order No. 2004-0012–DWQ shall be submitted for coverage prior to discharge of biosolids obtained through the activated sludge processes from the new WWTF.

6. Other Special Provisions – Stormwater

For the control of storm water discharged from the site of the wastewater treatment plant, if applicable, the Discharger shall seek authorization to discharge under and meet the requirements of the State Water Board's Water Quality Order 97-03-DWQ, NPDES General Permit No. CAS000001, Waste Discharge Requirements for Discharges of Storm Water Associated with Industrial Activities Excluding Construction Activities (or subsequent renewed versions of the General Permit).

7. Compliance Schedules

This section of the Order is not applicable as this Order requires compliance with final effluent limitations upon the effective date of the Order.

VII. COMPLIANCE DETERMINATION

Compliance with the effluent limitations contained in section IV of this Order will be determined as specified below:

A. General

Compliance with effluent limitations for priority pollutants shall be determined using sample reporting protocols defined in the MRP and Attachment A of this Order. For purposes of reporting and administrative enforcement by the Regional and State Water Boards, the Discharger shall be deemed out of compliance with effluent limitations if the concentration of the priority pollutant in the monitoring sample is greater than the effluent limitation and greater than or equal to the reporting level (RL).

B. Multiple Sample Data

When determining compliance with an AMEL**,** AWEL, or MDEL for priority pollutants and more than one sample result is available, the Discharger shall compute the arithmetic mean unless the data set contains one or more reported determinations of “Detected, but Not Quantified” (DNQ) or “Not Detected” (ND). In those cases, the Discharger shall compute the median in place of the arithmetic mean in accordance with the following procedure:

1. The data set shall be ranked from low to high, ranking the reported ND determinations lowest, DNQ determinations next, followed by quantified values (if any). The order of the individual ND or DNQ determinations is unimportant.

2. The median value of the data set shall be determined. If the data set has an odd number of data points, then the median is the middle value. If the data set has an even number of data points, then the median is the average of the two values around the middle unless one or both of the points are ND or DNQ, in which case the median value shall be the lower of the two data points where DNQ is lower than a value and ND is lower than DNQ.

C. Average Monthly Effluent Limitation (AMEL)

If the average (or when applicable, the median determined by subsection B above for multiple sample data) of daily discharges over a calendar month exceeds the AMEL for a given parameter, this will represent a single violation, though the Discharger will be considered out of compliance for each day of that month for that parameter (e.g., resulting

in 31 days of non-compliance in a 31-day month). If only a single sample is taken during the calendar month and the analytical result for that sample exceeds the AMEL, the Discharger will be considered out of compliance for that calendar month. The Discharger will only be considered out of compliance for days when the discharge occurs. For any one calendar month during which no sample (daily discharge) is taken, no compliance determination can be made for that calendar month.

D. Average Weekly Effluent Limitation (AWEL)

If the average (or when applicable, the median determined by subsection B above for multiple sample data) of daily discharges over a calendar week exceeds the AWEL for a given parameter, this will represent a single violation, though the Discharger will be considered out of compliance for each day of that week for that parameter, resulting in 7 days of non-compliance. If only a single sample is taken during the calendar week and the analytical result for that sample exceeds the AWEL, the Discharger will be considered out of compliance for that calendar week. The Discharger will only be considered out of compliance for days when the discharge occurs. For any one calendar week during which no sample (daily discharge) is taken, no compliance determination can be made for that calendar week.

E. Maximum Daily Effluent Limitation (MDEL)

If a daily discharge (or when applicable, the median determined by subsection B above for multiple sample data of a daily discharge) exceeds the MDEL for a given parameter, the Discharger will be considered out of compliance for that parameter for that 1 day only within the reporting period. For any 1 day during which no sample is taken, no compliance determination can be made for that day.

F. Instantaneous Minimum Effluent Limitation

If the analytical result of a single grab sample is lower than the instantaneous minimum effluent limitation for a parameter, the Discharger will be considered out of compliance for that parameter for that single sample. Non-compliance for each sample will be considered separately (e.g., the results of two grab samples taken within a calendar day that both are lower than the instantaneous minimum effluent limitation would result in two instances of non-compliance with the instantaneous minimum effluent limitation).

G. Instantaneous Maximum Effluent Limitation

If the analytical result of a single grab sample is higher than the instantaneous maximum effluent limitation for a parameter, the Discharger will be considered out of compliance for that parameter for that single sample. Non-compliance for each sample will be considered separately (e.g., the results of two grab samples taken within a calendar day that both exceed the instantaneous maximum effluent limitation would result in two instances of non-compliance with the instantaneous maximum effluent limitation).

ATTACHMENT A – DEFINITIONS

Arithmetic Mean (μ), also called the average, is the sum of measured values divided by the number of samples. For ambient water concentrations, the arithmetic mean is calculated as follows:

Arithmetic mean = $\mu = \Sigma x / n$ where: Σx is the sum of the measured ambient water concentrations, and n is the number of samples.

Average Monthly Effluent Limitation (AMEL): the highest allowable average of daily discharges over a calendar month, calculated as the sum of all daily discharges measured during a calendar month divided by the number of daily discharges measured during that month.

Average Weekly Effluent Limitation (AWEL): the highest allowable average of daily discharges over a calendar week (Sunday through Saturday), calculated as the sum of all daily discharges measured during a calendar week divided by the number of daily discharges measured during that week.

Bioaccumulative pollutants are those substances taken up by an organism from its surrounding medium through gill membranes, epithelial tissue, or from food and subsequently concentrated and retained in the body of the organism.

Carcinogenic pollutants are substances that are known to cause cancer in living organisms.

Coefficient of Variation (CV) is a measure of the data variability and is calculated as the estimated standard deviation divided by the arithmetic mean of the observed values.

Daily Discharge: Daily Discharge is defined as either: (1) the total mass of the constituent discharged over the calendar day (12:00 am through 11:59 pm) or any 24-hour period that reasonably represents a calendar day for purposes of sampling (as specified in the permit), for a constituent with limitations expressed in units of mass or; (2) the unweighted arithmetic mean measurement of the constituent over the day for a constituent with limitations expressed in other units of measurement (e.g., concentration).

The daily discharge may be determined by the analytical results of a composite sample taken over the course of one day (a calendar day or other 24-hour period defined as a day) or by the arithmetic mean of analytical results from one or more grab samples taken over the course of the day.

For composite sampling, if 1 day is defined as a 24-hour period other than a calendar day, the analytical result for the 24-hour period will be considered as the result for the calendar day in which the 24-hour period ends.

Detected, but Not Quantified (DNQ) are those sample results less than the RL, but greater than or equal to the laboratory's MDL.

Dilution Credit is the amount of dilution granted to a discharge in the calculation of a water quality-based effluent limitation, based on the allowance of a specified mixing zone. It is calculated from the dilution ratio or determined through conducting a mixing zone study or modeling of the discharge and receiving water.

Effluent Concentration Allowance (ECA) is a value derived from the water quality criterion/objective, dilution credit, and ambient background concentration that is used, in conjunction with the coefficient of variation for the effluent monitoring data, to calculate a long-term average (LTA) discharge concentration. The ECA has the same meaning as waste load allocation (WLA) as used in USEPA guidance (Technical Support Document For Water Quality-based Toxics Control, March 1991, second printing, EPA/505/2-90-001).

Enclosed Bays means indentations along the coast that enclose an area of oceanic water within distinct headlands or harbor works. Enclosed bays include all bays where the narrowest distance between the headlands or outermost harbor works is less than 75 percent of the greatest dimension of the enclosed portion of the bay. Enclosed bays include, but are not limited to, Humboldt Bay, Bodega Harbor, Tomales Bay, Drake's Estero, San Francisco Bay, Morro Bay, Los Angeles-Long Beach Harbor, Upper and Lower Newport Bay, Mission Bay, and San Diego Bay. Enclosed bays do not include inland surface waters or ocean waters.

Estimated Chemical Concentration is the estimated chemical concentration that results from the confirmed detection of the substance by the analytical method below the ML value.

Estuaries means waters, including coastal lagoons, located at the mouths of streams that serve as areas of mixing for fresh and ocean waters. Coastal lagoons and mouths of streams that are temporarily separated from the ocean by sandbars shall be considered estuaries. Estuarine waters shall be considered to extend from a bay or the open ocean to a point upstream where there is no significant mixing of fresh water and seawater. Estuarine waters included, but are not limited to, the Sacramento-San Joaquin Delta, as defined in Water Code section 12220, Suisun Bay, Carquinez Strait downstream to the Carquinez Bridge, and appropriate areas of the Smith, Mad, Eel, Noyo, Russian, Klamath, San Diego, and Otay rivers. Estuaries do not include inland surface waters or ocean waters.

Inland Surface Waters are all surface waters of the State that do not include the ocean, enclosed bays, or estuaries.

Instantaneous Maximum Effluent Limitation: the highest allowable value for any single grab sample or aliquot (i.e., each grab sample or aliquot is independently compared to the instantaneous maximum limitation).

Instantaneous Minimum Effluent Limitation: the lowest allowable value for any single grab sample or aliquot (i.e., each grab sample or aliquot is independently compared to the instantaneous minimum limitation).

Maximum Daily Effluent Limitation (MDEL) means the highest allowable daily discharge of a pollutant, over a calendar day (or 24-hour period). For pollutants with limitations expressed in units of mass, the daily discharge is calculated as the total mass of the pollutant discharged over the day. For pollutants with limitations expressed in other units of measurement, the daily discharge is calculated as the arithmetic mean measurement of the pollutant over the day.

Median is the middle measurement in a set of data. The median of a set of data is found by first arranging the measurements in order of magnitude (either increasing or decreasing order). If the number of measurements (n) is odd, then the median = $X_{(n+1)/2}$. If n is even, then the median = $(X_{n/2} + X_{(n/2)+1})/2$ (i.e., the midpoint between the $n/2$ and $n/2+1$).

Method Detection Limit (MDL) is the minimum concentration of a substance that can be measured and reported with 99 percent confidence that the analyte concentration is greater than zero, as defined in title 40 of the Code of Federal Regulations, Part 136, Attachment B, revised as of July 3, 1999.

Minimum Level (ML) is the concentration at which the entire analytical system must give a recognizable signal and acceptable calibration point. The ML is the concentration in a sample that is equivalent to the concentration of the lowest calibration standard analyzed by a specific analytical procedure, assuming that all the method specified sample weights, volumes, and processing steps have been followed.

Mixing Zone is a limited volume of receiving water that is allocated for mixing with a wastewater discharge where water quality criteria can be exceeded without causing adverse effects to the overall water body.

Not Detected (ND) are those sample results less than the laboratory's MDL.

Ocean Waters are the territorial marine waters of the State as defined by California law to the extent these waters are outside of enclosed bays, estuaries, and coastal lagoons. Discharges to ocean waters are regulated in accordance with the State Water Board's California Ocean Plan.

Persistent pollutants are substances for which degradation or decomposition in the environment is nonexistent or very slow.

Pollutant Minimization Program (PMP) means waste minimization and pollution prevention actions that include, but are not limited to, product substitution, waste stream recycling, alternative waste management methods, and education of the public and businesses. The goal of the PMP shall be to reduce all potential sources of a priority pollutant(s) through pollutant minimization (control) strategies, including pollution prevention measures as

appropriate, to maintain the effluent concentration at or below the water quality-based effluent limitation. Pollution prevention measures may be particularly appropriate for persistent bioaccumulative priority pollutants where there is evidence that beneficial uses are being impacted. The Regional Water Board may consider cost effectiveness when establishing the requirements of a PMP. The completion and implementation of a Pollution Prevention Plan, if required pursuant to Water Code section 13263.3(d), shall be considered to fulfill the PMP requirements.

Pollution Prevention means any action that causes a net reduction in the use or generation of a hazardous substance or other pollutant that is discharged into water and includes, but is not limited to, input change, operational improvement, production process change, and product reformulation (as defined in Water Code section 13263.3). Pollution prevention does not include actions that merely shift a pollutant in wastewater from one environmental medium to another environmental medium, unless clear environmental benefits of such an approach are identified to the satisfaction of the State or Regional Water Board.

Reporting Level (RL) is the ML (and its associated analytical method) chosen by the Discharger for reporting and compliance determination from the MLs included in this Order. The MLs included in this Order correspond to approved analytical methods for reporting a sample result that are selected by the Regional Water Board either from Appendix 4 of the SIP in accordance with section 2.4.2 of the SIP or established in accordance with section 2.4.3 of the SIP. The ML is based on the proper application of method-based analytical procedures for sample preparation and the absence of any matrix interferences. Other factors may be applied to the ML depending on the specific sample preparation steps employed. For example, the treatment typically applied in cases where there are matrix-effects is to dilute the sample or sample aliquot by a factor of ten. In such cases, this additional factor must be applied to the ML in the computation of the RL.

Satellite Collection System is the portion, if any, of a sanitary sewer system owned or operated by a different public agency than the agency that owns and operates the wastewater treatment facility that a sanitary sewer system is tributary to.

Source of Drinking Water is any water designated as municipal or domestic supply (MUN) in a Regional Water Board Basin Plan.

Standard Deviation (σ) is a measure of variability that is calculated as follows:

$$\sigma = (\sum[(x - \mu)^2]/(n - 1))^{0.5}$$

where:
x is the observed value;
μ is the arithmetic mean of the observed values; and
n is the number of samples.

Toxicity Reduction Evaluation (TRE) is a study conducted in a step-wise process designed to identify the causative agents of effluent or ambient toxicity, isolate the sources of toxicity,

evaluate the effectiveness of toxicity control options, and then confirm the reduction in toxicity. The first steps of the TRE consist of the collection of data relevant to the toxicity, including additional toxicity testing, and an evaluation of facility operations and maintenance practices, and best management practices. A Toxicity Identification Evaluation (TIE) may be required as part of the TRE, if appropriate. (A TIE is a set of procedures to identify the specific chemical(s) responsible for toxicity. These procedures are performed in three phases (characterization, identification, and confirmation) using aquatic organism toxicity tests.)

ATTACHMENT B – MAP

ATTACHMENT C1 – FLOW SCHEMATIC

EXISTING WASTEWATER TREATMENT FACILITY

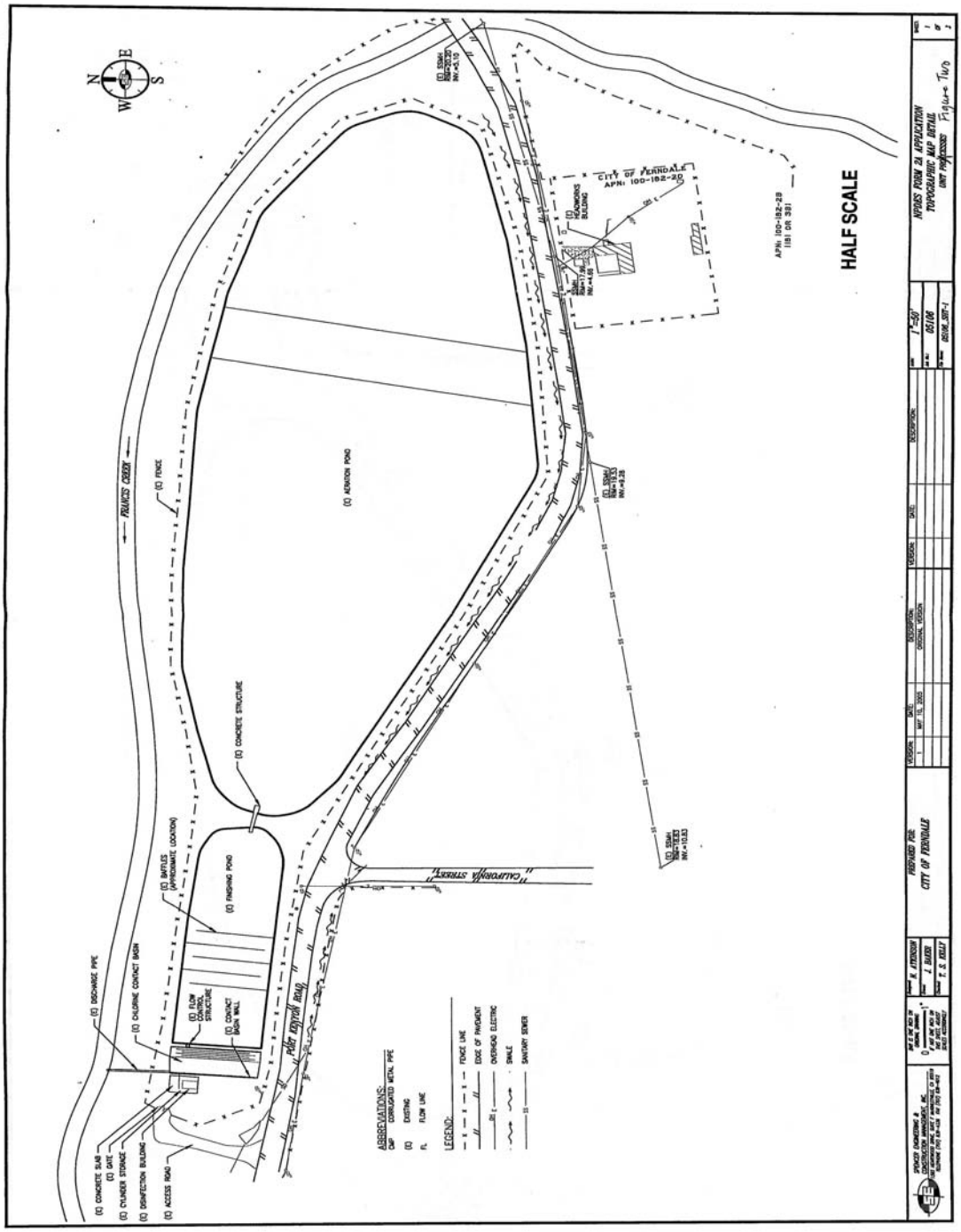

ATTACHMENT C2 – FLOW SCHEMATIC

NEW WASTEWATER TREATMENT FACILITY

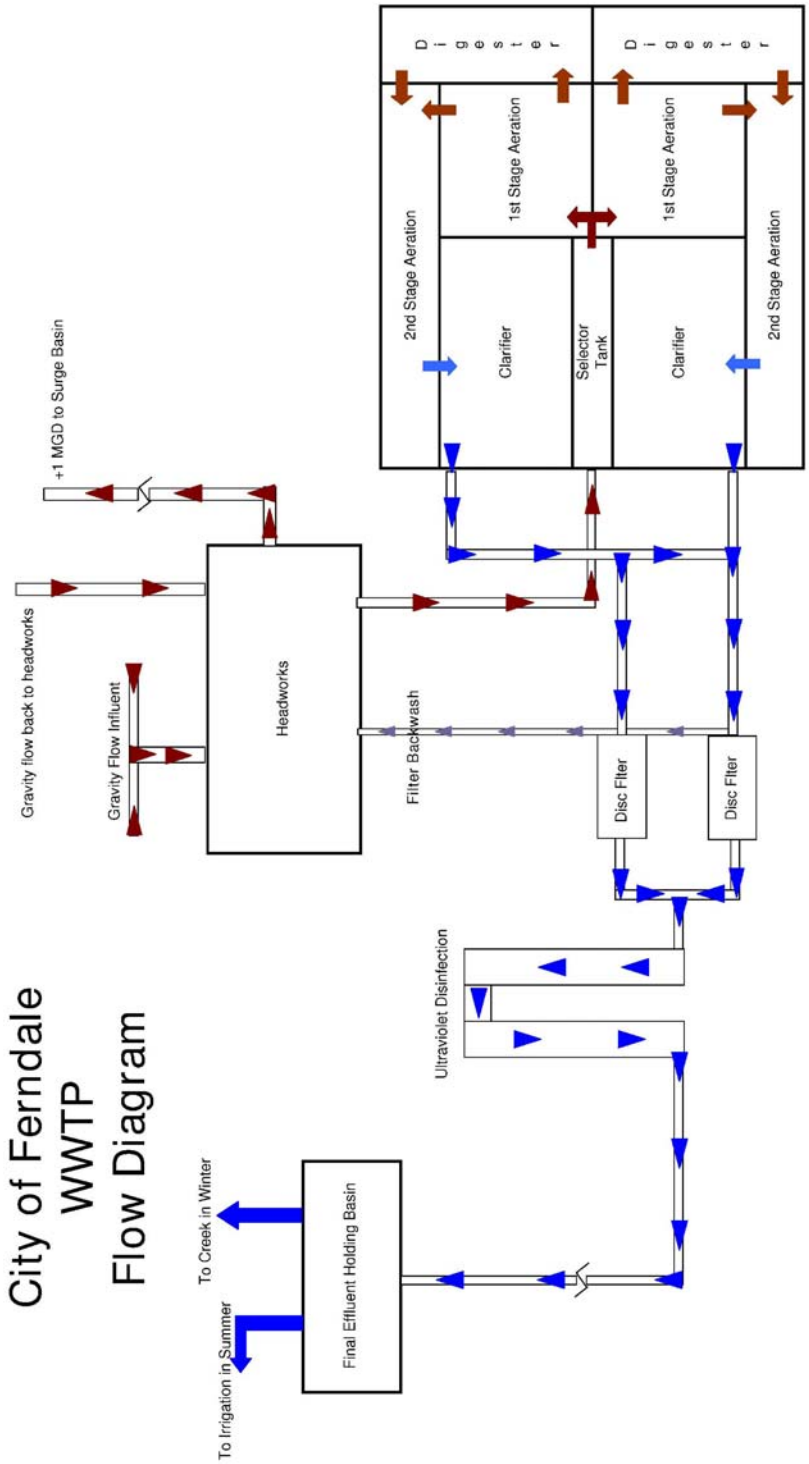

ATTACHMENT D –STANDARD PROVISIONS

I. STANDARD PROVISIONS – PERMIT COMPLIANCE

A. Duty to Comply

1. The Discharger must comply with all of the conditions of this Order. Any noncompliance constitutes a violation of the Clean Water Act (CWA) and the California Water Code and is grounds for enforcement action, for permit termination, revocation and reissuance, or modification; or denial of a permit renewal application. (40 C.F.R. § 122.41(a).)

2. The Discharger shall comply with effluent standards or prohibitions established under section 307(a) of the CWA for toxic pollutants and with standards for sewage sludge use or disposal established under section 405(d) of the CWA within the time provided in the regulations that establish these standards or prohibitions, even if this Order has not yet been modified to incorporate the requirement. (40 C.F.R. § 122.41(a)(1).)

B. Need to Halt or Reduce Activity Not a Defense

It shall not be a defense for a Discharger in an enforcement action that it would have been necessary to halt or reduce the permitted activity in order to maintain compliance with the conditions of this Order. (40 C.F.R. § 122.41(c).)

C. Duty to Mitigate

The Discharger shall take all reasonable steps to minimize or prevent any discharge or sludge use or disposal in violation of this Order that has a reasonable likelihood of adversely affecting human health or the environment. (40 C.F.R. § 122.41(d).)

D. Proper Operation and Maintenance

The Discharger shall at all times properly operate and maintain all facilities and systems of treatment and control (and related appurtenances) which are installed or used by the Discharger to achieve compliance with the conditions of this Order. Proper operation and maintenance also includes adequate laboratory controls and appropriate quality assurance procedures. This provision requires the operation of backup or auxiliary facilities or similar systems that are installed by a Discharger only when necessary to achieve compliance with the conditions of this Order. (40 C.F.R. § 122.41(e).)

E. Property Rights

1. This Order does not convey any property rights of any sort or any exclusive privileges. (40 C.F.R. § 122.41(g).)

2. The issuance of this Order does not authorize any injury to persons or property or invasion of other private rights, or any infringement of state or local law or regulations. (40 C.F.R. § 122.5(c).)

F. Inspection and Entry

The Discharger shall allow the Regional Water Board, State Water Board, United States Environmental Protection Agency (USEPA), and/or their authorized representatives (including an authorized contractor acting as their representative), upon the presentation of credentials and other documents, as may be required by law, to (40 C.F.R. § 122.41(i); Wat. Code, § 13383):

1. Enter upon the Discharger's premises where a regulated facility or activity is located or conducted, or where records are kept under the conditions of this Order (40 C.F.R. § 122.41(i)(1));

2. Have access to and copy, at reasonable times, any records that must be kept under the conditions of this Order (40 C.F.R. § 122.41(i)(2));

3. Inspect and photograph, at reasonable times, any facilities, equipment (including monitoring and control equipment), practices, or operations regulated or required under this Order (40 C.F.R. § 122.41(i)(3)); and

4. Sample or monitor, at reasonable times, for the purposes of assuring Order compliance or as otherwise authorized by the CWA or the Water Code, any substances or parameters at any location. (40 C.F.R. § 122.41(i)(4).)

G. Bypass

1. Definitions

   a. “Bypass” means the intentional diversion of waste streams from any portion of a treatment facility. (40 C.F.R. § 122.41(m)(1)(i).)

   b. “Severe property damage” means substantial physical damage to property, damage to the treatment facilities, which causes them to become inoperable, or substantial and permanent loss of natural resources that can reasonably be expected to occur in the absence of a bypass. Severe property damage does not mean economic loss caused by delays in production. (40 C.F.R. § 122.41(m)(1)(ii).)

2. Bypass not exceeding limitations. The Discharger may allow any bypass to occur which does not cause exceedences of effluent limitations, but only if it is for essential maintenance to assure efficient operation. These bypasses are not subject to the provisions listed in Standard Provisions – Permit Compliance I.G.3, I.G.4, and I.G.5 below. (40 C.F.R. § 122.41(m)(2).)

3. Prohibition of bypass. Bypass is prohibited, and the Regional Water Board may take enforcement action against a Discharger for bypass, unless (40 C.F.R. § 122.41(m)(4)(i)):

   a. Bypass was unavoidable to prevent loss of life, personal injury, or severe property damage (40 C.F.R. § 122.41(m)(4)(i)(A));

   b. There were no feasible alternatives to the bypass, such as the use of auxiliary treatment facilities, retention of untreated wastes, or maintenance during normal periods of equipment downtime. This condition is not satisfied if adequate back-up equipment should have been installed in the exercise of reasonable engineering judgment to prevent a bypass that occurred during normal periods of equipment downtime or preventive maintenance (40 C.F.R. § 122.41(m)(4)(i)(B)); and

   c. The Discharger submitted notice to the Regional Water Board as required under Standard Provisions – Permit Compliance I.G.5 below. (40 C.F.R. § 122.41(m)(4)(i)(C).)

4. The Regional Water Board may approve an anticipated bypass, after considering its adverse effects, if the Regional Water Board determines that it will meet the three conditions listed in Standard Provisions – Permit Compliance I.G.3 above. (40 C.F.R. § 122.41(m)(4)(ii).)

5. Notice

   a. Anticipated bypass. If the Discharger knows in advance of the need for a bypass, it shall submit a notice, if possible at least 10 days before the date of the bypass. (40 C.F.R. § 122.41(m)(3)(i).)

   b. Unanticipated bypass. The Discharger shall submit notice of an unanticipated bypass as required in Standard Provisions - Reporting V.E below (24-hour notice). (40 C.F.R. § 122.41(m)(3)(ii).)

H. Upset

Upset means an exceptional incident in which there is unintentional and temporary noncompliance with technology based permit effluent limitations because of factors beyond the reasonable control of the Discharger. An upset does not include

noncompliance to the extent caused by operational error, improperly designed treatment facilities, inadequate treatment facilities, lack of preventive maintenance, or careless or improper operation. (40 C.F.R. § 122.41(n)(1).)

1. Effect of an upset. An upset constitutes an affirmative defense to an action brought for noncompliance with such technology based permit effluent limitations if the requirements of Standard Provisions – Permit Compliance I.H.2 below are met. No determination made during administrative review of claims that noncompliance was caused by upset, and before an action for noncompliance, is final administrative action subject to judicial review. (40 C.F.R. § 122.41(n)(2).).

2. Conditions necessary for a demonstration of upset. A Discharger who wishes to establish the affirmative defense of upset shall demonstrate, through properly signed, contemporaneous operating logs or other relevant evidence that (40 C.F.R. § 122.41(n)(3)):

a. An upset occurred and that the Discharger can identify the cause(s) of the upset (40 C.F.R. § 122.41(n)(3)(i));

b. The permitted facility was, at the time, being properly operated (40 C.F.R. § 122.41(n)(3)(ii));

c. The Discharger submitted notice of the upset as required in Standard Provisions – Reporting V.E.2.b below (24-hour notice) (40 C.F.R. § 122.41(n)(3)(iii)); and

d. The Discharger complied with any remedial measures required under Standard Provisions – Permit Compliance I.C above. (40 C.F.R. § 122.41(n)(3)(iv).)

3. Burden of proof. In any enforcement proceeding, the Discharger seeking to establish the occurrence of an upset has the burden of proof. (40 C.F.R. § 122.41(n)(4).)

II. STANDARD PROVISIONS – PERMIT ACTION

A. General

This Order may be modified, revoked and reissued, or terminated for cause. The filing of a request by the Discharger for modification, revocation and reissuance, or termination, or a notification of planned changes or anticipated noncompliance does not stay any Order condition. (40 C.F.R. § 122.41(f).)

B. Duty to Reapply

If the Discharger wishes to continue an activity regulated by this Order after the expiration date of this Order, the Discharger must apply for and obtain a new permit. (40 C.F.R. § 122.41(b).)

C. Transfers

This Order is not transferable to any person except after notice to the Regional Water Board. The Regional Water Board may require modification or revocation and reissuance of the Order to change the name of the Discharger and incorporate such other requirements as may be necessary under the CWA and the Water Code. (40 C.F.R. § 122.41(l)(3); § 122.61.)

III. STANDARD PROVISIONS – MONITORING

A. Samples and measurements taken for the purpose of monitoring shall be representative of the monitored activity. (40 C.F.R. § 122.41(j)(1).)

B. Monitoring results must be conducted according to test procedures under Part 136 or, in the case of sludge use or disposal, approved under Part 136 unless otherwise specified in Part 503 unless other test procedures have been specified in this Order. (40 C.F.R. § 122.41(j)(4); § 122.44(i)(1)(iv).)

IV. STANDARD PROVISIONS – RECORDS

A. Except for records of monitoring information required by this Order related to the Discharger's sewage sludge use and disposal activities, which shall be retained for a period of at least five years (or longer as required by Part 503), the Discharger shall retain records of all monitoring information, including all calibration and maintenance records and all original strip chart recordings for continuous monitoring instrumentation, copies of all reports required by this Order, and records of all data used to complete the application for this Order, for a period of at least three (3) years from the date of the sample, measurement, report or application. This period may be extended by request of the Regional Water Board Executive Officer at any time. (40 C.F.R. § 122.41(j)(2).)

B. Records of monitoring information shall include:

1. The date, exact place, and time of sampling or measurements (40 C.F.R. § 122.41(j)(3)(i));

2. The individual(s) who performed the sampling or measurements (40 C.F.R. § 122.41(j)(3)(ii));

3. The date(s) analyses were performed (40 C.F.R. § 122.41(j)(3)(iii));

4. The individual(s) who performed the analyses (40 C.F.R. § 122.41(j)(3)(iv));

5. The analytical techniques or methods used (40 C.F.R. § 122.41(j)(3)(v)); and

6. The results of such analyses. (40 C.F.R. § 122.41(j)(3)(vi).)

C. Claims of confidentiality for the following information will be denied (40 C.F.R. § 122.7(b)):

1. The name and address of any permit applicant or Discharger (40 C.F.R. § 122.7(b)(1)); and

2. Permit applications and attachments, permits and effluent data. (40 C.F.R. § 122.7(b)(2).)

V. STANDARD PROVISIONS – REPORTING

A. Duty to Provide Information

The Discharger shall furnish to the Regional Water Board, State Water Board, or USEPA within a reasonable time, any information which the Regional Water Board, State Water Board, or USEPA may request to determine whether cause exists for modifying, revoking and reissuing, or terminating this Order or to determine compliance with this Order. Upon request, the Discharger shall also furnish to the Regional Water Board, State Water Board, or USEPA copies of records required to be kept by this Order. (40 C.F.R. § 122.41(h); Wat. Code, § 13267.)

B. Signatory and Certification Requirements

1. All applications, reports, or information submitted to the Regional Water Board, State Water Board, and/or USEPA shall be signed and certified in accordance with Standard Provisions – Reporting V.B.2, V.B.3, V.B.4, and V.B.5 below. (40 C.F.R. § 122.41(k).)

2. All permit applications shall be signed by either a principal executive officer or ranking elected official. For purposes of this provision, a principal executive officer of a federal agency includes: (i) the chief executive officer of the agency, or (ii) a senior executive officer having responsibility for the overall operations of a principal geographic unit of the agency (e.g., Regional Administrators of USEPA). (40 C.F.R. § 122.22(a)(3).).

3. All reports required by this Order and other information requested by the Regional Water Board, State Water Board, or USEPA shall be signed by a person described

in Standard Provisions – Reporting V.B.2 above, or by a duly authorized representative of that person. A person is a duly authorized representative only if:

a. The authorization is made in writing by a person described in Standard Provisions – Reporting V.B.2 above (40 C.F.R. § 122.22(b)(1));

b. The authorization specifies either an individual or a position having responsibility for the overall operation of the regulated facility or activity such as the position of plant manager, operator of a well or a well field, superintendent, position of equivalent responsibility, or an individual or position having overall responsibility for environmental matters for the company. (A duly authorized representative may thus be either a named individual or any individual occupying a named position.) (40 C.F.R. § 122.22(b)(2)); and

c. The written authorization is submitted to the Regional Water Board and State Water Board. (40 C.F.R. § 122.22(b)(3).)

4. If an authorization under Standard Provisions – Reporting V.B.3 above is no longer accurate because a different individual or position has responsibility for the overall operation of the facility, a new authorization satisfying the requirements of Standard Provisions – Reporting V.B.3 above must be submitted to the Regional Water Board and State Water Board prior to or together with any reports, information, or applications, to be signed by an authorized representative. (40 C.F.R. § 122.22(c).)

5. Any person signing a document under Standard Provisions – Reporting V.B.2 or V.B.3 above shall make the following certification:

"I certify under penalty of law that this document and all attachments were prepared under my direction or supervision in accordance with a system designed to assure that qualified personnel properly gather and evaluate the information submitted. Based on my inquiry of the person or persons who manage the system or those persons directly responsible for gathering the information, the information submitted is, to the best of my knowledge and belief, true, accurate, and complete. I am aware that there are significant penalties for submitting false information, including the possibility of fine and imprisonment for knowing violations." (40 C.F.R. § 122.22(d).)

C. Monitoring Reports

1. Monitoring results shall be reported at the intervals specified in the Monitoring and Reporting Program (Attachment E) in this Order. (40 C.F.R. § 122.22(l)(4).)

2. Monitoring results must be reported on a Discharge Monitoring Report (DMR) form or forms provided or specified by the Regional Water Board or State Water Board for reporting results of monitoring of sludge use or disposal practices. (40 C.F.R. § 122.41(l)(4)(i).)

3. If the Discharger monitors any pollutant more frequently than required by this Order using test procedures approved under Part 136 or, in the case of sludge use or disposal, approved under Part 136 unless otherwise specified in Part 503, or as specified in this Order, the results of this monitoring shall be included in the calculation and reporting of the data submitted in the DMR or sludge reporting form specified by the Regional Water Board. (40 C.F.R. § 122.41(l)(4)(ii).)

4. Calculations for all limitations, which require averaging of measurements, shall utilize an arithmetic mean unless otherwise specified in this Order. (40 C.F.R. § 122.41(l)(4)(iii).)

D. Compliance Schedules

Reports of compliance or noncompliance with, or any progress reports on, interim and final requirements contained in any compliance schedule of this Order, shall be submitted no later than 14 days following each schedule date. (40 C.F.R. § 122.41(l)(5).)

E. Twenty-Four Hour Reporting

1. The Discharger shall report any noncompliance that may endanger health or the environment. Any information shall be provided orally within 24 hours from the time the Discharger becomes aware of the circumstances. A written submission shall also be provided within five (5) days of the time the Discharger becomes aware of the circumstances. The written submission shall contain a description of the noncompliance and its cause; the period of noncompliance, including exact dates and times, and if the noncompliance has not been corrected, the anticipated time it is expected to continue; and steps taken or planned to reduce, eliminate, and prevent reoccurrence of the noncompliance. (40 C.F.R. § 122.41(l)(6)(i).)

2. The following shall be included as information that must be reported within 24 hours under this paragraph (40 C.F.R. § 122.41(l)(6)(ii)):

   a. Any unanticipated bypass that exceeds any effluent limitation in this Order. (40 C.F.R. § 122.41(l)(6)(ii)(A).)

   b. Any upset that exceeds any effluent limitation in this Order. (40 C.F.R. § 122.41(l)(6)(ii)(B).)

3. The Regional Water Board may waive the above-required written report under this provision on a case-by-case basis if an oral report has been received within 24 hours. (40 C.F.R. § 122.41(l)(6)(iii).)

F. Planned Changes

The Discharger shall give notice to the Regional Water Board as soon as possible of any planned physical alterations or additions to the permitted facility. Notice is required under this provision only when (40 C.F.R. § 122.41(l)(1)):

1. The alteration or addition to a permitted facility may meet one of the criteria for determining whether a facility is a new source in section 122.29(b) (40 C.F.R. § 122.41(l)(1)(i)); or

2. The alteration or addition could significantly change the nature or increase the quantity of pollutants discharged. This notification applies to pollutants that are subject neither to effluent limitations in this Order nor to notification requirements under section 122.42(a)(1) (see Additional Provisions – Notification Levels VII.A.1). (40 C.F.R. § 122.41(l)(1)(ii).)

3. The alteration or addition results in a significant change in the Discharger's sludge use or disposal practices, and such alteration, addition, or change may justify the application of permit conditions that are different from or absent in the existing permit, including notification of additional use or disposal sites not reported during the permit application process or not reported pursuant to an approved land application plan. (40 C.F.R.§ 122.41(l)(1)(iii).)

G. Anticipated Noncompliance

The Discharger shall give advance notice to the Regional Water Board or State Water Board of any planned changes in the permitted facility or activity that may result in noncompliance with General Order requirements. (40 C.F.R. § 122.41(l)(2).)

H. Other Noncompliance

The Discharger shall report all instances of noncompliance not reported under Standard Provisions – Reporting V.C, V.D, and V.E above at the time monitoring reports are submitted. The reports shall contain the information listed in Standard Provision – Reporting V.E above. (40 C.F.R. § 122.41(l)(7).)

I. Other Information

When the Discharger becomes aware that it failed to submit any relevant facts in a permit application, or submitted incorrect information in a permit application or in any report to the Regional Water Board, State Water Board, or USEPA, the Discharger shall promptly submit such facts or information. (40 C.F.R. § 122.41(l)(8).)

VI. STANDARD PROVISIONS – ENFORCEMENT

A. The Regional Water Board is authorized to enforce the terms of this permit under several provisions of the Water Code, including, but not limited to, sections 13385, 13386, and 13387.

VII. ADDITIONAL PROVISIONS – NOTIFICATION LEVELS

A. Publicly-Owned Treatment Works (POTWs)

All POTWs shall provide adequate notice to the Regional Water Board of the following (40 C.F.R. § 122.42(b)):

1. Any new introduction of pollutants into the POTW from an indirect discharger that would be subject to sections 301 or 306 of the CWA if it were directly discharging those pollutants (40 C.F.R. § 122.42(b)(1)); and

2. Any substantial change in the volume or character of pollutants being introduced into that POTW by a source introducing pollutants into the POTW at the time of adoption of the Order. (40 C.F.R. § 122.42(b)(2).)

3. Adequate notice shall include information on the quality and quantity of effluent introduced into the POTW as well as any anticipated impact of the change on the quantity or quality of effluent to be discharged from the POTW. (40 C.F.R. § 122.42(b)(3).)

ATTACHMENT E – MONITORING AND REPORTING PROGRAM

Table of Contents

Attachment E – Monitoring and Reporting Program (MRP) E-2
I. .....General Monitoring Provisions E-2
II. ....Monitoring Locations E-2
III. ...Influent Monitoring Requirements E-3
A. Monitoring Location M-INF E-3
IV. ...Effluent Monitoring Requirements E-3
A. Monitoring Location EFF-001 E-3
V. ....Whole Effluent Toxicity Testing Requirements E-5
A. Acute Toxicity Testing E-5
B. Chronic Toxicity Testing E-7
C. Chronic Toxicity Reporting E-9
VI. ...Land Discharge Monitoring Requirements E-10
VII. ..Reclamation Monitoring Requirements E-10
A. Monitoring Location EFF-002 E-10
VIII. .Receiving Water Monitoring Requirements E-11
A. Monitoring Location R-001 E-11
B. Monitoring Location R-002 E-12
C. Monitoring Location R-003 E-12
IX. ...Other Monitoring Requirements E-13
A. Monitoring Location M-CCC E-13
B. Rainfall E-13
C. Disinfection Process Monitoring for UV Disinfection System E-13
X. ....Reporting Requirements E-14
A. General Monitoring and Reporting Requirements E-14
B. Self Monitoring Reports (SMRs) E-14
C. Discharge Monitoring Reports (DMRs) E-17
D. Other Reports E-17

List of Tables

Table E-1. Monitoring Station Locations E-2
Table E-2. Influent Monitoring - Monitoring Location M-INF E-3
Table E-3. Effluent Monitoring - Monitoring Location EFF-001 E-4
Table E-4. Effluent Monitoring - Monitoring Location EFF-002 E-11
Table E-5. Receiving Water Monitoring Requirements – R-001 E-11
Table E-6. Receiving Water Monitoring Requirements – R-002 E-12
Table E-7. Receiving Water Monitoring Requirements – R-003 E-13
Table E-8. Effluent Monitoring - Monitoring Location M-CCC E-13
Table E-8. Monitoring Periods and Reporting Schedule E-15
Table E-9. Final Effluent Limitations for Hardness Dependent Metals E-21

ATTACHMENT E – MONITORING AND REPORTING PROGRAM

The Code of Federal Regulations section 122.48 requires that all NPDES permits specify monitoring and reporting requirements. Water Code sections 13267 and 13383 also authorize the Regional Water Quality Control Board (Regional Water Board) to require technical and monitoring reports. This MRP establishes monitoring and reporting requirements, which implement the federal and California regulations.

I. GENERAL MONITORING PROVISIONS

A. Wastewater Monitoring Provision. Composite samples may be taken by a proportional sampling device approved by the Executive Officer or by grab samples composited in proportion to flow. In compositing grab samples, the sampling interval shall not exceed one hour.

B. If the Discharger monitors any pollutant more frequently than required by this Order, using test procedures approved by title 40, section 136 or as specified in this Order, the results of this monitoring shall be included in the calculation and reporting of the data submitted in the monthly and annual discharger monitoring reports.

C. Laboratories analyzing monitoring samples shall be certified by the Department of Health Services, in accordance with the provision of Water Code section 13176, and must include quality assurance/quality control data with their reports.

II. MONITORING LOCATIONS

The Discharger shall establish the following representative monitoring locations to demonstrate compliance with the effluent limitations, discharge specifications, and other requirements in this Order.

Table E-1. Monitoring Station Locations

Discharge Point	Monitoring Location	Monitoring Location Description
Influent	M-INF	Untreated influent wastewater at the plant's headworks
Process	M-CCC	Wastewater from the chlorine contact chamber prior to dechlorination for purposes of measuring chlorine residual
001	EFF-001	Treated effluent downstream of disinfection processes and before contact with receiving water
002	EFF-002	Treated effluent downstream of the disinfection processes and before effluent application to reclamation use area(s)
Receiving Water	R-001	Francis Creek/Salt River surface water upstream of Discharge Point 001, beyond influence of the discharge

Discharge Point	Monitoring Location	Monitoring Location Description
Receiving Water	R-002	Francis Creek/Salt River surface water at the point of discharge or other location approved by the Executive Officer
Receiving Water	R-003	Salt River surface water ½ mile downstream of Discharge Point 001, or other location approved by the Executive Officer

III. INFLUENT MONITORING REQUIREMENTS

A. Monitoring Location M-INF

1. The Discharger shall monitor influent to the wastewater treatment plant at Monitoring Location M-INF as follows:

Table E-2. Influent Monitoring - Monitoring Location M-INF

Parameter	Units	Sample Type	Sampling Frequency	Required Analytical Method[1]
Flow (Mean)	mgd	Continuous	Daily	Meter
Biochemical Oxygen Demand 5-day @ 20°C [2]	mg/L	8-hr Composite	Weekly	Standard Method 5210B
Total Suspended Solids	mg/L	8-hr Composite	Weekly	Standard Method 2540D

IV. EFFLUENT MONITORING REQUIREMENTS

A. Monitoring Location EFF-001

When discharging at Discharge Point 001, the Discharger shall monitor treated wastewater at Monitoring Location EFF-001 as follows.

[1] In accordance with the current edition of *Standard Methods for the Examination of Water and Wastewater* (American Public Health Administration) or current test procedures specified in title 40, section 136

[2] Monitoring of BOD_5 and TSS in influent shall occur near simultaneously with effluent monitoring for the same parameters

Table E-3. Effluent Monitoring - Monitoring Location EFF-001

Parameter	Units	Sample Type	Sampling Frequency	Required Analytical Test Method[3]
Flow[4]	mgd	Continuous	Daily	Meter
Biochemical Oxygen Demand 5-day @ 20°C	mg/L	8-hr Composite	Weekly	Standard Method 5210B
Total Suspended Solids	mg/L	8-hr Composite	Weekly	Standard Method 2540D
Settleable Solids	mL/L-hr	8-hr Composite	Weekly	Standard Method 2540F
pH[5]	s.u.	Grab	Weekly	title 40, section 136
Temperature[3]	º F	Grab	Monthly	title 40, section 136
Chlorine Residual[6]	mg/L	Grab	Daily	title 40, section 136
Total Coliform Organisms	MPN/100 mLs	Grab	Weekly	Standard Method 9221
Ammonia Nitrogen	mg/L N	Grab	Monthly	title 40, section 136
Nitrate Nitrogen	mg/L N	Grab	Monthly	title 40, section 136
Total Nitrogen	mg/L N	Grab	Monthly	title 40, section 136
Total Phosphorous	mg/L P	Grab	Monthly	title 40, section 136
Total Dissolved Solids	mg/L	Grab	Monthly	Standard Method 2540C
Acute Toxicity	TUa	24-hr Composite	2X / year[7]	MRP section V
Chronic Toxicity	TUc	24-hr Composite	Annually	MRP section V
Copper[8]	µg/L	Grab	Monthly	Inductively Coupled Plasma/Mass Spectrometry
Lead[8]	µg/L	Grab	Monthly	Inductively Coupled Plasma/Mass Spectrometry
Mercury	µg/L	Grab	Monthly	Cold Vapor Atomic Absorption
Nickel[8]	µg/L	Grab	Monthly	Inductively Coupled Plasma/Mass Spectrometry

[3] Analytical methods must achieve the lowest minimum level (ML) specified in Appendix 4 of the SIP; and in accordance with Section 2.4.1 of the SIP, the Discharger shall report the Reporting Level (RL) and the Method Detection Limit (MDL) with each sample result

[4] On a monthly basis, the Discharger shall report average and maximum daily flows

[5] pH and temperature monitoring must coincide with monthly monitoring for ammonia

[6] Upon complete cessation of chlorine usage at the WWTF, the Discharger may eliminate monitoring for this parameter.

[7] Monitoring shall occur during the first month of surface water discharge and during the second consecutive month thereafter (ie. If monitoring occurs in November, consecutive monitoring shall be performed in January)

[8] Final effluent limitations for this metal are dependent on the hardness of the receiving water. To determine compliance, measured effluent concentrations must be compared to effluent limitations based on receiving water hardness at the time effluent samples are monitored. Effluent limitations shall be determined in accordance with Table E –7, which is attached to this MRP

Parameter	Units	Sample Type	Sampling Frequency	Required Analytical Test Method[3]
Zinc[8]	µg/L	Grab	Monthly	Inductively Coupled Plasma/Mass Spectrometry
2,3,7,8-TCDD	µg/L	Grab	2X / year	EPA Method 1613
Chlorodibromomethane	µg/L	Grab	Monthly	Gas Chromatography
Dichlorobromomethane	µg/L	Grab	Monthly	Gas Chromatography
Bis(2-Ethylhexyl)# Phthalate	µg/L	Grab	Monthly	Gas Chromatography /Mass Spectrometry
Alpha-BHC	µg/L	Grab	Monthly	Gas Chromatography
Heptachlor Epoxide	µg/L	Grab	Monthly	Gas Chromatography
CTR Pollutants[6]	µg/L	Grab	1X / Permit Term [9]	Standard Methods[3]

V. WHOLE EFFLUENT TOXICITY TESTING REQUIREMENTS

A. Acute Toxicity Testing

The Discharger shall conduct whole effluent toxicity (WET) testing to determine compliance with the acute toxicity effluent limitations established in sections IV. A. 1. e. and IV. B. 1. e. of the Order. The Discharger shall meet the following acute toxicity testing requirements:

1. **Test Frequency**. The Discharger shall conduct acute WET testing in accordance with the schedule established by this MRP, as summarized in Table E-3, above, when discharging to surface water.

2. **Sample Type**. For 96-hour static renewal or 96-hour static non-renewal testing, the samples shall be a 24-hour composite samples and shall be representative of the volume and quality of the discharge. Effluent samples shall be collected at Monitoring Location EFF-001.

3. **Test Species**. Test species for acute testing shall be an invertebrate, the water flea, *Ceriodaphnia dubia*, and a vertebrate, the rainbow trout, *Oncorhynchus mykiss*, for at least the first two suites of tests conducted within 12 months after the effective date of the Order. After this screening period, monitoring shall be conducted using the most sensitive species. At least one time every five years, the Discharger shall re-screen with the two species described above and continue routine monitoring with the most sensitive species.

4. **Test Methods**. The presence of acute toxicity shall be estimated as specified in *Methods for Measuring the Acute Toxicity of Effluents and Receiving Waters to Freshwater and Marine Organisms* (USEPA Report No. EPA-821-R-02-012, 5th edition or subsequent editions), or other methods approved by the Executive Officer. Test procedures related to pH control, sample filtration, aeration, temperature control and sample dechlorination shall be performed in accordance with the USEPA

method and fully explained and justified in each acute toxicity report submitted to the Regional Water Board. Control of the pH in acute toxicity tests is allowed, provided the test pH is maintained at the measured effluent pH, and the control of pH is done in a manner that has the least influence on the test water chemistry and on the toxicity of other pH sensitive materials such as some heavy metals, sulfide and cyanide.

5. **Test Dilutions.** The acute toxicity test shall be conducted using 100 percent effluent collected at Monitoring Location EFF-001, when discharging to surface water.

6. **Test Failure.** If an acute toxicity test does not meet all test acceptability criteria, as specified in the test method, the Discharger shall re-sample and re-test as soon as possible, not to exceed 7 days following notification of test failure.

7. **Accelerated Monitoring.** If the result of any acute toxicity test fails to meet the single test minimum limitation established in sections IV. A. 1. eand IV.B.1.e of the Order (70 percent survival), and the testing meets all test acceptability criteria, the Discharger shall take two more samples, one within 14 days, and one within 21 days of receiving the initial sample result. If any of the additional samples do not comply with the three sample median minimum limitation (90 percent survival), the Discharger shall initiate a Toxicity Reduction Evaluation (TRE) in accordance with section VI. C. 2. a of the Order. If the two additional samples are in compliance with the acute toxicity requirement, and the testing meets all test acceptability criteria, then a TRE will not be required. If the discharge has ceased before the additional samples could be collected, the Discharger shall contact the Executive Officer within 21 days with a plan to demonstrate compliance with the acute toxicity effluent limitation.

8. **Notification.** The Discharger shall notify the Regional Water Board in writing 14 days after the receipt of test results exceeding an effluent limitation or trigger. The notification will describe actions the Discharger has taken or will take to investigate and correct the cause(s) of toxicity. It may also include a status report on any actions required by this Order, with a schedule for actions not yet completed. If no actions have been taken, the reasons shall be given.

9. **Reporting**. Test results for acute toxicity tests shall be reported according to section 12 (Report Preparation) of *Methods for Measuring the Acute Toxicity of Effluents and Receiving Waters to Freshwater and Marine Organisms* or in an equivalent format that clearly demonstrates that the Discharger is in compliance with effluent limitations, and other permit requirements.

10. **Ammonia Toxicity**. The acute toxicity test shall be conducted without modifications to eliminate ammonia toxicity.

B. Chronic Toxicity Testing

The Discharger shall conduct chronic whole effluent toxicity (WET) testing to demonstrate compliance with the Basin Plan's narrative water quality objective for toxicity. The Discharger shall meet the following chronic toxicity testing requirements:

1. **Test Frequency.** The Discharger shall conduct chronic WET testing in accordance with the schedule established by this MRP, as summarized in Table E-3, above, when discharging to surface water.

2. **Sample Type**. For 96-hour static renewal or 96-hour static non-renewal testing, the samples shall be 24-hour composite samples and shall be representative of the volume and quality of the discharge. The effluent sample shall be collected at Monitoring Location EFF-001.
3. **Test Species.** Test species for chronic testing shall be a vertebrate, the fathead minnow, *Pimephales promelas* (larval survival and growth test); an invertebrate, the water flea, *Ceriodaphnia dubia* (survival and reproduction test); and a plant, the green alga, *Selanastrum capricornutum* (growth test).

4. **Test Methods**. The presence of chronic toxicity shall be estimated as specified in USEPA's Short-Term Methods for Estimating the Chronic Toxicity of Effluents and Receiving Water to Freshwater Organisms (USEPA Report No. EPA-821-R-02-013, 4th or subsequent editions).
   Test procedures related to pH control, sample filtration, aeration, temperature control and sample dechlorination shall be performed in accordance with the USEPA method and fully explained and justified in each chronic toxicity report submitted to the Regional Water Board. Control of the pH in chronic toxicity tests is allowed, provided the test pH is maintained at the measured pH of the downstream receiving water, and the control of pH is done in a manner that has the least influence on the test water chemistry and on the toxicity of other pH sensitive materials such as some heavy metals, sulfide and cyanide.

5. **Test Dilutions.** The chronic toxicity test shall be conducted using a series of at least five dilutions and a control. The series shall consist of the following dilution series: 12.5, 25, 50, 75, and 100 percent effluent. Control and dilution water should be receiving water at an appropriate location upstream of the discharge point. Laboratory water may be substituted for receiving water, as described in the manual, upon approval by the Regional Water Board Executive Officer. Specifically, for the Selenastrum capricornutum test, synthetic laboratory water with a hardness similar to the receiving water shall be used as the control and dilution water. If the dilution water used is different from the culture water, a second control using culture water shall be used.

6. **Reference Toxicant.** If organisms are not cultured in-house, concurrent testing with a reference toxicant shall be conducted. Where organisms are cultured in-house, monthly reference toxicant testing is sufficient. Reference toxicant tests also shall

be conducted using the same test conditions as the effluent toxicity tests (e.g., same test duration, etc).

7. **Test Failure**. If either the reference toxicant test or the chronic toxicity test does not meet all test acceptability criteria, as specified in the test method, the Discharger shall re-sample and re-test as soon as possible, not to exceed 14 days following notification of test failure.

8. **Notification. T**he Discharger shall notify the Regional Water Board in writing within 14 days after the receipt of test results that indicate an exceedence of the monitoring trigger for chronic toxicity during regular or accelerated monitoring.

9. **Accelerated Monitoring Requirements.** If the result of any chronic toxicity test exceeds a chronic toxicity trigger of 1.0 TUc, and the testing meets all test acceptability criteria, the Discharger shall initiate accelerated monitoring. Accelerated monitoring shall consist of four additional effluent samples, one test conducted approximately every week, over a four–week period. Testing shall commence within 14 days of receipt of the sample results of the exceedence of the chronic toxicity trigger. If the discharge will cease before the additional samples can be collected, the Discharger shall contact the Executive Officer within 21 days with a plan to demonstrate compliance with the chronic toxicity effluent limitation. The following protocol shall be used for accelerated monitoring and TRE implementation.

   a. If the results of four consecutive accelerated monitoring tests do not exceed the effluent limitation, the Discharger may cease accelerated monitoring and resume regular chronic toxicity monitoring. If there is adequate evidence of a pattern of effluent toxicity, however, the Regional Water Board Executive Officer may require that the Discharger initiate a TRE.

   b. If the source(s) of the toxicity is easily identified (i.e. temporary plant upset), the Discharger shall make necessary corrections to the facility and shall continue accelerated monitoring until four consecutive accelerated tests do not exceed the effluent limitation. Upon confirmation that the effluent toxicity has been removed, the Discharger may cease accelerated monitoring and resume regular chronic toxicity monitoring.

   c. If the result of any accelerated toxicity test exceeds an effluent limitation or trigger, the Discharger shall cease accelerated monitoring and initiate a TRE to investigate the cause(s) of, and identify corrective actions to reduce or eliminate effluent toxicity. Within thirty (30) days of notification by the laboratory of the test results exceeding the effluent limitation during accelerated monitoring, the Discharger shall submit a TRE Action Plan to the Regional Water Board including, at minimum:

(1) Specific actions the Discharger took to investigate and identify the cause(s) of toxicity, including a TRE WET monitoring schedule;

(2) Specific actions the Discharger took to mitigate the impact of the discharge and prevent the recurrence of toxicity;

(3) Recommendations for further actions to mitigate continued toxicity, if needed; and

(4) A schedule for implementation of recommended actions.

10. **Ammonia Toxicity.** The chronic toxicity test shall be conducted without modifications to eliminate ammonia toxicity.

C. Chronic Toxicity Reporting

1. **Routine Reporting**. Test results for chronic tests shall be reported according to the acute and chronic manuals and the Monitoring and Reporting Program and shall be attached to the corresponding monthly self-monitoring report. Test results shall include, at a minimum, for each test:

a. sample date(s)

b. test initiation date

c. test species

d. end point values for each dilution (e.g., number of young, growth rate, percent survival)

e. NOEC value(s) in percent effluent

f. IC15, IC25, IC40, and IC50 values (or EC15, EC25…etc.) in percent effluent

g. TUc values (100/NOEC)

h. Mean percent mortality (±s.d.) after 96 hours in 100 percent effluent (if applicable)

i. NOEC and LOEC values for reference toxicant test(s)

j. IC50 or EC50 value(s) for reference toxicant test(s)

k. Available water quality measurements for each test (e.g., pH, DO, temperature, conductivity, hardness, salinity, ammonia)

l. Statistical methods used to calculate endpoints.

m. The statistical output page, which includes the calculation of percent minimum significant difference (PMSD)

2. **Quality Assurance Reporting**. Because the permit requires sublethal hypothesis testing endpoints from Methods 1000.0, 1002.0, and 1003.0 in the test methods manual titled *Short-term Methods for Estimating the Chronic Toxicity of Effluents and Receiving Waters to Freshwater Organisms* (EPA-821-R-02-013, 2002), with-in test variability must be reviewed for acceptability, and variability criteria (upper and lower PMSD bounds) must be applied, as directed under section 10.2.8 – *Test Variability* of the test methods manual. Under section 10.2.8, the calculated PMSD for both reference toxicant test and effluent toxicity test results must be compared with the upper and lower PMSD bounds variability criteria specified in Table 6 – *Variability Criteria (Upper and Lower PMSD Bounds) for Sublethal Hypothesis Testing Endpoints Submitted Under NPDES Permits*, following the review critera in paragraphs 10.2.8.2.1 through 10.2.8.2.5 of the test methods manual. Based on this review, only accepted effluent toxicity test results shall be reported.

3. **Compliance Summary.** Monthly self-monitoring reports submitted by the Discharger shall contain an updated chronology of chronic toxicity test results expressed in TUc, and organized by test species, type of test (survival, growth or reproduction), and monitoring frequency (routine, accelerated, or TRE). The final report shall clearly demonstrate that the Discharger is in compliance with effluent limitations and other permit requirements.

VI. LAND DISCHARGE MONITORING REQUIREMENTS

This section of the standardized permit is not applicable to the City of Ferndale.

VII. RECLAMATION MONITORING REQUIREMENTS

A. Monitoring Location EFF-002

The Discharger shall monitor treated wastewater to be reclaimed and used for irrigation at Monitoring Location EFF-002 as follows.

Table E-4. Effluent Monitoring - Monitoring Location EFF-002

Parameter	Units	Sample Type	Sampling Frequency	Required Analytical Test Method
Flow[9]	mgd	Continuous	Daily	Meter
BOD_5	mg/L	8-hr Composite	Monthly	Standard Method 5210B
TSS	mg/L	8-hr Composite	Monthly	Standard Method 2540D
Settleable Solids	mL/L-hr	8-hr Composite	Weekly	Standard Method 2540F
Total Coliform Organisms	MPN/100 mLs	Grab	Weekly	Standard Method 9221
Ammonia Nitrogen	mg/L N	Grab	Monthly	title 40, section 136
Nitrate Nitrogen	mg/L N	Grab	Monthly	title 40, section 136
Total Phosphorous	mg/L P	Grab	Monthly	title 40, section 136
Total Dissolved Solids	mg/L	Grab	Monthly	Standard Method 2540C
Visual Observations	---	---	Daily	Visual

VIII. RECEIVING WATER MONITORING REQUIREMENTS

A. Monitoring Location R-001

The Discharger shall monitor upstream conditions in the receiving waters at Monitoring Location R-001 during the periods of surface water discharge, as follows.

Table E-5. Receiving Water Monitoring Requirements – R-001

Parameter	Units	Sample Type	Minimum Sampling Frequency	Required Analytical Method
Flow	cfs or mgd		Daily	Gauge or Meter[10]
Dissolved Oxygen	mg/L	Grab	Monthly	title 40, section 136
pH[11]	s.u.	Grab	Monthly	Standard Methods
Temperature[9]	º F	Grab	Monthly	Standard Methods
Turbidity	NTU	Grab	Monthly	Standard Method 2130B
Specific Conductance	micromhos/cm[12]	Grab	Monthly	title 40, section 136

[9] On a monthly basis, the Discharger shall report average and maximum daily flows
[10] The Discharger shall propose a method of measurement for the receiving water flow for approval by the Executive Officer.
[11] pH and temperature monitoring must coincide with monthly monitoring for ammonia
[12] Measured in micromhos/cm at 25 ºC

Parameter	Units	Sample Type	Minimum Sampling Frequency	Required Analytical Method
Ammonia Nitrogen	mg/L N	Grab	Monthly	title 40, section 136
Nitrate Nitrogen	mg/L N	Grab	Monthly	title 40, section 136
Total Nitrogen	mg/L N	Grab	Monthly	title 40, section 136
Total Phosphorous	mg/L P	Grab	Monthly	title 40, section 136
Visual Observations	---	---	Monthly	Visual
CTR Pollutants[13]	µg/L	Grab	1X / Permit Term	Standard Methods

B. Monitoring Location R-002

The Discharger shall monitor downstream conditions in the receiving waters at Monitoring Location R-002 during the periods of surface water discharge, as follows.

Table E-6. Receiving Water Monitoring Requirements – R-002

Parameter	Units	Sample Type	Minimum Sampling Frequency	Required Analytical Method
Dissolved Oxygen	mg/L	Grab	Monthly	title 40, section 136
pH	s.u.	Grab	Monthly	Standard Methods
Temperature	º F	Grab	Monthly	Standard Methods
Hardness[14]	mg/L $CaCO_3$	Grab	Monthly	Standard Methods
Turbidity	NTU	Grab	Monthly	Standard Method 2130B
Specific Conductance	micromhos/cm[15]	Grab	Monthly	title 40, section 136
Visual Observations	---	---	Monthly	Visual

C. Monitoring Location R-003

The Discharger shall monitor downstream conditions in the receiving waters at Monitoring Location R-003 during the periods of surface water discharge, as follows.

[13] Those pollutants identified by the California Toxics Rule at title 40, section 131.38. Monitoring shall occur simultaneously with effluent monitoring for CTR pollutants required by Section IV. A. 1 of the MRP. Analytical methods must achieve the lowest minimum level (ML) specified in Appendix 4 of the SIP; and in accordance with Section 2.4.1 of the SIP, the Discharger shall report the Reporting Level (RL) and the Method Detection Limit (MDL) with each sample result.

[14] Receiving water hardness monitoring must coincide with effluent monitoring for metals

[15] Measured in micromhos/cm at 25 ºC

Table E-7. Receiving Water Monitoring Requirements – R-003

Parameter	Units	Sample Type	Minimum Sampling Frequency	Required Analytical Method
Dissolved Oxygen	mg/L	Grab	Monthly	title 40, section 136
pH	s.u.	Grab	Monthly	Standard Methods
Temperature	º F	Grab	Monthly	Standard Methods
Specific Conductance	micromhos/cm[16]	Grab	Monthly	title 40, section 136
Visual Observations	---	---	Monthly	Visual

IX. OTHER MONITORING REQUIREMENTS

A. Monitoring Location M-CCC

The Discharger shall monitor chlorine residual at the existing WWTF in the chlorine contact chamber at Monitoring Location M-CCC as follows.

Table E-8. Effluent Monitoring - Monitoring Location M-CCC

Parameter	Units	Sample Type	Sampling Frequency	Required Analytical Test Method[17]
Chlorine Residual	mg/L	Grab	Daily	title 40, section 136

B. Rainfall

The Discharger shall monitor and report monthly rainfall to an accuracy of 0.1 inches for comparison to surface water flow and recycled water application rates.

C. Disinfection Process Monitoring for UV Disinfection System

Upon completion and approval of the UV Disinfection System, the following monitoring requirements must be implemented:

1. **Monitoring.** The UV transmittance of the effluent from the UV disinfection system shall be monitored continuously and recorded. The operation UV dose shall be calculated from UV transmittance and exposure time, using lamp age and sleeve fouling factors.

2. **Compliance.** The UV transmittance shall not fall below 55 percent of maximum at any time, unless otherwise approved by California Department of Public Health

[16] Measured in micromhos/cm at 25 ºC
[17] Analytical methods must achieve the lowest minimum level (ML) specified in Appendix 4 of the SIP; and in accordance with Section 2.4.1 of the SIP, the Discharger shall report the Reporting Level (RL) and the Method Detection Limit (MDL) with each sample result

(CDPH). The operational UV dose shall not fall below 100 millijoules per square centimeter (mJ/cm^2) at any time, unless otherwise approved by CDPH.

3. **Reporting.** The Discharger shall report daily average and lowest daily transmittance and operational UV dose on its monthly monitoring reports. If the UV transmittance falls below 55 percent or UV dose falls below 100 $mJ/cm^{2,}$ the event shall be reported to the Regional Water Board and the CDPH by telephone with 24 hours. Any inadequately treated and disinfected wastewater shall be diverted to a storage basin or an upstream process for adequate treatment.

X. REPORTING REQUIREMENTS

A. General Monitoring and Reporting Requirements

1. The Discharger shall comply with all Standard Provisions (Attachment D) related to monitoring, reporting, and recordkeeping.

2. Schedules of Compliance. If applicable, the Discharger shall submit all reports and documentation required by compliance schedules that are established by this Order. Such reports and documentation shall be submitted to the Regional Water Board on or before each compliance date established by the Order. If noncompliance is reported, the Discharger shall describe the reasons for noncompliance and a specific date when compliance will be achieved. The Discharger shall notify the Regional Water Board when it returns to compliance with applicable compliance dates established by schedules of compliance.

B. Self Monitoring Reports (SMRs)

1. At any time during the term of this permit, the State or Regional Water Board may notify the Discharger to electronically submit Self-Monitoring Reports (SMRs) using the State Water Board's California Integrated Water Quality System (CIWQS) Program Web site http://www.waterboards.ca.gov/ciwqs/index.html. Until such notification is given, the Discharger shall submit hard copy SMRs. The CIWQS Web site will provide additional directions for SMR submittal in the event there will be service interruption for electronic submittal.

2. The Discharger shall report in the SMR the results for all monitoring specified in this MRP under sections III through IX. The Discharger shall submit monthly and annual summary SMRs including the results of all required monitoring using USEPA-approved test methods or other test methods specified in this Order. If the Discharger monitors any pollutant more frequently than required by this Order, the results of this monitoring shall be included in the calculations and reporting of the data submitted in the SMR.

3. Monitoring periods and reporting for all required monitoring shall be completed according to the following schedule:

Table E-9. Monitoring Periods and Reporting Schedule

Sampling Frequency	Monitoring Period Begins	Monitoring Period	SMR Due Date
Continuous	September 1, 2009	All	1st day of second calendar month following sampling
Daily	September 1, 2009	Midnight through 11:59 PM or any 24-hour period that reasonably represents a calendar day for purposes of sampling.	1st day of second calendar month following sampling
Weekly	September 1, 2009	Sunday through Saturday	1st day of second calendar month following sampling
Monthly	September 1, 2009	1st day of calendar month through last day of same	1st day of second calendar month following sampling
Twice Annually	September 1, 2009	October 1 through May 15	1st day of second calendar month following sampling
Annually	September 1, 2009	October 1 through May 15	1st day of second calendar month following sampling
1X / Order Term	September 1, 2009	October 1 through May 15	May 1, 2012

4. Reporting Protocols. The Discharger shall report with each sample result the applicable Reporting Level (RL) and the current Method Detection Limit (MDL), as determined by the procedure in title 40, section 136.

The Discharger shall report the results of analytical determinations for the presence of chemical constituents in a sample using the following reporting protocols.

a. Sample results greater than or equal to the RL shall be reported as measured by the laboratory (i.e., the measured chemical concentration in the sample).

b. Sample results less than the RL, but greater than or equal to the laboratory's MDL, shall be reported as "Detected, but Not Quantified," or DNQ. The estimated chemical concentration of the sample shall also be reported.

For the purposes of data collection, the laboratory shall write the estimated chemical concentration next to DNQ as well as the words "Estimated Concentration" (may be

shortened to "Est. Conc."). The laboratory may, if such information is available, include numerical estimates of the data quality for the reported result. Numerical estimates of data quality may be percent accuracy (± a percentage of the reported value), numerical ranges (low to high), or any other means considered appropriate by the laboratory.

c. Sample results less than the laboratory's MDL shall be reported as "Not Detected," or ND.

d. Dischargers are to instruct laboratories to establish calibration standards so that the ML value (or its equivalent if there is differential treatment of samples relative to calibration standards) is the lowest calibration standard. At no time is the Discharger to use analytical data derived from *extrapolation* beyond the lowest point of the calibration curve.

5. The Discharger shall submit SMRs in accordance with the following requirements:

a. The Discharger shall arrange all reported data in a tabular format. The data shall be summarized to clearly illustrate whether the facility is operating in compliance with interim and/or final effluent limitations. The reported data shall include calculation of all effluent limitations that require averaging, taking of a median or other computation. The Discharger is not required to duplicate the submittal of data that is entered in a tabular format within CIWQS. When electronic submittal of data is required and CIWQS does not provide for entry into a tabular format within the system, the Discharger shall electronically submit the data in a tabular format as an attachment. During periods of land discharge, the reports shall certify "land discharge".

b. The Discharger shall attach a cover letter to the SMR. The information contained in the cover letter shall clearly identify:

(1) Facility name

(2) WDID number

(3) Applicable period of monitoring and reporting

(4) Violations of the WDRs (identified violations must include a description of the requirement that was violated and a description of the violation)

(5) Corrective actions taken or planned; and

(6) The proposed time schedule for corrective actions.

c. SMRs must be submitted to the Regional Water Board, signed and certified as required by the Standard Provisions (Attachment D), to the address listed below:

North Coast Regional Water Quality Control Board
5550 Skylane Blvd, Suite A
Santa Rosa, CA 95403

C. Discharge Monitoring Reports (DMRs)

1. As described in section X.B.1 above, at any time during the term of this permit, the State or Regional Water Board may notify the Discharger to electronically submit SMRs that will satisfy federal requirements for submittal of Discharge Monitoring Reports (DMRs). Until such notification is given, the Discharger shall submit DMRs in accordance with the requirements described below.

2. For Dischargers designated as NPDES major dischargers, DMRs must be signed and certified as required by the standard provisions (Attachment D). The Discharge shall submit the original DMR and one copy of the DMR to the address listed below:

Standard Mail	FedEx/UPS/ Other Private Carriers
State Water Resources Control Board Division of Water Quality c/o DMR Processing Center PO Box 100 Sacramento, CA 95812-1000	State Water Resources Control Board Division of Water Quality c/o DMR Processing Center 1001 I Street, 15th Floor Sacramento, CA 95814

3. All discharge monitoring results must be reported on the official USEPA pre-printed DMR forms (EPA Form 3320-1). Forms that are self-generated or modified cannot be accepted.

4. If USEPA requires dischargers designated as NPDES minor dischargers to submit DMRs in the future, the Discharger shall submit DMRs as specified in C.2 and C.3 above at the request of the Regional Water Board Executive Officer or the USEPA Regional Administrator.

D. Other Reports

1. Special Studies Submittals. The Discharger shall report the results of any special studies required by Special Provisions VI. C. 2. a. of this Order.

2. Annual Report. The Discharger shall submit an Annual Report to the Regional Water Board for each calendar year. The report shall be submitted by March 1st of the following year. The report shall, at a minimum, include the following.

a. **Monitoring Data Summaries.** Both tabular and, where appropriate, graphical summaries of the monitoring data and disposal records from the previous year. If the Discharger monitors any pollutant more frequently than required by this Order, using test procedures approved under title 40, section 136 or as specified in this Order, the results of this monitoring shall be included in the calculation and report of the data submitted SMR.

b. **Compliance Reporting**. A comprehensive discussion of the facility's compliance (or lack thereof) with all effluent limitations and other WDRs, and the corrective actions taken or planned, which may be needed to bring the discharge into full compliance with the Order.

c. **Sanitary Sewer System Reporting**. The Discharger shall submit, as part of its annual report to the Regional Water Board, a description of the Discharger's activities within the sanitary sewer system over the previous twelve months. The report shall contain:

   (1) A description of any change in the local legal authorities enacted to implement the Sewer System Management Plan (SSMP);

   (2) A summary of the SSOs that occurred in the past year. The summary shall include the date, location of overflow point, affected receiving water (if any), estimated volume, and cause of the SSO, and the names and addresses of the responsible parties as well as the names and addresses of the property owner(s) affected by the sanitary sewer overflow.

   (3) A summary of compliance and enforcement activities during the past year. The summary shall include fines, other penalties, or corrective actions taken as a result of the SSO. The summary shall also include a description of public participation activities to involve and inform the public;

   (4) Documentation that all feasible steps to stop and mitigate impacts of sanitary sewer overflows have been taken.

d. **Source Control Activity Reporting**. The Discharger shall submit, as part of its annual report to the Regional Water Board, a description of the Discharger's source control activities, as required by Provision VI.C.5.b. of Order No. R1-2007-0013, during the past year. This annual report is due on March 1st of each year.

   (1) A copy of the source control standards.

   (2) A description of the waste hauler permit system.

(3) A summary of the compliance and enforcement activities during the past year. The summary shall include the names and addresses of any industrial or commercial users under surveillance by the Discharger, an explanation of whether they were inspected, sampled, or both, the frequency of these activities at each user, and the conclusions or results from the inspection or sampling of each user.

(4) A summary of any waste survey results.

(5) A summary of public participation activities to involve and inform the public.

e. Biosolids Handling and Disposal Activity Reporting. The Discharger shall submit, as part of its annual report to the Regional Water Board, a description of the Discharger's solids handling, disposal and reuse activities over the previous twelve months. At a minimum, the report shall contain:

(1) Annual sludge production, in dry tons and percent solids

(2) A schematic diagram showing sludge handling facilities (e.g., digesters, thickeners, drying beds, etc.), if any and a solids flow diagram.

(3) Methods of final disposal of sludge:

(a) For any portion of sludge discharged to a sanitary landfill, the Discharger shall provided the volume of sludge transported to the land fill, the names and locations of the facilities receiving sludge, the Regional Water Board's WDRs order number for the regulated landfill, and the landfill classification.

(b) For any portion of sludge discharged through land application, the Discharger shall provide the volume of biosolids applied, the date and locations where biosolids were applied, the Regional Water Board's WDRs order number for the regulated discharge, a demonstration that the discharge was conducted in compliance with applicable permits and regulations, and, if applicable, corrective actions taken or planned to bring the discharge into compliance with WDRs.

(c) For any portion of sludge further treated through composting, the Discharger shall provide a summary of the composting process, the volume of sludge composted, and a demonstration and signed certification statement that the composting process and final product met all requirements for Class A biosolids.

f. Storm Water Reporting. The Discharger shall submit, as part of its annual report to the Regional Water Board, an evaluation of the effectiveness of the Discharger's BMPs to control the run-on of storm water to the treatment facility site, as well as activities to maintain and upgrade these BMPs.

g. Recycled Water Report. The Discharger shall submit, as part of its annual report to the Regional Water Board a recycled water summary report, containing the following information:

(a) Total volume of recycled water supplied to all recycled water users for each month of the reporting period;

(b) Locations of recycled water use sites, including a map and tabular summary with acreage and name of property owner;

(c) A summary of user inspections conducted by the Discharger, including the number and location of any cross-connections and/or improper backflow prevention devices and all observations of misuse of recycled water;

(d) A summary of recycled water user violations of the Discharger's rules and regulations;

(e) A summary of operational problems, plant equipment malfunctions, and any diversion of recycled water which does not meet the requirements specified in this Order.

(f) A record of equipment or process failures initiating an alarm, as well as any corrective and preventative actions;

Table E-10. Final Effluent Limitations for Hardness Dependent Metals

Hardness (mg/L as $CaCO_3$)	Copper		Lead		Nickel		Zinc	
	AMEL (µg/L)	MDEL (µg/L)	AMEL (µg/L)	MDEL (µg/L)	AMEL (µg/L)	MDEL (µg/L)	AMEL (µg/L)	MDEL (µg/L)
5 – 9	0.41	0.83	0.06	0.12	3.4	6.8	4.7	9.6
10 – 14	0.80	1.6	0.14	0.28	6.07	12	8.5	17
15 – 19	1.2	2.3	0.23	0.47	8.6	17	12	24
20 – 24	1.5	3.1	0.33	0.67	10	22	15	31
25 – 29	1.9	3.8	0.45	0.89	13	26	18	37
30 – 34	2.2	4.5	0.56	1.1	15	31	21	43
35 – 39	2.6	5.2	0.68	1.4	18	35	24	49
40 – 44	2.9	5.9	0.81	1.6	20	40	27	55
45 – 49	3.3	6.7	0.94	1.9	22	44	30	61
50 – 54	3.6	7.3	1.1	2.2	24	48	33	66
55 – 59	4.0	8.0	1.2	2.4	26	52	36	72
60 – 64	4.3	8.6	1.4	2.7	28	55	39	78
65 – 69	4.6	9.3	1.5	3.0	30	59	41	83
70 – 74	5.0	10	1.7	3.3	32	63	44	88
75 – 79	5.3	11	1.8	3.6	33	67	47	94
80 – 84	5.6	11	2.0	3.9	35	71	49	99
85 – 89	6.0	12	2.1	4.2	37	75	52	100
90 – 94	6.3	13	2.3	4.6	39	78	55	110
95 – 99	6.6	13	2.4	4.9	41	82	57	110
100 – 104	7.0	14	2.6	5.2	43	85	60	120
105 – 109	7.3	15	2.8	5.6	44	89	62	120
110 – 114	7.6	15	2.9	5.9	46	93	65	130
115 – 119	8.0	16	3.1	6.2	48	96	67	130
120 – 124	8.3	17	3.3	6.6	50	100	70	140
125 – 129	8.6	17	3.5	6.9	51	100	72	140
130 – 134	8.9	18	3.6	7.3	53	110	74	150
135 – 139	9.2	19	3.8	7.6	55	110	77	150
140 – 144	9.6	19	4.0	8.0	57	110	79	160
145 – 149	9.9	20	4.2	8.4	58	120	82	160
150 – 154	10	20	4.4	8.7	60	120	84	170
155 – 159	11	21	4.5	9.1	62	120	86	170
160 – 164	11	22	4.7	9.5	63	130	89	180
165 – 169	11	22	4.9	9.9	65	130	91	180
170 – 174	11	23	5.1	10	67	130	93	190
175 – 179	12	24	5.3	10	68	140	96	190
180 – 184	12	24	5.5	11	70	140	98	200
185 – 189	12	25	5.7	11	72	140	100	200

Hardness (mg/L as $CaCO_3$)	Copper		Lead		Nickel		Zinc	
	AMEL (µg/L)	MDEL (µg/L)	AMEL (µg/L)	MDEL (µg/L)	AMEL (µg/L)	MDEL (µg/L)	AMEL (µg/L)	MDEL (µg/L)
190 – 194	13	26	5.9	12	73	150	100	210
195 – 199	13	26	6.1	12	75	150	100	210
200 – 204	13	27	6.3	13	77	150	110	220
205 – 209	14	27	6.5	13	78	160	110	220
210 – 214	14	28	6.7	13	80	160	110	220
215 – 219	14	29	6.9	14	81	160	110	230
220 – 224	15	29	7.1	14	83	170	120	230
225 – 229	15	30	7.3	15	85	170	120	240
230 – 234	15	31	7.5	15	86	170	120	240
235 – 239	16	31	7.7	15	88	180	120	250
240 – 244	16	32	7.9	16	89	180	130	250
245 – 249	16	33	8.1	16	91	180	130	260
250 – 254	17	33	8.3	17	93	190	130	260
255 – 259	17	34	8.6	17	94	190	130	260
260 – 264	17	34	8.8	18	96	190	130	270
265 – 269	17	35	9.0	18	97	190	140	270
270 – 274	18	36	9.2	18	99	200	140	280
275 – 279	18	36	9.4	19	100	200	140	280
280 – 284	18	37	9.6	19	100	200	140	290
285 – 289	19	37	9.9	20	100	210	140	290
290 – 294	19	38	10	20	100	210	150	290
295 – 299	19	39	10	21	110	210	150	300
300 – 309	19	39	11	21	110	220	150	300
310 – 319	20	40	11	22	110	220	160	310
320 – 329	21	41	11	23	110	230	160	320
330 – 339	21	42	12	24	120	230	160	330
340 – 349	22	44	12	25	120	240	170	340
350 – 359	22	45	13	26	120	250	170	350
360 – 369	23	46	13	27	130	250	180	350
370 – 379	23	47	14	28	130	260	180	360
380 – 389	24	48	14	29	130	260	180	370
390 – 399	24	49	15	29	130	270	190	380
≥400	25	50	15	30	140	280	190	390

ATTACHMENT F – FACT SHEET

Table of Contents

Attachment F – Fact Sheet F-3
I. ..... Permit Information F-3
II. .... Facility Description F-4
A. Description of Wastewater Treatment F-5
B. Discharge Points and Receiving Waters F-6
C. Summary of Existing Requirements and Self-Monitoring Report (SMR) Data F-7
D. Compliance Summary F-9
E. Planned Changes F-10
III. ... Applicable Plans, Policies, and Regulations F-11
A. Legal Authorities F-11
B. California Environmental Quality Act (CEQA) F-11
C. State and Federal Regulations, Policies, and Plans F-11
D. Impaired Water Bodies on CWA 303(d) List F-14
E. Other Plans, Polices and Regulations F-16
IV.... Rationale For Effluent Limitations and Discharge Specifications F-16
A. Discharge Prohibitions F-17
B. Technology-Based Effluent Limitations F-20
1. Scope and Authority F-20
2. Applicable Technology-Based Effluent Limitations F-22
C. Water Quality-Based Effluent Limitations (WQBELs) F-25
1. Scope and Authority F-25
2. Applicable Beneficial Uses and Water Quality Criteria and Objectives F-29
3. Determining the Need for WQBELs F-31
4. WQBEL Calculations F-40
5. Whole Effluent Toxicity (WET) F-42
D. Final Effluent Limitations F-43
1. Satisfaction of Anti-Backsliding Requirements F-43
2. Satisfaction of Antidegradation Policy F-43
3. Stringency of Requirements for Individual Pollutants F-44
4. Summary of Final Effluent Limitations F-45
E. Interim Effluent Limitations F-49
F. Land Discharge Specifications F-49
G. Reclamation Specifications F-49
V..... Rationale for Receiving Water Limitations F-49
A. Surface Water F-49
B. Groundwater F-49
VI.... Rationale for Monitoring and Reporting Requirements F-50
A. Influent Monitoring F-50
B. Effluent Monitoring F-50

C. Whole Effluent Toxicity Testing Requirements F-52
D. Receiving Water Monitoring F-54
E. Other Monitoring Requirements F-55
VII. Rationale for Provisions F-55
A. Standard Provisions F-55
B. Regional Water Board Standard Provisions F-55
C. Special Provisions F-56
1. Reopener Provisions F-56
2. Special Studies and Additional Monitoring Requirements F-57
3. Best Management Practices and Pollution Prevention F-58
4. Construction, Operation, and Maintenance Specifications F-58
5. Special Provisions for Municipal Facilities (POTWs Only) F-59
6. Other Special Provisions - Stormwater F-61
7. Compliance Schedules F-62
VIII. Public Participation F-62
A. Notification of Interested Parties F-62
B. Written Comments F-62
C. Public Hearing F-62
D. Waste Discharge Requirements Petitions F-63
E. Information and Copying F-63
F. Register of Interested Persons F-63
G. Additional Information F-63

List of Tables

Table F-1. Facility Information F-3
Table F-2. Historic Effluent Limitations and Monitoring Data – Discharge Point 001 F-8
Table F-3. Historic Effluent Limitations and Monitoring Data – Discharge Point 002 ..... F-9
Table F-4. Basin Plan Beneficial Uses F-12
Table F-5. Technology-Based Effluent Limitations Existing WWTF- Discharge Point 001 ..... F-23
Table F-6. Technology-Based Effluent Limitations New WWTF- Discharge Point 001 ..... F-24
Table F-7. Applicable Water Quality Criteria F-30
Table F-8. Summary of RPA Results F-36
Table F-9. Determination of Long Term Averages F-41
Table F-10 Determination of Final WQBELs for Priority Pollutants Based on Aquatic Life Criteria F-41
Table F-11. Determination of Final WQBELs Based on Human Health Criteria F-42
Table F-12. Final Effluent Limitations Existing WWTF – Discharge Point 001 ..... F-45
Table F-13. Effluent Limitations New WWTF – Discharge Point 001 ..... F-47
Table F-14. Required Effluent Monitoring Retained From Previous Permit F-50
Table F-15. Required Receiving Water Monitoring Retained From Previous Permit F-54

ATTACHMENT F – FACT SHEET

As described in section II of this Order, this Fact Sheet includes the legal requirements and technical rationale that serve as the basis for the requirements of this Order.

This Order has been prepared under a standardized format to accommodate a broad range of discharge requirements for dischargers in California. Only those sections or subsections of this Order that are specifically identified as "not applicable" have been determined not to apply to this Discharger. Sections or subsections of this Order not specifically identified as "not applicable" are fully applicable to this Discharger.

I. PERMIT INFORMATION

The following table summarizes administrative information related to the facility.

Table F-1. Facility Information

WDID	1B83136OHUM
Discharger	City of Ferndale
Name of Facility	City of Ferndale Wastewater Treatment Facility
Facility Address	701 Port Kenyan Road Ferndale, CA 95536 Humboldt County
Facility Contact, Title and Phone	Jay Parrish, City Manager, (707) 786-4224
Persons Authorized to Sign and Submit Reports	Jay Parrish, City Manager Doug Culbert, Chief Operator
Mailing Address	834 Main Street, P.O. Box 1095, Ferndale, CA 95536
Billing Address	834 Main Street, P.O. Box 1095, Ferndale, CA 95536
Type of Facility	Publicly Owned Treatment Works
Major or Minor Facility	Minor
Threat to Water Quality	2
Complexity	A
Pretreatment Program	No
Reclamation Requirements	Yes - Producer
Existing Facility Permitted Design Flow	0.576 million gallons per day (mgd) Average Dry Weather Flow Treatment Capacity (ADWF)

Table F-1. Facility Information continued

New Facility Permitted Design Flow	0.55 mgd ADWF 0.95 mgd Peak Wet Weather Flow Treatment Capacity (PWWF)
Watershed	Lower Eel River
Receiving Water	Francis Creek/Salt River
Receiving Water Type	Freshwater

A. The City of Ferndale (hereinafter the Discharger) is the owner and operator of wastewater collection, treatment, reclamation, and disposal systems – a publicly owned treatment works (POTW). For the purposes of this Order, references to the "discharger" or "permittee" in applicable federal and state laws, regulations, plans, or policy are held to be equivalent to references to the Discharger herein.

B. The City of Ferndale discharges secondary treated wastewater to Francis Creek/the Salt River, waters of the United States, and is currently regulated by Order No. R1-2008-0038, which was adopted on June 12, 2008. The POTW also provides secondary treated wastewater for reclamation/irrigation use on neighboring agricultural land. The terms and conditions of the current Order remain in effect until new Waste Discharge Requirements and National Pollutant Discharge Elimination System (NPDES) permit requirements are adopted pursuant to this Order.

C. The Discharger submitted a Report of Waste Discharge, dated January 15, 2009, and applied for an NPDES permit renewal proposing construction of a new wastewater treatment facility (WWTF) to discharge at existing Discharge Point 001 an ADWF up to 0.55 mgd and a PWWF up to 0.95 mgd of treated wastewater. Until the new WWTF is constructed and operational, the Discharger will continue to operate the existing WWTF. The application was deemed complete on February 12, 2009.

II. FACILITY DESCRIPTION

The Discharger owns and operates a municipal wastewater treatment facility (WWTF) and associated wastewater collection, reclamation, and disposal facilities that serve a population of 1,457 residential and commercial users. From October 1 through May 14, treated wastewater is discharged to Francis Creek at its confluence with the Salt River and from May 15 through September 30, treated wastewater is applied to neighboring agricultural land.

A. Description of Wastewater Treatment

The City of Ferndale's wastewater treatment facility, located north of the City near the confluence of Francis Creek and the Salt River, treats municipal wastewater from the City's 1,457 residents, outlying areas, and several commercial facilities. Secondary treated wastewater is discharged to Francis Creek at its confluence with the Salt River from October 1 through May 14, and is delivered for irrigation/reclamation use on neighboring agricultural land owned by Elias and Marilyn Sousa from May 15 through September 30 of each year. The Salt River is tributary to the Lower Eel River within the Ferndale Hydrologic Subarea of the Lower Eel River Hydrologic Area.

Flowing by gravity from the municipal collection system, influent wastewater enters the headworks of the treatment facility, which includes a comminuter, and is pumped by two 25 horsepower submersible pumps to a 5.6 acre oxidation pond. Natural aeration in the oxidation pond is supplemented by two 5 horsepower blowers that aerate through submerged air diffuser grids. Based on Discharger records, solids have not been removed from the oxidation pond. Measurement at five locations in the pond shows an average depth of solids on the bottom of the oxidation pond of 8 inches.

From the oxidation pond, wastewater flows through a manually controlled gate to a one acre polishing pond and then through a baffle and control gate to a chlorine contact basin. Disinfection is accomplished with chlorine gas; sulfur dioxide is used for dechlorination during periods of discharge to Francis Creek / the Salt River. Treated wastewater is not dechlorinated prior to its use for agricultural irrigation.

In early 2008 the treatment facility reconfigured the pumping mechanisms which discharge treated effluent from the chlorine contact chamber. The new configuration limits operation to only one effluent pump at any given time. Therefore, the dry weather design flow has decreased from a dry weather treatment capacity of 1.0 mgd to the current dry weather design capacity of 0.576 mgd. Auxiliary pumping is implemented in the wintertime to manage peak flows for short durations. Actual influent flows reported by the Discharger are as follows.

The Discharger previously reported a high rate of inflow and infiltration (I&I) – an average rate of approximately 0.5 mgd during the rainy season with a peak daily rate of approximately 3.6 mgd (Spencer Engineering and Construction Management, 2006). Subsequently the Discharger identified collection system improvements and adopted a municipal ordinance to reduce I/I through testing of sewer laterals and their rehabilitation, where appropriate.

The Discharger has identified and implemented significant collection system improvements. The Discharger has rehabilitated manholes and replaced or repaired

several faulty portions of collection lines within its collection system. Discharger self monitoring reports submitted during the 2008/2009 wet season show reduced rates of inflow and infiltration. The current average wet weather flows are approximately 0.6 mgd with peak flows less than 2.5 mgd. Average dry weather flows are reported around 0.15 mgd. The average annul flow at the existing WWTF between January 2007 and March 2009 is 0.43 mgd.

The Discharger plans to construct a new WWTF within the effective period of this Order. The new WWTF system will be located adjacent to the existing headworks facility and will provide tertiary treatment of wastewater. Raw wastewater will flow from the municipal collection system by gravity to the headworks. Within the headworks, a comminutor and bar screen will provide primary treatment. Wastewater from the headworks up to 0.95 mgd will be pumped to a selector tank then flow by gravity to one of two rectangular extended aeration basins for biological treatment. From the aeration basins wastewater will flow by gravity to the adjacent rectangular clarifiers. Return activated sludge (RAS) will be selectively injected into the selector tank and aeration basins as appropriate to achieve maximum nitrogen removal efficiencies. Aerobically digested sludge will be pumped to a belt press for dewatering. The sludge will automatically be dumped into a truck for off site recycling or disposal. Clarified wastewater will undergo disc filtration prior to ultraviolet disinfection. A holding basin will be available at the end of the treatment train for temporary storage of treated effluent during periods of land application. Variable drive pumps will be located within the basin to provide continuous flows when discharging to surface water.

Influent exceeding 0.95 mgd will automatically be diverted from the headworks to a wet-weather flow equalization basin, which will be located in the existing WWTF oxidation pond, once offline. Flows from the wet-weather equalization basin will automatically flow back to the headworks to proceed with full treatment through the WWTF once influent flows subside below 0.95 mgd.

B. Discharge Points and Receiving Waters

During the discharge season, the treatment plant discharges to Francis Creek at Discharge Point 001 (40º 35’ 40’ N latitude and 124º 15’ 44” W longitude), approximately 600 feet upstream of its confluence with the Salt River, within the Ferndale Subarea of the Lower Eel River Hydrologic Area. The Basin Plan limit discharges to the Eel River and its tributaries to one percent of the receiving water flow (1:100) unless an exception to the requirement is granted by the Regional Water Board. (See section III.C. of this Fact Sheet.) Exceptions are given for cause on a case-by-case basis, taking into consideration:

- the reliability of the wastewater treatment facility;
- whether the discharge of waste is limited to rates and constituent levels that protect the beneficial uses of the receiving waters;
- whether reasonable alternatives for reclamation have been addressed to limit the amount of the wastewater to be discharged;
- whether the exception complies with state and federal antidegradation policies; and
- whether there is any discharge of waste to surface waters during the period of May 15 through September 30.

In order to consistently achieve effluent of sufficient quality to protect beneficial uses and become eligible for an exception to the Basin Plan discharge rate requirements, the Discharger has proposed construction of the new WWTF described above.

Hydraulic conditions of the Francis Creek / Salt River watershed have been degrading over time resulting in a higher sediment load and reduced flows. Watershed-wide plans for restoration of Francis Creek and the Salt River are underway that may affect and possibly improve the hydraulic configuration of the WWTF effluent receiving water area. Discharge Point 001 will remain unchanged in the new permit, with the ultimate receiving water remaining at the confluence of the Salt River.

C. Summary of Existing Requirements and Self-Monitoring Report (SMR) Data

1. Effluent limitations contained in Order No. R1-2008-0038 for discharges from Discharge Point 001 (Monitoring Location EFF-001) and representative monitoring data from the term of Order No. R1-2008-0038 are as follows:

Table F-2. Historic Effluent Limitations and Monitoring Data – Discharge Point 001

Parameter	Units	Effluent Limitations			Effluent Data August 2008 – January 2009	
		Average Monthly[1]	Average Weekly	Maximum Daily	Mean	Maximum
Biochemical Oxygen Demand 5-day @ 20°C	mg/L	30	45	---	11	14
	lbs/day[2,3]	144	216	---	40	130
	% removal	65	---	---	90	82[4]
Total Suspended Solids	mg/L	44	66	---	10	17
	lbs/day[3 4]	211	317	---	39	129
	% removal	65	---	---	92	86[4]
Settleable Solids	ml/L	0.1	---	0.2	0.00	0.00
Total Coliform Organisms	MPN/100 ml	23 [5]	---	230	2[6]	1600
pH	standard units	---	---	6.5 - 8.5	7.4	7.6
Chlorine Residual	mg/L	0.01	---	0.02	0.00	0.00
Copper[6]	µg/L	4.0	---	8.0	5.6	5.6
Lead [67]	µg/L	1.2	---	2.4	<1.0	<1.0
Mercury	µg/L	0.05	---	0.10	<0.05	<0.05
Nickel[6 7]	µg/L	26	---	52	5.3	8.5
Zinc [6]	µg/L	36	---	72	8.7	9.7
2,3,7,8 TCDD	µg/L	0.000000013	---	0.000000026	no data	no data
Chlorodibromomethane	µg/L	0.401	---	0.804	<0.05	<0.05
Dichlorobromomethane	µg/L	0.56	---	1.1	1.4	1.8
Bis(2-Ethylhexyl)# Phthalate	µg/L	1.8	---	3.6	<1.0	<1.0

[1] See Attachment A for definitions
[2] The mass discharge (lbs/day) is obtained from the following calculation for any calendar week or month:

$$\frac{8.34}{N}\sum_{i}^{N} Q_i C_i$$

in which N is the number of samples analyzed in any calendar week or month. Q_i and C_i are the flow rate (mgd) and the constituent concentration (mg/L), respectively, which are associated with each of the N grab samples, which may be taken in any calendar week or month. If a composite sample is taken, C_i is the concentration measured in the composite sample; and Q_i is the average flow rate occurring during the period over which samples are composited.
[3] Mass-based effluent limitations are based on the wet weather design flow of 1.0 mgd.
[4] Refers to least reported percent removal
[5] The median of all samples collected in a 30-day calendar period.
[6] Represents median of values reported.

Parameter	Units	Effluent Limitations			Effluent Data August 2008 – January 2009	
		Average Monthly[1]	Average Weekly	Maximum Daily	Mean	Maximum
alpha-BHC	µg/L	0.0039	---	0.0078	<0.05	<0.05
Heptachlor Epoxide	µg/L	0.0001	---	0.0002	<0.05	<0.05
Acute Toxicity	% Survival	Acute toxicity tests must show 90% survival or greater, 70% percent of the time based on monthly medians, and never below 70% survival			100 percent survival in all test results	

Table F-3. Historic Effluent Limitations and Monitoring Data – Discharge Point 002

Parameter	Units	Effluent Limitations			Effluent Data August 2008 - February 2009	
		Average Monthly	Average Weekly	Maximum Daily	Mean	Maximum
Biochemical Oxygen Demand 5-day @ 20°C	mg/L	30	---	---	18	25
Total Suspended Solids	mg/L	30	---	---	21	25
Settleable Solids	mL/L-hr	0.1	---	0.2	0.00	0.00
Total Coliform Organisms	MPN/100 mL	23[5]	---	230	<2	4

D. Compliance Summary

Because discharges from the City's wastewater treatment plant consistently exceeded one percent of the flow in Francis Creek / Salt River and thereby violated a discharge prohibition established by the Basin Plan, on May 15, 2003, the Regional Water Board adopted Cease and Desist Order (CDO) No. R1-2003-0049. The CDO established a schedule, including specific milestones, for the Discharger to come into compliance with the applicable prohibition against discharges of treated wastewater that occur between October 1 and May 14 to the Eel River and its tributaries exceeding one percent of the flow of the receiving stream.

On October 12, 2005, the Regional Water Board modified CDO No. R1-2003-0049 by adopting CDO No. R1-2005-0087, which imposed a restriction prohibiting new flows to the WWTF unless an offset of 2:1 inflow reduction was achieved. In addition

to ongoing violation of the 100 to 1 discharge requirement, this CDO described consistent depression of dissolved oxygen levels in Francis Creek / Salt River, caused by discharges from the City's wastewater treatment facility, to concentrations below receiving water limitations established by the Basin Plan and incorporated into the City's discharge permit. Revised CDO R1-2005-0087 required the City to cease and desist from discharging and threatening to discharge waste in violation of the terms of its discharge permit, in particular the requirements to limit discharge during October 1 to May 14 to one percent of the receiving water's flow and to maintain specific dissolved oxygen levels in the receiving stream. The CDO also established a specific compliance schedule, which included several tasks to be completed before a final compliance date of October 1, 2008.

Efforts to comply with the requirements of CDO No. R1-2005-0087 resulted in improvements to the dissolved oxygen levels in Francis Creek / Salt River downstream of the City's point of discharge. However, in 2006 and again in 2008 the Discharger requested additional time to achieve full compliance with its discharge permit. In particular, the Discharger pointed to the needs to secure financing, design plans, obtain permits, and complete new construction and/or modifications to existing facilities as justification for extending the deadlines established by previous Cease and Desist Orders. The Regional Water Board adopted CDO No. R1-2006-0109 and CDO No. R1-2008-0110 on November 29, 2006 and December 11, 2008 respectively, amending the previous CDOs and establishing a revised schedule. The Discharger is currently on schedule to achieve full compliance with discharge requirements by November 1, 2011.
In addition to being subject to the Cease and Desist Orders described above, Administrative Civil Liability Order (ACLO) No. R1-2006-0077 was adopted by the Regional Water Board on September 20, 2006. The ACLO assessed mandatory minimum penalties for numerous late submittals (up to 211 days late) of self monitoring reports. To satisfy the assessed penalties of $57,000 and $69,000, the City paid a sum of $48,000 and, in lieu of paying the remaining $78,000 and in accordance with the *State Water Resources Control Board's Enforcement Policy*, agreed to complete a Supplemental Environmental Project (SEP).

E. Planned Changes

The Discharger has completed 50% of the engineered design for the new WWTF (described under section II.A. above) to replace the current facility. This Order will serve to transition from the existing WWTF to the new WWTF and therefore contains effluent limitations specific to each. The new WWTF is expected to improve compliance by providing tertiary treated effluent using a combination of extended aeration, nutrient removal, filtration and ultraviolet disinfection. The existing oxidation pond will be transformed and used for wet-weather flow equalization, allowing peak flows to be normalized as influent flows subside.
On January 30, 2009, the Discharger submitted a request for an exception to Basin Plan discharge rate requirements. The exception request addressed requirements

contained in the Implementation Plan section of the Basin Plan (specifically at page 4-2.00). The exception request identified each constituent of concern (COC) known or reasonably thought to be present in POTW effluent; documented existing water quality for each COC in the receiving water upstream of POTW influence; and compared the water quality objectives necessary to support the most sensitive beneficial uses identified for the receiving water in the Basin Plan against the levels of each COC and their cumulative impacts. Considering the potential receiving water quality and flows that can be achieved with the new WWTF, the models submitted to support the exception request predicted that discharges of tertiary-treated effluent from the new WWTF will result in dissolved oxygen levels in downstream receiving water above the Basin Plan minimum of 7.0 mg/l. Further, the exception request concludes that ammonia concentrations will be greatly improved and phytoplankton chlorophyll-a levels reduced in downstream receiving water. Based upon the evaluation of the information submitted in support of the exception request, the discharge of effluent from the new WWTF at one hundred percent of the receiving water flow (1:1) would be protective of beneficial uses of receiving water.

III. APPLICABLE PLANS, POLICIES, AND REGULATIONS

The requirements contained in the proposed Order are based on the requirements and authorities described in this section. This section provides supplemental information, where appropriate, for the plans, policies, and regulations relevant to the discharge.

A. Legal Authorities

This Order is issued pursuant to section 402 of the federal Clean Water Act (CWA) and implementing regulations adopted by the U.S. Environmental Protection Agency (USEPA) and chapter 5.5, division 7 of the California Water Code (commencing with section 13370). It shall serve as a NPDES permit for point source discharges from this facility to surface waters. This Order also serves as Waste Discharge Requirements (WDRs) pursuant to article 4, chapter 4, division 7 of the Water Code (commencing with section 13260).

B. California Environmental Quality Act (CEQA)

Under Water Code section 13389, this action to adopt an NPDES permit is exempt from the provisions of CEQA, Public Resources Code sections 21100 through 21177.

C. State and Federal Regulations, Policies, and Plans

1. **Water Quality Control Plans.** The Regional Water Board adopted a *Water Quality Control Plan for the North Coast Region* (hereinafter Basin Plan) that designates beneficial uses, establishes water quality objectives, and contains implementation programs and policies to achieve those objectives for all waters addressed through the plan. In addition, the Basin Plan implements State

Water Resources Control Board (State Water Board) Resolution No. 88-63, which establishes State policy that all waters, with certain exceptions, should be considered suitable or potentially suitable for municipal or domestic supply. Beneficial uses applicable to surface waters within the Ferndale Hydrologic Subarea of the Eel River Hydrologic Unit are as follows.

Table F-4. Basin Plan Beneficial Uses

	Receiving Water Name Discharge Points	
Beneficial Use (s)	Francis Creek / Salt River 001	Groundwater 002
Municipal and Domestic Water Supply (MUN)	E	E
Agricultural Supply (AGR)	E	E
Industrial Service Supply (IND)	E	E
Industrial Process Supply (PRO)	P	P
Groundwater Recharge (GWR)	E	
Freshwater Replenishment (FRESH)	E	
Navigation (NAV)	E	
Hydropower Generation (POW)	P	
Water Contact Recreation (REC-1)	E	
Non-contact Water Recreation (REC-2)	E	
Commercial and Sport fishing (COMM)	E	
Cold Freshwater Habitat (COLD)	E	
Wildlife Habitat (WILD)	E	
Preservation of Rare, Threatened or Endangered Species (RARE)	E	
Marine Habitat (MAR)	P	
Migration of Aquatic Organisms (MIGR)	E	
Spawning, Reproduction, and/or Early Development (SPWN)	E	
Shellfish Harvesting (SHELL)	E	
Estuarine habitat (EST)	E	
Aquaculture (AQUA)	P	P
Native American Culture (CUL)	E	E
Subsistence Fishing (FISH)	E	

In addition to the beneficial uses set out in the Basin Plan, there are several implementation plans that include actions intended to meet water quality objectives and protect beneficial uses of the North Coast Basin. For the Eel River and its tributaries, no point source waste discharges are allowed during the period of May 15 through September 30 and for all other periods the receiving stream's flow must be at least 100 times greater than the waste flow.

The Basin Plan also contains a narrative water quality objective for toxicity that states:
All waters shall be maintained free of toxic substances in concentrations that are toxic to, or that produce detrimental physiological responses in human, plant, animal, or aquatic life. Compliance with this objective will be determined

by use of indicator organisms, analyses of species diversity, population density, growth anomalies, bioassay of appropriate duration or other appropriate methods as specified by the Regional Water Board.

The survival of aquatic life in surface waters subjected to a waste discharge, or other controllable water quality factors, shall not be less than that for the same water body in areas unaffected by the waste discharge, or when necessary for other control water that is consistent with the requirements for 'experimental water' as described in *Standard Methods for the Examination of Water and Wastewater* 18th Edition (1992). At a minimum, compliance with this objective as stated in the previous sentence shall be evaluated with a 96-hour bioassay.

In addition, effluent limits based upon acute bioassays of effluent will be prescribed. Where appropriate, additional numerical receiving water objectives for specific toxicants will be established as sufficient data becomes available, and source control of toxic substances will be required.

Requirements of this Order implement the Basin Plan.

The State Water Board adopted the *Water Quality Control Plan for Control of Temperature in the Coastal and Interstate Water and Enclosed Bays and Estuaries of California* (Thermal Plan) on May 18, 1972, and amended this plan on September 18, 1975. This plan contains temperature objectives for coastal and interstate waters and enclosed bays and estuaries of the State. Requirements of this Order implement the Thermal Plan to the extent that it is applicable to receiving waters for this Discharger.

2. **National Toxics Rule (NTR) and California Toxics Rule (CTR).** USEPA adopted the NTR on December 22, 1992, and later amended it on May 4, 1995 and November 9, 1999. About forty criteria in the NTR applied in California. On May 18, 2000, USEPA adopted the CTR. The CTR promulgated new toxics criteria for California and, in addition, incorporated the previously adopted NTR criteria that were applicable in the state. The CTR was amended on February 13, 2001. These rules contain water quality criteria for priority pollutants and are applicable to this discharge.

3. **State Implementation Policy.** On March 2, 2000, the State Water Board adopted the *Policy for Implementation of Toxics Standards for Inland Surface Waters, Enclosed Bays, and Estuaries of California* (State Implementation Policy or SIP). The SIP became effective on April 28, 2000 with respect to the priority pollutant criteria promulgated for California by the USEPA through the NTR and to the priority pollutant objectives established by the Regional Water Board in the Basin Plan. The SIP became effective on May 18, 2000 with respect to the priority pollutant criteria promulgated by the USEPA through the CTR. The State Water Board adopted amendments to the SIP on February 24,

2005 that became effective on July 13, 2005. The SIP establishes implementation provisions for priority pollutant criteria and objectives and provisions for chronic toxicity control. Requirements of this Order implement the SIP.

4. **Alaska Rule.** On March 30, 2000, USEPA revised its regulation that specifies when new and revised state and tribal water quality standards (WQS) become effective for CWA purposes (40 C.F.R. § 131.21, 65 Fed. Reg. 24641 (April 27, 2000)). Under the revised regulation (also known as the Alaska Rule), new and revised standards submitted to USEPA after May 30, 2000, must be approved by USEPA before being used for CWA purposes. The final rule also provides that standards already in effect and submitted to USEPA by May 30, 2000, may be used for CWA purposes, whether or not approved by USEPA.

5. **Antidegradation Policy.** Section 131.12 requires that the state water quality standards include an antidegradation policy consistent with the federal policy. The State Water Board established California's antidegradation policy in State Water Board Resolution No. 68-16. Resolution No. 68-16 incorporates the federal antidegradation policy where the federal policy applies under federal law. Resolution No. 68-16 requires that existing water quality be maintained unless degradation is justified based on specific findings. The Regional Water Board's Basin Plan implements, and incorporates by reference, both the State and federal antidegradation policies. The permitted discharge must be consistent with the antidegradation provision of section 131.12 and State Water Board Resolution No. 68-16. Section IV.D.2 of this Fact Sheet discusses how the requirements of this Order satisfy the Antidegradation Policy.

6. **Anti-Backsliding Requirements.** Sections 402(o)(2) and 303(d)(4) of the CWA and federal regulations at title 40, Code of Federal Regulations[7] section 122.44(l) prohibit backsliding in NPDES permits. These anti-backsliding provisions require that effluent limitations in a reissued permit must be as stringent as those in the previous permit, with some exceptions in which limitations may be relaxed. Section IV.D.1 of this Fact Sheet provides a detailed discussion of how the requirements of this Order satisfy anti-backsliding requirements.

D. Impaired Water Bodies on CWA 303(d) List

Section 303(d) of the federal CWA requires states to identify waterbodies that do not meet water quality standards and are not supporting their beneficial uses after implementation of technology-based effluent limitations on point sources. Each state must submit an updated list, the 303(d) List of Impaired Waterbodies, to USEPA by April of each even numbered year. In addition to identifying the

[7] All further statutory references are to title 40 of the Code of Federal Regulations unless otherwise indicated.

waterbodies that are not supporting beneficial uses, the 303(d) list also identifies the pollutant or stressor causing impairment and establishes a schedule for developing a control plan to address the impairment. The USEPA requires the Regional Water Board to develop total maximum daily loads (TMDLs) for each 303(d) listed pollutant and water body contaminant. TMDLs establish the maximum quantity of a given pollutant that can be added to a water body from all sources without exceeding the applicable water quality standard for that pollutant and determine wasteload allocations (the portion of a TMDL allocated to existing and future point sources) for point sources and load allocations (the portion of a TMDL attributed to existing and future nonpoint sources) for nonpoint sources.

In June 2007, the USEPA provided final approval of the 303(d) list of impaired water bodies prepared by the State. The list identifies the Eel River Delta within the Lower Eel Hydrologic Area as impaired by sedimentation/siltation and temperature. On December 18, 2007, USEPA approved a TMDL addressing sediment and temperature in the Lower Eel River and its tributaries. Regarding temperature, the TMDL concludes that most sources of heat in the Lower Eel River watershed are from diffuse, nonpoint sources and result from such factors as removal of stream shade, longer stream flow travel time, changes in timing and volume of natural stream flow due to water diversions and impoundments, and increased sediment loads that cause widening of streams. As the critical time period for temperature is in the summer, the TMDL was established for that critical time period, which is also the time period when point source discharges from area wastewater treatment facilities are prohibited. The TMDL concludes that, because of the summer discharge prohibition, area wastewater treatment facilities, such as Ferndale's wastewater treatment plant, do not contribute to temperature loadings to the Lower Eel River Watershed, and therefore, the TMDL establishes a "zero" wasteload allocation for all current and future wastewater treatment facilities that discharge to the Lower Eel River Watershed. The Regional Water Board interprets this wasteload allocation to mean that, as long as the City of Ferndale adheres to the summer discharge prohibition, it will be in compliance with the approved TMDL for temperature.

Regarding sediment, the TMDL establishes a maximum loading of 125 percent of the natural sediment loading for the watershed and further defines that loading rate as 2.5 tons of sediment per square mile of watershed per day on a long term basis. Although nonpoint sources were found to be primarily responsible for excessive sediment loadings to the Lower Eel River, the TMDL establishes wasteload allocations for area wastewater treatment facilities at levels corresponding to existing permit limitations for suspended and settleable solids. To satisfy the requirements of the TMDL, this Order therefore retains the monthly average limitations for settleable solids from Order No. R1-2008-0038 of 0.1 mLs/L-hr, and suspended solids at 30 mg/L.

E. Other Plans, Polices and Regulations

1. **Stormwater**. The Order requires the Discharger to seek authorization to discharge under and meet the requirements of the State Water Board's Water Quality Order 97-03-DWQ, NPDES General Permit No. CAS000001, *Waste Discharge Requirements for Discharges of Storm Water Associated with Industrial Activities Excluding Construction Activities*, if applicable. Pursuant to title 40, section 403, coverage under the general permit is not required for wastewater treatment facilities that treat domestic sewage, with a design flow of less than 1.0 mgd. Ferndale's current design flow is 0.576 mgd.

2. **Sanitary Sewer Systems**. On May 2, 2006, the State Water Board adopted State Water Board Order No. 2006-0003-DWQ, *Statewide General WDRs for Sanitary Sewer Systems*. The general permit is applicable to all "federal and state agencies, municipalities, counties, districts, and other public entities that own or operate sanitary sewer systems greater than one mile in length that collect and/or convey untreated or partially treated wastewater to a publicly owned treatment facility in the State of California." The purpose of the general permit is to promote the proper and efficient management, operation, and maintenance of sanitary sewer systems and to minimize the occurrences and impacts of sanitary sewer overflows. Section VI. C. 5. a of the Order requires the Discharger to seek coverage under Order No. 2006-0003-DWQ, if applicable, and restates some provisions of the general permit.

3. **Discharge of Biosolids to Land**. On July 22, 2004, the State Water Board adopted State Water Board Order No. 2004-0012-DWQ, *General Waste Discharge Requirements for the Discharge of Biosolids to Land for Use as a Soil Amendment in Agricultural, Silvicultural, Horticultural, and Land Reclamation Activities*. The general waste discharge requirements establish standards for agronomic applications and the use of biosolids as a soil amendment or fertilizer in agriculture, forestry, and surface mining reclamation, and include provisions to mitigate significant environmental impacts. That Order requires the Discharger to obtain coverage under Order No. 2004-0012-DWQ, by December 30, 2007, for the discharge of biosolids from the wastewater treatment plant. Section VI. C. 5. f of the Order requires the Discharger to seek coverage under Order No. 2004-0012-DWQ, if applicable, and restates some provisions of the general permit.

IV. RATIONALE FOR EFFLUENT LIMITATIONS AND DISCHARGE SPECIFICATIONS

The CWA requires point source dischargers to control the amount of conventional, non-conventional, and toxic pollutants that are discharged into the waters of the United States. The control of pollutants discharged is established through effluent limitations and other requirements in NPDES permits. There are two principal bases for effluent limitations in the Code of Federal Regulations: Section 122.44(a) requires that permits include applicable technology-based limitations and standards;

and section 122.44(d) requires that permits include water quality-based effluent limitations (WQBELs) to attain and maintain applicable numeric and narrative water quality criteria to protect the beneficial uses of the receiving water. Where the discharge has the reasonable potential to cause or contribute to an excursion above a narrative criterion, but numeric water quality objectives have not been established, WQBELs may be established using one or more of three methods described at title 40, section 122.44 (d) (vi). First, WQBELs may be established using a calculated water quality criterion, such as a proposed State criterion or an explicit State policy or regulation interpreting its narrative criterion. Second, WQBELs may be established on a case-by-case basis using USEPA criteria guidance published under CWA section 304(a). Third, WQBELs may be established using an indicator parameter for the pollutant of concern.

A. Discharge Prohibitions

1. **Prohibition III. A.** The discharge of any waste not disclosed by the Discharger or not within the reasonable contemplation of the Regional Water Board is prohibited.

   This prohibition is based on the Basin Plan, the previous Order (Order No. R1-2008-0038), and State Water Board Order WQO 2002-0012 regarding the petition of WDRs Order No. 01-072 for the East Bay Municipal Utility District and Bay Area Clean Water Agencies. In State Water Board Order WQO 2002-0012, the State Water Board found that this prohibition is acceptable in Orders, but should be interpreted to apply only to constituents that are either not disclosed by the Discharger or are not reasonably anticipated to be present in the discharge, but have not been disclosed by the Discharger. It specifically does not apply to constituents in the discharge that do not have “reasonable potential” to exceed water quality objectives.

   The State Water Board has stated that the only pollutants not covered by this prohibition are those which were “disclosed …and...can be reasonably contemplated.” (In re the Petition of East Bay Municipal Utilities District et al., (State Water Board 2002) Order No. WQ 2002-0012, p. 24) In that Order the State Water Board cited a case which held the Discharger is liable for discharge of pollutants not “within the reasonable contemplation of the permitting authority”..., (Piney Run Preservation Assn. v. County Commissioners of Carroll County, Maryland (4th Cir. 2001) 368 F .3d 255, 268.) Thus, State Water Board authority provides that, to be permissible, the constituent discharged (1) must have been disclosed by the Discharger and (2) can be reasonably contemplated by the Regional Water Board.

   Whether or not the Discharger reasonably contemplates the discharge of a constituent is not relevant. What matters is whether the Discharger disclosed the constituent to the Regional Water Board or whether the presence of the

pollutant in the discharge can otherwise be reasonably contemplated by the Regional Water Board at the time of Order adoption.

2. **Prohibition III.B.** Creation of pollution, contamination, or nuisance, as defined by section 13050 of the Water Code, is prohibited.

   This prohibition is based on section 13050 of the Water Code. It has been retained from Order No. R1-2008-0038.

3. **Prohibition III.C.** The discharge of sludge or digester supernatant is prohibited, except as authorized under section VI.C.5.c. (Solids Disposal and Handling requirements).
   This prohibition is based on restrictions on the disposal of sewage sludge found in federal regulations (title 40, section 503 (Biosolids), section 527, and section 258) and title 27 Cal. Code of Regs. It has been retained from Order No. R1-2008-0038.

4. **Prohibition III.D.** The discharge of untreated or partially treated waste from anywhere within the collection, treatment, or disposal facility is prohibited, except as provided for in Prohibition III. E and Attachment D, Standard Provision I.G (Bypass).

   This Prohibition has been retained from Order No. R1-2008-0038 and is based on the Basin Plan to protect beneficial uses of the receiving water from unpermitted discharges, and the intent of Water Code sections 13260 through 13264 relating to the discharge of waste to waters of the State without filing for and being issued an Order. This prohibition applies to spills not related to sanitary sewer overflows (SSOs) and other unauthorized discharges of wastewater within the collection, treatment, and disposal facilities. The discharge of untreated or partially treated wastewater from the collection, treatment, or disposal facility represents an unauthorized bypass pursuant to title 40, section 122.41(m) or an unauthorized discharge which poses a threat to human health and/or aquatic life, and therefore, is explicitly prohibited by this Order.

5. **Prohibition III.E.** Any sanitary sewer overflow (SSO) that results in a discharge of untreated or partially treated wastewater to (a) waters of the United States, (b) groundwater, or (c) land that creates a pollution, contamination, or nuisance as defined in Water Code section 13050(m) is prohibited.

   This prohibition applies to spills related to SSOs and is based on State standards, including section 13050 of the Water Code and the Basin Plan. This prohibition is consistent with the States' antidegradation policy as specified in State Water Board Resolution No. 68-16 (Statement of Policy with Respect to Maintaining High Quality of Waters in California) in that the prohibition imposes

conditions to prevent impacts to water quality, does not allow the degradation of water quality, will not unreasonably affect beneficial uses of water, and will not result in water quality less that that prescribed in State Water Board or Regional Water Board plans and policies.

This prohibition is stricter than the prohibitions stated in State Water Board Order 2006-0003-DWQ, *Statewide General Waste Discharge Requirements for Sanitary Sewer Systems*. Order 2006-0003-DWQ prohibits SSOs that result in the discharge of untreated or partially treated wastewater to waters of the United States and SSOs that create a nuisance. Prohibition III.E. of this Order further prohibits any SSO that results in the discharge of untreated or partially treated wastewater to groundwater due to the prevalence of high groundwater in this Region and this Region's reliance on groundwater as a drinking water source.

6. **Prohibition III.F.** The discharge of waste to land that is not owned by or subject to an agreement for use by the Discharger is prohibited.

   This prohibition is retained from Order No. R1-2008-0038. Land used for the application of wastewater must be owned by the Discharger or be under control of the Discharger by contract so that the Discharger maintains a means for ultimate disposal of treated wastewater.

7. **Prohibition III.G.** The discharge of waste at any point except Discharge Point 001 or to neighboring agricultural lands, or as authorized by another State Water Board or Regional Water Board Order, is prohibited.

   This prohibition is a general prohibition that allows the Discharger to discharge waste only in accordance with WDRs. It is based on sections 301 and 402 of the federal CWA and section 13263 of the Water Code.

8. **Prohibition III.H.** The discharge of treated wastewater from the wastewater treatment facility to the Eel River or its tributaries is prohibited during the period May 15 through September 30 of each year.

   This prohibition is required by the Basin Plan. The Basin Plan prohibits discharges to the Eel River and its tributaries during the period May 15 through September 30 (Chapter 4, Waste Discharge prohibitions for the North Coastal Basin)

B. Technology-Based Effluent Limitations

1. Scope and Authority

Section 301(b) of the CWA and implementing USEPA permit regulations at section 122.44, title 40 of the Code of Federal Regulations, require that permits include conditions meeting applicable technology-based requirements at a minimum, and any more stringent effluent limitations necessary to meet applicable water quality standards. The discharge authorized by this Order must meet minimum federal technology-based requirements based for Secondary Treatment Standards at Part 133.

Regulations promulgated in section 125.3(a)(1) require technology-based effluent limitations for municipal Dischargers to be placed in NPDES permits based on Secondary Treatment Standards.

The Federal Water Pollution Control Act Amendments of 1972 (PL 92-500) established the minimum performance requirements for POTWs [defined in section 304(d)(1)]. Section 301(b)(1)(B) of that Act requires that such treatment works must, at a minimum, meet effluent limitations based on secondary treatment as defined by the USEPA Administrator.
Based on this statutory requirement, at title 40, section 133.102, USEPA established the minimum level of effluent quality attainable by secondary treatment in terms of BOD_5, TSS, and pH, and requires that all POTWs achieve those levels of effluent quality. Alternative requirements, described as "treatment equivalent to secondary" standards may be established by a permitting authority in certain circumstances, described at section 133.101, when:

a. BOD_5 and TSS effluent concentrations achievable through proper operation and maintenance of a treatment works exceed the levels established at section 133.102,

b. A trickling filter or waste stabilization pond is used as the principal process, and

c. The treatment works provides significant biological treatment of municipal wastewater.

For waste stabilization ponds, "treatment equivalent to secondary" standards are summarized below.

a. BOD and Suspended Solids

(1) The 30-day average shall not exceed 45 mg/L

(2) The 7-day average shall not exceed 65 mg/L

(3) The 30-day average percent removal shall not be less than 65%

b. pH

(1) The pH shall be maintained within the limits of 6.0 to 9.0. (The effluent limitation range for pH of 6.5 to 8.5 required to meet the water quality objective for hydrogen ion concentration (pH) is contained in the Basin Plan Table 3-1.)

In addition, section 122.45 (f) requires the establishment of mass-based effluent limitations for all pollutants limited in Orders, except, 1) for pH, temperature, radiation, or other pollutants which cannot appropriately be expressed by mass, or (2) when applicable standards and limitations are expressed in terms of other units of measure, or (3) where the permit limitation is established on a case-by-case basis under section 125.3, and the limitations expressed in terms of mass are infeasible because the mass of the pollutant discharged cannot be related to a measure of operation, and permit conditions ensure that dilution will not be used as a substitute for treatment. Pollutants limited in terms of mass additionally may be limited in terms of other units of measurement, and the permit shall require that permittee to comply with both limitations. Mass based limitations are based on the facility design flow.

Technology-based effluent limitations may be set on a case-by-case basis under section 402(a)(1) of the CWA to the extent that EPA-promulgated effluent limitations are inapplicable based upon the available information and unique factors related to the applicant. A combination of EPA- promulgated effluent limitations and effluent limits developed under a case-by-case basis scenario may be applied to carry out provisions of the CWA.

Alternative requirements, described as “Best Practicable Control Technology” (BPT) requirements may be established by a permitting authority on a case-by-case basis considering the appropriate factors listed at title 40, section 125.3 (d)(1). Factors to be considered for BPT requirements include:

a. The total cost of application of technology in relation to the effluent reduction benefits to be achieved from such application;

b. The age of equipment and facilities involved;

c. The process employed;

d. The engineering aspects of the application of various types of control techniques; process changes;

e. Process changes; and

f. Non-water quality environmental impact (including energy requirements)

2. Applicable Technology-Based Effluent Limitations

a. Existing WWTF

The City of Ferndale currently uses a waste stabilization pond as the principal process providing significant biological treatment of municipal wastewater. In accordance with title 40, section 133.101, a facility that consists of a pond or a trickling filter system and cannot meet the secondary standards after proper operation and maintenance may be allowed to meet treatment equivalent to secondary limits. An analysis was done with the data from January 2006 through December 2007 to determine the 95th percentile value for the 30-day averages of BOD and TSS. The 95th percentile of 30-day averages for the 2-year period are BOD 24 mg/L and TSS 44 mg/L.

The City of Ferndale effluent concentrations for TSS that are consistently achievable, based on the 95th percentile value, exceed the minimum level for secondary treatment effluent. Therefore, the Discharger is eligible for alternative limits for treatment equivalent to secondary. Because the alternative state requirement for TSS concentration by wastewater treatment ponds in California provides for a 30-day TSS effluent limitation up to 95 mg/L, the 95th percentile effluent value of 44 mg/L is established in this permit as the average monthly final TSS effluent limitation.

An average weekly effluent limitation for TSS has also been established in the Order as required by title 40, section 122.45(d)(2), which states that effluent limitations for POTWs must be expressed as average weekly and average monthly limitations unless impracticable. In accordance with title 40, section 133.101, the average weekly limitation was calculated by multiplying the average monthly limitation of 44 mg/L by 1.5 to obtain a result of 66 mg/L.

This Order establishes the following technology based effluent limitations, applicable to the existing WWTF for Discharge Point 001.

Table F-5. Technology-Based Effluent Limitations Existing WWTF- Discharge Point 001

Parameter	Units	Existing WWTF Effluent Limitations	
		Average Monthly	Average Weekly
BOD_5	mg/L	30	45
	lbs/day	144	216
TSS	mg/L	44	66
	lbs/day	211	317
Percent Removal[8]	%	65	---
pH	s.u.	6.0 – 9.0[9]	

(i) Biochemical Oxygen Demand and Suspended Solids

Concentration-based limitations for BOD_5 and TSS reflect "treatment equivalent to secondary" and are retained from the previous Order. The mass emission limitations are based on the facility's current design treatment capacity of 0.576 mgd.

The 30-day average percent removal requirement established by this Order for the existing oxidation pond WWTF is 65 percent as required by the "treatment equivalent to secondary" technology-based effluent limitations derived from federal requirements title 40, section 133.105.

b. New WWTF

The City of Ferndale's treated effluent is discharges into Francis Creek near its confluence with the Salt River during the winter discharge period of October 1 to May 14. Historically, the Salt River was wide and deep enough to be used as a shipping channel. Over time, the Salt River has experienced significant reductions in channel capacity from sediment deposition and prolific growth of in-stream vegetation. As a result, the volume of effluent discharged from the Ferndale WWTF consistently exceeds one percent of the receiving water flow in violation of permit and Basin Plan requirements. The City of Ferndale has been under a Cease and Desist Order to comply with Basin Plan discharge rate requirements since May 2003. The Discharger proposes construction of a new WWTF utilizing a combination of extended aeration and disc filtration to comply with the criteria for an exception from the rate limitations set forth in Prohibition 3

[8] Percent removal is determined for both BOD and TSS through comparison of the monthly average concentrations measured at M-INF and EFF-001

[9] The final effluent limitation for pH is established between 6.5 and 8.5 based upon the more stringent water quality based criteria.

of the Basin Plan, which are discussed in detail under section IV.C.1. of this Fact Sheet.

In accordance with section 125.3(c) a combination of EPA-promulgated and case-by-case technology based effluent limitations has been established for the new WWTF. In setting case-by-case limitations pursuant to section 125.3 and based on BPT, the Regional Water Board considered the factors set forth in section 125.3(d). This information was provided by the Discharger as part of the application for NPDES permit renewal, which included a request for an exception to the Water Quality Control Plan for the North Coast Region Discharge Rate Limitation (Exception Request). The Exception Request, which demonstrated the capabilities of the new WWTF, explains that the new WWTF will be capable of consistently treating wastewater to tertiary level quality through the operation of extended aeration tanks, clarifiers, and disc filters. Tertiary level treatment is defined under these circumstances as the ability to achieve 10 mg/l as a monthly average for BOD and TSS respectively.

An average weekly effluent limitation for BOD and TSS has also been established in the Order as required by title 40, section 122.45(d)(2), which states that effluent limitations for POTWs must be expressed as average weekly and average monthly limitations unless impracticable. In accordance with title 40, section 133.101, the average weekly limitation was calculated by multiplying the average monthly limitation of 10 mg/L by 1.5 to obtain a result of 15 mg/L.

This Order establishes the following technology based effluent limitations, applicable to the new WWTF for Discharge Point 001.

Table F-6. Technology-Based Effluent Limitations New WWTF- Discharge Point 001

Parameter	Units	New WWTF Effluent Limitations	
		Average Monthly	Average Weekly
BOD_5	mg/L	10	15
	lbs/day	79	119
TSS	mg/L	10	15
	lbs/day	79	119
Percent Removal[10]l	%	85	---
pH	s.u.	6.0 – 9.0[11]	

[10] Percent removal is determined for both BOD and TSS through comparison of the monthly average concentrations measured at M-INF and EFF-001

[11] The final effluent limitation for pH is established between 6.5 and 8.5 based upon the more stringent water quality based criteria.

(i) Biochemical Oxygen Demand and Suspended Solids

Concentration-based limitations for BOD_5 and TSS reflect tertiary treatment and are more restrictive then limitations for the existing WWTF. The mass emission limitations are based on the facility's new average wet weather design capacity of 0.95 mgd.

The 30-day average percent removal requirement established by this Order for the new extended aeration WWTF is 85 percent as required by the technology-based effluent limitations derived from the minimum technology-based federal requirements for equivalent to secondary treatment set forth in section 133.105.

C. Water Quality-Based Effluent Limitations (WQBELs)

1. Scope and Authority

Section 301(b) of the CWA and NPDES regulations at title 40, section 122.44(d) require that permits include limitations more stringent than applicable federal technology-based requirements where necessary to achieve applicable water quality standards, including numeric and narrative objectives within a standard.

Section 122.44(d)(1)(i) mandates that permits include effluent limitations for all pollutants that are or may be discharged at levels that have the reasonable potential to cause or contribute to an exceedence of a water quality standard, including numeric and narrative objectives within a standard. A reasonable potential analysis (RPA) demonstrated reasonable potential for discharges from the Ferndale wastewater treatment facility to cause or contribute to exceedences of applicable water quality criteria for copper; lead; mercury; nickel; zinc; 2,3,7,8-TCDD; chlorodibromomethane; dichlorobromomethane; bis(2-ethylhexyl)phthalate; alpha-BHC; and heptachlor epoxide.

Where reasonable potential has been established for a pollutant, but there is no numeric criterion or objective for the pollutant, WQBELs must be established in accordance with the requirements of title 40, section 122.44(d)(1) (vi), using: 1) USEPA criteria guidance under CWA section 304(a), supplemented where necessary by other relevant information; 2) an indicator parameter for the pollutant of concern; or 3) a calculated numeric water quality criterion, such as a proposed state criterion or policy interpreting the state's narrative criterion, supplemented with other relevant information.

The process for determining "reasonable potential" and calculating WQBELs, when necessary, is intended to protect the designated beneficial uses of

receiving waters as specified in the Basin Plan, and achieve applicable water quality objectives and criteria that are contained in the Basin Plan and in other applicable State and federal rules, plans, and policies, including applicable water quality criteria from the CTR and the NTR.

Section 4, of the Basin Plan limits discharges to the Eel River and its tributaries to releases not exceeding one percent (100:1) of the receiving stream's flow during the allowable discharge season. As described under section IV.B.2.b. of this Fact Sheet, the City of Ferndale has been under Cease and Desist Order to comply with Basin Plan discharge rate requirements since May 2003.

The Basin Plan indicates that the Regional Water Board will consider for cause exceptions to the waste discharge rate limitations and requires that exceptions be defined in NPDES permits for each discharger, on a case by case basis. The Discharger has applied for an exception to the waste discharge rate limitation. The Discharger has demonstrated consistency with Basin Plan exception requirements for a discharge rate at one hundred percent of the receiving water flow (1:1) as follows:

(i) *The wastewater treatment facility shall be reliable*.
The Discharger will construct a new WWTF including replacement of the influent pump station, a new expanded headworks facility, retrofit of the existing oxidation pond into an equalization basin, construction of new aeration tanks, clarifiers, disc filters, and ultraviolet disinfection. Ultraviolet disinfection has been shown to be more effective than chlorine in denaturing viruses and provides a higher level of pathogen removal than chlorine disinfection. Extended aeration and filtration and disinfection treatment technologies that will be applied at the new WWTF have been empirically shown to produce reliably high quality effluent of tertiary level quality.

(ii) *Reliability shall be demonstrated through analysis of the features of the facility including, but not limited to, system redundancy, proper operation and maintenance, and backup storage capacity to prevent the threat of pollution or nuisance.*

The new headworks facility will include a primary channel and a second channel for redundancy. Two main pumps within the headworks will pump influent to the treatment works, with a third pump in place for redundancy. Wintertime flows exceeding the peak treatment capacity of 0.95 mgd will be pumped to an 8.0 million gallon equalization basin and retained for later treatment when influent flows subside. The equalization basin may also serve as emergency storage or temporary storage during WWTF upsets or routine maintenance activities respectively.

(iii) *The discharge of waste shall be limited to rates and constituent levels which protect the beneficial uses of the receiving waters.*

In conjunction with the application for NPDES permit renewal, the Discharger submitted an Exception Request. The analysis provided by the Discharger in the Exception Request, and reviewed by the Regional Water Board Staff, demonstrates that the discharge from the WWTF will be limited to concentrations and rates protective of beneficial uses identified under Table F-4 of this Fact sheet.

(iv) *Protection shall be demonstrated through analysis of all the beneficial uses of the receiving waters. For receiving waters which support domestic water supply (MUN) and water contact recreation (REC1), analysis shall include expected normal and extreme weather conditions within the discharge period, including estimates of instantaneous and long-term minimum, average, and maximum discharge flows and percent dilution in receiving waters. The analysis shall evaluate and address cumulative effects of all discharges, including point and nonpoint source contributions, both in existence and reasonably foreseeable. For receiving waters which support domestic water supply (MUN), the Regional Water Board shall consider the California Department of Health Services evaluation of compliance with the Surface Water Filtration and Disinfection Regulations contained in Section 64650 through 64666, Chapter 17, Title 22 of the California Code of Regulations. Demonstration of protection of beneficial uses shall include consultation with the California Department of Fish and Game regarding compliance with the California Endangered Species Act.*

The Exception Request includes an analyses that compares the potential cumulative effects of the discharge of the tertiary treated wastewater that could occur under extreme conditions on the existing receiving water quality, with the existing effluent quality, and models the projected conditions. Constituents that were identified and compared to water quality objectives in the Basin Plan for the protection of beneficial uses include: color, taste and odor, floating materials, biostimulatory substances, nitrogen, phosphorus, phytoplankton chlorophyll-a, sediment, turbidity, total suspended solids, settleable materials, oil and grease, dissolved oxygen, pH, bacteria, temperature, toxicity, pesticides, and chemical constituents.

(v) *The exception shall be limited to that increment of wastewater which remains after reasonable alternatives for reclamation have been addressed.*

The Discharger reclaims all treated wastewater from May 15 through September 30 each year. Additional periods of reclamation occur as weather permits. Because of large amounts of rainfall and high

groundwater table in the North Coast Region, there are limited opportunities for additional reclamation.

(vi) *The exception shall comply with State Water Board Resolution No. 68-16, "Statement of Policy with Respect to Maintaining High Quality Waters in California," and the federal regulations covering antidegradation (40 CFR §131.12).*

The General Findings of the Exception Request indicate:

"Existing condition: The existing WWTF effluent quality and discharge methods have an adverse affect on instream dissolved oxygen levels. The combination of effluent low dissolved oxygen levels and pulse loading from the existing effluent pump system can drive dissolved oxygen levels below the Basin Plan minimum limit of 7 mg/l at the downstream sampling sites. At one site, the effects of the pulse loading on dissolved oxygen can still be seen, but overall dissolved oxygen levels are above the Basin Plan limit of 5 mg/l for marine waters. The existing WWTF effluent quality results in high instream ammonia levels, and elevated phytoplankton chlorophyll-a levels.

New condition: The proposed new WWTF effluent quality and more consistent and uniform discharge rates improve instream dissolved oxygen levels. In general, dissolved oxygen levels at the downstream sampling sites show predicted dissolved oxygen levels above the Basin Plan minimum dissolved oxygen limit of 7 mg/l. Ammonia levels at all three sites have been significantly improved due to the highly nitrified effluent from the new WWTF. Phytoplankton chlorophyll-a levels have also been reduced at all three sites. Following the end of the discharge period modeling results show that any effects or impacts from discharged effluent quickly dissipate for all constituents."

The exception to the discharge limitation will not result in degradation of the receiving water because it will result in improvements over existing conditions in the receiving waters. The exception therefore complies with sate and federal anti-degradation policies.

(vii) *There shall be no discharge of waste during the period May 15 through September 30.*

The Order prohibits discharges to surface water between May 15 and September 30 each year, during which time the Discharger reclaims the treated effluent for agricultural re-use.

In conjunction with the Exception Request, the Discharger identified constituents of concern (COCs) associated with discharges from the new WWTF. Effluent and receiving water analyses coupled with computer modeling demonstrates reasonable potential for discharges from the Ferndale wastewater treatment facility (existing and or new WWTF) to cause or contribute to exceedences of applicable water quality criteria associated with copper; lead; mercury; nickel; zinc; 2,3,7,8-TCDD; chlorodibromomethane; dichlorobromomethane; bis(2-ethylhexyl)phthalate; alpha-BHC; and heptachlor epoxide, pH, chlorine, coliform, ammonia, nitrate, and total nitrogen. WQBELs must, therefore, be developed for these COCs.

2. Applicable Beneficial Uses and Water Quality Criteria and Objectives

a. Beneficial Uses: Beneficial use designations for receiving waters for discharges from the City of Ferndale's wastewater treatment facility are discussed in Finding II. H of the Order and section III. C. 1 of this Fact Sheet.

b. Basin Plan Water Quality Objectives: In addition to the specific water quality objectives indicated above, the Basin Plan contains narrative objectives for color, tastes and odors, floating material, suspended material, settleable material, oil and grease, biostimulatory substances, sediment, turbidity, pH, dissolved oxygen, bacteria, temperature, toxicity, pesticides, chemical constituents, and radioactivity that apply to inland surface waters, enclosed bays, and estuaries, including Francis Creek and the Salt River.

c. State Implementation Plan (SIP), CTR and NTR:. Water quality criteria and objectives applicable to this receiving water are established by the California Toxics Rule (CTR), established by the USEPA at title 40, section 131.38; and the National Toxics Rule (NTR), established by the USEPA at title 40, section 131.36. Criteria for most of the 126 priority pollutants are contained within the CTR and the NTR.

Aquatic life freshwater and saltwater criteria are further identified as criterion maximum concentrations (CMC) and criterion continuous concentrations (CCC). The CTR defines the CMC as the highest concentration of a pollutant to which aquatic life can be exposed for a short period of time without deleterious effects and the CCC as the highest concentration of a pollutant to which aquatic life can be exposed for an extended period of time (4 days) without deleterious effects. The CMC is used to calculate an acute or one-hour average numeric effluent limitation and the CCC is used to calculate a chronic or 4-day average numeric effluent limitation. Aquatic life freshwater criteria were used for the reasonable potential analysis (RPA),

and for the calculation of effluent limitations for pollutants that showed reasonable potential.

Human health criteria are further identified as “water and organisms” and “organisms only.” The criteria from the “water and organisms” column of the CTR were used for the RPA, as the receiving water, Francis Creek / the Salt River, has the beneficial use designation as a municipal and domestic supply.

At title 22, Division 4, Chapter 15, Cal. Code of Regs, the Department of Health Services has established Maximum Contaminant Levels (MCLs) for certain pollutants. Chapter 3 of the Basin Plan establishes these MCLs as water quality objectives applicable to receiving waters with the beneficial use designation of municipal and domestic supply

The SIP, which is described in Finding II. J of the Order and section III. C. 3 of the Fact Sheet, includes procedures for determining the need for and calculating WQBELs and requires dischargers to submit data sufficient to do so. Table F-7 summarizes applicable water quality criteria/objectives for each priority pollutant that has been detected at a measurable concentration in Ferndale’s effluent or in the receiving water during the term of the previous Order. Attachment F-1 is a summary of RPA results for all priority toxic pollutants with water quality criteria/objectives that are applicable to Francis Creek / the Salt River.

Table F-7. Applicable Water Quality Criteria

Constituent	Water Quality Criteria (µg/L)			
	title 22 MCLs [1]	CTR/NTR Aquatic Life		CTR/NTR Human Health
		Acute	Chronic	
Antimony	6.0	---	---	14
Arsenic	50	340	150	---
Beryllium	4.0	---	---	---
Cadmium	5.0	2.3 [1]	1.5 [1]	---
Chromium^{+3}	---	1064 [1]	127 [1]	---
Chromium^{+6}	50	16	11	---
Copper	---	8.0 [1]	5.6 [1]	1300
Lead	---	38 [1]	1.5 [1]	---
Mercury	2.0	---	---	0.05
Nickel	100	283 [1]	32 [1]	610
Selenium	50	---	5.0	---
Silver	---	1.5 [1]	---	---
Thallium	2.0	---	---	1.7
Zinc	---	72 [1]	72 [1]	---

Constituent	Water Quality Criteria (µg/L)			
	title 22 MCLs [1]	CTR/NTR Aquatic Life		CTR/NTR Human Health
		Acute	Chronic	
Cyanide	150	22	5.2	700
2,3,7,8-TCDD	0.00000003	---	---	0.000000013
Chlorodibromomethane	---	---	---	0.401
Chloroform	---	---	---	---
Dichlorobromomethane	---	---	---	0.56
1,1,2,2-Tetrachloroethane	1.0	---	---	0.17
Toluene	150	---	---	6800
Bis(2-Ethylhexyl)Phthalate	---	---	---	1.8
1,4-Dichlorobenzene	5.0	---	---	400
alpha-BHC	---	---	---	0.0039
delta-BHC	---	---	---	---
Heptachlor Epoxide	0.01	0.52	0.0038	0.0001

[1] Aquatic life criteria for this metal are hardness dependent (in general, as hardness decreases, metal toxicity increases). For this metal, a hardness of 55 mg/L $CaCO_3$, the lowest hardness measured in the receiving water, was used to determine "reasonable potential." If an effluent limitation was required based on a finding of "reasonable potential," for this metal, the Order requires a determination of limitations based on actual receiving water hardness measured at the time of compliance determination.

3. Determining the Need for WQBELs

a. Non-Priority Pollutants

(1) pH. The Order retains an effluent limitation for pH of 6.5 to 8.5 from the previous permit. This limitation is based on the water quality objective for all surface waters of the North Coast Region established by the Basin Plan (Chapter 3). This effluent limitation will be in effect for both the current and new WWTF.

(2) Total Coliform Bacteria. Coliform bacteria are a pollutant of concern in all wastewaters of domestic origin, and therefore, the Order retains the effluent limitations for total coliform bacteria from the previous permit. These effluent limitations will ensure that water quality objectives for bacteria, as established by Chapter 3 of the Basin Plan, will be maintained. The specific limitations are based on requirements established by the Department of Health Services at

title 22, Cal. Code of Regs, Division 4, Chapter 3 (Water Recycling Criteria, and are those levels of bacteria required for the reclamation use of treated wastewater for surface irrigation of (i) pasture used for animals producing milk for human consumption and (ii) any nonedible vegetation where access is controlled. This effluent limitation will be in effect for both the current and new WWTF.

(3) Settleable Solids. Effluent limitations for settleable solids are retained from the previous Order and reflect levels of treatment attainable by secondary treatment facilities. This limitation is based on the water quality objective prohibiting bottom deposits for all surface waters of the North Coast Region established by the Basin Plan. This effluent limitation will be in effect for both the current and new WWTF.

(4) Chlorine Residual. The Basin Plan establishes a narrative water quality objective for toxicity, stating that "[a]ll waters shall be maintained free of toxic substances in concentrations that are toxic to, or that produce detrimental physiological responses in human, plant, animal, or aquatic life." The Regional Water Board considers any chlorinated discharge as having the reasonable potential to cause or contribute to exceedences of this water quality objective for toxicity, and therefore, the Order establishes effluent limitations for chlorine. USEPA has established the following criteria for chlorine-produced oxidants for protection of fresh water aquatic life. [*Quality Criteria for Water 1986* (The Gold Book, 1986, EPA 440/5/-86-001)]

Chronic Criterion	Acute Criterion
0.011 mg/L	0.019 mg/L

The water quality criteria recommended by USEPA have been translated to average monthly and maximum daily effluent limitations for total chlorine residual in this Order. The effluent limitations established in this Order are retained from the previous Order which required no detectable level of chlorine in effluent at the point of discharge. This effluent limitation will be in effect until chlorination is no longer used as a disinfection practice at the Ferndale WWTF.

(5) Until the new WWTF is online, during the period of October 1 through May 14, discharges of wastewater shall not exceed one percent (100:1) of the flows of Francis Creek / the Salt River. This effluent limitation is consistent with a prohibition retained from Order No. R1-2008-0038 and is a restatement of a Waste Discharge Prohibition established in Chapter 4 of the Basin Plan for the North Coastal Basin.

Once the new WWTF is online discharges of wastewater to Francis Creek/the Salt River during the period of October 1 through May 14, shall not exceed one hundred percent (1:1) of the receiving water flow. The Discharger has submitted an exception request consistent with criteria required in Chapter 4 of the Basin Plan for the North Coastal Basin. The newly established effluent limitation is consistent with exception criteria applicable to the Basin Pan prohibition and is intended to protect water quality and beneficial uses during critical low flow periods of the year.

(6) Nitrogen Compounds. Untreated domestic wastewater contains ammonia nitrogen. Nitrification is a biological process that converts ammonia to nitrite and nitrate. Denitrification is a process that converts nitrate to nitrogen gas, which is then released to the atmosphere. Inadequate or incomplete nitrification may result in the discharge of ammonia to the receiving stream and inadequate or incomplete denitrification may result in the discharge of nitrate to the receiving stream. The new WWTF will be designed to use nitrification to remove ammonia from the waste stream and denitrification to remove nitrate from the waste stream, culminating in an overall reduction of total nitrogen.

i. Total Nitrogen. The Basin Plan contains a narrative water quality objective for biostimulatory substances that states "[w]aters shall not contain biostimulatory substances in concentrations that promote aquatic growths to the extent that such growths cause nuisance or adversely affect beneficial uses." The Regional Water Board is increasingly concerned about the biostimulatory properties of discharges to surface waters in the North Coast Region. The Exception Request submitted by the Discharger evaluated the potential for biostimulatory effects specific to Francis Creek and the Salt River from nutrients, such as phosphorus and nitrogen containing compounds, common to treated wastewaters. Stimulation of biological growth can diurnally deplete dissolved oxygen in receiving water below Basin Plan criteria. Results from site specific monitoring and modeling indicate that nitrogen is the potential limiting nutrient for biostimulatory activity in Francis Creek and the Salt River. Based upon the available information, a total nitrogen concentration in the effluent of 10 mg/L has been shown by modeling to limit biostimulation to an extent which maintains receiving water dissolved oxygen concentrations to concentrations ranging within Basin Plan criteria most of the time. The Order establishes an effluent limitation for the new WWTF for total nitrogen at 10 mg/L

in order to support the Exception Request. Confirmation of modeling assumptions and associated effluent limitations will be evaluated based upon ongoing monitoring of actual conditions over time once the new WWTF is online.

ii. Nitrate. Nitrate is known to cause adverse health effects in humans. For waters designated as domestic or municipal supply, the Basin Plan (Chapter 3) adopts the Maximum Contaminant Levels (MCLs), established by the Department of Public Health for the protection of public water supplies at Title 22 of the California Code of Regulations, sections 64431 (Inorganic Chemicals) and 64444 (Organic Chemicals), as applicable water quality criteria. The MCL for nitrate (10 mg/L N) is therefore applicable as a water quality criterion. In order to support the Exception Request this Order establishes effluent limitations for nitrate for the protection of human health as well as prevention of biostimulatory effects which could result in diurnal swings of dissolved oxygen concentrations in the receiving water below Basin Plan criteria as described above. This effluent limitation will take effect once the new WWTF is online.

iii. Ammonia. Ammonia is known to cause toxicity to aquatic organisms in surface waters. The Basin Plan establishes a narrative water quality objective for toxicity, stating that "[a]ll waters shall be maintained free of toxic substances in concentrations that are toxic to, or that produce detrimental physiological responses in human, plant, animal, or aquatic life." Due to concerns regarding ammonia toxicity, the Regional Water Board relies on USEPA's recommended water quality criteria for ammonia in fresh water from the 1999 Update of Ambient Water Quality Criteria for Ammonia, EPA-822-R-99-014 (1999) to interpret the Basin Plan's narrative objective for toxicity. USEPA has recommended acute and chronic water quality criteria for the protection of aquatic life, which are dependent on receiving water pH, and the presence/absence of salmonids (acute criteria), and pH, temperature, and the presence/absence of early life stages of fish (chronic criteria). Applying the USEPA acute and chronic ammonia toxicity criteria for periods where salmonids are present the acute ammonia concentration in extreme temperature (18°C) and pH (8.5) conditions would be calculated at 2.14 mg/L and 0.87 mg/L respectively. It should be noted that these temperature and pH receiving water conditions have not actually been observed through monitoring during the discharge period and are very conservative. Expected ammonia concentrations from the new WWTF will be 1.0 mg/L based upon the Discharger's

proposal in its Exception Request. Application of ammonia concentration at 1.0 mg/L to receiving water models used for the Exception Request indicated downstream ammonia concentrations up to 0.5 mg/L, below levels for ammonia toxicity. The Order therefore establishes an effluent limitation for the new WWTF for ammonia to protect aquatic life. This effluent limitation will take effect once the new WWTF is online.

b. Priority Pollutants

SIP section 1.3 requires the Regional Water Board to use all available, valid, relevant, and representative receiving water and effluent data and information to conduct a reasonable potential analysis (RPA). For this RPA, the Regional Water Board has used effluent and receiving monitoring data generated during 5 monitoring events that occurred in February 2002, January 2003, December 2003, March 2004, and November 2007.

Some freshwater water quality criteria are hardness-dependent; i.e., as hardness decreases, the toxicity of certain metals increases, and the applicable water quality criteria become correspondingly more stringent. For this RPA, a hardness concentration of 55 mg/L $CaCO_3$ was used, reflecting the lowest receiving water hardness measured by the Discharger during the term of the previous Order.

To conduct the RPA, Regional Water Board staff identified the maximum observed effluent (MEC) and background (B) concentrations for each priority, toxic pollutant from effluent and receiving water data provided by the Discharger, and compared this information to the most stringent applicable water quality criterion (C) for each pollutant with applicable water quality criteria from the NTR, CTR, and the Basin Plan. Section 1.3 of the SIP establishes three triggers for a finding of reasonable potential.

Trigger 1. If the MEC is greater than C, there is reasonable potential, and an effluent limitation is required.

Trigger 2. If B is greater than C, and the pollutant is detected in effluent (MEC > ND), there is reasonable potential, and an effluent limitation is required.

Trigger 3. After a review of other available and relevant information, a permit writer may decide that a WQBEL is required. Such additional information may include, but is not limited to: the facility type, the discharge type, solids loading analyses, lack of dilution, history of compliance problems, potential toxic impact of the discharge, fish tissue residue data, water quality and beneficial uses of the receiving water, CWA 303 (d) listing

for the pollutant, and the presence of endangered or threatened species or their critical habitat.

Priority Pollutant Reasonable Potential Determination

The RPA demonstrated reasonable potential for discharges from the City of Ferndale wastewater treatment facility for copper; lead; mercury; nickel; zinc; 2,3,7,8-TCDD; chlorodibromomethane; dichlorobromomethane; bis(2-ethylhexyl)phthalate; alpha-BHC; and heptachlor epoxide. Reasonable potential could not be determined for all pollutants, as there are not applicable water quality criteria and/or available monitoring data for all pollutants. The RPA determined that there is either no reasonable potential or there was insufficient information to conclude affirmative reasonable potential for the remainder of the 126 priority pollutants.

The following table summarizes the reasonable potential analysis for each priority pollutant that was reported in detectable concentrations in the effluent. The MECs, most stringent WQO/WQCs (C), and background concentrations (B) used in the RPA are presented in the following table, along with the RPA results (yes or no) for each toxic pollutant analyzed.

Table F-8. Summary of RPA Results

CTR #	Priority Pollutants	MEC or Minimum DL[a][b]	C	B or Minimum DL[a][b]	RPA Results[c]
1	Antimony	**0.2 µg/L**	6 µg/L	**0.3 µg/L**	No
2	Arsenic	**3.4**	50	**13.1**	No
3	Beryllium	<0.1	4	**1.2**	No
4	Cadmium	<0.02	1.54	**0.56**	No
5a	Chromium (III)	**3**	126.85	**17**	No
5b	Chromium (VI)	**2**	11.43	**2**	No
6	Copper	**9.6**	5.597	**30.4**	Yes (Trigger 1)
7	Lead	**0.7**	1.49	**21.4**	Yes (Trigger 2)
8	Mercury	**0.00515**	0.05	**0.0766**	Yes (Trigger 2)
9	Nickel	**7**	31.46	**84**	Yes (Trigger 2)
10	Selenium	**1**	5	**2.1**	No
11	Silver	**0.34**	1.45	**0.13**	No
12	Thallium	<0.01	1.7	**0.2**	No
13	Zinc	**25.8**	72.20	**172**	Yes (Trigger 2)
14	Cyanide	**2**	5.2	<2	No
15	Asbestos	<0.02	7000000	<0.2	No
16	2,3,7,8-TCDD	1.1E-07	1.3E-08	9.8E-07	Yes (Trigger 1)
17	Acrolein	<2.5	320	<2.5	No

CTR #	Priority Pollutants	MEC or Minimum DL[a][b]	C	B or Minimum DL[a][b]	RPA Results[c]
18	Acrylonitrile	<1	0.059	<1	No
19	Benzene	<0.5	1	<0.5	No
20	Bromoform	<0.5	4.3	<0.5	No
21	Carbon Tetrachloride	<0.5	0.25	<0.5	No
22	Chlorobenzene	<0.5	70	<0.5	No
23	Chlorodibromomethane	**2.3**	0.401	<0.5	Yes (Trigger 1)
24	Chloroethane	<0.5	No Criteria	<0.5	Ud
25	2-Chloroethylvinyl ether	<0.5	No Criteria	<0.5	Ud
26	Chloroform	**32**	No Criteria	<0.5	Ud
27	Dichlorobromomethane	**10**	0.56	<0.5	Yes (Trigger 1)
28	1,1-Dichloroethane	<0.5	5	<0.5	No
29	1,2-Dichloroethane	<0.5	0.38	<0.5	No
30	1,1-Dichloroethylene	<0.5	0.057	<0.5	No
31	1,2-Dichloropropane	<0.5	0.52	<0.5	No
32	1,3-Dichloropropylene	<0.3	10	<0.3	No
33	Ethylbenzene	<0.5	300	<0.5	No
34	Methyl Bromide	<0.5	48	<0.5	No
35	Methyl Chloride	<0.5	No Criteria	<0.5	Ud
36	Methylene Chloride	**2.6**	4.7	<1	No
37	1,1,2,2-Tetrachloroethane	<0.5	0.17	<0.5	No
38	Tetrachloroethylene	<0.5	0.8	<0.5	No
39	Toluene	**4**	150	<0.5	No
40	1,2-Trans-Dichloroethylene	<0.5	10	<0.5	No
41	1,1,1-Trichloroethane	<0.5	200	<0.5	No
42	1,1,2-Trichloroethane	<0.5	0.6	<0.5	No
43	Trichloroethylene	<0.5	2.7	<0.5	No
44	Vinyl Chloride	<0.5	0.5	<0.5	No
45	2-Chlorophenol	<1	120	<1	No
46	2,4-Dichlorophenol	<1	93	<1	No
47	2,4-Dimethylphenol	<1	540	<1	No
48	2-Methyl- 4,6-Dinitrophenol	<1	13.4	<1	No
49	2,4-Dinitrophenol	<1	70	<1	No
50	2-Nitrophenol	<1	No Criteria	<1	Ud
51	4-Nitrophenol	<1	No Criteria	<1	Ud
52	3-Methyl 4-Chlorophenol	<0.5	No Criteria	<0.5	Ud
53	Pentachlorophenol	<0.5	0.28	<0.5	No
54	Phenol	<0.5	21000	<0.5	No
55	2,4,6-Trichlorophenol	<1	2.1	<1	No

CTR #	Priority Pollutants	MEC or Minimum DL[a][b]	C	B or Minimum DL[a][b]	RPA Results[c]
56	Acenaphthene	<0.5	1200	<0.5	No
57	Acenaphthylene	<1	No Criteria	<1	Ud
58	Anthracene	<1	9600	<1	No
59	Benzidine	<1	0.00012	<1	No
60	Benzo(a)Anthracene	<1	0.0044	<1	No
61	Benzo(a)Pyrene	<1	0.0044	<1	No
62	Benzo(b)Fluoranthene	<1	0.0044	<1	No
63	Benzo(ghi)Perylene	<1	No Criteria	<1	Ud
64	Benzo(k)Fluoranthene	<2	0.0044	<2	No
65	Bis(2-Chloroethoxy)Methane	<1	No Criteria	<1	Ud
66	Bis(2-Chloroethyl)Ether	<0.5	0.031	<0.5	No
67	Bis(2-Chloroisopropyl)Ether	<0.5	1400	<0.5	No
68	Bis(2-Ethylhexyl)Phthalate	**12**	1.8	**19**	Yes (Trigger 1)
69	4-Bromophenyl Phenyl Ether	<1	No Criteria	<1	Ud
70	Butylbenzyl Phthalate	<1	3000	<1	No
71	2-Chloronaphthalene	<1	1700	<1	No
72	4-Chlorophenyl Phenyl Ether	<1	No Criteria	<1	Ud
73	Chrysene	<1	0.0044	<1	No
74	Dibenzo(a,h)Anthracene	<1	0.0044	<1	No
75	1,2-Dichlorobenzene	0.1	600	<0.1	No
76	1,3-Dichlorobenzene	<0.08	400	<0.08	No
77	1,4-Dichlorobenzene	**0.08**	5	<0.08	No
78	3,3 Dichlorobenzidine	<1	0.04	<1	No
79	Diethyl Phthalate	<1	23000	<1	No
80	Dimethyl Phthalate	<1	313000	<1	No
81	Di-n-Butyl Phthalate	<1	2700	<1	No
82	2,4-Dinitrotoluene	<1	0.11	<1	No
83	2,6-Dinitrotoluene	<1	No Criteria	<1	Ud
84	Di-n-Octyl Phthalate	<1	No Criteria	<1	Ud
85	1,2-Diphenylhydrazine	<0.5	0.04	<0.5	No
86	Fluoranthene	<0.5	300	<0.5	No
87	Fluorene	<2	1300	<2	No
88	Hexachlorobenzene	<0.5	0.00075	<0.5	No
89	Hexachlorobutadiene	<0.1	0.44	<0.1	No
90	Hexachlorocyclopentadiene	<1	50	<1	No

CTR #	Priority Pollutants	MEC or Minimum DL[a][b]	C	B or Minimum DL[a][b]	RPA Results[c]
91	Hexachloroethane	<0.5	1.9	<0.5	No
92	Indeno(1,2,3-cd)Pyrene	<1	0.0044	<1	No
93	Isophorone	<0.5	8.4	<0.5	No
94	Naphthalene	<0.2	No Criteria	<0.2	Ud
95	Nitrobenzene	<0.5	17	<0.5	No
96	N-Nitrosodimethylamine	<0.5	0.00069	<0.5	No
97	N-Nitrosodi-n-Propylamine	<1	0.005	<1	No
98	N-Nitrosodiphenylamine	<0.5	5	<0.5	No
99	Phenanthrene	<1	No Criteria	<1	Ud
100	Pyrene	<1	960	<1	No
101	1,2,4-Trichlorobenzene	<0.1	5	<0.1	No
102	Aldrin	<0.002	0.00013	<0.002	No
103	alpha-BHC	**0.011**	0.0039	<0.005	Yes (Trigger 1)
104	beta-BHC	<0.002	0.014	<0.002	No
105	gamma-BHC	<0.005	0.019	<0.005	No
106	delta-BHC	<0.002	No Criteria	**0.007**	Ud
107	Chlordane	<0.01	0.00057	<0.01	No
108	4,4'-DDT	<0.005	0.00059	<0.005	No
109	4,4'-DDE (linked to DDT)	<0.005	0.00059	<0.005	No
110	4,4'-DDD	<0.01	0.00083	<0.01	No
111	Dieldrin	<0.005	0.00014	<0.005	No
112	alpha-Endosulfan	<0.005	0.056	<0.005	No
113	beta-Endolsulfan	<0.005	0.056	<0.005	No
114	Endosulfan Sulfate	<0.01	110	<0.01	No
115	Endrin	<0.005	0.036	<0.005	No
116	Endrin Aldehyde	<0.005	0.76	<0.005	No
117	Heptachlor	<0.005	0.00021	<0.005	No
118	Heptachlor Epoxide	**0.009**	0.0001	<0.005	Yes (Trigger 1)
119-125	PCBs sum	<0.1	0.00017	<0.1	No
126	Toxaphene	<0.1	0.0002	<0.1	No

[a] The Maximum Effluent Concentration (MEC) or maximum background concentration is the actual detected concentration unless it is preceded by "<", in which case the value shown is the minimum detection level as the analytical result was reported as not detected (ND).

[b] The MEC or maximum background concentration is "Not Available" when there are no monitoring data for the constituent.

[c] RPA Results:

= Yes, if MEC > WQO/WQC, or B > WQO/WQC and MEC is detected;
= No, if MEC and B are < WQO/WQC or all effluent data are undetected;
= Undetermined (Ud), if no criteria have been promulgated;
= Cannot Determine, if there are insufficient data.

4. WQBEL Calculations

Final WQBELs for copper; lead; mercury; nickel; zinc; 2,3,7,8-TCDD; chlorodibromomethane; dichlorobromomethane; bis(2-ethylhexyl)phthalate; alpha-BHC; and heptachlor epoxide have been determined using the methods described in section 1.4 of the SIP.

Step 1: To calculate the effluent limits, an effluent concentration allowance (ECA) is calculated for each pollutant found to have reasonable potential using the following equation, which takes into account dilution and background concentrations:

ECA = C + D (C – B), where

C = the applicable water quality objective or criterion (adjusted for receiving water hardness and expressed as the total recoverable metal, if necessary)

D = dilution credit (here D= 0, as the discharge to Francis Creek / the Salt River does not qualify for a dilution credit)

B = background concentration

Here, because no credit for dilution is allowed, the ECA is equal to the applicable criterion (ECA = C).

Step 2: For each ECA based on an aquatic life criterion/objective (here, copper, lead, nickel, and zinc), the long term average discharge condition (LTA) is determined by multiplying the ECA by a factor (multiplier), which adjusts the ECA to account for effluent variability. The multiplier depends on the coefficient of variation (CV) of the data set and whether it is an acute or chronic criterion/objective. Table 1 of the SIP provides pre-calculated values for the multipliers based on the values of the CV. When the data set contains less than 10 sample results (as for the City of Ferndale Wastewater Treatment Facility), or when 80 percent or more of the data set is reported as non-detect (ND), the CV is set equal to 0.6. Derivation of the multipliers is presented in section 1.4 of the SIP.

From Table 1 of the SIP, the ECA multipliers for calculating LTAs at the 99th percentile occurrence probability are 0.321 (acute multiplier) and 0.527 (chronic multiplier). The LTAs are determined as follows in Table F-9.

Table F-9. Determination of Long Term Averages

Pollutant	ECA		ECA Multiplier		LTA (µg/L)	
	Acute	Chronic	Acute	Chronic	Acute	Chronic
Copper	8.0	5.6	0.321	0.527	2.56	2.95
Lead	38.1	1.49	0.321	0.527	12.25	0.78
Nickel	282.9	31.5	0.321	0.527	90.84	16.59
Zinc	72.2	72.2	0.321	0.527	23.18	38.08

Step 3: WQBELs, including an average monthly effluent limitation (AMEL) and a maximum daily effluent limitation (MDEL) are calculated using the most limiting (lowest) LTA. The LTA is multiplied by a factor that accounts for averaging periods and exceedence frequencies of the effluent limitations, and for the AMEL, the effluent monitoring frequency. Here the CV is set equal to 0.6, and the sampling frequency is set equal to 4 (n = 4). The 99th percentile occurrence probability was used to determine the MDEL multiplier and a 95th percentile occurrence probability was used to determine the AMEL multiplier. From Table 2 of the SIP, the MDEL multiplier is 3.11, and the AMEL multiplier is 1.55. Final WQBELs for copper, lead, nickel, and zinc, are determined as follows.

Table F-10 Determination of Final WQBELs for Priority Pollutants Based on Aquatic Life Criteria

Pollutant	LTA (µg/L)	MDEL Multiplier	AMEL Multiplier	MDEL (µg/L)	AMEL (µg/L)
Copper	2.56	3.11	1.55	8.0	4.0
Lead	0.78	3.11	1.55	2.4	1.2
Nickel	16.59	3.11	1.55	52	26
Zinc	23.18	3.11	1.55	72	36

The final effluent limits presented above for copper, lead, nickel, and zinc are based on a receiving water hardness of 55 mg/L. Because receiving water hardness can vary, actual effluent limitations will be determined based on measured receiving water hardness at the time that compliance monitoring is performed. Effluent limitations at varying levels of receiving water hardness are presented in Table E-9 in Attachment E of this Order.

Step 4: When the most stringent water quality criterion/objective is a human health criterion/objective (as in these circumstances for mercury; 2,3,7,8-TCDD; chlorodibromomethane; dichlorobromomethane; bis(2-ethylhexyl)phthalate; alpha-BHC; and heptachlor epoxide), the AMEL is set equal to the ECA. From

Table 2 of the SIP, when CV = 0.6 and n = 4, the MDEL multiplier at the 99th percentile occurrence probability equals 3.11, and the AMEL multiplier at the 95th percentile occurrence probability equals 1.55. The MDEL for protection of human health is calculated by multiplying the ECA by the ratio of the MDEL multiplier to the AMEL multiplier. Final WQBELs for mercury; 2,3,7,8-TCDD; chlorodibromomethane; dichlorobromomethane; bis(2-ethylhexyl)phthalate; alpha-BHC; and heptachlor epoxide are determined as follows.

Table F-11. Determination of Final WQBELs Based on Human Health Criteria

Pollutant	ECA (µg/L)	MDEL/AMEL	MDEL (µg/L)	AMEL (µg/L)
Mercury	0.05	2.01 (3.11/1.55)	0.1	0.05
2,3,7,8-TCDD	1.3E-08	2.01	2.6E-08	1.3E-08
Chlorodibromomethane	0.401	2.01	0.8	0.4
Dichlorobromomethane	0.56	2.01	1.1	0.6
Bis(2-Ethylhexyl)Phthalate	1.8	2.01	3.6	1.8
alpha-BHC	0.0039	2.01	0.008	0.004
Heptachlor Epoxide	0.0001	2.01	0.0002	0.0001

5. Whole Effluent Toxicity (WET)

Effluent limitations for whole effluent, acute and chronic toxicity, protect the receiving water from the aggregate effect of a mixture of pollutants that may be present in effluent. There are two types of WET tests – acute and chronic. An acute toxicity test is conducted over a short time period and measures mortality. A chronic test is conducted over a longer period of time and may measure mortality, reproduction, and/or growth. The Basin Plan establishes a narrative water quality objective for toxicity, requiring that all waters be maintained free of toxic substances in concentrations that are lethal to, or produce other detrimental responses in aquatic organisms. Detrimental responses may include, but are not limited to, decreased growth rate, decreased reproductive success of resident or indicator species, and/or significant alterations in population, community ecology, or receiving water biota. The existing Order includes an effluent limitation for acute toxicity in accordance with the Basin Plan, which requires that the average survival of test organisms in undiluted effluent for any three consecutive 96-hour bioassay tests be at least 90 percent, with no single test having less than 70 percent survival.

In addition to the Basin Plan requirements, section 4 of the SIP states that chronic toxicity limitations are required in Orders for all discharges that will cause, have the reasonable potential to cause, or contribute to chronic toxicity in receiving waters. This Order does not establish an effluent limitation for chronic toxicity; however, chronic WET monitoring is required and limitations

will be established if monitoring results demonstrate that discharges from the wastewater treatment facility are causing or contributing to chronic toxicity in the receiving water.

D. Final Effluent Limitations

1. Satisfaction of Anti-Backsliding Requirements

Except as provided in title 40, section 122.44(l)(2), federal anti-backsliding regulations require effluent limitations, standards and conditions contained in reissued permits to be as least as stringent as the effluent limitations, standards, or conditions contained in the previous permit. The condition limiting the discharge rate of treated wastewater has been relaxed from one percent (100:1) of the receiving water flow in the previous Order to one hundred percent of the receiving water flow (1:1) during the period between October 1 and May 15 each year. This relaxed condition will go into effect once the new WWTF is online. The addition of the new WWTF is a material and substantial alteration that justifies that application of a less stringent effluent limit. (40 CFR 122.44(l)((2)(i)(A.) Because the new WWTF will provide tertiary quality effluent, replacing the existing WWTF that now provides equivalent to secondary quality effluent, the quality of the discharge will significantly improve, resulting in an overall improvement to existing conditions in the receiving water.

In addition, the Discharger has provided technical justification for a discharge rate increase contained in the Exception Request, discussed in detail under section IV.C.1. of this Fact Sheet. This information was not available at the time the previous permit was issued. The Exception Request documents the projected water quality that will occur once the new WWTF is online, which will constitute an overall improvement to existing conditions in the receiving water. All other effluent limitations, standards, and conditions contained in this Order are at least as stringent as the effluent limitations in the previous Order.

In addition, where a permit contains a less stringent effluent limitation than in the previous permit, CWA section 402(o) requires compliance with CWA 303(d)(4). Where the water quality meets or exceeds the applicable water quality standard for that constituent, section 303(d)(4) allows the effluent limitation to be revised only if it is consistent with the anti-degradation policy. As explained below, this permit satisfies the requirements of the federal and state antidegradation policies.

2. Satisfaction of Antidegradation Policy

This Order is consistent with applicable federal and State antidegradation policies, as it does not authorize the discharge of increased concentrations of

pollutants or increased volumes of treated wastewater. In fact, overall water quality in the receiving water will improve.

3. Stringency of Requirements for Individual Pollutants

This Order contains both technology-based and water quality-based effluent limitations for individual pollutants. The technology-based effluent limitations consist of restrictions on BOD and TSS. Restrictions on these pollutants are discussed in sections IV.B.2 and IV.D of the Fact Sheet. This Order's technology-based pollutant restrictions implement the minimum, applicable federal technology-based requirements applicable to both the existing and new WWTFs. In addition, this Order contains effluent limitations for chlorine residual, pH, total coliform bacteria, settleable solids, total nitrogen, nitrate, ammonia, and several toxic pollutants that are more stringent than the minimum, federal technology-based requirements but are necessary to meet water quality standards. These requirements are discussed in section IV.C.3 of the Fact Sheet.

Water quality-based effluent limitations have been scientifically derived to implement water quality objectives that protect beneficial uses. Both the beneficial uses and the water quality objectives have been approved pursuant to federal law and are the applicable federal water quality standards. To the extent that toxic pollutant water quality-based effluent limitations were derived from the CTR, the CTR is the applicable standard pursuant to section 131.38. The scientific procedures for calculating the individual water quality-based effluent limitations for priority pollutants are based on the CTR-SIP, which was approved by USEPA on May 18, 2000. Most beneficial uses and water quality objectives contained in the Basin Plan were approved under State law and submitted to and approved by USEPA prior to May 30, 2000. Any water quality objectives and beneficial uses submitted to USEPA prior to May 30, 2000, but not approved by USEPA before that date, are nonetheless "applicable water quality standards for purposes of the CWA" pursuant to section 131.21(c)(1). The remaining water quality objectives and beneficial uses implemented by this Order (specifically the addition of the beneficial use of Native American Culture (CUL) and the General Objective regarding antidegradation) were approved by USEPA on March 4, 2005, and are applicable water quality standards pursuant to section 131.21(c)(2). Collectively, this Order's restrictions on individual pollutants are no more stringent than required to implement the requirements of the CWA.

4. Summary of Final Effluent Limitations

a. Summary of Final Effluent Limitations for the existing WWTF Discharge Point 001

Final effluent limitations for the existing WWTF at Discharge Point 001 are summarized below in Table F-12 and the bulleted text.

Table F-12. Final Effluent Limitations Existing WWTF – Discharge Point 001

Parameter	Units	Effluent Limitations – 001				
		Average Monthly[12]	Average Weekly	Maximum Daily	Instantaneous Minimum	Instantaneous Maximum
Biochemical Oxygen Demand 5-day @ 20°C	mg/L	30	45	---	---	---
	lbs/day [13,14]	144	216	---	---	---
Total Suspended Solids	mg/L	44	66	---	---	---
	lbs/day	211	317	---	---	---
Settleable Solids	ml/L	0.1	---	0.2		
Total Coliform Organisms	MPN/100 ml	23 [15]	---	230	---	---
pH	standard units	---	---	---	6.5	8.5
Chlorine Residual	mg/L	0.01	---	0.02	---	---
Copper[16]	µg/L	4.0	---	8.0	---	---
Lead [6]	µg/L	1.2	---	2.4	---	---
Mercury	µg/L	0.05	---	0.10	---	---
Nickel [6]	µg/L	26	---	52	---	---
Zinc [6]	µg/L	36	---	72	---	---
2,3,7,8 TCDD	µg/L	0.000000013	---	0.000000026	---	---

[12] See Attachment A for definitions

[13] The mass discharge (lbs/day) is obtained from the following calculation for any calendar week or month:

$$\frac{8.34}{N}\sum_{i}^{N} Q_i C_i$$

in which N is the number of samples analyzed in any calendar week or month. Q_i and C_i are the flow rate (mgd) and the constituent concentration (mg/L), respectively, which are associated with each of the N grab samples, which may be taken in any calendar week or month. If a composite sample is taken, C_i is the concentration measured in the composite sample; and Q_i is the average flow rate occurring during the period over which samples are composited.

[14] Mass-based effluent limitations are based on the average dry weather flow of 0.576 mgd.

[15] The median of all samples collected in a 30-day calendar period.

[16] Final effluent limitations for this metal are dependent on the hardness of the receiving water and shall be determined at each time that effluent is monitored in accordance with Table E-9 contained in Appendix E of the Order

Parameter	Units	Effluent Limitations – 001				
		Average Monthly[12]	Average Weekly	Maximum Daily	Instantaneous Minimum	Instantaneous Maximum
Chlorodibromomethane	µg/L	0.401	---	0.804	---	---
Dichlorobromomethane	µg/L	0.56	---	1.1	---	---
Bis(2-Ethylhexyl)Phthalate	µg/L	1.8	---	3.6	---	---
alpha-BHC	µg/L	0.0039	---	0.008	---	---
Heptachlor Epoxide	µg/L	0.0001	---	0.0002	---	---

- **Percent Removal**. The average monthly percent removal of BOD_5 and TSS shall not be less than 65percent. Percent removal shall be determined from the 30-day average value of influent wastewater concentration in comparison to the 30-day average value of effluent concentration for the same constituent over the same time period as measured at Monitoring Locations M-INF and EFF-001, respectively.

- **Mean daily dry weather flow**. Mean daily dry weather flow of waste through the treatment plant shall not exceed 0.576 mgd, measured over a period of 30 consecutive days.

- **Acute Toxicity**. There shall be no acute toxicity in treated wastewater discharged to the Eel River and its tributaries. The Discharger will be considered compliant with this limitation when the survival of aquatic organisms in a 96-hour bioassay of undiluted effluent complies with the following.

  1. Minimum for any one bioassay: 70 percent survival

  2. Median for any three or more consecutive bioassays: at least 90 percent survival

b. Summary of Final Effluent Limitations for the new WWTF Discharge Point 001

Final effluent limitations for the new WWTF at Discharge Point 001 are summarized below in Table F-13 and the bulleted text.

Table F-13. Effluent Limitations New WWTF – Discharge Point 001

Parameter	Units	Effluent Limitations New WWTF – Discharge Point 001				
		Average Monthly [17]	Average Weekly	Maximum Daily	Instantaneous Minimum	Instantaneous Maximum
Biochemical Oxygen Demand 5-day @ 20°C	mg/L	10	15	---	---	---
	lbs/day[18, 19]	79	119	---	---	---
Total Suspended Solids	mg/L	10	15	---	---	---
	lbs/day[3 4]	79	119	---	---	---
Settleable Solids	ml/L	0.1	---	0.2		
Total Coliform Organisms	MPN/100 ml	23 [20]	---	230	---	---
pH	standard units	---	---	---	6.5	8.5
Ammonia	mg/L	1.0	---	---	---	---
Nitrate	mg/L	10	---	---	---	---
Total Nitrogen	mg/L	10	---	---	---	---
Copper[21]	µg/L	4.0	---	8.0	---	---
Lead [6]	µg/L	1.2	---	2.4	---	---
Mercury	µg/L	0.05	---	0.10	---	---
Nickel [6]	µg/L	26	---	52	---	---
Zinc [6]	µg/L	36	---	72	---	---
2,3,7,8 TCDD	µg/L	0.000000 013	---	0.000000026	---	---
Chlorodibromo methane	µg/L	0.401	---	0.804	---	---
Dichlorobromo	µg/L	0.56	---	1.1	---	---

[17] See Attachment A for definitions

[18] The mass discharge (lbs/day) is obtained from the following calculation for any calendar week or month:

$$\frac{8.34}{N}\sum_{i}^{N} Q_i C_i$$

in which N is the number of samples analyzed in any calendar week or month. Q_i and C_i are the flow rate (mgd) and the constituent concentration (mg/L), respectively, which are associated with each of the N grab samples, which may be taken in any calendar week or month. If a composite sample is taken, C_i is the concentration measured in the composite sample; and Q_i is the average flow rate occurring during the period over which samples are composited.

[19] Mass-based effluent limitations are based on the peak wet weather flow of 0.95 mgd.

[20] The median of all samples collected in a 30-day calendar period

[21] Final effluent limitations for this metal are dependent on the hardness of the receiving water and shall be determined at each time that effluent is monitored in accordance with Table E-9 contained in Appendix E of the Order

Parameter	Units	Effluent Limitations New WWTF – Discharge Point 001				
		Average Monthly [17]	Average Weekly	Maximum Daily	Instantaneous Minimum	Instantaneous Maximum
methane						
Bis(2-Ethylhexyl)Phthalate	µg/L	1.8	---	3.6	---	---
alpha-BHC	µg/L	0.0039	---	0.0078	---	---
Heptachlor Epoxide	µg/L	0.0001	---	0.0002	---	---

- **Percent Removal**. The average monthly percent removal of BOD_5 and TSS shall not be less than 85 percent. Percent removal shall be determined from the 30-day average value of influent wastewater concentration in comparison to the 30-day average value of effluent concentration for the same constituent over the same time period as measured at Monitoring Locations M-INF and EFF-001, respectively.

- **Discharge Rate**. During the period from October 1 through May 14, discharges of treated wastewater shall not exceed one-hundred percent (1:1) of the receiving water flow.

- **Flow**. The mean daily dry weather flow of waste through the treatment plant shall not exceed 0.55 mgd, measured over a calendar month. The average wet weather flow of waste through the treatment plant shall not exceed 0.95 mgd, averaged over a calendar month.

- **Acute Toxicity**. There shall be no acute toxicity in treated wastewater discharged to the Eel River and its tributaries. The Discharger will be considered compliant with this limitation when the survival of aquatic organisms in a 96-hour bioassay of undiluted effluent complies with the following.

  1. Minimum for any one bioassay: 70 percent survival

  2. Median for any three or more consecutive bioassays: at least 90 percent survival.

  Compliance with the acute toxicity effluent limitation shall be determined in accordance with section V of the Monitoring and Reporting Program (Attachment E) of this Order.

E. Interim Effluent Limitations

This section does not apply to the City of Ferndale Wastewater Treatment Facility.

F. Land Discharge Specifications

This section does not apply to the City of Ferndale Wastewater Treatment Facility.

G. Reclamation Specifications

The Reclamation Specifications found in section IV.C.1 through section IV.C.14 of this Order conform to regulations contained in title 22, Cal. Code of Regs., Division 4, Chapter 3.
Disinfected secondary treated effluent is considered suitable for irrigation. The draft permit includes the disinfection standard prescribed by the expired Order; a median total coliform count not to exceed a most probable number (MPN) of 23 per 100 mL of effluent with no single sample exceeding a MPN of 230 per 100 mL. Secondary treatment is considered adequate to achieve stabilization of organic matter as well as prevent anaerobic and putrecible conditions. This order includes effluent limitations for biochemical oxygen demand and total suspended solids consistent with secondary treatment.

V. RATIONALE FOR RECEIVING WATER LIMITATIONS

A. Surface Water

1. CWA section 303(a-c) requires states to adopt water quality standards, including criteria where they are necessary to protect beneficial uses. The Regional Water Board adopted water quality criteria as water quality objectives in the Basin Plan. The Basin Plan states that "*[t]he numerical and narrative water quality objectives define the least stringent standards that the Regional [Water] Board will apply to regional waters in order to protect the beneficial uses."* The Basin Plan includes numeric and narrative water quality objectives for various beneficial uses and water bodies. This Order contains Receiving Surface Water Limitations based on the Basin Plan numerical and narrative water quality objectives for biostimulatory substances, bacteria, chemical constituents, color, dissolved oxygen, floating material, oil and grease, pH, pesticides, radioactivity, sediment, settleable material, suspended material, tastes and odors, temperature, toxicity, and turbidity.

B. Groundwater

1. The beneficial uses of the underlying ground water are municipal and domestic supply, industrial service supply, industrial process supply, agricultural supply,

and freshwater replenishment to surface waters. Groundwater limitations are required to protect the beneficial uses of the underlying groundwater.

2. State Water Board Resolution No. 68-16, requires, in part, that whenever the existing quality of water is better than the quality established in policies as of the date on which such policies become effective, such existing high quality water will be maintained until it is demonstrated to the state that any changes will be consistent with maximum benefit to the people of the state, will not unreasonably affect beneficial uses of such water, and will not result in water quality less than prescribed in the policies. This Order does not allow degradation of groundwater.

I. RATIONALE FOR MONITORING AND REPORTING REQUIREMENTS

Section 122.48 requires that all NPDES permits specify requirements for recording and reporting monitoring results. Water Code sections 13267 and 13383 authorizes the Regional Water Board to require technical and monitoring reports. The Monitoring and Reporting Program (MRP), Attachment E of this Order, establishes monitoring and reporting requirements to implement federal and state requirements. The following provides the rationale for the monitoring and reporting requirements contained in the MRP for this facility.

A. Influent Monitoring

Influent monitoring requirements for BOD_5 and TSS are retained from the previous permit and are necessary to determine compliance with the Order's percent removal requirements for these parameters.

B. Effluent Monitoring

Effluent monitoring requirements contained in Table F-14 have been retained from the previous permit. These monitoring requirements are necessary to detemine compliance with prohibitions and/or effluent limitations established by the Order. Effluent monitoring requirements for chronic toxicity have also been retained from the previous permit. These monitoring requirements enable the Regional Water Board to assess compliance with the Basin Plan's narrative water quality objective for toxicity that is applicable to all receiving waters of the Region.

Table F-14. Required Effluent Monitoring Retained From Previous Permit

Parameter	Parameter
Flow	Acute Toxicity
Biochemical Oxygen Demand	Chronic Toxicity
Total Suspended Solids	Copper
Settleable Solids	Lead

Parameter	Parameter
pH	Mercury
Temperature	Nickel
Chlorine Residual	Zinc
Total Coliform Organisms	2,3,7,8-TCDD
Ammonia Nitrogen	Chlorodibromomethane
Nitrate Nitrogen	Dichlorobromomethane
Total Nitrogen	Bis(2-Ethylhexyl)Phthalate
Total Phosphorous	Alpha-BHC
Total Dissolved Solids	Heptachlor Epoxide
CTR Pollutants	

C. Whole Effluent Toxicity Testing Requirements

1. Acute Toxicity

a. Rationale. 96-hour bioassay testing is required to demonstrate compliance with the effluent limitation for acute toxicity (Effluent Limitation IV.A.1.d).

b. Test Frequency. The MRP retains a quarterly monitoring frequency from the previous permit in accordance with USEPA's recommendation for monthly WET testing for facilities listed as "major facilities" and quarterly testing for "minor facilities." (*Regions 9 & 10 Guidance for Implementing Whole Effluent Toxicity Testing Programs,* USEPA, 1996).

c. Sample Type. This Order specifies a 96-hour static renewal or static non-renewal test as described in *Methods for Measuring the Acute Toxicity of Effluents and Receiving Waters to Freshwater and Marine Organisms* (USEPA Report No. EPA-821-R-02-012, 5th edition or subsequent editions). Upon request, other methods may be approved by the Regional Water Board's Executive Officer.

d. Test Species. This Order requires the Discharger to conduct acute toxicity tests with the water flea, *Ceriodaphnia dubia*, and the rainbow trout, *Oncorhynchus mykiss*, for at least two suites of tests. For the first two suites of acute toxicity tests, the Discharger will determine the most sensitive aquatic species and continue to monitor with the most sensitive species. At least once every five years, the Discharger will rescreen to reconfirm the most sensitive species for the acute toxicity test.

e. Test Method. The presence of acute toxicity shall be estimated as specified in effluent limitation IV.A.1.e of the Order and shall be consistent with *Methods for Measuring the Acute Toxicity of Effluents and Receiving Waters to Freshwater and Marine Organisms* (USEPA Report No. EPA-821-R-02-

012, 5th edition or subsequent editions). Upon request, other methods may be approved by the Regional Water Board Executive Officer.

f. **Dilution Water.** Acute toxicity tests shall be conducted using undiluted effluent.

g. **Test Failure**. If an acute toxicity test does not meet all test acceptability criteria, as specified in the test method, the Discharger shall re-sample and re-test as soon as possible, not to exceed 7 days following notification of test failure.

h. **Accelerated Monitoring.** The provision requires accelerated acute toxicity testing when routine acute toxicity test results exceed the single sample effluent limitation (70 percent survival). The purpose of accelerated monitoring is to determine, in an expedient manner, whether there is a pattern of toxicity before requiring the implementation of a TRE. Under this provision, the Discharger is required to conduct testing on at least two additional samples, one within 14 days, and one within 21 days of receiving the initial sample result. If any of the additional samples do not comply with the three sample median minimum limitation (90 percent survival) using that sample result and the two previous sample results, the Discharger shall initiate a TRE. If any test of a sample is ruled invalid, the Discharger will re-sample within 7 days following notification of test invalidation.

i. **Notification and Reporting.** The MRP includes notification requirements regarding test results that exceed the acute toxicity effluent limitation and require reporting of whole effluent toxicity test results in accordance with the acute toxicity manual Chapter 12 (Report Preparation) or in an equivalent format.

2. **Chronic Toxicity**

a. **Rationale.** Chronic whole effluent toxicity (WET) testing is required two times per year, during the discharge season, in order to demonstrate compliance with the Basin Plan's narrative toxicity objective.

b. **Test Frequency.** The USEPA has no fixed guidance on the establishment of monitoring frequency, but recommends monthly WET testing for facilities listed as "major facilities" and quarterly testing for "minor facilities" during the first year of WET testing in order to develop sufficient data to conduct a reasonable potential analysis. USEPA further recommends that a reduction in sampling frequency is appropriate if no individual toxicity test exceeds the WET limit or trigger. For small municipalities, not designated as "major facilities," the USEPA recommends at least one suite of tests to be conducted during the lifetime of the permit and prior to reissuance in order

to assess reasonable potential. *(Regions 9 & 10 Guidance for Implementing Whole Effluent Toxicity Programs*, USEPA, 1996).

This Order specifies routine monitoring for chronic toxicity, two times per year during the discharge season.

c. **Sample Location**. Representative effluent samples shall be collected at Monitoring Location EFF-001, when discharging to surface water.

d. **Sample Type.** The Discharger shall collect an 24 hour composite samples of effleunt discharged from Discharge Point EFF-001 for critical life stage toxicity testing as indicated in this Order.

e. **Test Species.** This Order requires the Discharger to conduct short-term tests with the water flea, *Ceriodaphnia dubia* (survival and reproduction test), the fathead minnow, *Pimephales promelas* (larval survival and growth test), and the green alga, *Selenastrum capricornutum* (growth test). Initially, the Discharger is required to determine the most sensitive test species and monitor the discharge for chronic toxicity using that species for no more than five years, whereupon, the Discharger will repeat the screening procedure to confirm the most sensitive species. If reasonable potential to exceed the narrative water quality objective is found to exist, the Permit may be reopened to include a chronic toxicity limitation, as appropriate. The Basin Plan does not allow a mixing zone for this discharge; therefore, reasonable potential will be based on results of chronic toxicity tests from samples collected at the end of the pipe.

f. **Test Method.** The presence of chronic toxicity shall be estimated as specified in and shall be consistent with *Short-Term Methods for Estimating the Chronic Toxicity of Effluents and Receiving Waters to Freshwater Organisms,* Fourth Edition, EPA-821-R-02-013, October, 2002.

g. **Dilution Water.** Control and dilution water should be receiving water at a location immediately upstream and outside the influence of the outfall for all test methods except the short-term chronic *Selenastrum capricornutum* test. For the *S. capricornutum* test method, synthetic laboratory water with a hardness similar to the receiving water shall be used as a control and diluent. Laboratory water may be substituted for receiving water, as described in the manual, upon approval by the Regional Water Board Executive Officer.

h. **Accelerated Monitoring.** Guidance regarding accelerated monitoring and TRE initiation is provided in the *Technical Support Document for Water Quality-Based Toxics Control*, EPA/505/2-90-001, March 1991 (TSD). The TSD at page 118 states, “EPA receommends if toxicity is repeatedly or

periodically present at levels above effluent limits more than 20 percent of the time, a TRE should be required." If there is adequate evidence of a pattern of effluent toxicity (i.e., toxicity present exceeding the monitoring trigger 20 percent of the time), the Regional Water Board's Executive Officer will require the Discharger to initiate a TRE. The TRE will include follow-up monitoring requirements to assure toxicity has been mitigated. Due to possible seasonality of the toxicity, the accelerated monitoring should be performed in a timely manner, preferably taking no more than 2 to 3 months to complete.

i. **Monitoring Trigger.** A numeric chronic toxicity monitoring trigger of 1.0 TUc (where TUc = 100/NOEC) is established by the Order, because this Order does not allow any dilution for the chronic condition. Therefore, a TRE is triggered when the effluent exhibits a pattern of toxicity at 100 percent effluent.

D. Receiving Water Monitoring

1. Surface Water receiving water monitoring requirements contained in Table F-15 have been retained from the from the previous permit. These monitoring requirements are necessary to detemine compliance with prohibitions, effluent limitations, and receiving water limitations established by the Order.

Table F-15. Required Receiving Water Monitoring Retained From Previous Permit

Parameter	Parameter
Flow	Ammonia Nitrogen
Dissolved Oxygen	Nitrate Nitrogen
pH	Total Phosphorous
Temperature	Visual Observations
Turbidity	CTR Pollutants
Specific Conductance	

2. Surface Water receiving water monitoring requirements are newly established by the Monitoring and Reporting Program (Attachment E of this Order) for an additional downstream location at R-003 for dissolved oxygen, pH, temperature, specific conductance, and visual observations. The monitoring requirements have been established to confirm assumptions of beneficial use protection presented in the Discharger"s Exception Request.

3. This Order does not establish groundwater monitoring requirements.

a. Other Monitoring Requirements

Operations monitoring for the ultraviolet disinfection sytem has been newly established by the Monitoring and Reporting Program (Attachment E of this Order). These monitoring requirements are established to document proper operations and maintenance of the disinfection system for the new WWTF. This monitoring is intended to ensure adhereance to proper standards for ultraviolet light doesage are implemented, adequate disinfection occurs, and maintain required bacterial monitoring at a weekly frequency.

VII. RATIONALE FOR PROVISIONS

A. Standard Provisions

Standard Provisions, which apply to all NPDES permits in accordance with section 122.41, and additional conditions applicable to specified categories of permits in accordance with section 122.42, are provided in Attachment D. The discharger must comply with all standard provisions and with those additional conditions that are applicable under section 122.42.
Section 122.41(a)(1) and (b) through (n) establish conditions that apply to all State-issued NPDES permits. These conditions must be incorporated into the permits either expressly or by reference. If incorporated by reference, a specific citation to the regulations must be included in the Order. Section 123.25(a)(12) allows the state to omit or modify conditions to impose more stringent requirements. In accordance with section 123.25, this Order omits federal conditions that address enforcement authority specified in sections 122.41(j)(5) and (k)(2) because the enforcement authority under the Water Code is more stringent. In lieu of these conditions, this Order incorporates by reference Water Code section 13387(e).

B. Regional Water Board Standard Provisions

In addition to the Federal Standard Provisions (Attachment D), the Discharger must comply with the Regional Water Board Standard Provisions provided in Standard Provisions VI.A.2.

1. Order Provision VI.A.2.a identifies the State's enforcement authority under the Water Code, which is more stringent than the enforcement authority specified in the federal regulations (e.g., title 40, sections 122.41(j)(5) and (k)(2)).

2. Order Provision VI.A.2.b requires the Discharger to notify Regional Water Board staff, orally and in writing, in the event that the Discharger does not comply or will be unable to comply with any Order requirement. The Provision requires the Discharger to make direct contact with a Regional Water Board staff person.

3. Order Provision VI.A.2.c requires the Discharger to petition with, and receive approval from, the State Water Board Division of Water Rights prior to making any change in the point of discharge, place of use, or purpose of use of treated wastewater that results in a decrease of flow in any portion of a watercourse. This requirement is mandated by Water Code section 1211.

C. Special Provisions

1. Reopener Provisions

a. Standards Revisions (Special Provisions VI.C.1.a). Conditions that necessitate a major modification of a permit are described in title 40, section 122.62, which include the following:

(1) When standards or regulations on which the permit was based have been changed by promulgation of amended standards or regulations or by judicial decision. Therefore, if revisions of applicable water quality standards are promulgated or approved pursuant to section 303 of the CWA or amendments thereto, the Regional Water Board will revise and modify this Order in accordance with such revised standards.

(2) When new information, that was not available at the time of permit issuance, would have justified different permit conditions at the time of issuance.

b. Reasonable Potential (Special Provisions VI.C.1.b). This provision allows the Regional Water Board to modify, or revoke and reissue, this Order if present or future investigations demonstrate that the Discharger governed by this Permit is causing or contributing to excursions above any applicable priority pollutant criterion or objective or adversely impacting water quality and/or the beneficial uses of receiving waters.

c. Whole Effluent Toxicity (Special Provisions VI.C.1.c). This Order requires the Discharger to investigate the causes of, and identify corrective actions to reduce or eliminate effluent toxicity through a TRE. This Order may be reopened to include a numeric chronic toxicity limitation, a new acute toxicity limitation, and/or a limitation for a specific toxicant identified in the TRE. Additionally, if a numeric chronic toxicity water quality objective is adopted by the State Water Board, this Order may be reopened to include a numeric chronic toxicity limitation based on that objective.

d. 303(d)-Listed Pollutants (Special Provisions VI.C.1.d). This provision allows the Regional Water Board to reopen this Order to modify existing effluent limitations or add effluent limitations for pollutant(s) that are the subject of any future TMDL action.

e. **Special Studies (Special Provisions VI.C.1.e).** The Discharger may elect to study the feasibility of the use of water effect ratios and/or mixing zones to meet water quality objectives and effluent limitations for toxic pollutants. If these or other future water quality studies such as the required reclamation / recycled water evaluation provide new information and a basis for determining that a permit condition or conditions should be modified, the Regional Water Board may reopen this Order and make appropriate modifications to this Order.

2. **Special Studies and Additional Monitoring Requirements**

a. **Toxicity Reduction Evaluations (Special Provision VI.C.2.a).** The SIP requires the use of short-term chronic toxicity tests to determine compliance with the narrative toxicity objectives for aquatic life in the Basin Plan. Attachment E of this Order requires chronic toxicity monitoring for demonstration of compliance with the narrative toxicity objective.

In addition to WET monitoring, Special Provisions VI.C.2.a.(1) requires the Discharger to submit to the Regional Water Board an initial investigative TRE Work Plan for approval by the Executive Officer, to ensure the Discharger has a plan to immediately move forward with the initial tiers of a TRE, in the event effluent toxicity is encountered in the future. The TRE is initiated by evidence of a pattern of toxicity demonstrated through the additional effluent monitoring provided as a result of an accelerated monitoring program.

b. **TRE Guidance.** The Discharger is required to prepare a TRE Work Plan in accordance with USEPA guidance. Numerous guidance documents are available, as identified below:

1. *Toxicity Reduction Evaluation Guidance for Municipal Wastewater Treatment Plants (EPA/833B-99/002)*, August 1999.

2. *Generalized Methodology for Conducting Industrial TREs, (EPA/600/2-88/070)*, April 1989.

3. *Methods for Aquatic Toxicity Identification evaluations: Phase I Toxicity Characterization Procedures*. Second Edition, EPA 600/6-91/005F, February 1991.

4. *Toxicity Identification evaluation: Characterization of Chronically Toxic Effluents, Phase I,* EPA 600/6-91/005F, May 1992.

5. *Methods for Aquatic Toxicity Identification Evaluations: Phase II Toxicity Identification Procedures for Samples Exhibiting Acute and Chronic Toxicity,* Second Edition, EPA 600/R-92/080, September 1993.

6. *Methods for Aquatic Toxicity Identification Evaluations: Phase III Toxicity Confirmation Procedures for Samples Exhibiting Acute and Chronic Toxicity,* Second Edition, EPA 600/R-92/081, September 1993.

7. *Methods for Measuring the Acute Toxicity of Effluents and Receiving Waters to Freshwater and Marine Organisms*, Fifth Edition, EPA-821-R-02-012, October 2002.

8. *Short-term Methods for Estimating the Chronic Toxicity of Effluents and Receiving Waters to Freshwater Organisms*, Fourth Edition, EPA-821-R-02-013, October 2002.

9. *Technical Support Document for Water Quality-based Toxics Control,* EPA/505/2-90-001, March 1991.

c. **Wastewater Reclamation Evaluation (Special Provision VI.C.2.b.)** This Order allows seasonal use of reclaimed wastewater. These discharges are required to comply with California Water Code sections 13500 – 13577 (Water Reclamation) and Department of Health Services regulations at title 22, Cal. Code of Regs., sections 60301 – 60357 (Water Recycling Criteria).. In order to ensure compliance with applicable regulations, some facilities may need to implement modifications. It is appropriate to provide a reasonable time schedule for the proper evaluation of potential discharges, possible alternatives, and implementation for any necessary modifications.

3. Best Management Practices and Pollution Prevention

a. **Pollution Minimization Plan.** Provision VI.C.3 is included in this Order as required by section 2.4.5 of the SIP. The Regional Water Board included standard provisions in all NPDES permits requiring development of a Pollutant Minimization Program when there is evidence that a toxic pollutant is present in effluent at a concentration greater than an applicable effluent limitation.

4. Construction, Operation, and Maintenance Specifications

Title 40, section 122.41(e) requires proper operation and maintenance of permitted wastewater systems and related facilities to achieve compliance with permit conditions. An up-to-date operation and maintenance manual, as required by Provision VI.C.4.b of the Order, is an integral part of a well-operated and maintained facility.

5. Special Provisions for Municipal Facilities (POTWs Only)

The Regional Water Board includes special provisions in all NPDES Orders for municipal wastewater treatment facilities regarding wastewater collection systems, sanitary sewer overflows, source control, sludge handling and disposal, operator certification, and adequate capacity. These provisions assure efficient and satisfactory operation of municipal wastewater collection and treatment systems.

a. Wastewater Collection System (Provision VI.C.5.a)

(1) Statewide General WDRs for Sanitary Sewer Systems

The State Water Board issued General Waste Discharge Requirements for Sanitary Sewer Systems, Water Quality Order No. 2006-0003-DWQ (General Order) on May 2, 2006. The General Order requires public agencies that own or operate sanitary sewer systems with greater than one mile of pipes or sewer lines to enroll for coverage under the General Order. The General Order requires agencies to develop sanitary sewer management plans (SSMPs) and report all sanitary sewer overflows (SSOs), among other requirements and prohibitions.

Furthermore, the General Order contains requirements for operation and maintenance of collection systems and for reporting and mitigating sanitary sewer overflows. Inasmuch that the Discharger's collection system is part of the system that is subject to this Order, certain standard provisions are applicable as specified in Provisions, section VI.C.5. For instance, the 24-hour reporting requirements in this Order are not included in the General Order. The Discharger must comply with both the General Order and this Order. The Discharger and public agencies that are discharging wastewater into the facility were required to obtain enrollment for regulation under the General Order by December 1, 2006.

All NPDES permits for POTWs currently include federally required standard conditions to mitigate discharges (title 40, section 122.41(d)), to report non-compliance (title 40, section 122.41(1)(6) and (7)), and to properly operate and maintain facilities (title 40, section 122.41(e)). This provision is consistent with these federal requirements.

(2) Sanitary Sewer Overflows.

Order No. 2006-0003-DWQ includes a Reporting Program that requires the Discharger, beginning May 2, 2007, to report SSOs to an online SSO database administered through the California Integrated Water Quality System (CIWQS) and telefax reporting when the online database is not available. The goal of these provisions is to ensure appropriate and

timely responses by the Discharger to sanitary sewer overflows to protect public health and water quality.

The Order also includes reporting provisions (Provision VI.C.5.(a)(2) and Attachment D subsections I.C., I.D., V.E., and V,H.) to ensure adequate and timely notifications are made to the Regional Water Board and appropriate local, state, and federal authorities.

The Order establishes oral reporting limits for SSOs. SSOs less than 100 gallons are not required to be reported orally, while SSOs greater than or equal to 100 gallons must be reported orally to the Regional Water Board. Inevitably, minor amounts of untreated or partially treated wastewater may escape during carefully executed routine operation and maintenance activities. This Order establishes a reasonable minimum volume threshold for oral notifications. It has been the experience of Regional Water Board staff that SSOs to land that are less than 100 gallons are not likely to have a material effect on the environment or public health. Larger volumes in excess of 100 gallons may indicate lack of proper operation and maintenance and due care, and pose more of a threat to the environment or public health. All SSOs, regardless of volume, must be electronically reported pursuant to State Water Board Order No. 2006-0003-DWQ, Statewide General Waste Discharge Requirements for Sanitary Sewer Systems.

b. Source Control Provisions (Provision VI.C.5.b)

Because the average dry weather design flow of the Facility is less than 5.0 mgd, the Order does not require the Discharger to develop a pretreatment program that conforms to federal regulations. However, due to the identification of the reasonable potential for the priority pollutants lead, nickel, zinc, mercury, copper, 2,3,7,8-TCDD, chlorodibromomethane, dichlorobromomethane, bis(2-ethylhexyl)phthalate, alpha-BHC, and heptachlor epoxide, in the discharge, the proposed Order includes requirements for the Discharger to implement a source identification and reduction program. The Discharger's source identification and reduction program will need to address only those pollutants that continue to be detected by levels that trigger reasonable potential.

In addition, the Regional Water Board recognizes that some form of source control is prudent to ensure the efficient operation of the WWTF, the safety of City staff, and to ensure that pollutants do not pass through the treatment facility to impair beneficial uses of the receiving water. The proposed Order includes prohibitions for the discharge of pollutants that may interfere, pass through, or be incompatible with treatment operations, interfere with the use of disposal of sludge, or pose a health hazard to personnel.

c. Sludge Disposal and Handling (Provision VI.C.5.c)

The disposal or reuse of wastewater treatment screenings, sludges, or other solids removed from the liquid waste stream is regulated by title 40, sections 257, 258, 501, and 503, the State Water Board promulgated provisions of title 27, Cal. Code of Regs., Division 2, and with the Water Quality Control Plan for Ocean Waters of California (California Ocean Plan). The Discharger will be required to obtain coverage under State Water Board Water Quality Order No. 2004-0012-DWQ (*General Waste Discharge Requirements for the Discharge of Biosolids to Land as a Soil Amendment in Agricultural, Silvicultural, Horticultural, and Land Reclamation Activities*) or other applicable WDRs issued by the Regional Water Board.

d. Operator Certification (Provision VI.C.5.d)

This provision requires the WWTF to be operated by supervisors and operators who are certified as required by title 23, Cal. Code of Regs., section 3680.

e. Adequate Capacity (Provision VI.C.5.e)

The goal of this provision is to ensure appropriate and timely planning by the Discharger to ensure adequate capacity for the protection of public health and water quality.

f. Statewide General WDRs for Discharge of Biosolids to Land (Provision VI.C.5.f)

This provision requires the Discharger to comply with the State's regulations relating to the discharge of biosolids to the land. The discharge of biosolids through land application is not regulated under this Order.
The Discharger does not currently discharge biosolids to land, but should discharge be necessary, the Discharger will have to comply with this provision.

6. Other Special Provisions - Stormwater

This provision requires the Discharger, if applicable, to comply with the State's regulations relating to industrial stormwater activities. Currently, the Discharge is exempted from these requirements based on a WWTF flow of less than 1.0 mgd.

7. Compliance Schedules

This section does not apply to the City of Ferndale Wastewater Treatment Facility.

VIII. PUBLIC PARTICIPATION

The California Regional Water Quality Control Board, North Coast Region (Regional Water Board) is considering the issuance of waste discharge requirements (WDRs) that will serve as a National Pollutant Discharge Elimination System (NPDES) permit for the City of Ferndale Wastewater Treatment Facility. As a step in the WDR adoption process, the Regional Water Board staff has developed tentative WDRs. The Regional Water Board encourages public participation in the WDR adoption process.

A. Notification of Interested Parties

The Regional Water Board has notified the Discharger and interested agencies and persons of its intent to prescribe waste discharge requirements for the discharge and has provided them with an opportunity to submit their written comments and recommendations. Notification was provided through publication in the Eureka Times-Standard on May 5, 2009 and posting on the Regional Water Board's Internet site http://www.waterboards.ca.gov/northcoast/public_notices/public_hearings/npdes_permits_and_wdrs.shtml on May 6, 2009.

B. Written Comments

The staff determinations are tentative. Interested persons are invited to submit written comments concerning these tentative WDRs. Comments must be submitted either in person or by mail to the Executive Office at the Regional Water Board at the address above on the cover page of this Order.

To be fully responded to by staff and considered by the Regional Water Board, written comments must be received at the Regional Water Board offices by 5:00 p.m. on June 5, 2009.

C. Public Hearing

The Regional Water Board will hold a public hearing on the tentative WDRs during its regular Board meeting on the following date and time and at the following location:

Date: July 23, 2009

Time: 8:30 AM

Location: Regional Water Board Office, Board Hearing Room
5550 Skylane Boulevard, Suite A
Santa Rosa, CA 95403

Interested persons are invited to attend. At the public hearing, the Regional Water Board will hear testimony, if any, pertinent to the discharge, WDRs, and permit. Oral testimony will be heard; however, for accuracy of the record, important testimony should be in writing.

Please be aware that dates and venues may change. Our Web address is http://www.waterboards.ca.gov/northcoast where you can access the current agenda for changes in dates and locations.

D. Waste Discharge Requirements Petitions

Any aggrieved person may petition the State Water Resources Control Board to review the decision of the Regional Water Board regarding the final WDRs. The petition must be submitted within 30 days of the Regional Water Board's action to the following address:

State Water Resources Control Board
Office of Chief Counsel
P.O. Box 100, 1001 I Street
Sacramento, CA 95812-0100

E. Information and Copying

The Report of Waste Discharge (RWD), related documents, tentative effluent limitations and special provisions, comments received, and other information are on file and may be inspected at the address above at any time between 8:30 a.m. and 4:45 p.m., Monday through Friday. Copying of documents may be arranged through the Regional Water Board by calling 707-576-2220.

F. Register of Interested Persons

Any person interested in being placed on the mailing list for information regarding the WDRs and NPDES permit should contact the Regional Water Board, reference this facility, and provide a name, address, and phone number.

G. Additional Information

Requests for additional information or questions regarding this order should be directed to Lisa Bernard at (707) 576-2677 or **lbernard@waterboards.ca.gov**.