California Regional Water Quality Control Board
North Coast Region
Bob Anderson, Chairman

www.waterboards.ca.gov/northcoast

5550 Skylane Boulevard, Suite A, Santa Rosa, California 95403
Phone: (877) 721-9203 (toll free) • Office: (707) 576-2220 • FAX: (707) 523-0135

Linda S. Adams
Secretary for Environmental Protection

Arnold Schwarzenegger
Governor

ORDER NO. R1-2009-0030
NPDES NO. CA0023078
WDID NO. 1B84083OMEN

WASTE DISCHARGE REQUIREMENTS
FOR THE
FORT BRAGG MUNICIPAL IMPROVEMENT DISTRICT NO. 1

The following Discharger is subject to waste discharge requirements as set forth in this Order:

Table 1. Discharger Information

Discharger	Fort Bragg Municipal Improvement District No. 1
Name of Facility	City of Fort Bragg Wastewater Treatment Facility (WWTF)
Facility Address	101 West Cypress Street
	Fort Bragg, CA 95437
	Mendocino County

The U.S. Environmental Protection Agency (USEPA) and the Regional Water Quality Control Board have classified this discharge as a major discharge.

The discharges by the City of Fort Bragg WWTF from the discharge points identified below are subject to waste discharge requirements as set forth in this Order:

Table 2. Discharge Location

Discharge Point	Effluent Description	Discharge Point Latitude	Discharge Point Longitude	Receiving Water
001	Secondary Treated Municipal Wastewater	39º 26’ 20” N	123º 48’ 48” W	Pacific Ocean

Table 3. Administrative Information

This Order was adopted by the Regional Water Quality Control Board on:	June 4, 2009
This Order shall become effective on:	July 24, 2009
This Order shall expire on:	July 24, 2014
The Discharger shall file a Report of Waste Discharge in accordance with title 23, California Code of Regulations, as application for issuance of new waste discharge requirements no later than:	January 24, 2014

DRAFT

IT IS HEREBY ORDERED, that Order No. R1-2005-0096 is rescinded upon the effective date of this Order except for enforcement purposes; and, in order to meet the provisions contained in division 7 of the California Water Code (commencing with section 13000) and regulations adopted thereunder, and the provisions of the federal Clean Water Act (CWA) and regulations and guidelines adopted thereunder, the Discharger shall comply with the requirements in this Order.

I, Catherine Kuhlman, Executive Officer, do hereby certify that this Order with all attachments is a full, true, and correct copy of an Order adopted by the California Regional Water Quality Control Board, North Coast Region, on June 4, 2009.

_____

Catherine Kuhlman, Executive Officer

DRAFT

Table of Contents

I. Facility Information 4
II. Findings 5
III. Discharge Prohibitions 11
IV. Effluent Limitations and Discharge Specifications 11
A. Effluent Limitations – Discharge Point 001 11
B. Land Discharge Specifications 13
C. Reclamation Specifications 13
V. Receiving Water Limitations 13
A. Surface Water Limitations 13
B. Groundwater Limitations 16
VI. Provisions 16
A. Standard Provisions 16
B. Monitoring and Reporting Program (MRP) Requirements 17
C. Special Provisions 17
1. Reopener Provisions 17
2. Special Studies, Technical Reports and Additional Monitoring Requirements 17
3. Best Management Practices and Pollution Prevention 19
4. Construction, Operation and Maintenance Specifications 20
5. Special Provisions for Municipal Facilities (POTWs Only) 21
6. Other Special Provisions 25
7. Compliance Schedules 25
VII. Compliance Determination 25

List of Tables

Table 1. Discharger Information 1
Table 2. Discharge Location 1
Table 3. Administrative Information 1
Table 4. Facility Information 4
Table 5. Basin Plan Beneficial Uses 7
Table 6. Receiving Water Beneficial Uses Established by the Ocean Plan 8
Table 7. Effluent Limitations – Discharge Point 001 12

List of Attachments

Attachment A – Definitions A-1
Attachment B – Map B-1
Attachment C – Flow Schematic C-1
Attachment D – Standard Provisions D-1
Attachment E – Monitoring and Reporting Program (MRP) E-1
Attachment F – Fact Sheet F-1

DRAFT

I. FACILITY INFORMATION

The following Discharger is subject to waste discharge requirements as set forth in this Order:

Table 4. Facility Information

Discharger	Fort Bragg Municipal Improvement District No. 1
Name of Facility	City of Fort Bragg WWTF
Facility Address	101 West Cypress Street
	Fort Bragg, CA 95437
	Mendocino County
Facility Contact, Title, and Phone	Alan Hodge, Treatment Superintendent, (707) 961-2834
Mailing Address	416 North Franklin Street
	Fort Bragg, CA 95437
Type of Facility	Publicly Owned Treatment Works (POTW)
Facility Design Flow	1.0 mgd (average dry weather treatment capacity) 2.2 mgd (average wet weather treatment capacity)

DRAFT

II. FINDINGS

The California Regional Water Quality Control Board, North Coast Region (hereinafter the Regional Water Board), finds:

A. Background. The Fort Bragg Municipal Improvement District No. 1 (hereinafter the Discharger) is currently discharging pursuant to Order No. R1-2005-0096 and National Pollutant Discharge Elimination System (NPDES) Permit No. CA0023078. The Discharger submitted a Report of Waste Discharge, dated September 16, 2008**,** and applied for an NPDES permit renewal to discharge up to 1.0 million gallons per day (mgd) of secondary treated wastewater from the City of Fort Bragg Wastewater Treatment Facility (WWTF). The application was deemed complete on February 9, 2009.

For the purposes of this Order, references to the "discharger" or "permittee" in applicable federal and State laws, regulations, plans, or policy are held to be equivalent to references to the Discharger herein.

B. Facility Description. The Discharger owns and operates the wastewater collection, treatment, and disposal facilities that serve a residential population of approximately 7,000 from the City of Fort Bragg and adjacent unincorporated areas. The treatment facility has a design capacity of 1.0 mgd (average dry weather treatment capacity) and 2.2 mgd (average wet weather treatment capacity). Primary wastewater treatment includes grit removal, screening, and primary clarification. Secondary treatment consists of a two-stage biofiltration (trickling filters) process and clarification with chemical addition to enhance clarification. Secondary treated wastewater is disinfected using a flow-paced chlorine injection system. Dechlorination is accomplished by automatic injection of sulfur dioxide.

Sludge from the primary clarifier is pumped to a gravity thickener and then to two anaerobic digesters. Skimmings from the primary clarifier are directed to an unlined grease lagoon for drying and storage prior to final disposal in a municipal solid waste landfill. Sludge from the secondary clarifier is pumped directly to anaerobic digestion. Digested primary and secondary settled sludge is dewatered to a minimum of fifteen percent solids in a gravity belt press. Additional sludge drying takes place in sludge drying beds prior to disposal or reuse. Since 2005, the dried sludge has been hauled off-site to the Redwood Landfill in Novato.

Treated wastewater is currently discharged at Discharge Point 001 to the Pacific Ocean, via a 650-foot outfall, west of the treatment plant. The receiving water is located within the Mendocino Coast Hydrologic Unit and is a water of the United States.

Attachment B provides a map of the area around the facility. Attachment C provides a flow schematic of the facility.

C. Legal Authorities. This Order is issued pursuant to section 402 of the federal Clean Water Act (CWA) and implementing regulations adopted by the USEPA and chapter 5.5, division 7 of the California Water Code (commencing with section 13370). It shall serve as

DRAFT

an NPDES permit for point source discharges from this facility to surface waters. This Order also serves as Waste Discharge Requirements (WDRs) pursuant to article 4, chapter 4, division 7 of the Water Code (commencing with section 13260).

D. Background and Rationale for Requirements. The Regional Water Board developed the requirements in this Order based on information submitted as part of the application, through monitoring and reporting programs, and other available information. The Fact Sheet (Attachment F), which contains background information and rationale for Order requirements, is hereby incorporated into this Order and constitutes part of the Findings for this Order. Attachments A through E are also incorporated into this Order.

E. California Environmental Quality Act (CEQA). Under Water Code section 13389, this action to adopt an NPDES permit is exempt from the provisions of CEQA, Public Resources Code sections 21100 - 21177.

F. Technology-Based Effluent Limitations. Section 301(b) of the CWA and implementing USEPA permit regulations at section 122.44, title 40 of the Code of Federal Regulations[1], require that permits include conditions meeting applicable technology-based requirements at a minimum, and any more stringent effluent limitations necessary to meet applicable water quality standards. Discharges to surface waters authorized by this Order must meet minimum federal technology-based requirements based on Secondary Treatment Standards at Part 133 and/or Best Professional Judgment (BPJ) in accordance with Part 125, section 125.3 and technology-based limits set in Table A of the Ocean Plan. A detailed discussion of the technology-based effluent limitations development is included in the Fact Sheet.

G. Water Quality-Based Effluent Limitations. Section 301(b) of the CWA and section 122.44(d) require that permits include limitations more stringent than applicable federal technology-based requirements where necessary to achieve applicable water quality standards.

Section 122.44(d)(1)(i) mandates that permits include effluent limitations for all pollutants that are or may be discharged at levels that have the reasonable potential to cause or contribute to an exceedance of a water quality standard, including numeric and narrative objectives within a standard. Where reasonable potential has been established for a pollutant, but there is no numeric criterion or objective for the pollutant, water quality-based effluent limitations (WQBELs) must be established using: (1) USEPA criteria guidance under CWA section 304(a), supplemented where necessary by other relevant information; (2) an indicator parameter for the pollutant of concern; or (3) a calculated numeric water quality criterion, such as a proposed state criterion or policy interpreting the state's narrative criterion, supplemented with other relevant information, as provided in section 122.44(d)(1)(vi). This permit contains water quality-based effluent limits for total residual chlorine, copper, zinc and total coliform bacteria.

[1] All further statutory references are to title 40 of the Code of Federal Regulations unless otherwise indicated.

H. Water Quality Control Plans. The Regional Water Board adopted a *Water Quality Control Plan for the North Coast Region* (hereinafter Basin Plan) that designates beneficial uses, establishes water quality objectives, and contains implementation programs and policies to achieve those objectives for the Pacific Ocean and other receiving waters addressed through the plan. In addition, the Basin Plan implements State Water Resources Control Board (State Water Board) Resolution No. 88-63, which established State policy that all waters, with certain exceptions, should be considered suitable or potentially suitable for municipal or domestic supply. With total dissolved solids concentrations much greater than 3,000 mg/L, ocean waters meet an exception to State Water Board Resolution No. 88-63; and therefore, the "municipal or domestic supply" designation is not applicable to the ocean receiving water for this Discharger. Beneficial uses applicable to receiving waters from the City of Fort Bragg WWTF are described in Table 5, below.

Table 5. Basin Plan Beneficial Uses

Discharge Point	Receiving Water	Beneficial Use(s)
001	Pacific Ocean	Existing: • Navigation (NAV) • Water Contact Recreation (REC-1) • Non-Contact Water Recreation (REC-2) • Commercial and Sport Fishing (COMM) • Wildlife Habitat (WILD) • Rare, Threatened or Endangered Species (RARE) • Migration of Aquatic Organisms (MIGR) • Spawning, Reproduction, and/or Early Development (SPWN) • Shellfish Harvesting (SHELL) • Marine Habitat (MAR) • Aquaculture (AQUA) Potential: • Industrial Service Supply (IND) • Industrial Process Supply (PRO) • Area of Special Biological Significance (ASBS)

Requirements of this Order implement the Basin Plan.

The State Water Board adopted the *Water Quality Control Plan for Control of Temperature in the Coastal and Interstate Water and Enclosed Bays and Estuaries of California* (Thermal Plan) on May 18, 1972, and amended this plan on September 18, 1975. This

DRAFT

plan contains temperature objectives for coastal waters. Requirements of this Order implement the Thermal Plan.

I. **California Ocean Plan**. The State Water Board adopted the *Water Quality Control Plan for Ocean Waters of California*, California Ocean Plan (Ocean Plan) in 1972 and amended it in 1978, 1983, 1988, 1990, 1997, 2000, and 2005. The State Water Board adopted the latest amendment on April 21, 2005 and it became effective on February 14, 2006. The Ocean Plan is applicable, in its entirety, to point source discharges to the Pacific Ocean. The Ocean Plan identifies the beneficial uses of ocean waters of the State to be protected as summarized below:

Table 6. Receiving Water Beneficial Uses Established by the Ocean Plan

Discharge Point	Receiving Water	Beneficial Uses
001	Pacific Ocean	**Existing:** NAV - Navigation REC1 - Water Contact Recreation REC2 - Non-Contact Water Recreation COMM - Commercial and Sport Fishing MAR - Marine Habitat WILD - Wildlife Habitat RARE - Preservation of Rare, Threatened, or Endangered Species MIGR - Migration of Aquatic Organisms SPWN - Spawning, Reproduction, and/or Early Development SHELL - Shellfish Harvesting AQUA – Aquaculture **Potential:** IND – Industrial Service Supply PRO – Industrial Process Supply ASBS – Preservation of Areas of Special Biological Significance

In order to protect the beneficial uses, the Ocean Plan establishes water quality objectives and a program of implementation. Requirements of this Order implement the Ocean Plan.

J. **Alaska Rule.** On March 30, 2000, USEPA revised its regulation that specifies when new and revised state and tribal water quality standards (WQS) become effective for CWA purposes (40 C.F.R. § 131.21; 65 Fed. Reg. 24641 (April 27, 2000).) Under the revised regulation (also known as the Alaska Rule), new and revised standards submitted to USEPA after May 30, 2000, must be approved by USEPA before being used for CWA purposes. The final rule also provides that standards already in effect and submitted to

DRAFT

USEPA by May 30, 2000 may be used for CWA purposes, whether or not approved by USEPA.

K. **Stringency of Requirements for Individual Pollutants.** This Order contains both technology-based and water quality-based effluent limitations for individual pollutants. The technology-based effluent limitations consist of restrictions on biochemical oxygen demand, 5-day at 20°C (BOD_5), total suspended solids (TSS), percent removal for BOD_5 and TSS, pH, settleable solids, oil and grease, and turbidity are discussed in Section IV.B of the Fact Sheet. This Order's technology-based pollutant restrictions implement the minimum, applicable federal technology-based requirements based on secondary treatment and Table A of the Ocean Plan. In addition, this Order contains effluent limitations more stringent than the minimum, federal technology-based requirements that are necessary to meet water quality standards. These limitations are not more stringent than required by the CWA.

Water quality-based effluent limitations for total residual chlorine, copper, zinc and total coliform bacteria have been scientifically derived to implement water quality objectives that protect beneficial uses. Both the beneficial uses and the water quality objectives have been approved pursuant to federal law and are the applicable federal water quality standards. The scientific procedures for calculating the individual water quality-based effluent limitations are based on the Ocean Plan, which was approved by USEPA on February 14, 2006. All beneficial uses and water quality objectives contained in the Basin Plan were approved under state law and submitted to and approved by USEPA prior to May 30, 2000. Any water quality objectives and beneficial uses submitted to USEPA prior to May 30, 2000, but not approved by USEPA before that date, are nonetheless "applicable water quality standards for purposes of the CWA" pursuant to section 131.21(c)(1). Collectively, this Order's restrictions on individual pollutants are no more stringent than required to implement the requirements of the CWA.

L. **Antidegradation Policy.** Section 131.12 requires that the state water quality standards include an antidegradation policy consistent with the federal policy. The State Water Board established California's antidegradation policy in State Water Board Resolution No. 68-16. Resolution No. 68-16 incorporates the federal antidegradation policy where the federal policy applies under federal law. Resolution No. 68-16 requires that existing quality of waters be maintained unless degradation is justified based on specific findings. The Regional Water Board's Basin Plan implements, and incorporates by reference, both the state and federal antidegradation policies. As discussed in detail in the Fact Sheet the permitted discharge is consistent with the antidegradation provisions of section 131.12 and State Water Board Resolution No. 68-16.

M. **Anti-Backsliding Requirements.** Sections 402(o)(2) and 303(d)(4) of the CWA and federal regulations at title 40, Code of Federal Regulations section 122.44(l) prohibit backsliding in NPDES permits. These anti-backsliding provisions require effluent limitations in a reissued permit to be as stringent as those in the previous permit, with

DRAFT

some exceptions where limitations may be relaxed. All effluent limitations in this Order are at least as stringent as the effluent limitations in the previous Order.

N. **Endangered Species Act.** This Order does not authorize any act that can result in the taking of a threatened or endangered species or any act that is now prohibited, or becomes prohibited in the future, under either the California Endangered Species Act (Fish and Game Code sections 2050 to 2097) or the Federal Endangered Species Act (16 U.S.C.A. sections 1531 to 1544). This order requires compliance with effluent limits, receiving water limits, and other requirements to protect the beneficial uses of waters of the state. The discharger is responsible for meeting all requirements of the applicable Endangered Species Act.

O. **Monitoring and Reporting.** Section 122.48 requires that all NPDES permits specify requirements for recording and reporting monitoring results. Water Code sections 13267 and 13383 authorize the Regional Water Board to require technical and monitoring reports. The Monitoring and Reporting Program establishes monitoring and reporting requirements to implement federal and State requirements. This Monitoring and Reporting Program is provided in Attachment E.

P. **Standard and Special Provisions.** Standard Provisions, which apply to all NPDES permits in accordance with section 122.41, and additional conditions applicable to specified categories of permits in accordance with section 122.42, are provided in Attachment D. The Regional Water Board has also included in this Order special provisions applicable to the Discharger. A rationale for the special provisions contained in this Order is provided in the attached Fact Sheet.

Q. **Provisions and Requirements Implementing State Law.** The provisions/requirements in subsections IV. B and C, of this Order are included to implement state law only. These provisions/requirements are not required or authorized under the federal CWA; consequently, violations of these provisions/requirements are not subject to the enforcement remedies that are available for NPDES violations.

R. **Notification of Interested Parties.** The Regional Water Board has notified the Discharger and interested agencies and persons of its intent to prescribe Waste Discharge Requirements for the discharge and has provided them with an opportunity to submit their written comments and recommendations. Details of notification are provided in the Fact Sheet of this Order.

S. **Consideration of Public Comment.** The Regional Water Board, in a public meeting, heard and considered all comments pertaining to the discharge. Details of the Public Hearing are provided in the Fact Sheet of this Order.

THEREFORE, IT IS HEREBY ORDERED, that this Order supercedes Order No. R1-2005-0096 except for enforcement purposes, and, in order to meet the provisions contained in division 7 of the Water Code (commencing with section 13000) and regulations adopted thereunder, and the provisions of the federal Clean Water Act (CWA) and regulations and

DRAFT

guidelines adopted thereunder, the Discharger shall comply with the requirements in this Order.

III. DISCHARGE PROHIBITIONS

A. The discharge of any waste not disclosed by the Discharger or within the reasonable contemplation of the Regional Water Board is prohibited.

B. Creation of pollution, contamination, or nuisance, as defined by Section 13050 of the California Water Code is prohibited. [Health and Safety Code, Section 5411]

C. The discharge of sludge or digester supernatant is prohibited, except as authorized under Section VI. C. 5. c (Solids Disposal and Handling).

D. The discharge of untreated waste or partially treated waste from anywhere within the collection, treatment, or disposal facility, except as provided for bypasses under the conditions in Standard Provisions, Section D of this Order, is prohibited.

E. The discharge of waste to land that is not under the control of the Discharger is prohibited, except as authorized under Section VI. C. 5. c (Solids Disposal and Handling).

F. The mean daily dry weather flow to the City of Fort Bragg WWTF in excess of 1.0 mgd measured over a period of 30 consecutive days is prohibited.

G. The discharge of any radiological, chemical, or biological warfare agent or high-level radioactive waste into the ocean is prohibited.

H. The discharge of sludge directly into the ocean or into a waste stream that discharges to the ocean is prohibited.

IV. EFFLUENT LIMITATIONS AND DISCHARGE SPECIFICATIONS

A. Effluent Limitations – Discharge Point 001

1. Final Effluent Limitations – Discharge Point 001

   a. The Discharger shall maintain compliance with the following effluent limitations at Discharge Point 001, with compliance measured at Monitoring Location EFF-001 as described in the attached Monitoring and Reporting Program (MRP).

DRAFT

Table 7. Effluent Limitations – Discharge Point 001

Parameter	Units	Effluent Limitations				
		Average Monthly	Average Weekly	Maximum Daily	Instantaneous Maximum	6-Month Median
BOD_5	mg/L	30	45	---	---	---
	lbs/day[2]	250	375	---	---	---
	lbs/day[3]	550	825	---	---	---
TSS	mg/L	30	45	---	---	---
	lbs/day[2]	250	375	---	---	---
	lbs/day[3]	550	825	---	---	---
Settleable Solids	mL/L-hr	1.0	1.5	3.0	---	---
pH	s.u.	Not less than 6.0 nor greater than 9.0				
Oil and Grease	mg/L	25	40	75	---	---
Turbidity	NTU	75	100	225	---	---
Total Residual Chlorine	µg/L	---	---	408	3,060	102
	lbs/day[2]			3.40	25.5	0.85
	lbs/day[3]			7.49	56.1	1.87
Copper	µg/L	---	---	512	1,430	53
	lbs/day[2]	---	---	4.27	11.9	0.44
	lbs/day[3]			9.39	26.2	0.97
Zinc	µg/L	---	---	3,680	9,800	620
	lbs/day[2]			30.7	81.7	5.17
	lbs/day[3]	---	---	67.5	178	11.4

b. **Percent Removal.** The average monthly percent removal of BOD_5 and TSS shall not be less than 85 percent. Percent removal shall be determined by comparing the average monthly influent concentration to the average monthly effluent concentration for the same constituent over the same time period, as measured at Monitoring Locations INF-001 and EFF-001.

c. **Total Coliform Bacteria.** The disinfected effluent shall not contain concentrations of total coliform bacteria exceeding the following limitations:

   i. The monthly median concentration shall not exceed a Most Probable Number (MPN) of 70 per 100 milliliters, using bacteriological results from the calendar month for which analyses have been completed.

[2] Mass-based limitations are based on the average dry weather design flow of the WWTF of 1.0 mgd.
[3] These alternate mass-based limitations apply during periods of high infiltration/inflow when influent flow to the WWTF exceed 1.0 mgd for the limitation period (weekly, or monthly), and are based on the secondary wet weather treatment capacity of the WWTF (2.2 mgd).

DRAFT

ii. No more than 10 percent of the samples shall exceed an MPN of 230 per 100 milliliters, using bacteriological results from ten consecutive samples.

2. Interim Effluent Limitations

Not applicable.

B. Land Discharge Specifications

Not applicable.

C. Reclamation Specifications

Not Applicable

V. RECEIVING WATER LIMITATIONS

A. Surface Water Limitations

The following receiving water limitations are based on water quality objectives established by the Ocean Plan and are a required part of this Order. The discharge of waste shall not cause the following water quality objectives to be violated upon completion of initial dilution.

Ocean Plan

1. Bacterial Characteristics

a. Body Contact Standards

Within a zone bounded by the shoreline and a distance of 1,000 feet from the shoreline or the 30-foot depth contour, whichever is further from the shoreline, and in areas outside this zone designated for water contact recreation use by the Regional Water Board, but including all kelp beds, the following bacteriological objectives shall be maintained throughout the water column.

30-Day Geometric Mean – The following standards are based on the geometric mean of the five most recent samples from each receiving water monitoring location:

i. Total coliform density shall not exceed 1,000 per 100 ml;

ii. Fecal coliform density shall not exceed 200 per 100 mL; and

iii. Enterococcus density shall not exceed 35 per 100 mL.

Single Sample maximum:

DRAFT

i. Total coliform density shall not exceed 10,000 per 100 ml;

ii. Fecal coliform density shall not exceed 400 per 100 mL;

iii. Enterococcus density shall not exceed 104 per 100 mL; and

iv. Total coliform density shall not exceed 1,000 per 100 mL when the fecal coliform to total coliform ratio exceeds 0.1.

b. Shellfish Harvesting

At all areas where shellfish may be harvested for human consumption, as determined by the Regional Water Board, the following bacteriological objectives shall be maintained throughout the water column:

i. The median total coliform density shall not exceed 70 organisms per 100 mL, and in not more than 10 percent of samples shall coliform density exceed 230 organisms per 100 mL.

2. Physical Characteristics

a. Floating particulates and grease and oil shall not be visible.

b. The discharge of waste shall not cause aesthetically undesirable discoloration of the ocean surface.

c. Natural light shall not be significantly reduced at any point outside the initial dilution zone as the result of the discharge of waste.

d. The rate of deposition of inert solids and the characteristics of inert solids in ocean sediments shall not be changed such that benthic communities are degraded.

3. Chemical Characteristics

a. The dissolved oxygen concentration shall not at any time be depressed more than 10 percent from that which occurs naturally as a result of the discharge of oxygen demanding waste material.

b. The pH shall not be changed at any time more than 0.2 units from that which occurs naturally.

c. The dissolved sulfide concentration of waters in and near sediments shall not be significantly increased above that present under natural conditions.

d. The concentration of substances set forth in Chapter II, Table B of the Ocean Plan in marine sediments shall not be increased to levels that would degrade indigenous biota.

e. The concentration of organic materials in marine sediments shall not be increased to levels that would degrade marine life.

DRAFT

f. Nutrient levels shall not cause objectionable aquatic growths or degrade indigenous biota.

g. Discharges shall not cause exceedances of water quality objectives for ocean waters of the State established in Table B of the Ocean Plan.

h. Discharge of radioactive waste shall not degrade marine life.

4. Biological Characteristics

a. Marine communities, including vertebrate, invertebrate and plant species, shall not be degraded.

b. The natural taste, odor, and color of fish, shellfish, or other marine resources used for human consumption shall not be altered.

c. The concentration of organic materials in fish, shellfish, or other marine resources used for human consumption shall not bioaccumulate to levels that are harmful to human health.

5. General Standards

a. The discharge shall not cause a violation of any applicable water quality standard for the receiving waters adopted by the Regional Water Board or the State Water Board as required by the Clean Water Act and regulations adopted thereunder.

b. The discharge shall be essentially free of:

i. Material that is floatable or will become floatable upon discharge.

ii. Settleable material or substances that may form sediments that will degrade benthic communities or other aquatic life.

iii. Substances that will accumulate to toxic levels in marine waters, sediments or biota.

iv. Substances that significantly decrease natural light to benthic communities and other marine life.

v. Material that results in aesthetically undesirable discoloration of the ocean surface.

c. Waste effluent shall be discharged in a manner that provides sufficient initial dilution to minimize the concentrations of substances not removed in the treatment.

d. Location of waste discharges must be determined after a detailed assessment of the oceanographic characteristics and current patterns to assure that:

DRAFT

i. Pathogenic organisms and viruses are not present in areas where shellfish are harvested for human consumption or in areas used for swimming or other body contact sports.

ii. Natural water quality conditions are not altered in areas designated as being of special biological significance.

iii. Maximum protection is provided to the marine environment.

iv. The discharge does not adversely affect recreational beneficial uses such as surfing and beach walking.

B. Groundwater Limitations

Not Applicable. The Discharger has not sought a permit for any discharges to ground water.

VI. PROVISIONS

A. Standard Provisions

1. **Federal Standard Provisions.** The Discharger shall comply with all Standard Provisions included in Attachment D of this Order.

2. **Regional Water Board Standard Provisions.** The Discharger shall comply with the following provisions.

   a. Failure to comply with provisions or requirements of this Order, or violation of other applicable laws or regulations governing discharges from this facility, may subject the Discharger to administrative or civil liabilities, criminal penalties, and/or other enforcement remedies to ensure compliance. Additionally, certain violations may subject the Discharger to civil or criminal enforcement from appropriate local, state, or federal law enforcement entities.

   b. In the event the Discharger does not comply or will be unable to comply for any reason, with any prohibition, interim or final effluent limitation, land discharge specification, reclamation specification, receiving water limitation, or provision of this Order that may result in a significant threat to human health or the environment, such as inundation of treatment components, breach of pond containment, sanitary sewer overflow, irrigation runoff, etc., that results in a discharge to a drainage channel or a surface water, the Discharger shall as soon as possible, but no later than two (2) hours after becoming aware of the discharge, orally[4] notify the State Office of Emergency Services, the local health

[4] Oral reporting means direct contact with a Regional Water Board staff person. The oral report may be given in person or by telephone. After business hours, oral contact must be made by calling the State Office of Emergency Services at (800) 852-7550 or Regional Water Board spill officer at (707) 576-2220.

DRAFT

officer or directors of environmental health with jurisdiction over the affected water bodies, and the Regional Water Board.

c. As soon as possible, but no later than twenty-four (24) hours after becoming aware of a discharge to a drainage channel or a surface water, the Discharger shall submit to the Regional Water Board a written certification that the State Office of Emergency Services and the local health officer or directors of environmental health with jurisdiction over the affected water body have been notified of the discharge. Written documentation of the circumstances of the spill event shall be submitted to the Regional Water Board within five (5) days, unless the Regional Water Board waives the confirmation. The written notification shall state the nature, time, duration, and cause of noncompliance, and shall describe the measures being taken to remedy the current noncompliance and to prevent recurrence, including, where applicable, a schedule of implementation. Other types of noncompliance require written notification, as described above, at the time of the normal monitoring report.

B. Monitoring and Reporting Program (MRP) Requirements

The Discharger shall comply with the MRP, and future revisions thereto, in Attachment E of this Order.

C. Special Provisions

1. Reopener Provisions

a. **Standard Revisions.** If applicable water quality standards are promulgated or approved pursuant to Section 303 of the CWA, or amendments thereto, the Regional Water Board may reopen this Order and make modifications in accordance with such revised standards.

b. **Reasonable Potential.** This Order may be reopened for modification to include an effluent limitation if monitoring establishes that the discharge causes, has the reasonable potential to cause, or contributes to an excursion above an Ocean Plan Table B water quality objective.

c. **Whole Effluent Toxicity**. As a result of a Toxicity Reduction Evaluation (TRE), this Order may be reopened to include a limitation for a specific toxicant identified in the TRE.

2. Special Studies, Technical Reports and Additional Monitoring Requirements

a. **Toxicity Reduction Requirements**

(1) **Whole Effluent Toxicity.** The Monitoring and Reporting Program (MRP) of this Order requires routine monitoring for chronic toxicity at Discharge Point

DRAFT

001 to determine compliance with the Ocean Plan's water quality objectives for chronic toxicity. As established by the MRP, if chronic toxicity is measured above the water quality objective of 51 TUc in the effluent, the Discharger shall conduct accelerated monitoring as specified in section V. of the MRP.

Results of accelerated toxicity monitoring will indicate a need to conduct a Toxicity Reduction Evaluation (TRE), if toxicity persists; or it will indicate that a return to routine toxicity monitoring is justified because persistent toxicity has not been identified by accelerated monitoring. TREs shall be conducted in accordance with the TRE Workplan prepared by the Discharger pursuant to Section VI.C.2.a. (2) of this Order, below.

(2) Toxicity Reduction Evaluations (TRE) Workplan. The Discharger shall prepare and submit to the Regional Water Board Executive Officer a TRE Workplan within 180 days of the effective date of this Order (**December 4, 2009**). This plan shall be reviewed and updated as necessary in order to remain current and applicable to the discharge and discharge facilities. The Workplan shall describe the steps the Discharger intends to follow if toxicity is detected above effluent limitations, and should include at least the following items:

(a) A description of the investigation and evaluation techniques that would be used to identify potential causes and sources of toxicity, effluent variability, and treatment system efficiency.

(b) A description of the facility's methods of maximizing in house treatment efficiency and good housekeeping practices.

(c) If a toxicity identification evaluation (TIE) is necessary, an indication of the person who would conduct the TIEs (i.e., an in house expert or an outside contractor).

(3) Toxicity Reduction Evaluations (TRE). The TRE shall be conducted in accordance with the following:

(a) The TRE shall be initiated within 30 days of the date of completion of the accelerated monitoring test, required by Section V of the MRP, observed to exceed either the acute or chronic toxicity parameter.

(b) The TRE shall be conducted in accordance with the Discharger's Workplan.

(c) The TRE shall be in accordance with current technical guidance and reference material including, at a minimum, the USEPA manual EPA/833B 99/002.

(d) The TRE may end at any stage if, through monitoring results, it is determined that there is no longer consistent toxicity.

DRAFT

(e) The Discharger may initiate a TIE as part of the TRE process to identify the cause(s) of toxicity. As guidance, the Discharger shall use the USEPA acute and chronic manuals, EPA/600/6-91/005F (Phase I), EPA/600/R-92/080 (Phase II), and EPA-600/R-92/081 (Phase III).

(f) As toxic substances are identified or characterized, the Discharger shall continue the TRE by determining the source(s) and evaluating alternative strategies for reducing or eliminating the substances from the discharge. All reasonable steps shall be taken to reduce toxicity to levels consistent with acute and chronic toxicity parameters.

(g) Many recommended TRE elements accompany required efforts of source control, pollution prevention, and storm water control programs. TRE efforts should be coordinated with such efforts. To prevent duplication of efforts, evidence of complying with requirements of recommendations of such programs may be acceptable to comply with requirements of the TRE.

(h) The Regional Water Board recognizes that chronic toxicity may be episodic and identification of a reduction of sources of chronic toxicity may not be successful in all cases. Consideration of enforcement action by the Regional Water Board will be based in part on the Discharger's actions and efforts to identify and control or reduce sources of consistent toxicity.

3. Best Management Practices and Pollution Prevention

a. **Pollutant Minimization Program (PMP)**

The Discharger shall develop and conduct a PMP as further described below when there is evidence (e.g., sample results reported as DNQ when the effluent limitation is less than the MDL, sample results from analytical methods more sensitive than those methods required by this Order, presence of whole effluent toxicity, health advisories for fish consumption, results of benthic or aquatic organism tissue sampling) that a pollutant is present in the effluent above an effluent limitation and either:

i. The concentration of the pollutant is reported as DNQ and the effluent limitation is less than the reported ML;

ii. The concentration of the pollutant is reported as ND and the effluent limitation is less than the MDL, using definitions described in Attachment A and reporting protocols described in MRP section X.B.4.

The PMP shall include, but not be limited to, the following actions and submittals acceptable to the Regional Water Board:

DRAFT

i. An annual review and semi-annual monitoring of potential sources of the reportable pollutant(s), which may include fish tissue monitoring and other bio-uptake sampling;

ii. Quarterly monitoring for the reportable pollutant(s) in the influent to the wastewater treatment system;

iii. Submittal of a control strategy designed to proceed toward the goal of maintaining concentrations of the reportable pollutant(s) in the effluent at or below the effluent limitation;

iv. Implementation of appropriate cost-effective control measures for the reportable pollutant(s), consistent with the control strategy; and

v. An annual status report that shall be sent to the Regional Water Board including:

(a) All PMP monitoring results for the previous year;

(b) A list of potential sources of the reportable pollutant(s);

(c) A summary of all actions undertaken pursuant to the control strategy; and

(d) A description of actions to be taken in the following year.

4. Construction, Operation and Maintenance Specifications

a. The Discharger shall at all times properly operate and maintain all facilities and systems of treatment and control (and related appurtenances) that are installed or used by the Discharger to achieve compliance with this Order. Proper operation and maintenance includes adequate laboratory quality control and appropriate quality assurance procedures. This provision requires the operation of backup or auxiliary facilities or similar systems that are installed by the Discharger only when necessary to achieve compliance with the conditions of this Order. [40 CFR 122.41(e)]

b. The Discharger shall maintain an updated Operation and Maintenance (O&M) Manual for the Facility. The Discharger shall update the O&M Manual, as necessary, to conform with changes in operation and maintenance of the Facility. The O&M Manual shall be readily available to operating personnel onsite. The O&M Manual shall include the following:

i. Description of the treatment plant table of organization showing the number of employees, duties and qualifications and plant attendance schedules (daily, weekends and holidays, part-time, etc). The description should include documentation that the personnel are knowledgeable and qualified to operate

DRAFT

the treatment facility so as to achieve the required level of treatment at all times.

ii. Detailed description of safe and effective operation and maintenance of treatment processes, process control instrumentation and equipment.

iii. Description of laboratory and quality assurance procedures.

iv. Process and equipment inspection and maintenance schedules.

v. Description of safeguards to assure that, should there be reduction, loss, or failure of electric power, the Discharger will be able to comply with requirements of this Order.

vi. Description of preventive (fail-safe) and contingency (response and cleanup) plans for controlling accidental discharges, and for minimizing the effect of such events. These plans shall identify the possible sources (such as loading and storage areas, power outage, waste treatment unit failure, process equipment failure, tank and piping failure) of accidental discharges, untreated or partially treated waste bypass, and polluted drainage.

5. Special Provisions for Municipal Facilities (POTWs Only)

a. Wastewater Collection Systems

(1) Statewide General WDRs for Sanitary Sewer Systems

On May 2, 2006, the State Water Board adopted State Water Board Order No. 2006-003-DWQ, Statewide General WDRs for Sanitary Sewer Systems. Order No. 2006-0003-DWQ requires that all public agencies that currently own or operate sanitary sewer systems apply for coverage under the General WDRs. The deadline for dischargers to apply for coverage under State Water Board Order No. 2006-003-DWQ was November 6, 2006. The Discharger shall maintain coverage under, and shall be subject to the requirements of Order No. 2006-0003-DWQ and any future revisions thereto for operation of its wastewater collection system.

In addition to the coverage obtained under Order No. 2006-0003, the Discharger's collection system is part of the treatment system that is subject to this Order. As such, pursuant to federal regulations, the Discharger must properly operate and maintain its collection system [40 CFR 122.41(e)], report any non-compliance [40 CFR 122.41(l)(6) and (7)], and mitigate any discharge from the collection system in violation of this Order [40 CFR 122.41(d)].

DRAFT

(2) Sanitary Sewer Overflows

Sanitary sewer overflows (SSOs) shall be reported orally[5] to the Regional Water Board staff in accordance with the following:

(a) SSOs in excess of 1,000 gallons or any SSO that results in sewage reaching surface waters, or if it is likely that more than 1,000 gallons has escaped the collection system, shall be reported immediately by telephone. A written description of the event shall be submitted in conjunction with the monthly monitoring report.

(b) SSOs that result in a sewage spill between 100 gallons and 1,000 gallons that do not reach a surface waterway shall be reported orally within 24 hours. A written description of the event shall be submitted with the next monthly monitoring report.

(c) Information to be provided orally includes:

i. Name and contact information of caller.
ii. Date, time and location of SSO occurrence.
iii. Estimates of spill volume, rate of flow, and spill duration.
iv. Surface water bodies impacted.
v. Cause of spill.
vi. Cleanup actions taken or repairs made.
vii. Responding agencies.

b. Source Control Provisions

The Discharger shall perform source control functions and provide a summary of source control activities conducted in the Annual WWTF Report (due **February 1st** to the Regional Water Board). Source Control functions shall include the following.

(1) Implement the necessary legal authorities to monitor and enforce source control standards, restrict discharges of toxic materials to the collection system and inspect facilities connected to the system.

[5] Oral reporting means direct contact with a Regional Water Board staff person. The oral report may be given in person or by telephone. After business hours, oral contact must be made by calling the State Office of Emergency Services at (800) 852-7550 or the Regional Water Board spill officer at (707) 576-2752.

(2) If waste haulers are allowed to discharge to the Facility, establish a waste hauler permit system, to be reviewed by the Executive Officer, to regulate waste haulers discharging to the collection system or Facility.

(3) Conduct a waste survey at least **every five years** to identify all dischargers that might discharge pollutants that could pass through or interfere with the operation or performance of the Facility.

(4) Perform public outreach to educate industrial, commercial, and residential users about the importance of preventing discharges of industrial and toxic wastes to the wastewater treatment plant.

(5) Perform ongoing inspections and monitoring, as necessary, to ensure adequate source control.

c. Sludge Disposal and Handling Requirements

(1) Sludge, as used in this Order, means the solid, semisolid, and liquid residues removed during primary, secondary, or advanced wastewater treatment processes. Solid waste refers to grit and screenings generated during preliminary treatment. Biosolids refers to sludge that has been treated, tested, and demonstrated to be capable of being beneficially and legally used pursuant to federal and State regulations as a soil amendment for agriculture, silviculture, horticulture, and land reclamation activities.

(2) All collected sludges and other solid waste removed from liquid wastes shall be removed from screens, sumps, ponds, and tanks as needed to ensure optimal plant operation and disposed of in accordance with applicable federal and State regulations.

(3) The use and disposal of biosolids shall comply with all the requirements in 40 CFR 503, which are enforceable by the USEPA, not the Regional Water Board. If during the life of this Order, the State accepts primacy for implementation of 40 CFR 503, the Regional Water Board may also initiate enforcement where appropriate.

(4) Sludge or biosolids that are disposed of in a municipal solid waste landfill or used as daily landfill cover shall meet the applicable requirements of 40 CFR 258. In the annual self-monitoring report, the Discharger shall report the amount of sludge placed in a landfill and the landfill(s) which received the sludge or biosolids.

(5) The beneficial use of biosolids by application to land as soil amendment is not covered or authorized by this Order. Class B biosolids that are applied to land as soil amendment by the Discharger within the North Coast Region shall comply with State Water Board Water Quality Order No. 2004-0012-DWQ (General Waste Discharge Requirements for the Discharge of Biosolids to Land as a Soil Amendment in Agricultural, Silvicultural, Horticultural, and

DRAFT

Land Reclamation Activities) or other WDRs issued by the Regional Water Board.

(6) The Discharger shall take all reasonable steps to prevent and minimize any sludge use or disposal in violation of this Order that has a likelihood of adversely affected human health or the environment.

(7) Solids and sludge treatment, storage, and disposal or reuse shall not create a nuisance, such as objectionable odors or flies, and shall not result in groundwater contamination.

(8) Solids and sludge treatment and storage sites shall have facilities adequate to divert surface water runoff from adjacent areas, to protect the boundaries of the site from erosion, and to prevent drainage from the treatment and storage site. Adequate protection is defined as protection from at least a 100-year storm.

(9) The discharge of sewage sludge and solids shall not cause waste material to be in a position where it is, or can be, conveyed from the treatment and storage sites and deposited in the waters of the State.

d. Operator Certification

Supervisors and operators of municipal wastewater treatment plants shall possess a certificate of appropriate grade in accordance with Title 23, CCR, section 3680. The State Water Board may accept experience in lieu of qualification training. In lieu of a properly certified WWTP operator, the State Water Board may approve use of a water treatment plant operator of appropriate grade certified by the State Department of Public Health where water reclamation is involved.

e. Adequate Capacity

Whenever a WWTP will reach capacity within four years, the Discharger shall notify the Regional Water Board. A copy of such notification shall be sent to appropriate local elected officials, local permitting agencies, and the press. Factors to be evaluated in assessing reserve capacity shall include, at a minimum, (1) comparison of the wet weather design flow with the highest daily flow, and (2) comparison of the average dry weather design flow with the lowest 30-day flow. The Discharger shall demonstrate that adequate steps are being taken to address the capacity problem. The Discharger shall submit a technical report to the Regional Water Board showing how flow volumes will be prevented from exceeding capacity, or how capacity will be increased, within 120 days after providing notification to the Regional Water Board, or within 120 days after receipt of Regional Water Board notification, that the WWTP will reach capacity within four years. The time for filing the required technical report may be extended by the Regional Water Board. An extension of 30 days may be granted

DRAFT

by the Executive Officer, and longer extensions may be granted by the Regional Water Board itself. [CCR Title 23, section 2232]

f. Statewide General WDRs for Discharge of Biosolids to Land

For the discharge of biosolids from the wastewater treatment plant for land application, the Discharger shall obtain authorization to discharge under and meet the requirements of the State Water Resources Control Board Water Quality Order No. 2004-0012–DWQ General Waste Discharge Requirements for the Discharge of Biosolids to Land or Use as a Soil Amendment In Agricultural, Silvicultural, Horticultural, and Land Reclamation Activities.

6. Other Special Provisions

a. Storm Water Control

For the control of storm water discharged from the site of the wastewater treatment plant, if applicable, the Discharger shall obtain authorization to discharge under and meet the requirements of the State Water Board's Water Quality Order 97-03-DWQ, NPDES General Permit No. CAS000001, Waste Discharge Requirements for Discharges of Storm Water Associated with Industrial Activities Excluding Construction Activities (or subsequent renewed versions of the General Permit). The Discharger shall submit a notice of intent for coverage under Order No. 97-03-DWQ by **September 1, 2009**.

7. Compliance Schedules

This Order does not establish interim effluent limitations and schedules of compliance with final numeric effluent limitations.

VII. COMPLIANCE DETERMINATION

Compliance with the effluent limitations contained in Section IV of this Order that are derived from Ocean Plan Table B water quality objectives shall be determined as specified below:

A. Compliance with Single-Constituent Effluent Limitations.

Dischargers are out of compliance with the effluent limitation if the concentration of the pollutant (see Section c, below) in the monitoring sample is greater than the effluent limitation and greater than or equal to the reported Minimum Level.

B. Compliance with Effluent Limitations expressed as a Sum of Several Constituents

Dischargers are out of compliance with an effluent limitation which applies to the sum of a group of chemicals (e.g., PCB's) if the sum of the individual pollutant concentrations is greater than the effluent limitation. Individual pollutants of the group will be considered to have a concentration of zero if the constituent is reported as ND or DNQ.

DRAFT

C. Multiple Sample Data Reduction

The concentration of the pollutant in the effluent may be estimated from the result of a single sample analysis or by a measure of central tendency (arithmetic mean, geometric mean, median, etc.) of multiple sample analyses when all sample results are quantifiable (i.e., greater than or equal to the reported Minimum* Level). When one or more sample results are reported as ND or DNQ, the central tendency concentration of the pollutant shall be the median (middle) value of the multiple samples. If, in an even number of samples, one or both of the middle values is ND or DNQ, the median will be the lower of the two middle values.

DRAFT

ATTACHMENT A – DEFINITIONS

Acute Toxicity

a. Acute Toxicity (TUa)

Expressed in Toxic Units Acute (TUa)

$$TUa = \frac{100}{96\text{-hr LC } 50\%}$$

b. Lethal Concentration 50% (LC 50)

LC 50 (percent waste giving 50% survival of test organisms) shall be determined by static or continuous flow bioassay techniques using standard marine test species as specified in Ocean Plan Appendix III. If specific identifiable substances in wastewater can be demonstrated by the discharger as being rapidly rendered harmless upon discharge to the marine environment, but not as a result of dilution, the LC 50 may be determined after the test samples are adjusted to remove the influence of those substances.

When it is not possible to measure the 96-hour LC 50 due to greater than 50 percent survival of the test species in 100 percent waste, the toxicity concentration shall be calculated by the expression:

$$TUa = \frac{\log (100 - S)}{1.7}$$

where:

S = percentage survival in 100% waste. If S > 99, TUa shall be reported as zero.

Areas of Special Biological Significance (ASBS)

Those areas designated by the State Water Board as ocean areas requiring protection of species or biological communities to the extent that alteration of natural water quality is undesirable. All Areas of Special Biological Significance are also classified as a subset of STATE WATER QUALITY PROTECTION AREAS.

Average Monthly Effluent Limitation (AMEL)

The highest allowable average of daily discharges over a calendar month, calculated as the sum of all daily discharges measured during a calendar month divided by the number of daily discharges measured during that month.

DRAFT

Average Weekly Effluent Limitation (AWEL)

The highest allowable average of daily discharges over a calendar week (Sunday through Saturday), calculated as the sum of all daily discharges measured during a calendar week divided by the number of daily discharges measured during that week.

Chlordane

Shall mean the sum of chlordane-alpha, chlordane-gamma, chlordene-alpha, chlordene-gamma, nonachlor-alpha, nonachlor-gamma, and oxychlordane.

Chronic Toxicity

This parameter shall be used to measure the acceptability of waters for supporting a healthy marine biota until improved methods are developed to evaluate biological response.

a. Chronic Toxicity (TUc)

   Expressed as Toxic Units Chronic (TUc)

$$TUc = \frac{100}{NOEL}$$

b. No Observed Effect Level (NOEL)

   The NOEL is expressed as the maximum percent effluent or receiving water that causes no observable effect on a test organism, as determined by the result of a critical life stage toxicity test listed in Ocean Plan Appendix II.

Daily Discharge

Daily Discharge is defined as either: (1) the total mass of the constituent discharged over the calendar day (12:00 am through 11:59 pm) or any 24-hour period that reasonably represents a calendar day for purposes of sampling (as specified in the permit), for a constituent with limitations expressed in units of mass or; (2) the unweighted arithmetic mean measurement of the constituent over the day for a constituent with limitations expressed in other units of measurement (e.g., concentration).

The daily discharge may be determined by the analytical results of a composite sample taken over the course of one day (a calendar day or other 24-hour period defined as a day) or by the arithmetic mean of analytical results from one or more grab samples taken over the course of the day.

For composite sampling, if 1 day is defined as a 24-hour period other than a calendar day, the analytical result for the 24-hour period will be considered as the result for the calendar day in which the 24-hour period ends.

DRAFT

DDT

Shall mean the sum of 4,4'DDT, 2,4'DDT, 4,4'DDE, 2,4'DDE, 4,4'DDD, and 2,4'DDD.

Degrade

Degradation shall be determined by comparison of the waste field and reference site(s) for characteristic species diversity, population density, contamination, growth anomalies, debility, or supplanting of normal species by undesirable plant and animal species. Degradation occurs if there are significant differences in any of three major biotic groups, namely, demersal fish, benthic invertebrates, or attached algae. Other groups may be evaluated where benthic species are not affected, or are not the only ones affected.

Detected, but Not Quantified (DNQ)

Sample results that are less than the reported Minimum Level, but greater than or equal to the laboratory's MDL.

Dichlorobenzenes

Shall mean the sum of 1,2- and 1,3-dichlorobenzene.

Downstream Ocean Waters

Waters downstream with respect to ocean currents.

Dredged Material

Any material excavated or dredged from the navigable waters of the United States, including material otherwise referred to as "spoil".

Enclosed Bays

Indentations along the coast that enclose an area of oceanic water within distinct headlands or harbor works. Enclosed bays include all bays where the narrowest distance between headlands or outermost harbor works is less than 75 percent of the greatest dimension of the enclosed portion of the bay. This definition includes but is not limited to: Humboldt Bay, Bodega Harbor, Tomales Bay, Drakes Estero, San Francisco Bay, Morro Bay, Los Angeles Harbor, Upper and Lower Newport Bay, Mission Bay, and San Diego Bay.

Endosulfan

The sum of endosulfan-alpha and -beta and endosulfan sulfate.

Estuaries and Coastal Lagoons

Waters at the mouths of streams that serve as mixing zones for fresh and ocean waters during a major portion of the year. Mouths of streams that are temporarily separated from the ocean by sandbars shall be considered as estuaries. Estuarine waters will generally be considered to extend from a bay or the open ocean to the upstream limit of tidal action but may be considered to extend seaward if significant mixing of fresh and salt water occurs in the open

DRAFT

coastal waters. The waters described by this definition include but are not limited to the Sacramento-San Joaquin Delta as defined by Section 12220 of the California Water Code, Suisun Bay, Carquinez Strait downstream to Carquinez Bridge, and appropriate areas of the Smith, Klamath, Mad, Eel, Noyo, and Russian Rivers.

Halomethanes

The sum of bromoform, bromomethane (methyl bromide) and chloromethane (methyl chloride).

HCH

The sum of the alpha, beta, gamma (lindane) and delta isomers of hexachlorocyclohexane.

Initial Dilution

The process that results in the rapid and irreversible turbulent mixing of wastewater with ocean water around the point of discharge.

For a submerged buoyant discharge, characteristic of most municipal and industrial wastes that are released from the submarine outfalls, the momentum of the discharge and its initial buoyancy act together to produce turbulent mixing. Initial dilution in this case is completed when the diluting wastewater ceases to rise in the water column and first begins to spread horizontally.

For shallow water submerged discharges, surface discharges, and non-buoyant discharges, characteristic of cooling water wastes and some individual discharges, turbulent mixing results primarily from the momentum of discharge. Initial dilution, in these cases, is considered to be completed when the momentum induced velocity of the discharge ceases to produce significant mixing of the waste, or the diluting plume reaches a fixed distance from the discharge to be specified by the Regional Board, whichever results in the lower estimate for initial dilution.

Instantaneous Maximum Effluent Limitation

The highest allowable value for any single grab sample or aliquot (i.e., each grab sample or aliquot is independently compared to the instantaneous maximum limitation).

Instantaneous Minimum Effluent Limitation

The lowest allowable value for any single grab sample or aliquot (i.e., each grab sample or aliquot is independently compared to the instantaneous minimum limitation).

Kelp Beds

For purposes of the bacteriological standards of the Ocean Plan, are significant aggregations of marine algae of the genera Macrocystis and Nereocystis. Kelp beds include the total foliage canopy of Macrocystis and Nereocystis plants throughout the water column.

Mariculture

The culture of plants and animals in marine waters independent of any pollution source.

DRAFT

Material

(a) In common usage: (1) the substance or substances of which a thing is made or composed (2) substantial; (b) For purposes of the Ocean Plan relating to waste disposal, dredging and the disposal of dredged material and fill, MATERIAL means matter of any kind or description which is subject to regulation as waste, or any material dredged from the navigable waters of the United States. See also, DREDGED MATERIAL.

Maximum Daily Effluent Limitation (MDEL)

The highest allowable daily discharge of a pollutant.

Method Detection Limit (MDL)

The minimum concentration of a substance that can be measured and reported with 99 percent confidence that the analyte concentration is greater than zero, as defined in title 40 of the Code of Federal Regulations, Part 136, Attachment B.

Minimum Level (ML)

The concentration at which the entire analytical system must give a recognizable signal and acceptable calibration point. The ML is the concentration in a sample that is equivalent to the concentration of the lowest calibration standard analyzed by a specific analytical procedure, assuming that all the method specified sample weights, volumes, and processing steps have been followed.

Natural Light

Reduction of natural light may be determined by the Regional Water Board by measurement of light transmissivity or total irradiance, or both, according to the monitoring needs of the Regional Water Board.

Not Detected (ND)

Those sample results less than the laboratory's MDL.

Ocean Waters

The territorial marine waters of the State as defined by California law to the extent these waters are outside of enclosed bays, estuaries, and coastal lagoons. If a discharge outside the territorial waters of the state could affect the quality of the waters of the state, the discharge may be regulated to assure no violation of the Ocean Plan will occur in ocean waters.

PAHs (polynuclear aromatic hydrocarbons)

The sum of acenaphthylene, anthracene, 1,2-benzanthracene, 3,4-benzofluoranthene, benzo[k]fluoranthene, 1,12-benzoperylene, benzo[a]pyrene, chrysene, dibenzo[ah]anthracene, fluorene, indeno[1,2,3-cd]pyrene, phenanthrene and pyrene.

DRAFT

PCBs (polychlorinated biphenyls)

The sum of chlorinated biphenyls whose analytical characteristics resemble those of Aroclor-1016, Aroclor-1221, Aroclor-1232, Aroclor-1242, Aroclor-1248, Aroclor-1254 and Aroclor-1260.

Pollutant Minimization Program (PMP)

PMP means waste minimization and pollution prevention actions that include, but are not limited to, product substitution, waste stream recycling, alternative waste management methods, and education of the public and businesses. The goal of the PMP shall be to reduce all potential sources of Ocean Plan Table B pollutants through pollutant minimization (control) strategies, including pollution prevention measures as appropriate, to maintain the effluent concentration at or below the water quality-based effluent limitation. Pollution prevention measures may be particularly appropriate for persistent bioaccumulative priority pollutants where there is evidence that beneficial uses are being impacted. The Regional Water Board may consider cost effectiveness when establishing the requirements of a PMP. The completion and implementation of a Pollution Prevention Plan, if required pursuant to Water Code section 13263.3(d), shall be considered to fulfill the PMP requirements.

Reported Minimum Level

The ML (and its associated analytical method) chosen by the Discharger for reporting and compliance determination from the MLs included in this Order. The MLs included in this Order correspond to approved analytical methods for reporting a sample result that are selected by the Regional Water Board either from Appendix II of the Ocean Plan in accordance with section III.C.5.a. of the Ocean Plan or established in accordance with section III.C.5.b. of the Ocean Plan. The ML is based on the proper application of method-based analytical procedures for sample preparation and the absence of any matrix interferences. Other factors may be applied to the ML depending on the specific sample preparation steps employed. For example, the treatment typically applied in cases where there are matrix-effects is to dilute the sample or sample aliquot by a factor of ten. In such cases, this additional factor must be applied to the ML in the computation of the reported ML.

Satellite Collection System

The portion, if any, of a sanitary sewer system owned or operated by a different public agency than the agency that owns and operates the wastewater treatment facility that a sanitary sewer system is tributary to.

Shellfish

Organisms identified by the California Department of Health Services as shellfish for public health purposes (i.e., mussels, clams and oysters).

Significant Difference

Defined as a statistically significant difference in the means of two distributions of sampling results at the 95 percent confidence level.

DRAFT

Six-Month Median Effluent Limitation

The highest allowable moving median of all daily discharges for any 180-day period.

State Water Quality Protection Areas (SWQPAs)

Non-terrestrial marine or estuarine areas designated to protect marine species or biological communities from an undesirable alteration in natural water quality. All AREAS OF SPECIAL BIOLOGICAL SIGNIFICANCE (ASBS) that were previously designated by the State Water Board in Resolution No.s 74-28, 74-32, and 75-61 are now also classified as a subset of State Water Quality Protection Areas and require special protections afforded by the Ocean Plan.

TCDD Equivalents

The sum of the concentrations of chlorinated dibenzodioxins (2,3,7,8-CDDs) and chlorinated dibenzofurans (2,3,7,8-CDFs) multiplied by their respective toxicity factors, as shown in the table below.

Isomer Group	Toxicity Equivalence Factor
2,3,7,8-tetra CDD	1.0
2,3,7,8-penta CDD	0.5
2,3,7,8-hexa CDDs	0.1
2,3,7,8-hepta CDD	0.01
octa CDD	0.001
2,3,7,8 tetra CDF	0.1
1,2,3,7,8 penta CDF	0.05
2,3,4,7,8 penta CDF	0.5
2,3,7,8 hexa CDFs	0.1
2,3,7,8 hepta CDFs	0.01
octa CDF	0.001

Toxicity Reduction Evaluation (TRE)

A study conducted in a step-wise process designed to identify the causative agents of effluent or ambient toxicity, isolate the sources of toxicity, evaluate the effectiveness of toxicity control options, and then confirm the reduction in toxicity. The first steps of the TRE consist of the collection of data relevant to the toxicity, including additional toxicity testing, and an evaluation of facility operations and maintenance practices, and best management practices. A Toxicity Identification Evaluation (TIE) may be required as part of the TRE, if appropriate. (A TIE is a set of procedures to identify the specific chemical(s) responsible for toxicity. These procedures are performed in three phases (characterization, identification, and confirmation) using aquatic organism toxicity tests.)

DRAFT

Waste

As used in the Ocean Plan, waste includes a Discharger's total discharge, of whatever origin, i.e., gross, not net, discharge.

Water Reclamation

The treatment of wastewater to render it suitable for reuse, the transportation of treated wastewater to the place of use, and the actual use of treated wastewater for a direct beneficial use or controlled use that would not otherwise occur.

DRAFT

ATTACHMENT B – MAP

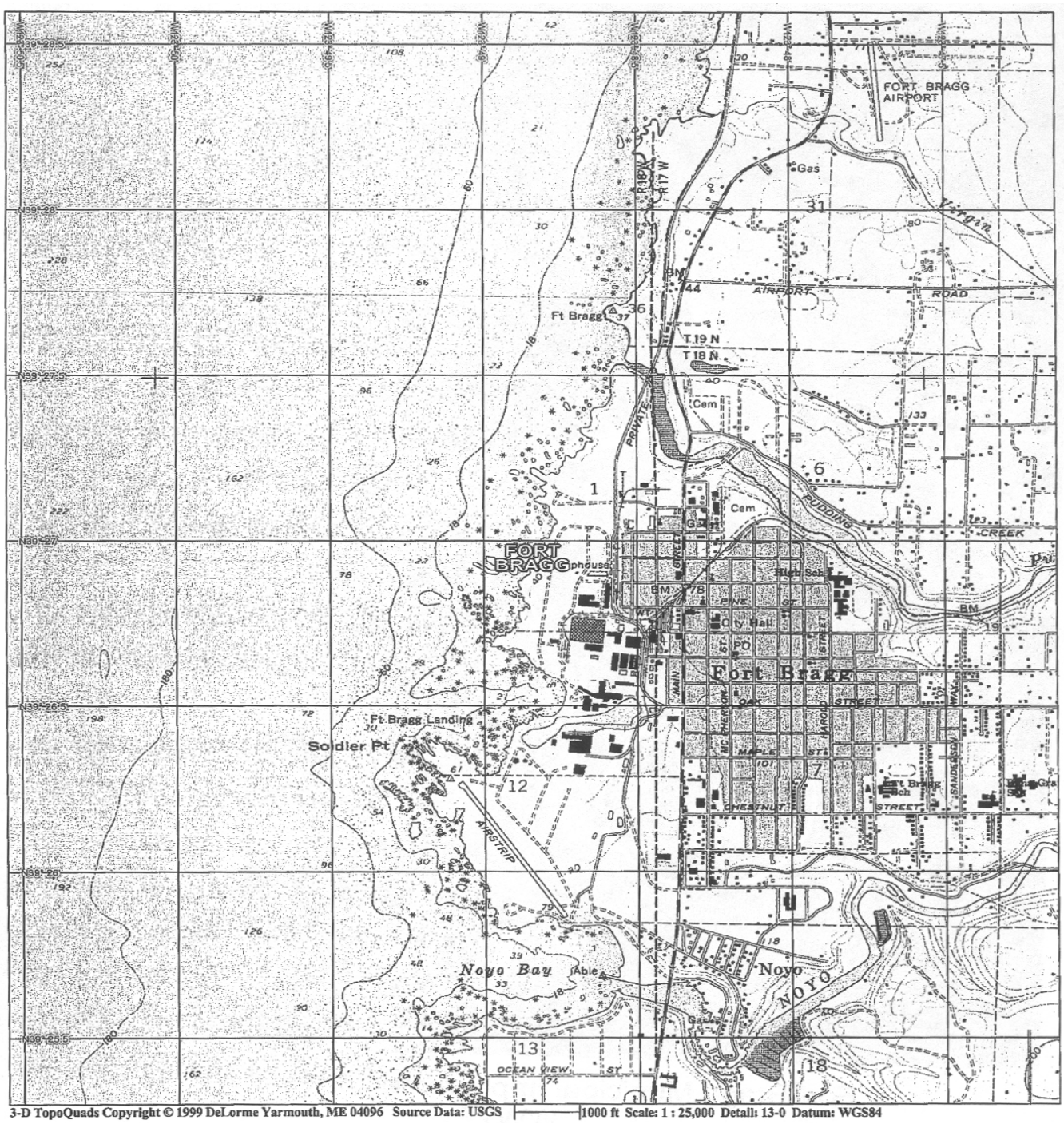

ATTACHMENT C – FLOW SCHEMATIC

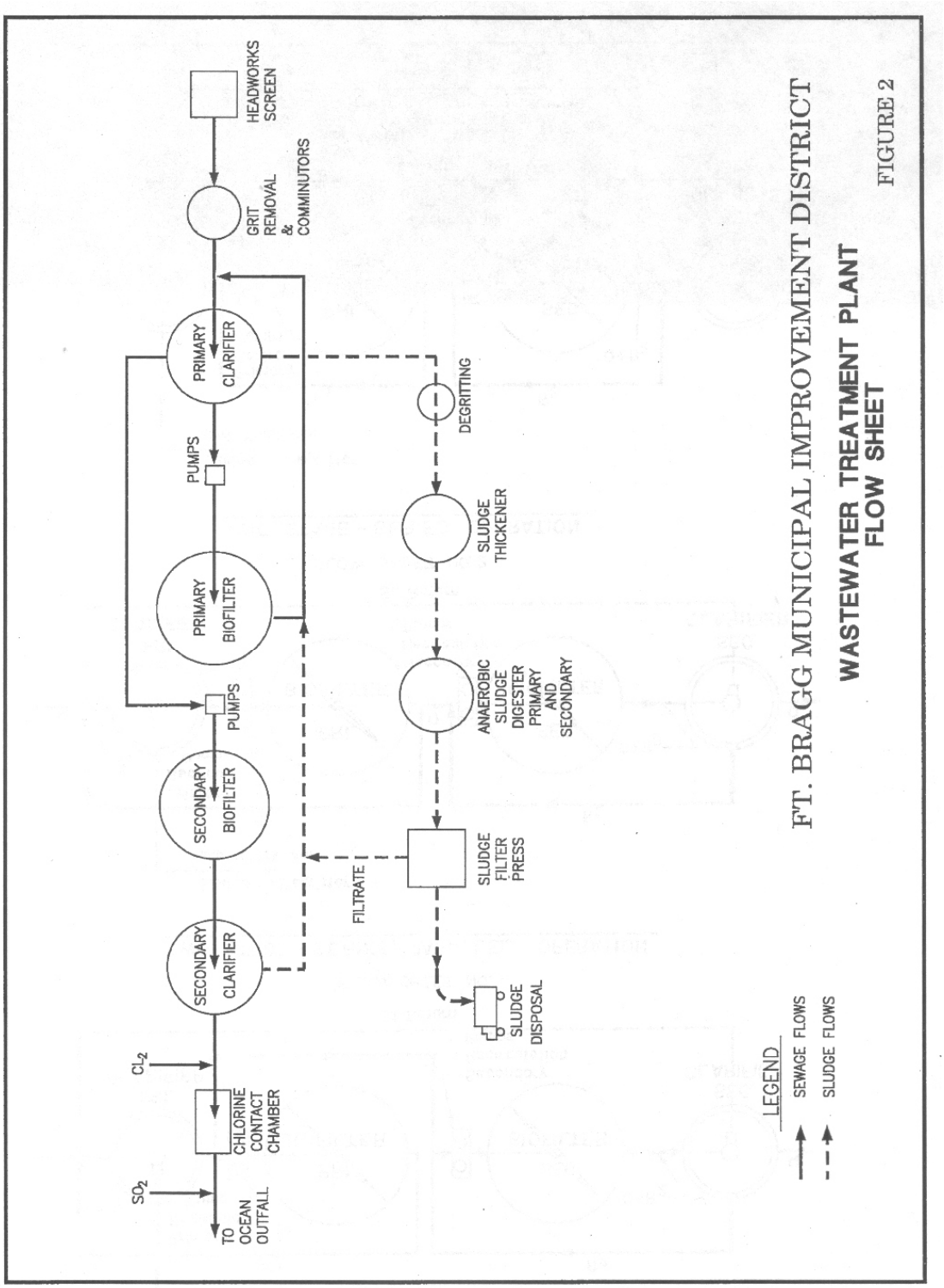

ATTACHMENT D –STANDARD PROVISIONS

I. STANDARD PROVISIONS – PERMIT COMPLIANCE

A. Duty to Comply

1. The Discharger must comply with all of the conditions of this Order. Any noncompliance constitutes a violation of the Clean Water Act (CWA) and the California Water Code and is grounds for enforcement action, for permit termination, revocation and reissuance, or modification; or denial of a permit renewal application. (40 C.F.R. § 122.41(a).)

2. The Discharger shall comply with effluent standards or prohibitions established under Section 307(a) of the CWA for toxic pollutants and with standards for sewage sludge use or disposal established under Section 405(d) of the CWA within the time provided in the regulations that establish these standards or prohibitions, even if this Order has not yet been modified to incorporate the requirement. (40 C.F.R. § 122.41(a)(1).)

B. Need to Halt or Reduce Activity Not a Defense

It shall not be a defense for a Discharger in an enforcement action that it would have been necessary to halt or reduce the permitted activity in order to maintain compliance with the conditions of this Order. (40 C.F.R. § 122.41(c).)

C. Duty to Mitigate

The Discharger shall take all reasonable steps to minimize or prevent any discharge or sludge use or disposal in violation of this Order that has a reasonable likelihood of adversely affecting human health or the environment. (40 C.F.R. § 122.41(d).)

D. Proper Operation and Maintenance

The Discharger shall at all times properly operate and maintain all facilities and systems of treatment and control (and related appurtenances) which are installed or used by the Discharger to achieve compliance with the conditions of this Order. Proper operation and maintenance also includes adequate laboratory controls and appropriate quality assurance procedures. This provision requires the operation of backup or auxiliary facilities or similar systems that are installed by a Discharger only when necessary to achieve compliance with the conditions of this Order. (40 C.F.R. § 122.41(e)

E. Property Rights

1. This Order does not convey any property rights of any sort or any exclusive privileges. (40 C.F.R. § 122.41(g).)

DRAFT

2. The issuance of this Order does not authorize any injury to persons or property or invasion of other private rights, or any infringement of state or local law or regulations. (40 C.F.R. § 122.5(c).)

F. Inspection and Entry

The Discharger shall allow the Regional Water Board, State Water Board, United States Environmental Protection Agency (USEPA), and/or their authorized representatives (including an authorized contractor acting as their representative), upon the presentation of credentials and other documents, as may be required by law, to (40 C.F.R. § 122.41(i); Wat. Code, § 13383):

1. Enter upon the Discharger's premises where a regulated facility or activity is located or conducted, or where records are kept under the conditions of this Order (40 C.F.R. § 122.41(i)(1));

2. Have access to and copy, at reasonable times, any records that must be kept under the conditions of this Order (40 C.F.R. § 122.41(i)(2));

3. Inspect and photograph, at reasonable times, any facilities, equipment (including monitoring and control equipment), practices, or operations regulated or required under this Order (40 C.F.R. § 122.41(i)(3)); and

4. Sample or monitor, at reasonable times, for the purposes of assuring Order compliance or as otherwise authorized by the CWA or the Water Code, any substances or parameters at any location. (40 C.F.R. § 122.41(i)(4).)

G. Bypass

1. Definitions

   a. "Bypass" means the intentional diversion of waste streams from any portion of a treatment facility. (40 C.F.R. § 122.41(m)(1)(i).)

   b. "Severe property damage" means substantial physical damage to property, damage to the treatment facilities, which causes them to become inoperable, or substantial and permanent loss of natural resources that can reasonably be expected to occur in the absence of a bypass. Severe property damage does not mean economic loss caused by delays in production. (40 C.F.R. § 122.41(m)(1)(ii).)

2. Bypass not exceeding limitations. The Discharger may allow any bypass to occur which does not cause exceedances of effluent limitations, but only if it is for essential maintenance to assure efficient operation. These bypasses are not subject to the provisions listed in Standard Provisions – Permit Compliance I.G.3, I.G.4, and I.G.5 below. (40 C.F.R. § 122.41(m)(2).)

DRAFT

3. Prohibition of bypass. Bypass is prohibited, and the Regional Water Board may take enforcement action against a Discharger for bypass, unless (40 C.F.R. § 122.41(m)(4)(i)):

   a. Bypass was unavoidable to prevent loss of life, personal injury, or severe property damage (40 C.F.R. § 122.41(m)(4)(i)(A));

   b. There were no feasible alternatives to the bypass, such as the use of auxiliary treatment facilities, retention of untreated wastes, or maintenance during normal periods of equipment downtime. This condition is not satisfied if adequate back-up equipment should have been installed in the exercise of reasonable engineering judgment to prevent a bypass that occurred during normal periods of equipment downtime or preventive maintenance (40 C.F.R. § 122.41(m)(4)(i)(B)); and

   c. The Discharger submitted notice to the Regional Water Board as required under Standard Provisions – Permit Compliance I.G.5 below. (40 C.F.R. § 122.41(m)(4)(i)(C).)

4. The Regional Water Board may approve an anticipated bypass, after considering its adverse effects, if the Regional Water Board determines that it will meet the three conditions listed in Standard Provisions – Permit Compliance I.G.3 above. (40 C.F.R. § 122.41(m)(4)(ii).)

5. Notice

   a. Anticipated bypass. If the Discharger knows in advance of the need for a bypass, it shall submit a notice, if possible at least 10 days before the date of the bypass. (40 C.F.R. § 122.41(m)(3)(i).)

   b. Unanticipated bypass. The Discharger shall submit notice of an unanticipated bypass as required in Standard Provisions - Reporting V.E below (24-hour notice). (40 C.F.R. § 122.41(m)(3)(ii).)

H. Upset

Upset means an exceptional incident in which there is unintentional and temporary noncompliance with technology based permit effluent limitations because of factors beyond the reasonable control of the Discharger. An upset does not include noncompliance to the extent caused by operational error, improperly designed treatment facilities, inadequate treatment facilities, lack of preventive maintenance, or careless or improper operation. (40 C.F.R. § 122.41(n)(1).)

1. Effect of an upset. An upset constitutes an affirmative defense to an action brought for noncompliance with such technology based permit effluent limitations if the requirements of Standard Provisions – Permit Compliance I.H.2 below are met. No

determination made during administrative review of claims that noncompliance was caused by upset, and before an action for noncompliance, is final administrative action subject to judicial review. (40 C.F.R. § 122.41(n)(2).).

2. Conditions necessary for a demonstration of upset. A Discharger who wishes to establish the affirmative defense of upset shall demonstrate, through properly signed, contemporaneous operating logs or other relevant evidence that (40 C.F.R. § 122.41(n)(3)):

   a. An upset occurred and that the Discharger can identify the cause(s) of the upset (40 C.F.R. § 122.41(n)(3)(i));

   b. The permitted facility was, at the time, being properly operated (40 C.F.R. § 122.41(n)(3)(ii));

   c. The Discharger submitted notice of the upset as required in Standard Provisions – Reporting V.E.2.b below (24-hour notice) (40 C.F.R. § 122.41(n)(3)(iii)); and

   d. The Discharger complied with any remedial measures required under Standard Provisions – Permit Compliance I.C above. (40 C.F.R. § 122.41(n)(3)(iv).)

3. Burden of proof. In any enforcement proceeding, the Discharger seeking to establish the occurrence of an upset has the burden of proof. (40 C.F.R. § 122.41(n)(4).)

II. STANDARD PROVISIONS – PERMIT ACTION

A. General

This Order may be modified, revoked and reissued, or terminated for cause. The filing of a request by the Discharger for modification, revocation and reissuance, or termination, or a notification of planned changes or anticipated noncompliance does not stay any Order condition. (40 C.F.R. § 122.41(f).)

B. Duty to Reapply

If the Discharger wishes to continue an activity regulated by this Order after the expiration date of this Order, the Discharger must apply for and obtain a new permit. (40 C.F.R. § 122.41(b).)

C. Transfers

This Order is not transferable to any person except after notice to the Regional Water Board. The Regional Water Board may require modification or revocation and reissuance of the Order to change the name of the Discharger and incorporate such other

DRAFT

requirements as may be necessary under the CWA and the Water Code. (40 C.F.R. § 122.41(l)(3); § 122.61.)

III. STANDARD PROVISIONS – MONITORING

A. Samples and measurements taken for the purpose of monitoring shall be representative of the monitored activity. (40 C.F.R. § 122.41(j)(1).)

B. Monitoring results must be conducted according to test procedures under Part 136 or, in the case of sludge use or disposal, approved under Part 136 unless otherwise specified in Part 503 unless other test procedures have been specified in this Order. (40 C.F.R. § 122.41(j)(4); § 122.44(i)(1)(iv).)

IV. STANDARD PROVISIONS – RECORDS

A. Except for records of monitoring information required by this Order related to the Discharger's sewage sludge use and disposal activities, which shall be retained for a period of at least five years (or longer as required by Part 503), the Discharger shall retain records of all monitoring information, including all calibration and maintenance records and all original strip chart recordings for continuous monitoring instrumentation, copies of all reports required by this Order, and records of all data used to complete the application for this Order, for a period of at least three (3) years from the date of the sample, measurement, report or application. This period may be extended by request of the Regional Water Board Executive Officer at any time. (40 C.F.R. § 122.41(j)(2).)

B. Records of monitoring information shall include:

1. The date, exact place, and time of sampling or measurements (40 C.F.R. § 122.41(j)(3)(i));

2. The individual(s) who performed the sampling or measurements (40 C.F.R. § 122.41(j)(3)(ii));

3. The date(s) analyses were performed (40 C.F.R. § 122.41(j)(3)(iii));

4. The individual(s) who performed the analyses (40 C.F.R. § 122.41(j)(3)(iv));

5. The analytical techniques or methods used (40 C.F.R. § 122.41(j)(3)(v)); and

6. The results of such analyses. (40 C.F.R. § 122.41(j)(3)(vi).)

C. Claims of confidentiality for the following information will be denied (40 C.F.R. § 122.7(b)):

1. The name and address of any permit applicant or Discharger (40 C.F.R. § 122.7(b)(1)); and

DRAFT

2. Permit applications and attachments, permits and effluent data. (40 C.F.R. § 122.7(b)(2).)

V. STANDARD PROVISIONS – REPORTING

A. Duty to Provide Information

The Discharger shall furnish to the Regional Water Board, State Water Board, or USEPA within a reasonable time, any information which the Regional Water Board, State Water Board, or USEPA may request to determine whether cause exists for modifying, revoking and reissuing, or terminating this Order or to determine compliance with this Order. Upon request, the Discharger shall also furnish to the Regional Water Board, State Water Board, or USEPA copies of records required to be kept by this Order. (40 C.F.R. § 122.41(h); Wat. Code, § 13267.)

B. Signatory and Certification Requirements

1. All applications, reports, or information submitted to the Regional Water Board, State Water Board, and/or USEPA shall be signed and certified in accordance with Standard Provisions – Reporting V.B.2, V.B.3, V.B.4, and V.B.5 below. (40 C.F.R. § 122.41(k).)

2. All permit applications shall be signed by either a principal executive officer or ranking elected official. For purposes of this provision, a principal executive officer of a federal agency includes: (i) the chief executive officer of the agency, or (ii) a senior executive officer having responsibility for the overall operations of a principal geographic unit of the agency (e.g., Regional Administrators of USEPA). (40 C.F.R. § 122.22(a)(3).).

3. All reports required by this Order and other information requested by the Regional Water Board, State Water Board, or USEPA shall be signed by a person described in Standard Provisions – Reporting V.B.2 above, or by a duly authorized representative of that person. A person is a duly authorized representative only if:

   a. The authorization is made in writing by a person described in Standard Provisions – Reporting V.B.2 above (40 C.F.R. § 122.22(b)(1));

   b. The authorization specifies either an individual or a position having responsibility for the overall operation of the regulated facility or activity such as the position of plant manager, operator of a well or a well field, superintendent, position of equivalent responsibility, or an individual or position having overall responsibility for environmental matters for the company. (A duly authorized representative may thus be either a named individual or any individual occupying a named position.) (40 C.F.R. § 122.22(b)(2)); and

DRAFT

c. The written authorization is submitted to the Regional Water Board and State Water Board. (40 C.F.R. § 122.22(b)(3).)

4. If an authorization under Standard Provisions – Reporting V.B.3 above is no longer accurate because a different individual or position has responsibility for the overall operation of the facility, a new authorization satisfying the requirements of Standard Provisions – Reporting V.B.3 above must be submitted to the Regional Water Board and State Water Board prior to or together with any reports, information, or applications, to be signed by an authorized representative. (40 C.F.R. § 122.22(c).)

5. Any person signing a document under Standard Provisions – Reporting V.B.2 or V.B.3 above shall make the following certification:

   "I certify under penalty of law that this document and all attachments were prepared under my direction or supervision in accordance with a system designed to assure that qualified personnel properly gather and evaluate the information submitted. Based on my inquiry of the person or persons who manage the system or those persons directly responsible for gathering the information, the information submitted is, to the best of my knowledge and belief, true, accurate, and complete. I am aware that there are significant penalties for submitting false information, including the possibility of fine and imprisonment for knowing violations." (40 C.F.R. § 122.22(d).)

C. Monitoring Reports

1. Monitoring results shall be reported at the intervals specified in the Monitoring and Reporting Program (Attachment E) in this Order. (40 C.F.R. § 122.22(l)(4).)

2. Monitoring results must be reported on a Discharge Monitoring Report (DMR) form or forms provided or specified by the Regional Water Board or State Water Board for reporting results of monitoring of sludge use or disposal practices. (40 C.F.R. § 122.41(l)(4)(i).)

3. If the Discharger monitors any pollutant more frequently than required by this Order using test procedures approved under Part 136 or, in the case of sludge use or disposal, approved under Part 136 unless otherwise specified in Part 503, or as specified in this Order, the results of this monitoring shall be included in the calculation and reporting of the data submitted in the DMR or sludge reporting form specified by the Regional Water Board. (40 C.F.R. § 122.41(l)(4)(ii).)

4. Calculations for all limitations, which require averaging of measurements, shall utilize an arithmetic mean unless otherwise specified in this Order. (40 C.F.R. § 122.41(l)(4)(iii).)

DRAFT

D. Compliance Schedules

Reports of compliance or noncompliance with, or any progress reports on, interim and final requirements contained in any compliance schedule of this Order, shall be submitted no later than 14 days following each schedule date. (40 C.F.R. § 122.41(l)(5).)

E. Twenty-Four Hour Reporting

1. The Discharger shall report any noncompliance that may endanger health or the environment. Any information shall be provided orally within 24 hours from the time the Discharger becomes aware of the circumstances. A written submission shall also be provided within five (5) days of the time the Discharger becomes aware of the circumstances. The written submission shall contain a description of the noncompliance and its cause; the period of noncompliance, including exact dates and times, and if the noncompliance has not been corrected, the anticipated time it is expected to continue; and steps taken or planned to reduce, eliminate, and prevent reoccurrence of the noncompliance. (40 C.F.R. § 122.41(l)(6)(i).)

2. The following shall be included as information that must be reported within 24 hours under this paragraph (40 C.F.R. § 122.41(l)(6)(ii)):

   a. Any unanticipated bypass that exceeds any effluent limitation in this Order. (40 C.F.R. § 122.41(l)(6)(ii)(A).)

   b. Any upset that exceeds any effluent limitation in this Order. (40 C.F.R. § 122.41(l)(6)(ii)(B).)

3. The Regional Water Board may waive the above-required written report under this provision on a case-by-case basis if an oral report has been received within 24 hours. (40 C.F.R. § 122.41(l)(6)(iii).)

F. Planned Changes

The Discharger shall give notice to the Regional Water Board as soon as possible of any planned physical alterations or additions to the permitted facility. Notice is required under this provision only when (40 C.F.R. § 122.41(l)(1)):

1. The alteration or addition to a permitted facility may meet one of the criteria for determining whether a facility is a new source in section 122.29(b) (40 C.F.R. § 122.41(l)(1)(i)); or

2. The alteration or addition could significantly change the nature or increase the quantity of pollutants discharged. This notification applies to pollutants that are not subject to effluent limitations in this Order. (40 C.F.R. § 122.41(l)(1)(ii).)

3. The alteration or addition results in a significant change in the Discharger's sludge use or disposal practices, and such alteration, addition, or change may justify the

DRAFT

application of permit conditions that are different from or absent in the existing permit, including notification of additional use or disposal sites not reported during the permit application process or not reported pursuant to an approved land application plan. (40 C.F.R.§ 122.41(l)(1)(iii).)

G. Anticipated Noncompliance

The Discharger shall give advance notice to the Regional Water Board or State Water Board of any planned changes in the permitted facility or activity that may result in noncompliance with General Order requirements. (40 C.F.R. § 122.41(l)(2).)

H. Other Noncompliance

The Discharger shall report all instances of noncompliance not reported under Standard Provisions – Reporting V.C, V.D, and V.E above at the time monitoring reports are submitted. The reports shall contain the information listed in Standard Provision – Reporting V.E above. (40 C.F.R. § 122.41(l)(7).)

I. Other Information

When the Discharger becomes aware that it failed to submit any relevant facts in a permit application, or submitted incorrect information in a permit application or in any report to the Regional Water Board, State Water Board, or USEPA, the Discharger shall promptly submit such facts or information. (40 C.F.R. § 122.41(l)(8).)

VI. STANDARD PROVISIONS – ENFORCEMENT

A. The Regional Water Board is authorized to enforce the terms of this permit under several provisions of the Water Code, including, but not limited to, sections 13385, 13386, and 13387.

VII. ADDITIONAL PROVISIONS – NOTIFICATION LEVELS

A. Non-Municipal Facilities

Existing manufacturing, commercial, mining, and silvicultural Dischargers shall notify the Regional Water Board as soon as they know or have reason to believe (40 C.F.R. § 122.42(a)):

1. That any activity has occurred or will occur that would result in the discharge, on a routine or frequent basis, of any toxic pollutant that is not limited in this Order, if that discharge will exceed the highest of the following "notification levels" (40 C.F.R. § 122.42(a)(1)):

a. 100 micrograms per liter (µg/L) (40 C.F.R. § 122.42(a)(1)(i));

b. 200 µg/L for acrolein and acrylonitrile; 500 µg/L for 2,4-dinitrophenol and 2-methyl-4,6-dinitrophenol; and 1 milligram per liter (mg/L) for antimony (40 C.F.R. § 122.42(a)(1)(ii));

c. Five (5) times the maximum concentration value reported for that pollutant in the Report of Waste Discharge (40 C.F.R. § 122.42(a)(1)(iii)); or

d. The level established by the Regional Water Board in accordance with section 122.44(f). (40 C.F.R. § 122.42(a)(1)(iv).)

2. That any activity has occurred or will occur that would result in the discharge, on a non-routine or infrequent basis, of any toxic pollutant that is not limited in this Order, if that discharge will exceed the highest of the following “notification levels" (40 C.F.R. § 122.42(a)(2)):

a. 500 micrograms per liter (µg/L) (40 C.F.R. § 122.42(a)(2)(i));

b. 1 milligram per liter (mg/L) for antimony (40 C.F.R. § 122.42(a)(2)(ii));

c. Ten (10) times the maximum concentration value reported for that pollutant in the Report of Waste Discharge (40 C.F.R. § 122.42(a)(2)(iii)); or

d. The level established by the Regional Water Board in accordance with section 122.44(f). (40 C.F.R. § 122.42(a)(2)(iv).)

DRAFT

ATTACHMENT E – MONITORING AND REPORTING PROGRAM

Table of Contents

Attachment E – Monitoring and Reporting Program (MRP) E-2
I. General Monitoring Provisions E-2
II. Monitoring Locations E-2
III. Influent Monitoring Requirements E-3
A. Monitoring Location INF-001 ..... E-3
IV. Effluent Monitoring Requirements E-3
A. Monitoring Location EFF-001 ..... E-3
V. Whole Effluent Toxicity Testing Requirements E-4
VI. Land Discharge Monitoring Requirements E-9
VII. Reclamation Monitoring Requirements E-9
VIII. Receiving Water Monitoring Requirements – Surface Water and Groundwater E-9
A. Monitoring Location REF-001 ..... E-9
IX. Other Monitoring Requirements E-9
X. Reporting Requirements E-10
A. General Monitoring and Reporting Requirements E-10
B. Self Monitoring Reports (SMRs) E-10
C. Discharge Monitoring Reports (DMRs) E-12
D. Other Reports E-13

List of Tables

Table E-1. Monitoring Station Locations E-2
Table E-2. Influent Monitoring E-3
Table E-3. Effluent Monitoring, Monitoring Location EFF-001 ..... E-4
Table E-4. Summary of WET Testing Requirements E-5
Table E-5. Approved Tests—Chronic Toxicity E-5
Table E-6. Monitoring Periods and Reporting Schedule E-10

DRAFT

ATTACHMENT E – MONITORING AND REPORTING PROGRAM (MRP)

The Code of Federal Regulations section 122.48 requires that all NPDES permits specify monitoring and reporting requirements. Water Code Sections 13267 and 13383 also authorize the Regional Water Quality Control Board (Regional Water Board) to require technical and monitoring reports. This MRP establishes monitoring and reporting requirements, which implement the federal and California regulations.

I. GENERAL MONITORING PROVISIONS

A. Wastewater Monitoring Provision. Composite samples may be taken by a proportional sampling device approved by the Executive Officer or by grab samples composited in proportion to flow. In compositing grab samples, the sampling interval shall not exceed one hour.

B. If the Discharger monitors any pollutant more frequently than required by this Order, using test procedures approved by 40 CFR Part 136 or as specified in this Order, the results of such monitoring shall be included in the calculation and reporting of the data submitted in the monthly and annual discharger monitoring reports.

C. Laboratories analyzing monitoring samples shall be certified by the Department of Health Services, in accordance with the provisions of water Code section 13176, and must include quality assurance / quality control data with their analytical reports.

II. MONITORING LOCATIONS

The Discharger shall establish the following monitoring locations to demonstrate compliance with the effluent limitations, discharge specifications, and other requirements in this Order.

Table E-1. Monitoring Station Locations

Discharge Point	Monitoring Location	Monitoring Location Description
---	INF-001	A location where representative samples of wastewater can be collected prior to treatment
001	EFF-001	A location where representative samples of treated wastewater, to be discharged to the Pacific Ocean at Discharge Point 001, can be collected at a point after treatment, including chlorination/dechlorination, and before contact with the receiving water
--	REF-001	A location in the vicinity of the outfall diffuser in the Pacific Ocean

DRAFT

III. INFLUENT MONITORING REQUIREMENTS

A. Monitoring Location INF-001

1. The Discharger shall monitor influent to the wastewater treatment plant at Monitoring Location INF-001 as follows.

Table E-2. Influent Monitoring

Parameter	Units	Sample Type	Sampling Frequency	Required Analytical Test Method
BOD_5	mg/L	24-hr Composite	Weekly[1]	Standard Methods
TSS	mg/L	24-hr Composite	Weekly	Standard Methods
Flow[2]	MGD	Continuous	Continuous	Meter

IV. EFFLUENT MONITORING REQUIREMENTS

A. Monitoring Location EFF-001

1. The Discharger shall monitor treated wastewater to be discharged to the Pacific Ocean prior to contact with the receiving water at Monitoring Location EFF-001 as follows.

DRAFT

[1] Monitoring of BOD_5 and TSS in influent shall coincide with monitoring of these parameters in effluent. For compliance determination, weekly and monthly averages will be based on the calendar weeks (Sunday through Saturday) and months.

[2] For each month, the Discharger shall report the maximum daily and mean daily flow rates.

Table E-3. Effluent Monitoring, Monitoring Location EFF-001

Parameter	Units	Sample Type[3]	Sampling Frequency	Required Analytical Test Method
Flow[2]	mgd	Continuous	Continuous	Meter
BOD_5	mg/L	24-hr Composite	Weekly	SM 5210 B
TSS	mg/L	24-hr Composite	Weekly	SM 2540 D
Oil and Grease	mg/L	Grab	Monthly	Standard Methods
pH	s.u.	Grab	Daily	40 CFR 136
Settleable Solids	mL/L-hr	24-hr Composite	Daily	Standard Methods
Total Residual Chlorine[4]	mg/L	Grab	Daily	40 CFR 136
Total Coliform	MPN/100 ml	Grab	Weekly	Standard Methods
Turbidity	NTU	24-hr Composite	Daily	Standard Methods
Copper	µg/L	24-hr Composite	Monthly	40 CFR 136
Zinc	µg/L	24-hr Composite	Monthly	40 CFR 136
Chronic Toxicity	TUc	Grab	Annually	40 CFR 136
Remaining Ocean Plan Table B Pollutants	µg/L	24-hr Composite	Annually	40 CFR 136

V. WHOLE EFFLUENT TOXICITY TESTING REQUIREMENTS

Although effluent limitations for whole effluent toxicity (WET) are not established by the Order, WET testing of discharges and receiving water is required by this MRP to determine compliance with water quality objectives established by the Ocean Plan for chronic WET. In certain circumstances, accelerated WET testing and/or a Toxicity Reduction Evaluation (TRE) are required by the MRP when a WET "trigger" is exceeded. Table E-4, below, summarizes the WET testing requirements of the MRP.

[3] Composite samples for non-Ocean Plan Table B parameters may be taken by a proportional sampling device approved by the Executive Officer or by grab sample composites. In compositing grab samples, the sampling interval shall not exceed two hours. For Ocean Plan Table B parameters, a composite sample is defined as an individual sample of at least 100 milliliters collected at periodic intervals during the operating hours of the facility over a 24-hour period. For volatile constituents, aliquots shall be combined in the laboratory immediately before analysis. Aliquots may be collected manually or automatically. A grab sample is defined as an individual sample of at least 100 milliliters collected over a period not exceeding 15 minutes. Grab samples shall be collected over a shorter period if necessary to ensure that the parameter in the sample is the same as that at the sampling location at the time the sample is collected.

[4] Total residual chlorine shall be monitored daily at a point following dechlorination and prior to discharge to the Pacific Ocean (Discharge Point 001). The Discharger shall monitor total residual chlorine in the effluent continuously using a method with a reporting limit of 50 µg/L or as low as technically feasible.

Table E-4. Summary of WET Testing Requirements

Monitoring Location	WET Testing Requirement
EFF-001	Chronic WET shall be tested at least once per year during a month not previously sampled during the permit term.

A. Chronic Toxicity Testing

The Discharger shall conduct chronic toxicity testing to demonstrate compliance with the Ocean Plan's water quality objective for toxicity. The Discharger shall meet the following chronic toxicity testing requirements:

1. **Test Frequency**. The Discharger shall conduct chronic WET testing in accordance with the schedules established by this MRP, as summarized in Table E-4, above.

2. **Sample Type.** For 96-hour static renewal or 96-hour static non-renewal testing, effluent samples, from Monitoring Location EFF-001 shall be grab samples that are representative of the volume and quality of the discharge from the facility.

3. **Test Species.** Critical life stage bioassay testing shall be conducted using an approved test, and test species, as described by Table III-1 of the Ocean Plan and presented below. Initial testing shall be conducted with a vertebrate, an invertebrate, and a plant species, and thereafter, monitoring can be reduced to the most sensitive species.

Table E-5. Approved Tests—Chronic Toxicity

Species	Test	Tier [1]	Reference [2]
Giant kelp, *Macrocystis pyrifera*	percent germination; germ tube length	1	a, c
Red abalone, *Haliotis rufescens*	abnormal shell development	1	a, c
Oyster, *Crassostrea gigas*; mussels, *Mytilus spp*.	abnormal shell development; percent survival	1	a, c
Urchin, *Strongylocentrotus purpuratus*; sand dollar, *Dendraster excentricus*	percent normal development	1	a, c
Urchin, *Strongylocentrotus purpuratus*; sand dollar, *Dendraster excentricus*	percent fertilization	1	a, c
Shrimp, *Homesimysis costata*	percent survival; growth	1	a, c

DRAFT

Shrimp, *Mysidopsis bahia*	percent survival; growth; fecundity	2	b, d
Topsmelt, *Atherinops affinis*	larval growth rate; percent survival	1	a, c
Silversides, *Menidia beryllina*	larval growth rate; percent survival	2	b, d

[1] First tier methods are preferred for compliance monitoring. If first tier organisms are not available, the Discharger can use a second tier test method following approval by the Regional Water Board.

[2] Protocol References:

a. Chapman, G.A., D.L. Denton, and J.M. Lazorchak. 1995. Short-term Methods for Estimating the Chronic Toxicity of Effluents and Receiving Waters to West Coast Marine and Estuarine Organisms. U.S. EPA Report No. EPA/600/R-95/136.

b. Klemm, D.J., G.E. Morrison, T.J. Norberg-King, W.J. Peltier, and M.A. Heber. 1994. Short-term Methods for Estimating the Chronic Toxicity of Effluents and Receiving Water to Marine and Estuarine Organisms. U.S. EPA Report No. EPA-600-4-91-003.

c. SWRCB 1996. Procedures Manual for Conducting Toxicity Tests Developed by the Marine Bioassay Project. 96-1WQ.

d. Weber, C.I., W.B. Horning, I.I., D.J. Klemm, T.W. Nieheisel, P.A. Lewis, E.L. Robinson, J. Menkedick and F. Kessler (eds). 1998. Short-term Methods for Estimating the Chronic Toxicity of Effluents and Receiving Waters to Marine and Estuarine Organisms. EPA/600/4-87/028. National Information Service, Springfield, VA.

4. **Test Methods.** The presence of chronic toxicity shall be estimated as specified in USEPA's Short-Term Methods for Estimating the Chronic Toxicity of Effluents and Receiving Water to West Coast Marine and Estuarine Organisms (USEPA Report No. EPA/600/R-95/136, or subsequent editions).

5. **Test Dilutions.** Chronic WET tests on effluent samples, collected at Monitoring Location EFF-001 shall be conducted using dilutions of 1.25, 2.5, 5, 10, and 12.5 percent, and a control. Control and dilution water shall be either receiving water collected beyond the influence of the discharge or lab synthesized water. If the dilution water used is different from the culture water, a second control using culture water shall be used.

6. **Reference Toxicant.** If organisms are not cultured in-house, concurrent testing with a reference toxicant shall be conducted. Where organisms are cultured in-house, monthly reference toxicant testing is sufficient. Reference toxicant tests also shall be conducted using the same test conditions as the effluent toxicity tests (e.g., same test duration, etc).

7. **Test Failure.** If either the reference toxicant test or the chronic toxicity test does not meet all test acceptability criteria, as specified in the test method, the Discharger shall re-sample and re-test as soon as possible, not to exceed 7 days following notification of test failure.

DRAFT

8. **Accelerated Monitoring Requirements**. If the result of any chronic toxicity test exceeds a water quality objective of 51 TUc, and the testing meets all test acceptability criteria, the Discharger shall initiate accelerated monitoring. Accelerated monitoring shall consist of four additional samples – with one test conducted approximately every week over a four week period. Testing shall commence within 14 days of receipt of initial sample results which indicated an exceedance of the chronic toxicity "trigger." If the discharge will cease before the additional samples can be collected, the Discharger shall contact the Executive Officer within 21 days with a plan to address elevated levels of chronic toxicity in effluent and/or receiving water.

   The following protocol shall be used for accelerated monitoring and TRE implementation:

   a. If the results of four consecutive accelerated monitoring tests do not exceed the chronic toxicity water quality objective, the Discharger may cease accelerated monitoring and resume regular chronic toxicity monitoring. However, if there is adequate evidence of a pattern of effluent toxicity, the Regional Water Board's Executive Officer may require that the Discharger initiate a TRE.

   b. If the source(s) of the toxicity is easily identified (i.e. temporary plant upset), the Discharger shall make necessary corrections to the facility and shall continue accelerated monitoring until four (4) consecutive accelerated tests do not exceed the chronic toxicity water quality objective. Upon confirmation that the chronic toxicity has been removed, the Discharger may cease accelerated monitoring and resume regular chronic toxicity monitoring.

   c. If the result of any accelerated toxicity test exceeds the chronic toxicity water quality objective, the Discharger shall cease accelerated monitoring and initiate a TRE to investigate the cause(s) and identify corrective actions to reduce or eliminate the chronic toxicity. Within thirty (30) days of notification by the laboratory of the test results exceeding the chronic toxicity water quality objective during accelerated monitoring, the Discharger shall submit a TRE Action Plan to the Regional Water Board including, at minimum:

      (1) Specific actions the Discharger will take to investigate and identify the cause(s) of toxicity, including a TRE WET monitoring schedule;

      (2) Specific actions the Discharger will take to mitigate the impact of the discharge and prevent the recurrence of toxicity; and

      (3) A schedule for these actions.

9. **Notification.** The Discharger shall notify the Regional Water Board in writing 14 days after the receipt of test results, which indicate the exceedance of the water quality objective for chronic toxicity.

DRAFT

C. Chronic Toxicity Reporting

1. **Routine Reporting**. Test results for chronic WET tests shall be reported according to the appropriate acute and chronic guidance manuals and this Monitoring and Reporting Program and shall be attached to the self-monitoring report. Test results shall include, at a minimum, for each test:

   a. sample date(s)
   b. test initiation date
   c. test species
   d. end point values for each dilution (e.g., number of young, growth rate, percent survival)
   e. NOEC value(s) in percent effluent
   f. IC15, IC25, IC40, and IC50 values (or EC15, EC25…etc.) in percent effluent
   g. TUc values (100/NOEC)
   h. Mean percent mortality (±s.d.) after 96 hours in 100 percent effluent (if applicable)
   i. NOEC and LOEC values for reference toxicant test(s)
   j. IC50 or EC50 value(s) for reference toxicant test(s)
   k. Available water quality measurements for each test (e.g., pH, DO, temperature, conductivity, hardness, salinity, ammonia)
   l. Statistical methods used to calculate endpoints.

2. **Quality Assurance Reporting.** Because the permit requires sublethal hypothesis testing endpoints from methods 1006.0 and 1007.0 in the test methods manual titled *Short-term Methods for Estimating the Chronic Toxicity of Effluents and Receiving Waters to Marine and Estuarine Organisms* (EPA-821-R-02-014, 2002), with-in test variability must be reviewed for acceptability and variability criteria (upper and lower PMSD bounds) must be applied, as directed under section 10.2.8 – *Test Variability* of the test methods manual. Under section 10.2.8, the calculated PMSD for both reference toxicant test and effluent toxicity test results must be compared with the upper and lower PMSD bounds variability criteria specified in Table 6 – *Variability Criteria (Upper and Lower PMSD Bounds) for Sublethal Hypothesis Testing Endpoints Submitted Under NPDES Permits*, following the review criteria in paragraphs 10.2.8.2.4.1 through 10.2.8.2.4.5 of the test methods manual. Based on this review, only accepted effluent toxicity test results shall be reported.

3. **Compliance Summary**. The results of the chronic toxicity testing shall be provided in the most recent self-monitoring report and shall include a summary table organized by test species, type of test (survival, growth or reproduction) and monitoring frequency (routine, accelerated or TRE) of toxicity data from at least

DRAFT

three of the most recent samples. The final report shall clearly demonstrate that the Discharger is in compliance with Ocean Plan water quality objectives and other permit requirements.

VI. LAND DISCHARGE MONITORING REQUIREMENTS

Not applicable.

VII. RECLAMATION MONITORING REQUIREMENTS

Not applicable.

VIII. RECEIVING WATER MONITORING REQUIREMENTS – SURFACE WATER AND GROUNDWATER

A. Monitoring Location REF-001

1. **Outfall Inspection.** Divers shall visually inspect the outfall structure, including the diffuser ports, at least once during the life of this permit to verify operational status of the outfall. A report documenting outfall condition and maintenance, including any observed cracks, breaks, malfunctions, and appropriate repairs, shall be submitted within 90 days of completing the inspection and no later than **January 24, 2014**. The Discharger shall submit to the Regional Water Board Executive Officer for approval an Outfall Inspection work plan no later than **March 1, 2012.**

2. **Biological Survey.** The Discharger shall conduct a comparative evaluation of indigenous biota in the vicinity of the outfall using a qualified aquatic biologist, at least once every 5 years. The biologist shall prepare a report of observations, including objectionable aquatic growths, floating particulates or grease and oil, aesthetically undesirable discoloration of the ocean surface, color of fish or shellfish, and any evidence of degradation of indigenous biota attributable to the rate of deposition of inert solids, settleable material, nutrient materials, increased concentrations of organic materials, or increased concentrations of Ocean Plan Table B substances. The Discharger shall submit to the Regional Water Board Executive Officer for approval a Biological Survey work plan no later than **March 1, 2012** in order to complete the survey and prepare a final report by the due date for receipt of an application for permit renewal. The final report shall be submitted no later than **January 24, 2014.**

IX. OTHER MONITORING REQUIREMENTS

Not applicable.

DRAFT

X. REPORTING REQUIREMENTS

A. General Monitoring and Reporting Requirements

1. The Discharger shall comply with all Standard Provisions (Attachment D) related to monitoring, reporting, and recordkeeping.

B. Self Monitoring Reports (SMRs)

1. At any time during the term of this permit, the State or Regional Water Board may notify the Discharger to electronically submit Self-Monitoring Reports (SMRs) using the State Water Board's California Integrated Water Quality System (CIWQS) Program Web site (http://www.waterboards.ca.gov/ciwqs/index.html). Until such notification is given, the Discharger shall submit hard copy SMRs. The CIWQS Web site will provide additional directions for SMR submittal in the event there will be service interruption for electronic submittal.

2. The Discharger shall report in the SMR the results for all monitoring specified in this MRP under sections III through IX. The Discharger shall submit monthly and annual summary SMRs including the results of all required monitoring using USEPA-approved test methods or other test methods specified in this Order. If the Discharger monitors any pollutant more frequently than required by this Order, the results of this monitoring shall be included in the calculations and reporting of the data submitted in the SMR.

3. Monitoring periods and reporting for all required monitoring shall be completed according to the following schedule:

Table E-6. Monitoring Periods and Reporting Schedule

Sampling Frequency	Monitoring Period Begins On…	Monitoring Period	SMR Due Date
Continuous	July 24, 2009	All	First day of second calendar month following month of sampling
Daily	July 24, 2009	Midnight through 11:59 PM or any 24-hour period that reasonably represents a calendar day for purposes of sampling.	First day of second calendar month following month of sampling
Weekly	July 24, 2009	Sunday through Saturday	First day of second calendar month following month of sampling
Monthly	July 24, 2009	1st day of calendar month	First day of second

DRAFT

Sampling Frequency	Monitoring Period Begins On…	Monitoring Period	SMR Due Date
		through last day of calendar month	calendar month following month of sampling
Annually	July 24, 2009	January 1 through December 31	February 1
1X / Order Term	July 24, 2009	January 1 through December 31	February 1

4. Reporting Protocols. The Discharger shall report with each sample result the applicable Reporting Level (RL) and the current Method Detection Limit (MDL), as determined by the procedure in Part 136.

   The Discharger shall report the results of analytical determinations for the presence of chemical constituents in a sample using the following reporting protocols.

   a. Sample results greater than or equal to the RL shall be reported as measured by the laboratory (i.e., the measured chemical concentration in the sample).

   b. Sample results less than the RL, but greater than or equal to the laboratory's MDL, shall be reported as "Detected, but Not Quantified," or DNQ. The estimated chemical concentration of the sample shall also be reported.

      For the purposes of data collection, the laboratory shall write the estimated chemical concentration next to DNQ as well as the words "Estimated Concentration" (may be shortened to "Est. Conc."). The laboratory may, if such information is available, include numerical estimates of the data quality for the reported result. Numerical estimates of data quality may be percent accuracy (± a percentage of the reported value), numerical ranges (low to high), or any other means considered appropriate by the laboratory.

   c. Sample results less than the laboratory's MDL shall be reported as "Not Detected," or ND.

   d. Dischargers are to instruct laboratories to establish calibration standards so that the ML value (or its equivalent if there is differential treatment of samples relative to calibration standards) is the lowest calibration standard. At no time is the Discharger to use analytical data derived from extrapolation beyond the lowest point of the calibration curve.

5. The Discharger shall submit SMRs in accordance with the following requirements:

   a. The Discharger shall arrange all reported data in a tabular format. The data shall be summarized to clearly illustrate whether the facility is operating in compliance

DRAFT

with interim and/or final effluent limitations. The reported data shall include calculation of all effluent limitations that require averaging, taking of a median or other computation. The Discharger is not required to duplicate the submittal of data that is entered in a tabular format within CIWQS. When electronic submittal of data is required and CIWQS does not provide for entry into a tabular format within the system, the Discharger shall electronically submit the data in a tabular format as an attachment.

b. The Discharger shall attach a cover letter to the SMR. The information contained in the cover letter shall clearly identify:

(1) Facility name

(2) WDID number

(3) Applicable period of monitoring and reporting

(4) Violations of the WDRs (identified violations must include a description of the requirement that was violated and a description of the violation)

(5) Corrective actions taken or planned; and

(6) The proposed time schedule for corrective actions.

c. SMRs must be submitted to the Regional Water Board, signed and certified as required by the Standard Provisions (Attachment D), to the address listed below:

North Coast Regional Water Quality Control Board
5550 Skylane Blvd, Suite A
Santa Rosa, CA 95403

C. Discharge Monitoring Reports (DMRs)

1. As described in Section X.B.1 above, at any time during the term of this permit, the State or Regional Water Board may notify the Discharger to electronically submit SMRs that will satisfy federal requirements for submittal of Discharge Monitoring Reports (DMRs). Until such notification is given, the Discharger shall submit DMRs in accordance with the requirements described below.

2. DMRs must be signed and certified as required by the standard provisions (Attachment D). The Discharge shall submit the original DMR and one copy of the DMR to the address listed below:

DRAFT

Standard Mail	FedEx/UPS/ Other Private Carriers
State Water Resources Control Board Division of Water Quality c/o DMR Processing Center PO Box 100 Sacramento, CA 95812-1000	State Water Resources Control Board Division of Water Quality c/o DMR Processing Center 1001 I Street, 15th Floor Sacramento, CA 95814

3. All discharge monitoring results must be reported on the official USEPA pre-printed DMR forms (EPA Form 3320-1). Forms that are self-generated or modified cannot be accepted.

D. Other Reports

1. The Discharger shall report the results of any special studies required by Special Provisions – VI. C. 2. a. of this Order.

2. Annual Report. The Discharger shall submit an Annual Report to the Regional Water Board for each calendar year. The report shall be submitted by February 1st of the following year. The report shall, at a minimum, include the following.

   a. Both tabular and, where appropriate, graphical summaries of the monitoring data and disposal records from the previous year. If the Discharger monitors any pollutant more frequently than required by this Order, using test procedures approved under Part 136 or as specified in this Order, the results of this monitoring shall be included in the calculation and report of the data submitted with the SMR.

   b. A comprehensive discussion of the facility's compliance (or lack thereof) with all effluent limitations, and the corrective actions taken or planned, which may be needed to bring the discharge into full compliance with the Order.

   c. A summary report of source control activities completed during the calendar, in accordance with Special Provisions - VI.C.5.b of this Order

   d. A summary report, if applicable, of amount of sludge or biosolids placed in a landfill and the landfill(s) which received the sludge or biosolids, in accordance with Special Provisions - VI.C.5.c(4) of this Order.

DRAFT

ATTACHMENT F – FACT SHEET

Table of Contents

Attachment F – Fact Sheet F-3
I. Permit Information F-3
II. Facility Description F-4
A. Description of Wastewater Treatment F-4
B. Discharge Points and Receiving Waters F-5
C. Summary of Existing Requirements and Self-Monitoring Report (SMR) Data F-5
D. Compliance Summary F-6
E. Planned Changes F-7
III. Applicable Plans, Policies, and Regulations F-7
A. Legal Authorities F-7
B. California Environmental Quality Act (CEQA) F-7
C. State and Federal Regulations, Policies, and Plans F-7
D. Impaired Water Bodies on CWA 303(d) List F-10
E. Other Plans, Polices and Regulations F-10
IV. Rationale For Effluent Limitations and Discharge Specifications F-11
A. Discharge Prohibitions F-11
B. Technology-Based Effluent Limitations F-13
1. Scope and Authority F-13
2. Applicable Technology-Based Effluent Limitations F-14
C. Water Quality-Based Effluent Limitations (WQBELs) F-15
1. Scope and Authority F-15
2. Applicable Beneficial Uses and Water Quality Criteria and Objectives F-16
3. Determining the Need for WQBELs F-17
4. WQBEL Calculations F-27
5. Whole Effluent Toxicity (WET) F-29
D. Final Effluent Limitations F-31
1. Satisfaction of Anti-Backsliding Requirements F-31
2. Satisfaction of Antidegradation Policy F-31
3. Stringency of Requirements for Individual Pollutants F-31
E. Interim Effluent Limitations F-32
F. Land Discharge Specifications F-32
G. Reclamation Specifications F-32
V. Rationale for Receiving Water Limitations F-32
A. Surface Water F-32
B. Groundwater F-32
VI. Rationale for Monitoring and Reporting Requirements F-33
A. Influent Monitoring F-33
B. Effluent Monitoring F-33
C. Whole Effluent Toxicity Testing Requirements F-33
D. Receiving Water Monitoring F-34

DRAFT

1. Surface Water F-34
2. Groundwater. F-34
E. Land Discharge Monitoring F-34
F. Other Monitoring Requirements F-34
VII. Rationale for Provisions F-34
A. Standard Provisions F-34
B. Regional Water Board Standard Provisions F-34
C. Special Provisions F-35
1. Reopener Provisions F-35
2. Special Studies and Additional Monitoring Requirements F-36
3. Best Management Practices and Pollution Prevention F-37
4. Construction, Operation, and Maintenance Specifications F-37
5. Special Provisions for Municipal Facilities (POTWs Only) F-37
6. Other Special Provisions F-39
7. Compliance Schedules F-40
VIII. Public Participation F-40
A. Notification of Interested Parties F-40
B. Written Comments F-40
C. Public Hearing F-40
D. Waste Discharge Requirements Petitions F-41
E. Information and Copying F-41
F. Register of Interested Persons F-41
G. Additional Information F-41

List of Tables

Table F-1. Facility Information F-3
Table F-2. Historic Effluent Limitations and Monitoring Data F-5
Table F-3. Basin Plan Beneficial Uses for the Receiving Water F-8
Table F-4. Receiving Water Beneficial Uses Established by the Ocean Plan F-9
Table F-5. Secondary Treatment Standards F-14
Table F-6. Summary of Technology-Based Effluent Limitations F-14
Table F-7. RPA Results F-21
Table F-8. Background Concentrations—Ocean Plan F-27
Table F-9. Water Quality Objectives–Ocean Plan F-28
Table F-10. Summary of WQBELs for Ocean Plan Table B Pollutants F-29
Table F-11. Chronic Toxicity Testing Summary Results F-30

DRAFT

ATTACHMENT F – FACT SHEET

As described in section II of this Order, this Fact Sheet includes the legal requirements and technical rationale that serve as the basis for the requirements of this Order.

This Order has been prepared under a standardized format to accommodate a broad range of discharge requirements for dischargers in California. Only those sections or subsections of this Order that are specifically identified as "not applicable" have been determined not to apply to this Discharger. Sections or subsections of this Order not specifically identified as "not applicable" are fully applicable to this Discharger.

I. PERMIT INFORMATION

The following table summarizes administrative information related to the facility.

Table F-1. Facility Information

WDID	**1B84083OMEN**
Discharger	**Fort Bragg Municipal Improvement District No. 1**
Name of Facility	**City of Fort Bragg Wastewater Treatment Facility**
Facility Address	**101 West Cypress Street**
	Fort Bragg, CA 95437
	Mendocino County
Facility Contact, Title and Phone	**Alan Hodge, Treatment Superintendent, (707) 961-2834**
Authorized Person to Sign and Submit Reports	**SAME**
Mailing Address	**416 North Franklin Street, Fort Bragg CA 95437**
Billing Address	**SAME**
Type of Facility	**POTW**
Major or Minor Facility	**Major**
Threat to Water Quality	**2**
Complexity	**A**
Pretreatment Program	**N**
Reclamation Requirements	**N**
Facility Permitted Flow	**1.0 million gallons per day (mgd)**
Facility Design Flow	**1.0 mgd (average dry weather treatment capacity)** **2.2 mgd (average wet weather treatment capacity)**
Watershed	**Mendocino Coast Hydrologic Unit**
Receiving Water	**Pacific Ocean**
Receiving Water Type	**Ocean waters**

DRAFT

A. The Fort Bragg Municipal Improvement District No. 1 (hereinafter Discharger) is the owner and operator of the City of Fort Bragg Wastewater Treatment Facility (WWTF), a publicly-owned treatment works (POTW).

   For the purposes of this Order, references to the "discharger" or "permittee" in applicable federal and state laws, regulations, plans, or policy are held to be equivalent to references to the Discharger herein.

B. The WWTF discharges treated wastewater to the Pacific Ocean, a water of the United States, and is currently regulated by Order R1-2005-0096 which was adopted on October 12, 2005 and expired on March 24, 2009. The terms and conditions of the current Order have been automatically continued and remain in effect until new Waste Discharge Requirements and National Pollutant Discharge Elimination System (NPDES) permit are adopted pursuant to this Order.

C. The Discharger filed a report of waste discharge and submitted an application for renewal of its Waste Discharge Requirements (WDRs) and NPDES permit on September 18, 2008. The application was deemed complete on February 9, 2009.

II. FACILITY DESCRIPTION

The Discharger owns and operates the wastewater collection, treatment, and disposal facilities that serve a residential population of approximately 7,000 from the City of Fort Bragg and adjacent unincorporated areas. The WWTF is located at 101 West Cypress Street in Fort Bragg, Mendocino County, California. The Fort Bragg Municipal Improvement District is bounded on the north by MacKerricher State Park and by South Harbor Drive to the south.

A. Description of Wastewater Treatment

The collection system consists of approximately 30 miles of gravity pipeline and pressure mains and six pump stations (three constructed in 1970, one in 1975, one in 1987, and the last in 1989).

The WWTF has a design capacity of 1.0 mgd (average dry weather treatment capacity) and 2.2 mgd (average wet weather treatment capacity). Primary wastewater treatment includes grit removal, screening, and primary clarification. Secondary treatment consists of a two-stage biofiltration (trickling filters) process and clarification with chemical addition to enhance clarification. Treated wastewater is disinfected using liquid chlorine and dechlorinated with sulfur dioxide prior to discharge at Discharge Point 001 to the Pacific Ocean.

Sludge from the primary clarifier is pumped to a gravity thickener and then to two anaerobic digesters. Skimmings from the primary clarifier are directed to an unlined grease lagoon for drying and storage prior to final disposal in a municipal solid waste landfill. Sludge from the secondary clarifier is pumped directly to anaerobic digestion.

DRAFT

Digested primary and secondary settled sludge is dewatered to a minimum of fifteen percent solids in a gravity belt press. Additional sludge drying takes place in sludge drying beds prior to disposal or reuse. Since 2005, the dried sludge has been hauled off-site to the Redwood Landfill in Novato.

B. Discharge Points and Receiving Waters

Treated wastewater is currently discharged at Discharge Point 001 at 39° 26′ 20″ N latitude and 123° 48′ 48″ W longitude to the Pacific Ocean, via a 650-foot outfall, west of the treatment plant. The receiving water is located within the Mendocino Coast Hydrologic Unit and is a water of the United States.

C. Summary of Existing Requirements and Self-Monitoring Report (SMR) Data

1. Effluent limitations contained in the existing Order for discharges from Discharge Point 001 and representative monitoring data from the term of the previous Order are presented in Table F-2.

Table F-2. Historic Effluent Limitations and Monitoring Data

Parameter	Units	Effluent Limitation			Monitoring Data (From 3/2004 – 8/2008)		
		Average Monthly	Average Weekly	Maximum Daily	Highest Average Monthly Discharge	Highest Average Weekly Discharge	Highest Daily Discharge
Discharge Point 001 – Conventional and Nonconventional Pollutants							
Flow	mgd	---	---	---	2.11	---	---
BOD_5	mg/L	30	45	---	34.6	51	51
Percent Removal, BOD_5	%	≥ 85	---	---	Minimum – 86% Removal		
TSS	mg/L	30	45	---	34.2	45	45
Percent Removal, TSS	%	≥ 85	---	---	Minimum – 79% Removal[1]		
Settleable Solids	mL/L/hr	1.0	1.5	3.0	0.3	0.3	0.3
Grease and Oil	mg/L	25	40	75	18	18	18
Turbidity	NTU	75	100	225	33	42	56

[1] This value represents the lowest reported value of the minimum percent removal of the pollutant. The Discharger violated the minimum percent removal requirement once during the permit term (January 2005).

DRAFT

Parameter	Units	Effluent Limitation			Monitoring Data (From 3/2004 – 8/2008)		
		Average Monthly	Average Weekly	Maximum Daily	Highest Average Monthly Discharge	Highest Average Weekly Discharge	Highest Daily Discharge
pH	s.u.	6.0 – 9.0 at all times			Minimum – 5.7, Maximum – 9.7		
Total Coliform Bacteria	MPN/100 mLs	70[2]	---	230[3]	19	---	280
Discharge Point 001 – Toxic Pollutants							
Ammonia (as N)	mg/L	31	122	306	29	29	29
Copper	µg/L	53	512	1,430	73	100	100
Cyanide	µg/L	51	204	510	All ND (<20)	All ND (<20)	All ND (<20)

D. Compliance Summary

On January 29, 2007, the Executive Officer issued Cleanup and Abatement Order No. R1-2007-0011 for violations and threatened violations of WDR Order No. R1-2005-0096, and for violations of prohibitions contained in the Basin Plan, and for the ongoing threats to water quality and public health posed by sanitary sewer overflows resulting from the pressurized-sewer leaks and deteriorated condition of the Pudding Creek Force Main. To minimize the potential for future pipeline failures along the Pudding Creek Beach, the Regional Water Board adopted Cease and Desist Order No. R1-2007-0015 on April 26, 2007, directing the Discharger to permanently repair or replace compromised sections of the Force Main. The Order included a time schedule for system upgrades, environmental review, securing funding, and construction of the project by October 1, 2009. The project was completed on December 3, 2008.

On November 16, 2007, the Executive Officer issued Administrative Civil Liability Complaint No. R1-2007-0120 for for violations of WDR Order Nos. 95-47, R1-2004-0009 and R1-2005-0096 and Order No. 2006-0003-DWQ, Statewide General Waste Discharge Requirements for Sanitary Sewer Systems. Mandatory minimum penalties of $6,000 were proposed for violations of effluent limitations that occurred from May 14, 2004 through October 31, 2007, and are subject to the mandatory minimum penalties provision contained in Water Code section 13385, subdivisions (h) and (i). Additional discretionary penalties of $50,000 were proposed for thirteen prohibited SSOs and ten other unpermitted discharge events occurring during the period from January 1, 2003

[2] Expressed as a 30-day median.
[3] Not more than 10 percent of samples collected in a 30-day period shall exceed 230 MPN/100 mL.

through October 31, 2007. Eleven of the thirteen SSOs and all ten of the other discharge events resulted in discharges to receiving waters and public use beach shorelines tributary to the Pacific Ocean. In lieu of paying the full amount of the penalty, the Discharger agreed to complete a Supplemental Environmental Project (SEP) in an amount up to $35,500 and pay the balance of the penalty, which is $20,500, to the State's Cleanup and Abatement Account. The SEP was completed in conjunction with the Pudding Creek Force Main Replacement Project on December 3, 2008, in compliance with Administrative Civil Liability Order No. R1-2008-0070, adopted by the Regional Water Board on July 24, 2008.

E. Planned Changes

There are no changes in operation or modifications to facilities planned for the Facility, during the anticipated term of this Order, which will cause a material change in the volume or quality of discharges from the facility.

III. APPLICABLE PLANS, POLICIES, AND REGULATIONS

The requirements contained in the proposed Order are based on the requirements and authorities described in this section. This section provides supplemental information, where appropriate, for the plans, policies, and regulations relevant to the discharge.

A. Legal Authorities

This Order is issued pursuant to section 402 of the federal Clean Water Act (CWA) and implementing regulations adopted by the U.S. Environmental Protection Agency (USEPA) and chapter 5.5, division 7 of the California Water Code (commencing with section 13370). It shall serve as a NPDES permit for point source discharges from this facility to surface waters. This Order also serves as Waste Discharge Requirements (WDRs) pursuant to article 4, chapter 4, division 7 of the Water Code (commencing with section 13260).

B. California Environmental Quality Act (CEQA)

Under Water Code section 13389, this action to adopt an NPDES permit is exempt from the provisions of CEQA, Public Resources Code sections 21100 through 21177.

C. State and Federal Regulations, Policies, and Plans

1. **Water Quality Control Plans.** The Regional Water Quality Control Board (Regional Water Board) adopted a *Water Quality Control Plan for the North Coast Region* (hereinafter Basin Plan) that designates beneficial uses, establishes water quality objectives, and contains implementation programs and policies to achieve those objectives for all waters addressed through the plan. In addition, the Basin Plan implements State Water Resources Control Board (State Water Board) Resolution No. 88-63, which establishes State policy that all waters, with certain exceptions, should be considered suitable or potentially suitable for municipal or domestic supply

DRAFT

(MUN). With total dissolved solids concentrations much greater than 3,000 mg/L, ocean waters meet an exception to State Water Board Resolution No. 88-63; and therefore, the MUN designation is not applicable to the ocean receiving water for this Discharger. Beneficial uses applicable to the Pacific Ocean for discharges from the City of Fort Bragg WWTF are described in Table F-3 below.

Table F-3. Basin Plan Beneficial Uses for the Receiving Water

Discharge Point	Receiving Water	Beneficial Use(s)
001	Pacific Ocean	Existing: • Navigation (NAV) • Water Contact Recreation (REC-1) • Non-Contact Water Recreation (REC-2) • Commercial and Sport Fishing (COMM) • Wildlife Habitat (WILD) • Rare, Threatened or Endangered Species (RARE) • Migration of Aquatic Organisms (MIGR) • Spawning, Reproduction, and/or Early Development (SPWN) • Shellfish Harvesting (SHELL) • Marine Habitat (MAR) • Aquaculture (AQUA) Potential: • Industrial Service Supply (IND) • Industrial Process Supply (PRO) • Area of Special Biological Significance (ASBS)

Requirements of this Order implement the Basin Plan.

2. **Thermal Plan.** The State Water Board adopted a Water Quality Control Plan for Control of Temperature in the Coastal and Interstate Water and Enclosed Bays and Estuaries of California (Thermal Plan) on May 18, 1972, and amended this plan on September 18, 1975. Requirements of this Order implement the Thermal Plan.

3. **California Ocean Plan.** The State Water Board adopted the *Water Quality Control Plan for Ocean Waters of California* (Ocean Plan) in 1972 and amended it in 1978, 1983, 1988, 1990, 1997, 2000, and 2005. The State Water Board adopted the latest amendment on April 21, 2005 and it became effective on February 14, 2006. The Ocean Plan is applicable, in its entirety, to point source discharges to the Pacific Ocean. The Ocean Plan identifies the following beneficial uses of ocean waters of the State.

DRAFT

Table F-4. Receiving Water Beneficial Uses Established by the Ocean Plan

Discharge Point	Receiving Water	Beneficial Uses
001	Pacific Ocean	• Water Contact and Non-Contact Recreation, including Aesthetic Enjoyment • Navigation • Commercial and Sport Fishing • Rare and Endangered Species • Marine Habitat • Shellfish Harvesting • Mariculture • Fish Migration • Fish Spawning • Preservation of Designated Areas of Special Biological Significance

In order to protect the beneficial uses, the Ocean Plan establishes water quality objectives and a program for implementation. Requirements of this Order implement the Ocean Plan.

4. **Alaska Rule.** On March 30, 2000, USEPA revised its regulation that specifies when new and revised state and tribal water quality standards (WQS) become effective for CWA purposes (40 CFR 131.21; 65 Fed. Reg. 24641 (April 27, 2000).) Under the revised regulation (also known as the Alaska Rule), new and revised standards submitted to USEPA after May 30, 2000, must be approved by USEPA before being used for CWA purposes. The final rule also provides that standards already in effect and submitted to USEPA by May 30, 2000, may be used for CWA purposes, whether or not approved by USEPA.

5. **Antidegradation Policy.** Section 131.12 requires that the state water quality standards include an antidegradation policy consistent with the federal policy. The State Water Board established California's antidegradation policy in State Water Board Resolution No. 68-16. Resolution No. 68-16 incorporates the federal antidegradation policy where the federal policy applies under federal law. Resolution No. 68-16 requires that existing water quality be maintained unless degradation is justified based on specific findings. The Regional Water Board's Basin Plan implements, and incorporates by reference, both the State and federal antidegradation policies. The permitted discharges are consistent with the antidegradation provision of section 131.12 and State Water Board Resolution No. 68-16.

DRAFT

6. **Anti-Backsliding Requirements.** Sections 402(o)(2) and 303(d)(4) of the CWA and federal regulations at title 40, Code of Federal Regulations[4] section 122.44(l) prohibit backsliding in NPDES permits. These anti-backsliding provisions require that effluent limitations in a reissued permit must be as stringent as those in the previous permit, with some exceptions in which limitations may be relaxed.

D. Impaired Water Bodies on CWA 303(d) List

The USEPA approved the State's 2006 303(d) list of impaired water bodies on December 26, 2006. The coastal waters which are the receiving waters for this Discharger are not listed on the 303(d) list as being impaired.

E. Other Plans, Polices and Regulations

1. On May 2, 2006, the State Water Board adopted State Water Board Order 2006-0003-DWQ, Statewide General WDRs for Sanitary Sewer Systems. Order No. 2006-0003-DWQ requires that all public agencies that currently own or operate sanitary sewer systems apply for coverage under the General WDRs. The deadline for dischargers to apply for coverage was November 2, 2006. The Discharger applied for coverage and is subject the requirements of Order No. 2006-0003-DWQ and any future revisions thereto for operation of its wastewater collection system.

2. On April 17, 1997, the State Water Board adopted State Water Board Water Quality Order No. 97-03-DWQ, NPDES General Permit No. CAS000001, Waste Discharge Requirements for Discharges of Storm Water Associated with Industrial Activities Excluding Construction Activities. The Discharger has storm water discharges associated with industrial activities, category "ix" as defined in 40 CFR 122.26(b)(14). Accordingly, the Discharger shall seek coverage under State Water Board Water Quality Order 97-03-DWQ.

3. On July 22, 2004, the State Water Board adopted State Water Board Order No. 2004-0012-DWQ, General Waste Discharge Requirements for the Discharge of Biosolids to Land for Use as a Soil Amendment in Agricultural, Silvicultural, Horticultural, and Land Reclamation Activities. Should the Discharger choose to discharge biosolids to land for use as soil amendment, the Order requires the Discharger to first obtain coverage under Order No. 2004-0012-DWQ prior to the discharge.

4. The discharge of waste other than hazardous waste to land for treatment, storage and disposal in waste management units is regulated pursuant to Title 27, California Code of Regulations, except when expressly exempted. With respect to domestic sewage, Section 20090 of title 27 specifies the available exemption as follows:

[4] All further statutory references are to title 40 of the Code of Federal Regulations unless otherwise indicated.

> Exemptions. (C15: §2511): The following activities shall be exempt from the SWRCB-promulgated provisions of this subdivision, so long as the activity meets, and continues to meet, all preconditions listed: (a) Sewage—Discharges of domestic sewage or treated effluent which are regulated by WDRs issued pursuant to Chapter 9, Division 3, Title 23 of this code, or for which WDRs have been waived, and which are consistent with applicable water quality objectives, and treatment or storage facilities associated with municipal wastewater treatment plants, provided that residual sludges or solid waste from wastewater treatment facilities shall be discharged only in accordance with the applicable SWRCB-promulgated provisions of this division.

The applicable provisions of division 2 (Solid Waste) include prescriptive waste containment unit siting criteria, waste unit construction standards, and liner requirements. The waste containment unit for grease at the WWTF has been permitted for use since the commencement of the operation of the WWTF in 1982, but is, nevertheless, not compliant with the provisions of title 27. The Regional Water Board is in the process of taking enforcement action to require the Discharger to take corrective action to bring its solids handling and storage program into compliance with applicable state regulations.

IV. RATIONALE FOR EFFLUENT LIMITATIONS AND DISCHARGE SPECIFICATIONS

The CWA requires point source dischargers to control the amount of conventional, non-conventional, and toxic pollutants that are discharged into the waters of the United States. The control of pollutants discharged is established through effluent limitations and other requirements in NPDES permits. There are two principal bases for effluent limitations in the Code of Federal Regulations: section 122.44(a) requires that permits include applicable technology-based limitations and standards; and section 122.44(d) requires that permits include water quality-based effluent limitations to attain and maintain applicable numeric and narrative water quality criteria to protect the beneficial uses of the receiving water.

A. Discharge Prohibitions

The discharge prohibitions established by the Order are based on requirements of the Basin Plan and the California Water Code, including its implementing regulations; State Water Board plans and policies, as well as prohibitions and conditions that were established by the previous permit for the City of Fort Bragg WWTF. Specific rationale for each discharge prohibition is discussed below.

1. **Discharge Prohibition III.A.** The discharge of any waste not disclosed by the Discharger or not within the reasonable contemplation of the Regional Water Board is prohibited.

   This prohibition is retained from the previous Order (Order No. R1-2005-0096) and is based on the Basin Plan, and State Water Board Order WQO 2002-0012 regarding the petition of WDRs Order No. 01-072 for the East Bay Municipal Utility District and

Bay Area Clean Water Agencies. In State Water Board Order No. WQO 2002-0012, the State Water Board found that this prohibition is acceptable in Orders, but should be interpreted to apply only to constituents that are either not disclosed by the Discharger, or are not reasonably anticipated to be present in the discharge but have not been disclosed by the Discharger. It specifically does not apply to constituents in the discharge that do not have "reasonable potential" to exceed water quality objectives.

The State Water Board has stated that the only pollutants not covered by this prohibition are those which were "disclosed to the Ordering and … can be reasonably contemplated." [In re the Petition of East Bay Municipal Utilities District et al., (State Water Board, 2002) Order No. WQO 2002-0012, p. 24] In that Order, the State Water Board cited a case which held the Discharger is liable for discharge of pollutants not "within the reasonable contemplation of the permitting authority…, whether spills or otherwise,…" [Piney Run Preservation Assn. v. County Commissioners of Carroll County, Maryland (4th Cir. 2001) 268 F. 3d 255, 268.] Thus the State Water Board authority provides that, to be permissible, the constituent discharged (1) must have been disclosed by the Discharger and (2) can be reasonably contemplated by the Regional Water Board.

Whether or not the Discharger reasonably contemplates the discharge of a constituent is not relevant. What matters is whether the Discharger disclosed the constituent to the Regional Water Board or whether the presence of the pollutant in the discharge can otherwise be reasonably contemplated by the Regional Water Board at the time of Order adoption.

2. **Discharge Prohibition III.B.** Creation of pollution, contamination, or nuisance, as defined by Section 13050 of the California Water Code is prohibited.

   This prohibition is retained from the previous Order (Order No. R1-2005-0096) and is based on section 13050 of the Water Code.

3. **Discharge Prohibition III.C.** The discharge of sludge or digester supernatant is prohibited, except as authorized under section VI.C.5.c. (Solids Disposal and Handling Requirements, section VI.C.5.c of the Order.)

   This prohibition is is retained from the previous Order (Order No. R1-2005-0096) and is based in restrictions on the disposal of sewage sludge found in federal regulations [Part 503 (Biosolids), Part 527 and Part 258] and Title 27 of the California Code of Regulations (CCR).

4. **Discharge Prohibition III.D.** The discharge of untreated or partially treated waste from anywhere within the collection, treatment, or disposal systems is prohibited, except as provided for in Prohibition III. E. and in Attachment D, Standard Provisions (Bypass).

DRAFT

This prohibition has been retained from the previous Order (Order No. R1-2005-0096) and is based on the Basin Plan to protect beneficial uses of the receiving water from unpermitted discharges, and the intent of the CWC sections 13260 through 13264 relating to the discharge of waste to waters of the State without filing for and being issued an Order. This prohibition applies to spills not related to sanitary sewer overflows (SSOs) and other unauthorized discharges of wastewater within the collection, treatment, and disposal facilities. The discharge of untreated or partially treated wastewater from the collection, treatment, or disposal facility represents an unauthorized bypass pursuant to section 122.41(m) or an unauthorized discharge which poses a threat to human health and/or aquatic life, and therefore is explicitly prohibited by this Order.

5. **Discharge Prohibition III.E.** The discharge of waste to land that is not under the control of the Discharger is prohibited, except as authorized under section VI.C.5.c (Solids Disposal and Handling).

   This prohibition has been retained from the previous Order (Order No. R1-2005-0096) and is based on sections 13260 through 13264 of the Water Code.

6. **Discharge Prohibition III.F.** The mean daily dry weather flow to the City of Fort Bragg WWTF in excess of 1.0 mgd measured over a period of 30 consecutive days is prohibited.

   This prohibition to limit the mean daily dry weather flow to the dry weather design flow stated in the Report of Waste Discharge has been retained from the previous Order (Order No. R1-2005-0096) and is based on the engineering design and historic reliable treatment capacity of the WWTF.

7. **Discharge Prohibition III.I.** Discharge of any radiological, chemical, or biological warfare warfare agent, or high-level radioactive waste into the ocean is prohibited.

   This prohibition is newly established by this Order and is based on the Ocean Plan.

8. **Discharge Prohibition III.J.** Discharge of sludge directly into the ocean or into a waste stream that discharges to the ocean is prohibited.

   This prohibition is newly established by the Order and is based on the Ocean Plan.

B. Technology-Based Effluent Limitations

1. Scope and Authority

Section 301(b) of the CWA and implementing USEPA permit regulations at section 122.44, title 40 of the Code of Federal Regulations, require that permits include conditions meeting applicable technology-based requirements at a minimum, and any more stringent effluent limitations necessary to meet applicable water quality

DRAFT

standards. The discharge authorized by this Order must meet minimum federal technology-based requirements based on Secondary Treatment Standards at Part 133 and/ or Best Professional Judgment (BPJ) in accordance with Part 125, section 125.3.

At section 133.102 the Secondary Treatment Standards establish the following minimum level of effluent quality attainable by secondary treatment, which the Regional Water Board must include as effluent limitations in permits issued to POTWs.

Table F-5. Secondary Treatment Standards

Parameter	Effluent Quality	
	30 Day Average	7 Day Average
BOD_5	30 mg/L	45 mg/L
TSS	30 mg/L	45 mg/L
BOD_5 and TSS	The 30 day average percent removal for BOD_5 and TSS shall not be less than 85 percent.	
pH	6.0 – 9.0 at all times	

In addition, the State Water Board, in Table A of the Ocean Plan, has established technology-based requirements, applicable to all POTWs, for oil and grease, suspended and settleable solids, turbidity, and pH.

2. Applicable Technology-Based Effluent Limitations

Technology-based limitations established for Discharge Point 001 are summarized in the following table.

Table F-6. Summary of Technology-Based Effluent Limitations

Parameter	Units	Effluent Limitations		
		Average Monthly	Average Weekly	Maximum Daily
Flow	mgd	1.0	---	---
Biochemical Oxygen Demand, 5-day @ 20°C (BOD_5)	mg/L	30	45	---
	lbs/day[5]	250	375	
	lbs/day[6]	550	825	
Total Suspended Solids	mg/L	30	45	---

[5] Mass-based limitations are based on the average dry weather design flow of the WWTF of 1.0 mgd.
[6] These alternate mass-based limitations apply during periods of high infiltration/inflow when influent flow to the WWTF exceed 1.0 mgd for the limitation period (weekly, or monthly), and are based on the secondary wet weather treatment capacity of the WWTF (2.2 mgd).

Parameter	Units	Effluent Limitations		
		Average Monthly	Average Weekly	Maximum Daily
(TSS)	lbs/day[5]	250	375	
	lbs/day[6]	550	825	---
pH	standard units	Not less than 6.0 nor greater than 9.0		
Settleable Solids	mL/L-hr	1.0	1.5	3.0
Oil and Grease	mg/L	25	40	75
Turbidity	NTU	75	100	225

Numeric effluent limitations for BOD_5, TSS, including the percent removal requirement, and for pH are retained from the previous permit and reflect secondary treatment standards at Part 133. Numeric effluent limitations for oil and grease, settleable solids, and turbidity are established by this Order, and are based in Table A of the Ocean Plan. Ocean Plan Table A effluent limitations reflect the minimum level of treatment acceptable under the Plan, and define reasonable treatment and waste control technology.

In addition, section 122.45 (f) requires the establishment of mass-based effluent limitations for all pollutants limited in Orders, except, 1) for pH, temperature, radiation, or other pollutants which cannot appropriately be expressed by mass, and (2) when applicable standards and limitations are expressed in terms of other units of measure. Pollutants limited in terms of mass additionally may be limited in terms of other units of measurement. Mass based limitations are based on the facility average dry weather design flow of 1.0 mgd and the average wet weather treatment capacity of 2.2 mgd. Mass-based limits are required pursuant to section 122.45(f) for the purpose of assuring that dilution is not used as a method of achieving the concentration limitations in the permit.

The flow limitation of the previous Order (1.0 mgd) for Discharge Point 001 has been retained and is consistent with the Report of Waste Discharge.

C. Water Quality-Based Effluent Limitations (WQBELs)

1. Scope and Authority

Section 301(b) of the CWA and section 122.44(d) require that permits include limitations more stringent than applicable federal technology-based requirements where necessary to achieve applicable water quality standards. This Order contains requirements more stringent than secondary treatment requirements that are necessary to meet applicable water quality standards.

DRAFT

Section 122.44(d)(1)(i) mandates that permits include effluent limitations for all pollutants that are or may be discharged at levels that have the reasonable potential to cause or contribute to an exceedance of a water quality standard, including numeric and narrative objectives within a standard. A reasonable potential analysis (RPA) demonstrated reasonable potential for discharges from the City of Fort Bragg WWTF to cause or contribute to exceedances of applicable water quality criteria for copper and zinc at Discharge Point 001.

Where reasonable potential has been established for a pollutant, but there is no numeric criterion or objective for the pollutant, water quality-based effluent limitations (WQBELs) must be established using: (1) USEPA criteria guidance under CWA section 304(a), supplemented where necessary by other relevant information; (2) an indicator parameter for the pollutant of concern; or (3) a calculated numeric water quality criterion, such as a proposed state criterion or policy interpreting the state's narrative criterion, supplemented with other relevant information, as provided in section 122.44(d)(1)(vi).

The process for determining reasonable potential and calculating WQBELs when necessary is intended to protect the designated uses of the receiving water as specified in the Basin Plan, and achieve applicable water quality objectives and criteria that are contained in other state plans and policies, or any applicable water quality criteria contained in the CTR and NTR.

2. Applicable Beneficial Uses and Water Quality Criteria and Objectives

a. Beneficial Uses. Beneficial uses established by the Basin Plan and Ocean Plan, applicable to the coastal receiving waters for discharges from the Fort Bragg WWTF, are described in the findings of the Order and in section III. C. 1 and 3 of this Fact Sheet. Water quality objectives, applicable to these receiving waters, are established by the Basin Plan and the Ocean Plan and include the water quality objectives for toxic pollutants established in Table B of the Ocean Plan.

b. Basin Plan Water Quality Objectives. In addition to the specific water quality objectives indicated above, the Basin Plan contains narrative objectives for color, tastes and odors, floating material, suspended material, settleable material, oil and grease, biostimulatory substances, sediment, turbidity, pH, dissolved oxygen, bacteria, temperature, toxicity, pesticides, chemical constituents, and radioactivity that apply to inland surface waters, enclosed bays, and estuaries.

c. California Ocean Plan. Water quality objectives applicable to discharges at Discharge Point 001 include the water quality objectives set out in Table A for "Major Wastewater Constituents and Properties" and for toxic pollutants established in Table B of the Ocean Plan.

DRAFT

3. Determining the Need for WQBELs

a. Non-Table B Water Quality Objectives

i. Total Coliform Bacteria.

The Ocean Plan includes bacterial objectives for ocean waters used for water contact recreation and shellfish harvesting. For total and fecal coliform bacteria and the enterococcus group of bacteria, water contact standards must be met within a zone bounded by the shoreline and a distance of 1,000 feet from the shoreline or the 30-foot depth contour, whichever is further from the shoreline. Shellfish harvesting standards for total coliform bacteria must be maintained throughout the water column. In lieu of receiving water bacterial monitoring, the Discharger has been required since 1995 (in WDR No. 95-47) to meet the most stringent water quality standards, shellfish harvesting standards, at end-of-pipe.

Regional Water Board staff has determined that there is a reasonable potential that the discharge can cause or contribute to exceedances of bacterial water quality objective for shellfish harvesting. This determination is based on the following of factors:

1. Conditions are suitable for shellfish to be present in the vicinity of the outfall. According to the 1973 Ocean Plan Technical Report prepared for the City of Fort Bragg, “the intertidal waters of the Fort Bragg cove support an abundant and varied array of flora and fauna.” A biological investigation described in the Report confirmed the presence mussels (*Mytilus californianus*) in the vicinity of the discharge.

2. The Ocean Plan’s specifies that shellfish standards shall be maintained throughout the water column (i.e., without credit for dilution);

3. Total coliform bacteria have been shown to be present in the WWTF’s discharge in concentrations exceeding the Ocean Plan shellfish standards. For the period from January 2004 through December 2008, the maximum reported effluent concentration of total coliform was greater than 1,600 MPN per 100 ml.

4. The Permittee collects the effluent grab samples only once per week, presenting an incomplete representation of the daily effluent quality;

5. Recent receiving water monitoring data are not available for the area in the vicinity of the discharge; and

6. Currently, public access to offshore areas surrounding the facility’s outfall is open and unrestricted. Members of the public wishing to harvest shellfish in

DRAFT

this area can approach by boat and collect shellfish in accordance with state regulations. Public access to the shoreline area in the vicinity of the discharge is reasonably expected to increase with the redevelopment of the 400-acre Georgia-Pacific property that is adjacent to the treatment facility. The change in use of the previously restricted Georgia-Pacific property can reasonably be expected to result in increased body contact recreation and shellfish harvesting opportunities for the public.

In accordance with the Ocean Plan, the disinfected effluent discharged through Discharge Points 001 shall not contain concentrations of total coliform bacteria, as measured at Monitoring Location EFF-001, exceeding the following limitations:

(1) The median concentration shall not exceed a Most Probable Number (MPN) of 70 per 100 mL for a calendar month.

(2) Not more than 10 percent of samples shall exceed an MPN of 230 per 100 mL, using bacteriological results from ten consecutive samples.

These effluent limitations can reasonably be expected to be achieved with the facility's existing facilities and will ensure that bacterial standards for both shellfish harvesting and water contact recreation are maintained throughout the water column.

b. Table B Water Quality Objectives

Procedures for performing a Reasonable Potential Analysis (RPA) for ocean dischargers are described in Section III. C. and Appendix VI of the Ocean Plan. In general, the procedure is a statistical method that projects an effluent data set while taking into account the averaging period of water quality objectives, the long term variability of pollutants in the effluent, limitations associated with sparse data sets, and uncertainty associated with censored data sets. The procedure assumes a lognormal distribution of the effluent data set, and compares the 95th percentile concentration at 95 percent confidence of each Table B pollutant, accounting for dilution, to the applicable water quality criterion. The RPA results in one of three following endpoints.

Endpoint 1 – There is "reasonable potential," and a WQBEL and monitoring are required.

Endpoint 2 - There is no "reasonable potential." WQBELs are not required, and monitoring is required at the discretion of the Regional Water Board.

Endpoint 3 - The RPA is inconclusive. Existing WQBELs are retained, and monitoring is required.

The State Water Resources Control Board has developed a reasonable potential calculator, which is available at http://www.waterboards.ca.gov/plnspols/docs/oplans/rpcalc.zip. The calculator (RPcalc 2.0) was used in the development of this Order and considers several pathways in the determination of reasonable potential.

i. First Path

If available information about the receiving water or the discharge supports a finding of reasonable potential without analysis of effluent data, the Regional Water Board may decide that WQBELs are necessary after a review of such information. Such information may include: the facility or discharge type, solids loading, lack of dilution, history of compliance problems, potential toxic effects, fish tissue data, 303 (d) status of the receiving water, or the presence of threatened or endangered species or their critical habitat, or other information.

ii. Second Path

If any pollutant concentration, adjusted to account for dilution, is greater than the most stringent applicable water quality objective, there is reasonable potential for that pollutant.

iii. Third Path

If the effluent data contains 3 or more detected and quantified values (i.e., values that are at or above the ML), and all values in the data set are at or above the ML, a parametric RPA is conducted to project the range of possible effluent values. The 95th percentile concentration is determined at 95 percent confidence for each pollutant, and compared to the most stringent applicable water quality objective to determine reasonable potential. A parametric analysis assumes that the range of possible effluent values is distributed lognormally. If the 95th percentile value is greater than the most stringent applicable water quality objective, there is reasonable potential for that pollutant.

iv. Fourth Path

If the effluent data contains 3 or more detected and quantified values (i.e., values that are at or above the ML), but at least one value in the data set is less than the ML, a parametric RPA is conducted according to the following steps.

(1) If the number of censored values (those expressed as a “less than” value) account for less than 80 percent of the total number of effluent values, calculate the M_L (the mean of the natural log of transformed data) and S_L

(the standard deviation of the natural log of transformed data) and conduct a parametric RPA, as described above for the Third Path.

(2) If the number of censored values account for 80 percent or more of the total number of effluent values, conduct a non-parametric RPA, as described below for the Fifth Path. (A non-parametric analysis becomes necessary when the effluent data is limited, and no assumptions can be made regarding its possible distribution.)

v. Fifth Path

A non-parametric RPA is conducted when the effluent data set contains less than 3 detected and quantified values, or when the effluent data set contains 3 or more detected and quantified values but the number of censored values accounts for 80 percent or more of the total number of effluent values. A non-parametric analysis is conducted by ordering the data, comparing each result to the applicable water quality objective, and accounting for ties. The sample number is reduced by one for each tie, when the dilution-adjusted method detection limit (MDL) is greater than the water quality objective. If the adjusted sample number, after accounting for ties, is greater than 15, the pollutant has no reasonable potential to exceed the water quality objective. If the sample number is 15 or less, the RPA is inconclusive, monitoring is required, and any existing effluent limits in the expiring permit are retained.

The following table presents the results of the RPA, performed in accordance with procedures described by the Ocean Plan, for the City of Fort Bragg WWTF. Here, the RPA was conducted using effluent monitoring data generated during monitoring events between November 2003 and August 2008.

The RPA endpoint for each Table B pollutant is identified. As shown in the following table, the RPA commonly leads to Endpoint 3, meaning that the RPA is inconclusive, when a majority of the effluent data is reported as ND (not detected). In these circumstances, the Regional Water Board views the “inconclusive” result as an indication of no concern for a particular pollutant; however, additional monitoring will be required for those pollutants during the term of the reissued permit.

The RPA showed “reasonable potential” for copper and zinc; and therefore effluent limitations for these pollutants are required for Discharge Point 001. In addition, reasonable potential was determined for total residual chlorine, as the Discharger uses chlorine for effluent disinfection.

DRAFT

Table F-7. RPA Results

Table B Pollutant	Most Stringent WQO (µg/L)	No. of Samples	No. of Non-Detects	Max Effluent Conc. (µg/L)	RPA Result, Comment
Objectives for Protection of Marine Aquatic Life					
Ammonia (as N)	600	44	0	24	Endpoint 2 – An effluent limitation is not required for this pollutant. Monitoring may be required as appropriate.
Arsenic	8	5	5	ND	Endpoint 3 – RPA is inconclusive. Less than 3 detects or greater than 80% ND.
Cadmium	1	5	5	ND	Endpoint 3 – RPA is inconclusive. Less than 3 detects or greater than 80% ND.
Chlorinated Phenolics	1	1	1	ND	Endpoint 3 – RPA is inconclusive. Less than 3 detects or greater than 80% ND.
Chromium (VI)	2	5	5	ND	Endpoint 3 – RPA is inconclusive. Less than 3 detects or greater than 80% ND.
Copper	3	53	19	100	Endpoint 1 – An effluent limitation must be developed for this pollutant. Monitoring is required.
Cyanide	1	45	45	ND	Endpoint 3 – RPA is inconclusive. Less than 3 detects or greater than 80% ND.
Endosulfan (total)	0.009	1	1	ND	Endpoint 3 – RPA is inconclusive. Less than 3 detects or greater than 80% ND.
Endrin	0.002	1	1	ND	Endpoint 3 – RPA is inconclusive. Less than 3 detects or greater than 80% ND.
HCH	0.004	1	1	ND	Endpoint 3 – RPA is inconclusive. Less than 3 detects or greater than 80% ND.
Lead	2	5	5	ND	Endpoint 3 – RPA is inconclusive. Less than 3 detects or greater than 80% ND.
Mercury	0.04	2	2	ND	Endpoint 3 – RPA is inconclusive. Less than 3 detects or greater than 80% ND.
Nickel	5	5	5	ND	Endpoint 3 – RPA is inconclusive. Less than 3 detects or greater than 80% ND.

DRAFT

Table B Pollutant	Most Stringent WQO (µg/L)	No. of Samples	No. of Non-Detects	Max Effluent Conc. (µg/L)	RPA Result, Comment
Non-chlorinated Phenolics	30	1	1	ND	Endpoint 3 – RPA is inconclusive. Less than 3 detects or greater than 80% ND.
Selenium	15	5	5	ND	Endpoint 3 – RPA is inconclusive. Less than 3 detects or greater than 80% ND.
Silver	0.7	5	4	0.79	Endpoint 3 – RPA is inconclusive. Less than 3 detects or greater than 80% ND.
Zinc	20	5	0	340	Endpoint 1 – An effluent limitation must be developed for this pollutant. Monitoring is required.
Objectives for Protection of Human Health – Noncarcinogens					
1,1,1-Trichloroethane	540000	1	1	ND	Endpoint 3 – RPA is inconclusive. Less than 3 detects or greater than 80% ND.
2,4-Dinitrophenol	4.0	1	1	ND	Endpoint 3 – RPA is inconclusive. Less than 3 detects or greater than 80% ND.
2-Methyl-4,6-Dinitrophenol	220	1	1	ND	Endpoint 3 – RPA is inconclusive. Less than 3 detects or greater than 80% ND.
Acrolein	220	1	1	ND	Endpoint 3 – RPA is inconclusive. Less than 3 detects or greater than 80% ND.
Antimony	1200	4	4	ND	Endpoint 3 – RPA is inconclusive. Less than 3 detects or greater than 80% ND.
Bis(2-Chloroethoxy)Methane	4.4	1	1	ND	Endpoint 3 – RPA is inconclusive. Less than 3 detects or greater than 80% ND.
Bis(2-Chloroisopropyl)Ether	1200	1	1	ND	Endpoint 3 – RPA is inconclusive. Less than 3 detects or greater than 80% ND.
Chlorobenzene	570	1	1	ND	Endpoint 3 – RPA is inconclusive. Less than 3 detects or greater than 80% ND.
Chromium (III)	190000	5	5	ND	Endpoint 3 – RPA is inconclusive. Less than 3 detects or greater than 80% ND.

DRAFT

Table B Pollutant	Most Stringent WQO (µg/L)	No. of Samples	No. of Non-Detects	Max Effluent Conc. (µg/L)	RPA Result, Comment
Dichlorobenzenes	5100	1	1	ND	Endpoint 3 – RPA is inconclusive. Less than 3 detects or greater than 80% ND.
Diethyl Phthalate	33000	1	1	ND	Endpoint 3 – RPA is inconclusive. Less than 3 detects or greater than 80% ND.
Dimethyl Phthalate	820000	1	1	ND	Endpoint 3 – RPA is inconclusive. Less than 3 detects or greater than 80% ND.
Di-n-Butyl Phthalate	3500	1	1	ND	Endpoint 3 – RPA is inconclusive. Less than 3 detects or greater than 80% ND.
Ethylbenzene	4100	1	1	ND	Endpoint 3 – RPA is inconclusive. Less than 3 detects or greater than 80% ND.
Fluoranthene	15	1	1	ND	Endpoint 3 – RPA is inconclusive. Less than 3 detects or greater than 80% ND.
Hexachlorocyclo-pentadiene	58	1	1	ND	Endpoint 3 – RPA is inconclusive. Less than 3 detects or greater than 80% ND.
Nitrobenzene	4.9	1	1	ND	Endpoint 3 – RPA is inconclusive. Less than 3 detects or greater than 80% ND.
Thallium	2	4	4	ND	Endpoint 3 – RPA is inconclusive. Less than 3 detects or greater than 80% ND.
Toluene	85000	1	1	ND	Endpoint 3 – RPA is inconclusive. Less than 3 detects or greater than 80% ND.
Tributylin	0.0088	1	0	0.00564	Endpoint 3 – RPA is inconclusive. Less than 3 detects or greater than 80% ND.
Objectives for Protection of Human Health – Carcinogens					
1,1,2,2-Tetrachloroethane	2.3	1	1	ND	Endpoint 3 – RPA is inconclusive. Less than 3 detects or greater than 80% ND.
1,1,2-Trichloroethane	9.4	1	1	ND	Endpoint 3 – RPA is inconclusive. Less than 3 detects or greater than 80% ND.

DRAFT

Table B Pollutant	Most Stringent WQO (µg/L)	No. of Samples	No. of Non-Detects	Max Effluent Conc. (µg/L)	RPA Result, Comment
1,1-Dichloroethylene	0.9	1	1	ND	Endpoint 3 – RPA is inconclusive. Less than 3 detects or greater than 80% ND.
1,2-Dichloroethane	28	1	1	ND	Endpoint 3 – RPA is inconclusive. Less than 3 detects or greater than 80% ND.
1,2-Diphenylhydrazine	0.16	1	1	ND	Endpoint 3 – RPA is inconclusive. Less than 3 detects or greater than 80% ND.
1,3-Dichloropropylene	8.9	1	1	ND	Endpoint 3 – RPA is inconclusive. Less than 3 detects or greater than 80% ND.
1,4 Dichlorobenzene	18	1	1	ND	Endpoint 3 – RPA is inconclusive. Less than 3 detects or greater than 80% ND.
TCDD Equivalents	3.9E-9	1	0	8.6E-8	Endpoint 3 – RPA is inconclusive. Less than 3 detects or greater than 80% ND.
2,4,6-Trichlorophenol	0.29	1	1	ND	Endpoint 3 – RPA is inconclusive. Less than 3 detects or greater than 80% ND.
2,4-Dinitrotoluene	2.6	1	1	ND	Endpoint 3 – RPA is inconclusive. Less than 3 detects or greater than 80% ND.
3,3'-Dichlorobenzidine	0.0081	1	1	ND	Endpoint 3 – RPA is inconclusive. Less than 3 detects or greater than 80% ND.
Acrylonitrile	0.10	1	1	ND	Endpoint 3 – RPA is inconclusive. Less than 3 detects or greater than 80% ND.
Aldrin	2.2E-5	2	2	ND	Endpoint 3 – RPA is inconclusive. Less than 3 detects or greater than 80% ND.
Benzene	5.9	1	1	ND	Endpoint 3 – RPA is inconclusive. Less than 3 detects or greater than 80% ND.
Benzidine	6.9E-5	1	1	ND	Endpoint 3 – RPA is inconclusive. Less than 3 detects or greater than 80% ND.
Beryllium	0.033	5	5	ND	Endpoint 3 – RPA is inconclusive. Less than 3 detects or greater than 80% ND.

DRAFT

Table B Pollutant	Most Stringent WQO (µg/L)	No. of Samples	No. of Non-Detects	Max Effluent Conc. (µg/L)	RPA Result, Comment
Bis(2-Chloroethyl)Ether	0.045	1	1	ND	Endpoint 3 – RPA is inconclusive. Less than 3 detects or greater than 80% ND.
Bis(2-Ethylhexyl)Phthalate	3.5	1	0	6.3	Endpoint 3 – RPA is inconclusive. Less than 3 detects or greater than 80% ND.
Carbon Tetrachloride	0.90	1	1	ND	Endpoint 3 – RPA is inconclusive. Less than 3 detects or greater than 80% ND.
Chlordane	2.3E-5	2	2	ND	Endpoint 3 – RPA is inconclusive. Less than 3 detects or greater than 80% ND.
Chlorodibromomethane	8.6	---	---	---	No effluent data.
Chloroform	130	1	0	4.4	Endpoint 3 – RPA is inconclusive. Less than 3 detects or greater than 80% ND.
DDT (total)	0.00017	2	2	0.068	Endpoint 3 – RPA is inconclusive. Less than 3 detects or greater than 80% ND.
Dichlorobromomethane	6.2	1	1	ND	Endpoint 3 – RPA is inconclusive. Less than 3 detects or greater than 80% ND.
Dieldrin	0.00004	1	1	ND	Endpoint 3 – RPA is inconclusive. Less than 3 detects or greater than 80% ND.
Halomethanes	130	1	1	ND	Endpoint 3 – RPA is inconclusive. Less than 3 detects or greater than 80% ND.
Heptachlor	0.00005	2	2	ND	Endpoint 3 – RPA is inconclusive. Less than 3 detects or greater than 80% ND.
Heptachlor Epoxide	0.00002	2	2	ND	Endpoint 3 – RPA is inconclusive. Less than 3 detects or greater than 80% ND.
Hexachlorobenzene	0.00021	1	1	ND	Endpoint 3 – RPA is inconclusive. Less than 3 detects or greater than 80% ND.
Hexachlorobutadiene	14	1	1	ND	Endpoint 3 – RPA is inconclusive. Less than 3 detects or greater than 80% ND.

DRAFT

Table B Pollutant	Most Stringent WQO (µg/L)	No. of Samples	No. of Non-Detects	Max Effluent Conc. (µg/L)	RPA Result, Comment
Hexachloroethane	2.5	1	1	ND	Endpoint 3 – RPA is inconclusive. Less than 3 detects or greater than 80% ND.
Isophorone	730	1	1	ND	Endpoint 3 – RPA is inconclusive. Less than 3 detects or greater than 80% ND.
Methylene Chloride	450	1	1	ND	Endpoint 3 – RPA is inconclusive. Less than 3 detects or greater than 80% ND.
N-Nitrosodimethylamine	7.3	1	1	ND	Endpoint 3 – RPA is inconclusive. Less than 3 detects or greater than 80% ND.
N-Nitrosodi-n-Propylamine	0.38	1	1	ND	Endpoint 3 – RPA is inconclusive. Less than 3 detects or greater than 80% ND.
N-Nitrosodiphenylamine	2.5	1	1	ND	Endpoint 3 – RPA is inconclusive. Less than 3 detects or greater than 80% ND.
PAHs (total)	0.0088	1	1	ND	Endpoint 3 – RPA is inconclusive. Less than 3 detects or greater than 80% ND.
PCBs	1.9E-5	2	2	ND	Endpoint 3 – RPA is inconclusive. Less than 3 detects or greater than 80% ND.
Tetrachloroethylene	2.0	1	1	ND	Endpoint 3 – RPA is inconclusive. Less than 3 detects or greater than 80% ND.
Toxaphene	0.00021	2	2	ND	Endpoint 3 – RPA is inconclusive. Less than 3 detects or greater than 80% ND.
Trichloroethylene	27	1	1	ND	Endpoint 3 – RPA is inconclusive. Less than 3 detects or greater than 80% ND.
Vinyl Chloride	36	1	1	ND	Endpoint 3 – RPA is inconclusive. Less than 3 detects or greater than 80% ND.

Notes to Table 1:
ND indicates that the pollutant was not detected.
Minimum probable initial dilution for this Discharger is 50:1.
Effluent data used for this RPA are from November 2003 to August 2008.

DRAFT

4. WQBEL Calculations

Based on results of the RPA, performed in accordance with methods of the Ocean Plan for discharges to the Pacific Ocean and other available information pertaining to the discharge, the Regional Water Board is required to establish WQBELs for total residual chlorine, copper, zinc and total coliform bacteria.

As described by Section III. C of the Ocean Plan, effluent limits for Table B pollutants are calculated according to the following equation.

$$Ce = Co + Dm\ (Co - Cs)$$

Where …

Ce = the effluent limitation (µg/L)

Co = the concentration (the water quality objective) to be met at the completion of initial dilution (µg/L).

Cs = background seawater concentration (µg/L)

Dm = minimum probable initial dilution expressed as parts seawater per part wastewater (here, Dm = 50)

For the City of Fort Bragg WWTF, the Dm (50) is unchanged from the previous Order (No. R1-2005-0096). Initial dilution is the process that results in the rapid and irreversible turbulent mixing of wastewater with ocean water around the point of discharge. As site-specific, background water quality data are not available, in accordance with Table B implementing procedures, Cs equals zero for all pollutants, except the following.

Table F-8. Background Concentrations—Ocean Plan

Pollutant	Background Seawater Concentration
Arsenic	3 µg/L
Copper	2 µg/L
Mercury	0.0005 µg/L
Silver	0.16 µg/L
Zinc	8 µg/L

Applicable water quality objectives from Table B of the Ocean Plan are as follows.

DRAFT

Table F-9. Water Quality Objectives–Ocean Plan

Pollutant	Units	6-Month Median	Daily Maximum	Instantaneous Maximum	30 Day Avg
Total Residual Chlorine	µg/L	2	8	60	---
Copper	µg/L	3	12	30	---
Zinc	µg/L	20	80	200	---

Using the equation, Ce = Co + Dm (Co – Cs), effluent limitations are calculated as follows. Here, Dm is equal to 50 for each effluent limitation calculation.

Total Residual Chlorine

Ce = 2 + 50 (2 – 0) = 102 µg/L (6-Month Median)
Ce = 8 + 50 (8 – 0) = 408 µg/L (Daily Maximum)
Ce = 60 + 50 (60 – 0) = 3060 µg/L (Instantaneous Maximum)

Copper

Ce = 3 + 50 (3 – 2) = 53 µg/L (6-Month Median)
Ce = 12 + 50 (12 – 2) = 512 µg/L (Daily Maximum)
Ce = 30 + 50 (30 – 2) = 1430 µg/L (Instantaneous Maximum)

Zinc

Ce = 20 + 50 (20 – 8) = 620 µg/L (6-Month Median)
Ce = 80 + 50 (80 – 8) = 3680 µg/L (Daily Maximum)
Ce = 200 + 50 (200 – 8) = 9800 µg/L (Instantaneous Maximum)

Mass-based effluent limitations have also been established for total residual chlorine, copper and zinc pursuant to 40 CFR 122.45(f), which requires that pollutants limited in permits be expressed in terms of mass. Pollutants limited in terms of mass additionally may be limited in terms of other units of measurements. Like mass-based limitations for BOD_5 and TSS, mass-based limitations for WQBELs for Discharge Point 001 are based on the facility's peak dry weather design capacity for flows up to 1.0 mgd, or, alternatively during wet weather periods where flows exceed 1.0 mgd, are based on the facility's wet weather treatment capacity of 2.2 mgd. WQBELs established by the Order are summarized in the following table.

DRAFT

Table F-10. Summary of WQBELs for Ocean Plan Table B Pollutants

Pollutant	Units	6-Month Median	Daily Maximum	Instantaneous Maximum	30 Day Avg
Total Residual Chlorine	µg/L	104	408	3060	---
	lbs/day[7]	0.85	3.40	25.5	---
	lbs/day[8]	1.87	7.49	56.1	---
Copper	µg/L	53	512	1430	---
	lbs/day[7]	0.44	4.2	11.9	---
	lbs/day[8]	0.97	9.4	26.2	---
Zinc	µg/L	620	3680	9800	---
	lbs/day[7]	5.2	30.7	81.7	---
	lbs/day[8]	11.4	67.5	179.8	---

WQBELs for total coliform bacteria consist of the following:

The disinfected effluent discharged through Discharge Points 001 shall not contain concentrations of total coliform bacteria, as measured at Monitoring Location EFF-001, exceeding the following limitations:

(1) The median concentration shall not exceed a Most Probable Number (MPN) of 70 per 100 mL for a calendar month.

(2) Not more than 10 percent of samples shall exceed an MPN of 230 per 100 mL, using bacteriological results from ten consecutive samples.

5. Whole Effluent Toxicity (WET)

Effluent limits for whole effluent toxicity (WET), acute or chronic, protect the receiving water quality from the aggregate toxic effect of a mixture of pollutants in the effluent. There are two types of WET tests - acute and chronic. An acute toxicity test is conducted over a short time period and measures mortality. A chronic toxicity test is conducted over a longer period of time and may measure mortality, reproduction, and/or growth. The Ocean Plan contains numeric water quality objectives for acute and chronic toxicity established in Table B.

The Discharger performed semiannual (wet weather and dry weather) chronic toxicity static bioassays on red abalone (*Haliotis rufescens*), topsmelt (*Atherinops affinis*), giant kelp (*Macrocyctis pyrifera*), and the bay mussel (*Mytilus*

[7] Mass-based limitations are based on the average dry weather design flow of the WWTF of 1.0 mgd.
[8] These alternate mass-based limitations apply during periods of high infiltration/inflow when influent flow to the WWTF exceed 1.0 mgd for the limitation period (weekly, or monthly), and are based on the secondary wet weather treatment capacity of the WWTF (2.2 mgd).

galoprovincialis) using final effluent at dilutions of 12.5%, 10%, 5%, 2.5%, and 1.25% as percent effluent. Based on available toxicity results for the discharge, red abalone appeared to be the most sensitive species for the term of the previous permit and effluent toxicity does not appear to be subject to seasonal variability.

The Discharger's chronic toxicity testing results collected during the term of the previous permit are summarized in the table below.

Table F-11. Chronic Toxicity Testing Summary Results

Date	Chronic Toxicity Results – Growth and Development (TUc[9])				
	Atherinops affinis, topsmelt (survival and growth)	*Haliotis rufescens,* Red Abalone (larval development)	*Macrocystis pyrifera,* giant kelp (germination)	*Macrocystis pyrifera,* giant kelp (tube length)	*Mytilus galoprovincialis,* bay mussel (survival and shell development)
Oct. 2004	1	8	4	> 8	--
Mar. 2005	2	--	1	1	--
Apr. 2005	--	16	--	--	--
Mar. 2006	--	--	10	1	--
Oct. 2006	--	--	--	--	1
May 2007	--	--	--	--	1
Oct. 2007	--	10	--	--	--
Mar. 2008	--	20	--	--	--

This Order does not contain WET limitations, but, in accordance with the Ocean Plan, establishes chronic monitoring requirements for effluent at Discharge Point 001. If the result of any chronic toxicity test exceeds the water quality objective, the Discharger must initiate accelerated monitoring as described in section V of the MRP. After accelerated monitoring, if conditions of chronic toxicity are found to persist, the Discharger will be required to conduct a Toxicity Reduction Evaluation, as described by the MRP. These requirements are retained from the previous permit.

This Order also retains the requirement for the Discharger to conduct a screening test using at least one vertebrate, invertebrate, and plant species. After the screening test is completed, monitoring can be reduced to the most sensitive species.

[9] TUc = No Observed Effect Concentration (NOEC)/100

DRAFT

D. Final Effluent Limitations

1. Satisfaction of Anti-Backsliding Requirements

All effluent limitations in this Order are at least as stringent as the effluent limitations in the previous Order, with the following exceptions. Mass-based effluent limitations for BOD_5 and TSS applicable when wet weather flows exceed the average dry weather design capacity of 1.0 mgd are based on the average wet weather design flow of 2.2 mgd. In the previous Order, when wet weather flows were greater than 1.0 mgd but less than 2.2 mgd, mass-based effluent limitations for BOD_5 and TSS were based on the average flow measured over the monitoring period for which the limitation applied. The application of the mass-based limitation in this manner was ineffective in limiting the mass emission rate and was a misinterpretation of federal regulations at 122.45(d). Eliminating this calculated effluent limitation meets the exception established at CWA 402(o)(2)(B)(ii) to antibacksliding requirements. Effluent limitations for ammonia and cyanide are not retained by this Order at Discharge Point 001. The Ocean Plan includes a procedure for determining reasonable potential and establishing effluent limitations. Eliminating the effluent limitations from the previous permit that do not demonstrate reasonable potential meets the exception established at CWA 402(o)(2)(B)(i) to antibacksliding requirements. This exception states that a less stringent effluent limitation may be included in a reissued permit when information is available which was not available at the time of permit issuance.

2. Satisfaction of Antidegradation Policy

Provisions of the Order are consistent with applicable anti-degradation policy expressed by NPDES regulations at section 131.12 and by State Water Board Resolution No. 68-16. The Order does not authorize increases in discharge rates or pollutant loadings, and its limitations and conditions otherwise assure maintenance of the existing quality of receiving waters.

3. Stringency of Requirements for Individual Pollutants

This Order contains both technology-based and water quality-based effluent limitations for individual pollutants. The technology-based effluent limitations consist of restrictions on BOD_5, TSS, percent removal for BOD_5 and TSS, pH, settleable solids, oil and grease, and turbidity. Restrictions on these pollutants are discussed in section IV.B in this Fact Sheet. This Order's technology-based pollutant restrictions are not more stringent than the minimum, applicable federal technology-based requirements. The Order also contains effluent limitations in addition to the minimum, federal technology-based requirements, necessary to meet applicable water quality standards. These limitations are not more stringent than required by the CWA.

DRAFT

Water quality-based effluent limitations have been scientifically derived to implement water quality objectives that protect beneficial uses. Both the beneficial uses and the water quality objectives have been approved pursuant to federal law and are the applicable federal water quality standards. The scientific procedures for calculating the individual water quality-based effluent limitations are based on the Ocean Plan, which was approved by USEPA on February 14, 2006. All beneficial uses and water quality objectives contained in the Basin Plan were approved under state law and submitted to and approved by USEPA prior to May 30, 2000. Any water quality objectives and beneficial uses submitted to USEPA prior to May 30, 2000, but not approved by USEPA before that date, are nonetheless "applicable water quality standards for purposes of the CWA" pursuant to section 131.21(c)(1). Collectively, this Order's restrictions on individual pollutants are no more stringent than required to implement the requirements of the CWA.

In addition, the Regional Water Board has considered the factors in Water Code section 13263, including the provisions of Water Code section 13241, in establishing these requirements.

E. Interim Effluent Limitations

Not applicable.

F. Land Discharge Specifications

Not applicable.

G. Reclamation Specifications

Not applicable.

V. RATIONALE FOR RECEIVING WATER LIMITATIONS

A. Surface Water

Receiving water quality is a result of many factors, some unrelated to the discharge. This Order considers these factors and is designed to minimize the influence of the discharge on the receiving water. Receiving water limitations within the proposed Order generally include the receiving water limitations of the previous Order; however these limitations have been supplemented and modified to reflect all applicable, general water quality objectives of the Ocean Plan (2005).

B. Groundwater

Not applicable.

DRAFT

VI. RATIONALE FOR MONITORING AND REPORTING REQUIREMENTS

Section 122.48 requires that all NPDES permits specify requirements for recording and reporting monitoring results. Water Code sections 13267 and 13383 authorize the Regional Water Board to require technical and monitoring reports. The Monitoring and Reporting Program (MRP), Attachment E of this Order, establishes monitoring and reporting requirements to implement federal and state requirements. The following discussion provides the rationale for the monitoring and reporting requirements contained in the MRP for this facility.

A. Influent Monitoring

Influent monitoring requirements for BOD_5 and TSS are retained from the previous permit and are necessary to determine compliance with the Order's 85 percent removal (at Discharge Point 001) requirements for these parameters.

B. Effluent Monitoring

Effluent monitoring requirements for Discharge Point 001 from the previous permit are retained for flow, BOD_5, TSS, settleable solids, pH, total coliform bacteria, turbidity, and copper, and Ocean Plan Table B pollutants (except for chronic toxicity). Effluent monitoring for chronic toxicity has been reduced from a frequency of twice per year (dry weather and wet weather monitoring) to once per year because past monitoring results do no indicate seasonal variablity of effluent toxicity. In addition, monitoring requirements are newly established by the Monitoring and Reporting Program for zinc to determine compliance with newly established effluent limitations for zinc. Monitoring requirements for total residual chlorine have been revised from the previous permit to determine compliance with the newly established effluent limitations for total residual chlorine. These monitoring requirements are necessary to determine compliance with prohibitions and/or effluent limitations established by the Order. Further, routine monitoring for ammonia and cyanide is no longer required as these pollutants no longer demonstrate reasonable potential; however, monitoring for these pollutants is captured in the overall monitoring for Ocean Plan Table B pollutants.

Effluent monitoring requirements are contained in Attachment E, Section IV of the MRP.

C. Whole Effluent Toxicity Testing Requirements

Monitoring requirements for chronic toxicity are established for discharges to the Pacific Ocean (Monitoring Location EFF-001). The toxicity monitoring requirements are included in the Monitoring and Reporting Program pursuant to the Ocean Plan and are found in section V of the MRP.

DRAFT

D. Receiving Water Monitoring

1. Surface Water

Compliance with the receiving water limitation established in section V.A.4 of the Order will be determined based on a biological survey of the outfall location; the survey is required once every 5 years. In addition, the Discharger is required to inspect the outfall location to determine the structural integrity and operational status of the outfall structure at least once during the term of the permit.

2. Groundwater.

Not applicable.

E. Land Discharge Monitoring

Not applicable.

F. Other Monitoring Requirements

Not applicable.

VII. RATIONALE FOR PROVISIONS

A. Standard Provisions

Standard Provisions, which apply to all NPDES permits in accordance with section 122.41, and additional conditions applicable to specified categories of permits in accordance with section 122.42, are provided in Attachment D. The Discharger must comply with all standard provisions and with those additional conditions that are applicable under section 122.42.

Section 122.41(a) (1) and (b - n) establish conditions that apply to all State-issued NPDES permits. These conditions must be incorporated into the permits either expressly or by reference. If incorporated by reference, a specific citation to the regulations must be included in the Order. Section 123.25(a) (12) allows the State to omit or modify conditions to impose more stringent requirements. In accordance with section 123.25, this Order omits federal conditions that address enforcement authority specified in sections 122.41(j) (5) and (k) (2) because the enforcement authority under the Water Code is more stringent. In lieu of these conditions, this Order incorporates by reference Water Code section 13387(e).

B. Regional Water Board Standard Provisions

In addition to the Federal Standard Provisions (Attachment D), the Discharger shall comply with the Regional Water Board Standard Provisions provided in Standard Provisions VI.A.2.

DRAFT

1. Order Provision VI.A.2.a identifies the State's enforcement authority under the Water Code, which is more stringent than the enforcement authority specified in the federal regulations [e.g. 40 CFR sections 122.41(j)(5) and (k)(2)].

2. Order Provision VI.A.2.b requires the Discharger to notify Regional Water Board staff, orally and in writing, in the event that the Discharger does not comply or will be unable to comply with any Order requirement. This provision requires the Discharger to make direct contact with a Regional Water Board staff person.

C. Special Provisions

1. Reopener Provisions

a. Standard Revisions (Special Provisions VI.C.1.a). Conditions that necessitate a major modification of a permit are described in section 122.62, which include the following:

(1) When standards or regulations on which the permit was based have been changed by promulgation of amended standards or regulations or by judicial decision. If revisions of applicable water quality standards are therefore promulgated or approved pursuant to Section 303 of the CWA or amendments thereto, the Regional Water Board will revise and modify this Order in accordance with such revised standards.

(2) When new information that was not available at the time of permit issuance would have justified different permit conditions at the time of issuance.

b. Reasonable Potential (Special Provisions VI.C.1.b). This provision allows the Regional Water Board to modify, or revoke and reissue, this Order if present or future investigations demonstrate that the Discharger governed by this Permit is causing or contributing to excursions above any applicable priority pollutant criterion or objective, or adversely impacting water quality and/or the beneficial uses of receiving waters.

c. Whole Effluent Toxicity (Special Provisions VI.C.1.c). This Order requires the Discharger to investigate the causes of, and identify corrective actions to reduce or eliminate effluent toxicity through a TRE. This Order may be reopened to include a limitation for a specific toxicant identified in the TRE. Additionally, if a numeric chronic toxicity water quality objective is adopted by the State Water Board for inland surface waters, this Order may be reopened to include a numeric chronic toxicity limitation based on that objective.

DRAFT

2. Special Studies and Additional Monitoring Requirements

a. Toxicity Reduction Requirements (Special Provision VI.C.2.a)

In addition to routine toxicity monitoring, Special Provision VI.C.2.a requires the Discharger to submit to the Regional Water Board an Initial Investigative TRE Work Plan for approval by the Executive Officer, to ensure the Discharger has a plan to immediately move forward with the initial tiers of a TRE, in the event effluent toxicity is encountered. The TRE is initiated by evidence of a pattern of toxicity demonstrated through the additional effluent monitoring provided as a result of an accelerated monitoring program.

TRE Guidance. The Discharger is required to prepare a TRE Work Plan in accordance with appropriate USEPA guidance. Numerous guidance documents are available, as identified below.

1. Toxicity Reduction Evaluation Guidance for Municipal Wastewater Treatment Plants, (EPA/833B-99/002), August 1999.

2. Generalized Methodology for Conducting Industrial TREs, (EPA/600/2-88/070), April 1989.

3. Methods for Aquatic Toxicity Identification Evaluations: Phase I Toxicity Characterization Procedures, Second Edition, EPA 600/6-91/005F, February 1991.

4. Toxicity Identification Evaluation: Characterization of Chronically Toxic Effluents, Phase I, EPA 600/6-91/005F, May 1992.

5. Methods for Aquatic Toxicity Identification Evaluations: Phase II Toxicity Identification Procedures for Samples Exhibiting acute and Chronic Toxicity, Second Edition, EPA 600/R-92/080, September 1993.

6. Methods for Aquatic Toxicity Identification Evaluations: Phase III Toxicity Confirmation Procedures for Samples Exhibiting Acute and Chronic Toxicity, Second Edition, EPA 600/R-92/081, September 1993.

7. Methods for Measuring the Acute Toxicity of Effluents and Receiving Waters to Freshwater and Marine Organisms, Fifth Edition, EPA-821-R-02-012, October 2002.

8. Short-term Methods for Estimating the Chronic Toxicity of Effluents and Receiving Waters to Freshwater Organisms, Fourth Edition, EPA-821-R-02-013, October 2002.

9. Technical Support Document for Water Quality-based Toxics Control, EPA/505/2-90-001, March 1991

DRAFT

3. Best Management Practices and Pollution Prevention

a. Pollution Minimization Program

Provision VI.C.3.a is included in this Order pursuant to section III.C.9 of the Ocean Plan. A Pollutant Minimization Program is required when there is evidence that a toxic pollutant is present in effluent at a concentration greater than an applicable effluent limitation.

4. Construction, Operation, and Maintenance Specifications

Section 122.41 (e) requires proper operation and maintenance of permitted facilities to achieve compliance with permit conditions. An up-to-date operation and maintenance manual, as required by Section VI.C.4.a of the permit, is an integral part of a well-operated and maintained facility.

5. Special Provisions for Municipal Facilities (POTWs Only)

The Regional Water Board includes special provisions in all NPDES Orders for municipal wastewater treatment facilities regarding wastewater collection systems, sanitary sewer overflows, source control, sludge handling and disposal, operator certification, and adequate capacity. These provisions assure efficient and satisfactory operation of municipal wastewater collection and treatment systems.

a. Wastewater Collection Systems

1. **Statewide General WDRs for Sanitary Sewer Systems**. The State Water Board issued General Waste Discharge Requirements for Sanitary Sewer Systems, Water Quality Order No. 2006-0003-DWQ (General Order) on May 2, 2006. The General Order requires public agencies that own or operate sanitary sewer systems with greater than one mile of pipes or sewer lines to enroll for coverage under the General Order. The General Order requires agencies to develop sanitary sewer management plans (SSMPs) and report all sanitary sewer overflows (SSOs), among other requirements and prohibitions.

   Furthermore, the General Order contains requirements for operation and maintenance of collection systems and for reporting and mitigating sanitary sewer overflows. Inasmuch that the Discharger's collection system is part of the system that is subject to this Order, certain standard provisions are applicable as specified in Provisions, section VI.C.5. For instance, the 24-hour reporting requirements in this Order are not included in the General Order. The Discharger must comply with both the General Order and this Order. The Discharger and public agencies that are discharging wastewater into the facility were required to obtain enrollment for regulation under the General Order by December 1, 2006.

DRAFT

All NPDES permits for POTWs currently include federally required standard conditions to mitigate discharges [40 CFR 122.41(d)], to report non-compliance [40 CFR 122.41(1), (6), and (7)], and to properly operate and maintain facilities [40 CFR 122.41(e)]. This provision is consistent with these federal requirements.

2. **Sanitary Sewer Overflows**. Order No. 2006-0003-DWQ includes a Reporting Program that requires the Discharger, begun on May 2, 2007, to reports SSOs to an online SSO database administered through the California Integrated Water Quality System (CIWQS) and telefax reporting when the online SSO database is not available. The goal of these provisions is to ensure appropriate and timely response by the Discharger to sanitary sewer overflows to protect public health and water quality.

   The Order also includes provisions (Provision VI.C.5.(a)(ii), and Attachment D subsections I.C., I.D., V.E., and V.H.) to ensure adequate and timely notifications are made to the Regional Water Board and appropriate local, state, and federal authorities. The Order established oral reporting limits for SSOs. The Discharger is not required to orally report SSOs less than 100 gallons, while SSOs greater than or equal to 100 gallons must be reported orally to the Regional Water Board. The minimum volume threshold for oral reporting is based in that minor amounts of untreated or partially treated wastewater inevitably may escape during carefully executed routine operation and maintenance activities. Experience of Regional Water Board staff is that SSOs to land that are less than 100 gallons are not likely to have a material effect on the environment or public health. Larger volumes are indications of a lack of proper maintenance and due care, and pose more of a threat to the environment and public health. Regardless of the volume, all SSOs must be electronically reported pursuant to State Water Board Order No. 2006-0002-DWQ.

b. Source Control (Provisions VI.C.5.b). Because the average dry weather design flow of the Facility is less than 5.0 mgd, the Order does not require the Discharger to develop a pretreatment program that conforms to federal regulations. However, due to the identification of the reasonable potential for the priority pollutants, copper and zinc, in the discharge, the proposed Order includes requirements for the Discharger to implement a source identification and reduction program. The Discharger's source identification and reduction program will need to address only those pollutants that continue to be detected by levels that trigger reasonable potential.

In addition, the Regional Water Board recognizes that some form of source control is prudent to ensure the efficient operation of the WWTF, the safety of City staff, and to ensure that pollutants do not pass through the treatment facility to impair beneficial uses of the receiving water. The proposed Order includes

DRAFT

prohibitions for the discharge of pollutants that may interfere, pass through, or be incompatible with treatment operations, interfere with the use of disposal of sludge, or pose a health hazard to personnel.

c. **Sludge Disposal and Handling Requirements (Provisions VI.C.5.c).** The disposal or reuse of wastewater treatment screenings, sludges, or other solids removed from the liquid waste stream is regulated by Parts 257, 258, 501, and 503, and the State Water Board promulgated provisions of title 27, California Code of Regulations. Since 2005, the dried sludge is hauled off-site to the Redwood Landfill in Novato.

d. **Operator Certification (Provisions VI.C.5.d).** This provision requires the WWTF to be operated by supervisors and operators who are certified as required by title 23, California Code of Regulations, section 3680 and is retained from the previous permit.

e. **Adequate Capacity (Provisions VI.C.5.e).** The goal of this provision is to ensure appropriate and timely planning by the Discharger to ensure adequate capacity for the protection of public health and water quality. This provision is retained from the previous permit.

f. **Statewide General WDRs for Discharge of Biosolids to Land (Provisions VI.C.5.f).** This provision requires the Discharger to comply with the State's regulations relating to the discharge of biosolids to land. The discharge of biosolids through land application is not regulated under this Order. Instead, the Discharger is required to obtain coverage under the State Water Board Order No. 2004-0012-DWQ, General Waste Discharge Requirements for the Discharge of Biosolids to Land as a Soil Amendment in Agricultural, Silvicultural, Horticultural, and Land Reclamation Activities (General Order). Coverage under the General Order, as opposed to coverage under this NPDES permit or individual WDRs, implements a consistent statewide approach to regulating this waste discharge.

6. Other Special Provisions

a. Storm Water

For the control of storm water discharged from the site of the wastewater treatment plant, if applicable, the Discharger shall seek authorization to discharge under and meet the requirements of the State Water Board's Water Quality Order 97-03-DWQ, NPDES General Permit No. CAS000001, Waste Discharge Requirements for Discharges of Storm Water Associated with Industrial Activities Excluding Construction Activities (or subsequent renewed versions of the General Permit).

DRAFT

7. Compliance Schedules

Not applicable.

VIII. PUBLIC PARTICIPATION

The California Regional Water Quality Control Board, North Coast Region (Regional Water Board) is considering the issuance of waste discharge requirements (WDRs) that will serve as a National Pollutant Discharge Elimination System (NPDES) permit for the City of Fort Bragg Wastewater Treatment Facility. As a step in the WDR adoption process, the Regional Water Board staff has developed tentative WDRs. The Regional Water Board encourages public participation in the WDR adoption process.

A. Notification of Interested Parties

The Regional Water Board has notified the Discharger and interested agencies and persons of its intent to prescribe waste discharge requirements for the discharge and has provided them with an opportunity to submit their written comments and recommendations. Notification was provided through posting on the Regional Water Board's Internet site at: http://www.waterboards.ca.gov/northcoast/public_notices/public_hearings/npdes_permits_and_wdrs.shtml and through publication in the Press Democrat on March 17, 2009.

B. Written Comments

The staff determinations are tentative. Interested persons are invited to submit written comments concerning these tentative WDRs. Comments must be submitted either in person or by mail to the Executive Office at the Regional Water Board at the address above on the cover page of this Order.

To be fully responded to by staff and considered by the Regional Water Board, written comments should be received at the Regional Water Board offices by 5:00 p.m. on **April 17, 2009.**

C. Public Hearing

The Regional Water Board will hold a public hearing on the tentative WDRs during its regular Board meeting on the following date and time and at the following location:

Date:	June 4, 2009
Time:	8:30 AM, or as soon as possible thereafter as noticed in the final agenda
Location:	North Coast Regional Water Quality Control Board 5550 Skylane Boulevard, Suite A Santa Rosa, California 95403

Interested persons are invited to attend. At the public hearing, the Regional Water Board will hear testimony, if any, pertinent to the discharge, WDRs, and permit. Oral testimony

DRAFT

will be heard; however, for accuracy of the record, important testimony should be in writing.

Please be aware that dates and venues may change. Our Web address is http://www.waterboards.ca.gov/northcoast/contact.html where you can access the current agenda for changes in dates and locations.

D. Waste Discharge Requirements Petitions

Any aggrieved person may petition the State Water Resources Control Board to review the decision of the Regional Water Board regarding the final WDRs. The petition must be submitted within 30 days of the Regional Water Board's action to the following address:

State Water Resources Control Board
Office of Chief Counsel
P.O. Box 100, 1001 I Street
Sacramento, CA 95812-0100

E. Information and Copying

The Report of Waste Discharge (RWD), related documents, tentative effluent limitations and special provisions, comments received, and other information are on file and may be inspected at the address above at any time between 8:30 a.m. and 4:45 p.m., Monday through Friday. Copying of documents may be arranged through the Regional Water Board by calling (707) 576-2220.

F. Register of Interested Persons

Any person interested in being placed on the mailing list for information regarding the WDRs and NPDES permit should contact the Regional Water Board, reference this facility, and provide a name, address, and phone number.

G. Additional Information

Requests for additional information or questions regarding this order should be directed to Charles Reed at (707) 576-2752.

DRAFT