CALIFORNIA REGIONAL WATER QUALITY CONTROL BOARD
LOS ANGELES REGION

320 West 4th Street, Suite 200
(213) 576-6660 • Fax (213) 576-6640
http://www.waterboards.ca.gov

REVISED TENTATIVE

ORDER R4-2015-xxx
NPDES NO. CA0053911

WASTE DISCHARGE REQUIREMENTS FOR THE JOINT OUTFALL SYSTEM, SAN JOSE CREEK WATER RECLAMATION PLANT

The following Discharger is subject to waste discharge requirements (WDRs) set forth in this Order:

Table 1. Permittee Information

Discharger/Permittee	**Joint Outfall System**[1] (JOS, Permittee or Discharger)
Name of Facility	**San Jose Creek Water Reclamation Plant**
Facility Address	**1965 South Workman Mill Road**
	Whittier, CA 90601
	Los Angeles County

Table 2. Discharge Location

Discharge Point No.	Effluent Description	Discharge Point Latitude (North)	Discharge Point Longitude (West)	Receiving Water
001	Tertiary treated wastewater	33.930524	-118.107743	San Gabriel River
001A	Tertiary treated wastewater	33.994167	-118.073333	San Gabriel River
001B	Tertiary treated wastewater	33.969723	-118.088612	San Gabriel River
002	Tertiary treated wastewater	34.035458	-118.021054	San Jose Creek
003	Tertiary treated wastewater	34.036076	-118.030765	San Gabriel River
004	Tertiary treated wastewater	34.111125	-117.971036	San Gabriel River
005	Tertiary treated wastewater	34.131603	-117.950228	San Gabriel River

[1] Ownership and operation of the Joint Outfall System is proportionally shared among the signatory parties to the amended Joint Outfall Agreement effective July 1, 1995. These parties include County Sanitation Districts of Los Angeles Nos. 1, 2, 3, 5, 8, 15, 16, 17, 18, 19, 21, 22, 23, 28, 29, and 34, and South Bay Cities Sanitation District of Los Angeles County. The Joint Outfall System is an integrated network of facilities, which include La Canada, Los Coyotes, Long Beach, Pomona, Whittier Narrows, and San Jose Creek Water Reclamation Plants, and Joint Water Pollution Control Plant.

Table 3. Administrative Information

This Order was adopted on:	March 12, 2015
This Order shall become effective on:	April 1, 2015
This Order shall expire on:	March 31, 2020
The Permittee shall file a Report of Waste Discharge as an application for reissuance of WDRs in accordance with title 23, California Code of Regulations, and an application for reissuance of a National Pollutant Discharge Elimination System (NPDES) permit no later than:	180 days prior to the Order expiration date
The U.S. Environmental Protection Agency (U.S. EPA) and the California Regional Water Quality Control Board, Los Angeles Region have classified this discharge as follows:	Major

I, Samuel Unger, Executive Officer, do hereby certify that this Order with all attachments is a full, true, and correct copy of the Order adopted by the California Regional Water Quality Control Board, Los Angeles Region, on the date indicated above.

_____

Samuel Unger, Executive Officer

REVISED TENTATIVE

CONTENTS

I. Facility Information 4
II. Findings 4
III. Discharge Prohibitions 4
IV. Effluent Limitations and Discharge Specifications 5
A. Effluent Limitations – Discharge Point Nos. 001, 001A and 001B (Effluent from East and West Facilities to San Gabriel River) 5
B. Effluent Limitations – Discharge Point No. 002 (Effluent from East Facility to San Jose Creek) 7
C. Effluent Limitations – Discharge Point No. 003, 004 and 005 (Effluent from West Facility to San Gabriel River) 9
D. Interim Effluent Limitations – Not Applicable 12
E. Other Effluent Limitations 12
F. Land Discharge Specifications – Not Applicable 13
G. Recycling Specifications -- Not Applicable 13
V. Receiving Water Limitations 13
VI. Provisions 15
VII. Compliance Determination 28

TABLES

Table 1. Permittee Information 1
Table 2. Discharge Location 1
Table 3. Administrative Information 2
Table 4. Effluent Limitations at EFF-001, EFF-001A, and EFF-001B 5
Table 5. Effluent Limitations at EFF-002 7
Table 6. Effluent Limitations at EFF-003, 004 and 005 10

ATTACHMENTS

Attachment A – Definitions A-1
Attachment B-1 – Map of San Jose Creek WRP including Efluent Discharge and Receiving Water Monitoring Locations B-1
Attachment B-2 – Map of San Jose Creek WRP and surrounding area B-2
Attachment B-3 – Map of San Jose Creek WRP Outfall Locations B-3
Attachment B-4 – Map of San Jose Creek WRP showing depth to groundwater near San Jose Creek B-4
Attachment B-5 – Map of Indirect Reuse and Replenishment Project (IRRP) B-5
Attachment B-6 – Detail Map of Indirect Reuse and Replenishment Project (IRRP) B-6
Attachment C-1 – San Jose Creek West Process Schematic C-1
Attachment C-2 – San Jose Creek East Process Schematic C-2
Attachment D – Standard Provisions D-1
Attachment E – Monitoring and Reporting Program E-1
Attachment F – Fact Sheet F-1
Attachment G – Toxicity Reduction Evaluation (TRE) Work Plan G-1
Attachment H – Pretreatment Reporting Requirements H-1

REVISED TENTATIVE

I. FACILITY INFORMATION

Information describing the San Jose Creek Water Reclamation Plant (San Jose Creek WRP or Facility or Plant) is summarized in Table 1 and in sections I and II of the Fact Sheet (Attachment F). Section I of the Fact Sheet also includes information regarding the Facility's permit application.

II. FINDINGS

The California Regional Water Quality Control Board, Los Angeles Region (Regional Water Board), finds:

A. Legal Authorities This Order serves as WDRs pursuant to article 4, chapter 4, division 7 of the California Water Code (commencing with section 13260). This Order is also issued pursuant to section 402 of the federal Clean Water Act (CWA) and implementing regulations adopted by the U.S. EPA and chapter 5.5, division 7 of the Water Code (commencing with section 13370). It shall serve as an NPDES permit for point source discharges from this facility to surface waters.

B. Background and Rationale for Requirements. The Regional Water Board developed the requirements in this Order based on information submitted as part of the application, through monitoring and reporting programs, and other available information. The Fact Sheet (Attachment F), which contains background information and rationale for the requirements in this Order, is hereby incorporated into and constitutes Findings for this Order. Attachments A through E and G and H are also incorporated into this Order.

C. Notification of Interested Parties. The Regional Water Board has notified the Permittee and interested agencies and persons of its intent to prescribe WDRs for the discharge and has provided them with an opportunity to submit their written comments and recommendations. Details of the notification are provided in the Fact Sheet.

D. Provisions and Requirements Implementing State Law. Some of the provisions/requirements in this Order and the MRP are included to implement state law only. These provisions/requirements are not mandated or authorized under the federal CWA; consequently, violations of these provisions/requirements are not subject to the enforcement remedies available for NPDES violations.

E. Consideration of Public Comment. The Regional Water Board, in a public meeting, heard and considered all comments pertaining to the discharge. Details of the Public Hearing are provided in the Fact Sheet.

THEREFORE, IT IS HEREBY ORDERED that this Order supersedes Order R4-2009-0078 except for enforcement purposes, and, in order to meet the provisions contained in division 7 of the Water Code (commencing with section 13000) and regulations adopted thereunder, and the provisions of the CWA and regulations and guidelines adopted thereunder, the Permittee shall comply with the requirements in this Order. This action in no way prevents the Regional Water Board from taking enforcement action for past violations of the previous Order.

III. DISCHARGE PROHIBITIONS

A. Discharge of treated wastewater at a location different from that described in this Order is prohibited.

REVISED TENTATIVE

B. The bypass or overflow of untreated wastewater or wastes to surface waters or surface water drainage courses is prohibited, except as allowed in Standard Provision I.G. of Attachment D, Standard Provisions.

C. The monthly average effluent dry weather discharge flow rate from the East and West Facilities shall not exceed the design capacity of 62.5 and 37.5 MGD, respectively.

D. The Permittee shall not cause degradation of any water supply, except as consistent with State Water Board Resolution No. 68-16.

E. The treatment or disposal of wastes from the Facility shall not cause pollution or nuisance as defined in section 13050, subdivisions (l) and (m) of the CWC.

F. The discharge of any substances in concentrations toxic to animal or plant is prohibited.

G. The discharge of any radiological, chemical, or biological warfare agent or high level radiological waste is prohibited.

REVISED TENTATIVE

IV. EFFLUENT LIMITATIONS AND DISCHARGE SPECIFICATIONS

A. Effluent Limitations – Discharge Point Nos. 001, 001A and 001B (Effluent from East and West Facilities to San Gabriel River)

The Permittee shall maintain compliance with the following effluent limitations at Discharge Point Nos. 001,001A and 001B with compliance measured at Monitoring Locations EFF-001, 001A or 001B as described in the Monitoring and Reporting Program (MRP), Attachment E:

Table 4. Effluent Limitations at EFF-001, EFF-001A, and EFF-001B

Parameter	Units	Effluent Limitations				
		Average Monthly	Average Weekly	Maximum Daily	Instantaneous Minimum	Instantaneous Maximum
Effluent Limits at EFF-001, EFF-001A and EFF-001B						
Biochemical Oxygen Demand 5-day @ 20°C	mg/L	20	30	45	--	--
	lbs/day[1]	16,700	25,000	37,500	--	--
Total Suspended Solids	mg/L	15	40	45	--	--
	lbs/day[1]	12,500	33,400	37,500	--	--
pH	standard units	--	--	--	6.5	8.5
Oil and Grease	mg/L	10	--	15	--	--
	lbs/day[1]	8,340	--	12,510	--	--
Removal Efficiency for BOD and TSS	%	85	--	--	--	--
Settleable Solids	ml/L	0.1	--	0.3	--	--
Total Residual Chlorine	mg/L	--	--	0.1	--	--
	lbs/day[1]	--	--	83		
Benzo(k)fluoranthene	µg/L	0.049	--	0.98	--	--
	lbs/day[1]	0.04	--	0.08	--	--

[1] The mass emission rates are based on the combined plant design flow rate of 100 mgd, and are calculated as follows: Flow (MGD) x Concentration (mg/L) x 8.34 (conversion factor) = lbs/day. During wet-weather storm events in which the flow exceeds the design capacity, the mass discharge rate limitations shall not apply, and concentration limitations will provide the only applicable effluent limitations.

Parameter	Units	Effluent Limitations				
		Average Monthly	Average Weekly	Maximum Daily	Instantaneous Mini Mum	Instantaneous Maximum
Dibenzo(a,h) Anthracene	µg/L	0.049	--	0.98	--	--
	lbs/day[1]	0.04	--	0.08	--	--
Indeno(1,2,3-cd)pyrene	µg/L	0.049	--	0.98	--	--
	lbs/day[1]	0.04	--	0.08	--	--
Chronic Toxicity[2], [3]	Pass or Fail, % Effect (Test of Significant Toxicity, (TST))	Pass[4]	--	Pass or % Effect <50	--	--
Effluent Limits at EFF-001 ONLY						
Ammonia Nitrogen (ELS absent)	mg/L	5.5	--	8	--	--
	lbs/day[1]	4,587	--	6,670	--	--
Copper (dry weather)[5]	µg/L	17	--	22	--	--
Effluent Limits at EFF-001A and 001B ONLY						
Total Dissolved Solids	mg/L	750	--	--	--	--
	lbs/day[1]	625,500	--	--	--	--
Sulfate	mg/L	300	--	--	--	--
	lbs/day[1]	250,200	--	--	--	--
Chloride	mg/L	180	--	--	--	--
	lbs/day[1]	150,100	--	--	--	--
Boron	mg/L	1.0	--	--	--	--
	lbs/day[1]	830	--	--	--	--
Nitrite as Nitrogen	mg/L	1.0	--	--	--	--
	lbs/day[1]	830	--	--	--	--
MBAS	mg/L	0.5	--	--	--	--
	lbs/day[1]	417	--	--	--	--

REVISED TENTATIVE

[2] A numeric WQBEL is established because effluent data showed that there was reasonable potential for the effluent to cause or contribute to an exceedance of the chronic toxicity water quality objective. The Chronic Toxicity final effluent limitation is protective of both the numeric acute toxicity and the narrative toxicity Basin Plan water quality objectives. These final effluent limitations will be implemented using the *Short Term Methods for Estimating the Chronic Toxicity of Effluents and Receiving Waters to Freshwater Organisms* (U.S. EPA 2002, EPA-821-R-02-013), current USEPA guidance in *National Pollutant Discharge Elimination System Test of Significant Toxicity Implementation Document (EPA 833-R-10-003, June /2010)* and *EPA Regions 8, 9 and 10 Toxicity Training Tool (January 2010), http://www2.epa.gov/region8/epa-regions-8-9-and-10-toxicity-training-tool-january-2010*.

[3] The median monthly effluent limitation (MMEL) shall be reported as "Pass" or "Fail." The maximum daily effluent limitation (MDEL) shall be reported as "Pass" or "Fail" and "% Effect." The MMEL for chronic toxicity shall only apply when there is a discharge of more than one day in a calendar month period. During such calendar months, up to three independent toxicity tests may be conducted when one toxicity test results in "Fail."

[4] This is a Median Monthly Effluent Limitation.

[5] This effluent limitation applies only during dry-weather when the maximum daily flow measured at SGS Station 11087020 is less than 260 cubic feet per second.

Parameter	Units	Effluent Limitations				
		Average Monthly	Average Weekly	Maximum Daily	Instantaneous Mini Mum	Instantaneous Maximum
Ammonia Nitrogen (ELS present)	mg/L	4.0	--	6.0	--	--
	lbs/day[1]	3,336	--	5,004	--	--
Ammonia Nitrogen (ELS absent)	mg/L	4.9	--	6.8	--	--
	lbs/day[1]	4,087	--	5,671	--	--
Nitrate + Nitrite as Nitrogen	mg/L	8	--	--	--	--
	lbs/day[1]	6,670	--	--	--	--
Lead (wet-weather)[6]	µg/L	--	--	166	--	--
Copper	µg/L	18-	--	24	--	--
	lbs/day[1]	15	--	20	--	--
Total Trihalomethanes[7]	µg/L	80	--	--	--	--
	lbs/day[1]	66.7	--	--	--	--

REVISED TENTATIVE

B. Effluent Limitations – Discharge Point No. 002 (Effluent from East Facility to San Jose Creek)

The Permittee shall maintain compliance with the following effluent limitations at Discharge Point No.002 with compliance measured at Monitoring Location EFF-002 as described in the MRP, Attachment E:

Table 5. Effluent Limitations at EFF-002

Parameter	Units	Effluent Limitations				
		Average Monthly	Average Weekly	Maximum Daily	Instantaneous Mini Mum	Instantaneous Maximum
Biochemical Oxygen Demand 5-day @ 20°C	mg/L	20	30	45	--	--
	lbs/day[8]	10,400	15,600	23,500	--	--
Total Suspended Solids	mg/L	15	40	45	--	--
	lbs/day[8]	7,820	20,900	23,500	--	--
pH	standard units	--	--	--	6.5	8.5

[6] This final effluent limitation for lead is derived from the wet weather final waste load allocation, as set forth in the *Total Maximum Daily Loads for Metals and Selenium for the San Gabriel River and Impaired Tributaries (SGR Metals TMDL)*, promulgated by USEPA Region IX, on March 26, 2007. Consistent with the Implementation Recommendations of the *SGR Metals TMDL*, the wet weather waste load allocation was translated into effluent limitations by applying the SIP procedures. This effluent limitation applies only during wet weather, when the flow in the San Gabriel River is greater than or equal to 260 cubic feet per second (cfs), measured at USGS flow gauging station 11087020, located above the Whittier Narrows dam.

[7] Total Trihalomethanes is the sum of concentrations of the trihalomethane compounds: bromodichloromethane, bromoform, chloroform, and dibromochloromethane.

[8] The mass emission rates are based on the east plant design flow rate of 62.5 mgd, and are calculated as follows: Flow (MGD) x Concentration (mg/L) x 8.34 (conversion factor) = lbs/day. During wet-weather storm events in which the flow exceeds the design capacity, the mass discharge rate limitations shall not apply, and concentration limitations will provide the only applicable effluent limitations.

Parameter	Units	Effluent Limitations				
		Average Monthly	Average Weekly	Maximum Daily	Instantaneous Mini Mum	Instantaneous Maximum
Oil and Grease	mg/L	10	--	15	--	--
	lbs/day[8]	5,210	--	7,820	--	--
Removal Efficiency for BOD and TSS	%	85	--	--	--	--
Settleable Solids	ml/L	0.1	--	0.3	--	--
Methylene Blue Active Substances (MBAS)	mg/L	0.5	--	--	--	--
	lbs/day[8]	261	--	--	--	--
Total Residual Chloride	mg/L	--	--	0.1	--	--
	lbs/day[8]	--	--	52	--	--
Total Dissolved Solids	mg/L	750	--	--	--	--
	lbs/day[8]	391,000	--	--	--	--
Boron	mg/L	1	--	--	--	--
	lbs/day[8]	521	--	--	--	--
Sulfate	mg/L	300	--	--	--	--
	lbs/day[8]	156,000	--	--	--	--
Chloride	mg/L	180	--	--	--	--
	lbs/day[8]	93,800	--	--	--	--
Ammonia Nitrogen (ELS present)	mg/L	4.2	--	6.1	--	--
	lbs/day[8]	2,190	--	3,180	--	--
Ammonia Nitrogen (ELS absent)	mg/L	5.4	--	7.8	--	--
	lbs/day[8]	2,810	--	4,070	--	--
Nitrate plus Nitrite as Nitrogen	mg/L	8	--	--	--	--
	lbs/day[8]	4,170	--	--	--	--
Nitrite as Nitrogen	mg/L	1	--	--	--	--
	lbs/day[8]	521	--	--	--	--
Lead (wet-weather)[9]	µg/L	-	--	166	--	--
Selenium [Dry weather][10]	µg/L	4.6	--	6.5	--	--
	lbs/day[8]	2.4	--	3.4	--	--

REVISED TENTATIVE

[9] This final effluent limitation for lead is derived from the wet weather final waste load allocation, as set forth in the *Total Maximum Daily Loads for Metals and Selenium for the San Gabriel River and Impaired Tributaries (SGR Metals TMDL)*, promulgated by USEPA Region IX, on March 26, 2007. Consistent with the Implementation Recommendations of the *SGR Metals TMDL*, the wet weather waste load allocation was translated into effluent limitations by applying the SIP procedures. This effluent limitation applies only during wet weather, when the flow in the San Gabriel River is greater than or equal to 260 cubic feet per second (cfs), measured at USGS flow gauging station 11087020, located above the Whittier Narrows dam.

[10] This effluent limitation applies only during dry weather, when the flow in the San Gabriel River is less than 260 cubic feet per second (cfs), measured at United States Geological Survey (USGS) flow gauging station 11087020, located above the Whittier Narrows dam.

Parameter	Units	Effluent Limitations				
		Average Monthly	Average Weekly	Maximum Daily	Instantaneous Mini Mum	Instantaneous Maximum
Chrysene[11]	µg/L	0.049	--	0.098	--	--
	lbs/day[8]	0.03	--	0.05	--	--
Dibenzo(a,h)anthracene[11]	µg/L	0.049	--	0.098	--	--
	lbs/day[8]	0.03	--	0.05	--	--
Indeno(1,2,3-cd)pyrene[11]	µg/L	0.049	--	0.098	--	--
	lbs/day[8]	0.03	--	0.05	--	--
Benzo(k)fluoranthene[11]	µg/L	0.049	--	0.098	--	--
	lbs/day[8]	0.03	--	0.05	--	--
Total Trihalomethanes	µg/L	80	--	--	--	--
	lbs/day[8]	41.7	--	--	--	--
Chronic Toxicity[12], [13]	Pass or Fail, % Effect (TST)	Pass[14]	--	Pass or % Effect <50	--	--

REVISED TENTATIVE

C. Effluent Limitations – Discharge Point No. 003, 004 and 005 (Effluent from West Facility to San Gabriel River)

The Permittee shall maintain compliance with the following effluent limitations at Discharge Point No. 003, 004 and 005 with compliance measured at Monitoring Location EFF-003 as described in the MRP, Attachment E. Discharge Point Nos.EFF-004 and EFF-005 have been added to this Order but are not approved for discharge until after the approval of a Title 22 Engineering Report by the Division of Drinking Water (DDW) and the WRR for the facility has been adopted.

[11] Chrysene, Dibenzo(a,h)anthracene, Benzo(k) fluoranthene, and Indeno(1,2,3)pyrene did not have limits in the previous Order, but receive limits in this Order because the background concentrations of the receiving water station RSW-001 were higher than the criteria and the constituent was present in the effluent,

[12] A numeric WQBEL is established because effluent data showed that there was reasonable potential for the effluent to cause or contribute to an exceedance of the chronic toxicity water quality objective. The Chronic Toxicity final effluent limitation is protective of both the numeric acute toxicity and the narrative toxicity Basin Plan water quality objectives. These final effluent limitations will be implemented using the *Short Term Methods for Estimating the Chronic Toxicity of Effluents and Receiving Waters to Freshwater Organisms* (U.S. EPA 2002, EPA-821-R-02-013), current USEPA guidance in *National Pollutant Discharge Elimination System Test of Significant Toxicity Implementation Document (EPA 833-R-10-003, June /2010)* and *EPA Regions 8, 9 and 10 Toxicity Training Tool (January 2010), http://www2.epa.gov/region8/epa-regions-8-9-and-10-toxicity-training-tool-january-2010*.

[13] The median monthly effluent limitation (MMEL) shall be reported as “Pass” or “Fail.” The maximum daily effluent limitation (MDEL) shall be reported as “Pass” or “Fail” and “% Effect.” The MMEL for chronic toxicity shall only apply when there is a discharge on more than one day in a calendar month period. During such calendar months, up to three independent toxicity tests may be conducted when one toxicity test results in “Fail.”

[14] This is a Median Monthly Effluent Limitation.

Table 6. Effluent Limitations at EFF-003, 004 and 005

Parameter	Units	Effluent Limitations				
		Average Monthly	Average Weekly	Maximum Daily	Instantaneous Minimum	Instantaneous Maximum
Effluent Limits at EFF-003, EFF-004 and EFF-005						
Biochemical Oxygen Demand 5-day @ 20°C	mg/L	20	30	45	--	--
	lbs/day[15]	6,250	9,380	14,070	--	--
Total Suspended Solids	mg/L	15	40	45	--	--
	lbs/day[15]	4,690	12,500	14,070	--	--
pH	standard units	--	--	--	6.5	8.5
Oil and Grease	mg/L	10	--	15	--	--
	lbs/day[15]	3,130	--	4,690	--	--
Removal Efficiency for BOD and TSS	%	85	--	--	--	--
Settleable Solids	ml/L	0.1	--	0.3	--	--
Total Residual Chlorine	mg/L	--	--	0.1	--	--
	lbs/day[15]	--	--	31	--	--
Methylene Blue Active Substances (MBAS)	mg/L	0.5	--	--	--	--
	lbs/day[15]	156	--	--	--	--
Nitrate Plus Nitrite as Nitrogen	mg/L	8	--	--	--	--
	lbs/day[15]	2500	--	--	--	--
Nitrite as Nitrogen	mg/L	1	--	--	--	--
	lbs/day[15]	312	--	--	--	--
Lead (wet-weather)	µg/L	--	--	166[16]	--	--
Dibenzo(a,h)anthracene	µg/L	0.049	--	0.098	--	--
	lbs/day[15]	0.015	--	0.031	--	--
Total Trihalomethanes	µg/L	80	--	--	--	--
	lbs/day[15]	25.0	--	--	--	--

REVISED TENTATIVE

[15] The mass emission rates are based on the east plant design flow rate of 37.5 mgd, and are calculated as follows: Flow (MGD) x Concentration (mg/L) x 8.34 (conversion factor) = lbs/day. During wet-weather storm events in which the flow exceeds the design capacity, the mass discharge rate limitations shall not apply, and concentration limitations will provide the only applicable effluent limitations.

[16] This final effluent limitation for lead is derived from the wet weather final waste load allocation, as set forth in the *Total Maximum Daily Loads for Metals and Selenium for the San Gabriel River and Impaired Tributaries (SGR Metals TMDL)*, promulgated by USEPA Region IX, on March 26, 2007. Consistent with the Implementation Recommendations of the *SGR Metals TMDL*, the wet weather waste load allocation was translated into effluent limitations by applying the SIP procedures. This effluent limitation applies only during wet weather, when the flow in the San Gabriel River is greater than or equal to 260 cubic feet per second (cfs), measured at USGS flow gauging station 11087020, located above the Whittier Narrows dam.

Parameter	Units	Effluent Limitations				
		Average Monthly	Average Weekly	Maximum Daily	Instantaneous Minimum	Instantaneous Maximum
Chronic Toxicity[17], [18]	Pass or Fail, % Effect (TST)	Pass[19]	--	Pass or % Effect <50	--	--
Effluent Limits at EFF-003 ONLY						
Total Dissolved Solids	mg/L	750	--	--	--	--
	lbs/day[15]	235,000	--	--	--	--
Sulfate	mg/L	300	--	--	--	--
	lbs/day[15]	93,830	--	--	--	--
Chloride	mg/L	180	--	--	--	--
	lbs/day[15]	56,300	--	--	--	--
Boron	mg/L	1.0	--	--	--	--
	lbs/day[15]	313	--	--	--	--
Ammonia Nitrogen (ELS present)	mg/L	4.0	--	6.3	--	--
	lbs/day[15]	1,250	--	1,970	--	--
Ammonia Nitrogen (ELS absent)	mg/L	5.0	--	7.8	--	--
	lbs/day[15]	1,564	--	2,439	--	--
Effluent Limits at EFF-004 and EFF-005 ONLY						
Total Dissolved Solids	mg/L	450	--	--	--	--
	lbs/day[15]	140,700	--	--	--	--
Sulfate	mg/L	100	--	--	--	--
	lbs/day[15]	31,130	--	--	--	--
Chloride	mg/L	100	--	--	--	--
	lbs/day[15]	31,130	--	--	--	--
Boron	mg/L	0.5	--	--	--	--
	lbs/day[15]	156	--	--	--	--
Ammonia Nitrogen (ELS	mg/L	2.8	--	4.4	--	--

REVISED TENTATIVE

[17] A numeric WQBEL is established because effluent data showed that there was reasonable potential for the effluent to cause or contribute to an exceedance of the chronic toxicity water quality objective. The Chronic Toxicity final effluent limitation is protective of both the numeric acute toxicity and the narrative toxicity Basin Plan water quality objectives. These final effluent limitations will be implemented using the *Short Term Methods for Estimating the Chronic Toxicity of Effluents and Receiving Waters to Freshwater Organisms* (U.S. EPA 2002, EPA-821-R-02-013), current USEPA guidance in *National Pollutant Discharge Elimination System Test of Significant Toxicity Implementation Document (EPA 833-R-10-003, June /2010)* and *EPA Regions 8, 9 and 10 Toxicity Training Tool (January 2010), http://www2.epa.gov/region8/epa-regions-8-9-and-10-toxicity-training-tool-january-2010*.

[18] The median monthly effluent limitation (MMEL) shall be reported as “Pass” or “Fail.” The maximum daily effluent limitation (MDEL) shall be reported as “Pass” or “Fail” and “% Effect.” The MMEL for chronic toxicity shall only apply when there is a discharge of more than one day in a calendar month period. During such calendar months, up to three independent toxicity tests may be conducted when one toxicity test results in “Fail.”

[19] This is a Median Monthly Effluent Limitation.

Parameter	Units	Effluent Limitations				
		Average Monthly	Average Weekly	Maximum Daily	Instantaneous Minimum	Instantaneous Maximum
absent)	lbs/day[15]	880	--	1380	--	--
Arsenic	µg/L	10	--	--	--	--
	lbs/day[15]	3.13	--	--	--	--
Copper	µg/L	20	--	26	--	--
	lbs/day[15]	6.34	--	8.13	--	--
Selenium	µg/L	4.5	--	6.86	--	--
	lbs/day[15]	1.40	--	2.15	--	--

REVISED TENTATIVE

D. Interim Effluent Limitations – Not Applicable

E. Other Effluent Limitations

1. **Percent Removal**: The average monthly percent removal of BOD 5-day 20°C and TSS shall not be less than 85 percent.
2. **Temperature:** The temperature of the wastes discharged shall not exceed 86°F except as a result of external ambient temperature.
3. **Radioactivity:** The radioactivity of the discharge shall not exceed the limits specified in Title 22, chapter 15, article 5, sections 64442 and 64443, of the California Code of Regulations (CCR), or subsequent revisions.
4. **Disinfection:** The discharge to water courses shall at all times be adequately disinfected. For the purpose of this requirement, the discharge shall be considered adequately disinfected if: 1) the median number of coliform organisms at some point in the treatment process does not exceed a most probable number (MPN) or colony forming units (CFU) of 2.2 per 100 milliliters utilizing the bacteriological results of the last seven days for which analyses have been completed; 2) the number of coliform organisms does not exceed an MPN or CFU of 23 per 100 milliliters in more than one sample within any 30-day period; and, 3) no sample exceeds 240 MPN or CFU of total coliform bacteria per 100 milliliters. Samples shall be collected at a time when wastewater flow and characteristics are most demanding on treatment facilities and disinfection processes.
5. **Turbidity:** For the protection of the water contact recreation beneficial use, the discharge to water courses shall have received adequate treatment, so that the turbidity of the treated wastewater does not exceed any of the following: (a) an average of 2 Nephelometric Turbidity Units (NTUs) within a 24-hour period; (b) 5 NTUs more than 5 percent of the time (72 minutes) within a 24-hour period; and (c) 10 NTU at any time.
6. **Groundwater Protection**: To protect the underlying ground water basins, pollutants shall not be present in the discharge at concentrations that pose a threat to groundwater quality
7. **Recycled Water Discharge:** Two additional outfalls are scheduled for construction to deliver tertiary treated recycled water to the Upper San Gabriel Indirect Reuse Replenishment Project (IRRP). Discharge Point Nos. 004 and 005 receive NPDES limits in this Order for the surface water discharge. The objective of the IRRP is

groundwater replenishment and the local hydrological conditions are expected to provide immediate percolation in the vicinity of the discharge. As a result, the outfalls EFF-004 and EFF-005 cannot be used until the Division of Drinking Water has approved the Title 22 Engineering Report for the specific discharge and a WRR has been adopted by the Regional Water Board for the area of discharge. Additional potential impacts to groundwater quality will be assessed during the issuance of the WRRs.

F. Land Discharge Specifications – Not Applicable

G. Recycling Specifications – Not Applicable

V. RECEIVING WATER LIMITATIONS

A. Surface Water Limitations

Receiving water limitations are based on water quality objectives (WQOs) contained in the Basin Plan and are a required part of this Order. The discharge shall not cause the exceedance of the following limitations in San Jose Creek or the San Gabriel River:

1. For waters designated with a warm freshwater habitat (WARM) beneficial use, the temperature of the receiving water at any time or place and within any given 24-hour period shall not be altered by more than 5°F above the natural temperature due to the discharge of effluent at the receiving water station located downstream of the discharge. Natural conditions shall be determined on a case-by-case basis.

   If the receiving water temperature, downstream of the discharge, exceeds 86°F as a result of the following:

   a. High temperature in the ambient air; or,

   b. High temperature in the receiving water upstream of the discharge,

   then the exceedance shall not be considered a violation.

2. The pH of inland surface waters shall not be depressed below 6.5 or raised above 8.5 as a result of the discharge. Ambient pH levels shall not be changed more than 0.5 units from natural conditions as a result of the discharge. Natural conditions shall be determined on a case-by-case basis.

3. The dissolved oxygen in the receiving water shall not be depressed below 5 mg/L as a result of the discharge.

4. The total residual chlorine shall not exceed 0.1 mg/L in the receiving waters and shall not persist in the receiving water at any concentration that causes impairment of beneficial uses as a result of the discharge.

5. The Escherichia coli (*E. coli*) concentration in the receiving water shall not exceed the following, as a result of the discharge:

   a. Geometric Mean Limits

   E. coli density shall not exceed 126/100 mL.

   b. Single Sample Limits

   E. coli density shall not exceed 235/100 mL.

REVISED TENTATIVE

6. Waters shall be free of changes in turbidity that cause nuisance or adversely affect beneficial uses. Increases in natural turbidity attributable to controllable water quality factors shall not exceed the following limits, as a result of the discharge:
   a. Where natural turbidity is between 0 and 50 NTU, increases shall not exceed 20%, and
   b. Where natural turbidity is greater than 50 NTU, increases shall not exceed 10%.
7. The waste discharge shall not produce concentrations of substances in the receiving water that are toxic to or cause detrimental physiological responses in human, animal, or aquatic life.
8. The waste discharge shall not cause concentrations of contaminants to occur at levels that are harmful to human health in waters which are existing or potential sources of drinking water.
9. The concentrations of toxic pollutants in the water column, sediments, or biota shall not adversely affect beneficial uses as a result of the discharge.
10. The waste discharge shall not contain substances that result in increases in BOD, which adversely affect the beneficial uses of the receiving waters.
11. Waters discharged shall not contain biostimulatory substances in concentrations that promote aquatic growth to the extent that such growth causes nuisance or adversely affects beneficial uses.
12. The dissolved sulfide concentration of waters in and near sediments shall not be significantly increased above that present under natural conditions as a result of waters discharged.
13. The waste discharge shall not cause the receiving waters to contain any substance in concentrations that adversely affect any designated beneficial use.
14. The waste discharge shall not alter the natural taste, odor, or color of fish, shellfish, or other surface water resources used for human consumption.
15. The waste discharge shall not result in problems due to breeding of mosquitoes, gnats, black flies, midges, or other pests.
16. The waste discharge shall not result in visible floating particulates, foams, or oil and grease in the receiving waters.
17. The waste discharge shall not alter the color of the receiving waters; create a visual contrast with the natural appearance of the water; or cause aesthetically undesirable discoloration of the receiving waters.
18. Chronic Toxicity Narrative Receiving Water Quality Objective
    a. There shall be no chronic toxicity in ambient waters as a result of the wastes discharged.
    b. Receiving water and effluent toxicity testing shall be performed on the same day as close to concurrently as possible.
19. The waste discharge shall not cause the ammonia water quality objective in the Basin Plan to be exceeded in the receiving waters. Compliance with the ammonia WQOs shall be determined by comparing the receiving water ammonia concentration to the ammonia

REVISED TENTATIVE

water quality objective in the Basin Plan. The ammonia water quality objective can also be calculated using the pH and temperature of the receiving water at the time of collection of the ammonia sample.

B. Groundwater Limitations

The discharge shall not cause the underlying groundwater to be degraded except as consistent with State Board Resolution No. 68-16, exceed water quality objectives, unreasonably affect beneficial uses, or cause a condition of pollution or nuisance.

VI. PROVISIONS

A. Standard Provisions

1. The Permittee shall comply with all Standard Provisions included in Attachment D.
2. **Regional Water Board Standard Provisions.** The Permittee shall comply with the following provisions. In the event that there is any conflict, duplication, or overlap between provisions specified by this Order, the more stringent provision shall apply:

   a. Neither the treatment nor the discharge of pollutants shall create a pollution, contamination, or nuisance as defined by section 13050 of the CWC.

   b. Odors, vectors, and other nuisances of sewage or sludge origin beyond the limits of the treatment plant site or the sewage collection system due to improper operation of facilities, as determined by the Regional Water Board, are prohibited.

   c. All facilities used for collection, transport, treatment, or disposal of wastes shall be adequately protected against damage resulting from overflow, washout, or inundation from a storm or flood having a recurrence interval of once in 100 years.

   d. Collection, treatment, and disposal systems shall be operated in a manner that precludes or impedes public contact with wastewater.

   e. Collected screenings, sludges, and other solids removed from liquid wastes shall be disposed of in a manner approved by the Executive Officer of the Regional Water Board.

   f. The provisions of this order are severable. If any provision of this Order is found invalid, the remainder of this Order shall not be affected.

   g. Nothing in this permit shall be construed to preclude the institution of any legal action or relieve the Permittee from any responsibilities, liabilities or penalties established pursuant to any applicable state law or regulation under authority preserved by section 510 of the CWA.

   h. Nothing in this permit shall be construed to preclude the institution of any legal action or relieve the Permittee from any responsibilities, liabilities or penalties to which the Permittee is or may be subject to under section 311 of the CWA, related to oil and hazardous substances liability.

   i. Discharge of wastes to any point other than specifically described in this Order is prohibited.

   j. The Permittee shall comply with all applicable effluent limitations, national standards of performance, toxic effluent standards, and all federal regulations established pursuant to sections 301, 302, 303(d), 304, 306, 307, 316, 403, and 405 of the federal CWA and amendments thereto.

REVISED TENTATIVE

k. These requirements do not exempt the operator of the waste disposal facility from compliance with any other laws, regulations, or ordinances which may be applicable; they do not legalize this waste disposal facility; and they leave unaffected any further restraints on the disposal of wastes at this site which may be contained in other statutes or required by other agencies.

l. A copy of these waste discharge specifications shall be maintained at the discharge Facility so as to be available at all times to operating personnel.

m. If there is any storage of hazardous or toxic materials or hydrocarbons at this Facility and if the Facility is not manned at all times, a 24-hour emergency response telephone number shall be prominently posted where it can easily be read from the outside.

n. The Permittee shall file with the Regional Water Board a report of waste discharge at least 120 days before making any proposed change in the character, location or volume of the discharge.

o. In the event of any change in name, ownership, or control of these waste disposal facilities, the Permittee shall notify the Regional Water Board of such change and shall notify the succeeding owner or operator of the existence of this Order by letter, a copy of which shall be forwarded to the Regional Water Board, 30 days prior to taking effect.

p. The discharge of any waste resulting from the combustion of toxic or hazardous wastes to any waste stream that ultimately discharges to waters of the United States is prohibited, unless specifically authorized elsewhere in this Order.

q. The Permittee shall notify the Executive Officer in writing no later than 6 months prior to planned discharge of any chemical, other than the products previously reported to the Executive Officer, which may be toxic to aquatic life. Such notification shall include:

   i. Name and general composition of the chemical,

   ii. Frequency of use,

   iii. Quantities to be used,

   iv. Proposed discharge concentrations, and

   v. USEPA registration number, if applicable.

r. Violation of any of the provisions of this Order may subject the Permittee to any of the penalties described herein or in Attachment D of this Order, or any combination thereof, at the discretion of the prosecuting authority; except that only one kind of penalty may be applied for each kind of violation.

s. Failure to comply with provisions or requirements of this Order, or violation of other applicable laws or regulations governing discharges from this Facility, may subject the Permittee to administrative or civil liabilities, criminal penalties, and/or other enforcement remedies to ensure compliance. Additionally, certain violations may subject the Permittee to civil or criminal enforcement from appropriate local, state, or federal law enforcement entities.

t. The CWC provides that any person who violates a waste discharge requirement or a provision of the CWC is subject to civil penalties of up to $5,000 per day, $10,000

REVISED TENTATIVE

per day, or $25,000 per day of violation, or when the violation involves the discharge of pollutants, is subject to civil penalties of up to $10 per gallon per day or $25 per gallon per day of violation, or some combination thereof, depending on the violation, or upon the combination of violations.

u. CWC section 13385(h)(i) requires the Regional Water Board to assess a mandatory minimum penalty of three-thousand dollars ($3,000) for each serious violation. Pursuant to CWC section 13385(h)(2), a "serious violation" is defined as any waste discharge that violates the effluent limitations contained in the applicable waste discharge requirements for a Group II pollutant by 20 percent or more, or for a Group I pollutant by 40 percent or more. Appendix A of 40 CFR § 123.45 specifies the Group I and II pollutants. Pursuant to CWC section 13385.1(a)(1), a "serious violation" is also defined as "a failure to file a discharge monitoring report required pursuant to section 13383 for each complete period of 30 days following the deadline for submitting the report, if the report is designed to ensure compliance with limitations contained in waste discharge requirements that contain effluent limitations."

v. CWC section 13385(i) requires the Regional Water Board to assess a mandatory minimum penalty of three-thousand dollars ($3,000) for each violation whenever a person violates a waste discharge requirement effluent limitation in any period of six consecutive months, except that the requirement to assess the mandatory minimum penalty shall not be applicable to the first three violations within that time period.

w. Pursuant to CWC section 13385.1(d), for the purposes of section 13385.1 and subdivisions (h), (i), and (j) of section 13385, "effluent limitation" means a numeric restriction or a numerically expressed narrative restriction, on the quantity, discharge rate, concentration, or toxicity units of a pollutant or pollutants that may be discharged from an authorized location. An effluent limitation may be final or interim, and may be expressed as a prohibition. An effluent limitation, for these purposes, does not include a receiving water limitation, a compliance schedule, or a best management practice.

x. CWC section 13387(e) provides that any person who knowingly makes any false statement, representation, or certification in any record or other document submitted or required to be maintained under this order, including monitoring reports or reports of compliance or noncompliance, or who knowingly falsifies, tampers with, or renders inaccurate any monitoring device or method required to be maintained in this order shall be punished by a fine of not more than twenty-five thousand dollars ($25,000), imprisonment pursuant to subdivision (h) of Section 1170 of the Penal Code for 16, 20, or 24 months, or by both that fine and imprisonment. For a subsequent conviction, such a person shall be punished by a fine of not more than twenty-five thousand dollars ($25,000) per day of violation, by imprisonment pursuant to subdivision (h) of Section 1170 of the Penal Code for two, three, or four years, or by both that fine and imprisonment.

y. In the event the Permittee does not comply or will be unable to comply for any reason, with any prohibition, effluent limitation, or receiving water limitation of this Order, the Permittee shall notify the Chief of the Watershed Regulatory Section at the Regional Water Board by telephone (213) 576-6616, or by fax at (213) 576-6660 within 24 hours of having knowledge of such noncompliance, and shall confirm this notification in writing to the Regional Water Board within five days, unless the Regional Water Board waives confirmation. The written notification shall state the

REVISED TENTATIVE

nature, time, duration, and cause of noncompliance, and shall describe the measures being taken to remedy the current noncompliance and, prevent recurrence including, where applicable, a schedule of implementation. The written notification shall also be submitted via email with reference to CI-5542 to losangeles@waterboards.ca.gov. Other noncompliance requires written notification as above at the time of the normal monitoring report

z. The Permittee shall investigate the feasibility of recycling, conservation, and/or alternative disposal methods of wastewater (such as groundwater injection), and/or use of storm water and dry-weather urban runoff. The Permittee submitted a feasibility study on January 3, 2014. The Permittee shall submit an update to this feasibility study as part of the submittal of the Report of Waste Discharge (ROWD) for the next permit renewal.

B. Monitoring and Reporting Program (MRP) Requirements

The Permittee shall comply with the MRP and future revisions thereto, in Attachment E.

C. Special Provisions

1. **Reopener Provisions**

a. This Order may be modified, revoked and reissued, or terminated for cause, including, but not limited to:

i. Violation of any term or condition contained in this Order;

ii. Obtaining this Order by misrepresentation, or by failure to disclose fully all relevant facts; or

iii. A change in any condition that requires either a temporary or permanent reduction or elimination of the authorized discharge.

The filing of a request by the Permittee for an Order modification, revocation, and issuance or termination, or a notification of planned changes or anticipated noncompliance does not stay any condition of this Order.

b. This Order may be reopened for modification, or revocation and reissuance, as a result of the detection of a reportable priority pollutant generated by special conditions included in this Order. These special conditions may be, but are not limited to, fish tissue sampling, whole effluent toxicity testing, monitoring of internal waste stream(s), and monitoring for surrogate parameters. Additional requirements may be included in this Order as a result of the special condition monitoring data.

c. This Order may be modified, in accordance with the provisions set forth in title 40 of the Code of Federal Regulations (40 CFR) parts 122 and 124 to include requirements for the implementation of a watershed protection management approach.

d. The Board may modify, or revoke and reissue this Order if present or future investigations demonstrate that the discharge(s) governed by this Order will cause, have reasonable potential to cause, or contribute to adverse impacts on beneficial uses or degradation of the water quality of the receiving waters.

e. This Order may also be modified, revoked, and reissued or terminated in accordance with the provisions of 40 CFR parts 122.44, 122.62 to 122.64, 125.62, and 125.64. Causes for taking such actions include, but are not limited to, failure to

REVISED TENTATIVE

comply with any condition of this Order, endangerment to human health or the environment resulting from the permitted activity, or acquisition of newly obtained information which would have justified the application of different conditions if known at the time of Order adoption. The filing of a request by the Permittee for an Order modification, revocation and issuance, or termination, or a notification of planned changes or anticipated noncompliance does not stay any condition of this Order.

f. This Order may be modified, in accordance with the provisions set forth in 40 CFR parts 122 to 124, to include new minimum levels (MLs).

g. If an applicable toxic effluent standard or prohibition (including any schedule of compliance specified in such effluent standard or prohibition) is promulgated under section 307(a) of the CWA for a toxic pollutant and that standard or prohibition is more stringent than any limitation on the pollutant in this Order, the Regional Water Board may institute proceedings under these regulations to modify or revoke and reissue the Orders to conform to the toxic effluent standard or prohibition.

h. If more stringent applicable water quality standards are promulgated or approved pursuant to section 303 of the CWA, or amendments, thereto, the Regional Water Board will revise and modify this Order in accordance with such standards.

i. This Order may be reopened and modified, to add or revise effluent limitations as a result of future Basin Plan Amendments, such as an update of a water quality objective, the adoption of a site specific objective, the adoption of a new Total Maximum Daily Load (TMDL) for the San Gabriel River Watershed or a revision of any of the TMDLs within the San Gabriel River Watershed.

j. This Order may be reopened and modified, to revise effluent limitations as a result of the delisting of a pollutant from the 303(d) list.

k. This Order will be reopened and modified to revise any and all of the chronic toxicity testing provisions and effluent limitations, to the extent necessary, to be consistent with any Toxicity Plan that is subsequently adopted by the State Water Board promptly after USEPA-approval of such Plan.

l. This Order will be reopened and modified to the extent necessary, to be consistent with new policies, a new state-wide plan, new laws, or new regulations.

m. This Order may be reopened to modify effluent limits if the lead, copper or selenium waste load allocations are revised, following USEPA approval of a revised Metals TMDL for the San Gabriel River.

n. Upon the request of the Permittee, the Regional Water Board will review future studies conducted by the Permittee to evaluate the appropriateness of utilizing dilution credits and/or attenuation factors if they are demonstrated to be appropriate and protective of the GWR beneficial use, on a pollutant-by-pollutant basis. Following this evaluation, this Order may be reopened to modify final effluent limitations, if at the conclusion of necessary studies conducted by the Permittee, the Regional Water Board determines that dilution credits, attenuation factors, or metal translators are warranted.

o. This Order may be reopened to make the necessary modifications for the Indirect Reuse and Replenishment Project (IRRP) once the Title 22 Engineering Report is approved by the State Water Resource Control Board Division of Drinking Water (DDW) and the WRR for the facility has been adopted.

REVISED TENTATIVE

2. **Special Studies, Technical Reports and Additional Monitoring Requirements**

a. **Toxicity Reduction Requirements**

The Permittee shall prepare and submit a copy of the Permittee's initial investigation Toxicity Reduction Evaluation (TRE) work plan to the Executive Officer of the Regional Water Board in accordance with Monitoring and Reporting Section V.A.6.

b. **Ammonia Site Specific Objective Evaluation**

The Permittee shall prepare and submit an annual "Ammonia Site-Specific Objective Evaluation" report on May 15th of each year. This report will include the following:

i. Concurrent increases in hardness and sodium (measured as alkalinity) have been linked to decreases in ammonia sensitivity[20] and a relationship consistent with these findings was observed in the LA County SSO study. Therefore, on an annual basis, receiving water hardness and alkalinity will be evaluated and compared to conditions observed from 2000 through 2007. If the current year's annual mean hardness and alkalinity is 25% lower than the 2000 through 2007 mean, the Discharger will initiate quarterly receiving water chronic testing using the invertebrate Ceriodaphnia dubia at the downstream receiving water location 100 feet below the outfall. Results from this toxicity testing will be evaluated to determine if waste discharged ammonia is causing toxicity (see section (ii) below for details on this evaluation).

ii. Evaluation of all receiving water toxicity will be conducted to determine if waste discharged ammonia was a likely cause of any observed toxicity. If it is determined that observed receiving toxicity is caused by waste discharged ammonia and discharged ammonia levels were below the SSO adjusted ammonia water quality objective, the Discharger shall develop and submit a plan for reevaluating the SSO to the Executive Officer.

iii. Compare downstream ammonia measurements with calculated objectives to ensure adequate protection of beneficial uses. If it is determined that downstream receiving water ammonia objectives are not being met, the Discharger shall evaluate if waste discharged ammonia concentrations below the SSO adjusted ammonia water quality objective are responsible for the downstream objective exceedances.

iv. Sampling observations and other available information will be evaluated every two years to determine if winter spawning fish species are present in Reach 2 of the San Gabriel River or the Rio Hondo. If winter spawning fish were observed, the Discharger will propose a plan to evaluate if significant numbers of early life-stage (ELS) fish are present during the period of October 1st to March 31st (ELS absent). This plan will identify appropriate methods for gathering additional information to determine if the Basin Plan ELS implementation provisions for the ammonia objective are protective of the species and life stages present.

REVISED TENTATIVE

[20] April 2007. Arid West Water Quality Research Project Special Studies Final Report, 07-03-P-139257-0207. Relative Role of Sodium and Alkalinity vs. Hardness in Controlling Acute Ammonia Toxicity. Report prepared by Parametrix Environmental Research Lab in collaboration with GEI Consultants, Chadwick Ecological Division.

c. **Treatment Facility Capacity**

The Permittee shall submit a written report to the Executive Officer of the Regional Water Board within 90 days after the "30-day (monthly) average" daily dry-weather flow equals or exceeds 75 percent of the design capacity of waste treatment and/or disposal facilities. The Permittee's senior administrative officer shall sign a letter, which transmits that report and certifies that the Permittee's policy-making body is adequately informed of the report's contents. The report shall include the following:

i. The average daily flow for the month, the date on which the peak flow occurred, the rate of that peak flow, and the total flow for the day;

ii. The best estimate of when the monthly average daily dry-weather flow rate will equal or exceed the design capacity of the facilities; and,

iii. A schedule for studies, design, and other steps needed to provide additional capacity for waste treatment and/or disposal facilities before the discharge flow rate equals the capacity of present units.

This requirement is applicable to those facilities which have not reached 75 percent of capacity as of the effective date of this Order. For those facilities that have reached 75 percent of capacity by that date but for which no such report has been previously submitted, such a report shall be filed within 90 days of the issuance of this Order.

d. **Special Study for Constituents of Emerging Concern (CECs)**

The Permittee has completed the two minimum required annual CECs Monitoring events.

3. **Best Management Practices and Pollution Prevention**

a. **Storm Water Pollution Prevention Plan (SWPPP)** – Not Applicable

b. **Spill Clean-up Contingency Plan (SCCP)**

Within 90 days of the effective date of this Order, the Permittee is required to submit a SCCP, which describes the activities and protocols to address clean-up of spills, overflows, and bypasses of untreated or partially treated wastewater from the Permittee's collection system or treatment facilities that reach water bodies, including dry channels and beach sands. At a minimum, the plan shall include sections on spill clean-up and containment measures, public notification, and monitoring. The Permittee shall review and amend the plan as appropriate after each spill from the Facility or in the service area of the Facility. The Permittee shall include a discussion in the annual summary report of any modifications to the Plan and the application of the Plan to all spills during the year.

c. **Pollutant Minimization Program (PMP)**

Reporting protocols in the MRP describe sample results that are to be reported as Detected but Not Quantified (DNQ) or Not Detected (ND). Definitions for a reported Minimum Level (ML) and Method Detection Limit (MDL) are provided in Attachment A. These reporting protocols and definitions are used in determining the need to conduct a PMP as follows:

The Permittee shall develop and conduct a PMP as further described below when there is evidence (e.g., sample results reported as DNQ when the effluent limitation

REVISED TENTATIVE

is less than the MDL; sample results from analytical methods more sensitive than those methods required by this Order; presence of whole effluent toxicity; health advisories for fish consumption; or, results of benthic or aquatic organism tissue sampling) that a pollutant is present in the effluent above an effluent limitation and either of the following is true:

i. The concentration of the pollutant is reported as DNQ and the effluent limitation is less than the reported ML; or,

ii. The concentration of the pollutant is reported as ND and the effluent limitation is less than the MDL, using definitions described in Attachment A and reporting protocols described in the MRP.

The goal of the PMP shall be to reduce all potential sources of a pollutant through pollutant minimization (control) strategies, including pollution prevention measures as appropriate, to maintain the effluent concentration at or below the effluent limitation. Pollution prevention measures may be particularly appropriate for persistent bioaccumulative priority pollutants where there is evidence that beneficial uses are being impacted. The Regional Water Board may consider cost-effectiveness when establishing the requirements of a PMP. The completion and implementation of a Pollution Prevention Plan (PPP), if required pursuant to CWC section 13263.3(d), shall be considered to fulfill the PMP requirements.

The PMP shall include, but not be limited to, the following actions and submittals acceptable to the Regional Water Board:

i. An annual review and semi-annual monitoring of potential sources of the reportable pollutant(s), which may include fish tissue monitoring and other bio-uptake sampling;

ii. Quarterly monitoring for the reportable pollutant(s) in the influent to the wastewater treatment system;

iii. Submittal of a control strategy designed to proceed toward the goal of maintaining concentrations of the reportable pollutant(s) in the effluent at or below the effluent limitation;

iv. Implementation of appropriate cost-effective control measures for the reportable pollutant(s), consistent with the control strategy; and

v. An annual status report that shall be sent to the Regional Water Board including:

(1). All PMP monitoring results for the previous year;

(2). A list of potential sources of the reportable pollutant(s);

(3). A summary of all actions undertaken pursuant to the control strategy; and

(4). A description of actions to be taken in the following year.

4. **Construction, Operation and Maintenance Specifications**

a. Wastewater treatment facilities subject to this Order shall be supervised and operated by persons possessing certificates of appropriate grade pursuant to California Code of Regulations (CCR), title 23, division 3, chapter 26 (CWC sections 13625 – 13633).

REVISED TENTATIVE

b. The Permittee shall maintain in good working order a sufficient alternate power source for operating the wastewater treatment and disposal facilities. All equipment shall be located to minimize failure due to moisture, liquid spray, flooding, and other physical phenomena. The alternate power source shall be designed to permit inspection and maintenance and shall provide for periodic testing. If such alternate power source is not in existence, the Permittee shall halt, reduce, or otherwise control all discharges upon the reduction, loss, or failure of the primary source of power.

c. The Permittee shall provide standby or emergency power facilities and/or storage capacity or other means so that in the event of Facility upset or outage due to power failure or other cause, discharge of raw or inadequately treated sewage does not occur.

5. **Special Provisions for Municipal Facilities (POTWs Only)**

a. **Sludge Disposal Requirements – (**Not Applicable)

b. **Pretreatment Requirements**

i. The Permittee has developed and implemented a Pretreatment Program that was previously submitted to this Regional Water Board. This Order requires implementation of the approved Pretreatment Program. Any violation of the Pretreatment Program will be considered a violation of this Order.

ii. In 1972, the County Sanitation District of Los Angeles County's (Sanitation District) Board of Directors adopted the Wastewater Ordinance. The purpose of this Ordinance is to establish controls on users of the Sanitation District's sewerage system in order to protect the environment and public health, and to provide for the maximum beneficial use of the Sanitation District's facilities. This Wastewater Ordinance, as amended July 1, 1998, shall supersede all previous regulations and policies of the Sanitation Districts' governing items covered in this Ordinance. Specifically, the provisions of this Ordinance shall supersede the Districts' "Policy Governing Use of District Trunk Sewers" dated December 6, 1961, and shall amend the Sanitation Districts' "An Ordinance Regulating Sewer Construction, Sewer Use and Industrial Wastewater Discharges," dated April 1, 1972, and as amended July 1, 1975, July 1, 1980, July 1, 1983, and November 1, 1989.

iii. In 2012, there were 429 CIU Permittees, 1,025 SIU Permittees, and 1,640 other industrial users in the Sanitation District's Pretreatment Program.

iv. Any change to the program shall be reported to the Regional Water Board in writing and shall not become effective until approved by the Executive Officer in accordance with procedures established in 40 CFR § 403.18.

v. Applications for renewal or modification of this Order must contain information about industrial discharges to the POTW pursuant to 40 CFR § 122.21(j)(6). Pursuant to 40 CFR § 122.42(b) and provision VII. A of Attachment D, Standard Provisions, of this Order, the Permittee shall provide adequate notice of any new introduction of pollutants or substantial change in the volume or character of pollutants from industrial discharges which were not included in the permit application. Pursuant to 40 CFR § 122.44(j)(1), the Permittee shall annually identify and report, in terms of character and volume of pollutants, any

REVISED TENTATIVE

Significant Industrial Users discharging to the POTW subject to Pretreatment Standards under section 307(b) of the CWA and 40 CFR § 403.

vi. The Permittee shall evaluate whether its pretreatment local limits are adequate to meet the requirements of this Order and shall submit a written technical report as required under section B.1 of Attachment H. The San Jose Creek WRP is part of the Joint Outfall System (JOS), consisting of the Joint Water Pollution Control Plant (JWPCP) and the upstream plants. In the reevaluation of the local limits, the Permittee shall consider the effluent limitations contained in this Order, the contributions from the upstream WRPs in the JOS, and other relevant factors due to the interconnection of the Districts' WRPs within the JOS. The Permittee shall submit to the Regional Board revised local limits, as necessary, for Regional Water Board approval based on the schedule specified in the NPDES Permit issued to the JWPCP. In addition, the Permittee shall consider collection system overflow protection from such constituents as oil and grease, etc.

vii. The Permittee shall comply with requirements contained in Attachment H – Pretreatment Reporting Requirements.

c. **Collection System Requirements**

The Permittee's collection system is part of the system that is subject to this Order. As such, the Permittee must properly operate and maintain its collection system (40 CFR § 122.41(e)). The Permittee must report any non-compliance (40 CFR § 122.41(l)(6) and (7)) and mitigate any discharge from the collection system in violation of this Order (40 CFR § 122.41(d)). See the Order at Attachment D, subsections I.D, V.E, V.H, and I.C., and the following section of this Order.

d. **Filter Bypass**

Conditions pertaining to bypass are contained in Attachment D, Section I. Standard Provisions – Permit Compliance, subsection G. The bypass or overflow of untreated or partially treated wastewater to waters of the State is prohibited, except as allowed under conditions stated in 40 CFR part 122.41(m) and (n). Consistent with those provisions, during periods of elevated, wet-weather flows, the operational diversion of a portion of the secondarily treated wastewater around the tertiary filters is allowable provided that the resulting combined discharge of fully treated (tertiary) and partially treated (secondary) wastewater complies with the effluent and receiving water limitations in this Order.

6. **Spill Reporting Requirements**

a. **Initial Notification**

Although State and Regional Water Board staff do not have duties as first responders, this requirement is an appropriate mechanism to ensure that the agencies that do have first responder duties are notified in a timely manner in order to protect public health and beneficial uses. For certain spills, overflows and bypasses, the Permittee shall make notifications as required below:

i. In accordance with the requirements of Health and Safety Code section 5411.5, the Permittee shall provide notification to the local health officer or the director of environmental health with jurisdiction over the affected water body of any unauthorized release of sewage or other waste that causes, or probably

REVISED TENTATIVE

will cause, a discharge to any waters of the state as soon as possible, but no later than two hours after becoming aware of the release.

ii. In accordance with the requirements of CWC section 13271, the Permittee shall provide notification to the California Office Emergency Services (OES) of the release of reportable amounts of hazardous substances or sewage that causes, or probably will cause, a discharge to any waters of the state as soon as possible, but not later than two hours after becoming aware of the release. The CCR, Title 23, section 2250, defines a reportable amount of sewage as being 1,000 gallons. The phone number for reporting these releases to the OES is (800) 852-7550.

iii. The Permittee shall notify the Regional Water Board of any unauthorized release of sewage from its POTW that causes, or probably will cause, a discharge to a water of the state as soon as possible, but not later than two hours after becoming aware of the release. This initial notification does not need to be made if the Permittee has notified OES and the local health officer or the director of environmental health with jurisdiction over the affected water body. The phone number for reporting these releases of sewage to the Regional Water Board is (213) 576-6657. The phone numbers for after hours and weekend reporting of releases of sewage to the Regional Water Board are (213) 305-2284 and (213) 305-2253.

At a minimum, the following information shall be provided to the Regional Water Board:

(1). The location, date, and time of the release;

(2). The route of the spill including the water body that received or will receive the discharge;

(3). An estimate of the amount of sewage or other waste released and the amount that reached a surface water at the time of notification;

(4). If ongoing, the estimated flow rate of the release at the time of the notification; and,

(5). The name, organization, phone number and email address of the reporting representative.

b. **Monitoring**

For spills, overflows and bypasses reported under section VI.C.6.a, the Permittee shall monitor as required below:

i. To define the geographical extent of the spill's impact, the Permittee shall obtain grab samples (if feasible, accessible, and safe) for all spills, overflows or bypasses of any volume that reach any waters of the state (including surface and ground waters). The Permittee shall analyze the samples for total coliform, fecal coliform, E. coli (if fecal coliform test shows positive), and enterococcus (if the spill reaches the marine waters), and relevant pollutants of concern, upstream and downstream of the point of entry of the spill (if feasible, accessible, and safe). This monitoring shall be done on a daily basis from the time the spill is known until the results of two consecutive sets of bacteriological monitoring indicate the return to the background level or the County Department of Public Health authorizes cessation of monitoring.

REVISED TENTATIVE

c. **Reporting**

The initial notification required under section VI.C.6.a shall be followed by:

i. As soon as possible, but not later than twenty-four hours after becoming aware of an unauthorized discharge of sewage or other waste from its wastewater treatment plant to a water of the state, the Permittee shall submit a statement to the Regional Water Board by email at augustine.anijielo@waterboards.ca.gov. If the discharge is 1,000 gallons or more, this statement shall certify that OES has been notified of the discharge in accordance with CWC section 13271. The statement shall also certify that the local health officer or director of environmental health with jurisdiction over the affected water bodies has been notified of the discharge in accordance with Health and Safety Code section 5411.5. The statement shall also include at a minimum the following information:

(1). Agency, NPDES No., Order No., and MRP CI No., if applicable;

(2). The location, date, and time of the discharge;

(3). The water body that received the discharge;

(4). A description of the level of treatment of the sewage or other waste discharged;

(5). An initial estimate of the amount of sewage or other waste released and the amount that reached a surface water;

(6). The OES control number and the date and time that notification of the incident was provided to OES; and,

(7). The name of the local health officer or director of environmental health representative notified (if contacted directly); the date and time of notification; and the method of notification (e.g., phone, fax, email).

ii. A written preliminary report five working days after disclosure of the incident is required. Submission to the Regional Water Board of the California Integrated Water Quality System (CIWQS) Sanitary Sewer Overflow (SSO) event number shall satisfy this requirement. Within 30 days after submitting the preliminary report, the Permittee shall submit the final written report to this Regional Water Board. (A copy of the final written report, for a given incident, already submitted pursuant to a statewide General WDRs for Wastewater Collection System Agencies (SSO WDR), may be submitted to the Regional Water Board to satisfy this requirement.) The written report shall document the information required in paragraph d below, monitoring results and any other information required in provisions of the Standard Provisions document including corrective measures implemented or proposed to be implemented to prevent/minimize future occurrences. The Executive Officer, for just cause, may grant an extension for submittal of the final written report.

iii. The Permittee shall include a certification in the annual summary report (due according to the schedule in the MRP) that states that the sewer system emergency equipment, including alarm systems, backup pumps, standby power generators, and other critical emergency pump station components were maintained and tested in accordance with the Permittee's preventive

REVISED TENTATIVE

maintenance plan. Any deviations from or modifications to the plan shall be discussed.

d. **Records**

The Permittee shall develop and maintain a record of all spills, overflows or bypasses of raw or partially treated sewage from its collection system or treatment plant. This record shall be made available to the Regional Water Board upon request and a spill summary shall be included in the annual summary report. The records shall contain:

i. The date and time of each spill, overflow, or bypass;

ii. The location of each spill, overflow, or bypass;

iii. The estimated volume of each spill, overflow, and bypass including gross volume, amount recovered and amount not recovered, monitoring results as required by section VI.C.6.b;

iv. The cause of each spill, overflow, or bypass;

v. Whether each spill, overflow, or bypass entered a receiving water and, if so, the name of the water body and whether it entered via storm drains or other man-made conveyances;

vi. Any mitigation measures implemented;

vii. Any corrective measures implemented or proposed to be implemented to prevent/minimize future occurrences; and,

viii. The mandatory information included in SSO online reporting for finalizing and certifying the SSO report for each spill, overflow, or bypass under the SSO WDR.

e. **Activities Coordination**

Although not required by this Order, Regional Water Board expects that the POTW's owners/operators will coordinate their compliance activities for consistency and efficiency with other entities that have responsibilities to implement: (i) this NPDES permit, including the Pretreatment Program, (ii) a MS4 NPDES permit that may contain spill prevention, sewer maintenance, reporting requirements and (iii) the SSO WDR.

f. **Consistency with SSO WDRs**

The CWA prohibits the discharge of pollutants from point sources to surface waters of the United States unless authorized under an NPDES permit. (33 United States Code sections1311 &1342). The State Water Board adopted General Waste Discharge Requirements for Sanitary Sewer Systems, (WQ Order No. 2006-0003-DWQ; SSO WDR) on May 2, 2006, to provide a consistent, statewide regulatory approach to address sanitary sewer overflows. The SSO WDR requires public agencies that own or operate sanitary sewer systems to apply for coverage under the SSO WDR, develop and implement sewer system management plans, and report all SSOs to the State Water Board's online SSOs database. Regardless of the coverage obtained under the SSO WDR, the Permittee's collection system is part of the POTW that is subject to this NPDES permit. As such, pursuant to federal regulations, the Permittee must properly operate and maintain its collection system

REVISED TENTATIVE

(40 CFR § 122.41 (e)), report any non-compliance (40 CFR § 122.41(1)(6) and (7)), and mitigate any discharge from the collection system in violation of this NPDES permit (40 CFR § 122.41(d)).

The requirements contained in this Order in sections VI.C.3.b (SCCP Plan section), VI.C.4 (Construction, Operation and Maintenance Specifications section), and VI.C.6 (Spill Reporting Requirements section) are intended to be consistent with the requirements of the SSO WDR. The Regional Water Board recognizes that there may be some overlap between these NPDES permit provisions and SSO WDR requirements, related to the collection systems. The requirements of the SSO WDR are considered the minimum thresholds (see finding 11 of State Water Board Order No. 2006-0003-DWQ). To encourage efficiency, the Regional Water Board will accept the documentation prepared by the Permittees under the SSO WDR for compliance purposes as satisfying the requirements in sections VI.C.3.b, VI.C.4, and VI.C.6 provided the more stringent provisions contained in this NPDES permit are also addressed. Pursuant to SSO WDR, section D, provision 2(iii) and (iv), the provisions of this NPDES permit supersede the SSO WDR, for all purposes, including enforcement, to the extent the requirements may be deemed duplicative

7. **Compliance Schedules –Not Applicable**

There are no compliance schedules included in this NPDES Order.

VII. COMPLIANCE DETERMINATION

Compliance with the effluent limitations contained in section IV of this Order will be determined as specified below:

A. General

Compliance with effluent limitations for priority pollutants shall be determined using sample reporting protocols defined in the MRP and Attachment A of this Order. For purposes of reporting and administrative enforcement by the Regional and State Water Boards, the Permittee shall be deemed out of compliance with effluent limitations if the concentration of the priority pollutant in the monitoring sample is greater than the effluent limitation and greater than or equal to the reporting level (RL).

B. Multiple Sample Data

When determining compliance with a measure of central tendency (arithmetic mean, geometric mean, median, etc.) of multiple sample analyses and the data set contains one or more reported determinations of DNQ or ND, the Permittee shall compute the median in place of the arithmetic mean in accordance with the following procedure:

1. The data set shall be ranked from low to high, ranking the reported ND determinations lowest, DNQ determinations next, followed by quantified values (if any). The order of the individual ND or DNQ determinations is unimportant.

2. The median value of the data set shall be determined. If the data set has an odd number of data points, then the median is the middle value. If the data set has an even number of data points, then the median is the average of the two values around the middle unless one or both of the points are ND or DNQ, in which case the median value shall be the lower of the two data points where DNQ is lower than a value and ND is lower than DNQ.

REVISED TENTATIVE

C. Average Monthly Effluent Limitation (AMEL)

If the average (or when applicable, the median determined by subsection B above for multiple sample data) of daily discharges over a calendar month exceeds the AMEL for a given parameter, this will represent a single violation, though the Permittee may be considered out of compliance for each day of that month for that parameter (e.g., resulting in 31 days of non-compliance in a 31-day month). If only a single sample is taken during the calendar month and the analytical result for that sample exceeds the AMEL, the Permittee may be considered out of compliance for that calendar month. The Permittee will only be considered out of compliance for days when the discharge occurs. For any one calendar month during which no sample (daily discharge) is taken, no compliance determination can be made for that calendar month with respect to the AMEL.

If the analytical result of a single sample, monitored monthly, quarterly, semiannually, or annually, does not exceed the AMEL for a given parameter, the Permittee will have demonstrated compliance with the AMEL for each day of that month for that parameter.

If the analytical result of any single sample, monitored monthly, quarterly, semiannually, or annually, exceeds the AMEL for any parameter, the Permittee may collect up to four additional samples within the same calendar month. All analytical results shall be reported in the monitoring report for that month. The concentration of pollutant (an arithmetic mean or a median) in these samples estimated from the “Multiple Sample Data Reduction” section above, will be used for compliance determination.

In the event of noncompliance with an AMEL, the sampling frequency for that parameter shall be increased to weekly and shall continue at this level until compliance with the AMEL has been demonstrated.

D. Average Weekly Effluent Limitation (AWEL)

If the average of daily discharges over a calendar week exceeds the AWEL for a given parameter, an alleged violation will be flagged and the Permittee will be considered out of compliance for each day of that week for that parameter, resulting in 7 days of non-compliance. The average of daily discharges over the calendar week that exceeds the AWEL for a parameter will be considered out of compliance for that week only. If only a single sample is taken during the calendar week and the analytical result for that sample exceeds the AWEL, the Permittee will be considered out of compliance for that calendar week. For any one calendar week during which no sample (daily discharge) is taken, no compliance determination can be made for that calendar week with respect to the AWEL.

A calendar week will begin on Sunday and end on Saturday. Partial calendar weeks at the end of calendar month will be carried forward to the next month in order to calculate and report a consecutive seven-day average value on Saturday.

E. Maximum Daily Effluent Limitation (MDEL)

If a daily discharge exceeds the MDEL for a given parameter, an alleged violation will be flagged and the Permittee will be considered out of compliance for that parameter for that one day only within the reporting period. If no sample (daily discharge) is taken over a calendar day, no compliance determination can be made for that day with respect to effluent violation determination, but compliance determination can be made for that day with respect to reporting violation determination.

REVISED TENTATIVE

F. Instantaneous Minimum Effluent Limitation

If the analytical result of a single grab sample is lower than the instantaneous minimum effluent limitation for a parameter, an alleged violation will be flagged and the Permittee will be considered out of compliance for that parameter for that single sample. Non-compliance for each sample will be considered separately (e.g., the results of two grab samples taken within a calendar day that both are lower than the instantaneous minimum effluent limitation would result in two instances of non-compliance with the instantaneous minimum effluent limitation).

G. Instantaneous Maximum Effluent Limitation

If the analytical result of a single grab sample is higher than the instantaneous maximum effluent limitation for a parameter, an alleged violation will be flagged and the Permittee will be considered out of compliance for that parameter for that single sample. Non-compliance for each sample will be considered separately (e.g., the results of two grab samples taken within a calendar day that both exceed the instantaneous maximum effluent limitation would result in two instances of non-compliance with the instantaneous maximum effluent limitation).

H. Six-month Median Effluent Limitation

If the median of daily discharges over any 180-day period exceeds the six-month median effluent limitation for a given parameter, an alleged violation will be flagged and the Permittee will be considered out of compliance for each day of that 180-day period for that parameter. The next assessment of compliance will occur after the next sample is taken. If only a single sample is taken during a given 180-day period and the analytical result for that sample exceeds the six-month median, the Permittee will be considered out of compliance for the 180-day period. For any 180-period during which no sample is taken, no compliance determination can be made for the six-month median effluent limitation.

I. Monthly Median Effluent Limitation (MMEL)

If the median of daily discharges over a calendar month exceeds the MMEL for a given parameter, an alleged violation will be flagged and the Permittee will be considered out of compliance for each day of that month for that parameter (e.g., resulting in 31 days of non-compliance in a 31-day month). However, an alleged violation of the MMEL will be considered one violation for the purpose of assessing State mandatory minimum penalties. If no sample (daily discharge) is taken over a calendar month, no compliance determination can be made for that month with respect to effluent violation determination, but compliance determination can be made for that month with respect to reporting violation determination.

J. Chronic Toxicity

The discharge is subject to determination of “Pass” or “Fail” from a chronic toxicity test using the Test of Significant Toxicity (TST) statistical t-test approach described in *National Pollutant Discharge Elimination System Test of Significant Toxicity Implementation Document* (EPA 833-R-10-003, 2010), Appendix A, Figure A-1 and Table A-1, and Appendix B, Table B-1. The null hypothesis (Ho) for the TST statistical approach is: Mean discharge IWC response ≤0.75 × Mean control response. A test result that rejects this null hypothesis is reported as “Pass”. A test result that does not reject this null hypothesis is reported as “Fail”. The relative “Percent Effect” at the discharge IWC is defined and reported as: ((Mean control response - Mean discharge IWC response) ÷ Mean control response)) × 100. This is a t-test (formally Student’s t-Test), a statistical analysis comparing two sets of replicate observations—in the case of WET, only two test concentrations (i.e., a control and IWC). The purpose of this statistical test is to determine if the means of the two sets of observations are different (i.e., if the IWC or

REVISED TENTATIVE

receiving water concentration differs from the control (the test result is “Pass” or “Fail”)). The Welch’s t-test employed by the TST statistical approach is an adaptation of Student’s t-test and is used with two samples having unequal variances.

The Maximum Daily Effluent Limitation (MDEL) for chronic toxicity is exceeded and a violation will be flagged when a chronic toxicity test, analyzed using the TST statistical approach, results in “Fail” and the “Percent Effect” is ≥0.50.

The Median Monthly Effluent Limitation (MMEL) for chronic toxicity is exceeded and a violation will be flagged when the median of no more than three independent chronic toxicity tests, conducted within the same calendar month and analyzed using the TST statistical approach, results in “Fail”. The MMEL for chronic toxicity shall only apply when there is a discharge more than one day in a calendar month period. During such calendar months, up to three independent toxicity tests may be conducted when one toxicity test results in “Fail”.

The chronic toxicity MDEL and MMEL are set at the IWC for the discharge (100% effluent) and expressed in units of the TST statistical approach (“Pass” or “Fail”, “Percent Effect”). All NPDES effluent compliance monitoring for the chronic toxicity MDEL and MMEL shall be reported using the 100% effluent concentration and negative control, expressed in units of the TST. The TST hypothesis (Ho) (see above) is statistically analyzed using the IWC and a negative control. Effluent toxicity tests shall be run using a multi-concentration test design when required by *Short-term Methods for Estimating the Chronic Toxicity of Effluents and Receiving Waters to Freshwater Organisms* (U.S. EPA 2002, EPA-821-R-02-013). The Regional Water Board’s review of reported toxicity test results will include review of concentration-response patterns as appropriate (see Fact Sheet discussion at IV.C.5). As described in the bioassay laboratory audit directives to the San Jose Creek Water Quality Laboratory from the State Water Resources Control Board dated August 7, 2014, and from the USEPA dated December 24, 2013, the Percent Minimum Significant Difference (PMSD) criteria only apply to compliance reporting for the NOEC and the sublethal statistical endpoints of the NOEC, and therefore are not used to interpret TST results. Standard Operating Procedures used by the toxicity testing laboratory to identify and report valid, invalid, anomalous, or inconclusive effluent (and receiving water) toxicity test measurement results from the TST statistical approach, including those that incorporate a consideration of concentration-response patterns, must be submitted to the Regional Water Board (40 CFR 122.41(h)). The Regional Water Board will make a final determination as to whether a toxicity test result is valid, and may consult with the Permittee, USEPA, the State Water Board’s Quality Assurance Officer, or the State Water Board’s Environmental Laboratory Accreditation Program as needed. The Board may consider results of any TIE/TRE studies in an enforcement action.

K. Percent Removal

The average monthly percent removal is the removal efficiency expressed in percentage across a treatment plant for a given pollutant parameter, as determined from the 30-day average values of pollutant concentrations (C in mg/L) of influent and effluent samples collected at about the same time using the following equation:

Percent Removal (%) = [1-(CEffluent/CInfluent)] x 100 %

When preferred, the Permittee may substitute mass loadings and mass emissions for the concentrations.

L. Mass and Concentration Limitations

REVISED TENTATIVE

Compliance with mass and concentration effluent limitations for the same parameter shall be determined separately with their respective limitations. When the concentration of a constituent in an effluent sample is determined to be ND or DNQ, the corresponding mass emission rate determined from that sample concentration shall also be reported as ND or DNQ.

M. Compliance with Single Constituent Effluent Limitations

Permittees may be considered out of compliance with the effluent limitation if the concentration of the pollutant (see section B "Multiple Sample Data Reduction" above) in the monitoring sample is greater than the effluent limitation and greater than or equal to the RL.

N. Compliance with effluent limitations expressed as a sum of several constituents

Permittees are out of compliance with an effluent limitation which applies to the sum of a group of chemicals (e.g., PCB's) if the sum of the individual pollutant concentrations is greater than the effluent limitation. Individual pollutants of the group will be considered to have a concentration of zero if the constituent is reported as ND or DNQ.

O. Compliance with 2,3,7,8-TCDD Equivalents

TCDD equivalents shall be calculated using the following formula, where the Minimum Levels (MLs), and toxicity equivalency factors (TEFs) are as provided in the table below. The Permittee shall report all measured values of individual congeners, including data qualifiers. When calculating TCDD equivalents, the Permittee shall set congener concentrations below the minimum levels to zero. USEPA method 1613 may be used to analyze dioxin and furan congeners.

$$Dioxin\ Concentration = \sum_{1}^{17}(TEQi) = \sum_{1}^{17}(Ci)(TEFi)$$

where:

Ci = individual concentration of a dioxin or furan congener

TEFi = individual TEF for a congener

MLs and TEFs

Congeners	MLs (pg/L)	TEFs
2,3,7,8-TetraCDD	10	1
1,2,3,7,8-PentaCDD	50	1.0
1,2,3,4,7,8-HexaCDD	50	0.1
1,2,3,6,7,8-HexaCDD	50	0.1
1,2,3,7,8,9-HexaCDD	50	0.1
1,2,3,4,6,7,8-HeptaCDD	50	0.01
OctaCDD	100	0.0001
2,3,7,8-TetraCDF	10	0.1
1,2,3,7,8-PentaCDF	50	0.05
2,3,4,7,8-PentaCDF	50	0.5
1,2,3,4,7,8-HexaCDF	50	0.1
1,2,3,6,7,8-HexaCDF	50	0.1
1,2,3,7,8,9-HexaCDF	50	0.1
2,3,4,6,7,8-HexaCDF	50	0.1
1,2,3,4,6,7,8-HeptaCDFs	50	0.01

REVISED TENTATIVE

Congeners	MLs (pg/L)	TEFs
1,2,3,4,7,8,9-HeptaCDFs	50	0.01
OctaCDF	100	0.0001

P. Mass Emission Rate

The mass emission rate shall be obtained from the following calculation for any calendar day:

Mass emission rate (lb/day) = $\frac{8.34}{N}\sum_{i=1}^{N} Q_i C_i$

Mass emission rate (kg/day) = $\frac{3.79}{N}\sum_{i=1}^{N} Q_i C_i$

in which 'N' is the number of samples analyzed in any calendar day. 'Qi' and 'Ci' are the flow rate (mgd) and the constituent concentration (mg/L), respectively, which are associated with each of the 'N' grab samples, which may be taken in any calendar day. If a composite sample is taken, 'Ci' is the concentration measured in the composite sample and 'Qi' is the average flow rate occurring during the period over which samples are composited.

The daily concentration of all constituents shall be determined from the flow-weighted average of the same constituents in the combined waste streams as follows:

Daily concentration = $\frac{1}{Q_t}\sum_{i=1}^{N} Q_i C_i$

in which 'N' is the number of component waste streams. 'Qi' and 'Ci' are the flow rate (MGD) and the constituent concentration (mg/L), respectively, which are associated with each of the 'N' waste streams. 'Qt' is the total flow rate of the combined waste streams.

Q. Bacterial Standards and Analysis

1. The geometric mean used for determining compliance with bacterial standards is calculated with the following equation:

   Geometric Mean = (C1 x C2 x … x C3)1/n

   where n is the number of days samples were collected during the period and C is the concentration of bacteria (MPN/100 mL or CFU/100 mL) found on each day of sampling.

2. For bacterial analyses, sample dilutions should be performed so the expected range of values is bracketed (for example, with multiple tube fermentation method or membrane filtration method, 2 to 16,000 per 100 ml for total and fecal coliform, at a minimum, and 1 to 1000 per 100 ml for enterococcus). The detection methods used for each analysis shall be reported with the results of the analyses.

3. Detection methods used for coliforms (total and fecal) shall be those presented in Table 1A of 40 CFR part 136, unless alternate methods have been approved by USEPA pursuant to 40 CFR part 136, or improved methods have been determined by the Executive Officer and/or USEPA.

4. Detection methods used for *E. coli* shall be those presented in Table 1A of 40 CFR part 136 or in the USEPA publication EPA 600/4-85/076, Test Methods for Escherichia coli

REVISED TENTATIVE

and Enterococci in Water By Membrane Filter Procedure or any improved method determined by the Executive Officer and/or USEPA to be appropriate.

R. Single Operational Upset (SOU)

A SOU that leads to simultaneous violations of more than one pollutant parameter shall be treated as a single violation and limits the Permittee's liability in accordance with the following conditions:

1. A SOU is broadly defined as a single unusual event that temporarily disrupts the usually satisfactory operation of a system in such a way that it results in violation of multiple pollutant parameters.
2. A Permittee may assert SOU to limit liability only for those violations which the Permittee submitted notice of the upset as required in Provision V.E.2(b) of Attachment D – Standard Provisions.
3. For purpose outside of CWC section 13385 subdivisions (h) and (i), determination of compliance and civil liability (including any more specific definition of SOU, the requirements for Permittees to assert the SOU limitation of liability, and the manner of counting violations) shall be in accordance with USEPA Memorandum "Issuance of Guidance Interpreting Single Operational Upset" (September 27, 1989).
4. For purpose of CWC section 13385 (h) and (i), determination of compliance and civil liability (including any more specific definition of SOU, the requirements for Permittees to assert the SOU limitation of liability, and the manner of counting violations) shall be in accordance with CWC section 13385 (f)(2).

REVISED TENTATIVE

ATTACHMENT A – DEFINITIONS

Arithmetic Mean (μ)
Also called the average, is the sum of measured values divided by the number of samples. For ambient water concentrations, the arithmetic mean is calculated as follows:

Arithmetic mean = $\mu = \Sigma x / n$ where: Σx is the sum of the measured ambient water concentrations, and n is the number of samples.

Average Monthly Effluent Limitation (AMEL)
The highest allowable average of daily discharges over a calendar month, calculated as the sum of all daily discharges measured during a calendar month divided by the number of daily discharges measured during that month.

Average Weekly Effluent Limitation (AWEL)
The highest allowable average of daily discharges over a calendar week (Sunday through Saturday), calculated as the sum of all daily discharges measured during a calendar week divided by the number of daily discharges measured during that week.

Bioaccumulative
Those substances taken up by an organism from its surrounding medium through gill membranes, epithelial tissue, or from food and subsequently concentrated and retained in the body of the organism.

Biosolids
Sewage sludge that has been treated and tested and shown to be capable of being beneficially and legally used pursuant to federal and state regulations as a soil amendment for agricultural, silvicultural, horticultural, and land reclamation activities as specified under 40 C.F.R. Part 503.

Carcinogenic
Pollutants are substances that are known to cause cancer in living organisms.

Coefficient of Variation (CV)
CV is a measure of the data variability and is calculated as the estimated standard deviation divided by the arithmetic mean of the observed values.

Daily Discharge
Daily Discharge is defined as either: (1) the total mass of the constituent discharged over the calendar day (12:00 am through 11:59 pm) or any 24-hour period that reasonably represents a calendar day for purposes of sampling (as specified in the permit), for a constituent with limitations expressed in units of mass or; (2) the unweighted arithmetic mean measurement of the constituent over the day for a constituent with limitations expressed in other units of measurement (e.g., concentration).

The daily discharge may be determined by the analytical results of a composite sample taken over the course of one day (a calendar day or other 24-hour period defined as a day) or by the arithmetic mean of analytical results from one or more grab samples taken over the course of the day.

For composite sampling, if 1 day is defined as a 24-hour period other than a calendar day, the analytical result for the 24-hour period will be considered as the result for the calendar day in which the 24-hour period ends.

Detected, but Not Quantified (DNQ)
DNQ are those sample results less than the RL, but greater than or equal to the laboratory's MDL. Sample results reported as DNQ are estimated concentrations.

REVISED TENTATIVE

Dilution Credit
Dilution Credit is the amount of dilution granted to a discharge in the calculation of a water quality-based effluent limitation, based on the allowance of a specified mixing zone. It is calculated from the dilution ratio or determined through conducting a mixing zone study or modeling of the discharge and receiving water.

Effluent Concentration Allowance (ECA)
ECA is a value derived from the water quality criterion/objective, dilution credit, and ambient background concentration that is used, in conjunction with the coefficient of variation for the effluent monitoring data, to calculate a long-term average (LTA) discharge concentration. The ECA has the same meaning as waste load allocation (WLA) as used in U.S. EPA guidance (Technical Support Document For Water Quality-based Toxics Control, March 1991, second printing, EPA/505/2-90-001).

Enclosed Bays
Enclosed Bays means indentations along the coast that enclose an area of oceanic water within distinct headlands or harbor works. Enclosed bays include all bays where the narrowest distance between the headlands or outermost harbor works is less than 75 percent of the greatest dimension of the enclosed portion of the bay. Enclosed bays include, but are not limited to, Humboldt Bay, Bodega Harbor, Tomales Bay, Drake's Estero, San Francisco Bay, Morro Bay, Los Angeles-Long Beach Harbor, Upper and Lower Newport Bay, Mission Bay, and San Diego Bay. Enclosed bays do not include inland surface waters or ocean waters.

Estimated Chemical Concentration
The estimated chemical concentration that results from the confirmed detection of the substance by the analytical method below the ML value.

Estuaries
Estuaries means waters, including coastal lagoons, located at the mouths of streams that serve as areas of mixing for fresh and ocean waters. Coastal lagoons and mouths of streams that are temporarily separated from the ocean by sandbars shall be considered estuaries. Estuarine waters shall be considered to extend from a bay or the open ocean to a point upstream where there is no significant mixing of fresh water and seawater. Estuarine waters included, but are not limited to, the Sacramento-San Joaquin Delta, as defined in Water Code section 12220, Suisun Bay, Carquinez Strait downstream to the Carquinez Bridge, and appropriate areas of the Smith, Mad, Eel, Noyo, Russian, Klamath, San Diego, and Otay rivers. Estuaries do not include inland surface waters or ocean waters.

Inland Surface Waters
All surface waters of the state that do not include the ocean, enclosed bays, or estuaries.

Instantaneous Maximum Effluent Limitation
The highest allowable value for any single grab sample or aliquot (i.e., each grab sample or aliquot is independently compared to the instantaneous maximum limitation).

Instantaneous Minimum Effluent Limitation
The lowest allowable value for any single grab sample or aliquot (i.e., each grab sample or aliquot is independently compared to the instantaneous minimum limitation).

Maximum Daily Effluent Limitation (MDEL)
The highest allowable daily discharge of a pollutant, over a calendar day (or 24-hour period). For pollutants with limitations expressed in units of mass, the daily discharge is calculated as the total mass of the pollutant discharged over the day. For pollutants with limitations expressed in other units of

REVISED TENTATIVE

measurement, the daily discharge is calculated as the arithmetic mean measurement of the pollutant over the day.

Median
The middle measurement in a set of data. The median of a set of data is found by first arranging the measurements in order of magnitude (either increasing or decreasing order). If the number of measurements (n) is odd, then the median = $X_{(n+1)/2}$. If n is even, then the median = $(X_{n/2} + X_{(n/2)+1})/2$ (i.e., the midpoint between the n/2 and n/2+1).

Method Detection Limit (MDL)
MDL is the minimum concentration of a substance that can be measured and reported with 99 percent confidence that the analyte concentration is greater than zero, as defined in in 40 C.F.R. part 136, Attachment B, revised as of July 3, 1999.

Minimum Level (ML)
ML is the concentration at which the entire analytical system must give a recognizable signal and acceptable calibration point. The ML is the concentration in a sample that is equivalent to the concentration of the lowest calibration standard analyzed by a specific analytical procedure, assuming that all the method specified sample weights, volumes, and processing steps have been followed.

Mixing Zone
Mixing Zone is a limited volume of receiving water that is allocated for mixing with a wastewater discharge where water quality criteria can be exceeded without causing adverse effects to the overall water body.

Not Detected (ND)
Sample results which are less than the laboratory's MDL.

Persistent Pollutants
Persistent pollutants are substances for which degradation or decomposition in the environment is nonexistent or very slow.

Pollutant Minimization Program (PMP)
PMP means waste minimization and pollution prevention actions that include, but are not limited to, product substitution, waste stream recycling, alternative waste management methods, and education of the public and businesses. The goal of the PMP shall be to reduce all potential sources of a priority pollutant(s) through pollutant minimization (control) strategies, including pollution prevention measures as appropriate, to maintain the effluent concentration at or below the water quality-based effluent limitation. Pollution prevention measures may be particularly appropriate for persistent bioaccumulative priority pollutants where there is evidence that beneficial uses are being impacted. The Regional Water Board may consider cost effectiveness when establishing the requirements of a PMP. The completion and implementation of a Pollution Prevention Plan, if required pursuant to Water Code section 13263.3(d), shall be considered to fulfill the PMP requirements.

Pollution Prevention
Pollution Prevention means any action that causes a net reduction in the use or generation of a hazardous substance or other pollutant that is discharged into water and includes, but is not limited to, input change, operational improvement, production process change, and product reformulation (as defined in Water Code section 13263.3). Pollution prevention does not include actions that merely shift a pollutant in wastewater from one environmental medium to another environmental medium, unless clear environmental benefits of such an approach are identified to the satisfaction of the State Water Resources Control Board (State Water Board) or Regional Water Board.

REVISED TENTATIVE

Reporting Level (RL)
The RL is the ML (and its associated analytical method) chosen by the Permittee for reporting and compliance determination from the MLs included in this Order, including an additional factor if applicable as discussed herein. The MLs included in this Order correspond to approved analytical methods for reporting a sample result that are selected by the Regional Water Board either from Appendix 4 of the SIP in accordance with section 2.4.2 of the SIP or established in accordance with section 2.4.3 of the SIP. The ML is based on the proper application of method-based analytical procedures for sample preparation and the absence of any matrix interferences. Other factors may be applied to the ML depending on the specific sample preparation steps employed. For example, the treatment typically applied in cases where there are matrix-effects is to dilute the sample or sample aliquot by a factor of ten. In such cases, this additional factor must be applied to the ML in the computation of the RL.

Source of Drinking Water
Any water designated as municipal or domestic supply (MUN) in a Regional Water Board Basin Plan.

Standard Deviation (σ)
Standard Deviation is a measure of variability that is calculated as follows:

$$\sigma = (\sum[(x - \mu)^2]/(n - 1))^{0.5}$$

where:
x is the observed value;
μ is the arithmetic mean of the observed values; and
n is the number of samples.

Toxicity Reduction Evaluation (TRE)
TRE is a study conducted in a step-wise process designed to identify the causative agents of effluent or ambient toxicity, isolate the sources of toxicity, evaluate the effectiveness of toxicity control options, and then confirm the reduction in toxicity. The first steps of the TRE consist of the collection of data relevant to the toxicity, including additional toxicity testing, and an evaluation of facility operations and maintenance practices, and best management practices. A Toxicity Identification Evaluation (TIE) may be required as part of the TRE, if appropriate. (A TIE is a set of procedures to identify the specific chemical(s) responsible for toxicity. These procedures are performed in three phases (characterization, identification, and confirmation) using aquatic organism toxicity tests.)

REVISED TENTATIVE

Attachment B-1 – Map of San Jose Creek WRP including Effluent Discharge and Receiving Water Monitoring Locations

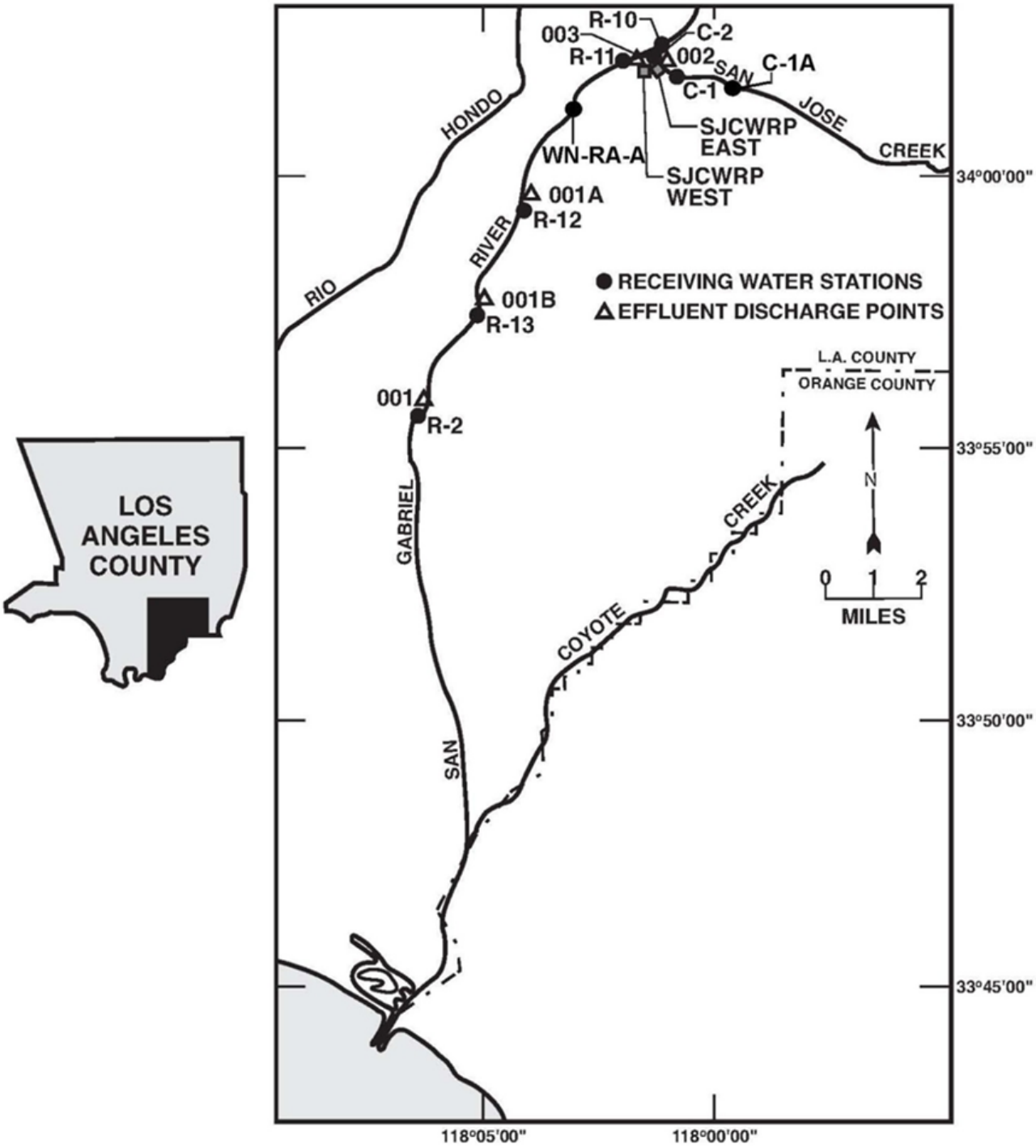

REVISED TENTATIVE

Attachment B-2 – Map of San Jose Creek WRP and surrounding area

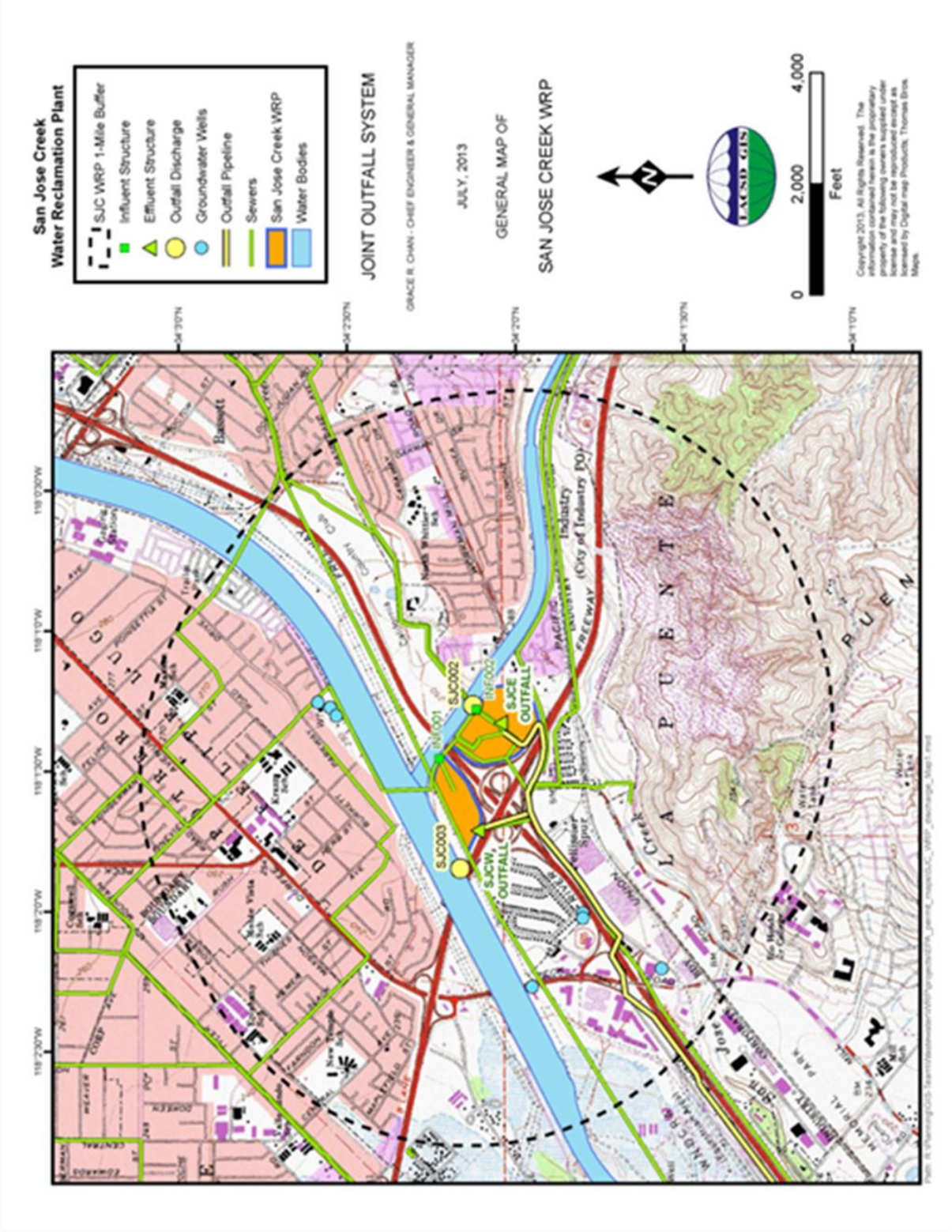

REVISED TENTATIVE

Attachment B-3 – Map of San Jose Creek WRP Outfall Locations

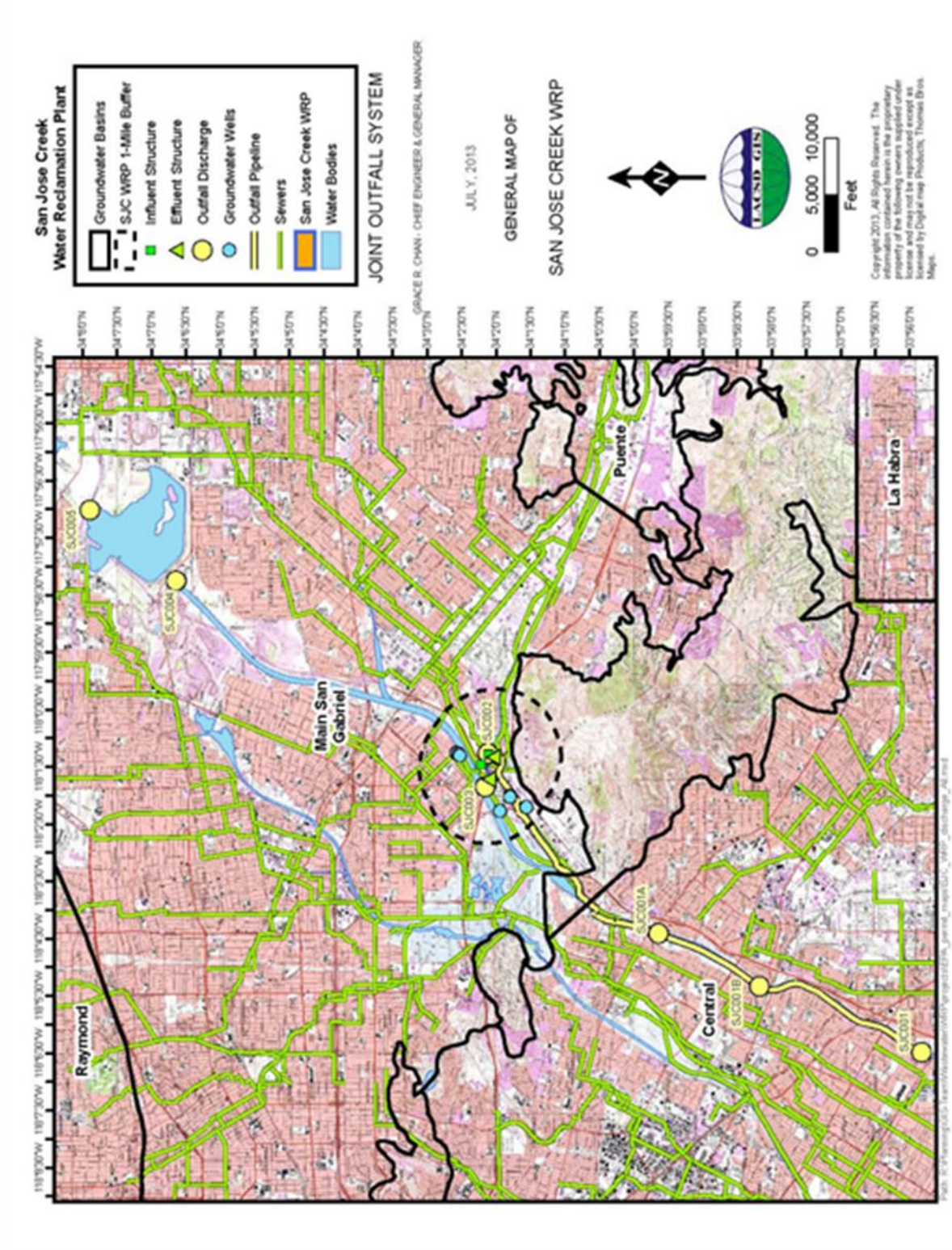

REVISED TENTATIVE

Attachment B-4 **–** Map of San Jose Creek WRP showing depth to groundwater near San Jose Creek

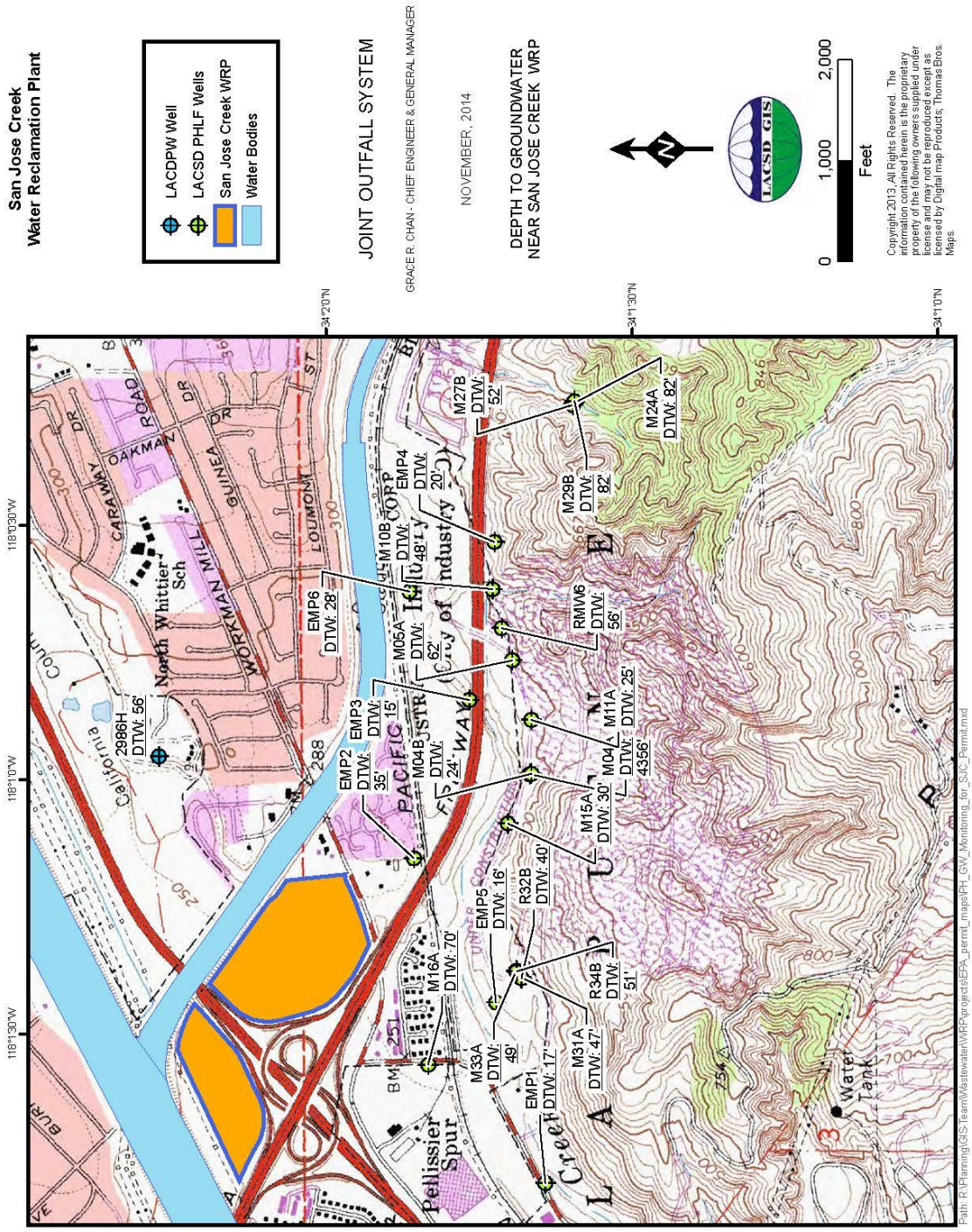

REVISED TENTATIVE

Attachment B-5 – Map of Indirect Reuse and Replenishment Project (IRRP)

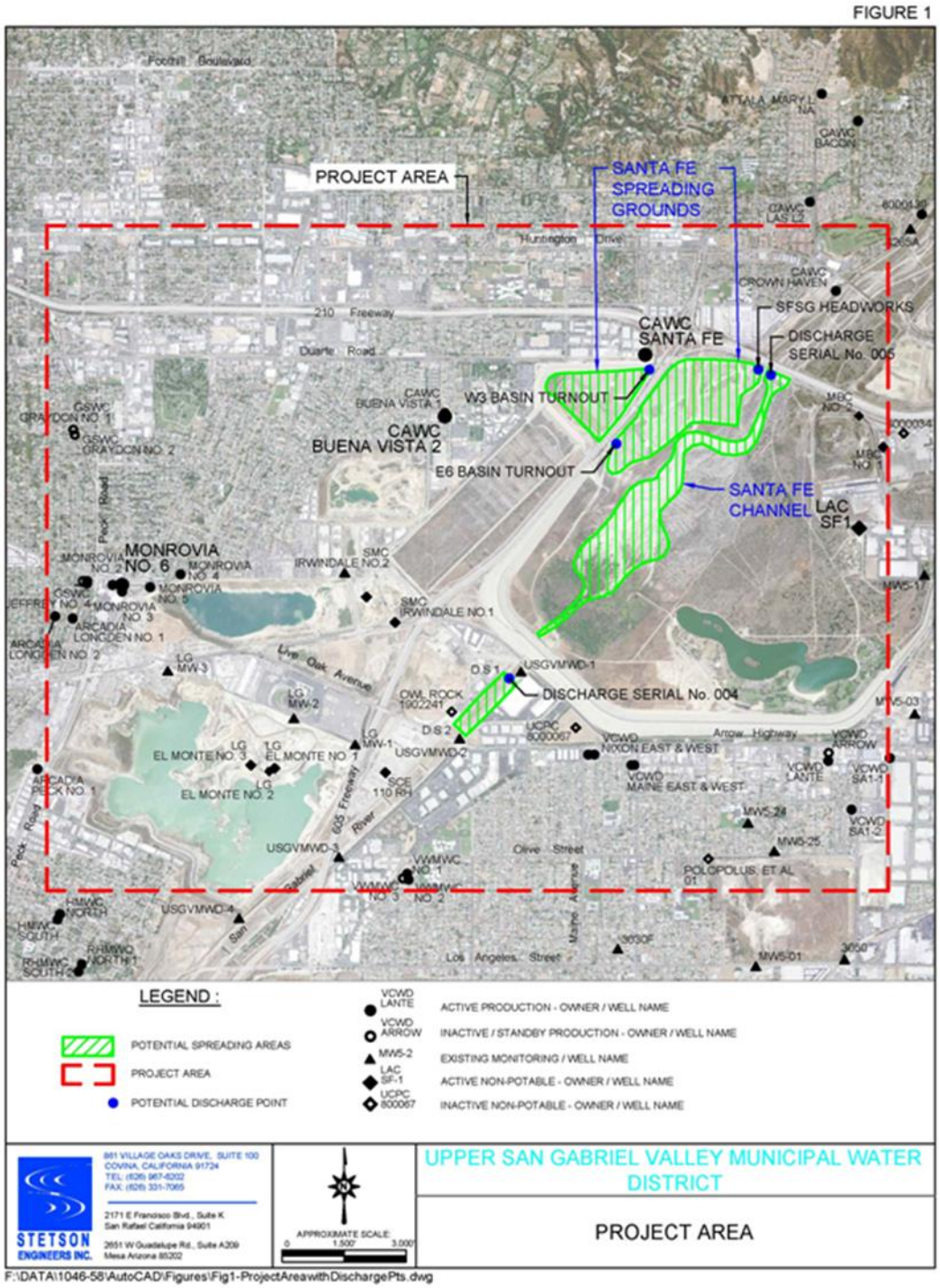

REVISED TENTATIVE

Attachment B-6 – Detail Map of Indirect Reuse and Replenishment Project (IRRP)

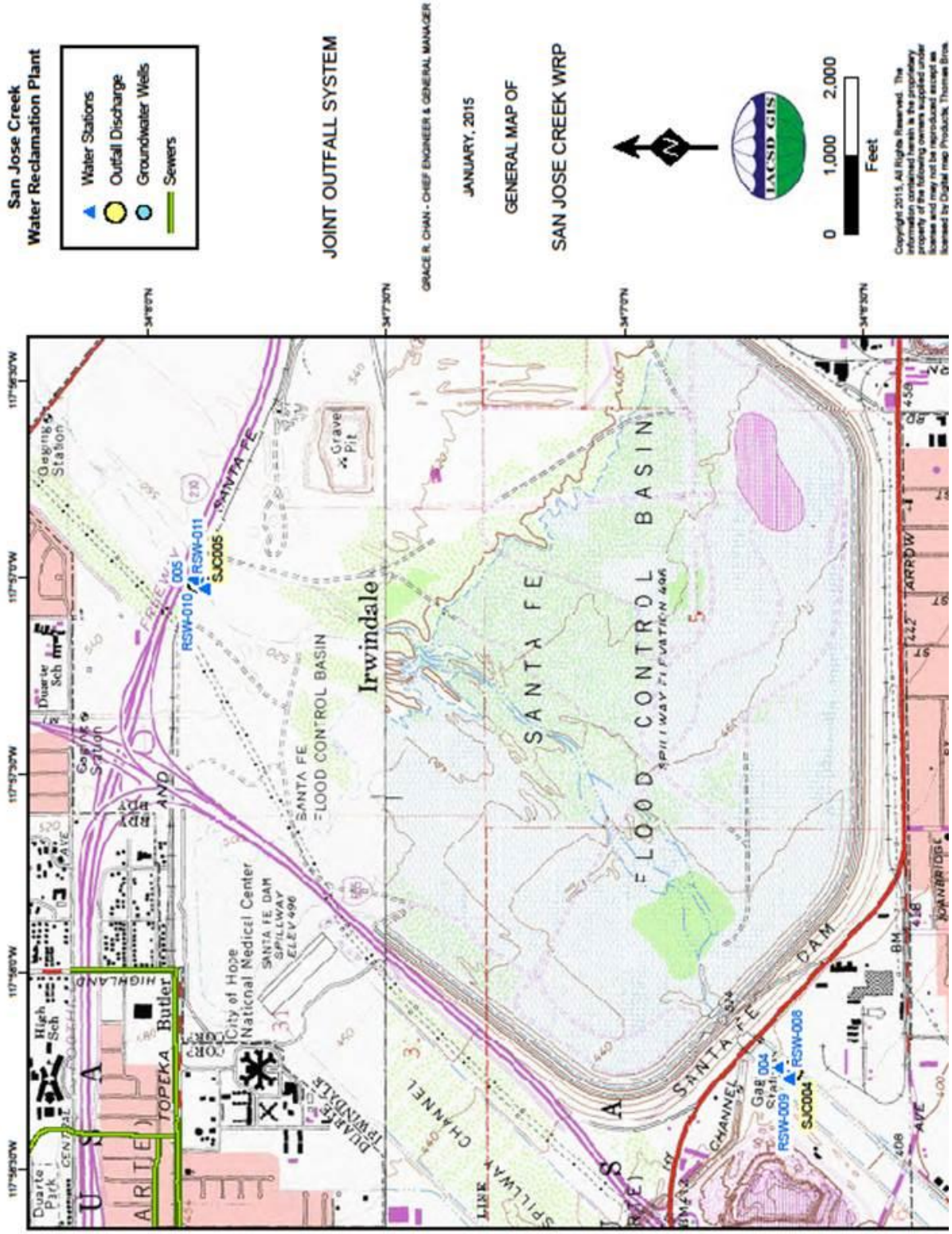

REVISED TENTATIVE

Attachment C-1 – San Jose Creek West Process Schematic

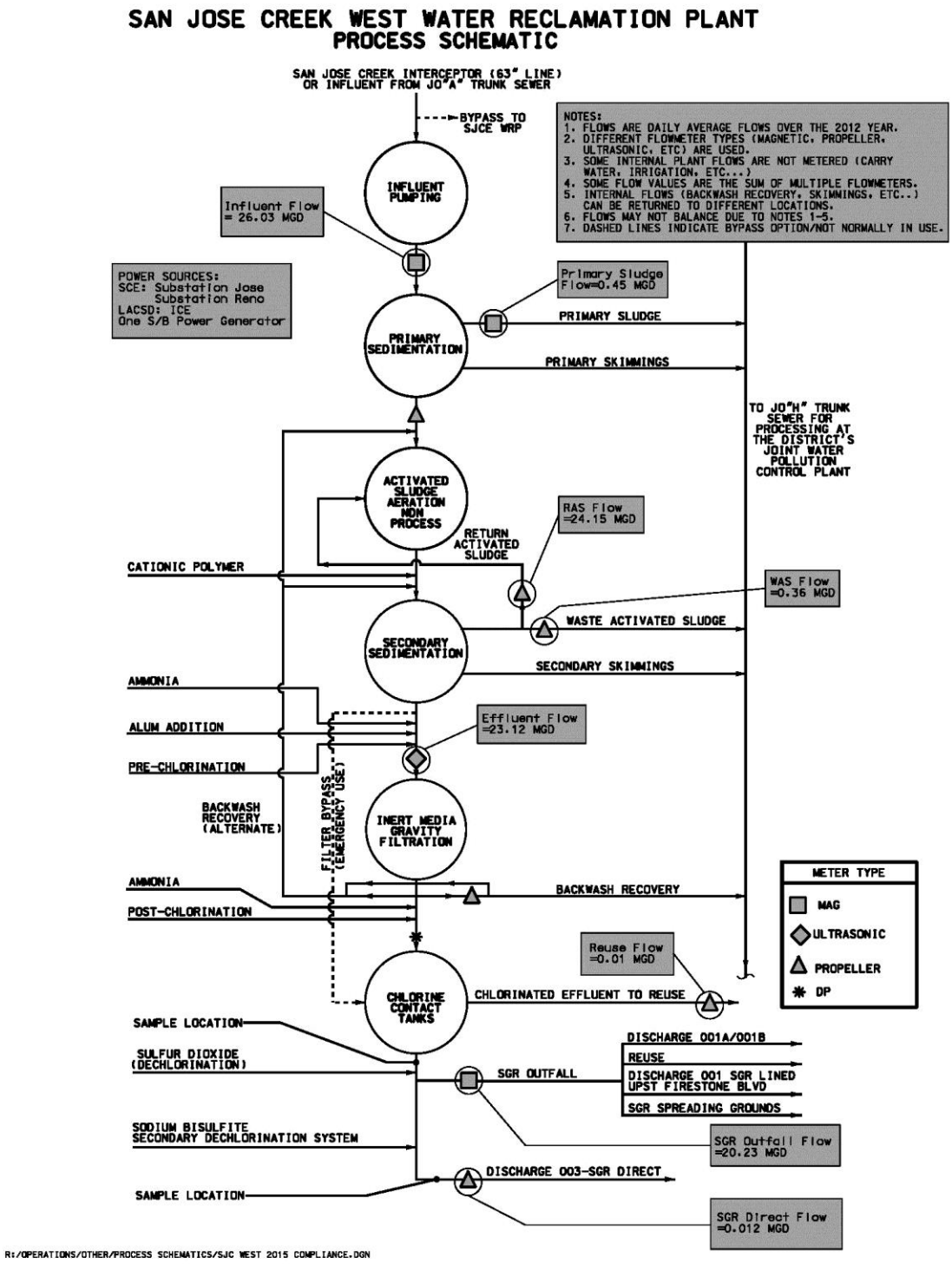

REVISED TENTATIVE

Attachment C-2 – San Jose Creek East Process Schematic

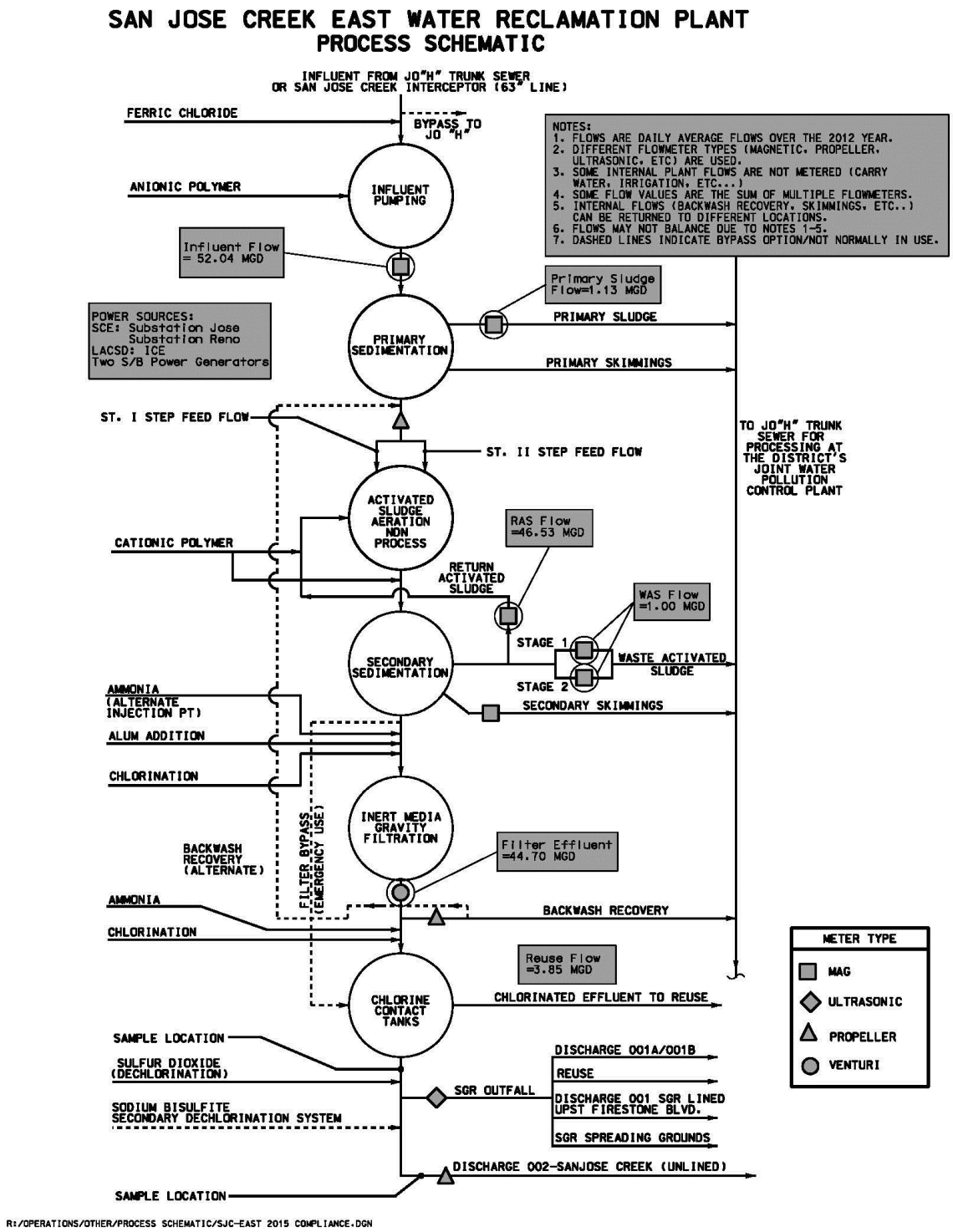

REVISED TENTATIVE

ATTACHMENT D – STANDARD PROVISIONS

I. STANDARD PROVISIONS – PERMIT COMPLIANCE

A. Duty to Comply

1. The Permittee must comply with all of the terms, requirements, and conditions of this Order. Any noncompliance constitutes a violation of the Clean Water Act (CWA) and the California Water Code and is grounds for enforcement action; permit termination, revocation and reissuance, or modification; denial of a permit renewal application; or a combination thereof. (40 C.F.R. § 122.41(a); Wat. Code, §§ 13261, 13263, 13265, 13268, 13000, 13001, 13304, 13350, 13385.)

2. The Permittee shall comply with effluent standards or prohibitions established under Section 307(a) of the CWA for toxic pollutants and with standards for sewage sludge use or disposal established under Section 405(d) of the CWA within the time provided in the regulations that establish these standards or prohibitions, even if this Order has not yet been modified to incorporate the requirement. (40 C.F.R. § 122.41(a)(1).)

B. Need to Halt or Reduce Activity Not a Defense

It shall not be a defense for a Permittee in an enforcement action that it would have been necessary to halt or reduce the permitted activity in order to maintain compliance with the conditions of this Order. (40 C.F.R. § 122.41(c).)

C. Duty to Mitigate

The Permittee shall take all reasonable steps to minimize or prevent any discharge or sludge use or disposal in violation of this Order that has a reasonable likelihood of adversely affecting human health or the environment. (40 C.F.R. § 122.41(d).)

D. Proper Operation and Maintenance

The Permittee shall at all times properly operate and maintain all facilities and systems of treatment and control (and related appurtenances) which are installed or used by the Permittee to achieve compliance with the conditions of this Order. Proper operation and maintenance also includes adequate laboratory controls and appropriate quality assurance procedures. This provision requires the operation of backup or auxiliary facilities or similar systems that are installed by a Permittee only when necessary to achieve compliance with the conditions of this Order. (40 C.F.R. § 122.41(e).)

E. Property Rights

1. This Order does not convey any property rights of any sort or any exclusive privileges. (40 C.F.R. § 122.41(g).)

2. The issuance of this Order does not authorize any injury to persons or property or invasion of other private rights, or any infringement of state or local law or regulations. (40 C.F.R. § 122.5(c).)

F. Inspection and Entry

The Permittee shall allow the Regional Water Board, State Water Board, U.S. EPA, and/or their authorized representatives (including an authorized contractor acting as their representative), upon the presentation of credentials and other documents, as may be

REVISED TENTATIVE

required by law, to (33 U.S.C. § 1318(a)(4)(B); 40 C.F.R. § 122.41(i); Wat. Code, §§ 13267, 13383):

1. Enter upon the Permittee's premises where a regulated facility or activity is located or conducted, or where records are kept under the conditions of this Order (33 U.S.C. § 1318(a)(4)(B)(i); 40 C.F.R. § 122.41(i)(1); Wat. Code, §§ 13267, 13383);
2. Have access to and copy, at reasonable times, any records that must be kept under the conditions of this Order (33 U.S.C. § 1318(a)(4)(B)(ii); 40 C.F.R. § 122.41(i)(2); Wat. Code, §§ 13267, 13383);
3. Inspect and photograph, at reasonable times, any facilities, equipment (including monitoring and control equipment), practices, or operations regulated or required under this Order (33 U.S.C. § 1318(a)(4)(B)(ii); 40 C.F.R. § 122.41(i)(3); Wat. Code, §§ 13267, 13383); and
4. Sample or monitor, at reasonable times, for the purposes of assuring Order compliance or as otherwise authorized by the CWA or the Water Code, any substances or parameters at any location. (33 U.S.C. § 1318(a)(4)(B); 40 C.F.R. § 122.41(i)(4); Wat. Code, §§ 13267, 13383.)

G. Bypass

1. **Definitions**
   a. "Bypass" means the intentional diversion of waste streams from any portion of a treatment facility. (40 C.F.R. § 122.41(m)(1)(i).)
   b. "Severe property damage" means substantial physical damage to property, damage to the treatment facilities, which causes them to become inoperable, or substantial and permanent loss of natural resources that can reasonably be expected to occur in the absence of a bypass. Severe property damage does not mean economic loss caused by delays in production. (40 C.F.R. § 122.41(m)(1)(ii).)
2. **Bypass not exceeding limitations.** The Permittee may allow any bypass to occur which does not cause exceedances of effluent limitations, but only if it is for essential maintenance to assure efficient operation. These bypasses are not subject to the provisions listed in Standard Provisions – Permit Compliance I.G.3, I.G.4, and I.G.5 below. (40 C.F.R. § 122.41(m)(2).)
3. **Prohibition of bypass**. Bypass is prohibited, and the Regional Water Board may take enforcement action against a Permittee for bypass, unless (40 C.F.R. § 122.41(m)(4)(i)):
   a. Bypass was unavoidable to prevent loss of life, personal injury, or severe property damage (40 C.F.R. § 122.41(m)(4)(i)(A));
   b. There were no feasible alternatives to the bypass, such as the use of auxiliary treatment facilities, retention of untreated wastes, or maintenance during normal periods of equipment downtime. This condition is not satisfied if adequate back-up equipment should have been installed in the exercise of reasonable engineering judgment to prevent a bypass that occurred during normal periods of equipment downtime or preventive maintenance (40 C.F.R. § 122.41(m)(4)(i)(B)); and
   c. The Permittee submitted notice to the Regional Water Board as required under Standard Provisions – Permit Compliance I.G.5 below. (40 C.F.R. § 122.41(m)(4)(i)(C).)

REVISED TENTATIVE

4. The Regional Water Board may approve an anticipated bypass, after considering its adverse effects, if the Regional Water Board determines that it will meet the three conditions listed in Standard Provisions – Permit Compliance I.G.3 above. (40 C.F.R. § 122.41(m)(4)(ii).)

5. **Notice**

   a. Anticipated bypass. If the Permittee knows in advance of the need for a bypass, it shall submit a notice, if possible at least 10 days before the date of the bypass. (40 C.F.R. § 122.41(m)(3)(i).)

   b. Unanticipated bypass. The Permittee shall submit notice of an unanticipated bypass as required in Standard Provisions - Reporting V.E below (24-hour notice). (40 C.F.R. § 122.41(m)(3)(ii).)

H. Upset

Upset means an exceptional incident in which there is unintentional and temporary noncompliance with technology based permit effluent limitations because of factors beyond the reasonable control of the Permittee. An upset does not include noncompliance to the extent caused by operational error, improperly designed treatment facilities, inadequate treatment facilities, lack of preventive maintenance, or careless or improper operation. (40 C.F.R. § 122.41(n)(1).)

1. **Effect of an upset.** An upset constitutes an affirmative defense to an action brought for noncompliance with such technology based permit effluent limitations if the requirements of Standard Provisions – Permit Compliance I.H.2 below are met. No determination made during administrative review of claims that noncompliance was caused by upset, and before an action for noncompliance, is final administrative action subject to judicial review. (40 C.F.R. § 122.41(n)(2).)

2. **Conditions necessary for a demonstration of upset.** A Permittee who wishes to establish the affirmative defense of upset shall demonstrate, through properly signed, contemporaneous operating logs or other relevant evidence that (40 C.F.R. § 122.41(n)(3)):

   a. An upset occurred and that the Permittee can identify the cause(s) of the upset (40 C.F.R. § 122.41(n)(3)(i));

   b. The permitted facility was, at the time, being properly operated (40 C.F.R. § 122.41(n)(3)(ii));

   c. The Permittee submitted notice of the upset as required in Standard Provisions – Reporting V.E.2.b below (24-hour notice) (40 C.F.R. § 122.41(n)(3)(iii)); and

   d. The Permittee complied with any remedial measures required under Standard Provisions – Permit Compliance I.C above. (40 C.F.R. § 122.41(n)(3)(iv).)

3. **Burden of proof**. In any enforcement proceeding, the Permittee seeking to establish the occurrence of an upset has the burden of proof. (40 C.F.R. § 122.41(n)(4).)

REVISED TENTATIVE

II. STANDARD PROVISIONS – PERMIT ACTION

A. General

This Order may be modified, revoked and reissued, or terminated for cause. The filing of a request by the Permittee for modification, revocation and reissuance, or termination, or a notification of planned changes or anticipated noncompliance does not stay any Order condition. (40 C.F.R. § 122.41(f).)

B. Duty to Reapply

If the Permittee wishes to continue an activity regulated by this Order after the expiration date of this Order, the Permittee must apply for and obtain a new permit. (40 C.F.R. § 122.41(b).)

C. Transfers

This Order is not transferable to any person except after notice to the Regional Water Board. The Regional Water Board may require modification or revocation and reissuance of the Order to change the name of the Permittee and incorporate such other requirements as may be necessary under the CWA and the Water Code. (40 C.F.R. §§ 122.41(l)(3), 122.61.)

III. STANDARD PROVISIONS – MONITORING

A. Samples and measurements taken for the purpose of monitoring shall be representative of the monitored activity. (40 C.F.R. § 122.41(j)(1).)

B. Monitoring results must be conducted according to test procedures approved under 40 C.F.R. part 136 for the analyses of pollutants unless another method is required under 40 C.F.R. subchapters N or O. In the case of pollutants for which there are no approved methods under 40 C.F.R. part 136 or otherwise required under 40 C.F.R. subchapters N or O, monitoring must be conducted according to a test procedure specified in this Order for such pollutants. (40 C.F.R. §§ 122.41(j)(4), 122.44(i)(1)(iv).)

IV. STANDARD PROVISIONS – RECORDS

A. Except for records of monitoring information required by this Order related to the Permittee's sewage sludge use and disposal activities, which shall be retained for a period of at least five years (or longer as required by 40 C.F.R. part 503), the Permittee shall retain records of all monitoring information, including all calibration and maintenance records and all original strip chart recordings for continuous monitoring instrumentation, copies of all reports required by this Order, and records of all data used to complete the application for this Order, for a period of at least three (3) years from the date of the sample, measurement, report or application. This period may be extended by request of the Regional Water Board Executive Officer at any time. (40 C.F.R. § 122.41(j)(2).)

B. Records of monitoring information shall include:

1. The date, exact place, and time of sampling or measurements (40 C.F.R. § 122.41(j)(3)(i));
2. The individual(s) who performed the sampling or measurements (40 C.F.R. § 122.41(j)(3)(ii));
3. The date(s) analyses were performed (40 C.F.R. § 122.41(j)(3)(iii));
4. The individual(s) who performed the analyses (40 C.F.R. § 122.41(j)(3)(iv));
5. The analytical techniques or methods used (40 C.F.R. § 122.41(j)(3)(v)); and
6. The results of such analyses. (40 C.F.R. § 122.41(j)(3)(vi).)

REVISED TENTATIVE

C. Claims of confidentiality for the following information will be denied (40 C.F.R. § 122.7(b)):

1. The name and address of any permit applicant or Permittee (40 C.F.R. § 122.7(b)(1)); and
2. Permit applications and attachments, permits and effluent data. (40 C.F.R. § 122.7(b)(2).)

V. STANDARD PROVISIONS – REPORTING

A. Duty to Provide Information

The Permittee shall furnish to the Regional Water Board, State Water Board, or U.S. EPA within a reasonable time, any information which the Regional Water Board, State Water Board, or U.S. EPA may request to determine whether cause exists for modifying, revoking and reissuing, or terminating this Order or to determine compliance with this Order. Upon request, the Permittee shall also furnish to the Regional Water Board, State Water Board, or U.S. EPA copies of records required to be kept by this Order. (40 C.F.R. § 122.41(h); Wat. Code, §§ 13267, 13383.)

B. Signatory and Certification Requirements

1. All applications, reports, or information submitted to the Regional Water Board, State Water Board, and/or U.S. EPA shall be signed and certified in accordance with Standard Provisions – Reporting V.B.2, V.B.3, V.B.4, and V.B.5 below. (40 C.F.R. § 122.41(k).)
2. All permit applications shall be signed by either a principal executive officer or ranking elected official. For purposes of this provision, a principal executive officer of a federal agency includes: (i) the chief executive officer of the agency, or (ii) a senior executive officer having responsibility for the overall operations of a principal geographic unit of the agency (e.g., Regional Administrators of U.S. EPA). (40 C.F.R. § 122.22(a)(3).).
3. All reports required by this Order and other information requested by the Regional Water Board, State Water Board, or U.S. EPA shall be signed by a person described in Standard Provisions – Reporting V.B.2 above, or by a duly authorized representative of that person. A person is a duly authorized representative only if:
   a. The authorization is made in writing by a person described in Standard Provisions – Reporting V.B.2 above (40 C.F.R. § 122.22(b)(1));
   b. The authorization specifies either an individual or a position having responsibility for the overall operation of the regulated facility or activity such as the position of plant manager, operator of a well or a well field, superintendent, position of equivalent responsibility, or an individual or position having overall responsibility for environmental matters for the company. (A duly authorized representative may thus be either a named individual or any individual occupying a named position.) (40 C.F.R. § 122.22(b)(2)); and
   c. The written authorization is submitted to the Regional Water Board and State Water Board. (40 C.F.R. § 122.22(b)(3).)
4. If an authorization under Standard Provisions – Reporting V.B.3 above is no longer accurate because a different individual or position has responsibility for the overall operation of the facility, a new authorization satisfying the requirements of Standard Provisions – Reporting V.B.3 above must be submitted to the Regional Water Board and State Water Board prior to or together with any reports, information, or applications, to be signed by an authorized representative. (40 C.F.R. § 122.22(c).)

REVISED TENTATIVE

5. Any person signing a document under Standard Provisions – Reporting V.B.2 or V.B.3 above shall make the following certification:

   "I certify under penalty of law that this document and all attachments were prepared under my direction or supervision in accordance with a system designed to assure that qualified personnel properly gather and evaluate the information submitted. Based on my inquiry of the person or persons who manage the system or those persons directly responsible for gathering the information, the information submitted is, to the best of my knowledge and belief, true, accurate, and complete. I am aware that there are significant penalties for submitting false information, including the possibility of fine and imprisonment for knowing violations." (40 C.F.R. § 122.22(d).)

C. Monitoring Reports

1. Monitoring results shall be reported at the intervals specified in the Monitoring and Reporting Program (Attachment E) in this Order. (40 C.F.R. § 122.41(l)(4).)
2. Monitoring results must be reported on a Discharge Monitoring Report (DMR) form or forms provided or specified by the Regional Water Board or State Water Board for reporting results of monitoring of sludge use or disposal practices. (40 C.F.R. § 122.41(l)(4)(i).)
3. If the Permittee monitors any pollutant more frequently than required by this Order using test procedures approved under 40 C.F.R. part 136, or another method required for an industry-specific waste stream under 40 C.F.R. subchapters N or O, the results of such monitoring shall be included in the calculation and reporting of the data submitted in the DMR or sludge reporting form specified by the Regional Water Board. (40 C.F.R. § 122.41(l)(4)(ii).)
4. Calculations for all limitations, which require averaging of measurements, shall utilize an arithmetic mean unless otherwise specified in this Order. (40 C.F.R. § 122.41(l)(4)(iii).)

D. Compliance Schedules

Reports of compliance or noncompliance with, or any progress reports on, interim and final requirements contained in any compliance schedule of this Order, shall be submitted no later than 14 days following each schedule date. (40 C.F.R. § 122.41(l)(5).)

E. Twenty-Four Hour Reporting

1. The Permittee shall report any noncompliance that may endanger health or the environment. Any information shall be provided orally within 24 hours from the time the Permittee becomes aware of the circumstances. A written submission shall also be provided within five (5) days of the time the Permittee becomes aware of the circumstances. The written submission shall contain a description of the noncompliance and its cause; the period of noncompliance, including exact dates and times, and if the noncompliance has not been corrected, the anticipated time it is expected to continue; and steps taken or planned to reduce, eliminate, and prevent reoccurrence of the noncompliance. (40 C.F.R. § 122.41(l)(6)(i).)
2. The following shall be included as information that must be reported within 24 hours under this paragraph (40 C.F.R. § 122.41(l)(6)(ii)):
   a. Any unanticipated bypass that exceeds any effluent limitation in this Order. (40 C.F.R. § 122.41(l)(6)(ii)(A).)

REVISED TENTATIVE

b. Any upset that exceeds any effluent limitation in this Order. (40 C.F.R. § 122.41(l)(6)(ii)(B).)

3. The Regional Water Board may waive the above-required written report under this provision on a case-by-case basis if an oral report has been received within 24 hours. (40 C.F.R. § 122.41(l)(6)(iii).)

F. Planned Changes

The Permittee shall give notice to the Regional Water Board as soon as possible of any planned physical alterations or additions to the permitted facility. Notice is required under this provision only when (40 C.F.R. § 122.41(l)(1)):

1. The alteration or addition to a permitted facility may meet one of the criteria for determining whether a facility is a new source in section 122.29(b) (40 C.F.R. § 122.41(l)(1)(i)); or

2. The alteration or addition could significantly change the nature or increase the quantity of pollutants discharged. This notification applies to pollutants that are not subject to effluent limitations in this Order. (40 C.F.R. § 122.41(l)(1)(ii).)

3. The alteration or addition results in a significant change in the Permittee's sludge use or disposal practices, and such alteration, addition, or change may justify the application of permit conditions that are different from or absent in the existing permit, including notification of additional use or disposal sites not reported during the permit application process or not reported pursuant to an approved land application plan. (40 C.F.R.§ 122.41(l)(1)(iii).)

G. Anticipated Noncompliance

The Permittee shall give advance notice to the Regional Water Board or State Water Board of any planned changes in the permitted facility or activity that may result in noncompliance with this Order's requirements. (40 C.F.R. § 122.41(l)(2).)

H. Other Noncompliance

The Permittee shall report all instances of noncompliance not reported under Standard Provisions – Reporting V.C, V.D, and V.E above at the time monitoring reports are submitted. The reports shall contain the information listed in Standard Provision – Reporting V.E above. (40 C.F.R. § 122.41(l)(7).)

I. Other Information

When the Permittee becomes aware that it failed to submit any relevant facts in a permit application, or submitted incorrect information in a permit application or in any report to the Regional Water Board**,** State Water Board, or U.S. EPA, the Permittee shall promptly submit such facts or information. (40 C.F.R. § 122.41(l)(8).)

VI. STANDARD PROVISIONS – ENFORCEMENT

A. The Regional Water Board is authorized to enforce the terms of this permit under several provisions of the Water Code, including, but not limited to, sections 13268, 13385, 13386, and 13387.

B. The CWA provides that any person who violates section 301, 302, 306, 307, 308, 318 or 405 of the CWA, or any permit condition or limitation implementing any such sections in a permit issued under section 402, or any requirement imposed in a pretreatment program approved under sections 402(a)(3) or 402(b)(8) of the CWA, is subject to a civil penalty not to exceed

REVISED TENTATIVE

$25,000 per day for each violation. The CWA provides that any person who negligently violates sections 301, 302, 306, 307, 308, 318, or 405 of the CWA, or any condition or limitation implementing any of such sections in a permit issued under section 402 of the CWA, or any requirement imposed in a pretreatment program approved under section 402(a)(3) or 402(b)(8) of the CWA, is subject to criminal penalties of $2,500 to $25,000 per day of violation, or imprisonment of not more than one year, or both. In the case of a second or subsequent conviction for a negligent violation, a person shall be subject to criminal penalties of not more than $50,000 per day of violation, or by imprisonment of not more than two years, or both. Any person who *knowingly* violates such conditions or limitations is subject to criminal penalties of $5,000 to $50,000 per day of violation, or imprisonment for not more than three years, or both. In the case of a second or subsequent conviction for a knowing violation, a person shall be subject to criminal penalties of not more than $100,000 per day of violation, or imprisonment of not more than 6 years, or both. Any person who knowingly violates section 301, 302, 303, 306, 307, 308, 318 or 405 of the CWA, or any permit condition or limitation implementing any of such sections in a permit issued under section 402 of the CWA, and who knows at that time that he thereby places another person in imminent danger of death or serious bodily injury, shall, upon conviction, be subject to a fine of not more than $250,000 or imprisonment of not more than 15 years, or both. In the case of a second or subsequent conviction for a knowing endangerment violation, a person shall be subject to a fine of not more than $500,000 or by imprisonment of not more than 30 years, or both. An organization, as defined in section 309(c)(3)(B)(iii) of the CWA, shall, upon conviction of violating the imminent danger provision, be subject to a fine of not more than $1,000,000 and can be fined up to $2,000,000 for second or subsequent convictions (40 CFR § 122.41(a)(2); CWC section 13385 and 13387)

C. Any person may be assessed an administrative penalty by the Administrator of USEPA, the Regional Water Board, or State Water Board for violating section 301, 302, 306, 307, 308, 318 or 405 of this CWA, or any permit condition or limitation implementing any of such sections in a permit issued under section 402 of the CWA. Administrative penalties for Class I violations are not to exceed $10,000 per violation, with the maximum amount of any Class I penalty assessed not to exceed $25,000. Penalties for Class II violations are not to exceed $10,000 per day for each day during which the violation continues, with the maximum amount of any Class II penalty not to exceed $125,000. (40 CFR § 122.41(a)(3))

D. The CWA provides that any person who falsifies, tampers with, or knowingly renders inaccurate any monitoring device or method required to be maintained under this permit shall, upon conviction, be punished by a fine of not more than $10,000, or by imprisonment for not more than two years, or both. If a conviction of a person is for a violation committed after a first conviction of such person under this paragraph, punishment is a fine of not more than $20,000 per day of violation, or by imprisonment of not more than four years, or both. (40 CFR § 122.41(j)(5)).

The CWA provides that any person who knowingly makes any false statement, representation, or certification in any record or other document submitted or required to be maintained under this permit, including monitoring reports or reports of compliance or non-compliance shall, upon conviction, be punished by a fine of not more than $10,000 per violation, or by imprisonment for not more than six months per violation, or by both. (40 CFR § 122.41(k)(2)).

REVISED TENTATIVE

VII. ADDITIONAL PROVISIONS – NOTIFICATION LEVELS

A. Publicly-Owned Treatment Works (POTWs)

All POTWs shall provide adequate notice to the Regional Water Board of the following (40 C.F.R. § 122.42(b)):

1. Any new introduction of pollutants into the POTW from an indirect discharge that would be subject to sections 301 or 306 of the CWA if it were directly discharging those pollutants (40 C.F.R. § 122.42(b)(1)); and
2. Any substantial change in the volume or character of pollutants being introduced into that POTW by a source introducing pollutants into the POTW at the time of adoption of the Order. (40 C.F.R. § 122.42(b)(2).)
3. Adequate notice shall include information on the quality and quantity of effluent introduced into the POTW as well as any anticipated impact of the change on the quantity or quality of effluent to be discharged from the POTW. (40 C.F.R. § 122.42(b)(3).)

REVISED TENTATIVE

ATTACHMENT E – MONITORING AND REPORTING PROGRAM

REVISED TENTATIVE

CONTENTS

I. General Monitoring Provisions E-3
II. Monitoring Locations E-5
III. Influent Monitoring Requirements E-9
  A. Monitoring Location INF-001 ..... E-9
  B. Monitoring Location INF-002 ..... E-10
IV. Effluent Monitoring Requirements E-11
  A. Monitoring Location EFF-001, EFF-001A and EFF-001B E-11
  B. Monitoring Location EFF-002 ..... E-15
  C. Monitoring Location EFF-003 ..... E-19
  D. Monitoring Locations EFF-004 and EFF-005 ..... E-23
  E. Total Residual Chlorine Additional Monitoring E-27
V. Whole Effluent Toxicity Testing Requirements E-27
  A. Chronic Toxicity E-28
  B. Ammonia Removal E-33
  C. Chlorine Removal E-33
VI. Land discharge MONITORING requirements– Not Applicable E-33
VII. Recycling monitoring requirements -- Not Applicable E-33
VIII. Receiving Water Monitoring Requirements E-33
  A. Monitoring Locations RSW-001 (C-1), RSW-002 (C-2), RSW-003 (R-10), RSW-004 (R-11), RSW-005 (R-2), RSW-006 (R-12), RSW-007 (R-13), RSW-008, RSW-009, RSW-010, and RSW-011. ..... E-34
  B. TMDL Stream Flow and Rainfall Monitoring E-37
IX. Other Monitoring Requirements E-37
  A. Watershed Monitoring E-37
  B. Tertiary Filter Treatment Bypasses E-38
X. Reporting Requirements E-39
  A. General Monitoring and Reporting Requirements E-39
  B. Self-Monitoring Reports (SMRs) E-39
  C. Discharge Monitoring Reports (DMRs) E-41
  D. Other Reports E-41

TABLES

Table E-1. Monitoring Station Locations E-5
Table E-2. Influent Monitoring INF-001 ..... E-9
Table E-3. Influent Monitoring INF-002 ..... E-10
Table E-4. Effluent Monitoring EFF-001, EFF-001A and EFF-001B E-11
Table E-5. Effluent Monitoring at EFF-002 ..... E-15
Table E-6. Effluent Monitoring EFF-003 ..... E-19
Table E-7. Effluent Monitoring EFF-004 and/or EFF-005 ..... E-24
Table E-8. USEPA Test Methods and Test Acceptability Criteria E-30

Table E-9. Receiving Water Monitoring Requirements at RSW-001 (C-1), RSW-002 (C-2), RSW-003 (R-10), RSW-004 (R-11), RSW-005 (R-2), RSW-006 (R-12), RSW-007 (R-13), RSW-008, RSW-009, RSW-010, and RSW-011. ..... E-34
Table E-10. TMDL Stream Flow and Rainfall Monitoring Requirements E-37
Table E-11. Monitoring Periods and Reporting Schedule E-40

REVISED TENTATIVE

ATTACHMENT E – MONITORING AND REPORTING PROGRAM (MRP), CI-5542

Section 308 of the federal Clean Water Act (CWA) and sections 122.41(h), (j)-(*l*), 122.44(i), and 122.48 of title 40 of the Code of Federal Regulations (40 C.F.R.) require that all NPDES permits specify monitoring and reporting requirements. Water Code sections 13267 and 13383 also authorize the Regional Water Board to establish monitoring, inspection, entry, reporting, and recordkeeping requirements. This MRP establishes monitoring, reporting, and recordkeeping requirements that implement the federal and California laws and/or regulations.

REVISED TENTATIVE

I. GENERAL MONITORING PROVISIONS

A. All samples shall be representative of the waste discharge under conditions of peak load. Quarterly effluent analyses shall be performed during the months of February, May, August, and November. Semiannual analyses shall be performed during the months of February and August. Annual analyses shall be performed during the month of August, except for bioassessment monitoring, which will be conducted in the spring/summer. Should there be instances when monitoring could not be done during these specified months, the Permittee must notify the Regional Water Board, state the reason why monitoring could not be conducted, and obtain approval from the Executive Officer for an alternate schedule. Results of quarterly, semiannual, and annual analyses shall be reported as due date specified in Table E-10 of MRP.

B. Pollutants shall be analyzed using the analytical methods described in 40 CFR § 136.3, 136.4, and 136.5; or where no methods are specified for a given pollutant, by methods approved by this Regional Water Board or the State Water Board. Laboratories analyzing effluent samples and receiving water samples shall be certified by the Environmental Laboratory Accreditation Program (ELAP)[1] or approved by the Executive Officer and must include quality assurance/quality control (QA/QC) data in their reports. A copy of the laboratory certification shall be provided in the Annual Report due to the Regional Water Board each time a new certification and/or renewal of the certification is obtained from ELAP.

C. Water/wastewater samples must be analyzed within allowable holding time limits as specified in 40 CFR § 136.3. All QA/QC analyses must be run on the same dates that samples are actually analyzed. The Permittee shall retain the QA/QC documentation in its files and make available for inspection and/or submit them when requested by the Regional Water Board. Proper chain of custody procedures must be followed and a copy of that documentation shall be submitted with the monthly report.

D. The Permittee shall calibrate and perform maintenance procedures on all monitoring instruments and to ensure accuracy of measurements, or shall ensure that both equipment activities will be conducted.

E. For any analyses performed for which no procedure is specified in the United States Environmental Protection Agency (USEPA) guidelines, or in the MRP, the constituent or parameter analyzed and the method or procedure used must be specified in the monitoring report.

[1] On July 1, 2014, the Drinking Water Program's ELAP was transferred from the California Department of Public Health (CDPH) to the State Water Board's new Division of Drinking Water.

F. Each monitoring report must affirm in writing that "all analyses were conducted at a laboratory certified for such analyses under the ELAP or approved by the Executive Officer and in accordance with current USEPA guideline procedures or as specified in this Monitoring and Reporting Program."

G. The monitoring report shall specify the USEPA analytical method used, the Method Detection Limit (MDL), and the Reporting Level (RL) [the applicable minimum level (ML) or reported Minimum Level (RML)] for each pollutant. The MLs are those published by the State Water Resources Control Board (State Water Board) in the Policy for the Implementation of Toxics Standards for Inland Surface Waters, Enclosed Bays, and Estuaries of California, (State Implementation Policy or SIP), February 9, 2005, Appendix 4. The ML represents the lowest quantifiable concentration in a sample based on the proper application of all method-based analytical procedures and the absence of any matrix interference. When all specific analytical steps are followed and after appropriate application of method specific factors, the ML also represents the lowest standard in the calibration curve for that specific analytical technique. When there is deviation from the method analytical procedures, such as dilution or concentration of samples, other factors may be applied to the ML depending on the sample preparation. The resulting value is the reported ML.

H. The Permittee shall select the analytical method that provides a ML lower than the permit limit established for a given parameter, unless the Permittee can demonstrate that a particular ML is not attainable, in accordance with procedures set forth in 40 CFR part 136, and obtains approval for a higher ML from the Executive Officer, as provided for in section J, below. If the effluent limitation is lower than all the MLs in Appendix 4, SIP, the Permittee must select the method with the lowest ML for compliance purposes. The Permittee shall include in the Annual Summary Report a list of the analytical methods employed for each test.

I. The Permittee shall instruct its laboratories to establish calibration standards so that the ML (or its equivalent if there is differential treatment of samples relative to calibration standards) is the lowest calibration standard. At no time is the Permittee to use analytical data derived from extrapolation beyond the lowest point of the calibration curve. In accordance with section J, below, the Permittee's laboratory may employ a calibration standard lower than the ML in Appendix 4 of the SIP.

J. In accordance with section 2.4.3 of the SIP, the Regional Water Board Executive Officer, in consultation with the State Water Board's Quality Assurance Program Manager, may establish an ML that is not contained in Appendix 4 of the SIP to be included in the Permittee's permit in any of the following situations:

1. When the pollutant under consideration is not included in Appendix 4, SIP;
2. When the Permittee and the Regional Water Board agree to include in the permit a test method that is more sensitive than those specified in 40 CFR part 136;
3. When the Permittee agrees to use an ML that is lower than those listed in Appendix 4;
4. When the Permittee demonstrates that the calibration standard matrix is sufficiently different from that used to establish the ML in Appendix 4 and proposes an appropriate ML for the matrix; or,
5. When the Permittee uses a method, which quantification practices are not consistent with the definition of the ML. Examples of such methods are USEPA-approved method 1613 for dioxins, and furans, method 1624 for volatile organic substances, and method 1625 for semi-volatile organic substances. In such cases, the Permittee, the Regional Water Board,

REVISED TENTATIVE

and the State Water Board shall agree on a lowest quantifiable limit and that limit will substitute for the ML for reporting and compliance determination purposes.

If there is any conflict between foregoing provisions and the SIP, the provisions stated in the SIP (section 2.4) shall prevail

K. If the Permittee samples and performs analyses (other than for process/operational control, startup, research, or equipment testing) on any influent, effluent, or receiving water constituent more frequently than required by this MRP using approved analytical methods, the results of those analyses shall be included in the report. These results shall be reflected in the calculation of the average used in demonstrating compliance with limitations set forth in this Order.

L. The Permittee shall develop and maintain a record of all spills or bypasses of raw or partially treated sewage from its collection system or treatment plant according to the requirements in the WDR section of this Order. This record shall be made available to the Regional Water Board upon request and a spill summary shall be included in the annual summary report.

M. For all bacteriological analyses, sample dilutions should be performed so the expected range of values is bracketed (for example, with multiple tube fermentation method or membrane filtration method, 2 to 16,000 per 100 ml for total and fecal coliform, at a minimum, and 1 to 1000 per 100 ml for enterococcus). The detection methods used for each analysis shall be reported with the results of the analyses.

1. Detection methods used for coliforms (total and fecal) shall be those presented in Table 1A of 40 CFR part 136, unless alternate methods have been approved in advance by the USEPA pursuant to 40 CFR part 136.
2. Detection methods used for E.coli shall be those presented in Table 1A of 40 CFR part 136 or in the USEPA publication EPA 600/4-85/076, Test Methods for Escherichia coli and Enterococci in Water By Membrane Filter Procedure, or any improved method determined by the Regional Water Board to be appropriate

II. MONITORING LOCATIONS

The Permittee shall establish the following monitoring locations to demonstrate compliance with the effluent limitations, discharge specifications, and other requirements in this Order (Refer to Attachment B-1):

Table E-1. Monitoring Station Locations

Discharge Point Source	Monitoring Location Name	Monitoring Location Description
Influent Monitoring		
San Jose Creek East Influent	INF-001	Sampling stations shall be established at each point of inflow to the sewage treatment plant and shall be located upstream of any in-plant return flows and/or where representative samples of the influent can be obtained.
San Jose Creek West Influent	INF-002	Sampling stations shall be established at each point of inflow to the sewage treatment plant and shall be located upstream of any in-plant return flows and/or where representative samples of the influent can be obtained.

REVISED TENTATIVE

Discharge Point Source	Monitoring Location Name	Monitoring Location Description
Effluent Monitoring		
San Jose Creek West and East Combined	EFF-001, EFF-001A, EFF-001B	The effluent sampling station shall be located downstream of any in-plant return flows and after the final disinfection process, where representative samples of the effluent can be obtained. This location represents the flow-weighted calculations for the combined effluent to Discharge Point Nos. 001, 001A, or 001B. No sampling or continuous recorder monitoring is done at this location. Flow weighting calculation of required parameters is performed using samples taken from EFF-002 and EFF-003. Latitude 33.930524 N and Longitude -118.107743 W
San Jose Creek West and East Combined	EFF-001X	The effluent sampling station for total residual chlorine, pH, and temperature is located at outfall for the Discharge Point No. 001. The total residual chlorine, pH, and temperature limitations shall be applied to the effluent sample collected at this point.
San Jose Creek West and East Combined	EFF-001AX	The effluent sampling station for total residual chlorine, pH, and temperature is located at outfall for the Discharge Point No. 001A. The total residual chlorine, pH, and temperature limitations shall be applied to the effluent sample collected at this point.
San Jose Creek West and East Combined	EFF-001BX	The effluent sampling station for total residual chlorine, pH, and temperature is located at outfall for the Discharge Point No. 001B. The total residual chlorine, pH, and temperature limitations shall be applied to the effluent sample collected at this point.
San Jose Creek East Facility	EFF-002	The effluent sampling station shall be located downstream of any in-plant return flows and after the final disinfection process, where representative samples of the effluent can be obtained from the San Jose Creek East WRP. Latitude 34.035458 N and Longitude -118.021054 W
San Jose Creek East Facility	EFF-002X	The effluent sampling station for total residual chlorine and temperature shall be located downstream of the dechlorination process and inside the San Jose Creek East WRP. The total residual chlorine and temperature limitations shall be applied to the effluent sample collected at this point.
San Jose Creek West Facility	EFF-003	The effluent sampling station shall be located downstream of any in-plant return flows and after the final disinfection process, where representative samples of the effluent can be obtained from the San Jose Creek West WRP. Latitude 34.036076 N and Longitude -118.030765 W

REVISED TENTATIVE

Discharge Point Source	Monitoring Location Name	Monitoring Location Description
San Jose Creek West Facility	EFF-003X	The effluent sampling station for total residual chlorine and temperature shall be located downstream of the dechlorination process and inside the San Jose Creek West WRP. The total residual chlorine and temperature limitations shall be applied to the effluent sample collected at this point.
San Jose Creek West Facility	EFF-004	The effluent sampling station shall be located downstream of any in-plant return flows and after the final disinfection process, where representative samples of the effluent can be obtained from the San Jose Creek West WRP. Latitude 34.111125 N and Longitude -117.971036 W
San Jose Creek West	EFF-004X	The effluent sampling station for total residual chlorine, pH, and temperature is located at outfall for the Discharge Point No. 004. The total residual chlorine, pH, and temperature limitations shall be applied to the effluent sample collected at this point.
San Jose Creek West Facility	EFF-005	The effluent sampling station shall be located downstream of any in-plant return flows and after the final disinfection process, where representative samples of the effluent can be obtained from the San Jose Creek West WRP. Latitude 34.131603 N and Longitude -117.950228 W
San Jose Creek West	EFF-005X	The effluent sampling station for total residual chlorine, pH, and temperature is located at outfall for the Discharge Point No. 005. The total residual chlorine, pH, and temperature limitations shall be applied to the effluent sample collected at this point.
Receiving Water Monitoring Stations		
Upstream		
San Jose Creek	RSW-001	34.033389 N, 118.017639 W, upstream of Discharge Point No. 002 (C1)
San Gabriel River	RSW-003	Latitude 34.0395833 N and Longitude -118.0251944 W, upstream of Discharge Point 003 and upstream of San Jose Creek confluence(R10)
San Gabriel River	RSW-008	Latitude 34.111333 N and Longitude -117.970722 W, 100 ft. upstream of Discharge Point No. 004.
San Gabriel River	RSW-010	Latitude 34.131833 N, and Longitude -117.950056 W, 100 ft. upstream of Discharge Point No. 005.
Downstream		
San Jose Creek	RSW-002	Latitude 34.035694 N and Longitude -118.021306 W, no further than 100 feet downstream of Discharge Point No. 002. This location is also used for San Jose Creek ammonia receiving water point of compliance. (C2)

REVISED TENTATIVE

Discharge Point Source	Monitoring Location Name	Monitoring Location Description
San Gabriel River	RSW-004	Latitude 34.036083 N and Longitude -118.031500 W, no further than 100 feet downstream of Discharge Point No. 003. This location is also used for San Gabriel River ammonia receiving water point of compliance. (R11)
San Gabriel River	RSW-005	Latitude 33.9295278 N and Longitude -118.1078056 W, no further than 100 feet downstream of Discharge Point No. 001. This location is also used for San Gabriel River ammonia receiving water point of compliance. (R2)
San Gabriel River	RSW-006	Latitude 33.993862 N and Longitude -118.073457 W, no further than 100 feet downstream of Discharge Point No. 001A. This location is also used for San Gabriel River ammonia receiving water point of compliance. (R12)
San Gabriel River	RSW-007	Latitude 33.969472 N and Longitude -118.088778 W, no further than 100 feet downstream of Discharge Point No. 001B. This location is also used for San Gabriel River ammonia receiving water point of compliance(R13)
San Gabriel River	RSW-009	Latitude 34.110972 N and Longitude -117.971194 W, no further than 100 ft. downstream of Discharge Point No. 004. This location is also used for San Gabriel River ammonia receiving water point of compliance.
San Gabriel River	RSW-011	Latitude 34.131417 N and Longitude -117.950476 W, 100 ft. downstream of Discharge Point No. 005. This location is also used for San Gabriel River ammonia receiving water point of compliance.
TMDL, Dry and Wet Weather Flow Monitoring Station		
San Gabriel River	RSW-004D	San Gabriel River, above the Whittier Narrows Dam, at USGS Gauging Station #11087020 (Latitude 34.034167 N, Longitude -118.037222) located in San Gabriel River Reach 3 above Whittier Narrows Dam. This gauging station is operated and maintained by the USGS (Previously RSW-008).
Bioassessment Monitoring Stations		
Upstream of Discharge 002	RSW-001-A	Latitude 34.032306 N and Longitude -118.008278 W, San Jose Creek Reach 1, upstream of Discharge Point No.002 and RSW-001 in the unlined portion of the channel (C1-A).
Downstream of Discharge 003	RSW-004-A	Latitude 34.024528 N and Longitude -118.053222 W, San Gabriel River Reach 3, downstream of Discharge Point No.003 (WN-RA-A).
Downstream of Discharge Point No. 001	RSW-005	Latitude 33.930139 N and Longitude -118.107528 W, San Gabriel River at Firestone Blvd., no further than 100 feet downstream of Discharge Point No. 001 (R-2)

The North latitude and West longitude information in Table E-1 are approximate for administrative purposes.

REVISED TENTATIVE

On November 10, 2008, the Permittee submitted an ROWD and, on July 10, 2014,submitted a revision to the ROWD providing additional information regarding a planned indirect potable reuse project that will make use of recycled water from the San Jose Creek WRP, and to request that changes be made to several of the discharge locations in the NPDES permit for the San Jose Creek WRP to accommodate the proposed project (See Attachment B-5 and B-6). EFF-004 would be a new NPDES Discharge Point drop structure, with a receiving water monitoring station, located below the Santa Fe Dam. Immediately downstream, the river has a soft-bottom, which includes concrete-lined sides in the San Gabriel River bed. This design is intended to slow river movement and increase groundwater recharge.

EFF-005 would be a new NPDES Discharge Point, with a receiving water monitoring station, allowing discharge into the San Gabriel River channel above the Santa Fe dam and then into the Santa Fe Spreading Grounds.

III. INFLUENT MONITORING REQUIREMENTS

Influent monitoring is required to determine compliance with NPDES permit conditions, assess treatment plant performance and assess effectiveness of the Pretreatment Program.

A. Monitoring Location INF-001

1. The Permittee shall monitor influent to the San Jose Creek East Facility at INF-001 as follows:

Table E-2. Influent Monitoring INF-001

Parameter	Units	Sample Type	Minimum Sampling Frequency	Required Analytical Test Method
Flow[2]	mgd	Recorder	continuous[2]	[3]
pH	pH unit	Grab	weekly	[3]
Total suspended solids (TSS)	mg/L	24-hour composite	weekly	[3]
Biochemical oxygen demand (BOD_5 20°C)	mg/L	24-hour composite	weekly	[3]
Lead	µg/L	24-hour composite	monthly	[3]
Selenium	µg/L	24-hour composite	monthly	[3]
Chromium VI	µg/L	grab	annually	[3]
PCBs (aroclors)[4]	µg/L	24-hour composite	annually	[3]

[2] Total daily flow, the monthly average flow, and instantaneous peak daily flow (24-hr basis) shall be reported. Actual monitored flow shall be reported (not the maximum flow, i.e., design capacity).

[3] Pollutants shall be analyzed using the analytical methods described in 40 CFR part 136; where no methods are specified for a given pollutant, by methods approved by this Regional Water Board or State Water Board. For any pollutant whose effluent limitation is lower than all the MLs specified in Attachment 4 of the SIP, the analytical method with the lowest ML must be selected.

[4] PCBs as aroclors shall be analyzed using method EPA 608, PCBs as congeners shall be analyzed using method EPA 1668c. PCBs as congeners shall be analyzed for three years and may be discontinued for the remaining life of this Order if none of the PCBs congeners are detected using method EPA 1668c. USEPA recommends that until USEPA proposed method 1668c for PCBs is incorporated into 40 CFR 136, Permittees should use for discharge monitoring reports/State monitoring reports: (1) USEPA method 608 for monitoring data, reported as aroclor results, that will be used for assessing compliance with WQBELs (if applicable) and (2) USEPA proposed method 1668c, with lower detection levels, for monitoring data, reported as 41 congener results, that will be used for informational purposes.

REVISED TENTATIVE

Parameter	Units	Sample Type	Minimum Sampling Frequency	Required Analytical Test Method
PCBs (congeners)[4]	µg/L	24-hour composite	annually	[3]
Remaining EPA priority pollutants[5] excluding asbestos	µg/L	24-hour composite; grab for VOCs and Cyanide	semiannually	[3]

.

B. Monitoring Location INF-002

1. The Permittee shall monitor influent to the San Jose Creek West Facility atINF-002 as follows:

Table E-3. Influent Monitoring INF-002

Parameter	Units	Sample Type	Minimum Sampling Frequency	Required Analytical Test Method
Flow	mgd	Recorder	continuous[2]	[6]
pH	pH unit	Grab	weekly	[7]
Total suspended solids (TSS)	mg/L	24-hour composite	weekly	[7]
Biochemical oxygen demand (BOD_5 20°C)	mg/L	24-hour composite	weekly	[7]
Lead	µg/L	24-hour composite	monthly	[7]
Selenium	µg/L	24-hour composite	monthly	[7]
Chromium VI	µg/L	grab	annually	[7]
PCBs (aroclors)[8]	µg/L	24-hour composite	annually	[7]
PCBs (congeners)[8]	µg/L	24-hour composite	annually	[7]
Remaining EPA priority pollutants[9] excluding asbestos	µg/L	24-hour composite; grab for VOCs and Cyanide	semiannually	[7]

[5] Priority pollutants are those constituents referred to in 40 CFR part 401.15; a list of these pollutants is provided as Appendix A to 40 CFR part 423

[6] Total daily flow, the monthly average flow, and instantaneous peak daily flow (24-hr basis) shall be reported. Actual monitored flow shall be reported (not the maximum flow, i.e., design capacity).

[7] Pollutants shall be analyzed using the analytical methods described in 40 CFR part 136; where no methods are specified for a given pollutant, by methods approved by this Regional Water Board or State Water Board. For any pollutant whose effluent limitation is lower than all the MLs specified in Attachment 4 of the SIP, the analytical method with the lowest ML must be selected.

[8] PCBs as aroclors shall be analyzed using method EPA 608, PCBs as congeners shall be analyzed using method EPA 1668c. PCBs as congeners shall be analyzed for three years and may be discontinued for the remaining life of this Order if none of the PCBs congeners are detected using method EPA 1668c. USEPA recommends that until USEPA proposed method 1668c for PCBs is incorporated into 40 CFR 136, Permittees should use for discharge monitoring reports/State monitoring reports: (1) USEPA method 608 for monitoring data, reported as aroclor results, that will be used for assessing compliance with WQBELs (if applicable) and (2) USEPA proposed method 1668c for monitoring data, reported as 41 congener results, that will be used for informational purposes.

REVISED TENTATIVE

.

IV. EFFLUENT MONITORING REQUIREMENTS

Effluent monitoring is required to: determine compliance with National Pollutant Discharge Elimination System (NPDES) permit conditions and water quality standards; assess plant performance, identify operational problems and improve plant performance; provide information on wastewater characteristics and flows for use in interpreting water quality and biological data and conduct reasonable potential analyses for toxic pollutants.

The same outfall pipeline discharges to the San Gabriel River at Discharge Points Nos. 001,001A and 001B. Although No. 001B has not been used as of December 2014, it is expected to receive discharge after 2015.

A. Monitoring Location EFF-001, EFF-001A and EFF-001B

1. Total residual chlorine, pH, and temperature are monitored at EFF-001X, EFF-001AX, and EFF-001BX and are required only when there is flow. Monitoring for other required parameters for EFF-001, EFF-001A and EFF-001B is based on flow-weighting calculations[10]. Monitoring for other parameters at EFF-001, EFF-001A, and EFF-001B is reportable to CIWQS if there is flow during the reporting month. If more than one analytical test method is listed for a given parameter, the Permittee must select from the listed methods and corresponding Minimum Level:

Table E-4. Effluent Monitoring EFF-001, EFF-001A and EFF-001B

Parameter	Units	Sample Type	Minimum Sampling Frequency	Required Analytical Test Method and (Minimum Level, units), respectively
Total waste flow	mgd	calculated	continuous[11]	[12]

[9] Priority pollutants are those constituents referred to in 40 CFR part 401.15; a list of these pollutants is provided as Appendix A to 40 CFR part 423. PCB as aroclors shall be analyzed using method EPA 608 and PCB as congeners shall be analyzed using method EPA 1668c.

[10] Concentration = [(East Concentration x metered East Flow to outfall pipeline) + (West Concentration x metered West Flow to outfall pipeline]/(East Flow to outfall pipeline+ West Flow to outfall pipeline).
Mass = [(East Concentration x East Flow to EFF-001, 001A or 001B) + (West Concentration x West Flow to EFF-001, 001A or 001B)] x Conversion Factor.

[11] Where continuous monitoring of a constituent is required, the following shall be reported:
Total waste flow – Total daily and monthly average;
Turbidity – maximum daily value, total amount of time each day the turbidity exceeded five turbidity units, flow-proportioned average daily value. A grab sample can be used to determine compliance with the 10 NTU limit. A grab sample can be used to determine compliance with the 10 NTU limit.

[12] Pollutants shall be analyzed using the analytical methods described in 40 CFR 136; where no methods are specified for a given pollutant, by methods approved by this Regional Water Board or State Water Resources Control Board. For any pollutant whose effluent limitation is lower than all the minimum levels (MLs) specified in Attachment 4 of the SIP, the analytical method with the lowest ML must be selected.

REVISED TENTATIVE

Parameter	Units	Sample Type	Minimum Sampling Frequency	Required Analytical Test Method and (Minimum Level, units), respectively
Turbidity[13]	NTU	calculated	continuous [11,14]	[12]
Total residual chlorine	mg/L	grab	daily[15]	[12]
Total coliform[13]	MPN/100mL or CFU/100mL	calculated	daily[16]	[12]
Fecal coliform[17]	MPN/100mL or CFU/100Ml	calculated	weekly	[12]
E. coli[18]	MPN/100mL or CFU/100mL	calculated	weekly	[12]
Temperature[19]	°F	grab	weekly	[12]
pH[19]	pH units	grab	weekly	[12]
Settleable solids	mL/L	calculated	weekly	[12]
Total suspended solids (TSS)	mg/L	calculated	weekly	[12]
BOD_5 20°C	mg/L	calculated	weekly[20]	[12]

[13] Total Coliform and turbidity samples shall be obtained at some point in the treatment process at a time when wastewater flow and characteristics are most demanding on the treatment facilities, filtration, and disinfection procedures

[14] A flow-weighted 24-hour composite sample may be collected for turbidity at San Jose East and West WRPs in place of the recorder to determine the flow-proportioned average daily value. .A grab sample can be used to determine compliance with the 10 NTU limit. A flow-weighted 24-hour composite sample may be collected for turbidity at EFF-001, EFF-001A, and EFF-001B in place of the recorder to determine the flow-proportioned average daily value.

[15] Daily grab samples shall be collected during peak flow at monitoring location EFF-001, EFF-001A, and EFF-001B Monday through Friday only, except for holidays. Analytical results of daily grab samples will be used to determine compliance with total residual chlorine effluent limitation. Total residual chlorine cannot be monitored using a continuous recorder at Discharge Nos. 001, 001A, and 001B and is only monitoring by a grab sample at these outfalls. These outfalls are at a remote location in a streambed several miles downstream of the plant.

[16] Daily samples shall be collected Monday through Friday, except for holidays.

[17] Fecal coliform testing shall be conducted only if total coliform testing is positive. If the total coliform analysis results in no detection, a result of "< the reporting limit" for total coliform will be reported for both fecal coliform and *E. coli.*

[18] *E. coli* testing shall be conducted only if fecal coliform testing is positive. If the fecal coliform analysis results in no detection, a result of less than (<) the reporting limit for fecal coliform will be reported for *E. coli.*

[19] Nitrate nitrogen, nitrite nitrogen, ammonia nitrogen, organic nitrogen, total kjeldahl nitrogen, pH, and temperature sampling shall be conducted on the same day or as close to concurrently as possible.

[20] If the result of the weekly BOD analysis yields a value greater than the average monthly effluent limitation (AMEL), the frequency of analysis shall be increased to daily within one week of knowledge of the test result for at least 30 days and until compliance with the average weekly effluent limitation (AWEL) and AMEL BOD limits is demonstrated; after which the frequency shall revert to weekly.

REVISED TENTATIVE

Parameter	Units	Sample Type	Minimum Sampling Frequency	Required Analytical Test Method and (Minimum Level, units), respectively
Oil and grease	mg/L	calculated	quarterly	[12]
Dissolved oxygen	mg/L	calculated	monthly	[12]
Total Dissolved Solids	mg/L	calculated	monthly	[12]
Sulfate	mg/L	calculated	monthly	[12]
Chloride	mg/L	calculated	monthly	[12]
Boron	mg/L	calculated	monthly	[12]
Ammonia Nitrogen[19]	mg/L	calculated	monthly	[12]
Nitrite nitrogen[19]	mg/L	calculated	monthly	[12]
Nitrate plus nitrite as nitrogen[19]	mg/L	calculated	monthly	[12]
Organic nitrogen[19]	mg/L	calculated	monthly	[12]
Total kjeldahl nitrogen[19]	mg/L	calculated	monthly	[12]
Total nitrogen	mg/L	calculated	monthly	[12]
Total phosphorus	mg/L	calculated	monthly	[12]
Orthophosphate-P	mg/L	calculated	monthly	[12]
Surfactants (MBAS)[21]	mg/L	calculated	quarterly	[12]
Surfactants (CTAS)[21]	mg/L	calculated	quarterly	[12]
Total hardness ($CaCO_3$)	mg/L	calculated	monthly	[12]
Chronic toxicity	Pass or Fail, % Effect (TST)	24-hour composite (report only East and West toxicity data, do not flow-weight)	monthly[22]	[22]
Antimony	µg/L	calculated	semiannually	[12]
Arsenic	µg/L	calculated	semiannually	[12]
Cadmium	µg/L	calculated	semiannually	[12]
Chromium III[23]	µg/L	calculated	semiannually	[12]
Chromium VI	µg/L	calculated	semiannually	[12]
Total Chromium	µg/L	calculated	semiannually	[12]
Copper	µg/L	calculated	quarterly	[12]
Lead	µg/L	calculated	monthly	[12]
Mercury[24]	µg/L	calculated	semiannually	[12]

REVISED TENTATIVE

[21] MBAS is Methylene blue active substances and CTAS is cobalt thiocyanate active substances.

[22] The Permittee shall conduct whole effluent toxicity monitoring as outlined in section V. Please refer to section V.A.7 of this MRP for the accelerated monitoring schedule. The median monthly summary result shall be reported as “Pass” or “Fail.” The maximum daily single result shall be reported as “Pass” or “Fail” and “% Effect.” When there is a discharge more than one day in a calendar month period, up to three independent toxicity tests may be conducted when one toxicity test results in “Fail.”

[23] The results for Chromium III shall be calculated by subtracting the Chromium VI concentration from the Total Chromium concentration.

[24] The mercury effluent samples shall be analyzed using EPA method 1631E, per 40 CFR part 136.

Parameter	Units	Sample Type	Minimum Sampling Frequency	Required Analytical Test Method and (Minimum Level, units), respectively
Nickel	µg/L	calculated	semiannually	[12]
Selenium	µg/L	calculated	monthly	[12]
Silver	µg/L	calculated	semiannually	[12]
Thallium	µg/L	calculated	semiannually	[12]
Zinc	µg/L	calculated	semiannually	[12]
Cyanide	µg/L	calculated	semiannually	[12]
Bis(2-ethylhexyl)phthalate	µg/L	calculated	semiannually	[12]
Total Trihalomethanes[25]	µg/L	calculated	monthly	[12]
PCBs as aroclors[26]	µg/L	calculated	annually	[12]
PCBs as congeners[27]	µg/L	calculated	annually	[12]
Fluoride	mg/L	calculated	semiannually	[12]
Iron	µg/L	calculated	semiannually	[12]
Radioactivity (Including gross alpha, gross beta, combined radium-226 and radium-228, tritium, strontium-90 & uranium)	pCi/L	calculated	semiannually	[28]
2,3,7,8-TCDD[29]	pg/L	calculated	semiannually	[12]

REVISED TENTATIVE

[25] Total Trihalomethanes is the sum of concentrations of the trihalomethane compounds: bromodichloromethane, bromoform, chloroform, and dibromochloromethane.

[26] PCBs as Aroclors is the sum of PCB 1016, PCB 1221, PCB 1232, PCB 1242, PCB 1248, PCB 1254, and PCB 1260 when monitoring using USEPA method 608.

[27] PCBs as congeners means the sum of 41 congeners when monitoring using USEPA proposed method 1668c. PCB-18, 28, 37, 44, 49, 52, 66, 70, 74, 77, 81, 87, 99, 101, 105,110, 114, 118, 119, 123, 126, 128, 138, 149, 151, 153, 156, 157, 158, 167, 168, 169, 170, 177, 180, 183, 187, 189, 194, 201, and 206 shall be individually quantified. PCBs as congeners shall be analyzed using method EPA 1668c for three years and may be discontinued for the remaining life of this Order if none of the PCB congeners are detected using method EPA 1668c. USEPA recommends that until USEPA proposed method 1668c for PCBs is incorporated into 40 CFR 136, Permittees should use for discharge monitoring reports/State monitoring reports.

[28] Analyze these radiochemicals by the following USEPA methods: method 900.0 for gross alpha and gross beta, method 903.0 or 903.1 for radium-226, method 904.0 for radium-228, method 906.0 for tritium, method 905.0 for strontium-90, and method 908.0 for uranium. Analysis for combined radium-226 & 228 shall be conducted only if gross alpha results for the same sample exceed 15 pCi/L or beta greater than 50 pCi/L. If radium-226 & 228 exceeds the stipulated criteria, analyze for tritium, strontium-90 and uranium.

[29] In accordance with the SIP, the Permittee shall conduct effluent monitoring for the seventeen 2,3,7,8-tetrachlorodibenzo-p-dioxin (2,3,7,8-TCDD or dioxin) congeners in the effluent and in the receiving water Station RSW-001 and RSW-003, located upstream of the discharge point no. 002 and 003 ,respectively The Permittee shall use the appropriate Toxicity Equivalence Factor (TEF) to determine Toxic Equivalence (TEQ). Where TEQ equals the product between each of the 17 individual congeners' (i) concentration analytical result (C_i) and their corresponding Toxicity Equivalence Factor (TEF_i), (i.e., $TEQ_i = C_i \times TEF_i$). Compliance with the dioxin limitation shall be determined by the summation of the seventeen individual TEQs, or the following equation:

Parameter	Units	Sample Type	Minimum Sampling Frequency	Required Analytical Test Method and (Minimum Level, units), respectively
Chlorpyrifos[30]	µg/L	calculated	annually	[12]
Diazinon[30]	µg/L	calculated	annually	[12]
Perchlorate[31]	µg/L	calculated	annually	[31]
1,4-Dioxane[31]	µg/L	calculated	annually	[31]
1,2,3-Trichloropropane[31]	µg/L	calculated	annually	[31]
Methyl tert-butyl-ether (MTBE)[31]	µg/L	calculated	annually	[31]
Remaining EPA priority pollutants[32] excluding asbestos	µg/L	calculated	semiannually	[12]

REVISED TENTATIVE

B. Monitoring Location EFF-002

1. The Permittee shall monitor the discharge of tertiary-treated effluent at EFF-002 as follows. Total residual chlorine, pH, and temperature are monitored at EFF-002X and is required only when there is flow through Discharger Point No. 002. Monitoring for all parameters at EFF-002 is reportable to CIWQS if there is flow to Discharge No. 002 during the reporting month. If more than one analytical test method is listed for a given parameter, the Permittee must select from the listed methods and corresponding Minimum Level:

Table E-5. Effluent Monitoring at EFF-002

Parameter	Units	Sample Type	Minimum Sampling Frequency	Required Analytical Test Method and (Minimum Level, units), respectively
Total waste flow	mgd	Recorder	continuous[33]	[34]

$$\text{Dioxin concentraton in effluent} = \sum_{1}^{17}(TEQ_i) = \sum_{1}^{17}(C_i)(TEF_i)$$

[30] Chlorpyrifos and Diazinon may be analyzed using USEPA method 8141A or EPA 525.2. Chlorpyrifos, Diazinon, and chronic effluent toxicity shall be sampled on the same day or as close to concurrently as possible.

[31] Emerging chemicals include 1,4-dioxane (USEPA 8270B test method), perchlorate (USEPA 314 test method, or USEPA method 331 if a detection limit of less than 6 µg/L is achieved), 1,2,3-trichloropropane (USEPA 504.1, 8260B test method, or USEPA 524.2 in SIM mode), and methyl tert-butyl ether (USEPA 8260B test method or USEPA method 624 if a detection level of less than 5 µg/L is achieved, and if the Permittee received ELAP certification to run USEPA method 624).

[32] Priority pollutants are those constituents referred to in 40 CFR § 401.15; a list of these pollutants is provided as Appendix A to 40 CFR Part 423.

[33] Where continuous monitoring of a constituent is required, the following shall be reported:
Total waste flow – Total daily, monthly average, and peak daily flow (24-hour basis);
Turbidity – maximum daily value, total amount of time each day the turbidity exceeded five turbidity units, flow-proportioned average daily value. A grab sample can be used to determine compliance with the 10 NTU limit. A flow-weighted 24-hour composite sample may be collected for turbidity at EFF-002 in place of the recorder to determine the flow-proportioned average daily value.

Parameter	Units	Sample Type	Minimum Sampling Frequency	Required Analytical Test Method and (Minimum Level, units), respectively
Turbidity[35]	NTU	Recorder	continuous [33]	[34]
Total residual chlorine	mg/L	Recorder	continuous[36]	[34]
Total residual chlorine	mg/L	Grab	daily[37]	[34]
Total coliform[35]	MPN/100mL or CFU/100mL	Grab	daily[38]	[34]
Fecal coliform[39]	MPN/100mL or CFU/100mL	Grab	weekly	[34]
E. coli[40]	MPN/100mL or CFU/100mL	Grab	weekly	[34]
Temperature[41]	°F	grab	weekly	[34]
pH[41]	pH units	grab	weekly	[34]
Settleable solids	mL/L	grab	weekly	[34]
Total suspended solids (TSS)	mg/L	24-hour composite	weekly	[34]
BOD_5 20°C	mg/L	24-hour composite	weekly[42]	[34]

[34] Pollutants shall be analyzed using the analytical methods described in 40 CFR Part 136; where no methods are specified for a given pollutant, by methods approved by this Regional Water Board or State Water Resources Control Board. For any pollutant whose effluent limitation is lower than all the minimum levels (MLs) specified in Attachment 4 of the SIP, the analytical method with the lowest ML must be selected.

[35] Coliform and turbidity samples shall be obtained at some point in the treatment process at a time when wastewater flow and characteristics are most demanding on the treatment facilities, filtration, and disinfection procedures

[36] Total residual chlorine shall be recorded continuously. The recorded data shall be maintained by the Permittee for at least five years. The Permittee shall extract the maximum daily peak, minimum daily peak, and average daily from the recorded media and shall be made available upon request of the Regional Water Board. The continuous monitoring data are not intended to be used for compliance determination purposes.

[37] Daily grab samples shall be collected during peak flow at monitoring location EFF-002 Monday through Friday only, except for holidays. Analytical results of daily grab samples will be used to determine compliance with total residual chlorine effluent limitation at EFF-002X. Furthermore, additional monitoring requirements specified in section IV.E.. shall be followed.

[38] Daily samples shall be collected Monday through Friday, except for holidays.

[39] Fecal coliform testing shall be conducted only if total coliform testing is positive. If the total coliform analysis results in no detection, a result of "< the reporting limit" for total coliform will be reported for both fecal coliform and *E. coli.*

[40] E. coli testing shall be conducted only if fecal coliform testing is positive. If the fecal coliform analysis results in no detection, a result of less than (<) the reporting limit for fecal coliform will be reported for E. coli.

[41] Nitrate nitrogen, nitrite nitrogen, ammonia nitrogen, organic nitrogen, total kjeldahl nitrogen, pH, and temperature sampling shall be conducted on the same day or as close to concurrently as possible.

[42] If the result of the weekly BOD analysis yields a value greater than the average monthly effluent limitation (AMEL), the frequency of analysis shall be increased to daily within one week of knowledge of the test result for at least 30 days and until compliance with the average weekly effluent limitation (AWEL) and AMEL BOD limits is demonstrated; after which the frequency shall revert to weekly.

REVISED TENTATIVE

Parameter	Units	Sample Type	Minimum Sampling Frequency	Required Analytical Test Method and (Minimum Level, units), respectively
Oil and grease	mg/L	grab	quarterly	[34]
Dissolved oxygen	mg/L	grab	monthly	[34]
Total Dissolved Solids	mg/L	24-hour composite	monthly	[34]
Sulfate	mg/L	24-hour composite	monthly	[34]
Chloride	mg/L	24-hour composite	monthly	[34]
Boron	mg/L	24-hour composite	monthly	[34]
Ammonia Nitrogen[41]	mg/L	24-hour composite	monthly	[34]
Nitrite nitrogen[41]	mg/L	24-hour composite	monthly	[34]
Nitrate plus nitrite as nitrogen[41]	mg/L	24-hour composite	monthly	[34]
Organic nitrogen[41]	mg/L	24-hour composite	monthly	[34]
Total kjeldahl nitrogen (TKN)[41]	mg/L	24-hour composite	monthly	[34]
Total nitrogen	mg/L	24-hour composite	monthly	[34]
Total phosphorus	mg/L	24-hour composite	monthly	[34]
Orthophosphate-P	mg/L	24-hour composite	monthly	[34]
Surfactants (MBAS)[43]	mg/L	24-hour composite	quarterly	[34]
Surfactants (CTAS)[43]	mg/L	24-hour composite	quarterly	[34]
Total hardness ($CaCO_3$)	mg/L	24-hour composite	monthly	[34]
Chronic toxicity	Pass or Fail, % Effect (TST)	24-hour composite	monthly[44]	[34]
Antimony	µg/L	24-hour composite	semiannually	[34]
Arsenic	µg/L	24-hour composite	semiannually	[34]
Cadmium	µg/L	24-hour composite	semiannually	[34]
Chromium III[45]	µg/L	calculated	semiannually	[34]
Chromium VI	µg/L	grab	semiannually	[34]
Total Chromium	µg/L	grab	semiannually	[34]
Copper	µg/L	24-hour composite	semiannually	[34]
Lead	µg/L	24-hour composite	monthly	[34]
Mercury	µg/L	24-hour composite	semiannually	[34]

REVISED TENTATIVE

[43] MBAS is Methylene blue active substances and CTAS is cobalt thiocyanate active substances.

[44] The Permittee shall conduct Whole Effluent Toxicity monitoring as outlined in section V. Please refer to section V.A.7 of this MRP for the accelerated monitoring schedule. The median monthly summary result shall be reported as “Pass” or “Fail”. The maximum daily single result shall be reported as “Pass or Fail” with a “% Effect”. When there is a discharge more than one day in a calendar month period, up to three independent toxicity tests may be conducted when one toxicity test results in “Fail”.

[45] The results for Chromium III shall be calculated by subtracting the Chromium VI concentration from the Total Chromium concentration.

Parameter	Units	Sample Type	Minimum Sampling Frequency	Required Analytical Test Method and (Minimum Level, units), respectively
Nickel	µg/L	24-hour composite	semiannually	[34]
Selenium	µg/L	24-hour composite	monthly	[34]
Silver	µg/L	24-hour composite	semiannually	[34]
Thallium	µg/L	24-hour composite	semiannually	[34]
Zinc	µg/L	24-hour composite	semiannually	[34]
Cyanide	µg/L	grab	semiannually	[34]
Bis(2-ethylhexyl)phthalate	µg/L	24-hour composite	semiannually	[34]
Total Trihalomethanes[46]	µg/L	grab/calculated sum	monthly	[34]
PCBs as aroclors[47]	µg/L	24-hour composite	annually	[34]
PCBs as congeners[48]	µg/L	24-hour composite	annually	[34]
Toxaphene	µg/L	24-hour composite	semiannually	[34]
Fluoride	mg/L	24-hour composite	semiannually	[34]
Iron	µg/L	24-hour composite	semiannually	[34]
Radioactivity (Including gross alpha, gross beta, combined radium-226 and radium-228, tritium, strontium-90 & uranium)[49]	pCi/L	24-hour composite	semiannually	[49]
2,3,7,8-TCDD[50]	pg/L	24-hour composite	semiannually	[34]

REVISED TENTATIVE

[46] Total Trihalomethanes is the sum of concentrations of the trihalomethane compounds: bromodichloromethane, bromoform, chloroform, and dibromochloromethane.

[47] PCBs as Aroclors is the sum of PCB 1016, PCB 1221, PCB 1232, PCB 1242, PCB 1248, PCB 1254, and PCB 1260 when monitoring using USEPA method 608.

[48] PCBs as Congeners means the sum of 41 congeners when monitoring using USEPA proposed method 1668c. PCB-18, 28, 37, 44, 49, 52, 66, 70, 74, 77, 81, 87, 99, 101, 105,110, 114, 118, 119, 123, 126, 128, 138, 149, 151, 153, 156, 157, 158, 167, 168, 169, 170, 177, 180, 183, 187, 189, 194, 201, and 206 shall be individually quantified. . PCBs as congeners shall be analyzed using method EPA 1668c for three years and may be discontinued for the remaining life of this Order if none of the PCB congeners are detected using method EPA 1668c. USEPA recommends that until USEPA proposed method 1668c for PCBs is incorporated into 40 CFR 136, Permittees should use for discharge monitoring reports/State monitoring reports.

[49] Analyze these radiochemicals by the following USEPA methods: method 900.0 for gross alpha and gross beta, method 903.0 or 903.1 for radium-226, method 904.0 for radium-228, method 906.0 for tritium, method 905.0 for strontium-90, and method 908.0 for uranium. Analysis for combined radium-226 & 228 shall be conducted only if gross alpha results for the same sample exceed 15 pCi/L or beta greater than 50 pCi/L. If radium-226 & 228 exceeds the stipulated criteria, analyze for tritium, strontium-90 and uranium.

[50] In accordance with the SIP, the Permittee shall conduct effluent monitoring for the seventeen 2,3,7,8-tetrachlorodibenzo-p-dioxin (2,3,7,8-TCDD or dioxin) congeners in the effluent and in the receiving water Station RSW-001, located upstream of the discharge point no. 002. The Permittee shall use the appropriate Toxicity Equivalence Factor (TEF) to determine Toxic Equivalence (TEQ). Where TEQ equals the product between each of the 17 individual congeners' (i) concentration analytical result (C_i) and their corresponding Toxicity Equivalence Factor (TEF_i), (i.e., $TEQ_i = C_i \times TEF_i$). Compliance with the dioxin limitation shall be determined by the summation of the seventeen individual TEQs, or the following equation:

Parameter	Units	Sample Type	Minimum Sampling Frequency	Required Analytical Test Method and (Minimum Level, units), respectively
Chlorpyrifos[51]	µg/L	24-hour composite	annually	[34]
Diazinon[51]	µg/L	24-hour composite	annually	[34]
Perchlorate[52]	µg/L	24-hour composite	annually	[52]
1,4-Dioxane[52]	µg/L	24-hour composite	annually	[52]
1,2,3-Trichloropropane[52]	µg/L	24-hour composite	annually	[52]
Methyl tert-butyl-ether (MTBE)[52]	µg/L	24-hour composite	annually	[52]
Remaining EPA priority pollutants[53] excluding asbestos	µg/L	24-hour composite; grab for VOCs	semiannually	[34]

REVISED TENTATIVE

C. Monitoring Location EFF-003

1. The Permittee shall monitor the discharge of tertiary-treated effluent at EFF-003 as follows. Monitoring for total residual chlorine, pH, and temperature are monitored at EFF-003X and are required only when there is flow through Discharge Point No. 003. Monitoring results for all parameters at EFF-003 shall be reported to CIWQS if there is flow to Discharge No. 003 during the reporting month. If more than one analytical test method is listed for a given parameter, the Permittee must select from the listed methods and corresponding Minimum Level, such that compliance with effluent limitations can be determined and/or future RPA may be conducted.

Table E-6. Effluent Monitoring EFF-003

Parameter	Units	Sample Type	Minimum Sampling Frequency	Required Analytical Test Method and (Minimum Level, units), respectively
Total waste flow	mgd	recorder	continuous[54]	[55]

$$\text{Dioxin concentraton in effluent} = \sum_{1}^{17}(TEQ_i) = \sum_{1}^{17}(C_i)(TEF_i)$$

[51] Chlorpyrifos and Diazinon may be analyzed using USEPA method 8141A or EPA 525.2. Chlorpyrifos, Diazinon, and chronic effluent toxicity shall be sampled on the same day or as close to concurrently as possible.

[52] Emerging chemicals include 1,4-dioxane (USEPA 8270B test method), perchlorate (USEPA 314 test method, or USEPA method 331 if a detection limit of less than 6 µg/L is achieved), 1,2,3-trichloropropane (USEPA 504.1, 8260B test method, or USEPA 524.2 in SIM mode), and methyl tert-butyl ether (USEPA 8260B test method or USEPA method 624 if a detection level of less than 5 µg/L is achieved, and if the Permittee received ELAP certification to run USEPA method 624).

[53] Priority pollutants are those constituents referred to in 40 CFR part 401.15; a list of these pollutants is provided as Appendix A to 40 CFR part 423.

[54] Where continuous monitoring of a constituent is required, the following shall be reported:
Total waste flow – Total daily, monthly average, and peak daily flow (24-hour basis);

Parameter	Units	Sample Type	Minimum Sampling Frequency	Required Analytical Test Method and (Minimum Level, units), respectively
Turbidity[56]	NTU	recorder	continuous[54] [57] [58],	[55]
Total residual chlorine	mg/L	grab/recorder	daily[59]	[55]
Total coliform[56]	MPN/100mL or CFU/100mL	grab	daily[60]	[55]
Fecal coliform[61]	MPN/100mL or CFU/100mL	grab	weekly	[55]
E. coli[62]	MPN/100mL or CFU/100mL	grab	weekly	[55]
Temperature[63]	°F	grab	weekly	[55]
pH[63]	pH units	grab	weekly	[55]
Settleable solids	mL/L	grab	weekly	[55]

REVISED TENTATIVE

Turbidity – maximum daily value, total amount of time each day the turbidity exceeded five turbidity units, flow-proportioned average daily value. . A grab sample can be used to determine compliance with the 10 NTU limit. A flow-weighted 24-hour composite sample may be used in place of the recorder to determine the flow-proportioned average daily value.

[55] Pollutants shall be analyzed using the analytical methods described in 40 CFR Part 136; where no methods are specified for a given pollutant, by methods approved by this Regional Water Board or State Water Resources Control Board. For any pollutant whose effluent limitation is lower than all the minimum levels (MLs) specified in Attachment 4 of the SIP, the analytical method with the lowest ML must be selected.

[56] Coliform and turbidity samples shall be obtained at some point in the treatment process at a time when wastewater flow and characteristics are most demanding on the treatment facilities, filtration, and disinfection procedures

[57] Grab samples may be collected for turbidity at monitoring location EFF-003 to determine compliance with the 10 NTU limit.

[58] A flow-weighted 24-hour composite sample may be collected for turbidity at monitoring location EFF-003 in place of the recorder to determine the flow-proportioned average daily value.

[59] Daily grab samples shall be collected during peak flow at monitoring location EFF-003 Monday through Friday only, except for holidays. Analytical results of daily grab samples will be used to determine compliance with total residual chlorine effluent limitation at EFF-003X. Furthermore, additional monitoring requirements specified in section IV.E. shall be followed. Total residual chlorine shall be recorded continuously. The recorded data shall be maintained by the Permittee for at least five years. The Permittee shall extract the maximum daily peak, minimum daily peak, and average daily from the recorded media and shall be made available upon request of the Regional Water Board. The continuous monitoring data are not intended to be used for compliance determination purposes.

[60] Daily samples shall be collected Monday through Friday, except for holidays.

[61] Fecal coliform testing shall be conducted only if total coliform testing is positive. If the total coliform analysis results in no detection, a result of “< the reporting limit” for total coliform will be reported for both fecal coliform and *E. coli.*

[62] E. coli testing shall be conducted only if fecal coliform testing is positive. If the fecal coliform analysis results in no detection, a result of “less than (<) the reporting limit” for fecal coliform will be reported for E. coli.

[63] Nitrate nitrogen, nitrite nitrogen, ammonia nitrogen, organic nitrogen, total kjeldahl nitrogen, pH, and temperature sampling shall be conducted on the same day or as close to concurrently as possible.

Parameter	Units	Sample Type	Minimum Sampling Frequency	Required Analytical Test Method and (Minimum Level, units), respectively
Total suspended solids (TSS)	mg/L	24-hour composite	weekly	[55]
BOD_5 20°C	mg/L	24-hour composite	weekly[64]	[55]
Oil and grease	mg/L	grab	quarterly	[55]
Dissolved oxygen	mg/L	grab	monthly	[55]
Total Dissolved Solids	mg/L	24-hour composite	monthly	[55]
Sulfate	mg/L	24-hour composite	monthly	[55]
Chloride	mg/L	24-hour composite	monthly	[55]
Boron	mg/L	24-hour composite	monthly	[55]
Ammonia Nitrogen[63]	mg/L	24-hour composite	monthly	[55]
Nitrite nitrogen[63]	mg/L	24-hour composite	monthly	[55]
Nitrate plus nitrite as nitrogen[63]	mg/L	24-hour composite	monthly	[55]
Organic nitrogen[63]	mg/L	24-hour composite	monthly	[55]
Total kjeldahl nitrogen (TKN)[63]	mg/L	24-hour composite	monthly	[55]
Total nitrogen	mg/L	24-hour composite	monthly	[55]
Total phosphorus	mg/L	24-hour composite	monthly	[55]
Orthophosphate-P	mg/L	24-hour composite	monthly	[55]
Surfactants (MBAS)[65]	mg/L	24-hour composite	quarterly	[55]
Surfactants (CTAS)[65]	mg/L	24-hour composite	quarterly	[55]
Total hardness ($CaCO_3$)	mg/L	24-hour composite	monthly	[55]
Chronic toxicity	Pass or Fail, % Effect (TST)	24-hour composite	monthly[66]	[66]
Antimony	µg/L	24-hour composite	semiannually	[55]
Arsenic	µg/L	24-hour composite	semiannually	[55]
Cadmium	µg/L	24-hour composite	semiannually	[55]
Chromium III[67]	µg/L	calculated	semiannually	[55]
Chromium VI	µg/L	grab	semiannually	[55]

REVISED TENTATIVE

[64] If the result of the weekly BOD analysis yields a value greater than the AMEL, the frequency of analysis shall be increased to daily within one week of knowledge of the test result for at least 30 days and until compliance with the AWEL and AMEL BOD limits is demonstrated; after which the frequency shall revert to weekly.

[65] MBAS is Methylene blue active substances and CTAS is cobalt thiocyanate active substances.

[66] The Permittee shall conduct whole effluent toxicity monitoring as outlined in section V. Please refer to section V.A.7 of this MRP for the accelerated monitoring schedule. The median monthly summary result shall be reported as “Pass” or “Fail.” The maximum daily single result shall be reported as “Pass” or “Fail” and “% Effect.” When there is a discharge more than one day in a calendar month period, up to three independent toxicity tests may be conducted when one toxicity test results in “Fail

[67] The results for Chromium III shall be calculated by subtracting the Chromium VI concentration from the Total Chromium concentration.

Parameter	Units	Sample Type	Minimum Sampling Frequency	Required Analytical Test Method and (Minimum Level, units), respectively
Total Chromium	µg/L	grab	semiannually	[55]
Copper	µg/L	24-hour composite	semiannually	[55]
Lead	µg/L	24-hour composite	monthly	[55]
Mercury	µg/L	24-hour composite	semiannually	[55]
Nickel	µg/L	24-hour composite	semiannually	[55]
Selenium	µg/L	24-hour composite	monthly	[55]
Silver	µg/L	24-hour composite	semiannually	[55]
Thallium	µg/L	24-hour composite	semiannually	[55]
Zinc	µg/L	24-hour composite	semiannually	[55]
Cyanide	µg/L	Grab	semiannually	[55]
Bis(2-ethylhexyl)phthalate	µg/L	24-hour composite	semiannually	[55]
Total Trihalomethanes[68]		Grab/calculated sum	monthly	[55]
PCBs as aroclors[69]	µg/L	24-hour composite	annually	[55]
PCBs as congeners[70]	µg/L	24-hour composite	annually	[55]
Fluoride	mg/L	24-hour composite	semiannually	[55]
Iron	µg/L	24-hour composite	semiannually	[55]
Radioactivity (Including gross alpha, gross beta, combined radium-226 and radium-228, tritium, strontium-90 & uranium)[71]	pCi/L	24-hour composite	semiannually	[71]
2,3,7,8-TCDD[72]	pg/L	24-hour composite	semiannually	[72]

REVISED TENTATIVE

[68] Total Trihalomethanes is the sum of concentrations of the trihalomethane compounds: bromodichloromethane, bromoform, chloroform, and dibromochloromethane.

[69] PCBs as Aroclors is the sum of PCB 1016, PCB 1221, PCB 1232, PCB 1242, PCB 1248, PCB 1254, and PCB 1260 when monitoring using USEPA method 608.

[70] PCBs as Congeners means the sum of 41 congeners when monitoring using USEPA proposed method 1668c. PCB-18, 28, 37, 44, 49, 52, 66, 70, 74, 77, 81, 87, 99, 101, 105,110, 114, 118, 119, 123, 126, 128, 138, 149, 151, 153, 156, 157, 158, 167, 168, 169, 170, 177, 180, 183, 187, 189, 194, 201, and 206 shall be individually quantified. PCBs as congeners shall be analyzed using method EPA 1668c for three years and may be discontinued for the remaining life of this Order if none of the PCB congeners are detected using method EPA 1668c. USEPA recommends that until USEPA proposed method 1668c for PCBs is incorporated into 40 CFR Part 136, Permittees should use for discharge monitoring reports/State monitoring reports.

[71] Analyze these radiochemicals by the following USEPA methods: method 900.0 for gross alpha and gross beta, method 903.0 or 903.1 for radium-226, method 904.0 for radium-228, method 906.0 for tritium, method 905.0 for strontium-90, and method 908.0 for uranium. Analysis for combined radium-226 & 228 shall be conducted only if gross alpha results for the same sample exceed 15 pCi/L or beta greater than 50 pCi/L. If radium-226 & 228 exceeds the stipulated criteria, analyze for tritium, strontium-90 and uranium.

[72] In accordance with the SIP, the Permittee shall conduct effluent monitoring for the seventeen 2,3,7,8-tetrachlorodibenzo-p-dioxin (2,3,7,8-TCDD or dioxin) congeners in the effluent and in the receiving water Station RSW-003, located upstream of the discharge point no. 003. The Permittee shall use the appropriate Toxicity Equivalence Factor (TEF) to determine Toxic Equivalence (TEQ). Where TEQ equals the product between each of the 17 individual congeners' (i) concentration analytical result (C_i) and their corresponding Toxicity Equivalence Factor (TEF_i), (i.e., TEQ_i

Parameter	Units	Sample Type	Minimum Sampling Frequency	Required Analytical Test Method and (Minimum Level, units), respectively
Chlorpyrifos[73]	µg/L	24-hour composite	annually	[73]
Diazinon[73]	µg/L	24-hour composite	annually	[73]
Perchlorate[74]	µg/L	24-hour composite	annually	[74]
1,4-Dioxane[74]	µg/L	24-hour composite	annually	[74]
1,2,3-Trichloropropane[74]	µg/L	24-hour composite	annually	[74]
Methyl tert-butyl-ether (MTBE)[74]	µg/L	24-hour composite	annually	[74]
Remaining EPA priority pollutants[75] excluding asbestos	µg/L	24-hour composite; grab for VOCs	semiannually	[55]

REVISED TENTATIVE

D. Monitoring Locations EFF-004 and EFF-005

1. The Permittee shall monitor the discharge of tertiary-treated effluent at EFF-004 and EFF-005 as directed in this Order. Total residual chlorine, pH, and temperature are monitored at EFF-004X and EFF-005X and are required only when there is flow. Monitoring for all parameters at EFF-004 and EFF-005 is reportable to CIWQS if there is flow during the reporting month. In lieu of duplicative monitoring, results of samples collected during the month at EFF-003 may be reported to CIWQS for EFF-004 and EFF-005, during months when there is discharge from EFF-004 and EFF-005. If more than one analytical test method is listed for a given parameter, the Permittee must select from the listed methods and corresponding Minimum Level, such that compliance with effluent limitations can be determined and/or future RPA may be conducted. Discharge from outfalls EEF-004 and EEF-005 cannot begin until DDW has approved a Title 22 Engineering Report and the WRR has been adopted by the Regional Water Board.

= C_i x TEF_i). Compliance with the dioxin limitation shall be determined by the summation of the seventeen individual TEQs, or the following equation:

$$\text{Dioxin concentraton in effluent} = \sum_{1}^{17}(TEQ_i) = \sum_{1}^{17}(C_i)(TEF_i)$$

[73] Chlorpyrifos and Diazinon may be analyzed using USEPA method 8141A and EPA 525.2. Chlorpyrifos, Diazinon, and chronic effluent toxicity shall be sampled on the same day or as close to concurrently as possible.

[74] Emerging chemicals include 1,4-dioxane (USEPA 8270B test method), perchlorate (USEPA 314 test method, or USEPA method 331 if a detection limit of less than 6 µg/L is achieved), 1,2,3-trichloropropane (USEPA 504.1, 8260B test method, or USEPA 524.2 in SIM mode), and methyl tert-butyl ether (USEPA 8260B test method or USEPA method 624 if a detection level of less than 5 µg/L is achieved, and if the Permittee received ELAP certification to run USEPA method 624).

[75] Priority pollutants are those constituents referred to in 40 CFR § 401.15; a list of these pollutants is provided as Appendix A to 40 CFR Part 423.

Table E-7. Effluent Monitoring EFF-004 and/or EFF-005

Parameter	Units	Sample Type	Minimum Sampling Frequency	Required Analytical Test Method and (Minimum Level, units), respectively
Total waste flow	mgd	recorder	continuous[76]	[76,77]
Turbidity[78]	NTU	recorder	continuous [79] [80]	[55]
Total residual chlorine	mg/L	grab	daily[81]	[55]
Total coliform[78]	MPN/100mL or CFU/100mL	grab	daily[82]	[55]
Fecal coliform[83]	MPN/100mL or CFU/100mL	grab	weekly	[55]
E. coli[84]	MPN/100mL or CFU/100mL	grab	weekly	[55]
Temperature[85]	°F	grab	weekly	[55]
pH[86]	pH units	grab	weekly	[55]

REVISED TENTATIVE

[76] Where continuous monitoring of a constituent is required, the following shall be reported:
Total waste flow – Total daily, monthly average, and peak daily flow (24-hour basis);
Turbidity – maximum daily value, total amount of time each day the turbidity exceeded five turbidity units, flow-proportioned average daily value.

[77] Pollutants shall be analyzed using the analytical methods described in 40 CFR Part 136; where no methods are specified for a given pollutant, by methods approved by this Regional Water Board or State Water Resources Control Board. For any pollutant whose effluent limitation is lower than all the minimum levels (MLs) specified in Attachment 4 of the SIP, the analytical method with the lowest ML must be selected.

[78] Coliform and turbidity samples shall be obtained at some point in the treatment process at a time when wastewater flow and characteristics are most demanding on the treatment facilities, filtration, and disinfection procedures

[79] Grab samples may be collected for turbidity at monitoring location EFF-004 and 005 to determine compliance with the 10 NTU limit.

[80] A flow-weighted 24-hour composite sample may be collected for turbidity at monitoring location EFF-004 and EFF-005 in place of the recorder to determine the flow-proportioned average daily value.

[81] Total residual chlorine cannot be monitored using a continuous recorder at Discharge Nos. 004 and 005and is only monitoring by a grab sample at these outfalls. These outfalls are at a remote location in a streambed several miles upstream of the plant. Equipment cannot be maintained there due to vandalism and storm flooding. Analytical results of daily grab samples will be used to determine compliance with total residual chlorine effluent limitation at EFF-004X and 005X

[82] Daily samples shall be collected Monday through Friday, except for holidays.

[83] Fecal coliform testing shall be conducted only if total coliform testing is positive. If the total coliform analysis results in no detection, a result of "< the reporting limit" for total coliform will be reported for both fecal coliform and *E. coli.*

[84] E. coli testing shall be conducted only if fecal coliform testing is positive. If the fecal coliform analysis results in no detection, a result of less than (<) the reporting limit for fecal coliform will be reported for E. coli.

[85] Nitrate nitrogen, nitrite nitrogen, ammonia nitrogen, organic nitrogen, total kjeldahl nitrogen, pH, and temperature sampling shall be conducted on the same day or as close to concurrently as possible.

Parameter	Units	Sample Type	Minimum Sampling Frequency	Required Analytical Test Method and (Minimum Level, units), respectively
Settleable solids	mL/L	grab	weekly	[55]
Total suspended solids (TSS)	mg/L	24-hour composite	weekly	[55]
BOD_5 20°C	mg/L	24-hour composite	weekly[86]	[55]
Oil and grease	mg/L	grab	quarterly	[55]
Dissolved oxygen	mg/L	grab	monthly	[55]
Total Dissolved Solids	mg/L	24-hour composite	monthly	[55]
Sulfate	mg/L	24-hour composite	monthly	[55]
Chloride	mg/L	24-hour composite	monthly	[55]
Boron	mg/L	24-hour composite	monthly	[55]
Ammonia Nitrogen[85]	mg/L	24-hour composite	monthly	[55]
Nitrite nitrogen[85]	mg/L	24-hour composite	monthly	[55]
Nitrate plus nitrite as nitrogen[85]	mg/L	24-hour composite	monthly	[55]
Organic nitrogen[85]	mg/L	24-hour composite	monthly	[55]
Total kjeldahl nitrogen (TKN)[85]	mg/L	24-hour composite	monthly	[55]
Total nitrogen	mg/L	24-hour composite	monthly	[55]
Total phosphorus	mg/L	24-hour composite	monthly	[55]
Orthophosphate-P	mg/L	24-hour composite	monthly	[55]
Surfactants (MBAS)[87]	mg/L	24-hour composite	quarterly	[55]
Surfactants (CTAS)[87]	mg/L	24-hour composite	quarterly	[55]
Total hardness ($CaCO_3$)	mg/L	24-hour composite	monthly	[55]
Chronic toxicity	Pass or Fail, % Effect (TST)	24-hour composite	monthly[88]	[55]
Antimony	µg/L	24-hour composite	semiannually	[55]
Arsenic	µg/L	24-hour composite	monthly	[55]
Cadmium	µg/L	24-hour composite	semiannually	[55]
Chromium III[89]	µg/L	calculated	semiannually	[55]

REVISED TENTATIVE

[86] If the result of the weekly BOD analysis yields a value greater than the AMEL, the frequency of analysis shall be increased to daily within one week of knowledge of the test result for at least 30 days and until compliance with the AWEL and AMEL BOD limits is demonstrated; after which the frequency shall revert to weekly.

[87] MBAS is Methylene blue active substances and CTAS is cobalt thiocyanate active substances.

[88] The Permittee shall conduct whole effluent toxicity monitoring as outlined in section V. Please refer to section V.A.7 of this MRP for the accelerated monitoring schedule. The median monthly summary result shall be reported as “Pass” or “Fail.” The maximum daily single result shall be reported as “Pass” or “Fail” and “% Effect.” When there is a discharge more than one day in a calendar month period, up to three independent toxicity tests may be conducted when one toxicity test results in “Fail.”

[89] The results for Chromium III shall be calculated by subtracting the Chromium VI concentration from the Total Chromium concentration.

Parameter	Units	Sample Type	Minimum Sampling Frequency	Required Analytical Test Method and (Minimum Level, units), respectively
Chromium VI	µg/L	grab	semiannually	[55]
Total Chromium	µg/L	grab	semiannually	[55]
Copper	µg/L	24-hour composite	monthly	[55]
Lead	µg/L	24-hour composite	monthly	[55]
Mercury	µg/L	24-hour composite	semiannually	[55]
Nickel	µg/L	24-hour composite	semiannually	[55]
Selenium	µg/L	24-hour composite	monthly	[55]
Silver	µg/L	24-hour composite	semiannually	[55]
Thallium	µg/L	24-hour composite	semiannually	[55]
Zinc	µg/L	24-hour composite	semiannually	[55]
Cyanide	µg/L	Grab	semiannually	[55]
Bis(2-ethylhexyl)phthalate	µg/L	24-hour composite	semiannually	[55]
Total Trihalomethanes[90]		Grab/calculated sum	monthly	[55]
PCBs as aroclors[91]	µg/L	24-hour composite	annually	[55]
PCBs as congeners[92]	µg/L	24-hour composite	annually	[55]
Fluoride	mg/L	24-hour composite	semiannually	[55]
Iron	µg/L	24-hour composite	semiannually	[55]
Radioactivity (Including gross alpha, gross beta, combined radium-226 and radium-228, tritium, strontium-90 & uranium)[93]	pCi/L	24-hour composite	semiannually	[93]
2,3,7,8-TCDD[94]	pg/L	24-hour composite	semiannually	[72]

REVISED TENTATIVE

[90] Total Trihalomethanes is the sum of concentrations of the trihalomethane compounds: bromodichloromethane, bromoform, chloroform, and dibromochloromethane.

[91] PCBs as Aroclors is the sum of PCB 1016, PCB 1221, PCB 1232, PCB 1242, PCB 1248, PCB 1254, and PCB 1260 when monitoring using USEPA method 608.

[92] PCBs as Congeners means the sum of 41 congeners when monitoring using USEPA proposed method 1668c. PCB-18, 28, 37, 44, 49, 52, 66, 70, 74, 77, 81, 87, 99, 101, 105,110, 114, 118, 119, 123, 126, 128, 138, 149, 151, 153, 156, 157, 158, 167, 168, 169, 170, 177, 180, 183, 187, 189, 194, 201, and 206 shall be individually quantified. PCBs as congeners shall be analyzed using method EPA 1668c for three years and may be discontinued for the remaining life of this Order if none of the PCB congeners are detected using method EPA 1668c. USEPA recommends that until USEPA proposed method 1668c for PCBs is incorporated into 40 CFR Part 136, Permittees should use for discharge monitoring reports/State monitoring reports.

[93] Analyze these radiochemicals by the following USEPA methods: method 900.0 for gross alpha and gross beta, method 903.0 or 903.1 for radium-226, method 904.0 for radium-228, method 906.0 for tritium, method 905.0 for strontium-90, and method 908.0 for uranium. Analysis for combined radium-226 & 228 shall be conducted only if gross alpha results for the same sample exceed 15 pCi/L or beta greater than 50 pCi/L. If radium-226 & 228 exceeds the stipulated criteria, analyze for tritium, strontium-90 and uranium.

[94] In accordance with the SIP, the Permittee shall conduct effluent monitoring for the seventeen 2,3,7,8-tetrachlorodibenzo-p-dioxin (2,3,7,8-TCDD or dioxin) congeners in the effluent and in the receiving water Station RSW-010, located upstream of the discharge point no. 004 and 005. The Permittee shall use the appropriate Toxicity

Parameter	Units	Sample Type	Minimum Sampling Frequency	Required Analytical Test Method and (Minimum Level, units), respectively
Chlorpyrifos[95]	µg/L	24-hour composite	annually	[73]
Diazinon[95]	µg/L	24-hour composite	annually	[73]
Perchlorate[96]	µg/L	24-hour composite	annually	[74]
1,4-Dioxane[96]	µg/L	24-hour composite	annually	[74]
1,2,3-Trichloropropane[96]	µg/L	24-hour composite	annually	[74]
Methyl tert-butyl-ether (MTBE)[96]	µg/L	24-hour composite	annually	[74]
Remaining EPA priority pollutants[97] excluding asbestos	µg/L	24-hour composite; grab for VOCs	semiannually	[55]

REVISED TENTATIVE

E. Total Residual Chlorine Additional Monitoring

Continuous monitoring of total residual chlorine at the current location shall serve as an internal trigger for the increased grab sampling at effluent sampling points if either of the following occurs, except as noted in item 3:

1. Total residual chlorine concentration excursions of up to 0.3 mg/L lasting greater than 15 minutes; or
2. Total residual chlorine concentration peaks in excess of 0.3 mg/L lasting greater than 1 minute.
3. Additional grab samples need not be taken if it can be demonstrated that a stoichiometrically appropriate amount of dechlorination chemical has been added to effectively dechlorinate the effluent to 0.1 mg/L or less for peaks in excess of 0.3 mg/L lasting more than 1 minute, but not for more than five minutes.

V. WHOLE EFFLUENT TOXICITY TESTING REQUIREMENTS

Equivalence Factor (TEF) to determine Toxic Equivalence (TEQ). Where TEQ equals the product between each of the 17 individual congeners' (i) concentration analytical result (C_i) and their corresponding Toxicity Equivalence Factor (TEF_i), (i.e., $TEQ_i = C_i \times TEF_i$). Compliance with the dioxin limitation shall be determined by the summation of the seventeen individual TEQs, or the following equation:

$$\text{Dioxin concentraton in effluent} = \sum_{1}^{17}(TEQ_i) = \sum_{1}^{17}(C_i)(TEF_i)$$

[95] Chlorpyrifos and Diazinon may be analyzed using USEPA method 8141A and EPA 525.2. Chlorpyrifos, Diazinon, and chronic effluent toxicity shall be sampled on the same day or as close to concurrently as possible.

[96] Emerging chemicals include 1,4-dioxane (USEPA 8270B test method), perchlorate (USEPA 314 test method, or USEPA method 331 if a detection limit of less than 6 µg/L is achieved), 1,2,3-trichloropropane (USEPA 504.1, 8260B test method, or USEPA 524.2 in SIM mode), and methyl tert-butyl ether (USEPA 8260B test method or USEPA method 624 if a detection level of less than 5 µg/L is achieved, and if the Permittee received ELAP certification to run USEPA method 624).

[97] Priority pollutants are those constituents referred to in 40 CFR § 401.15; a list of these pollutants is provided as Appendix A to 40 CFR Part 423.

A. Chronic Toxicity

1. Discharge In-stream Waste Concentration (IWC) for Chronic Toxicity

The chronic toxicity IWC for this discharge is 100 percent effluent.

2. Sample Volume and Holding Time

The total sample volume shall be determined by the specific toxicity test method used. Sufficient sample volume shall be collected to perform the required toxicity test. For the receiving water, sufficient sample volume shall also be collected during accelerated monitoring for subsequent TIE studies, if necessary, at each sampling event. All toxicity tests shall be conducted as soon as possible following sample collection. No more than 36 hours shall elapse before the conclusion of sample collection and test initiation.

3. Chronic Freshwater Species and Test Methods

If effluent samples are collected from outfalls discharging to receiving waters with salinity <1 ppt, the Permittee shall conduct the following chronic toxicity tests on effluent samples at the in-stream waste concentration for the discharge in accordance with species and test methods in Short-term Methods for Estimating the Chronic Toxicity of Effluents and Receiving Waters to Freshwater Organisms (EPA/821/R-02/013, 2002; Table IA, 40 CFR Part 136). In no case shall these species be substituted with another test species unless written authorization from the Executive Officer is received.

a. A static renewal toxicity test with the fathead minnow, Pimephales promelas (Larval Survival and Growth Test Method 1000.0).

b. A static toxicity test with the daphnid, Ceriodaphnia dubia (Survival and Reproduction Test Method 1002.0).

c. A static renewal toxicity test with the green alga, Selenastrum capricornutum (also named Raphidocelis subcapitata) (Growth Test Method 1003.0).

4. Species Sensitivity Screening

Species sensitivity screening shall be conducted beginning the first month the permit is in effect. The Permittee shall collect a single effluent sample to initiate and concurrently conduct three toxicity tests using the fish, an invertebrate, and the alga species previously referenced. This sample shall also be analyzed for the parameters required on a monthly frequency for the discharge during that given month. As allowed under the test method for the Ceriodaphnia dubia and the Fathead minnow, a second and third sample may be collected for use as test solution renewal water as the seven-day toxicity test progresses. However, that same sample shall be used to renew both the Ceriodaphnia dubia and the Fathead minnow. If the result of all three species is “Pass”, then the species that exhibits the highest “Percent Effect” at the discharge IWC during species sensitivity screening shall be used for routine monitoring during the permit cycle. If only one species fails, then that species shall be used for routine monitoring during the permit cycle. If two or more species result in “Fail,” then the species that exhibits the highest “Percent Effect” at the discharge IWC during the suite of species sensitivity screening shall be used for routine monitoring during the permit cycle, until such time as a rescreening is required (24 months later).

Species sensitivity rescreening is required every 24 months if there has been discharge during dry weather conditions. If the intermittent discharge is only during wet weather, rescreening is not required. If rescreening is necessary, the Permittee shall rescreen with

REVISED TENTATIVE

the fish, an invertebrate, and the alga species previously referenced and continue to monitor with the most sensitive species. If the first suite of rescreening tests demonstrates that the same species is the most sensitive then the rescreening does not need to include more than one suite of tests. If a different species is the most sensitive or if there is ambiguity, then the Permittee shall proceed with suites of screening tests for a minimum of three, but not to exceed five suites.

During the calendar month, toxicity tests used to determine the most sensitive test species shall be reported as effluent compliance monitoring results for the chronic toxicity MDEL and MMEL.

5. **Quality Assurance and Additional Requirements**

Quality assurance measures, instructions, and other recommendations and requirements are found in the test methods manual previously referenced. Additional requirements are specified below.

The discharge is subject to determination of “Pass” or “Fail” from a chronic toxicity test using the Test of Significant Toxicity (TST) statistical t-test approach described in *National Pollutant Discharge Elimination System Test of Significant Toxicity Implementation Document* (EPA 833-R-10-003, 2010), Appendix A, Figure A-1 and Table A-1 and Appendix B, Table B-1. The null hypothesis (Ho) for the TST statistical approach is: Mean discharge IWC response ≤0.75 × Mean control response. A test result that rejects this null hypothesis is reported as “Pass”. A test result that does not reject this null hypothesis is reported as “Fail”. The relative “Percent Effect” at the discharge IWC is defined and reported as: ((Mean control response - Mean discharge IWC response) ÷ Mean control response)) × 100. This is a t-test (formally Student’s t-Test), a statistical analysis comparing two sets of replicate observations—in the case of WET, only two test concentrations (i.e., a control and IWC). The purpose of this statistical test is to determine if the means of the two sets of observations are different (i.e., if the IWC or receiving water concentration differs from the control (the test result is “Pass” or “Fail”)). The Welch’s t-test employed by the TST statistical approach is an adaptation of Student’s t-test and is used with two samples having unequal variances.

a. The Median Monthly Effluent Limitation (MMEL) for chronic toxicity only applies when there is a discharge more than one day in a calendar month period. During such calendar months, up to three independent toxicity tests may be conducted when one toxicity test results in “Fail”.

b. If the effluent toxicity test does not meet all test acceptability criteria (TAC) specified in the referenced test method, *Short-term Methods for Estimating the Chronic Toxicity of Effluents and Receiving Waters to Freshwater Organisms* (U.S. EPA 2002, EPA-821-R-02-013) (see Table E-8, below), then the Permittee must re-sample and re-test within 14 days.

c. Dilution water and control water, including brine controls, shall be laboratory water prepared and used as specified in the test methods manual. If dilution water and control water is different from test organism culture water, then a second control using culture water shall also be used.

REVISED TENTATIVE

d. Monthly reference toxicant testing is sufficient. All reference toxicant test results should be reviewed and reported using the EC25[5].

e. The Permittee shall perform toxicity tests on final effluent samples. Chlorine in the final effluent sample may be removed prior to conducting toxicity tests in order to simulate the dechlorination process at the facility. However, ammonia shall not be removed from the effluent sample prior to toxicity testing, unless explicitly authorized under this section of the Monitoring and Reporting Program and the rational is explained in the Fact Sheet (Attachment F).

Table E-8. USEPA Test Methods and Test Acceptability Criteria

Species & USEPA Test Method Number	Test Acceptability Criteria (TAC)
Fathead Minnow, *Pimephales promelas*, Larval Survival and Growth Test Method 1000.0 (Table 1 of the test method, above).	80% or greater survival in controls; average dry weight per surviving organism in control chambers equals or exceeds 0.25 mg. (required)
Daphnid, *Ceriodaphnia dubia*, Survival and Reproduction Test Method 1002.0 (Table 3 of the test method, above).	80% or greater survival of all control organisms and an average of 15 or more young per surviving female in the control solutions. 60% of surviving control females must produce three broods.(required)
Green Alga, *Selenastrum capricornutum*, Growth Toxicity Test Method 1003.0 (Table 3 of the test method, above).	Mean cell density of at least 1 X 10^6 cells/mL in the controls; and variability (CV%) among control replicates less than or equal to 20%. (required)

6. **Preparation of an Initial Investigation TRE Work Plan**

The Permittee shall prepare and submit a copy of the Permittee's initial investigation TRE work plan to the Executive Officer of the Regional Water Board for approval within 90 days of the effective date of this permit. If the Executive Officer does not disapprove the work plan within 60 days, the work plan shall become effective. The Permittee shall use USEPA manual EPA/833B-99/002 (municipal) as guidance, or most current version. At a minimum, the TRE Work Plan must contain the provisions in Attachment G. This work plan shall describe the steps that the Permittee intends to follow if toxicity is detected. At minimum, the work plan shall include:

a. A description of the investigation and evaluation techniques that will be used to identify potential causes and sources of toxicity, effluent variability, and treatment system efficiency.

b. A description of the Facility's methods of maximizing in-house treatment efficiency and good housekeeping practices, and a list of all chemicals used in the operation of the Facility; and,

[5] EC25 is a point estimate of the toxicant concentration that would cause an observable adverse effect (e.g., death, immobilization, or serious incapacitation) in 25 percent of the test organisms.

REVISED TENTATIVE

c. If a TIE is necessary, an indication of the person who would conduct the TIEs (i.e., an in-house expert or an outside contractor).

7. **Accelerated Monitoring Schedule for Median Monthly Summary Result: "Fail"; and Accelerated Monitoring Schedule for Maximum Daily Single Result: "Fail and % Effect ≥50".**

When there is discharge more than one day in a calendar month, the Median Monthly summary result shall be used to determine if accelerated testing needs to be conducted. When there is discharge of only one day in a calendar month, the Maximum Daily single result shall be used to determine if accelerated testing needs to be conducted.

Once the Permittee becomes aware of this result, the Permittee shall implement an accelerated monitoring schedule within 48 hours for the *Ceriodaphnia dubia* test, and within 5 calendar days for both the *Pimephales promelas* and *Selenastrum capricornutum* tests. However, if the sample is contracted out to a commercial laboratory, the Permittee shall ensure that the first of four accelerated monitoring tests is initiated within seven calendar days of the Permittee becoming aware of the result. The accelerated monitoring schedule shall consist of four toxicity tests (including the discharge IWC), conducted at approximately two week intervals, over an eight week period; in preparation for the TRE process and associated reporting, these results shall also be reported using the EC25. If each of the accelerated toxicity tests results in "Pass", the Permittee shall return to routine monitoring for the next monitoring period. If one of the accelerated toxicity tests results in "Fail", the Permittee shall immediately implement the TRE Process conditions set forth below. During accelerated monitoring schedules, only TST results ("Pass" or "Fail", "Percent Effect") for chronic toxicity tests shall be reported as effluent compliance monitoring results for the chronic toxicity MDEL and MMEL.

8. **Toxicity Reduction Evaluation (TRE) Process**

During the TRE Process, monthly effluent monitoring shall resume and TST results ("Pass" or "Fail", "Percent Effect") for chronic toxicity tests shall be reported as effluent compliance monitoring results for the chronic toxicity MDEL and MMEL.

a. **Preparation and Implementation of Detailed TRE Work Plan**. The Permittee shall immediately initiate a TRE using, according to the type of treatment facility, USEPA manual *Toxicity Reduction Evaluation Guidance for Municipal Wastewater Treatment Plants* (EPA/833/B-99/002, 1999) and, within 15 days, submit to the Executive Officer a Detailed TRE Work Plan, which shall follow the TRE Work Plan revised as appropriate for this toxicity event. It shall include the following information, and comply with additional conditions set by the Executive Officer:

i. Further actions by the Permittee to investigate, identify, and correct the causes of toxicity.

ii. Actions the Permittee will take to mitigate the effects of the discharge and prevent the recurrence of toxicity.

iii. A schedule for these actions, progress reports, and the final report.

b. **TIE Implementation.** The Permittee may initiate a TIE as part of a TRE to identify the causes of toxicity using the same species and test method and, as guidance, USEPA manuals: *Methods for Aquatic Toxicity Identification Evaluations: Phase I Toxicity Characterization Procedures* (EPA/600/6-91/003, 1991); *Methods for*

REVISED TENTATIVE

Aquatic Toxicity Identification Evaluations, Phase II Toxicity Identification Procedures for Samples Exhibiting Acute and Chronic Toxicity (EPA/600/R-92/080, 1993); *Methods for Aquatic Toxicity Identification Evaluations, Phase III Toxicity Confirmation Procedures for Samples Exhibiting Acute and Chronic Toxicity* (EPA/600/R-92/081, 1993); and *Marine Toxicity Identification Evaluation (TIE): Phase I Guidance Document* (EPA/600/R-96-054, 1996). The TIE should be conducted on the species demonstrating the most sensitive toxicity response.

c. Many recommended TRE elements parallel required or recommended efforts for source control, pollution prevention, and storm water control programs. TRE efforts should be coordinated with such efforts. As toxic substances are identified or characterized, the Permittee shall continue the TRE by determining the sources and evaluating alternative strategies for reducing or eliminating the substances from the discharge. All reasonable steps shall be taken to reduce toxicity to levels consistent with toxicity evaluation parameters.

d. The Permittee shall continue to conduct routine effluent monitoring for compliance determination purposes while the TIE and/or TRE process is taking place. Additional accelerated monitoring and TRE work plans are not required once a TRE is begun.

e. The Regional Water Board recognizes that toxicity may be episodic and identification of causes and reduction of sources of toxicity may not be successful in all cases. The TRE may be ended at any stage if monitoring finds there is no longer toxicity.

f. The Board may consider the results of any TIE/TRE studies in an enforcement action.

9. **Reporting**

The Self-Monitoring Report (SMR) shall include a full laboratory report for each toxicity test. This report shall be prepared using the format and content of the test methods manual chapter called Report Preparation, and shall include:

a. The valid toxicity test results for the TST statistical approach, reported as “Pass” or “Fail” and “Percent Effect” at the chronic toxicity IWC for the discharge. All toxicity test results (whether identified as valid or otherwise) conducted during the calendar month shall be reported on the SMR due date specified in Table E-11.

b. Summary water quality measurements for each toxicity test (e.g., pH, dissolved oxygen, temperature, conductivity, hardness, salinity, chlorine, ammonia).

c. The statistical analysis used in *National Pollutant Discharge Elimination System Test of Significant Toxicity Implementation Document* (EPA 833-R-10-003, 2010) Appendix A, Figure A-1 and Table A-1, and Appendix B, Table B-1.

d. TRE/TIE results. The Executive Officer shall be notified no later than 30 days from completion of each aspect of TRE/TIE analyses. Prior to the completion of the final TIE/TRE report, the Permittee shall provide status updates in the monthly monitoring reports, indicating which TIE/TRE steps are underway and which steps have been completed.

e. Statistical program (e.g., TST calculator, CETIS, etc.) output results, including graphical plots, for each toxicity test.

REVISED TENTATIVE

f. Graphical plots clearly showing the laboratory's performance for the reference toxicant for the previous 20 tests and the laboratory's performance for the control mean, control standard deviation, and control coefficient of variation for the previous 12-month period.

g. Any additional QA/QC documentation or any additional chronic toxicity-related information, upon written request from the Regional Water Board Chief Deputy Executive Officer or Executive Officer.

B. Ammonia Removal

1. Except with prior approval from the Executive Officer of the Regional Water Board, ammonia shall not be removed from bioassay samples. The Permittee must demonstrate the effluent toxicity is caused by ammonia because of increasing test pH when conducting the toxicity test. It is important to distinguish the potential toxic effects of ammonia from other pH sensitive chemicals, such as certain heavy metals, sulfide, and cyanide. The following may be steps to demonstrate that the toxicity is caused by ammonia and not other toxicants before the Executive Officer would allow for control of pH in the test.

   a. There is consistent toxicity in the effluent and the maximum pH in the toxicity test is in the range to cause toxicity due to increased pH.

   b. Chronic ammonia concentrations in the effluent are greater than 4 mg/L total ammonia.

   c. Conduct graduated pH tests as specified in the toxicity identification evaluation methods. For example, mortality should be higher at pH 8 and lower at pH 6.

   d. Treat the effluent with a zeolite column to remove ammonia. Mortality in the zeolite treated effluent should be lower than the non-zeolite treated effluent. Then add ammonia back to the zeolite-treated samples to confirm toxicity due to ammonia.

2. When it has been demonstrated that toxicity is due to ammonia because of increasing test pH, pH may be controlled using appropriate procedures which do not significantly alter the nature of the effluent, after submitting a written request to the Regional Water Board, and receiving written permission expressing approval from the Executive Officer of the Regional Water Board.

C. Chlorine Removal

Except with prior approval from the Executive Office of the Regional Water Board, chlorine shall not be removed from bioassay samples. However, chlorine may be removed from the San Jose Creek WRP effluent bioassay samples in the laboratory because often the recycled water demand is high and there is no effluent water available for sampling and the sampling locations and logistics are not feasible.

VI. LAND DISCHARGE MONITORING REQUIREMENTS– Not Applicable

VII. RECYCLING MONITORING REQUIREMENTS -- Not Applicable

VIII. RECEIVING WATER MONITORING REQUIREMENTS

REVISED TENTATIVE

A. Monitoring Locations RSW-001 (C-1), RSW-002 (C-2), RSW-003 (R-10), RSW-004 (R-11), RSW-005 (R-2), RSW-006 (R-12), RSW-007 (R-13), RSW-008, RSW-009, RSW-010, and RSW-011.

1. The Permittee shall monitor receiving water at RSW-001 (C-1), RSW-002 (C-2), RSW-003 (R-10), RSW-004 (R-11), RSW-005 (R-2), RSW-006 (R-12), RSW-007 (R-13), RSW-008[98], RSW-009, RSW-010[99], and RSW-011 as follows. Monitoring requirements at RSW-006 (R-12) or RSW-007 (R-13), are applicable when reclaimed water is discharged through Discharge Point Nos. 001A or 001B. Temperature and pH monitored at RSW-002, RSW-004, RSW-005, RSW-006, RSW-007, RSW-009 and RSW-011 are used to calculate the receiving water ammonia water quality objectives. Water shall be sampled at each location when present. However, monitoring does not need to be conducted at RSW-008, RSW-009, RSW-010, and RSW-011 if there is no discharge.

Table E-9. Receiving Water Monitoring Requirements at RSW-001 (C-1), RSW-002 (C-2), RSW-003 (R-10), RSW-004 (R-11), RSW-005 (R-2), RSW-006 (R-12), RSW-007 (R-13), RSW-008, RSW-009, RSW-010, and RSW-011.

Parameter	Units	Sample Type	Minimum Sampling Frequency	Required Analytical Test Method
Total Flow[99]	cfs	Calculation	monthly	--
Turbidity	NTU	Grab	monthly	[100]
Temperature[101]	°F	Grab	monthly	[101]
pH[102]	pH units	Grab	monthly	[101]
E.Coli	MPN/100ml or CFU/100ml	Grab	monthly	[101]
Total residual chlorine	mg/L	Grab	monthly	[101]
Settleable Solids	mL/L	Grab	monthly	[101]
Total Suspended Solids	mg/L	Grab	monthly	[101]
BOD_5 20°C	mg/L	Grab	monthly	[101]
Oil and grease	mg/L	Grab	quarterly	[101]
Dissolved oxygen	mg/L	Grab	monthly	[101]
Total Hardness	mg/L	Grab	monthly	[101]

REVISED TENTATIVE

[98] Three samples are to be collected upstream of EFF-005 if there is discharge from the outfalls during the permit term, for background data in future RPA calculation. If sampling cannot take place at RSW-008 or RSW-010, the Permittee shall collect background information from another appropriate sampling location and identify this location in the subsequent annual report.

[99] When conditions at receiving water stations RSW-001, RSW-002, RSW-003, RSW-004, RSW-006, RSW-007, RSW-008, RSW-009, RSW-010, and RSW-011 prevent accurate measurement of the flow, the flow may be qualitatively estimated and reported.

[100] Pollutants shall be analyzed using the analytical methods described in 40 CFR Part 136; where no methods are specified for a given pollutant, by methods approved by this Regional Water Board or State Water Board. For any pollutant whose effluent limitation is lower than all the MLs specified in Attachment 4 of the SIP, the analytical method with the lowest ML must be selected.

[101] Nitrate nitrogen, nitrite nitrogen, ammonia nitrogen, organic nitrogen, total kjeldahl nitrogen, pH, and temperature sampling shall be conducted on the same day or as close to concurrently as possible.

Parameter	Units	Sample Type	Minimum Sampling Frequency	Required Analytical Test Method
($CaCO_3$)				
Conductivity	µmho/cm	Grab	monthly	[101]
Total Dissolved Solids	mg/L	Grab	monthly	[101]
Sulfate	mg/L	Grab	monthly	[101]
Chloride	mg/L	Grab	monthly	[101]
Boron	mg/L	Grab	monthly	[101]
Chronic toxicity[102]	Pass or Fail, % Effect (TST)	Grab	quarterly	[101]
Nitrate plus nitrite as nitrogen[102]	mg/L	Grab	monthly	[101]
Nitrite nitrogen[102]	mg/L	Grab	monthly	[101]
Ammonia nitrogen[102]	mg/L	Grab	monthly	[101]
Organic nitrogen[102]	mg/L	Grab	monthly	[101]
Total kjeldahl nitrogen (TKN) [102]	mg/L	Grab	monthly	[101]
Total nitrogen	mg/L	Calculation	monthly	[101]
Total phosphorus	mg/L	Grab	monthly	[101]
Orthophosphate-p	mg/L	Grab	monthly	[101]
Surfactants (MBAS)	mg/L	Grab	quarterly	[101]
Surfactants (CTAS)	mg/L	Grab	quarterly	[101]
Selenium	µg/L	Grab	monthly	[101]
PCBs as aroclors [103]	µg/L	Grab	annually	[101]
PCBs as congeners[104]	µg/L	Grab	annually	[101]

REVISED TENTATIVE

[102] The Permittee shall conduct Whole Effluent Toxicity monitoring as outlined in section V. Please refer to section V.A.7 of this MRP for the accelerated monitoring schedule. The median monthly summary result is a threshold value for determination of meeting the narrative receiving water objective and shall be reported as “Pass” or “Fail.” The maximum daily single result is a threshold value for a determination of meeting the narrative receiving water objective and shall be reported as “Pass or Fail” with a “% Effect.” Up to three independent toxicity tests may be conducted when one toxicity test results in “Fail.” If the chronic toxicity median monthly threshold at the immediate downstream receiving water location is not met and the toxicity cannot be attributed to upstream toxicity, as assessed by the Permittee, then the Permittee shall initiate accelerated monitoring. For example, if the chronic toxicity median monthly threshold of the receiving water at both upstream and downstream stations is not met, but the effluent chronic toxicity median monthly effluent limitation was met, then accelerated monitoring need not be implemented.

[103] PCBs as aroclors is the sum of PCB 1016, PCB 1221, PCB 1232, PCB 1242, PCB 1248, PCB 1254, and PCB 1260 when monitoring using USEPA method 608.

[104] PCBs as congeners means the sum of 41 congeners when monitoring using USEPA proposed method 1668c. PCB-18, 28, 37, 44, 49, 52, 66, 70, 74, 77, 81, 87, 99, 101, 105,110, 114, 118, 119, 123, 126, 128, 138, 149, 151, 153, 156, 157, 158, 167, 168, 169, 170, 177, 180, 183, 187, 189, 194, 201, and 206 shall be individually quantified. PCBs as congeners shall be analyzed using method EPA 1668c for three years and may be discontinued for the remaining life of this Order if none of the PCB congeners are detected using method EPA 1668c.USEPA recommends that until USEPA proposed method 1668c for PCBs is incorporated into 40 CFR Part 136, Permittees should use for discharge monitoring reports/State monitoring reports: (1) USEPA method 608 for monitoring data, reported as aroclor results, that will be used for assessing compliance with WQBELs, and (2) USEPA proposed method 1668c with lower detection levels for monitoring data, reported as 41 congener results, that will be used for informational purposes.

Parameter	Units	Sample Type	Minimum Sampling Frequency	Required Analytical Test Method
Chromium III	µg/L	Calculation	semiannually	[101]
Chromium VI	µg/L	Grab	semiannually	[101]
Lead	µg/L	Grab	monthly	[101]
Fluoride	mg/L	Grab	semiannually	[101]
Barium	µg/L	Grab	semiannually	[101]
Methoxychlor	µg/L	Grab	semiannually	[101]
Chlorpyrifos[105]	µg/L	Grab	semiannually	[101]
Diazinon[106]	µg/L	Grab	semiannually	[101]
2,3,7,8-TCDD[106]	pg/L	Grab	semiannually	[101]
1,4-Dioxane[107]	µg/L	Grab	annually	[96]
Perchlorate[108]	µg/L	Grab	annually	[96]
1,2,3-Trichloropropane[108]	µg/L	Grab	annually	[96]
Methyl tert-butyl-ether (MTBE)[108]	µg/L	Grab	annually	[96]
Remaining EPA priority pollutants[108] excluding asbestos	µg/L	Grab	semiannually	[101]

2. Receiving water samples shall not be taken during or within 48-hours following the flow of rainwater runoff into the San Gabriel River. Sampling may be rescheduled within the same calendar month, at receiving water stations, if weather and/or flow conditions would endanger personnel collecting receiving water samples. The monthly monitoring report shall note such occasions.

REVISED TENTATIVE

---

[105] Chlorpyrifos and Diazinon may be analyzed using USEPA method 8141A and EPA 525.2. Chlorpyrifos, Diazinon, and chronic effluent toxicity shall be sampled on the same day or as close to concurrently as possible.

[106] In accordance with the SIP, the Permittee shall conduct effluent monitoring for the seventeen 2,3,7,8-tetrachlorodibenzo-p-dioxin (2,3,7,8-TCDD or dioxin) congeners in the effluent and in the receiving water Stations RSW-001 and RSW-003. The Permittee shall use the appropriate TEF to determine TEQ. Where TEQ equals the product between each of the 17 individual congeners' (i) concentration analytical result (C_i) and their corresponding TEF_i., (i.e., $TEQ_i = C_i \times TEF_i$). Compliance with the dioxin limitation shall be determined by the summation of the seventeen individual TEQs, or the following equation:

$$\text{Dioxin concentraton} = \sum_{1}^{17}(TEQ_i) = \sum_{1}^{17}(C_i)(TEF_i)$$

[107] Emerging chemicals include 1,4-dioxane (USEPA 8270B test method), perchlorate (USEPA 314 test method, or USEPA method 331 if a detection limit of less than 6 µg/L is achieved), 1,2,3-trichloropropane (USEPA 504.1, 8260B test method, or USEPA 524.2 in SIM mode), and methyl tert-butyl ether (USEPA 8260B test method or USEPA method 624 if a detection level of less than 5 µg/L is achieved, and if the Permittee received ELAP certification to run USEPA method 624).

[108] Priority pollutants are those constituents referred to in 40 CFR § 401.15; a list of these pollutants is provided as Appendix A to 40 CFR Part 423.

B. TMDL Stream Flow and Rainfall Monitoring

1. The Permittee shall report the maximum daily flow at the San Gabriel River at United States Geological Survey (USGS) station 11087020. This station is RSW-004D for the purpose of this permit. This information is necessary to determine the wet-weather condition of the river as defined by the Total Maximum Daily Loads for Metals and Selenium for the San Gabriel River and Impaired Tributaries as promulgated by USEPA Region IX on March 26, 2007 (*San Gabriel River Metals TMDL)*. If the gauging station is not operational, an estimated maximum daily flow may be submitted.

Table E-10. TMDL Stream Flow and Rainfall Monitoring Requirements

Parameter	Units	Sample Type	Minimum Sampling Frequency	Required Analytical Test Method
Maximum Daily Flow	cubic feet per second(cfs)	recorder	daily	N/A

IX. OTHER MONITORING REQUIREMENTS

A. Watershed Monitoring

1. The goals of the Watershed-wide Monitoring Program for the San Gabriel River Watershed are to determine compliance with receiving water limits; monitor trends in surface water quality; ensure protection of beneficial uses; provide data for modeling contaminants of concern; characterize water quality including seasonal variation of surface waters within the watershed; assess the health of the biological community; and determine mixing dynamics of effluent and receiving waters in the estuary.

2. To achieve the goals of the Watershed-wide Monitoring Program, the Permittee shall undertake the responsibilities delineated under an approved watershed-wide monitoring plan in the implementation of the Watershed-wide Monitoring Program for the San Gabriel River, which was approved by the Regional Water Board on September 25, 2006.

3. In coordination with the Los Angeles County Public Works and other interested stakeholders in the San Gabriel River Watershed, the Permittee shall conduct instream bioassessment monitoring once a year, during the spring/summer period (unless an alternate sampling period is approved by the Executive Officer) and include an analysis of the community structure of the instream macroinvertebrate assemblages, the community structure of the instream algal assemblages (benthic diatoms and soft-bodied algae), chlorophyll and biomass for instream algae, and physical habitat assessment at the random monitoring stations designated by the San Gabriel River Watershed Monitoring Program. Over time, bioassessment monitoring will provide a measure of the physical condition of the water body and the integrity of its biological communities.

   a. The bioassessment program shall include an analysis of the community structure of the instream macroinvertebrate and algal assemblages, algal biomass, and physical habitat assessment at the bioassessment monitoring stations RSW-001A, RSW-004A, and RSW-005.

      This program shall be implemented by appropriately trained staff. Alternatively, a professional subcontractor qualified to conduct bioassessments may be selected to perform the bioassessment work for the Permittee. Analyses of the results of the bioassessment monitoring program, along with photographs of the monitoring site

REVISED TENTATIVE

locations taken during sample collection, shall be submitted in the corresponding annual report. If another stakeholder, or interested party in the watershed subcontracts a qualified professional to conduct bioassessment monitoring during the same season and at the same location as specified in the MRP, then the Permittee may, in lieu of duplicative sampling, submit the data, a report interpreting the data, photographs of the site, and related QA/QC documentation in the corresponding annual report.

b. The Permittee must provide a copy of their Standard Operation Procedures (SOPs) for the Bioassessment Monitoring Program to the Regional Water Board upon request. The document must contain step-by-step field, laboratory and data entry procedures, as well as, related QA/QC procedures. The SOP must also include specific information about each bioassessment program including: assessment program description, its organization and the responsibilities of all its personnel; assessment project description and objectives; qualifications of all personnel; and the type of training each member has received.

c. Field sampling must conform to the SOP established for the California Stream Bioassessment Procedure (CSBP) or more recently established sampling protocols, such as used by the Surface Water Ambient Monitoring Program (SWAMP). Field crews shall be trained on aspects of the protocol and appropriate safety issues. All field data and sample Chain of Custody (COC) forms must be examined for completion and gross errors. Field inspections shall be planned with random visits and shall be performed by the Permittee or an independent auditor. These visits shall report on all aspects of the field procedure with corrective action occurring immediately.

d. A taxonomic identification laboratory shall process the biological samples that usually consist of subsampling organisms, enumerating and identifying taxonomic groups and entering the information into an electronic format. The Regional Water Board may require QA/QC documents from the taxonomic laboratories and examine their records regularly. Intra-laboratory QA/QC for subsampling, taxonomic validation and corrective actions shall be conducted and documented. Biological laboratories shall also maintain reference collections, vouchered specimens (the Permittee may request the return of their sample voucher collections) and remnant collections. The laboratory should participate in an (external) laboratory taxonomic validation program at a recommended level of 10% or 20%. External QA/QC may be arranged through the California Department of Fish and Game's Aquatic Bioassessment Laboratory located in Rancho Cordova, California.

4. The Executive Officer of the Regional Water Board may modify Monitoring and Reporting Program to accommodate the watershed-wide monitoring.

B. Tertiary Filter Treatment Bypasses

1. During any day that filters are bypassed, the Permittee shall monitor the effluent for BOD, suspended solids, and settleable solids, on daily basis, until it is demonstrated that the filter "bypass" has not caused an adverse impact on the receiving water.

2. The Permittee shall maintain chronological log of tertiary filter treatment process bypasses, to include the following:

   a. Date and time of bypass start and end;

REVISED TENTATIVE

b. Total duration time; and,

c. Estimated total volume bypassed

3. The Permittee shall notify Regional Water Board staff by telephone within 24 hours of the filter bypass event.

   The Permittee shall submit a written report to the Regional Water Board, according to the corresponding monthly self-monitoring report schedule. The report shall include, at a minimum, the information from the chronological log. Results from the daily effluent monitoring, required by B.1. above, shall be verbally reported to the Regional Water Board as the results become available and submitted as part of the monthly SMR.

X. REPORTING REQUIREMENTS

A. General Monitoring and Reporting Requirements

1. The Permittee shall comply with all Standard Provisions (Attachment D) related to monitoring, reporting, and recordkeeping.
2. If there is no discharge during any reporting period, the report shall so state.
3. Each monitoring report shall contain a separate section titled "Summary of Non-Compliance" which discusses the compliance record and the corrective actions taken or planned that may be needed to bring the discharge into full compliance with waste discharge requirements. This section shall clearly list all non-compliance with discharge requirements, as well as all excursions of effluent limitations.
4. The Permittee shall inform the Regional Water Board well in advance of any proposed construction activity that could potentially affect compliance with applicable requirements.
5. Each monthly monitoring report shall include a determination of compliance with receiving water ammonia water quality objectives at RSW-002, RSW-004, RSW-005, RSW-006, RSW-007, RSW-009, and RSW-011. Any exceedances of an ammonia water quality objective shall be noted in the "Summary of Non-Compliance" section of the monitoring report.

B. Self-Monitoring Reports (SMRs)

1. The Permittee shall electronically submit SMRs using the State Water Board's California Integrated Water Quality System (CIWQS) Program Web site (http://www.waterboards.ca.gov/ciwqs/index.html). The CIWQS Web site will provide additional information for SMR submittal in the event there will be a planned service interruption for electronic submittal.
2. The Permittee shall report in the SMR the results for all monitoring specified in this MRP under sections III through IX. The Permittee shall submit monthly, quarterly, semiannual, annual SMRs including the results of all required monitoring using U.S. EPA-approved test methods or other test methods specified in this Order. SMRs are to include all new monitoring results obtained since the last SMR was submitted. If the Permittee monitors any pollutant more frequently than required by this Order, the results of this monitoring shall be included in the calculations and reporting of the data submitted in the SMR.
3. Monitoring periods and reporting for all required monitoring shall be completed according to the following schedule:

REVISED TENTATIVE

Table E-11. Monitoring Periods and Reporting Schedule

Sampling Frequency	Monitoring Period Begins On…	Monitoring Period	SMR Due Date
Continuous	Permit effective date	All	Submit with monthly SMR
Daily	Permit effective date	(Midnight through 11:59 PM) or any 24-hour period that reasonably represents a calendar day for purposes of sampling.	Submit with monthly SMR
Weekly	Sunday following permit effective date or on permit effective date if on a Sunday	Sunday through Saturday	Submit with monthly SMR
Monthly	First day of calendar month following permit effective date or on permit effective date if that date is first day of the month	1st day of calendar month through last day of calendar month	By the 15th day of the third month after the month of sampling
Quarterly	Closest of January 1, April 1, July 1, or October 1 following (or on) permit effective date	January 1 through March 31 April 1 through June 30 July 1 through September 30 October 1 through December 31	June 15 September 15 December 15 March 15
Semiannually	Closest of January 1 or July 1 following (or on) permit effective date	January 1 through June 30 July 1 through December 31	September 15 March 15
Annually	January 1 following (or on) permit effective date	January 1 through December 31	April 15

4. **Reporting Protocols.** The Permittee shall report with each sample result the applicable Reporting Level (RL) and the current Method Detection Limit (MDL), as determined by the procedure in 40 C.F.R. Part 136.

   The Permittee shall report the results of analytical determinations for the presence of chemical constituents in a sample using the following reporting protocols:

   a. Sample results greater than or equal to the RL shall be reported as measured by the laboratory (i.e., the measured chemical concentration in the sample).

   b. Sample results less than the RL, but greater than or equal to the laboratory's MDL, shall be reported as "Detected, but Not Quantified," or DNQ. The estimated chemical concentration of the sample shall also be reported.

      For the purposes of data collection, the laboratory shall write the estimated chemical concentration next to DNQ. The laboratory may, if such information is available, include numerical estimates of the data quality for the reported result. Numerical estimates of data quality may be percent accuracy (± a percentage of the reported value), numerical ranges (low to high), or any other means considered appropriate by the laboratory.

   c. Sample results less than the laboratory's MDL shall be reported as "Not Detected," or ND.

REVISED TENTATIVE

d. Permittees are to instruct laboratories to establish calibration standards so that the ML value (or its equivalent if there is differential treatment of samples relative to calibration standards) is the lowest calibration standard. At no time is the Permittee to use analytical data derived from extrapolation beyond the lowest point of the calibration curve.

5. **Compliance Determination.** Compliance with effluent limitations for priority pollutants shall be determined using sample reporting protocols defined above and Attachment A. For purposes of reporting and administrative enforcement by the Regional Water Board and State Water Board, the Permittee shall be deemed out of compliance with effluent limitations if the concentration of the priority pollutant in the monitoring sample is greater than the effluent limitation and greater than or equal to the reporting level (RL).

6. **Multiple Sample Data.** When determining compliance with a measure of central tendency (arithmetic mean, geometric mean, median, etc.) of multiple sample analyses and the data set contains one or more reported determinations of DNQ or ND, the Permittee shall compute the median in place of the arithmetic mean in accordance with the following procedure:

   a. The data set shall be ranked from low to high, ranking the reported ND determinations lowest, DNQ determinations next, followed by quantified values (if any). The order of the individual ND or DNQ determinations is unimportant.

   b. The median value of the data set shall be determined. If the data set has an odd number of data points, then the median is the middle value. If the data set has an even number of data points, then the median is the average of the two values around the middle unless one or both of the points are ND or DNQ, in which case the median value shall be the lower of the two data points where DNQ is lower than a value and ND is lower than DNQ.

7. The Permittee shall submit SMRs in accordance with the following requirements:

   a. The Permittee shall arrange all reported data in a tabular format. The data shall be summarized to clearly illustrate whether the facility is operating in compliance with interim and/or final effluent limitations. The Permittee is not required to duplicate the submittal of data that is entered in a tabular format within CIWQS. When electronic submittal of data is required and CIWQS does not provide for entry into a tabular format within the system, the Permittee shall electronically submit the data in a tabular format as an attachment.

   b. The Permittee shall attach a cover letter to the SMR. The information contained in the cover letter shall clearly identify violations of the WDRs; discuss corrective actions taken or planned; and the proposed time schedule for corrective actions. Identified violations must include a description of the requirement that was violated and a description of the violation.

C. Discharge Monitoring Reports (DMRs)

The Permittee shall submit DMRs electronically via CIWQS.

D. Other Reports

1. The Permittee shall report the results of any special studies, chronic toxicity testing, TRE/TIE, Pollutant Minimization Program (PMP), and Pollution Prevention Plan required by

REVISED TENTATIVE

Special Provisions – section VI.C. The Permittee shall submit reports in compliance with SMR reporting requirements described in subsection X.B above.

2. **Annual Summary Report**

By April 15 of each year, the Permittee shall submit an annual report containing a discussion of the previous year's influent/effluent analytical results and receiving water monitoring data. The annual report shall contain an overview of any plans for upgrades to the treatment plant's collection system, the treatment processes, or the outfall system. The Permittee shall submit annual report to the Regional Water Board in accordance with the requirements described in subsection X.B.7 above.

Each annual monitoring report shall contain a separate section titled "Reasonable Potential Analysis" which discusses whether or not reasonable potential was triggered for pollutants which do not have a final effluent limitation in the NPDES permit. This section shall contain the following statement: "The analytical results for this sampling period did/ did not trigger reasonable potential." If reasonable potential was triggered, then the following information should also be provided:

a. A list of the pollutant(s) that triggered reasonable potential;

b. The Basin Plan or CTR criteria that was exceeded for each given pollutant;

c. The concentration of the pollutant(s);

d. The test method used to analyze the sample; and,

e. The date and time of sample collection.

3. The Permittee shall submit to the Regional Water Board, together with the first monitoring report required by this permit, a list of all chemicals and proprietary additives which could affect this waste discharge, including quantities of each. Any subsequent changes in types and/or quantities shall be reported promptly.

4. The Regional Water Board requires the Permittee to file with the Regional Water Board, within 90 days after the effective date of this Order, a technical report on preventive (failsafe) and contingency (cleanup) plans for controlling accidental discharges, and for minimizing the effect of such events. The technical report should:

a. Identify the possible sources of accidental loss, untreated waste bypass, and contaminated drainage. Loading and storage areas, power outage, waste treatment unit outage, and failure of process equipment, tanks, and pipes should be considered.

b. Evaluate the effectiveness of present facilities and procedures and state when they become operational.

c. Describe facilities and procedures needed for effective preventive and contingency plans.

d. Predict the effectiveness of the proposed facilities and procedures and provide an implementation schedule contingent interim and final dates when they will be constructed, implemented, or operational.

REVISED TENTATIVE

ATTACHMENT F – FACT SHEET

CONTENTS

I. Permit Information F-4
II. Facility Description F-5
A. Description of Wastewater and Biosolids Treatment and Controls F-5
B. Discharge Points and Receiving Waters F-7
C. Summary of Existing Requirements and Self-Monitoring Report (SMR) Data F-9
D. Compliance Summary F-20
E. Planned Changes F-21
III. Applicable Plans, Policies, and Regulations F-22
A. Legal Authorities F-22
B. California Environmental Quality Act (CEQA) F-22
C. State and Federal Laws, Regulations, Policies, and Plans F-22
D. Impaired Water Bodies on CWA 303(d) List F-27
E. Other Plans, Polices and Regulations F-27
IV. Rationale For Effluent Limitations and Discharge Specifications F-30
A. Discharge Prohibitions F-30
B. Technology-Based Effluent Limitations (TBELs) F-30
1. Scope and Authority F-30
2. Applicable Technology-Based Effluent Limitations F-31
C. Water Quality-Based Effluent Limitations (WQBELs) F-32
1. Scope and Authority F-32
2. Applicable Beneficial Uses and Water Quality Criteria and Objective F-32
3. Determining the Need for WQBELs F-54
4. WQBEL Calculations F-70
5. Whole Effluent Toxicity (WET) F-79
D. Final Effluent Limitation Considerations F-83
1. Anti-Backsliding Requirements F-83
2. Antidegradation F-84
3. Stringency of Requirements for Individual Pollutants F-85
E. Recycling Specifications F-91
1. Current Reclaimed Project for Irrigation & Industrial Use. F-91
2. Water Recycling Requirements for Groundwater Recharge. F-92
V. Rationale for Receiving Water Limitations F-92
A. Surface Water F-92
B. Groundwater F-92
VI. Rationale for Provisions F-92
A. Standard Provisions F-92
B. Special Provisions F-93
1. Reopener Provisions F-93
2. Special Studies and Additional Monitoring Requirements F-93
3. Best Management Practices and Pollution Prevention F-94
4. Construction, Operation, and Maintenance Specifications F-94
5. Special Provisions for Municipal Facilities (POTWs Only) F-94
6. Other Special Provisions -- Not Applicable F-95
7. Compliance Schedules -- Not Applicable F-95

REVISED TENTATIVE

VII. Rationale for Monitoring and Reporting Requirements F-95
A. Influent Monitoring F-95
B. Effluent Monitoring F-95
C. Whole Effluent Toxicity Testing Requirements F-97
D. Receiving Water Monitoring F-98
1. Surface Water F-98
2. Groundwater (Not Applicable) F-98
E. Other Monitoring Requirements F-98
1. Watershed Monitoring and Bioassessment Monitoring F-98
VIII. Nuisance and California Water Code Section 13241 Factors F-98
A. Need to prevent nuisance F-98
B. Past, present, and probable future beneficial uses of water F-99
C. Environmental characteristics F-99
D. Water quality conditions F-99
E. Economic considerations F-99
F. Need for developing housing within the region F-99
G. Need to develop and use recycled water F-100
IX. Public Participation F-100
A. Notification of Interested Parties F-100
B. Written Comments F-100
C. Public Hearing F-100
D. Reconsideration of Waste Discharge Requirements F-101
E. Information and Copying F-101
F. Register of Interested Persons F-101
G. Additional Information F-101

TABLES

Table F-1. Facility Information F-4
Table F-2. Historic Effluent Limitations and Monitoring Data at EFF 002 ..... F-9
Table F-3. Historic Effluent Limitations and Monitoring Data EFF-003 ..... F-14
Table F-4. Compliance History– Chronic Bioassay Toxicity for San Jose Creek East: F-20
(June 2009 – June 2013) F-20
Table F-5. Compliance History – Chronic Bioassay Toxicity for San Jose Creek West: F-20
(June 2009 – June 2013) F-20
Table F-7. Basin Plan Beneficial Uses – Ground Waters F-24
Table F-8. Summary of TBELS F-31
Table F-9. Translated Ammonia Effluent Limitations with SSO Applied for San Jose Creek (Discharge Point No.002) from San Jose Creek East Facility F-41
Table F-10. Translated Ammonia Effluent Limitations with SSO Applied for San Gabriel River (Discharge Point No. 003) from San Jose Creek West Facility F-44
Table F-11. Translated Ammonia Effluent Limitations for Discharge Points Nos. 004 and 005 in San Gabriel Reach 4 and Reach 5 ..... F-45
Table F-12. Translated Ammonia Effluent Limitations with SSO Applied for Combined Effluent Outfall (Discharge Point Nos. 001A and 001B) in San Gabriel Reach 2 ..... F-49
Table F-13. Translated Ammonia Effluent Limitations with SSO Applied for Combined Effluent Outfall (Discharge Point No. 001) in San Gabriel Reach 2 with Reach 1 Requirements Applied F-50
Table F-14. Summary of all Ammonia Nitrogen Effluent Limitations F-51
Table F-15. Summary of Reasonable Potential Analysis for CTR Based Priority Pollutants at EFF-002F-58

REVISED TENTATIVE

Table F-16. Summary of Reasonable Potential Analysis for CTR Based Priority Pollutants at EFF-003F-63
Table F-17. Summary of Further Reasonable Potential Analysis for CTR Based Priority Pollutants at EFF-001 F-68
Table F-18. Summary of Further Reasonable Potential Analysis for CTR Based Priority Pollutants at EFF-001A and EFF-001B F-69
Table F-19. Summary of Further Reasonable Potential Analysis for CTR Based Priority Pollutants at Proposed Discharge Points Nos. EFF-004 and EFF-005 ..... F-70
Table F-20. Summary of Water Quality Based Effluent Limits at EFF-001, EFF-001A and EFF-001B .. F-74
Table F-21. Summary of Water Quality Based Effluent Limits at EFF-002 ..... F-76
Table F-22. Summary of Water Quality Based Effluent Limits at EFF-003, EFF-004, and EFF-005 .. F-77
Table F-23. Summary of Final Effluent Limitations for Discharge Point EFF-001, EFF-001A and EFF-001B F-86
Table F-24. Summary of Final Effluent Limitations for Discharge Point EFF-002, ... F-88
Table F-25. Summary of Final Effluent Limitations for Discharge Point EFF-003, EFF-004, and EFF-005 F-89
Table F-26. Effluent Monitoring Frequency Comparison F-96

REVISED TENTATIVE

ATTACHMENT F – FACT SHEET

As described in section II.B of this Order, the Regional Water Board incorporates this Fact Sheet as findings of the Regional Water Board supporting the issuance of this Order. This Fact Sheet includes the legal requirements and technical rationale that serve as the basis for the requirements of this Order.

This Order has been prepared under a standardized format to accommodate a broad range of discharge requirements for Permittees in California. Only those sections or subsections of this Order that are specifically identified as "not applicable" have been determined not to apply to this Permittee. Sections or subsections of this Order not specifically identified as "not applicable" are fully applicable to this Permittee.

REVISED TENTATIVE

I. PERMIT INFORMATION

The following table summarizes administrative information related to the facility.

Table F-1. Facility Information

WDID	4B190107020
Permittee	Joint Outfall System
Name of Facility	San Jose Creek Water Reclamation Plant
Facility Address	1965 South Workman Mill Road
	Whittier, CA 90601
	Los Angeles County
Facility Contact, Title and Phone	Ann Heil, Supervising Engineer, (562) 908-4288 Ext. 2803
Authorized Person to Sign and Submit Reports	Ann Heil, Supervising Engineer, (562) 908-4288 Ext. 2803
Mailing Address	1955 Workman Mill Road, Whittier, CA 90601
Billing Address	Same as above
Type of Facility	Publicly Owned Treatment Works (POTW)
Major or Minor Facility	Major
Threat to Water Quality	1
Complexity	A
Pretreatment Program	Y
Recycling Requirements	Producer
Facility Permitted Flow	100 million gallons per day
Facility Design Flow	100 million gallons per day (62.5 East and 37.5 West)
Watershed	San Gabriel River Watershed
Receiving Water	San Gabriel River and San Jose Creek
Receiving Water Type	Inland surface water

A. The Joint Outfall System (ownership and operation of the Joint Outfall System is proportionally shared among the signatory parties to the amended Joint Outfall Agreement effective July 1, 1995, which parties include County Sanitation Districts of Los Angeles County Nos. 1, 2, 3, 5, 8, 15, 16, 17, 18, 19, 21, 22, 23, 28, 29, and 34, and South Bay Cities Sanitation District of Los Angeles County), formerly referred to as the County Sanitation Districts of Los Angeles County and hereinafter Permittee or Districts, is the owner and operator of the San Jose Creek Water Reclamation Facility,[1] a Publicly-Owned Treatment Works. For the purposes of this Order, references to the "discharger" or "permittee" in applicable federal and state laws, regulations, plans, or policy are held to be equivalent to references to the Permittee herein.

B. The Facility discharges wastewater to San Gabriel River and San Jose Creek, waters of the United States, and was previously regulated by Order No. R4-2009-0078, which was adopted on June 4, 2009 and expired on May 10, 2014. The terms and conditions of the previous NPDES order were automatically continued and remained in effect until new WDRs and NPDES permit were adopted pursuant to this Order. Attachment B provides maps of the area around the Facility. Attachments C provides flow schematics of the Facility.

Prior to making any change in the point of discharge, place of use, or purpose of use of treated wastewater that results in a decrease of flow in any portion of a watercourse, the Permittee must file a petition with the State Water Board, Division of Water Rights, and receive approval for such a change. The State Water Board retains the jurisdictional authority to enforce such requirements under Water Code section 1211.

C. The Permittee filed a report of waste discharge (ROWD) and submitted an application for reissuance of its Waste Discharge Requirements (WDRs) and NPDES permit on November 5, 2013. Supplemental information was requested on December 5, 2013, and received on January 29, 2014. A further revision to the ROWD was received on July 10, 2014. The revision requested the addition of two Discharge Points Nos. 004 and 005 to the San Gabriel River Reach 3 to provide advanced treated water to the San Gabriel Indirect Reused Replenishment Project proposed for construction in 2015. A site visit was conducted on January 8, 2015 to observe operations and collect additional data to confirm permit limitations and conditions. The application was deemed complete on May 20, 2014, so the NPDES permit was administratively extended.

II. FACILITY DESCRIPTION

A. Description of Wastewater and Biosolids Treatment and Controls

1. The Permittee owns and operates the San Jose Creek WRP, a tertiary wastewater treatment plant located at 1965 South Workman Mill Road, Whittier, California. Attachment B-2 shows the location of the Facility. The San Jose Creek WRP currently receives wastewater from the Cities of Arcadia, Azusa, Baldwin Park, Bradbury, Industry, Covina, Diamond Bar, Duarte, El Monte, Glendora, Irwindale, La Puente, La Verne, Monrovia, Pasadena, Pomona, Rosemead, San Dimas, San Gabriel, San Marino, Sierra Madre, Temple City, Walnut, West Covina, as well as some unincorporated areas. The wastewater is a mixture of domestic and industrial wastewater that is pre-treated pursuant

[1] The San Jose Creek Water Reclamation Plant (San Jose Creek WRP) consists of East and West Water Reclamation Plants, which have two independently operated units. As reported in the ROWD, the Plant has a combined design capacity of 100 million gallons per day (mgd), of which San Jose Creek East and West WRPs have individual design capacities of 62.5 MGD and 37.5 MGD respectively.

REVISED TENTATIVE

to 40 CFR Part 403. San Jose Creek WRP, including the East and West plants, has a design capacity of 100 mgd and serves an estimated population of 992,000 people.

The San Jose Creek WRP is part of integrated network of facilities, known as the Joint Outfall System (JOS). The JOS incorporates the San Jose Creek WRP and six other wastewater treatment plants, which are connected by more than 1,200 miles of interceptors and trunk sewers. The upstream treatment plants (Whittier Narrows, Pomona, La Cañada, Long Beach, Los Coyotes, and San Jose Creek) are connected to the Joint Water Pollution Control Plant (JWPCP) located in Carson. This system allows for the diversion of influent flows into or around each upstream plant.

2. Sections of the San Gabriel River and San Jose Creek, near the San Jose Creek WRP discharge points, are designated with the beneficial use of groundwater recharge (GWR). Surface water from the San Gabriel River and San Jose Creek enters the Main San Gabriel Valley, the Central Los Angeles Coastal Plain, and the San Gabriel Valley and Puente Groundwater Basins. Since ground water from these basins is used to provide drinking water to over one million people, Title 22-based limits are needed to protect the drinking water supply where there is a reasonable potential for the contaminant to be present in the discharge at concentrations which exceed drinking water criteria. By limiting the contaminants in the San Jose Creek WRP discharges, the amount of pollutants entering the groundwater basins are correspondingly reduced.

3. The Districts have undertaken a full evaluation of local limits for the JOS, which is an interconnected system consisting of the Long Beach, Los Coyotes, Pomona, San Jose Creek and Whittier Narrows WRPs, as well as JWPCP, and La Canada WRP (non-industrial). Due to the interconnectedness of this system, it is appropriate to formally evaluate local limits for all treatment plants on the system at one time so that conditions throughout the system can be considered. The Districts have reviewed the discharge limitations in the NPDES permits issued to these facilities and have found that changes to existing local limits are not necessary to meet the limitations. The most recent local limits evaluation was submitted on August 22, 2012, finding that the existing limits were fully protective of the JOS system. However, a re-evaluation will be required following the renewal of the NPDES permit issued to JWPCP.

4. Treatment at the Facility consists of primary sedimentation, activated sludge biological treatment with nitrification-denitrification (NDN) secondary sedimentation with coagulation, inert media filtration, sequential chlorination, and dechlorination.

5. Gaseous chlorine is used as a disinfectant at the Facility. The disinfecting agent is added to the treated effluent prior to the filters to destroy bacteria, pathogens and viruses, and to minimize algal growth in the filters. Additional disinfectant may be dosed prior to the serpentine chlorine contact chamber. Prior to discharge, sulfur dioxide is added to the treated effluent to remove residual chlorine. Also, at this point, is a backup dechlorination system that uses sodium bisulfite. Treated wastewater discharged to San Gabriel River and San Jose Creek is dechlorinated. The existing chlorine and sulfur dioxide disinfection, chlorination and dechlorination are expected to be replaced with sodium hypochlorite and sodium bisulfite facilities to reduce health and safety risks to the public.

6. The Permittee constructed a biological nutrient removal system with nitrogen de-nitrification process (NDN) in order to achieve compliance with the ammonia Basin Plan objectives. The system was completed and has been in operation since June 2003.

REVISED TENTATIVE

7. No facilities are provided for solids processing at the plant. Sewage solids separated from the wastewater are returned to the trunk sewer for conveyance to JWPCP for treatment and disposal occurs, under Order No. R4-2011-0151 (NPDES No. CA0053813. Attachments C1 and C2 are schematics of the San Jose Creek WRP wastewater flow.)

B. Discharge Points and Receiving Waters

The Facility discharges tertiary-treated wastewater via four Discharge Point Nos. (001, 001A, 001B, and 003) to the San Gabriel River, above the Estuary (Figure B-1). Tertiary-treated effluent is also discharged via one discharge point (No. 002) to San Jose Creek, a tributary of the San Gabriel River (Figure B-2). Two new Discharge Points Nos. 004 and 005 are also proposed for discharge into the San Gabriel River upstream from the Facility in the vicinity of the Santa Fe dam. All of the receiving waters are located within the San Gabriel River Watershed and are shown on Figure B-3. Existing and proposed points of discharge are as follows:

Discharge Point No. 001: Existing discharge to San Gabriel River from both the East and West San Jose Creek WRPs (approximate coordinates: Latitude 33.93056 N and Longitude - 118.107778 W). Discharge Point No. 001 is the primary discharge point and is located approximately eight miles south of the plant, north of Firestone Boulevard. From this point, treated effluent flows directly into a lined, low flow channel (San Gabriel River) and travels about 9 miles prior to reaching the estuary. It is located in Reach 2 of the San Gabriel River as defined in the Basin Plan, approximately 940 feet upstream of the division between Reach 1 and Reach 2. However, the *Total Maximum Daily Load for Metals and Selenium in the San Gabriel River (SGR Metals TMDL)* considers Discharge Point No. 001 to be in Reach 1 of the San Gabriel River. For the purposes of this Order, Discharge Point No. 001 is considered to lie in Reach 1. TMDL implementation guidance makes this assumption, a concrete apron at the outfall in Reach 2 ensures all discharge is to Reach 1, and water quality objectives and beneficial uses are judged to be fully protected at and downstream from the outfall into Reach 1.

The same outfall pipe also delivers reclaimed water for groundwater recharge under a separate permit. The turnout used to divert reclaimed water to the San Gabriel River Spreading Grounds is located next to Discharge Point No. 001A about half way between the treatment plants and Discharge Point No. 001. This turnout is not a NPDES Discharge Point and water quality is not measured by the Permittee at the turnout.

Attachment B-3 shows the following discharge points.

Discharge Point No. 001A Existing discharge to San Gabriel River from both the East and West San Jose Creek WRPs (approximate coordinates; Latitude 33.994167 N and Longitude -118.073333 W). Treated effluent from Discharge Point No. 001A is allowed to recharge groundwater underneath the unlined San Gabriel River, when the headworks of the spreading grounds are unavailable due to maintenance or other constraints. It is located in Reach 2 of the San Gabriel River.

Discharge Point No. 001B Existing discharge to San Gabriel River from both the East and West San Jose Creek WRPs (approximate coordinates: Latitude 33.969723 N and Longitude -118.088612 W). Treated effluent from Discharge Point No.001B increases the groundwater recharge in the vicinity through the unlined San Gabriel River. Discharge Point No.001B (nearby Rubber Dam No. 4) is located at the San Gabriel River bank, approximately 1475 feet upstream of Slauson Avenue. It can discharge into Reach 2 of the San Gabriel River, but did not operate between January 1, 2009 and September 30, 2013.

REVISED TENTATIVE

Discharge Point No. 002: Existing discharge to San Jose Creek from the San Jose Creek East WRP (approximate coordinates: Latitude 34.035458 N and Longitude -118.021054W). Treated effluent from Discharge Point No. 002 is allowed to recharge groundwater and is conveyed via various channels, the San Gabriel River and diversion structures to either the Rio Hondo Spreading Grounds or the San Gabriel River Spreading Grounds. San Jose Creek is unlined from the discharge point to the San Gabriel River.

Discharge Point No. 003: Existing discharge to the unlined San Gabriel River from the San Jose Creek West WRP (approximate coordinates: Latitude 34.036076 N and Longitude -118.030765 W). Treated effluent from Discharge No. 003 is allowed to recharge groundwater and is conveyed via various channels and diversion structures to either the Rio Hondo Spreading Grounds or the San Gabriel River Spreading Grounds. It is located in Reach 3 of the San Gabriel River.

Discharge Point Nos. 003 and 002 may contribute flow to the Zone 1 ditch which connects the San Gabriel River to Whittier Narrows Dam and the Rio Hondo spreading grounds. The facility has the ability to divert flow to EFF-004 and EFF-005.

Discharge Point No. 004: Proposed new discharge to the unlined Reach 4 of the San Gabriel River below Santa Fe Dam from the San Jose Creek West WRP(approximate coordinates: Latitude 34.111125 N and Longitude -117.971036 W). Detailed information on this outfall will be included in the Title 22 Engineering Report and Water Recycling Requirements (WRR) to be prepared for the Upper San Gabriel Valley Municipal Water District Indirect Reuse and Replenishment Project (IRRP). Before the SGR Metals TMDL was issued in 2007, Discharge Point Nos. 004 and 005 were in Reach 3 of the San Gabriel River. References in regulatory documents to Reach 3, including TMDLs which precede that modification, will continue to apply.

Discharge Point No. 005: Proposed new discharge to the unlined Reach 5 of the San Gabriel River above Santa Fe Dam from the San Jose Creek West WRP (approximate coordinates: Latitude 34.131603 N and Longitude -117.950228). Detailed information on this outfall will be included in the Title 22 Engineering Report and WRR to be prepared for the IRRP.

During dry weather (May 1 – October 31), the primary sources of water flow in San Gabriel River, downstream of the discharge outfalls, are the San Jose Creek WRP effluent and other NPDES-permitted discharges, including urban runoff conveyed through the municipal separate storm sewer systems (MS4). Storm water and dry weather urban runoff from MS4 are regulated under an NPDES permit, Waste Discharge Requirements for Municipal Storm Water and Urban Runoff Discharges within the County of Los Angeles (LA Municipal Permit), NPDES Permit No. CAS004001.

The Los Angeles County Flood Control District channelized portions of the San Gabriel River to convey and control floodwater and to prevent damage to homes located adjacent to the river. Although this is not the main purpose, the San Gabriel River conveys treated wastewater along with floodwater and urban runoff.

The San Gabriel River and San Jose Creek are unlined near the points of discharge, except at Discharge Point No. 001. Groundwater recharge occurs, both incidentally and through separate WRRs, in these unlined areas of the San Gabriel River where the underlying sediments are highly transmissive to water and pollutants. The Water Replenishment District of Southern California recharges the Rio Hondo and San Gabriel Spreading Grounds, located in the Montebello Forebay, with water purchased from JOS's Whittier Narrows, Pomona, and

REVISED TENTATIVE

San Jose Creek WRPs, under WRRs Order No. 91-100, adopted by the Board on September 9, 1991. The depth to groundwater is approximately 50 feet below ground surface in the vicinity of the receiving water, San Jose Creek and San Gabriel River, and near Discharge Point Nos.002 and 003. Figure B-4 shows the depth to groundwater near San Jose Creek WRP.

Notwithstanding that segments located further downstream of the discharge are concrete-lined, the watershed supports a diversity of wildlife, particularly an abundance of avian species such as the Least Bell's Vireo, Tricolored Blackbird, and California Gnatcatcher. Aquatic life, such as fish, invertebrates, and algae also exist in the San Gabriel River Watershed.

C. Summary of Existing Requirements and Self-Monitoring Report (SMR) Data

The effluent at Discharge Points Nos. 001, 001A, 001B comes from the same pipeline, which may contain different proportions of waste treated at San Jose Creek East and San Jose Creek West Facilities. The effluent at Discharge Points Nos. 004 and 005 contains waste treated at the San Jose Creek West Facility and is transported via a separate pipeline. Because the water quality at these outfalls is calculated from effluent discharged at Discharge Points Nos. 002 and 003, existing requirements and self-monitoring results are provided for only EFF-002 and EFF-003.

Where multiple samples are not collected in a month or where the number of samples in a month varies, the highest measured concentration may be used as both the highest average monthly discharge and the highest daily discharge.

Effluent limitations contained in the existing Order for discharges from Discharge Point No. 002 (Monitoring Location EFF-002) and representative monitoring data from the term of the previous Order, as reported by the Permittee in the ROWD, are as follows:

Table F-2. Historic Effluent Limitations and Monitoring Data at EFF 002

Parameter	Units	Effluent Limitation			Monitoring Data (From June 2009 To Sept. 2013)		
		Average Monthly	Average Weekly	Maximum Daily	Highest Average Monthly Discharge	Highest Average Weekly Discharge	Highest Daily Discharge
$BOD_5 20^oC$	mg/L	20	30	45	3.9	--	3.9
Total Suspended Solids (TSS)	mg/L	15	40	45	3.0	--	3.0
Oil and Grease	mg/L	10	--	15	<5.2	--	<5.2
Settleable Solids	ml/L	0.1	--	0.3	<0.1	--	<0.1
Residual Chlorine	mg/L	--	--	0.1	--	--	0.1
Total Dissolved Solids	mg/L	750	--	--	736	--	736
MBAS	mg/L	0.5	--	--	<0.1	--	<0.1
Chloride	mg/L	180	--	--	162	--	162
Sulfate	mg/L	300	--	--	172	--	172
Boron	mg/L	1	--	--	0.6	--	0.6
Fluoride	mg/L	1.6	--	--	0.9	--	0.9
Nitrite-N (as N)	mg/L	1	--	--	0.62	--	0.62

REVISED TENTATIVE

Parameter	Units	Effluent Limitation			Monitoring Data (From June 2009 To Sept. 2013)		
		Average Monthly	Average Weekly	Maximum Daily	Highest Average Monthly Discharge	Highest Average Weekly Discharge	Highest Daily Discharge
Nitrate plus Nitrite as Nitrogen	mg/L	8	--	--	6.25	--	6.25
Total Ammonia	mg/L	BP Table	--	BP Table	4.48	--	4.48
Antimony	µg/L	--	--	--	0.8	--	0.8
Arsenic	µg/L	--	--	--	0.7	--	0.7
Beryllium	µg/L	--	--	--	1.9	--	1.9
Cadmium	µg/L	--	--	--	<0.25	--	<0.25
Chromium III	µg/L	--	--	--	0.26	--	0.26
Chromium VI	µg/L	--	--	--	1.63	--	1.63
Copper	µg/L	--	--		0.13	--	0.13
Lead	µg/L	5.9	--	19	6.57	--	6.57
Mercury	µg/L	--	--	--	6.57	--	6.57
Nickel	µg/L	--	--	--	0.79	--	0.79
Selenium	µg/L	4.4	--	7.1	0.0029	--	0.0029
Silver	µg/L	--	--	--	10.6	--	10.6
Thallium	µg/L	--	--	--	<5	--	<5
Zinc	µg/L	--	--	--	<0.1	--	<0.1
Cyanide	µg/L	--	--	--	<0.25	--	<0.25
Asbestos	µg/L	--	--	--	77.8	--	77.8
2,3,7,8-TCDD (Dioxin)	µg/L	--	--	--	<12E-6	--	<12E-6
Acrolein	µg/L	--	--	--	0.51	--	0.51
Acrylonitrile	µg/L	--	--	--	<12	--	<12
Benzene	µg/L	--	--	--	1	--	1
Bromoform	µg/L	--	--	--	<2	--	<2
Carbon Tetrachloride	µg/L	--	--	--	<0.5	--	<0.5
Chlorobenzene	µg/L	--	--	--	1.6	--	1.6
Dibromochloromethane	µg/L	--	--	--	<0.25	--	<0.25
Chloroethane	µg/L	--	--	--	<0.5	--	<0.5
2-chloroethyl vinyl ether	µg/L	--	--	--	9.8	--	9.8

REVISED TENTATIVE

Parameter	Units	Effluent Limitation			Monitoring Data (From June 2009 To Sept. 2013)		
		Average Monthly	Average Weekly	Maximum Daily	Highest Average Monthly Discharge	Highest Average Weekly Discharge	Highest Daily Discharge
Chloroform	µg/L	--	--	--	<0.5	--	<0.5
Dichlorobromomethane	µg/L	--	--	--	<0.5	--	<0.5
1,1-dichloroethane	µg/L	--	--	--	37.2	--	37.2
1,2-dichloroethane	µg/L	--	--	--	26.4	--	26.4
1,1-dichloroethylene	µg/L	--	--	--	<0.5	--	<0.5
1,2-dichloropropane	µg/L	--	--	--	<0.5	--	<0.5
1,3-dichloropropylene	µg/L	--	--	--	<0.5	--	<0.5
Ethylbenzene	µg/L	--	--	--	<0.5	--	<0.5
Methyl bromide	µg/L	--	--	--	<0.5	--	<0.5
Methyl chloride	µg/L	--	--	--	<0.5	--	<0.5
Methylene chloride	µg/L	--	--	--	<0.5	--	<0.5
1,1,2,2-tetrachloroethane	µg/L	--	--	--	<0.25	--	<0.25
Tetrachloroethylene	µg/L	--	--	--	0.35	--	0.35
Toluene	µg/L	--	--	--	<0.5	--	<0.5
Trans 1,2-Dichloroethylene	µg/L	--	--	--	<0.5	--	<0.5
1,1,1-Trichloroethane	µg/L	--	--	--	<0.5	--	<0.5
1,1,2-Trichloroethane	µg/L	--	--	--	<0.5	--	<0.5
Trichloroethylene	µg/L	--	--	--	<0.5	--	<0.5
Vinyl Chloride	µg/L	--	--	--	<0.5	--	<0.5
2-chlorophenol	µg/L	--	--	--	<0.5	--	<0.5
2,4-dichlorophenol	µg/L	--	--	--	<0.5	--	<0.5
2,4-dimethylphenol	µg/L	--	--	--	<0.5	--	<0.5
4,6-dinitro-o-resol (2-methyl-4,6-Dinitrophenol)	µg/L	--	--	--	<0.5	--	<0.5
2,4-dinitrophenol	µg/L	--	--	--	<2	--	<2
2-nitrophenol	µg/L	--	--	--	<0.5	--	<0.5
4-nitrophenol	µg/L	--	--	--	<0.5	--	<0.5
3-Methyl-4-Chlorophenol (P-chloro-m-resol)	µg/L	--	--	--	<10	--	<10

REVISED TENTATIVE

Parameter	Units	Effluent Limitation			Monitoring Data (From June 2009 To Sept. 2013)		
		Average Monthly	Average Weekly	Maximum Daily	Highest Average Monthly Discharge	Highest Average Weekly Discharge	Highest Daily Discharge
Pentachlorophenol	µg/L	--	--	--	<10	--	<10
Phenol	µg/L	--	--	--	<1	--	<1
2,4,6-trichlorophenol	µg/L	--	--	--	<1	--	<1
Acenaphthene	µg/L	--	--	--	3.7	--	3.7
Acenaphthylene	µg/L	--	--	--	<10	--	<10
Anthracene	µg/L	--	--	--	<1	--	<1
Benzidine	µg/L	--	--	--	<10	--	<10
Benzo(a)Anthracene	µg/L	--	--	--	<10	--	<10
Benzo(a)Pyrene	µg/L	--	--	--	<0.02	--	<0.02
Benzo(b)Fluoranthene	µg/L	--	--	--	<5	--	<5
Benzo(ghi)Perylene	µg/L	--	--	--	<0.02	--	<0.02
Benzo(k)Fluoranthene	µg/L	--	--	--	0.01	--	0.01
Bis(2-Chloroethoxy) methane	µg/L	--	--	--	<5	--	<5
Bis(2-Chloroethyl)Ether	µg/L	--	--	--	0.014	--	0.014
Bis(2-Chloroisopropyl) Ether	µg/L	--	--	--	<5	--	<5
Bis(2-Ethylhexyl)Phthalate	µg/L	--	--	--	<1	--	<1
4-Bromophenyl Phenyl Ether	µg/L	--	--	--	<2	--	<2
Butylbenzyl Phthalate	µg/L	--	--	--	<2	--	<2
2-Chloronaphthalene	µg/L	--	--	--	<5	--	<5
4-Chlorophenyl Phenyl Ether	µg/L	--	--	--	<10	--	<10
Chrysene	µg/L	--	--	--	<10	--	<10
Dibenzo(a,h)Anthracene	µg/L	--	--	--	<5	--	<5
1,2-Dichlorobenzene	µg/L	--	--	--	<0.02	--	<0.02
1,3-Dichlorobenzene	µg/L	--	--	--	0.03	--	0.03
1,4-Dichlorobenzene	µg/L	--	--	--	<0.5	--	<0.5
3-3'-Dichlorobenzidine	µg/L	--	--	--	<0.5	--	<0.5

REVISED TENTATIVE

Parameter	Units	Effluent Limitation			Monitoring Data (From June 2009 To Sept. 2013)		
		Average Monthly	Average Weekly	Maximum Daily	Highest Average Monthly Discharge	Highest Average Weekly Discharge	Highest Daily Discharge
Diethyl Phthalate	µg/L	--	--	--	0.3	--	0.3
Dimethyl Phthalate	µg/L	--	--	--	<5	--	<5
Di-n-Butyl Phthalate	µg/L	--	--	--	1	--	1
2-4-Dinitrotoluene	µg/L	--	--	--	<2	--	<2
2-6-Dinitrotoluene	µg/L	--	--	--	<10	--	<10
Di-n-Octyl Phthalate	µg/L	--	--	--	<5	--	<5
1,2-Diphenylhydrazine	µg/L	--	--	--	<5	--	<5
Fluoranthene	µg/L	--	--	--	<10	--	<10
Fluorene	µg/L	--	--	--	<1	--	<1
Hexachlorobenzene	µg/L	--	--	--	<1	--	<1
Hexachlorobutadiene	µg/L	--	--	--	<10	--	<10
Hexachlorocyclopentadiene	µg/L	--	--	--	<1	--	<1
Hexachloroethane	µg/L	--	--	--	<1	--	<1
Indeno(1,2,3-cd)Pyrene	µg/L	--	--	--	<5	--	<5
Isophorone	µg/L	--	--	--	<1	--	<1
Naphthalene	µg/L	--	--	--	0.026	--	0.026
Nitrobenzene	µg/L	--	--	--	<1	--	<1
N-Nitrosodimethylamine	µg/L	--	--	--	<1	--	<1
N-Nitrosodi-n-Propylamine	µg/L	--	--	--	<1	--	<1
N-Nitrosodiphenylamine	µg/L	--	--	--	0.36	--	0.36
Phenanthrene	µg/L	--	--	--	<5	--	<5
Pyrene	µg/L	--	--	--	<1	--	<1
1,2,4-Trichlorobenzene	µg/L	--	--	--	<5	--	<5
Aldrin	µg/L	--	--	--	<10	--	<10
Alpha-BHC	µg/L	--	--	--	<5	--	<5
Beta-BHC	µg/L	--	--	--	<0.01	--	<0.01
Gamma-BHC (Lindane)	µg/L	--	--	--	<0.01	--	<0.01
delta-BHC	µg/L	--	--	--	<0.01	--	<0.01
Chlordane	µg/L	--	--	--	<0.01	--	<0.01

REVISED TENTATIVE

Parameter	Units	Effluent Limitation			Monitoring Data (From June 2009 To Sept. 2013)		
		Average Monthly	Average Weekly	Maximum Daily	Highest Average Monthly Discharge	Highest Average Weekly Discharge	Highest Daily Discharge
4,4'-DDT	µg/L	--	--	--	<0.01	--	<0.01
4,4'-DDE	µg/L	--	--	--	<0.05	--	<0.05
4,4'-DDD	µg/L	--	--	--	<0.01	--	<0.01
Dieldrin	µg/L	--	--	--	<0.01	--	<0.01
Alpha-Endosulfan	µg/L	--	--	--	<0.01	--	<0.01
Beta-Endosulfan	µg/L	--	--	--	<0.01	--	<0.01
Endosulfan Sulfate	µg/L	--	--	--	<0.01	--	<0.01
Endrin	µg/L	--	--	--	<0.01	--	<0.01
Endrin Aldehyde	µg/L	--	--	--	<0.01	--	<0.01
Heptachlor	µg/L	--	--	--	<0.01	--	<0.01
Heptachlor Epoxide	µg/L	--	--	--	<0.01	--	<0.01
PCB 1016	µg/L	--	--	--	<0.01	--	<0.01
PCB 1221	µg/L	--	--	--	<0.01	--	<0.01
PCB 1232	µg/L	--	--	--	<0.1	--	<0.1
PCB 1242	µg/L	--	--	--	<0.1	--	<0.1
PCB 1248	µg/L	--	--	--	<0.5	--	<0.5
PCB 1254	µg/L	--	--	--	<0.3	--	<0.3
PCB 1260	µg/L	--	--	--	<0.1	--	<0.1
Toxaphene	µg/L	--	--	--	<0.1	--	<0.1
Barium	µg/L	--	--	--	83	--	83
Iron	µg/L	--	--	--	87	--	87

REVISED TENTATIVE

1. Effluent limitations contained in the existing Order for discharges from Discharge Point No. 003 (Monitoring Location EFF-003) and representative monitoring data from the term of the previous Order, as reported by the Permittee in the ROWD, are as follows:

Table F-3. Historic Effluent Limitations and Monitoring Data EFF-003

Parameter	Units	Effluent Limitation			Monitoring Data (From June 2009 To Sept. 2013)		
		Average Monthly	Average Weekly	Maximum Daily	Highest Average Monthly Discharge	Highest Average Weekly Discharge	Highest Daily Discharge
$BOD_5 20^oC$	mg/L	20	30	45	5	--	5

Parameter	Units	Effluent Limitation			Monitoring Data (From June 2009 To Sept. 2013)		
		Average Monthly	Average Weekly	Maximum Daily	Highest Average Monthly Discharge	Highest Average Weekly Discharge	Highest Daily Discharge
Total Suspended Solids (TSS)	mg/L	15	40	45	8.8	--	8.8
Oil and Grease	mg/L	10	--	15	5.9	--	5.9
Settleable Solids	ml/L	0.1	--	0.3	<0.1	--	<0.1
Residual Chlorine	mg/L		--	0.1		--	0.1
Total Dissolved Solids	mg/L	750	--	--	660	--	660
MBAS	mg/L	0.5	--	--	<0.1	--	<0.1
Chloride	mg/L	180			142	--	142
Sulfate	mg/L	300	--	--	134	--	134
Boron	mg/L	1	--	--	0.4	--	0.4
Fluoride	mg/L	1.6	--	--	0.87	--	0.87
Nitrite-N (as N)	mg/L	1	--	1	0.193	--	0.193
Nitrate plus Nitrite as Nitrogen	mg/L	8	--	8	8.65	--	8.8
Total Ammonia	mg/L	BP Table	--	BP Table	2.5	--	2.5
Antimony	µg/L	--	--	--	0.78	--	0.78
Arsenic	µg/L	--	--	--	1.4	--	1.4
Beryllium	µg/L	--	--	--	<0.25	--	<0.25
Cadmium	µg/L	--	--	--	0.43	--	0.43
Chromium III	µg/L	--	--	--	1.56	--	1.56
Chromium VI	µg/L	--	--	--	0.24	--	0.24
Copper	µg/L	--	--	--	9.08	--	9.08
Lead	µg/L	--	--	--	9.08	--	9.08
Mercury	µg/L	--	--	--	0.36	--	0.36
Nickel	µg/L	--	--	--	0.0036	--	0.0036
Selenium	µg/L	--	--	--	4.19	--	4.19
Silver	µg/L	--	--	--	0.67	--	0.67
Thallium	µg/L	--	--	--	0.1	--	0.1
Zinc	µg/L	--	--	--	<0.25	--	<0.25
Cyanide[36]	µg/L	--	--	--	64.3	--	64.3
Asbestos	µg/L	--	--	--	2.5	--	2.5
2,3,7,8-TCDD (Dioxin)	µg/L	--	--	--	<11E-6	--	<11E-6

REVISED TENTATIVE

Parameter	Units	Effluent Limitation			Monitoring Data (From June 2009 To Sept. 2013)		
		Average Monthly	Average Weekly	Maximum Daily	Highest Average Monthly Discharge	Highest Average Weekly Discharge	Highest Daily Discharge
Acrolein	µg/L	--	--	--	<13	--	<13
Acrylonitrile	µg/L	--	--	--	1	--	1
Benzene	µg/L	--	--	--	<2	--	<2
Bromoform	µg/L	--	--	--	<0.5	--	<0.5
Carbon Tetrachloride	µg/L	--	--	--	0.66	--	0.66
Chlorobenzene	µg/L	--	--	--	<0.5	--	<0.5
Dibromochloromethane	µg/L	--	--	--	<.5	--	<0.5
Chloroethane	µg/L	--	--	--	7.7	--	7.7
2-chloroethyl vinyl ether	µg/L	--	--	--	<0.5	--	<0.5
Chloroform	µg/L	--	--	--	<0.5	--	<0.5
Dichlorobromomethane	µg/L	--	--	--	63.2	--	63.2
1,1-dichloroethane	µg/L	--	--	--	24.4	--	24.4
1,2-dichloroethane	µg/L	--	--	--	<0.5	--	<0.5
1,1-dichloroethylene	µg/L	--	--	--	<0.5	--	<0.5
1,2-dichloropropane	µg/L	--	--	--	<0.5	--	<0.5
1,3-dichloropropylene	µg/L	--	--	--	<0.5	--	<0.5
Ethylbenzene	µg/L	--	--	--	<0.5	--	<0.5
Methyl bromide	µg/L	--	--	--	<0.5	--	<0.5
Methyl chloride	µg/L	--	--	--	<0.5	--	<0.5
Methylene chloride	µg/L	--	--	--	0.22	--	0.22
1,1,2,2-tetrachloroethane	µg/L	--	--	--	0.93	--	0.93
Tetrachloroethylene	µg/L	--	--	--	<0.5	--	<0.5
Toluene	µg/L	--	--	--	0.43	--	0.43
Trans 1,2-Dichloroethylene	µg/L	--	--	--	0.25	--	0.25
1,1,1-Trichloroethane	µg/L	--	--	--	<0.5	--	<0.5
1,1,2-Trichloroethane	µg/L	--	--	--	<0.5	--	<0.5
Trichloroethylene	µg/L	--	--	--	<0.5	--	<0.5
Vinyl Chloride	µg/L	--	--	--	<0.5	--	<0.5
2-chlorophenol	µg/L	--	--	--	<0.5	--	<0.5

REVISED TENTATIVE

Parameter	Units	Effluent Limitation			Monitoring Data (From June 2009 To Sept. 2013)		
		Average Monthly	Average Weekly	Maximum Daily	Highest Average Monthly Discharge	Highest Average Weekly Discharge	Highest Daily Discharge
2,4-dichlorophenol	µg/L	--	--	--	<0.5	--	<0.5
2,4-dimethylphenol	µg/L	--	--	--	<0.5	--	<0.5
4,6-dinitro-o-resol (2-methyl-4,6-Dinitrophenol)	µg/L	--	--	--	<2	--	<2
2,4-dinitrophenol	µg/L	--	--	--	<5	--	<5
2-nitrophenol	µg/L	--	--	--	<5	--	<5
4-nitrophenol	µg/L	--	--	--	<10	--	<10
3-Methyl-4-Chlorophenol (P-chloro-m-resol)	µg/L	--	--	--	<10	--	<10
Pentachlorophenol	µg/L	--	--	--	<1	--	<1
Phenol	µg/L	--	--	--	<1	--	<1
2,4,6-trichlorophenol	µg/L	--	--	--	2	--	2
Acenaphthene	µg/L	--	--	--	0.41	--	0.41
Acenaphthylene	µg/L	--	--	--	<1	--	<1
Anthracene	µg/L	--	--	--	<10	--	<10
Benzidine	µg/L	--	--	--	<10	--	<10
Benzo(a)Anthracene	µg/L	--	--	--	<5	--	<5
Benzo(a)Pyrene	µg/L	--	--	--	<5	--	<5
Benzo(b)Fluoranthene	µg/L	--	--	--	<0.02	--	<0.02
Benzo(ghi)Perylene	µg/L	--	--	--	0.01	--	0.01
Benzo(k)Fluoranthene	µg/L	--	--	--	<5	--	<5
Bis(2-Chloroethoxy) methane	µg/L	--	--	--	<0.02	--	<0.02
Bis(2-Chloroethyl)Ether	µg/L	--	--	--	<5	--	<5
Bis(2-Chloroisopropyl) Ether	µg/L	--	--	--	<1	--	<1
Bis(2-Ethylhexyl)Phthalate	µg/L	--	--	--	<2	--	<2
4-Bromophenyl Phenyl Ether	µg/L	--	--	--	<2	--	<2
Butylbenzyl Phthalate	µg/L	--	--	--	<5	--	<5

REVISED TENTATIVE

Parameter	Units	Effluent Limitation			Monitoring Data (From June 2009 To Sept. 2013)		
		Average Monthly	Average Weekly	Maximum Daily	Highest Average Monthly Discharge	Highest Average Weekly Discharge	Highest Daily Discharge
2-Chloronaphthalene	µg/L	--	--	--	<10	--	<10
4-Chlorophenyl Phenyl Ether	µg/L	--	--	--	<10	--	<10
Chrysene	µg/L	--	--	--	<5	--	<5
Dibenzo(a,h)Anthracene	µg/L	--	--	--	<0.02	--	<0.02
1,2-Dichlorobenzene	µg/L	--	--	--	<0.02	--	<0.02
1,3-Dichlorobenzene	µg/L	--	--	--	<0.5	--	<0.5
1,4-Dichlorobenzene	µg/L	--	--	--	<0.5	--	<0.5
3-3'-Dichlorobenzidine	µg/L	--	--	--	0.25	--	0.25
Diethyl Phthalate	µg/L	--	--	--	<5	--	<5
Dimethyl Phthalate	µg/L	--	--	--	1	--	1
Di-n-Butyl Phthalate	µg/L	--	--	--	<2	--	<2
2-4-Dinitrotoluene	µg/L	--	--	--	<10	--	<10
2-6-Dinitrotoluene	µg/L	--	--	--	<5	--	<5
Di-n-Octyl Phthalate	µg/L	--	--	--	<5	--	<5
1,2-Diphenylhydrazine	µg/L	--	--	--	<10	--	<10
Fluoranthene	µg/L	--	--	--	<1	--	<1
Fluorene	µg/L	--	--	--	<1	--	<1
Hexachlorobenzene	µg/L	--	--	--	<10	--	<10
Hexachlorobutadiene	µg/L	--	--	--	<1	--	<1
Hexachlorocyclopentadiene	µg/L	--	--	--	<1	--	<1
Hexachloroethane	µg/L	--	--	--	<5	--	<5
Indeno(1,2,3-cd)Pyrene	µg/L	--	--	--	<1	--	<1
Isophorone	µg/L	--	--	--	0.021	--	0.021
Naphthalene	µg/L	--	--	--	<1	--	<1
Nitrobenzene	µg/L	--	--	--	<1	--	<1
N-Nitrosodimethylamine	µg/L	--	--	--	<1	--	<1
N-Nitrosodi-n-Propylamine	µg/L	--	--	--	0.48	--	0.48

REVISED TENTATIVE

Parameter	Units	Effluent Limitation			Monitoring Data (From June 2009 To Sept. 2013)		
		Average Monthly	Average Weekly	Maximum Daily	Highest Average Monthly Discharge	Highest Average Weekly Discharge	Highest Daily Discharge
N-Nitrosodiphenylamine	µg/L	--	--	--	<5	--	<5
Phenanthrene	µg/L	--	--	--	<1	--	<1
Pyrene	µg/L	--	--	--	<5	--	<5
1,2,4-Trichlorobenzene	µg/L	--	--	--	<10	--	<10
Aldrin	µg/L	--	--	--	<5	--	<5
Alpha-BHC	µg/L	--	--	--	<0.01	--	<0.01
Beta-BHC	µg/L	--	--	--	<0.01	--	<0.01
Gamma-BHC (Lindane)	µg/L	--	--	--	<0.01	--	<0.01
delta-BHC	µg/L	--	--	--	0.01	--	0.01
Chlordane	µg/L	--	--	--	<0.01	--	<0.01
4,4'-DDT	µg/L	--	--	--	<0.05	--	<0.05
4,4'-DDE	µg/L	--	--	--	<0.01	--	<0.01
4,4'-DDD	µg/L	--	--	--	<0.01	--	<0.01
Dieldrin	µg/L	--	--	--	<0.01	--	<0.01
Alpha-Endosulfan	µg/L	--	--	--	<0.01	--	<0.01
Beta-Endosulfan	µg/L	--	--	--	<0.01	--	<0.01
Endosulfan Sulfate	µg/L	--	--	--	<0.01	--	<0.01
Endrin	µg/L	--	--	--	<0.01	--	<0.01
Endrin Aldehyde	µg/L	--	--	--	<0.01	--	<0.01
Heptachlor	µg/L	--	--	--	<0.01	--	<0.01
Heptachlor Epoxide	µg/L	--	--	--	<0.01	--	<0.01
PCB 1016	µg/L	--	--	--	<0.01	--	<0.01
PCB 1221	µg/L	--	--	--	<0.01	--	<0.01
PCB 1232	µg/L	--	--	--	<0.1	--	<0.1
PCB 1242	µg/L	--	--	--	<0.05	--	<0.05
PCB 1248	µg/L	--	--	--	<0.3	--	<0.3
PCB 1254	µg/L	--	--	--	<0.1	--	<0.1
PCB 1260	µg/L	--	--	--	<0.1	--	<0.1
Toxaphene	µg/L	--	--	--	<0.05	--	<0.05

REVISED TENTATIVE

Parameter	Units	Effluent Limitation			Monitoring Data (From June 2009 To Sept. 2013)		
		Average Monthly	Average Weekly	Maximum Daily	Highest Average Monthly Discharge	Highest Average Weekly Discharge	Highest Daily Discharge
Barium	µg/L	--	--	--	44.8	--	44.8
Iron	µg/L	--	--	--	66	--	66

D. Compliance Summary

1. Toxicity

No exceedances of the 1.0 TUc monthly median trigger were observed in the final effluent from June 1, 2009 to June 30, 2013. However, three individual tests had more than 1.0 TUc during the compliance testing and three species screening as shown in the tables below.

On June 6, 2014, the Regional Water Board issued the Joint Outfall System a Notice of Violation relating to effluent toxicity sampling. The specific example given in the NOV for the San Jose Creek WRP was the misinterpretation of the chronic toxicity test result for January 3, 2013.

Table F-4. Compliance History– Chronic Bioassay Toxicity for San Jose Creek East: (June 2009 – June 2013)

Test Date	Test Species	Endpoint	NOEC	TUc	Monthly Median TUc	EC/IC25	% Effect in 100% Sample (95% CI)
11/10/09 (Species Screening)	Pimephales promelas	Survival Growth	100% 100%	1.0 1.0	1.0	>100% >100%	-5.3% (N/A) -10.7% (-18.8 to -2.7)
	Ceriodaphina dubia[a]	Survival Reproduction	100% <20%	1.0 >5.0		>100% 7.4%	20.0% (-6.1 to 46.1) 73.0% (60.2 to 85.8)

Table F-5. Compliance History – Chronic Bioassay Toxicity for San Jose Creek West: (June 2009 – June 2013)

Test Date	Test Species	Endpoint	NOEC	TUc	Monthly Median TUc	EC/IC25	% Effect in 100% Sample (95% CI)
08/12/10	Ceriodaphina dubia	Survival Reproduction	100% 40%	1.0 2.5	1.0	90.0% 26.2%	30.0% (0.1 to 59.9) 69.3% (46.6 to 92.0)
08/24/10	Ceriodaphina dubia	Survival Reproduction	100% 100%	1.0 1.0		>100% >100%	-11.1% (N/A) -1.3% (-18.8 to 16.2)
08/27/10	Ceriodaphina dubia	Survival Reproduction	100% 100%	1.0 1.0		>100% >100%	0% (N/A) -2.8% (-10.4 to 4.9)
05/10/11	*Ceriodaphnia dubia*	*Survival* *Reproduction*	100% 80%	1.0 1.3	1.0	*>100%* *>100%*	*20.0% (-6.1 to 46.1)* *19.1% (6.3 to 31.9)*
05/20/11	*Ceriodaphnia dubia*	*Survival* *Reproduction*	100% 100%	1.0 1.0		*>100%* *>100%*	*0% (N/A)* *-6.5% (-11.9 to -1.1)*

REVISED TENTATIVE

Test Date	Test Species	Endpoint	NOEC	TUc	Monthly Median TUc	EC/IC25	% Effect in 100% Sample (95% CI)
05/26/11	*Ceriodaphnia dubia*	*Survival* *Reproduction*	100% 100%	1.0 1.0		*>100%* *>100%*	*-11.1% (N/A)* *-16.1% (-26.7 to -5.5)*

2. **Other Pollutants**

Between 2009 and 2013, monitoring at San Jose Creek WRP identified one pH exceedance.

E. Planned Changes

On July 10, 2014 the Permittee submitted a revision to the ROWD for San Jose Creek Water Reclamation Facility describing a pending groundwater recharge project with the Upper San Gabriel Valley Municipal Water District, the Indirect Reuse and Replenishment Project (IRRP). Up to 10,000 acre-feet per year (8.93 mgd) would flow through a nine-mile pipeline to two new outfalls, Discharge Point 004 and 005. A map of the IRRP area and proposed outfalls is shown in Figure B-5. Previous discharge locations associated with this project were described in R4-2009-0078, but were never constructed. Discharge from the IRRP at proposed future locations is contingent upon the issuance of Water Recycling Requirements (WRRs) for the Permittee and other project sponsors in addition to the Upper San Gabriel Valley Municipal Water District. The Los Angeles County Department of Public Works (LACDPW) operates and manages the river channel and pipelines used to transport suitably treated wastewater to the San Gabriel River. The Main San Gabriel Basin Watermaster, a special state agency, is charged with the responsibility of replenishing and monitoring the groundwater quality of the San Gabriel Groundwater Basins. Additional outfalls, Discharge Points No. 004 and 005 are proposed to deliver advanced treated water to the IRRP and are included in this Order. Recycled water use from the Plant is permitted for non-potable applications under Order Nos. 87-50 and 97-072, however, neither Order permits the recycled water use for groundwater replenishment requirements for surface application as regulated in DDW's Groundwater Reuse and Replenishment using Recycled Water adopted in June of 2014Discharge from such outfalls cannot begin until the DDW has approved a Title 22 Engineering Report and the WRR has been adopted by the Regional Water Board. In the event that this project goes forward, depending upon the final design and the exact location of spreading, this NPDES permit may need to be revised according.

Gaseous chlorine is currently used as a disinfectant at the Facility and sulfur dioxide is added prior to discharge to remove residual chlorine. Treated wastewater discharged to San Gabriel River and San Jose Creek is dechlorinated but the effluent delivered for reuse is not dechlorinated. The existing chlorine and sulfur dioxide disinfection, chlorination and dechlorination are expected to be replaced with sodium hypochlorite and sodium bisulfite facilities to reduce health and safety risk to the public. This sequential chlorination project entails the construction of new chemical facilities consisting of chemical storage tanks, secondary containment structures, piping and chemical feed, automated flow control valves and piping for metering; the decommissioning of the existing chlorine and sulfur dioxide facilities; and the demolition of the existing emergency caustic scrubbers used to treat chlorine and sulfur dioxide gas leaks. The estimated start of construction is October 2015 with completion in March 2017.

REVISED TENTATIVE

III. APPLICABLE PLANS, POLICIES, AND REGULATIONS

The requirements contained in this Order are based on the requirements and authorities described in this section.

A. Legal Authorities

This Order serves as WDRs pursuant to article 4, chapter 4, division 7 of the California Water Code (commencing with section 13260). This Order is also issued pursuant to section 402 of the federal Clean Water Act (CWA) and implementing regulations adopted by the U.S. EPA and chapter 5.5, division 7 of the Water Code (commencing with section 13370). It shall serve as an NPDES permit for point source discharges from this facility to surface waters**.**

B. California Environmental Quality Act (CEQA)

Under Water Code section 13389, this action to adopt an NPDES permit is exempt from the provisions of Chapter 3 of CEQA, (commencing with section 21100) of Division 13 of the Public Resources Code.

C. State and Federal Laws, Regulations, Policies, and Plans

1. **Water Quality Control Plan.** The Regional Water Board adopted a Water Quality Control Plan for the Los Angeles Region (Basin Plan) on June 4, 1994 that designates beneficial uses, establishes water quality objectives (WQOs), and contains implementation programs and policies to achieve those objectives for all waters addressed through the plan. Requirements in this Order implement the Basin Plan. In addition, the Basin Plan implements State Water Board Resolution 88-63, which established state policy that all waters, with certain exceptions, should be considered suitable or potentially suitable for municipal or domestic supply. On May 26, 2000, the USEPA approved the revised Basin Plan except for the implementation plan for potential MUN-designated water bodies. On August 22, 2000, the City of Los Angeles, City of Burbank, City of Simi Valley, and the County Sanitation Districts of Los Angeles County challenged USEPA's water quality standards action in the U.S. District Court. On December 18, 2001, the court issued an order remanding the matter to USEPA to take further action on the 1994 Basin Plan consistent with the court's decision. On February 15, 2002, USEPA revised its decision and approved the 1994 Basin Plan in whole. In its February 15, 2002 letter, USEPA stated:

> EPA bases its approval on the court's finding that the Regional Board's identification of waters with an asterisk ("*") in conjunction with the implementation language at page 2-4 of the 1994 Basin Plan, was intended "to only conditionally designate and not finally designate as MUN those water bodies identified by an ('*') for the MUN use in Table 2-1 of the Basin Plan, without further action." Court Order at p. 4. Thus, the waters identified with an ("*") in Table 2-1 do not have MUN as a designated use until such time as the State undertakes additional study and modifies its Basin Plan. Because this conditional use designation has no legal effect, it does not constitute a new water quality standard subject to EPA review under section 303(c)(3) of the Clean Water Act ("CWA"). 33 U.S.C. § 1313(c)(3).

USEPA's decision has no effect on the MUN designations of groundwater. Beneficial uses applicable to San Jose Creek and San Gabriel River are as follows:

REVISED TENTATIVE

Table F-6. Basin Plan Beneficial Uses and Features

Water Body Designation No.	Receiving Water Name	Beneficial Use(s)	Feature
180701060502	San Jose Creek Reach 1	Existing: wildlife habitat (WILD); Intermittent: groundwater recharge (GWR); non-contact water recreation (REC-2); and, warm freshwater habitat (WARM); Potential: water contact recreation (REC-1)[3] and MUN[2].	Early Life Stages (ELS) Absent October 1 to April 30 Early Life Stages (ELS) Present May 1 to September 30 2008-2010 303(d) list ammonia, coliform bacteria, TDS, Toxicity, and pH
180701060601	San Gabriel River Reach 5 Santa Fe Dam to Huntington Drive	Existing: WILD Intermittent: GWR, WARM REC-1[3], REC-2 Potential: MUN[2].	Early Life Stages (ELS) Absent October 1 to April 30 Early Life Stages (ELS) Present May 1 to September 30
180701060601	San Gabriel River Reach 4 Ramona Blvd to Sana Fe Dam	Existing: WILD Intermittent: GWR, WARM REC-1[3], REC-2 Potential: MUN[2].	Early Life Stages (ELS) Absent October 1 to April 30 Early Life Stages (ELS) Present May 1 to September 30
180701060601	San Gabriel River Reach 3- Whittier Narrows to Ramona Blvd	Existing: WILD Intermittent: GWR, REC-1[3], REC-2, and WARM Potential: MUN[2].	Early Life Stages (ELS) Absent October 1 to April 30 Early Life Stages (ELS) Present May 1 to September 30
180701060606	San Gabriel River Reach 2 – Whittier Narrows Dam to Firestone Blvd.	Existing: REC-1[3], REC-2, WILD, and rare, threatened, or endangered species (RARE); Intermittent: GWR and WARM Potential: industrial service supply (IND), and industrial process supply (PROC), and MUN[2].	Early Life Stages (ELS) Absent October 1 to April 30 Early Life Stages (ELS) Present May 1 to September 30 2008-2010 303(d) list coliform bacteria, cyanide and lead

REVISED TENTATIVE

[2] The potential MUN beneficial use for the water body is consistent with Regional Water Board Resolution 89-03; however, the Regional Water Board has only conditionally designated the MUN beneficial uses and at this time has not established effluent limitations designed to protect the conditional designation.

Water Body Designation No.	Receiving Water Name	Beneficial Use(s)	Feature
180701060606	San Gabriel River Reach 1: Firestone Boulevard to Estuary	Existing: REC-1[3] and REC-2 Potential: MUN[2], WARM, and WILD.	Early Life Stages (ELS) Absent 2008-2010 303(d) list coliform bacteria and pH
180701060606	San Gabriel River Estuary	Existing: IND, navigation (NAV), REC-1[3], REC-2, commercial and sport fishing (COMM), estuarine habitat (EST), marine habitat (MAR), WILD, RARE, Migration of aquatic organisms (MIGR); and spawning, reproduction, and/or early development (SPWN). Potential: shell harvesting (SHELL)	Early Life Stages (ELS) Absent 2008-2010 303(d) list copper, dioxin, nickel and dissolved oxygen

Table F-7. Basin Plan Beneficial Uses – Ground Waters

Department of Water Resources (DWR) Basin	Receiving Water Name	Beneficial Use(s)				
		MUN	IND	PROC	AGR	AQUA
4-13	**San Gabriel Valley**	existing	existing	existing	existing	
4-11.04	**Coastal Plain of Los Angeles**					
	Central basin	existing	existing	existing	existing	

2. **National Toxics Rule (NTR) and California Toxics Rule (CTR).** USEPA adopted the NTR on December 22, 1992, and later amended it on May 4, 1995 and November 9, 1999. About forty criteria in the NTR applied in California. On May 18, 2000, USEPA adopted the CTR. The CTR promulgated new toxics criteria for California and, in addition, incorporated the previously adopted NTR criteria that were applicable in the state. The CTR was amended on February 13, 2001. These rules contain federal water quality criteria for priority pollutants.

3. **State Implementation Policy (SIP).** On March 2, 2000, the State Water Board adopted the Policy for Implementation of Toxics Standards for Inland Surface Waters, Enclosed Bays, and Estuaries of California (State Implementation Policy or SIP). The SIP became

[3] Although the Los Angeles County Department of Public Works post signs prohibiting access to the San Gabriel River, its tributaries and estuary, the public has been observed fishing and wading across the river. There is public access to the San Gabriel River, its tributaries, and estuary through the bike trails that run parallel to the river. Since there is public contact in the receiving water downstream of the discharge, the quality of wastewater discharged to the Rio Hondo and San Gabriel River must be such that no public health hazard is created. Access is prohibited by Los Angeles County Department of Public Works in concrete-channelized areas.

REVISED TENTATIVE

effective on April 28, 2000, with respect to the priority pollutant criteria promulgated for California by the USEPA through the NTR and to the priority pollutant objectives established by the Regional Water Board in the Basin Plan. The SIP became effective on May 18, 2000, with respect to the priority pollutant criteria promulgated by the USEPA through the CTR. The State Water Board adopted amendments to the SIP on February 24, 2005, that became effective on July 13, 2005. The SIP establishes implementation provisions for priority pollutant criteria and objectives and provisions for chronic toxicity control. Requirements of this Order implement the SIP.

4. **Alaska Rule.** On March 30, 2000, USEPA revised its regulation that specifies when new and revised state and tribal water quality standards become effective for CWA purposes (40 CFR § 131.21, 65 Federal Register 24641 (April 27, 2000)). Under the revised regulation (also known as the Alaska Rule), new and revised standards submitted to USEPA after May 30, 2000, must be approved by USEPA before being used for CWA purposes. The final rule also provides that standards already in effect and submitted to USEPA by May 30, 2000, may be used for CWA purposes, whether or not approved by USEPA.

5. **Stringency of Requirements for Individual Pollutants.** This Order contains both technology-based effluent limitations (TBELs) and water quality-based effluent limitations (WQBELs) for individual pollutants. The TBELs consist of restrictions on BOD, TSS, oil and grease, settleable solids, turbidity, pH, and percent removal of BOD and TSS. Restrictions on BOD, TSS, oil and grease, settleable solids, turbidity, and pH are discussed in section IV.B.2 of the Fact Sheet. This Order's technology-based pollutant restrictions implement the minimum, applicable federal technology-based requirements. In addition, this Order contains effluent limitations more stringent than the minimum, federal technology-based requirements that are carried over from the previous permit.

   WQBELs have been scientifically derived to implement WQOs that protect beneficial uses. Both the beneficial uses and the WQOs have been approved pursuant to federal law and are the applicable federal water quality standards. All beneficial uses and WQOs contained in the Basin Plan and the Ocean Plan were approved under state law and submitted to and approved by USEPA prior to May 30, 2000. Any WQOs and beneficial uses submitted to USEPA prior to May 30, 2000, but not approved by USEPA before that date, are nonetheless "applicable water quality standards for purposes of the CWA" pursuant to 40 CFR § 131.21(c)(1). Collectively, this Order's restrictions on individual pollutants are no more stringent than required to implement the requirements of the CWA.

6. **Antidegradation Policies.** Federal regulation 40 CFR § 131.12 requires that state water quality standards include an antidegradation policy consistent with the federal antidegradation policy. The State Water Board established California's antidegradation policy in State Water Board Resolution 68-16 ("Statement of Policy with Respect to Maintaining the Quality of the Waters of the State"). Resolution 68-16 is deemed to incorporate the federal antidegradation policy where the federal policy applies under federal law. Resolution 68-16 requires that existing water quality be maintained unless degradation is justified based on specific findings. The Regional Water Board's Basin Plan implements, and incorporates by reference, both the state and federal antidegradation policies. The discharges permitted in this Order are consistent with the antidegradation provisions of 40 CFR § 131.12 and State Water Board Resolution 68-16.

7. **Anti-Backsliding Requirements.** Sections 402(o) and 303(d)(4) of the CWA and federal regulations at 40 CFR § 122.44(l) restrict backsliding in NPDES permits. These anti-

REVISED TENTATIVE

backsliding provisions require that effluent limitations in a reissued permit be as stringent as those in the previous permit, with some exceptions in which limitations may be relaxed.

8. **Endangered Species Act (ESA) Requirements.** This Order does not authorize any act that results in the taking of a threatened or endangered species or any act that is now prohibited, or becomes prohibited in the future, under either the California ESA (Fish and Game Code, sections 2050 to 2097) or the Federal ESA (16 USC sections 1531 to 1544). This Order requires compliance with effluent limits, receiving water limits, and other requirements to protect the beneficial uses of waters of the state. The Permittee is responsible for meeting all requirements of the applicable ESA.

9. **Water Rights.** Prior to making any change in the point of discharge, place of use, or purpose of use of treated wastewater that results in a decrease of flow in any portion of a surface or subterranean stream, the Permittee must file a petition with the State Water Board (State Water Board), Division of Water Rights, and receive approval for such a change. The State Water Board retains the jurisdictional authority to enforce such requirements under CWC section 1211.

10. **Domestic Water Quality.** It is the policy of the State of California that every human being has the right to safe, clean, affordable, and accessible water adequate for human consumption, cooking, and sanitary purposes. This order promotes that policy by requiring discharges to meet maximum contaminant levels developed to protect human health and ensure that water is safe for domestic use.

11. **Water Recycling.** In accordance with statewide policies concerning water reclamation[4], this Regional Water Board strongly encourages, wherever practical, water recycling, water conservation, and use of storm water and dry-weather urban runoff. The Permittee shall investigate the feasibility of recycling, conservation, and/or alternative disposal methods of wastewater (such as groundwater injection), and/or use of storm water and dry-weather urban runoff. The Permittee submitted a feasibility study on January 3, 2014. The Permittee shall submit an update to this feasibility study as part of the submittal of the Report of Waste Discharge (ROWD) for the next permit renewal.

12. **Monitoring and Reporting.** 40 CFR § 122.48 requires that all NPDES permits specify requirements for recording and reporting monitoring results. CWC sections 13267 and 13383 authorize the Regional Water Board to require technical and monitoring reports. The Monitoring and Reporting Program (MRP) establishes monitoring and reporting requirements to implement federal and state requirements. This MRP is provided in Attachment E.

13. **Sewage Sludge/Biosolids Requirements.** Section 405 of the CWA and implementing regulations at 40 CFR part 503 require that producers of sewage sludge/biosolids meet certain reporting, handling, and use or disposal requirements. The state has not been delegated the authority to implement this program; therefore, USEPA is the implementing agency.

REVISED TENTATIVE

[4] See, e.g., CWC sections 13000 and 13550-13557, State Water Board Resolution No. 77-1 (Policy with Respect to Water Reclamation in California), and State Water Board Resolution No. 2009-0011 (Recycled Water Policy).

REVISED TENTATIVE

D. Impaired Water Bodies on CWA 303(d) List

The State Water Board proposed the California 2008-2010 Integrated Report from a compilation of the adopted Regional Water Boards' Integrated Reports containing 303(d) List of Impaired Waters and 305(b) Reports following recommendations from the Regional Water Boards and information solicited from the public and other interested parties. The Regional Water Boards' Integrated Reports were used to revise their 2006 303(d) List. On August 4, 2010, the State Water Board adopted the California 2008-2010 Integrated Report. On November 12, 2010, the USEPA approved California 2008-2010 Integrated Report Section 303(d) List of Impaired Waters requiring Total Maximum Daily Loads (TMDL) for the Los Angeles Region. The 303(d) List can be viewed at the following link:

http://www.waterboards.ca.gov/water_issues/programs/tmdl/integrated2010.shtml

San Jose Creek, San Gabriel River and their tributaries are in the California 2008-2010 Integrated Report. The following are the identified pollutants impacting the receiving water:

San Jose Creek Reach 1 (San Gabriel confluence to Temple St.)
Pollutants: Ammonia, Coliform bacteria, TDS, Toxicity and pH

San Gabriel River Reach 2 (Firestone Blvd. to Whittier Narrows Dam) -- Hydrologic unit 405.15, Calwater Watershed 18070104
Pollutants: Coliform bacteria, cyanide and lead.

San Gabriel River Reach 1 (Estuary to Firestone Blvd.) -- Hydrologic unit 405.15, Calwater Watershed 18070104
Pollutants: Coliform bacteria and pH.

San Gabriel River Estuary -- Hydrologic unit 405.15, Calwater Watershed 18070104
Pollutants: Copper, dioxin, nickel, and dissolved oxygen.

E. Other Plans, Polices and Regulations

1. **Sources of Drinking Water Policy.** On May 19, 1988, the State Water Board adopted Resolution No. 88-63, Sources of Drinking Water (SODW) Policy, which established a policy that all surface and ground waters, with limited exemptions, are suitable or potentially suitable for municipal and domestic supply. To be consistent with State Water Board's SODW Policy, on March 27, 1989, the Regional Water Board adopted Resolution No. 89-03, Incorporation of Sources of Drinking Water Policy into the Water Quality Control Plans (Basin Plans) – Santa Clara River Basin (4A)/ Los Angeles River Basin (4B).

   Consistent with Regional Water Board Resolution No. 89-03 and State Water Board Resolution No. 88-63, in 1994 the Regional Water Board conditionally designated all inland surface waters in Table 2-1 of the 1994 Basin Plan as existing, intermittent, or potential for Municipal and Domestic Supply (MUN). However, the conditional designation in the 1994 Basin Plan included the following implementation provision: "no new effluent limitations will be placed in Waste Discharge Requirements as a result of these [potential MUN designations made pursuant to the SODW policy and the Regional Water Board's enabling resolution] until the Regional Water Board adopts [a special Basin Plan Amendment that incorporates a detailed review of the waters in the Region that should be exempted from

the potential MUN designations arising from SODW policy and the Regional Water Board's enabling resolution]." On February 15, 2002, the USEPA clarified its partial approval (May 26, 2000) of the 1994 Basin Plan amendments and acknowledged that the conditional designations do not currently have a legal effect, do not reflect new water quality standards subject to USEPA review, and do not support new effluent limitations based on the conditional designations stemming from the SODW Policy until a subsequent review by the Regional Water Board finalizes the designations for these waters. This permit is designed to be consistent with the existing Basin Plan.

2. **Title 22 of the California Code of Regulations** (CCR Title 22). The California Department of Public Health (CDPH) established primary and secondary maximum contaminant levels (MCLs) for inorganic, organic, and radioactive contaminants in drinking water. These MCLs are codified in Title 22. The Basin Plan (Chapter 3) incorporates Title 22 primary MCLs by reference. This incorporation by reference is prospective, including future changes to the incorporated provisions as the changes take effect. Title 22 primary MCLs have been used as bases for effluent limitations in WDRs and NPDES permits to protect groundwater recharge beneficial use when that receiving groundwater is designated as MUN. Also, the Basin Plan specifies that "Ground waters shall not contain taste or odor-producing substances in concentrations that cause nuisance or adversely affect beneficial uses."

3. **Secondary Treatment Regulations.** 40 CFR Part 133 establishes the minimum levels of effluent quality to be achieved by secondary treatment. These limitations, established by USEPA, are incorporated into this Order, except where more stringent limitations are required by other applicable plans, policies, or regulations or to prevent backsliding.

4. **Storm Water.** CWA section 402(p), as amended by the Water Quality Act of 1987, requires NPDES permits for storm water discharges. Pursuant to this requirement, in 1990, USEPA promulgated 40 CFR § 122.26 that established requirements for storm water discharges under an NPDES program. To facilitate compliance with federal regulations, on November 1991, the State Water Board issued a statewide general permit, General NPDES Permit No. CAS000001 and Waste Discharge Requirements for Discharges of Storm Water Associated with Industrial Activities. This permit was amended in September 1992 and reissued on April 17, 1997 in State Water Board Order No. 97-03-DWQ to regulate storm water discharges associated with industrial activity. General NPDES Permit No. CAS000001 was revised on April 1, 2014 and becomes effective on July 1, 2015.

   Stormwater runoff from the San Jose Creek WRP is regulated separately under General NPDES permit No. CAS000001. On June 4, 1992, the Permittee filed a Notice of Intent to comply with the requirements of the general permit. The City developed and currently implements a Storm Water Pollution Prevention Plan (SWPPP), to comply with the State Water Board's General NPDES permit No. CAS000001.

5. **Sanitary Sewer Overflows (SSOs).** The CWA prohibits the discharge of pollutants from point sources to surface waters of the United States unless authorized under an NPDES permit. (33 United States Code (USC) sections 1311 and 1342). The State Water Board adopted General WDRs for Sanitary Sewer Systems, (Water Quality Order No. 2006-0003-DWQ; SSO WDR) on May 2, 2006, to provide a consistent, statewide regulatory approach to address SSOs. The SSO WDR requires public agencies that own or operate sanitary sewer systems to apply for coverage under the SSO WDR, develop and implement sewer system management plans, and report all SSOs to the State Water Board's online SSO database. Regardless of the coverage obtained under the SSO WDR, the Permittee's

REVISED TENTATIVE

collection system is part of the POTW that is subject to this NPDES permit. As such, pursuant to federal regulations, the Permittee must properly operate and maintain its collection system (40 CFR § 122.41 (e)), report any non-compliance (40 CFR § 122.41(1)(6) and (7)), and mitigate any discharge from the collection system in violation of this NPDES permit (40 CFR § 122.41(d)).

The requirements contained in this Order sections VI.C.3.b (Spill Cleanup Contingency Plan section), VI.C.4 (Construction, Operation and Maintenance Specifications section), and VI.C.6 (Spill Reporting Requirements section) are intended to be consistent with the requirements of the SSO WDR. The Regional Water Board recognizes that there may be some overlap between these NPDES permit provisions and SSO WDR requirements, related to the collection systems. The requirements of the SSO WDR are considered the minimum thresholds (see Finding 11 of State Water Board Order No. 2006-0003-DWQ). To encourage efficiency, the Regional Water Board will accept the documentation prepared by the Permittees under the SSO WDR for compliance purposes as satisfying the requirements in sections VI.C.3.b, VI.C.4, and VI.C.6, provided the more stringent provisions contained in this NPDES permit are also addressed. Pursuant to SSO WDR, section D, provision 2(iii) and (iv), the provisions of this NPDES permit supersede the SSO WDR, for all purposes, including enforcement, to the extent the requirements may be deemed duplicative.

6. **Watershed Management**. This Regional Water Board has been implementing a Watershed Management Approach (WMA) to address water quality protection in the Los Angeles Region, as detailed in the Watershed Management Initiative (WMI). The WMI is designed to integrate various surface and ground water regulatory programs while promoting cooperative, collaborative efforts within a watershed. It is also designed to focus limited resources on key issues and use sound science. Information about the San Gabriel River Watershed and other watersheds in the region can be obtained from the Regional Water Board's web site at http://www.waterboards.ca.gov/losangeles/water_issues/programs/regional_program/index.shtml#Watershed. The WMA emphasizes cooperative relationships between regulatory agencies, the regulated community, environmental groups, and other stakeholders in the watershed to achieve the greatest environmental improvements with the resources available.

   The accompanying Order fosters the implementation of this approach by protecting beneficial uses in the watershed and requiring the Permittee to participate with other stakeholders, in the development and implementation of a watershed-wide monitoring program. The Monitoring and Reporting Program (Attachment E) requires the Permittee to undertake the responsibilities delineated under an approved watershed-wide monitoring plan in the implementation of the Watershed-wide Monitoring Program for the San Gabriel River, which was approved by the Regional Water Board on September 25, 2006.

   The Regional Water Board has prepared and periodically updates its Watershed Management Initiative Chapter, the latest was updated June 2007. This document contains a summary of the region's approach to watershed management. It addresses each watershed and the associated water quality problems and issues. It describes the background and history of each watershed, current and future activities, and addresses TMDL development. The information can be accessed on our website: http://www.waterboards.ca.gov/losangeles.

REVISED TENTATIVE

7. **Relevant TMDLs**. Section 303(d) of the CWA requires states to identify water bodies that do not meet water quality standards and then to establish TMDLs for each water body for each pollutant of concern. TMDLs identify the maximum amount of pollutants that can be discharged to water bodies without causing violations of water quality standards.

   a. **San Gabriel River and Tributaries Metals TMDL** - On March 26, 2007, USEPA established the San Gabriel River watershed metals TMDLs. This Order includes effluent limitations for metals established by USEPA TMDLs. These effluent limitations are consistent with the concentration-based Waste Load Allocations (WLA) established for the POTWs and other point sources in these TMDLs. In this permit, Regional Water Board staff translates WLAs into effluent limitations by applying the CTR/SIP procedures or other applicable engineering practices authorized under federal regulations. The copper, lead, and zinc waste load allocations for San Gabriel River and its tributaries may be modified based on the results of new studies if the USEPA approves a revised TMDL and Implementation Plan for Metals in the San Gabriel River.

REVISED TENTATIVE

IV. RATIONALE FOR EFFLUENT LIMITATIONS AND DISCHARGE SPECIFICATIONS

The CWA requires point source dischargers to control the amount of conventional, non-conventional, and toxic pollutants that are discharged into the waters of the United States. The control of pollutants discharged is established through effluent limitations and other requirements in NPDES permits. There are two principal bases for effluent limitations in the Code of Federal Regulations: 40 C.F.R. section 122.44(a) requires that permits include applicable technology-based limitations and standards; and 40 C.F.R. section 122.44(d) requires that permits include water quality-based effluent limitations to attain and maintain applicable numeric and narrative water quality criteria to protect the beneficial uses of the receiving water.

The variety of potential pollutants found in the Facility discharges presents a potential for aggregate toxic effects to occur. Whole effluent toxicity (WET) is an indicator of the combined effect of pollutants contained in the discharge. Chronic toxicity is a more stringent requirement than acute toxicity. Therefore, chronic toxicity is considered a pollutant of concern for protection and evaluation of narrative Basin Plan Objectives.

A. Discharge Prohibitions

Effluent and receiving water limitations in this Order are based on the CWA, Basin Plan, State Water Board plans and policies, USEPA guidance and regulations, and best practicable waste treatment technology. This order authorizes the discharge of tertiary-treated wastewater from Discharge Point Nos. 001, 001A, 001B, 002, 003, 004 and 005. It does not authorize any other types of discharges.

B. Technology-Based Effluent Limitations (TBELs)

1. Scope and Authority

Technology-based effluent limits require a minimum level of treatment for industrial/municipal point sources based on currently available treatment technologies while allowing the Permittee to use any available control techniques to meet the effluent limits. The 1972 CWA required POTWs to meet performance requirements based on available wastewater treatment technology. Section 301 of the CWA established a required performance level--referred to as “secondary treatment” --that all POTWs were required to meet by July 1, 1977. More specifically, Section 301(b)(1)(B) of the CWA required that EPA develop secondary treatment standards for POTWs as defined in

Section 304(d)(1). Regulations promulgated in 40 CFR § 125.3(a)(1) require technology-based effluent limitations for municipal dischargers to be placed in NPDES permits based on Secondary Treatment Standards or Equivalent to Secondary Treatment Standards. EPA developed national secondary treatment regulations which are specified in 40 CFR Part 133. These technology- based regulations apply to all POTWs and identify the minimum level of effluent quality to be attained by secondary treatment in terms of five-day biochemical oxygen demand, total suspended solids, and pH.

2. Applicable Technology-Based Effluent Limitations

This Facility is subject to the technology-based regulations for the minimum level of effluent quality attainable by secondary treatment in terms of BOD520°C, TSS, and pH. However, limitations in previous Order No. R4-2009-0076 are based on tertiary-treated wastewater treatment standards. These effluent limitations have been carried over from the previous Order to avoid backsliding. Mass-based effluent limitations are based on a design flow rate of 100 mgd at Discharge Point Nos. 001,001A and 001B, 62.5 mgd at Discharge Point No.002, and 37.5 mgd at Discharge Point No. 003, 004 and 005. The removal efficiency for BOD and TSS is set at the minimum level attainable by secondary treatment technology. The following Table summarizes the TBELs applicable to the Facility:

Table F-8. Summary of TBELS

Parameter	Units	Effluent Limitations				
		Average Monthly	Average Weekly	Maximum Daily	Instantaneous Minimum	Instantaneous Maximum
$BOD_5$20°C	mg/L	20	30	45	--	--
	lbs/day[5]	16,700	25,000	37,530	--	--
	lbs/day[6]	10,400	15,600	23,500	--	--
	lbs/day[7]	6,260	9,380	14,100	--	--
TSS	mg/L	15	40	45	--	--
	lbs/day[5]	12,500	33,400	37,500	--	--
	lbs/day[6]	7,820	20,900	23,500	--	--
	lbs/day[7]	4,700	12,500	14,100	--	--
pH	standard units	--	--	--	6.5	8.5

[5] The mass emission rate for EFF-001, EFF-001A, and EFF-001B is based on the plant design flow rate of 100.0 MGD, and is calculated as follows: Flow (mgd) x Concentration (mg/L) x 8.34 (conversion factor) = lbs/day. During wet-weather storm events in which the flow exceeds the design capacity, the mass discharge rate limitations shall not apply, and concentration limitations will provide the only applicable effluent limitations.

[6] The mass emission rate for EFF-002 is based on the plant design flow rate of 62.5 MGD, and is calculated as follows: Flow (mgd) x Concentration (mg/L) x 8.34 (conversion factor) = lbs/day. During wet-weather storm events in which the flow exceeds the design capacity, the mass discharge rate limitations shall not apply, and concentration limitations will provide the only applicable effluent limitations.

[7] The mass emission rate for EFF-003, EFF-004, or EFF-005 is based on the plant design flow rate of 37.5 MGD, and is calculated as follows: Flow (mgd) x Concentration (mg/L) x 8.34 (conversion factor) = lbs/day. During wet-weather storm events in which the flow exceeds the design capacity, the mass discharge rate limitations shall not apply, and concentration limitations will provide the only applicable effluent limitations.

REVISED TENTATIVE

Parameter	Units	Effluent Limitations				
		Average Monthly	Average Weekly	Maximum Daily	Instantaneous Minimum	Instantaneous Maximum
Removal Efficiency for BOD and TSS	%	85	--	--	--	--

This Facility is also subject to TBELs contained in similar NPDES permits, for similar facilities, based on the treatment level achievable by tertiary-treated wastewater treatment systems. These effluent limitations are consistent with the State Water Board precedential decision, State Water Board Order No. WQ 2004-0010 for the City of Woodland.

C. Water Quality-Based Effluent Limitations (WQBELs)

1. Scope and Authority

CWA section 301(b) and 40 CFR § 122.44(d) require that permits include limitations more stringent than applicable federal technology-based requirements where necessary to achieve applicable water quality standards. This Order contains requirements, expressed as a technology equivalence requirement that are necessary to achieve water quality standards. The Regional Water Board has considered the factors listed in CWC section 13241 in establishing these requirements. The rationale for these requirements, which consist of tertiary treatment or equivalent requirements or other provisions, is discussed starting from section IV.C.2.

40 CFR § 122.44(d)(1)(i) requires that permits include effluent limitations for all pollutants that are or may be discharged at levels that have the reasonable potential to cause or contribute to an exceedance of a water quality standard, including numeric and narrative objectives within a standard. Where reasonable potential has been established for a pollutant, but there is no numeric criterion or objective for the pollutant, WQBELs must be established using (1) USEPA criteria guidance under CWA section 304(a), supplemented where necessary by other relevant information; (2) an indicator parameter for the pollutant of concern; or (3) a calculated numeric water quality criterion, such as a proposed state criterion or policy interpreting the state's narrative criterion, supplemented with other relevant information, as provided in section 122.44(d)(1)(vi).

The process for determining reasonable potential and calculating WQBELs when necessary is intended to protect the designated uses of the receiving water as specified in the Basin Plan, and achieve applicable WQOs and criteria that are contained in other state plans and policies, or any applicable water quality criteria contained in the CTR and NTR.

2. Applicable Beneficial Uses and Water Quality Criteria and Objective

a. The Basin Plan establishes the beneficial uses for surface water bodies in the Los Angeles region. The beneficial uses of the San Jose Creek and San Gabriel River affected by the discharge have been described previously in this Fact Sheet.

b. The Basin Plan also specifies narrative and numeric WQOs applicable to surface water as shown in the following discussions.

REVISED TENTATIVE

i. **$BOD_5$20°C and TSS**

$BOD_5$20°C is a measure of the quantity of the organic matter in the water and, therefore, the water's potential for becoming depleted in dissolved oxygen. As organic degradation takes place, bacteria and other decomposers use the oxygen in the water for respiration. Unless there is a steady resupply of oxygen to the system, the water will quickly become depleted of oxygen. Adequate dissolved oxygen levels are required to support aquatic life. Depressions of dissolved oxygen can lead to anaerobic conditions resulting in odors, or, in extreme cases, fish kills.

40 CFR part 133 describes the minimum level of effluent quality attainable by secondary treatment, for BOD and TSS, as:

- The 30-day average shall not exceed 30 mg/L, and
- The 7-day average shall not exceed 45 mg/L.

San Jose Creek WRP provides tertiary treatment. The Facility achieves solids removals that are better than secondary-treated wastewater by filtering the effluent.

The monthly average, the 7-day average, and the daily maximum limits cannot be removed because none of the anti-backsliding exceptions apply. Those limits were all included in the previous permit (Order R4-2009-0078) and the San Jose Creek WRP has been able to meet both limits (monthly average and the daily maximum), for both BOD and TSS.

In addition to having mass-based and concentration-based effluent limitations for BOD and TSS, the San Jose Creek WRP also has a percent removal requirement for these two constituents. In accordance with 40 CFR §§ 133.102(a)(3) and 133.102(b)(3), the 30-day average percent removal shall not be less than 85 percent. Percent removal is defined as a percentage expression of the removal efficiency across a treatment plant for a given pollutant parameter, as determined from the 30-day average values of the raw wastewater influent pollutant concentrations to the Facility and the 30-day average values of the effluent pollutant concentrations for a given time period

ii. **pH**

The hydrogen ion activity of water (pH) is measured on a logarithmic scale, ranging from 0 to 14. While the pH of "pure" water at 25°C is 7.0, the pH of natural waters is usually slightly basic due to the solubility of carbon dioxide from the atmosphere. Minor changes from natural conditions can harm aquatic life. In accordance with 40 CFR § 133.102(c), the effluent values for pH shall be maintained within the limits of 6.0 to 9.0 unless the POTW demonstrates that (1) inorganic chemicals are not added to the waste stream as part of the treatment process; and (2) contributions from industrial sources do not cause the pH of the effluent to be less than 6.0 or greater than 9.0. The effluent limitation for pH in this permit requiring that the wastes discharged shall at all times be within the range of 6.5 to 8.5 is taken from the Basin Plan (page 3-15) which reads "the pH of inland surface waters shall not be depressed below 6.5 or raised above 8.5 as a result of waste discharge."

REVISED TENTATIVE

iii. **Settleable solids**

Excessive deposition of sediments can destroy spawning habitat, blanket benthic (bottom dwelling) organisms, and abrade the gills of larval fish. The limits for settleable solids are based on the Basin Plan (page 3-16) narrative, "Waters shall not contain suspended or settleable material in concentrations that cause nuisance or adversely affect beneficial uses." The numeric limits are empirically based on results obtained from the settleable solids 1-hour test, using an Imhoff cone.

It is impracticable to use a 7-day average limitation, because short-term spikes of settleable solid levels that would be permissible under a 7-day average scheme would not be adequately protective of all beneficial uses. The monthly average and the daily maximum limits cannot be removed because none of the anti-backsliding exceptions apply. The monthly average and daily maximum limits were both included in the previous permit (Order R4-2009-0078) and the San Jose Creek WRP has been able to meet both limits.

iv. **Oil and grease**

Oil and grease are not readily soluble in water and form a film on the water surface. Oily films can coat birds and aquatic organisms, impacting respiration and thermal regulation, and causing death. Oil and grease can also cause nuisance conditions (odors and taste), are aesthetically unpleasant, and can restrict a wide variety of beneficial uses. The limits for oil and grease are based on the Basin Plan (page 3-11) narrative, "Waters shall not contain oils, greases, waxes, or other materials in concentrations that result in a visible film or coating on the surface of the water or on objects in the water, that cause nuisance, or that otherwise adversely affect beneficial uses."

The numeric limits are empirically based on concentrations at which an oily sheen becomes visible in water. It is impracticable to use a 7-day average limitation, because spikes that occur under a 7-day average scheme could cause a visible oil sheen. A 7-day average scheme would not be sufficiently protective of beneficial uses. The monthly average and the daily maximum limits cannot be removed because none of the anti-backsliding exceptions apply. Both limits were included in the previous permit (Order No. R4-2009-0078) and the San Jose Creek WRP has been able to meet both limits.

v. **Residual Chlorine**

Disinfection of wastewaters with chlorine produces a chlorine residual. Chlorine and its reaction products are toxic to aquatic life. The limit for residual chlorine is based on the Basin Plan (page 3-9) narrative, "Chlorine residual shall not be present in surface water discharges at concentrations that exceed 0.1 mg/L and shall not persist in receiving waters at any concentration that causes impairment of beneficial uses."

It is impracticable to use a 7-day average or a 30-day average limitation, because it will not protect beneficial uses, which requires a daily maximum limitation. Chlorine is very toxic to aquatic life and short term exposures of chlorine may cause fish kills. The San Jose Creek WRP has been able to meet this limit.

REVISED TENTATIVE

vi. **Total Dissolved Solids (TDS), Chloride, Sulfate, and Boron**

The limitations for total dissolved solids, chloride, sulfate, and boron are based on Basin Plan Table 3-10(page 3-32), for the San Gabriel River watershed . For Discharge Points Nos. 001A, 001B, 002 and 003 which lie between Valley Boulevard and Firestone Boulevard, the limitation in the San Gabriel River for TDS is 750 mg/L; for chloride is 180 mg/L; for sulfate is 300 mg/L and for boron is 1.0 mg/L. For Discharge Points Nos. 004 and 005 which lie between Morris Dam and Valley Boulevard, the limitation in the San Gabriel River for TDS is 450 mg/L; for chloride is 100 mg/L; for sulfate is 100 mg/L; and for boron is 0.5 mg/L. Consistent with the approach that was used in the USEPA-promulgated SGR Metals TMDL, Discharge Point 001 is considered as though it discharged to Reach 1. Therefore, no limits for TDS, sulfate, chloride, or boron are established for Discharge Point No. 001. The chloride limit resulted from Regional Water Board Resolution No. 97-02, Amendment to the Water Quality Control Plan to incorporate a Policy for Addressing Levels of Chloride in Discharges of Wastewaters. Resolution 97-02 was adopted by Regional Water Board on January 27, 1997; approved by SWRCB (Resolution 97-94); and, approved by OAL on January 8, 1998; and served to revise the chloride water quality objective in the San Gabriel River and other surface waters. It is practicable to express these limits as monthly averages, since they are not expected to cause acute effects on beneficial uses.

Limits based upon the Basin Plan Objectives have been included in this Order because, based upon Best Professional Judgment, these constituents are always present in potable water which is the supply source of the wastewater entering the Treatment Facility. They may be present in concentrations which meet California drinking water standards but exceed the Basin Plan Objectives. Therefore, limitations are warranted to protect the beneficial uses of the receiving water.

vii. **Methylene Blue Activated Substances (MBAS)**

The existing permit effluent limitation of 0.5 mg/l for Methylene Blue Activated Substances (MBAS) was developed based on the Basin Plan incorporation of Title 22, Drinking Water Standards, by reference, to protect the surface water groundwater recharge (GWR) beneficial use and the groundwater basin's MUN beneficial use.

Cobalt thiocyanate active substances (CTAS) is monitored like MBAS. The presence or absence of CTAS during sampling assists permit writers and the Permittee in diagnosing the source of floating materials, such as foam or scum, which are prohibited by the Basin Plan when they cause nuisance of adversely affect beneficial uses. There is no limit or compliance requirement for CTAS.

Reaches of the San Jose Creek and San Gabriel River are unlined in several reaches downstream of the points of wastewater discharge and are designated with the beneficial use of groundwater recharge (GWR) in the Basin Plan. Given the nature of the Facility which accepts domestic wastewater into the sewer system and treatment plant, and the characteristics of the pollutants discharged, the discharge has reasonable potential to exceed both the numeric MBAS WQO and the narrative WQO for the prohibition of floating material such

REVISED TENTATIVE

as foams and scums. Monitoring is required to assess compliance with the Basin Plan Water Quality Objectives and those objectives which are based on the incorporation by reference of the MCLs contained in Title 22 of the California Code of Regulations, for the protection of the underlying groundwater quality with the MUN beneficial use. An effluent limit for MBAS is required.

viii. **Total Inorganic Nitrogen (NO2 as N + NO3 as N + Ammonia as N)**

Total inorganic nitrogen is the sum of Nitrate-nitrogen, Nitrite-nitrogen and Ammonia-nitrogen. High nitrate levels in drinking water can cause health problems in humans. Infants are particularly sensitive and can develop methemoglobinemia (blue-baby syndrome). Nitrogen is also considered a nutrient. Excessive amounts of nutrients can lead to other water quality impairments.

(1). Algae

Excessive growth of algae and/or other aquatic plants can degrade water quality. Algal blooms sometimes occur naturally, but they are often the result of excess nutrients (i.e., nitrogen, phosphorus) from waste discharges or nonpoint sources. These algal blooms can lead to problems with tastes, odors, color, and increased turbidity and can depress the dissolved oxygen content of the water, leading to fish kills. Floating algal scum and algal mats are also an aesthetically unpleasant nuisance.

The WQO for biostimulatory substances are based on Basin Plan (page 3-8) narrative, “Waters shall not contain biostimulatory substances in concentrations that promote aquatic growth to the extent that such growth causes nuisance or adversely affects beneficial uses,” and other relevant information to arrive at a mass based-limit intended to be protective of the beneficial uses, pursuant to 40 CFR § 122.44(d). Total inorganic nitrogen will be the indicator parameter intended to control algae, pursuant to 40 CFR § 122.44(d)(1)(vi)(C).

(2). Concentration-based limit

Total inorganic nitrogen (NO2–N + NO3–N) effluent limitation of 8 mg/L is based on Basin Plan Table 3-10 (page 3-32, for San Gabriel River between Valley Boulevard and Firestone Boulevard and is applicable to Discharge Point EFF-001A, EFF-001B, EFF-003. This same limit applies to EFF-002 (San Jose Creek downstream of the 71 freeway) and to EFF-004 and EFF-005 (San Gabriel River between Morris Dam and Ramona Blvd).

(3). Mass-based limit

The mass emission rate for EFF-001, EFF-001A, and EFF-001B are based on the plant design flow rate of 100 mgd. The mass emission rate for EFF-003 are based on the plant design flow rate of 37.5 mgd

ix. **Nitrate and Nitrite as Nitrogen**

The effluent limits for nitrate as nitrogen of 10 mg/L and nitrite as nitrogen (NO_2-N) of 1.0 mg/L for EFF-001 are based on the Basin Plan narrative water

REVISED TENTATIVE

quality objectives and best professional judgment. Effluent limits for nitrate plus nitrite as total nitrogen of 8 mg/L for the other discharge points are based on the Basin Plan surface water quality criteria for San Gabriel River Reach 2 and San Jose Creek, as described in the previous section. The mechanism for reducing ammonia concentrations in the effluent involves the nitrification-denitrification treatment process, where the ammonia and organic nitrogen are oxidized to nitrite before final conversion to nitrate. Nitrite is converted to nitrate in the presence of oxygen. Therefore there is reasonable potential for nitrite or nitrate to be present in the discharge if the oxidation process is not complete.

$2NH_4$+ (ammonia) + $3O_2 \rightarrow 4H^+ + 2NO_2^-$ (nitrite) + H_2O (water)

$2NO_2^-$ (nitrite) + $O_2 \rightarrow 2NO_3^-$ (nitrate)

x. **Total Ammonia**

Ammonia is a pollutant routinely found in the wastewater effluent of POTWs, in landfill-leachate, as well as in run-off from agricultural fields where commercial fertilizers and animal manure are applied. Ammonia exists in two forms – un-ionized ammonia (NH_3) and the ammonium ion (NH_4^+). They are both toxic, but the neutral, un-ionized ammonia species (NH_3) is much more toxic, because it is able to diffuse across the epithelial membranes of aquatic organisms much more readily than the charged ammonium ion. The form of ammonia is primarily a function of pH, but it is also affected by temperature and other factors. Additional impacts can also occur as the oxidation of ammonia lowers the dissolved oxygen content of the water, further stressing aquatic organisms. Oxidation of ammonia to nitrate may lead to groundwater impacts in areas of recharge. There is groundwater recharge in these reaches. Ammonia also combines with chlorine (often both are present in POTW treated effluent discharges) to form chloramines – persistent toxic compounds that extend the effects of ammonia and chlorine downstream.

(1). **San Gabriel River Ammonia**

The 1994 Basin Plan contained water quality objectives for ammonia to protect aquatic life, in Tables 3-1 through Tables 3-4. However, those ammonia objectives were revised on April 25, 2002, by the Regional Water Board, with the adoption of Resolution No. 2002-011, Amendment to the Water Quality Control Plan for the Los Angeles Region to Update the Ammonia Objectives for Inland Surface Waters (including enclosed bays, estuaries and wetlands) with Beneficial Use designations for protection of Aquatic Life. Resolution No. 2002-011 was approved by the State Water Board, OAL, and USEPA on April 30, 2003, June 5, 2003, and June 19, 2003, respectively, and is now in effect.

On December 1, 2005, the Regional Water Board adopted Resolution No. 2005-014, An Amendment to the Water Quality Control Plan for the Los Angeles Region to Revise Early Life Stage Implementation Provision of the Freshwater Ammonia Objectives for Inland Surface Waters (including enclosed bays, estuaries and wetlands) for Protection of Aquatic Life. This amendment contains ammonia objectives to protect Early Life Stages

REVISED TENTATIVE

(ELS) of fish in inland surface water supporting aquatic life. This resolution was approved by the USEPA on April 5, 2007. This amendment revised the implementation provision included as part of the freshwater ammonia objectives relative to the protection of ELS of fish in inland surface waters.

(2). **Applicable Ammonia Objectives**

On June 7, 2007, the Regional Water Board adopted Resolution No. 2007-005, Amendments to the Water Quality Control Plan-Los Angeles Region-To Incorporate Site-Specific Objectives for Select Inland Surface Waters in the San Gabriel River, Los Angeles River and Santa Clara River Watersheds. This amendment to the Basin Plan incorporates site-specific 30-day average objectives for ammonia along with corresponding site-specific early life stage implementation provisions for select water body reaches and tributaries in the Santa Clara, Los Angeles, and San Gabriel River watersheds. Resolution No. 2007-005 was approved by the State Water Board, OAL, and USEPA on January 15, 2008, May 12, 2008, and March 30, 2009, respectively. It became operative on April 23, 2009. As part of its triennial review process, the Regional Board may reconsider the continued appropriateness of the site-specific objectives. The application of the SSO is not considered backsliding under Exception (2) of Section 402(o)(2) of the Clean Water Act 40 CFR § 122.44.

Translation of Ammonia Nitrogen Objectives into Effluent Limitations by applying the Ammonia SSO:

Discharge Point No. 002: For San Jose Creek (Discharge Point No. 002) from San Jose Creek East Facility when ELS are present and ELS are absent

Step 1 – Identify applicable water quality criteria.

The Permittee's effluent data is separated by time of year when ELS are present (from April 1 to September 30) and when ELS are absent (from October 1 to March 31), from 2009 to 2013:

ELS Present:
pH = 7.0 at 50th percentile and Temperature = 27.8°C
pH = 7.2 at 90th percentile

From Table 3-1 of the Basin Plan, using 90th percentile pH 7.2;
One-hour Average Objective = 29.54 mg/L

The Ammonia SSO formula replaces Table 3-2 of the Basin Plan.
Using 50th percentile pH 7.0 and temperature = 27.8°C;
30-day Average $_{\text{SSO ELA Present}}$ = 4.275 mg/L

REVISED TENTATIVE

From Basin Plan amendment Resolution No. 2002-011;
4-day Average Objective = 2.5 times the 30-Day Ave. Obj.
4-day Average Objective = 2.5 x 4.275 = 10.68 mg/L

ELS Absent:
pH = 7.0 at 50th percentile and Temperature = 23.9°C
pH = 7.1 at 90th percentile

From Table 3-1 of the Basin Plan, using 90th percentile pH 7.0;
One-hour Average Objective = 36.09 mg/L

The Ammonia SSO formula replaces Table 3-2 of the Basin Plan.
Using 50th percentile pH 7.0 and temperature = 23.9°C;
30-day Average $_{\text{SSO ELA Absent}}$ = 5.50 mg/L

From Basin Plan amendment Resolution No. 2002-011;
4-day Average Objective = 2.5 times the 30-Day Ave. Obj.
4-day Average Objective = 2.5 x 5.50 = 13.74 mg/L

Ammonia Water Quality Objectives (WQO) Summary ELS Present:

One-hour Average = 29.54 mg/L
Four-day Average = 10.68 mg/L
30-day Average $_{\text{all year long}}$ = 4.275 mg/L

Ammonia Water Quality Objectives (WQO) Summary ELS Absent:

One-hour Average = 36.09
Four-day Average = 13.74 mg/L
30-day Average $_{\text{all year long}}$ = 5.50mg/L

Step 2 – For each water quality objective, calculate the effluent concentration allowance (ECA) using the steady-state mass balance model. Since mixing has not been allowed by the Regional Water Board, this equation applies:

ECA = WQO

Step 3 – Determine the Long-Term Average discharge condition (LTA) by multiplying each ECA with a factor (multiplier) that adjust for variability. By using Table 3-6, calculated CV (i.e., standard deviation/mean for ammonia), the following are the Effluent Concentration Allowance.

ECA multiplier when CV = 0.1953 (ELS Present)
ECA multiplier$_{\text{One-hour Average}}$ = 0.6496
ECA multiplier$_{\text{Four-day Average}}$ = 0.8010
ECA multiplier$_{\text{30-day Average}}$ = 0.9210

REVISED TENTATIVE

ECA multiplier when CV = 0.1859 (ELS Absent)
ECA $multiplier_{One\text{-}hour\ Average}$ = 0.663
ECA $multiplier_{Four\text{-}day\ Average}$ = 0.809
ECA $multiplier_{30\text{-}day\ Average}$ = 0.924

Using the LTA equations:

ELS Present:
$LTA_{1\text{-}hour/99}$ = $ECA_{1\text{-}hour}$ x ELA Present ECA $multiplier_{1\text{-}hour99}$
= 29.54 x 0.6496 = 19.19 mg/L
$LTA_{4\text{-}day/99\ ELS\ Present}$ = $ECA_{4\text{-}day}$ x ELA Present ECA $multiplier_{4\text{-}day99}$
= 10.688 x 0.8010= 8.56 mg/L (extra significant figures added to remove rounding error which impacts the final limit calculation)
$LTA_{30\text{-}day/99\ ELS\ Present}$ = $ECA_{30\text{-}day}$ x ELA Present ECA $multiplier_{30\text{-}day99}$
= 4.275 x 0.9210 = 3.937 mg/L

ELS Absent:
$LTA_{1\text{-}hour/99}$ = $ECA_{1\text{-}hour}$ x ELA Absent ECA $multiplier_{1\text{-}hour99}$
= 36.09 x 0.663 = 21.77 mg/L
$LTA_{4\text{-}day/99\ ELS\ Absent}$ = $ECA_{4\text{-}day}$ x ELA Absent ECA $multiplier_{4\text{-}day99}$
= 13.74 x 0.809= 11.12 mg/L

$LTA_{30\text{-}day/99\ ELS\ Absent}$ = $ECA_{30\text{-}day}$ x ELA Absent ECA $multiplier_{30\text{-}day99}$
= 5.50 x 0.924 = 5.08 mg/L

Step 4 – Select the (most limiting) of the LTAs derived in Step 3 (LTA_{min})

ELS Present LTA_{min} = **3.94** mg/L
ELS Absent LTA_{min} = **5.08** mg/L

Step 5 – Calculate water quality based effluent limitation MDEL and AMEL by multiplying LTA_{min} as selected in Step 4, with a factor (multiplier) found in Table 3-7.

Monthly sampling frequency (n) is 30 times per month or less, and the minimum LTA is the $LTA_{30\text{-}day/99}$, therefore n = 30, ELS Present CV = .1930 and ELS Absent CV = .1859

ELS Present MDEL multiplier = 1.5394
ELA Present AMEL multiplier = 1.0597

ELS Absent MDEL multiplier = 1.51
ELA Absent AMEL multiplier = 1.06

REVISED TENTATIVE

ELS Present:
MDEL = LTA_{min} x MDEL $multiplier_{99}$ = 3.94x 1.5394 = 6.06
≈ 6.1 mg/L
AMEL = LTA_{min} x AMEL $multiplier_{95}$ = 3.94 x 1.0597 = 4.17
≈ 4.2 mg/L

ELS Absent:
MDEL = LTA_{min} x MDEL $multiplier_{99}$ = 5.08 x 1.51 = 7.67
≈ 7.7 mg/L
AMEL = LTA_{min} x AMEL $multiplier_{95}$ = 5.08 x 1.06 = 5.37
≈ 5.4 mg/L

Table F-9. Translated Ammonia Effluent Limitations with SSO Applied for San Jose Creek (Discharge Point No.002) from San Jose Creek East Facility

Constituent	MDEL (mg/L)	AMEL (mg/L)
Ammonia Nitrogen (ELS Present April 1 – September 30)	6.1	4.2
Ammonia Nitrogen (ELS Absent October 1 – March 31)	7.8	5.4

Discharge Point No. 003: For San Gabriel River (Discharge Point No. 003) from San Jose Creek West Facility and when ELS are present and ELS are absent

Step 1 – Identify applicable water quality criteria.

The Permittee's effluent data is separated by time of year when ELS are present (from December 2009 to January 2012) and when ELS are absent (from December 2009 to January 2012):

ELS Present:
pH = 7.15 at 50th percentile and Temperature = 27.2°C
pH = 7.22 at 90th percentile

From Table 3-1 of the Basin Plan, using 90th percentile pH 7.22;
One-hour Average Objective = 28.84 mg/L

The Ammonia SSO formula replaces Table 3-2 of the Basin Plan.
Using 50th percentile pH 7.15 and temperature = 27.2°C;
30-day Average $_{SSO\ ELA\ Present}$ = 4.16 mg/L

From Basin Plan amendment Resolution No. 2002-011;
4-day Average Objective = 2.5 times the 30-Day Ave. Obj.
4-day Average Objective = 2.5 x 4.16 = 10.41 mg/L

ELS Absent:
pH = 7.08 at 50th percentile and Temperature = 24.4°C
pH = 7.18 at 90th percentile

REVISED TENTATIVE

From Table 3-1 of the Basin Plan, using 90th percentile pH 7.08;
One-hour Average Objective = 30.21 mg/L

The Ammonia SSO formula replaces Table 3-2 of the Basin Plan.
Using 50th percentile pH 7.08 and temperature = 24.4°C;
30-day Average $_{\text{SSO ELA Absent}}$ = 5.15 mg/L

From Basin Plan amendment Resolution No. 2002-011;
4-day Average Objective = 2.5 times the 30-Day Ave. Obj.
4-day Average Objective = 2.5 x 5.15 = 12.88 mg/L

Ammonia Water Quality Objectives (WQO) Summary ELS Present:

One-hour Average = 28.84 mg/L
Four-day Average = 10.41 mg/L
30-day Average $_{\text{Present}}$ = 4.16 mg/L

Ammonia Water Quality Objectives (WQO) Summary ELS Absent:

One-hour Average = 30.21 mg/L
Four-day Average = 12.88 mg/L
30-day Average $_{\text{Absent}}$ = 5.15 mg/L

Step 2 – For each water quality objective, calculate the effluent concentration allowance (ECA) using the steady-state mass balance model. Since mixing has not been allowed by the Regional Water Board, this equation applies:

ECA = WQO

Step 3 – Determine the Long-Term Average discharge condition (LTA) by multiplying each ECA with a factor (multiplier) that adjust for variability. By using Table 3-6, calculated CV (i.e., standard deviation/mean for ammonia), the following are the Effluent Concentration Allowance.

ECA multiplier when CV = 0.2393 (ELS Present)
ECA multiplier$_{\text{One-hour Average}}$ = 0.5939
ECA multiplier$_{\text{Four-day Average}}$ = 0.7632
ECA multiplier$_{\text{30-day Average}}$ = 0.9043

ECA multiplier when CV = 0.2362 (ELS Absent)
ECA multiplier$_{\text{One-hour Average}}$ = 0.5976
ECA multiplier$_{\text{Four-day Average}}$ = 0.7658
ECA multiplier$_{\text{30-day Average}}$ = 0.9055

REVISED TENTATIVE

REVISED TENTATIVE

Using the LTA equations:

ELS Present:
$LTA_{1\text{-hour/99}}$ = $ECA_{1\text{-hour}}$ x ELA Present ECA $\text{multiplier}_{1\text{-hour99}}$
= 28.84 x 0.5939 = 17.13 mg/L
$LTA_{4\text{-day/99 ELS Present}}$ = $ECA_{4\text{-day}}$ x ELA Present ECA $\text{multiplier}_{4\text{-day99}}$
= 10.40 x 0.7632= 7.94 mg/L
$LTA_{30\text{-day/99 ELS Present}}$ = $ECA_{30\text{-day}}$ x ELA Present ECA $\text{multiplier}_{30\text{-day99}}$
= 4.16 x 0.9043 = 3.76 mg/L

ELS Absent:
$LTA_{1\text{-hour/99}}$ = $ECA_{1\text{-hour}}$ x ELA Absent ECA $\text{multiplier}_{1\text{-hour99}}$
= 30.21 x 0.5976 = 18.05 mg/L
$LTA_{4\text{-day/99 ELS Absent}}$ = $ECA_{4\text{-day}}$ x ELA Absent ECA $\text{multiplier}_{4\text{-day99}}$
= 12.88 x 0.7658= 9.86 mg/L
$LTA_{30\text{-day/99 ELS Absent}}$ = $ECA_{30\text{-day}}$ x ELA Absent ECA $\text{multiplier}_{30\text{-day99}}$
= 4.66 x 0.9055 = 4.66 mg/L

Step 4 – Select the (most limiting) of the LTAs derived in Step 3 (LTA_{min})

ELS Present LTA_{min} = **3.76** mg/L
ELS Absent LTA_{min} = **4.66** mg/L

Step 5 – Calculate water quality based effluent limitation MDEL and AMEL by multiplying LTA_{min} as selected in Step 4, with a factor (multiplier) found in Table 3-7.

Monthly sampling frequency (n) is 30 times per month or less, and the minimum LTA is the $LTA_{30\text{-day/99}}$, therefore n = 30, ELS Present CV = .2393 and ELS Absent CV = .2362

ELS Present MDEL multiplier = 1.6837
ELA Present AMEL multiplier = 1.0735

ELS Absent MDEL multiplier = 1.6733
ELA Absent AMEL multiplier = 1.0725

ELS Present:
MDEL = LTA_{min} x MDEL multiplier_{99} = 3.76x 1.6837 = 6.33
≈ 6.3 mg/L
AMEL = LTA_{min} x AMEL multiplier_{95} = 3.76 x 1.0735 = 4.04
≈ 4.0 mg/L

ELS Absent:
MDEL = LTA_{min} x MDEL $multiplier_{99}$ = 4.66 x 1.6733 = 7.80
≈ 7.8 mg/L
AMEL = LTA_{min} x AMEL $multiplier_{95}$ = 4.66 x 1.0725 = 5.00
≈ 5.0 mg/L

Table F-10. Translated Ammonia Effluent Limitations with SSO Applied for San Gabriel River (Discharge Point No. 003) from San Jose Creek West Facility

Constituent	MDEL (mg/L)	AMEL (mg/L)
Ammonia Nitrogen (ELS Present April 1 – September 30)	6.3	4.0
Ammonia Nitrogen (ELS Absent October 1 – March 31)	7.8	5.0

Discharge Point No. 004 and 005: For Discharge Point Nos. 004 and 005, for San Gabriel River Reaches 4 and 5, when ELS are absent

Step 1 – Identify applicable water quality criteria.

ELS Absent:
pH = 7.14 at 50th percentile and Temperature = 24.7°C
pH = 7.23 at 90th percentile

From Table 3-1 of the Basin Plan, using 90th percentile pH 7.23;
One-hour Average Objective = 28.54 mg/L

The Ammonia formula replaces Table 3-2 of the Basin Plan.
Using 50th percentile pH 7.14 and temperature = 24.7°C;
30-day Average $_{ELA\ Absent}$ = 2.88 mg/L

From Basin Plan amendment Resolution No. 2002-011;
4-day Average Objective = 2.5 times the 30-Day Ave. Obj.
4-day Average Objective = 2.5 x 2.88 = 7.21 mg/L

Ammonia Water Quality Objectives (WQO) Summary ELS Absent:

One-hour Average = 28.54 mg/L
Four-day Average = 7.21 mg/L
30-day Average $_{all\ year\ long}$ = 2.88 mg/L

Step 2 – For each water quality objective, calculate the effluent concentration allowance (ECA) using the steady-state mass balance model. Since mixing has not been allowed by the Regional Water Board, this equation applies:

ECA = WQO

REVISED TENTATIVE

Step 3 – Determine the Long-Term Average discharge condition (LTA) by multiplying each ECA with a factor (multiplier) that adjust for variability. By using Table 3-6, calculated CV (i.e., standard deviation/mean for ammonia), the following are the Effluent Concentration Allowance.

ECA multiplier when CV = 0.2355 (Year round)

ECA $multiplier_{One\text{-}hour\ Average}$ = 0.5984
ECA $multiplier_{Four\text{-}day\ Average}$ = 0.7664
ECA $multiplier_{30\text{-}day\ Average}$ = 0.9057

Using the LTA equations:

<u>ELS Absent:</u>

$LTA_{1\text{-}hour/99}$= $ECA_{1\text{-}hour}$ x ELA Present ECA $multiplier_{1\text{-}hour99}$ = 28.54 x 0.5984 = 17.08 mg/L
$LTA_{4\text{-}day/99\ ELS\ Present}$= $ECA_{4\text{-}day}$ x ELA Present ECA $multiplier_{4\text{-}day99}$ = 7.21 x 0.7664= 5.52 mg/L
$LTA_{30\text{-}day/99\ ELS\ Present}$ = $ECA_{30\text{-}day}$ x ELA Present ECA $multiplier_{30\text{-}day99}$ = 2.88 x 0.9057 = 2.61 mg/L

Step 4 – Select the (most limiting) of the LTAs derived in Step 3 (LTA_{min})

ELS Absent LTA_{min} = **2.61** mg/L

Step 5 – Calculate water quality based effluent limitation MDEL and AMEL by multiplying LTA_{min} as selected in Step 4, with a factor (multiplier) found in Table 3-7.

Monthly sampling frequency (n) is 30 times per month or less, and the minimum LTA is the $LTA_{30\text{-}day/99}$, therefore n = 30, Year round CV = .2355

ELS Absent MDEL multiplier = 1.671
ELA Absent AMEL multiplier = 1.072

<u>ELS Absent</u>:

MDEL = LTA_{min} x MDEL $multiplier_{99}$ = 2.61 x 1.671 = 4.37 ≈ 4.4 mg/L
AMEL = LTA_{min} x AMEL $multiplier_{95}$ = 2.61 x 1.072 = 2.801 ≈ 2.8 mg/L

Table F-11. Translated Ammonia Effluent Limitations for Discharge Points Nos. 004 and 005 in San Gabriel Reach 4 and Reach 5

Constituent	MDEL (mg/L)	AMEL (mg/L)
Ammonia Nitrogen (ELS Absent)	4.4	2.8

REVISED TENTATIVE

REVISED TENTATIVE

Discharge Point Nos. , 001A and 001B: For combined effluent outfall (Discharge Point Nos. 001A and 001B) in San Gabriel Reach 2 when ELS are present and ELS are absent

Step 1 – Identify applicable water quality criteria.

For Discharge Point Nos.001A and 001B, the one day average is calculated because the CV, ECA multipliers, and LTA will be different for the ELS absent data set and the ELS present data set. However, as discussed above, the one day average calculated without a SSO will be identical for the Discharge Point Nos. 001 and 001A data sets.

ELS Present:

pH = 7.2 at 50th percentile and Temperature = 27.0°C
pH = 7.36 at 90th percentile

From Table 3-1 of the Basin Plan, using 90th percentile pH 7.36;
One-hour Average Objective = 24.25 mg/L

The Ammonia SSO formula replaces Table 3-2 of the Basin Plan.
Using 50th percentile pH 7.2 and temperature = 27.0°C;
30-day Average $_{\text{SSO ELA Present}}$ = 4.1 mg/L

From Basin Plan amendment Resolution No. 2002-011;
4-day Average Objective = 2.5 times the 30-Day Ave. Obj.
4-day Average Objective = 2.5 x 4.1 = 10.26 mg/L (extra significant figures added to remove rounding error which impacts the final limit calculation)

ELS Absent:

pH = 7.2 at 50th percentile and Temperature = 23.9°C
pH = 7.42 at 90th percentile

From Table 3-1 of the Basin Plan, using 90th percentile pH 7.42;
One-hour Average Objective = 22.34 mg/L

The Ammonia SSO formula replaces Table 3-2 of the Basin Plan.
Using 50th percentile pH 7.2 and temperature = 23.9°C;
30-day Average $_{\text{SSO ELA Absent}}$ = 4.98 mg/L

From Basin Plan amendment Resolution No. 2002-011;
4-day Average Objective = 2.5 times the 30-Day Ave. Obj.
4-day Average Objective = 2.5 x 4.98 = 12.45 mg/L (extra significant figures added to remove rounding error which impacts the final limit calculation)

REVISED TENTATIVE

Ammonia Water Quality Objectives (WQO) Summary ELS Present:

One-hour Average = 24.25 mg/L
Four-day Average = 10.26 mg/L
30-day Average $_{\text{all year long}}$ = 4.1 mg/L

Ammonia Water Quality Objectives (WQO) Summary ELS Absent:

One-hour Average = 22.34 mg/L
Four-day Average = 12.45 mg/L
30-day Average $_{\text{all year long}}$ = 4.98 mg/L

Step 2 – For each water quality objective, calculate the effluent concentration allowance (ECA) using the steady-state mass balance model. Since mixing has not been allowed by the Regional Water Board, this equation applies:

ECA = WQO

Step 3 – Determine the Long-Term Average discharge condition (LTA) by multiplying each ECA with a factor (multiplier) that adjust for variability. By using Table 3-6, calculated CV (i.e., standard deviation/mean for ammonia), the following are the Effluent Concentration Allowance.

ECA multiplier when CV = 0.1953 (ELS Present)
ECA multiplier$_{\text{One-hour Average}}$ = 0.6269
ECA multiplier$_{\text{Four-day Average}}$ = 0.7859
ECA multiplier$_{\text{30-day Average}}$ = 0.9144

ECA multiplier when CV = 0.1859 (ELS Absent)
ECA multiplier$_{\text{One-hour Average}}$ = 0.6769
ECA multiplier$_{\text{Four-day Average}}$ = 0.8187
ECA multiplier$_{\text{30-day Average}}$ = 0.9286

Using the LTA equations:

ELS Present:

$LTA_{1\text{-hour/99}}$ = $ECA_{1\text{-hour}}$ x ELA Present ECA multiplier$_{1\text{-hour99}}$
= 24.25 x 0.6269 = 15.20 mg/L

$LTA_{4\text{-day/99 ELS Present}}$ = $ECA_{4\text{-day}}$ x ELA Present ECA multiplier$_{4\text{-day99}}$
= 10.26 x 0.7859= 8.07 mg/L

$LTA_{30\text{-day/99 ELS Present}}$ = $ECA_{30\text{-day}}$ x ELA Present ECA multiplier$_{30\text{-day99}}$
= 4.1 x 0.9144 = 3.75 mg/L

ELS Absent:
$LTA_{1\text{-hour}/99}$ = $ECA_{1\text{-hour}}$ x ELA Absent ECA $\text{multiplier}_{1\text{-hour}99}$
= 22.34 x 0.6769 = 15.12 mg/L
$LTA_{4\text{-day}/99\ \text{ELS Absent}}$ = $ECA_{4\text{-day}}$ x ELA Absent ECA $\text{multiplier}_{4\text{-day}99}$
= 12.45 x 0.8187= 10.196 mg/L
$LTA_{30\text{-day}/99\ \text{ELS Absent}}$ = $ECA_{30\text{-day}}$ x ELA Absent ECA $\text{multiplier}_{30\text{-day}99}$
= 4.98 x 0.9286 = 4.63 mg/L (extra significant figures added to remove rounding error which impacts the final limit calculation)

Step 4 – Select the (most limiting) of the LTAs derived in Step 3 (LTA_{min})

ELS Present LTA_{min} = **3.75** mg/L
ELS Absent LTA_{min} = **4.63** mg/L

Step 5 – Calculate water quality based effluent limitation MDEL and AMEL by multiplying LTA_{min} as selected in Step 4, with a factor (multiplier) found in Table 3-7.

Monthly sampling frequency (n) is 30 times per month or less, and the minimum LTA is the $LTA_{30\text{-day}/99}$, therefore n = 30, ELS Present CV = .1953 and ELS Absent CV = .1859

ELS Present MDEL multiplier = 1.5951
ELA Present AMEL multiplier = 1.0651

ELS Absent MDEL multiplier = 1.4774
ELA Absent AMEL multiplier = 1.0536

ELS Present:
MDEL = LTA_{min} x MDEL multiplier_{99} = 3.75 x 1.5951 = 5.9879
≈ 6.0 mg/L (extra significant figures added to remove rounding error which impacts the final limit calculation)
AMEL = LTA_{min} x AMEL multiplier_{95} = 3.75x 1.0651 = 3.998
≈ 4.0 mg/L

ELS Absent:
MDEL = LTA_{min} x MDEL multiplier_{99} = 4.63 x 1.4774 = 6.8339
≈ 6.8 mg/L
AMEL = LTA_{min} x AMEL multiplier_{95} = 4.63 x 1.0536 = 4.8738
≈ 4.9 mg/L

REVISED TENTATIVE

Table F-12. Translated Ammonia Effluent Limitations with SSO Applied for Combined Effluent Outfall (Discharge Point Nos. 001A and 001B) in San Gabriel Reach 2

Constituent	MDEL (mg/L)	AMEL (mg/L)
Ammonia Nitrogen (ELS Present April 1 – September 30)	6.0	4.0
Ammonia Nitrogen (ELS Absent October 1 – March 31)	6.8	4.9

Discharge Point Nos. 001: For combined effluent outfall (Discharge Point Nos. 001) in San Gabriel Reach 2, with limits established for the purpose of this Order for Reach 1, when ELS are absent

Step 1 – Identify applicable water quality criteria.

ELS Absent:
pH = 7.3 at 50th percentile and Temperature = 26.1°C
pH = 7.5 at 90th percentile

From Table 3-1 of the Basin Plan, using 90th percentile pH 7.5;
One-hour Average Objective = 19.89 mg/L

The Ammonia SSO formula replaces Table 3-2 of the Basin Plan.
Using 50th percentile pH 7.3 and temperature = 26.1°C;
30-day Average $_{\text{SSO ELA Absent}}$ = 5.54 mg/L

From Basin Plan amendment Resolution No. 2002-011;
4-day Average Objective = 2.5 times the 30-Day Ave. Obj.
4-day Average Objective = 2.5 x 5.54 = 13.86 mg/L

Ammonia Water Quality Objectives (WQO) Summary ELS Absent:

One-hour Average = 19.89 mg/L
Four-day Average = 13.86 mg/L
30-day Average $_{\text{all year long}}$ = 5.54 mg/L

Step 2 – For each water quality objective, calculate the effluent concentration allowance (ECA) using the steady-state mass balance model. Since mixing has not been allowed by the Regional Water Board, this equation applies:

ECA = WQO

Step 3 – Determine the Long-Term Average discharge condition (LTA) by multiplying each ECA with a factor (multiplier) that adjust for variability. By using Table 3-6, calculated CV (i.e., standard deviation/mean for ammonia), the following are the Effluent Concentration Allowance.

REVISED TENTATIVE

ECA multiplier when CV = 0.1859 (ELS Absent)
ECA multiplier$_{\text{One-hour Average}}$ = 0.654035
ECA multiplier$_{\text{Four-day Average}}$ = 0.803908
ECA multiplier$_{\text{30-day Average}}$ = 0.92226

Using the LTA equations:

ELS Absent:
$LTA_{1\text{-hour/99}}$= $ECA_{1\text{-hour}}$ x ELA Present ECA multiplier$_{1\text{-hour99}}$ = 19.89 x 0.654035 = 13.01 mg/L
$LTA_{4\text{-day/99 ELS Present}}$= $ECA_{4\text{-day}}$ x ELA Present ECA multiplier$_{4\text{-day99}}$ = 13.86 x 0.803908= 11.14 mg/L
$LTA_{30\text{-day/99 ELS Present}}$ = $ECA_{30\text{-day}}$ x ELA Present ECA multiplier$_{30\text{-day99}}$ = 5.66 x 0.922263 = 5.22 mg/L

Step 4 – Select the (most limiting) of the LTAs derived in Step 3 (LTA_{min})

ELS Absent LTA_{min} = **5.22** mg/L

Step 5 – Calculate water quality based effluent limitation MDEL and AMEL by multiplying LTA_{min} as selected in Step 4, with a factor (multiplier) found in Table 3-7.

Monthly sampling frequency (n) is 30 times per month or less, and the minimum LTA is the $LTA_{30\text{-day/99}}$, therefore n = 30, ELS Present CV = .1953 and ELS Absent CV = .1859

ELS Absent MDEL multiplier = 1.529
ELA Absent AMEL multiplier = 1.059

ELS Absent:
MDEL = LTA_{min} x MDEL multiplier$_{99}$ = 5.22 x 1.529 = 7.98 ≈ 8.0 mg/L
AMEL = LTA_{min} x AMEL multiplier$_{95}$ = 5.22 x 1.059 = 5.53 ≈ 5.5 mg/L

Table F-13. Translated Ammonia Effluent Limitations with SSO Applied for Combined Effluent Outfall (Discharge Point No. 001) in San Gabriel Reach 2 with Reach 1 Requirements Applied

Constituent	MDEL (mg/L)	AMEL (mg/L)
Ammonia Nitrogen (ELS Absent)	6.0	4.0

(3). **Receiving Water Ammonia Limitation**

On March 2, 2011, the Regional Water Board approved the ammonia receiving water monitoring location based on the study conducted by the Permittee. The study concluded that the ammonia compliance monitoring

REVISED TENTATIVE

shall be conducted 100 feet below the outfall. To ensure that downstream receiving waters are protected at all times, the Discharger shall monitor the ammonia concentrations at RSW-002, RSW-004, RSW-005, RSW-006, RSW-007, RSW-009 and RSW-011 as described in the MRP, 100 feet from the discharge outfall. The purpose of the monitoring location is to ensure that ammonia water quality objectives are met in the receiving water, even immediately downstream of the discharge when there has been little time for uptake or volatilization of ammonia in the receiving water. Concurrent sampling of ammonia, pH, and temperature will be required at this monitoring location. The Discharger shall compare the ammonia results to Basin Plan ammonia water quality objectives, based on the real-time pH and temperature data collected at the time of ammonia sampling.

Table F-14. Summary of all Ammonia Nitrogen Effluent Limitations

Discharge Points	Conditions	MDEL (mg/L)	AMEL (mg/L)
No. 002 into San Jose Creek	ELS Present April 1 – September 30	6.1	4.2
	ELS Absent Oct 1 – March 31	7.8	5.4
No. 003 into San Gabriel River	ELS Present April 1 – September 30	6.3	4.0
	ELS Absent Oct 1 – March 31	7.8	5.0
Nos. 004 and 005 into the San Gabriel River	ELS Absent Year Round	4.4	2.8
Nos. 001, 001A and 001B into San Gabriel Reach 2	ELS Present April 1 – September 30	6.0	4.0
	ELS Absent Oct 1 – March 31	6.8	4.9
No. 001 into San Gabriel Reach 2 (With limits based on Reach 1 hydrological conditions)	ELS Absent all year	5.5	8

xi. Coliform

Total and fecal coliform bacteria are used to indicate the likelihood of pathogenic bacteria in surface waters. Given the nature of the Facility, a wastewater treatment plant, pathogens are likely to be present in the effluent in cases where the disinfection process is not operating adequately. As such, the permit contains the following:

(1). Effluent Limitations:

(a) The 7-day median number of total coliform bacteria at some point at the end of the UV channel, during normal operation of the UV channel, and at the end of the chlorine contact chamber, when backup method is used, must not exceed a Most Probable Number (MPN) or Colony Forming Unit (CFU) of 2.2 per 100 milliliters,

REVISED TENTATIVE

(b) The number of total coliform bacteria must not exceed an MPN or CFU of 23 per 100 milliliters in more than one sample within any 30-day period; and

(c) No sample shall exceed an MPN of CFU of 240 total coliform bacteria per 100 milliliters.

These disinfection-based effluent limitations for coliform are for human health protection and are consistent with requirements established by the California Department of Public Health. These limits for coliform must be met at the point of the treatment train immediately following disinfection, as a measure of the effectiveness of the disinfection process.

(2). Receiving Water Limitations:

(a) Geometric Mean Limitations

E.coli density shall not exceed 126/100 mL.

(b) Single Sample Limitations

E.coli density shall not exceed 235/100 mL.

These receiving water limitations are based on Resolution No. R10-005, *Amendment to the Water Quality Control Plan for the Los Angeles Region to Update the Bacteria Objectives for Freshwaters Designated for Water Contact Recreation by Removing the Fecal Coliform Objective*, adopted by the Regional Water Board on July 8, 2010, and became effective on December 5, 2011.

xii. Temperature

USEPA document, Quality Criteria for Water 1986 [EPA 440/5-86-001, May 1, 1986], also referred to as the Gold Book, discusses temperature and its effects on beneficial uses, such as recreation and aquatic life.

(1). The Federal Water Pollution Control Administration in 1967 called temperature “a catalyst, a depressant, an activator, a restrictor, a stimulator, a controller, a killer, and one of the most important water quality characteristics to life in water.” The suitability of water for total body immersion is greatly affected by temperature. Depending on the amount of activity by the swimmer, comfortable temperatures range from 20°C to 30°C (68 °F to 86 °F).

(2). Temperature also affects the self-purification phenomenon in water bodies and therefore the aesthetic and sanitary qualities that exist. Increased temperatures accelerate the biodegradation of organic material both in the overlying water and in bottom deposits which makes increased demands on the dissolved oxygen resources of a given system. The typical situation is exacerbated by the fact that oxygen becomes less soluble as water temperature increases. Thus, greater demands are exerted on an

REVISED TENTATIVE

increasingly scarce resource which may lead to total oxygen depletion and obnoxious septic conditions. Increased temperature may increase the odor of water because of the increased volatility of odor-causing compounds. Odor problems associated with plankton may also be aggravated.

(3). (c) Temperature changes in water bodies can alter the existing aquatic community. Coutant (1972) has reviewed the effects of temperature on aquatic life reproduction and development. Reproductive elements are noted as perhaps the most thermally restricted of all life phases assuming other factors are at or near optimum levels. Natural short-term temperature fluctuations appear to cause reduced reproduction of fish and invertebrates.

The Basin Plan lists temperature requirements for the receiving waters. Based on the requirements of the Basin Plan and a white paper developed by Regional Water Board staff entitled Temperature and Dissolved Oxygen Impacts on Biota in Tidal Estuaries and Enclosed Bays in the Los Angeles Region, a maximum effluent temperature limitation of 86°F is included in the Order. The white paper evaluated the optimum temperatures for steelhead, topsmelt, ghost shrimp, brown rock crab, jackknife clam, and blue mussel. The new temperature effluent limitation is reflective of new information available that indicates that the 100°F temperature which was formerly used in permits was not protective of aquatic organisms. A survey was completed for several kinds of fish and the 86°F temperature was found to be protective. It is impracticable to use a 7-day average or a 30-day average limitation for temperature, because it is not as protective as of beneficial uses as a daily maximum limitation is. A daily maximum limit is necessary to protect aquatic life and is consistent with the fishable/swimmable goals of the CWA.

Section IV.E.2. of the Order contains the following effluent limitation for temperature:

“The temperature of wastes discharged shall not exceed 86°F except as a result of external ambient temperature.”

The above effluent limitation for temperature has been quoted in all recent NPDES permits adopted by this Regional Water Board. Section V.A.1. of the Order explains how compliance with the receiving water temperature limitation will be determined.

xiii. Turbidity

Turbidity is an expression of the optical property that causes light to be scattered in water due to particulate matter such as clay, silt, organic matter, and microscopic organisms. Turbidity can result in a variety of water quality impairments. The effluent limitation for turbidity which reads, “For the protection of the water contact recreation beneficial use, the discharge to water courses shall have received adequate treatment, so that the turbidity of the wastewater does not exceed: (a) a daily average of 2 Nephelometric turbidity units (NTU); (b) 5 NTU more than 5 percent of the time (72 minutes) during any 24 hour period; and (c) 10 NTU at any time” is based on the Basin Plan (page 3-17) and section 60301.320 of Title 22, chapter 3, “Filtered Wastewater” of the CCR.

REVISED TENTATIVE

xiv. Radioactivity

Radioactive substances are generally present in natural waters in extremely low concentrations. Mining or industrial activities increase the amount of radioactive substances in waters to levels that are harmful to aquatic life, wildlife, or humans. Section 301(f) of the CWA contains the following statement with respect to effluent limitations for radioactive substances: "Notwithstanding any of other provisions of this Act it shall be unlawful to discharge any radiological, chemical, or biological warfare agent, any high-level radioactive waste, or any medical waste, into the navigable waters." Chapter 5.5 of the CWC contains a similar prohibition under section 13375, which reads as follows: "The discharge of any radiological, chemical, or biological warfare agent into the waters of the state is hereby prohibited." However, rather than an absolute prohibition on radioactive substances, Regional Water Board staff have set the following effluent limit for radioactivity: "Radioactivity of the wastes discharged shall not exceed the limits specified in Title 22, Chapter 15, Article 5, sections 64442 and 64443, of the CCR, or subsequent revisions." The limit is based on the Basin Plan incorporation of Title 22, CCR, Drinking Water Standards, by reference, to protect the GWR beneficial use. Therefore, the accompanying Order will retain the limit for radioactivity.

c. CTR and SIP

The CTR and the SIP specify numeric objectives for toxic substances and the procedures whereby these objectives are to be implemented. The procedures include those used to conduct reasonable potential analysis (RPA) to determine the need for effluent limitations for priority pollutants. The TSD also specifies procedures to conduct reasonable potential analyses.

3. Determining the Need for WQBELs

The Regional Water Board developed a WQBEL for copper, lead and selenium based upon *Total Maximum Daily Loads for Metals and Selenium in the San Gabriel River and Impaired Tributaries* (TMDL or San Gabriel River Metals TMDL). The effluent limitations for these pollutants were established regardless of whether or not there is reasonable potential for the pollutant to be present in the discharge at levels that would cause or contribute to a violation of water quality standards. The Regional Water Board developed water quality-based effluent limitations for these pollutants pursuant to Part 122.44(d)(1)(vii), which does not require or contemplate a reasonable potential analysis. Similarly, the SIP at Section 1.3 recognizes that reasonable potential analysis is not appropriate if a TMDL has been developed.

In accordance with Section 1.3 of the SIP, the Regional Water Board conducted a reasonable potential analysis for each priority pollutant with an applicable criterion or objective to determine if a WQBEL is required in the permit. The Regional Water Board analyzed effluent data to determine if a pollutant in a discharge has a reasonable potential to cause or contribute to an excursion above a state water quality standard. For all parameters that demonstrate reasonable potential, numeric WQBELs are required. The RPA considers water quality criteria from the CTR and NTR, and when applicable, water quality objectives specified in the Basin Plan. To conduct the RPA, the Regional Water Board staff identified the maximum effluent concentration (MEC) and maximum background concentration in the receiving water for each constituent, based

REVISED TENTATIVE

on data provided by the Permittee. The monitoring data cover the period from July 2009 to September 2013.

The RPA analysis requires a comparison between the criteria and the background conditions as defined by receiving water concentrations. San Jose Creek and the San Gabriel River are effluent dominated waterbodies, as such, an abundance of receiving water data may be lacking. Therefore, staff used whatever upstream receiving water data was available to conduct RPA...

Section 1.3 of the SIP provides the procedures for determining reasonable potential to exceed applicable water quality criteria and objectives. The SIP specifies three triggers to complete a RPA:

Trigger 1 – If the MEC is greater than or equal to the CTR water quality criteria or applicable objective (C), a limitation is needed.

Trigger 2 – If background water quality (B) > C and the pollutant is detected in the effluent, a limitation is needed.

Trigger 3 – If other related information such as CWA 303(d) listing for a pollutant, discharge type, compliance history is pertinent, then best professional judgment is used to determine that a limit is needed.

Sufficient effluent and ambient data are needed to conduct a complete RPA. If data are not sufficient, the Permittee will be required to gather the appropriate data for the Regional Water Board to conduct the RPA. Upon review of the data, and if the Regional Water Board determines that WQBELs are needed to protect the beneficial uses, the permit will be reopened for appropriate modification.

The RPA was performed for the priority pollutants regulated in the CTR for which data are available and no priority pollutants demonstrated reasonable potential based on effluent concentration alone.

The CTR and the SIP specify numeric objectives for toxic substances and the procedures whereby these objectives are to be implemented. The procedures include those used to conduct reasonable potential analysis (RPA) to determine the need for effluent limitations for priority pollutants. The USEPA Technical Support Document (TSD) also specifies procedures to conduct reasonable potential analyses which are used for pollutants that are not priority pollutants. The TSD RPA may also be used for pollutants that have non-CTR based water quality objectives. Based on upstream receiving water conditions, the RPA indicated that limits are needed for Discharge Point Nos. 001/001A/001B, 002,003, 004 and 005 for Chrysene, Dibenzo(a,h)anthracene, Benzo(k)fluoranthene, and/or Indeno (1,2,3-cd) Pyrene. Based on receiving water conditions, the RPA indicated that limits are needed for Discharge Serial Nos. 004 and 005 for Arsenic, Copper and Selenium because the discharge could contribute to an exceedance of the Basin Plan water quality objective.

Total trihalomethanes data showed reasonable potential to cause or contribute to an exceedance of the Basin Plan Water Quality Objective, using the TSD methodology, for effluent from East and from the West San Jose Creek WRP. As a result, total trihalomethanes are limited at Discharge Point Nos. 001A/001B, 002 003, 004 and 005. Limits were set to protect Basin Plan Water Quality Objectives for Ammonia, Nitrate plus Nitrite and Nitrite because the facility has tier 3 RPA due to the nature of the facility as a publicly owned treatment works (POTW) and the influent composition entering the

REVISED TENTATIVE

POTW.. No reasonable potential was found for other Basin Plan objectives such as Bis(2-ethylhexyl)phthalate.

RPA was not present at any discharge points for lead, but a limit was required for all the discharge points except for EFF-001 because they are either in or tributary to San Gabriel River Reach 2, where a San Gabriel Metals and Selenium TMDL limit is specified.

Discharge Point No. 001:

- A limit is needed for copper based on the 18μg/L dry weather WLA for Reach 1 of the San Gabriel River contained in the San Gabriel River Metals TMDL. Although outfall 001 is in Reach 2, it discharges to a concrete-lined section that is 920 feet upstream of Reach 1. Moreover, the TMDL WLA applicable to Reach 1 of the San Gabriel River (referred to as SGR1) was developed taking into account the load from Outfall 001, as described in section 4.1.2 - the Source Assessment section of the TMDL (on page 23) and in Table 4-4 of section 4.3 – Quantification of Sources (on page 27) of the TMDL.
- Tier 2 RPA is present for Benzo(k)fluoranthene, Dibenzo(a,g) anthracene, and indeno(1,2,3-cd)pyrene because receiving water concentrations exceeded the applicable criteria and the pollutants were present in the effluent.
- Tier 1 RPA is present for chronic toxicity because the individual effluent chronic toxicity data exceeded the 1 TUc trigger.

Discharge Points Nos. 001A and 001B:

- A limit for lead is needed based on the 166 μg/L wet weather WLA for Reach 2 of the San Gabriel River contained in the San Gabriel River Metals TMDL. The San Gabriel River Metals TMDL contains wet weather WLAs for SGR Reach 2 and all upstream reaches and tributaries. The TMDL specifies that only a Daily Maximum limit should be calculated for lead, under wet weather conditions.
- Tier 2 RPA is present for Copper, Benzo(k)fluoranthene, Dibenzo(a,h) anthracene, and indeno(1,2,3-cd)pyrene because receiving water concentrations exceeded the applicable criteria and the pollutants were present in the effluent.
- Tier 1 RPA is present for total trihalomethanes as described in the TSD RP calculations.
- Tier 1 RPA is present for chronic toxicity because the individual effluent chronic toxicity data exceeded the 1 TUc trigger.

Discharge Point No. 002:

- A limit for selenium is needed based on the 5 μg/L dry weather WLA for Reaches 1 & 2 of the San Jose Creek, contained in the San Gabriel River Metals TMDL. Permit writers translated the applicable selenium WLA into effluent limits.
- A limit for lead is needed based on the 166 μg/L wet weather WLA for Reach 2 of the San Gabriel River contained in the San Gabriel River Metals TMDL. The San Gabriel River Metals TMDL contains wet weather WLAs for SGR Reach 2

REVISED TENTATIVE

and all upstream reaches and tributaries. The TMDL specifies that only a Daily Maximum limit should be calculated for lead, under wet weather conditions.

- Tier 2 RPA is present for Chrysene, Benzo(k)fluoranthene, Dibenzo(a,h) anthracene, and indeno(1,2,3-cd)pyrene because receiving water concentrations exceeded the applicable criteria and the pollutants were present in the effluent.
- Tier 1 RPA is present for total trihalomethanes as described in the TSD RP calculations.
- Tier 1 RPA is present for chronic toxicity because the individual effluent chronic toxicity data exceeded the 1 TUc trigger.

Discharge Point No. 003:

- A limit is needed for lead based on the 166 μg/L wet weather WLA for Reach 2 of the San Gabriel River contained in the San Gabriel River Metals TMDL. The TMDL specifies that only a Daily Max limit should be calculated under wet weather conditions.
- Tier 2 RPA is present for Dibenzo(a,h) anthracene, receiving water concentrations exceeded applicable criteria and the pollutant was present in the effluent.
- Tier 1 RPA is present for total trihalomethanes as described in the TSD RP calculations.
- Tier 1 RPA is present for chronic toxicity because the individual effluent chronic toxicity data exceeded the 1 TUc trigger.

Discharge Points Nos. 004 and 005:

- A limit is needed for lead based on the 166 μg/L wet weather WLA for Reach 2 of the San Gabriel River and upstream reaches, contained in the San Gabriel River Metals TMDL. The TMDL specifies that only a Daily Maximum limit should be calculated under wet weather conditions.
- A limit is needed for arsenic to protect the GWR beneficial use for this reach. Tier 2 RPA is present because background concentrations exceed the groundwater objective and the pollutant was present in the effluent.
- A limit is needed for copper. Tier 2 RPA is present because the background receiving water concentration exceeds the CTR aquatic life criteria based on a hardness of 266 mg/L from RSW-004, and the pollutant was present in the effluent.
- A limit for selenium is also needed. Tier 2 RPA is present because the background receiving water concentration exceeds the criteria and the pollutant was present in the effluent.
- Tier 2 RPA is present for Dibenzo(a,h) anthracene, receiving water concentrations, where measures are available, exceeded applicable criteria and the pollutant was present in the effluent.
- Tier 1 RPA is present for total trihalomethanes as described in the TSD RP calculations.

REVISED TENTATIVE

- Tier 1 RPA is present for chronic toxicity because the individual effluent chronic toxicity data exceeded the 1 TUc trigger.

The following Table summarizes results from RPA for San Jose Creek East discharge at EFF-002.

Table F-15. Summary of Reasonable Potential Analysis for CTR Based Priority Pollutants at EFF-002

CTR No.	Constituent	Applicable Water Quality Criteria (C) µg/L	Max Effluent Conc. (MEC) µg/L	Maximum Detected Receiving Water Conc.(B) µg/L[8]	RPA Result - Need Limitation?	Reason
1	Antimony	6	0.7	0.62	No	MEC<C
2	Arsenic	10	1.9	2.41	No	MEC<C
3	Beryllium	4	<.25	<.25	No	Not detected
4	Cadmium	14.31	0.26	<.2	No	MEC<C
5a	Chromium III	4019	1.63	3.6	No	MEC<C
5b	Chromium VI	11	0.13	3.26	No	MEC<C
6	Copper	36.68	6.57	7.86	No	MEC<C
7	**Lead**	300	0.79	1.38	**Yes**	**TMDL WLA**
8	Mercury	0.051	0.0029	<.04	No	MEC<C
9	Nickel	1114.28	10.6	3.37	No	MEC<C
10	**Selenium**	5	0.85	4.88	**Yes**	**TMDL WLA**
11	Silver	23.56	<0.1	<0.2	No	MEC<C
12	Thallium	2	<0.25	<.25	No	Not detected
13	Zinc	284.94	77.8	39.4	No	MEC<C
14	Cyanide	5.2	<5	<5	No	MEC<C
15	Asbestos	7x106 fibers/L	No sample		No	N/A
16	2,3,7,8-TCDD (Dioxin)	1.4E-8	<1.1E-8	<1.1E-8	No	Not detected
17	Acrolein	780	1	<2	No	MEC<C
18	Acrylonitrile	0.66	<2	<2	No	Not detected
19	Benzene	1	<.5	<.5	No	Not detected
20	Bromoform	360	1.6	<.5	No	MEC<C
21	Carbon Tetrachloride	0.5	<.25	<.5	No	Not detected
22	Chlorobenzene	21,000	<.5	<.5	No	Not detected
23	Dibromochloromethane	34	9.8	<.5	No	MEC<C
24	Chloroethane	No criteria	<.5	<.5	No	No criteria

[8] Highest value measured at receiving water monitoring point immediately upstream at RSW-001 (C-1).

REVISED TENTATIVE

CTR No.	Constituent	Applicable Water Quality Criteria (C) µg/L	Max Effluent Conc. (MEC) µg/L	Maximum Detected Receiving Water Conc.(B) µg/L[8]	RPA Result - Need Limitation?	Reason
25	2-chloroethyl vinyl ether	No criteria	<.5	<.5	No	No criteria
26	Chloroform	No criteria	37.2	<.5	No	No criteria
27	Dichlorobromomethane	46	26.4	<.5	No	MEC<C
28	1,1-dichloroethane	5	<.5	<.5	No	No criteria
29	1,2-dichloroethane	0.5	<.5	<.5	No	Not detected
30	1,1-dichloroethylene	3.2	<.5	<.5	No	Not detected
31	1,2-dichloropropane	5	<.5	<.5	No	Not detected
32	1,3-dichloropropylene	0.5	<.5	<.5	No	Not detected
33	Ethylbenzene	0.3	<0.5	<.5	No	Not detected
34	Methyl bromide	4,000	<.5	<.5	No	Not detected
35	Methyl chloride	No criteria	<.25	<.5	No	No criteria
36	Methylene chloride	1,600	0.35	<.5	No	MEC<C
37	1,1,2,2-Tetrachloroethane	1	<.5	<.5	No	Not detected
38	Tetrachloroethylene	5	<.5	<.5	No	Not detected
39	Toluene	150	<.5	6	No	B<C
40	Trans 1,2-Dichloroethylene	10	<.5	<.5	No	Not detected
41	1,1,1-Trichloroethane	200	<.5	<.5	No	Not detected
42	1,1,2-Trichloroethane	5	<.5	<.5	No	Not detected
43	Trichloroethylene	5	<.5	<.5	No	Not detected
44	Vinyl Chloride	0.5	<.5	<.5	No	Not detected
45	2-chlorophenol	400	<.5	<.5	No	Not detected
46	2,4-dichlorophenol	790	<.5	<.5	No	Not detected
47	2,4-dimethylphenol	2,300	<.5	<2	No	Not detected
48	4,6-dinitro-o-resol(aka 2-methyl-4,6-Dinitrophenol)	765	<.5	<.5	No	Not detected
49	2,4-dinitrophenol	14,000	<2	<.5	No	Not detected

REVISED TENTATIVE

CTR No.	Constituent	Applicable Water Quality Criteria (C) µg/L	Max Effluent Conc. (MEC) µg/L	Maximum Detected Receiving Water Conc.(B) µg/L[8]	RPA Result - Need Limitation?	Reason
50	2-nitrophenol	No criteria	<.5	<10	No	Not detected
51	4-nitrophenol	No criteria	<.5	<10	No	Not detected
52	3-Methyl-4-Chlorophenol (aka P-chloro-m-resol)	No criteria	<.5	<1	No	Not detected
53	Pentachlorophenol	1	<.5	<1	No	Not detected
54	Phenol	4,600,000	3.7	2.3	No	MEC<C
55	2,4,6-trichlorophenol	6.5	<10	<10	No	Not detected
56	Acenaphthene	2,700	<1	<1	No	Not detected
57	Acenaphthylene	No criteria	<10	<10	No	Not detected
58	Anthracene	110,000	<10	<10	No	Not detected
59	Benzidine	0.00054	<.2	<.02	No	Not detected
60	Benzo(a)Anthracene	0.049	<5	<5	No	Not detected
61	Benzo(a)Pyrene	0.049	<.02	<.02	No	Not detected
62	Benzo(b)Fluoranthene	0.049	0.01	<0.02	No	MEC<C
63	Benzo(ghi)Perylene	No criteria	<5	<5	No	No criteria
64	**Benzo(k) Fluoranthene**	0.049	0.014	0.13	**Yes**	**B>C and detected in effluent**
65	Bis(2-Chloroethoxy) methane	No criteria	<5	<5	No	No criteria
66	Bis(2-Chloroethyl)Ether	1.4	<1	<1	No	Not detected
67	Bis(2-Chloroisopropyl) Ether	170,000	<2	<2	No	Not detected
68	Bis(2-Ethylhexyl) Phthalate	4.0	<2	<2	No	Not detected
69	4-Bromophenyl phenyl ether	No criteria	<5	<5	No	No criteria
70	Butylbenzyl Phthalate	5,200	<10	<10	No	Not detected
71	2-Chloronaphthalene	4,300	<10	<10	No	Not detected
72	4-Chlorophenyl Phenyl Ether	No criteria	<5	<5	No	No criteria

REVISED TENTATIVE

CTR No.	Constituent	Applicable Water Quality Criteria (C) µg/L	Max Effluent Conc. (MEC) µg/L	Maximum Detected Receiving Water Conc.(B) µg/L[8]	RPA Result - Need Limitation?	Reason
73	**Chrysene**	0.049	.011	0.12	**Yes**	**B>C and detected in effluent**
74	**Dibenzo(a,h)anthracene**	0.049	0.03	0.63	**Yes**	**B>C and detected in effluent**
75	1,2-Dichlorobenzene	600	<.5	<5	No	Not detected
76	1,3-Dichlorobenzene	2,600	<0.16	<.5	No	Not detected
77	1,4-Dichlorobenzene	5	0.3	<.5	No	MEC<C
78	3-3'-Dichlorobenzidine	0.077	<5	<5	No	Not detected
79	Diethyl Phthalate	120,000	1	<2	No	MEC<C
80	Dimethyl Phthalate	2,900,000	<2	<2	No	MEC<C
81	Di-n-Butyl Phthalate	12,000	<10	<10	No	MEC<C
82	2-4-Dinitrotoluene	9.1	<5	<5	No	Not detected
83	2-6-Dinitrotoluene	No criteria	<5	<5	No	No criteria
84	Di-n-Octyl Phthalate	No criteria	<10	<10	No	Not detected
85	1,2-Diphenylhydrazine	0.54	<1	<1	No	Not detected
86	Fluoranthene	370	<1	<5	No	Not detected
87	Fluorene	14,000	<10	<5	No	Not detected
88	Hexachlorobenzene	0.00077	<1	<10	No	Not detected
89	Hexachlorobutadiene	50	<1	<1	No	Not detected
90	Hexachlorocyclopenta-diene	17,000	<5	<1	No	Not detected
91	Hexachloroethane	8.9	<1	<10	No	Not detected
92	**Indeno(1,2,3-cd) Pyrene**	0.049	0.026	.088	**Yes**	**B>C and detected in effluent**
93	Isophorone	600	<1	<1	No	Not detected
94	Naphthalene	No criteria	<1	<1	No	No criteria
95	Nitrobenzene	1,900	<1	<5	No	Not detected
96	N-Nitrosodimethylamine	8.1	0.36	<5	No	MEC<C

REVISED TENTATIVE

CTR No.	Constituent	Applicable Water Quality Criteria (C) µg/L	Max Effluent Conc. (MEC) µg/L	Maximum Detected Receiving Water Conc.(B) µg/L[8]	RPA Result - Need Limitation?	Reason
97	N-Nitrosodi-n-Propylamine	1.4	<5	<5	No	Not detected
98	N-Nitrosodiphenylamine	16	<1	<1	No	Not detected
99	Phenanthrene	No criteria	<5	<5	No	Not detected
100	Pyrene	11,000	<10	<10	No	Not detected
101	1,2,4-Trichlorobenzene	No criteria	<5	<5	No	Not detected
102	Aldrin	0.00014	<.01	<.01	No	Not detected
103	Alpha-BHC	0.013	<.01	<.01	No	Not detected
104	Beta-BHC	0.046	<.01	<.01	No	Not detected
105	Gamma-BHC (aka Lindane)	0.063	<.01	<.01	No	Not detected
106	delta-BHC	No criteria	<.01	<.01	No	Not detected
107	Chlordane	0.00059	<.05	<0.05	No	Not detected
108	4,4'-DDT	0.00059	<.01	<.01	No	Not detected
109	4,4'-DDE	0.00059	<.01	<.01	No	Not detected
110	4,4'-DDD	0.00084	<.01	<.01	No	Not detected
111	Dieldrin	0.00014	<.01	<.01	No	Not detected
112	Alpha-Endosulfan	0.056	<.01	<.01	No	Not detected
113	Beta-Endosulfan	0.056	<.01	<.01	No	Not detected
114	Endosulfan Sulfate	240	<0.01	<.01	No	Not detected
115	Endrin	0.036	<0.01	<.01	No	Not detected
116	Endrin Aldehyde	0.81	<0.01	<.01	No	Not detected
117	Heptachlor	0.00021	<.01	<.01	No	Not detected
118	Heptachlor Epoxide	0.00011	<0.01	<.01	No	Not detected
119	PCB 1016	0.00017	<.1	<.01	No	Not detected

REVISED TENTATIVE

CTR No.	Constituent	Applicable Water Quality Criteria (C) µg/L	Max Effluent Conc. (MEC) µg/L	Maximum Detected Receiving Water Conc.(B) µg/L[8]	RPA Result - Need Limitation?	Reason
120	PCB 1221	0.00017	<.5	<.05	No	Not detected
121	PCB 1232	0.00017	<.3	<.03	No	Not detected
122	PCB 1242	0.00017	<.1	<0.01	No	Not detected
123	PCB 1248	0.00017	<.1	<0.01	No	Not detected
124	PCB 1254	0.00017	<.05	<.05	No	Not detected
125	PCB 1260	0.00017	<.1	<0.01	No	Not detected
126	Toxaphene	0.00075	<.5	<.05	No	Not detected

REVISED TENTATIVE

The following Table summarizes results from RPA for San Jose West discharge at EFF-003.

Table F-16. Summary of Reasonable Potential Analysis for CTR Based Priority Pollutants at EFF-003

CTR No.	**Constituent**	**Applicable Water Quality Criteria(C)** µg/L	**Max Effluent Conc. (MEC)** µg/L	**Maximum Detected Receiving Water Conc.(B)** µg/L[9]	**RPA Result - Need Limitation?**	**Reason**
1	Antimony	6	0.78	0.81*	No	MEC<C
2	Arsenic	10	1.4	2.18*	No	MEC<C
3	Beryllium	4	<.25	<.25	No	Not detected
4	Cadmium	13.62	0.43	0.25*	No	MEC<C
5a	Chromium III	3869.5	1.56	4.13*	No	MEC<C
5b	Chromium VI	11.69	.24	2.03*	No	MEC<C
6	Copper	35.19	9.08	7.72*	No	MEC<C
7	**Lead**	166	0.36	2.01*	**Yes**	**TMDL WLA**
8	Mercury	0.051	0.0036	.02*	No	MEC<C
9	Nickel	1073.46	4.19	6.55*	No	MEC<C
10	Selenium	5	0.67	4.75*	No	MEC<C
11	Silver	21.84	0.1	.03*	No	MEC<C
12	Thallium	2	<.25	<.25	No	Not detected
13	Zinc	274.48	64.3	66.1*	No	MEC<C
14	Cyanide	5.2	2.5	2.91*	No	MEC<C
15	Asbestos	$7x10^6$ fibers/L			No	N/A

[9] Highest value measured at receiving monitoring point upstream at RSW-003 (R-10) or * RSW-002 (C-2).

CTR No.	Constituent	Applicable Water Quality Criteria(C) µg/L	Max Effluent Conc. (MEC) µg/L	Maximum Detected Receiving Water Conc.(B) µg/L[9]	RPA Result - Need Limitation?	Reason
16	2,3,7,8-TCDD (Dioxin)	1.4E-8	<1.2E-8	<1.2E-8	No	Not detected
17	Acrolein	780	1	<2	No	MEC<C
18	Acrylonitrile	0.66	<2	<2	No	Not detected
19	Benzene	1	<0.5	<0.5	No	Not detected
20	Bromoform	360	0.66	.69*	No	MEC<C
21	Carbon Tetrachloride	0.5	<0.5	<0.5	No	Not detected
22	Chlorobenzene	21,000	<0.5	<0.5	No	Not detected
23	Dibromochloromethane	34	7.7	5.7*	No	MEC<C
24	Chloroethane	No criteria	<.5	<.5	No	No criteria
25	2-chloroethyl vinyl ether	No criteria	<.5	<.5	No	No criteria
26	Chloroform	No criteria	63.2	18.6*	No	No criteria
27	Dichlorobromomethane	46	24.4	14.1*	No	MEC<C
28	1,1-dichloroethane	5	<0.5	<0.5	No	Not detected
29	1,2-dichloroethane	0.5	<0.5	<0.5	No	Not detected
30	1,1-dichloroethylene	3.2	<0.5	<0.5	No	Not detected
31	1,2-dichloropropane	5	<0.5	<0.5	No	Not detected
32	1,3-dichloropropylene	0.5	<0.5	<0.5	No	Not detected
33	Ethylbenzene	0.3	<0.5	<0.5	No	Not detected
34	Methyl bromide	4,000	<0.5	<0.5	No	Not detected
35	Methyl chloride	No criteria	0.22	<0.5	No	No criteria
36	Methylene chloride	1,600	0.93	0.62*	No	MEC<C
37	1,1,2,2-tetrachloroethane	1	<.5	<.5	No	Not detected
38	Tetrachloroethylene	5	.43	<.5	No	MEC<C
39	Toluene	150	0.25	1.8*	No	MEC<C
40	Trans 1,2-Dichloroethylene	10	<0.5	<0.5	No	Not detected
41	1,1,1-Trichloroethane	200	<0.5	<0.5	No	Not detected

REVISED TENTATIVE

CTR No.	Constituent	Applicable Water Quality Criteria(C) µg/L	Max Effluent Conc. (MEC) µg/L	Maximum Detected Receiving Water Conc.(B) µg/L[9]	RPA Result - Need Limitation?	Reason
42	1,1,2-Trichloroethane	5	<0.5	<0.5	No	Not detected
43	Trichloroethylene	5	<0.5	<0.5	No	Not detected
44	Vinyl Chloride	0.5	<0.5	<0.5	No	Not detected
45	2-chlorophenol	400	<5	<0.5	No	Not detected
46	2,4-dichlorophenol	790	<5	<0.5	No	Not detected
47	2,4-dimethylphenol	2,300	<2	<2	No	Not detected
48	4,6-dinitro-o-resol(aka 2-methyl-4,6-Dinitrophenol)	765	<5	<0.5	No	Not detected
49	2,4-dinitrophenol	14,000	<5	<0.5	No	Not detected
50	2-nitrophenol	No criteria	<10	<10	No	No criteria
51	4-nitrophenol	No criteria	<10	<10	No	No criteria
52	3-Methyl-4-Chlorophenol (aka P-chloro-m-resol)	No criteria	<1	<1	No	No criteria
53	Pentachlorophenol	1	<1	<1	No	Not detected
54	Phenol	4,600,000	2	4.2*	No	MEC<C
55	2,4,6-trichlorophenol	6.5	0.41	0.56*	No	MEC<C
56	Acenaphthene	2,700	<1	<1	No	Not detected
57	Acenaphthylene	No criteria	<10	<10	No	No criteria
58	Anthracene	110,000	<10	<10	No	Not detected
59	Benzidine	0.00054	<5	<5	No	Not detected
60	Benzo(a)Anthracene	0.049	<5	<5	No	Not detected
61	Benzo(a)Pyrene	0.049	<.02	<.02	No	Not detected
62	Benzo(b)Fluoranthene	0.049	0.01	.02*	No	MEC<C
63	Benzo(ghi)Perylene	No criteria	<5	<5	No	No criteria
64	Benzo(k) Fluoranthene	0.049	.01	.029*	No	MEC<C
65	Bis(2-Chloroethoxy) methane	No criteria	<5	<5	No	No criteria
66	Bis(2-Chloroethyl)Ether	1.4	<1	<1	No	Not detected

REVISED TENTATIVE

CTR No.	Constituent	Applicable Water Quality Criteria(C) µg/L	Max Effluent Conc. (MEC) µg/L	Maximum Detected Receiving Water Conc.(B) µg/L[9]	RPA Result - Need Limitation?	Reason
67	Bis(2-Chloroisopropyl) Ether	170,000	<2	<2	No	Not detected
68	Bis(2-Ethylhexyl) Phthalate	.0049	<2	<2	No	Not detected
69	4-Bromophenyl phenyl ether	No criteria	<5	<5	No	No criteria
70	Butylbenzyl Phthalate	5,200	<10	<10	No	Not detected
71	2-Chloronaphthalene	4,300	<10	<10	No	Not detected
72	4-Chlorophenyl Phenyl Ether	No criteria	<5	<5	No	No criteria
73	Chrysene	0.049	<0.02	0.0045	No	MEC<C
74	**Dibenzo(a,h) Anthracene**	0.049	.017	0.1*	**Yes**	**B>C and detected in effluent**
75	1,2-Dichlorobenzene	600	<0.5	<0.5	No	Not detected
76	1,3-Dichlorobenzene	2,600	<0.5	<5	No	Not detected
77	1,4-Dichlorobenzene	5	0.25	<.5	No	MEC<C
78	3-3'-Dichlorobenzidine	0.077	<5	<5	No	Not detected
79	Diethyl Phthalate	120,000	1	<2	No	MEC<C
80	Dimethyl Phthalate	2,900,000	<2	<2	No	Not detected
81	Di-n-Butyl Phthalate	12,000	<10	<10	No	Not detected
82	2-4-Dinitrotoluene	9.1	<5	<5	No	Not detected
83	2-6-Dinitrotoluene	No criteria	<5	<5	No	No criteria
84	Di-n-Octyl Phthalate	No criteria	<10	<10	No	No criteria
85	1,2-Diphenylhydrazine	0.54	<1	<1	No	Not detected
86	Fluoranthene	370	<1	<1	No	Not detected
87	Fluorene	14,000	<10	<10	No	Not detected
88	Hexachlorobenzene	0.00077	<1	<1	No	Not detected
89	Hexachlorobutadiene	50	<1	<1	No	Not detected
90	Hexachlorocyclopenta-diene	17,000	<5	<1	No	Not detected

REVISED TENTATIVE

CTR No.	Constituent	Applicable Water Quality Criteria(C) µg/L	Max Effluent Conc. (MEC) µg/L	Maximum Detected Receiving Water Conc.(B) µg/L[9]	RPA Result - Need Limitation?	Reason
91	Hexachloroethane	8.9	<1	<1	No	Not detected
92	Indeno(1,2,3-cd)Pyrene	0.049	0.021	0.045*	No	MEC<C
93	Isophorone	600	<1	<1	No	Not detected
94	Naphthalene	No criteria	<1	<1	No	Not detected
95	Nitrobenzene	1,900	<1	<5	No	Not detected
96	N-Nitro-sodimethylamine	8.1	0.48	<5	No	MEC<C
97	N-Nitrosodi-n-Propylamine	1.4	<5	<5	No	Not detected
98	N-Nitro-sodiphenylamine	16	<1	<1	No	Not detected
99	Phenanthrene	No criteria	<5	<5	No	Not detected
100	Pyrene	11,000	<10	<10	No	Not detected
101	1,2,4-Trichlorobenzene	No criteria	<5	<5	No	Not detected
102	Aldrin	0.00014	<0.01	<0.01	No	Not detected
103	Alpha-BHC	0.013	<0.01	<0.01	No	Not detected
104	Beta-BHC	0.046	<0.01	<0.01	No	Not detected
105	Gamma-BHC (aka Lindane)	0.063	0.01	<0.01	No	MEC<C
106	delta-BHC	No criteria	<0.01	<0.01	No	No criteria
107	Chlordane	0.00059	<0.05	<0.05	No	Not detected
108	4,4'-DDT	0.00059	<0.01	<0.01	No	Not detected
109	4,4'-DDE	0.00059	<0.01	<0.01	No	Not detected
110	4,4'-DDD	0.00084	<0.01	<0.01	No	Not detected
111	Dieldrin	0.00014	<0.01	<0.01	No	Not detected
112	Alpha-Endosulfan	0.056	<0.01	<0.01	No	Not detected
113	Beta-Endosulfan	0.056	<0.01	<0.01	No	Not detected

REVISED TENTATIVE

CTR No.	Constituent	Applicable Water Quality Criteria(C) µg/L	Max Effluent Conc. (MEC) µg/L	Maximum Detected Receiving Water Conc.(B) µg/L[9]	RPA Result - Need Limitation?	Reason
114	Endosulfan Sulfate	240	<0.01	<0.01	No	Not detected
115	Endrin	0.036	<0.01	<0.01	No	Not detected
116	Endrin Aldehyde	0.81	<0.01	<0.01	No	Not detected
117	Heptachlor	0.00021	<0.01	<0.01	No	Not detected
118	Heptachlor Epoxide	0.00011	<0.01	<0.01	No	Not detected
119	PCB 1016	0.00017	<1	<0.01	No	Not detected
120	PCB 1221	0.00017	<0.05	<0.05	No	Not detected
121	PCB 1232	0.00017	<0.3	<0.03	No	Not detected
122	PCB 1242	0.00017	<0.1	<0.01	No	Not detected
123	PCB 1248	0.00017	<0.1	<0.01	No	Not detected
124	PCB 1254	0.00017	<0.05	<0.05	No	Not detected
125	PCB 1260	0.00017	<0.1	<0.01	No	Not detected
126	Toxaphene	0.00075	<0.5	<0.5	No	Not detected

REVISED TENTATIVE

The RPA for EFF-002 (Table F-1) and EFF-003 (Table F-2) apply to EFF-001. In addition, the following Table summarizes additional requirements from RPA for San Jose West and East discharge at EFF-001. Note that among all the outfalls, EFF-001 is the only discharge point which does not have a reasonable potential to exceed the lead criteria, because the San Gabriel Metals TMDL does not apply a lead WLA to Reach 1 of the San Gabriel River.

Table F-17. Summary of Further Reasonable Potential Analysis for CTR Based Priority Pollutants at EFF-001

CTR No.	Constituent	Applicable Water Quality Criteria(C) µg/L	Max Effluent Conc. (MEC) µg/L	Maximum Detected Receiving Water Conc.(B) µg/L[10]	RPA Result - Need Limitation?	Reason
6	**Copper (dry weather)**	12.44	9.08	23.4	**YES**	**TMDL**

[10] Highest value measured at receiving monitoring point upstream of RSW-004 (R-11).

CTR No.	Constituent	Applicable Water Quality Criteria(C) µg/L	Max Effluent Conc. (MEC) µg/L	Maximum Detected Receiving Water Conc.(B) µg/L[10]	RPA Result - Need Limitation?	Reason
64	**Benzo(k) Fluoranthene**	0.049	0.01	0.063	**YES**	**B>C and detected in effluent**
74	**Dibenzo(a,h)anthracene**	0.049	0.03	0.12	**Yes**	**B>C and detected in effluent**
92	**Indeno(1,2,3-cd)Pyrene**	0.049	0.026	0.08	**YES**	**B>C and detected in effluent**

The RPA for EFF-002 (Table F-1) and EFF-003 (Table F-2) apply to EFF-001A and EFF-001B. In addition, the following Table summarizes additional requirements from RPA for San Jose West and East discharge at EFF-001A and EFF-001B.

Table F-18. Summary of Further Reasonable Potential Analysis for CTR Based Priority Pollutants at EFF-001A and EFF-001B

CTR No.	Constituent	Applicable Water Quality Criteria(C) µg/L	Max Effluent Conc. (MEC) µg/L	Maximum Detected Receiving Water Conc.(B) µg/L[11]	RPA Result - Need Limitation?	Reason
6	**Copper**	9.08	12.44	23.4	**YES**	**B>C and detected in effluent**
7	**Lead (wet weather)**	4.88	.36	1.91	**YES**	**TMDL**
64	**Benzo(k) Fluoranthene**	0.049	0.01	0.063	**YES**	**B>C and detected in effluent**
74	**Dibenzo(a,h)anthracene**	0.049	0.03	0.12	**Yes**	**B>C and detected in effluent**
92	**Indeno(1,2,3-cd)Pyrene**	0.049	0.026	0.08	**YES**	**B>C and detected in effluent**

The RPA for EFF-003 (Table F-2) applies to EFF-004 and EFF-005. In addition, the following table summarizes additional requirements from RPA for San Jose West discharge at EFF-004 and EFF-005 as described below and in the following table.

[11] Highest value measured at receiving monitoring point upstream of RSW-004 (R-11).

REVISED TENTATIVE

Table F-19. Summary of Further Reasonable Potential Analysis for CTR Based Priority Pollutants at Proposed Discharge Points Nos. EFF-004 and EFF-005

CTR No.	Constituent	Applicable Water Quality Criteria(C) µg/L	Max Effluent Conc. (MEC) µg/L	Maximum Detected Receiving Water Conc.(B) µg/L[12]	RPA Result - Need Limitation?	Reason
2	**Arsenic**	10	1.4	13.4	**YES**	**B>C and detected in effluent**
6	**Copper**	12.44	9.08	23.4	**YES**	**B>C and detected in effluent**
7	**Lead (wet weather)**	4.88	0.36	1.91	**YES**	**TMDL**
10	**Selenium**	5	0.0675	6.1	**YES**	**B>C and detected in effluent**

REVISED TENTATIVE

4. WQBEL Calculations

a. **Calculation Options**. Once RPA has been conducted using either the TSD or the SIP methodologies, WQBELs are calculated. Alternative procedures for calculating WQBELs include:

i. Use WLA from applicable TMDL

ii. Use a steady-state model to derive MDELs and AMELs.

iii. Where sufficient data exist, use a dynamic model which has been approved by the State Water Board.

b. **Multiple Discharge Points**

RPA was performed and separate effluent limits were established for Discharge Point Nos. 001, 001A and 001B, Discharge Point No. 002, Discharge Point 003, Discharge Point 004 and Discharge Point 005. Each of these discharge points go to different waterbodies (San Gabriel River Reach 2, San Jose Creek Reach 1, San Gabriel Reach 3, San Gabriel River Reach 4, and San Gabriel River Reach 5, respectively) where different TMDL-based waste load allocations apply.

c. **San Gabriel River Metals.**

Implementation Recommendations of the EPA-established metals TMDLs for San Gabriel River and Impaired Tributaries describes the implementation procedures and regulatory mechanisms that could be used to provide reasonable assurances that water quality standards will be met. For POTWs NPDES permits, USEPA suggest that permit writers could translate waste load allocations (WLAs) into effluent limits by applying the SIP procedures or other applicable engineering practices authorized under federal regulations.

[12] Highest value measured at receiving monitoring point at the upstream SGRRMP station SGUT505.

According to Table 2-9, Summary of dry-weather and wet-weather impairments, San Gabriel River Reach 2 has only wet-weather impairment for lead. There is reasonable potential for lead because a TMDL WLA has been developed (Tier 3) for Reach 2. This WLA applies in San Gabriel River Reach 2 and all upstream reaches and tributaries. Therefore, an effluent limitation has been prescribed for lead at all of the discharge points except for Discharge Point No. 001. The effluent limit calculations are consistent with the San Gabriel River Metals TMDL implementation procedure. The final effluent limitations for lead shall apply to wet-weather conditions only. Wet-weather is defined as the condition in the San Gabriel River when maximum daily flow at the United States Geological Survey gauging station 11087020 is equal to or greater than 260 cubic feet per second. The San Gabriel River Metals TMDL on page 17 indicated that the USGS gauge station located just above Whittier Narrow Dam (station 11085000) is the best indicator of wet-weather flow conditions. However, USGS station 11085000 is actually located below Santa Fe Dam in Baldwin Park. The USGS flow gauging station above Whittier Narrows Dam in Reach 3 is 11087020. Therefore, for flow monitoring purpose, and for determination of wet-weather flow conditions, USGS station 11087020 will be used.

San Jose Creek Reach 1 has TMDL wasteload allocations for selenium in dry weather impairment. Therefore, limits were set for selenium in Discharge Serial No. 002, which discharges to San Jose Creek Reach 1.

The San Gabriel River Metals TMDL developed WLAs for copper, lead, and selenium in select upstream reaches and tributaries to meet TMDLs in downstream reaches. Receiving water concentrations above Discharge Points Nos. 004 and 005 exceeded copper and selenium water quality objectives and the constituents are present in the effluent at EFF-003. While copper and selenium are limited in applicable TMDLs, limits were applied at EFF-004 and EFF-005 because they show reasonable potential to exceed the water quality criteria (Tier 2) and not to meet TMDL waste loads..

d. **SIP Calculation Procedure.**

Section 1.4 of the SIP requires the step-by-step procedure to “adjust” or convert CTR numeric criteria into AMELs and MDELs, for toxics.

Step 3 of section 1.4 of the SIP (starting on page 6) lists the statistical equations that adjust CTR criteria for effluent variability.

Step 5 of section 1.4 of the SIP (starting on page 8) lists the statistical equations that adjust CTR criteria for averaging periods and exceedance frequencies of the criteria/objectives. This section also reads, “For this method only, maximum daily effluent limitations shall be used for publicly-owned treatment works (POTWs) in place of average weekly limitations.”

Sample calculation for Lead for Discharge Point No. 002:

Step 1: Identify applicable water quality criteria

The California Toxics Rule (CTR) gives the Criterion Maximum Concentration (CMC) and the Criterion Continuous Concentration (CCC).

REVISED TENTATIVE

Freshwater Aquatic Life Criteria for lead.
CMC = 300.05 (CTR page 31712, column B1) and
CCC = 11.69 (CTR page 31712, column B1)
The above values are based upon hardness average value of 278 mg/L of the receiving water.

Step 2: Calculate effluent concentration allowance (ECA)
ECA = Criteria in TMDL, since no dilution is allowed.

Step 3: Determine long-term average (LTA) discharge condition
Calculate CV:

CV = Standard Deviation/Mean = .439
ECA Multiplier acute = 0.4113554 and
ECA Multiplier chronic = 0.6181632
LTA acute = ECA acute x ECA Multiplier acute
= 300.05 µg/L x 0.4113554 = 123.427 µg/L
LTA chronic = ECA chronic x ECA Multiplier chronic
= 11.69 µg/L x 0.6181632= 7.226 µg/L
Step 4: Select the lowest LTA, which is 7.226 µg/L.
Step 5: Calculate the Average Monthly Effluent Limitation (AMEL) & Maximum Daily Effluent Limitation (MDEL) for AQUATIC LIFE
Find the multipliers.
AMEL Multiplier = 1.3955501
MDEL Multiplier = 2.4309879
AMEL aquatic life = lowest LTA (from Step 4) x AMEL Multiplier
= 7.226 µg/L x 1.3955501= 10.085 µg/L
MDEL aquatic life = lowest LTA (from Step 4) x MDEL Multiplier
= 7.226 µg/L x 2.4309879= 17.567 µg/L
Step 6: Find the Average Monthly Effluent Limitation (AMEL) & Maximum Daily Effluent Limitation (MDEL) for HUMAN HEALTH
It is not available, due to no human health CTR.
Step 7: Compare the AMELs for Aquatic life and Human health and select the lowest. Compare the MDELs for Aquatic life and Human health and select the lowest
Lowest AMEL = 10.1 µg/L (Based on Aquatic Life protection)
Lowest MDEL = 17.6 µg/L (Based on Aquatic Life protection)

The San Gabriel Metals and Selenium TMDL includes a concentration limit for lead which applies to the downstream Reach 2 of the San Gabriel River and all upstream reaches and tributaries. The TMDL also states that "Wet-weather allocations will be developed for all upstream reaches and tributaries in the watershed that drain to impaired reaches during wet weather (pg. 16)." A wet-weather lead limit is also applied at the Pomona Water Reclamation Plant upstream on San Jose Creek. The TMDL concentration limit for lead is applied at this outfall during wet weather conditions.

REVISED TENTATIVE

e. **Impracticability Analysis**

Federal NPDES regulations contained in 40 CFR § 122.45 for continuous discharges, states that all permit limitations, standards, and prohibitions for POTWs, including those to achieve water quality standards, shall unless impracticable be stated as average weekly and average monthly discharge limitations for all dischargers other than POTWs.

As stated by USEPA in its long standing guidance for developing WQBELs average alone limitations are not practical for limiting acute, chronic, and human health toxic effects.

For example, a POTW sampling for a toxicant to evaluate compliance with a 7-day average limitation could fully comply with this average limit, but still be discharging toxic effluent on one, two, three, or up to four of these seven days and not be meeting 1-hour average acute criteria or 4-day average chronic criteria. For these reason, USEPA recommends daily maximum and 30-day average limits for regulating toxics in all NPDES discharges. For the purposes of protecting the acute effects of discharges containing toxicants (CTR human health for the ingestion of fish), daily maximum limitations have been established in this NPDES permit for mercury because it is considered to be a carcinogen, endocrine disruptor, and is bioaccumulative.

A 7-day average alone would not protect one, two, three, or four days of discharging pollutants in excess of the acute and chronic criteria. Fish exposed to these endocrine disrupting chemicals will be passed on to the human consumer. Endocrine disrupters alter hormonal functions by several means. These substances can:

i. mimic or partly mimic the sex steroid hormones estrogens and androgens (the male sex hormone) by binding to hormone receptors or influencing cell signaling pathways.

ii. block, prevent and alter hormonal binding to hormone receptors or influencing cell signaling pathways.

iii. alter production and breakdown of natural hormones.

iv. modify the making and function of hormone receptors.

f. **Mass-based limits**.

40 CFR § 122.45(f)(1) requires that except under certain conditions, all permit limits, standards, or prohibitions be expressed in terms of mass units. 40 CFR § 122.45(f)(2) allows the permit writer, at its discretion, to express limits in additional units (e.g., concentration units). The regulations mandate that, where limits are expressed in more than one unit, the Permittee must comply with both.

Generally, mass-based limits ensure that proper treatment, and not dilution, is employed to comply with the final effluent concentration limits. Concentration-based effluent limits, on the other hand, discourage the reduction in treatment efficiency during low-flow periods and require proper operation of the treatment units at all times. In the absence of concentration-based effluent limits, a Permittee would be

REVISED TENTATIVE

able to increase its effluent concentration (i.e., reduce its level of treatment) during low-flow periods and still meet its mass-based limits. To account for this, this permit includes mass and concentration limits for some constituents.

Table F-20. Summary of Water Quality Based Effluent Limits at EFF-001, EFF-001A and EFF-001B

Parameter	Units	Effluent Limitations				
		Average Monthly	Average Weekly	Maximum Daily	Instant-aneous Min.	Instant-aneous Max.
Water Quality-Based Effluent Limitations Applicable to Discharge Points 001, 001A and 001B						
Benzo(k)fluoranthene	µg/L	0.049	--	0.098	--	--
	lbs/day	0.04	--	0.08	--	--
Dibenzo(a,h)anthracene	µg/L	0.049	--	0.098	--	--
	lbs/day	0.04	--	0.08	--	--
Indeno(1,2,3cd) pyrene	µg/L	0.049	--	0.098	--	--
	lbs/day	0.04	--	0.08	--	--
Chronic Toxicity[13]	Pass or Fail, % Effect (TST)	Pass[14]	--	Pass or % Effect <50	--	--
Water Quality-Based Effluent Limitations Applicable to Discharge Points 001 ONLY						
Ammonia Nitrogen (ELS absent)	mg/L	5.5	--	8	--	--
	lbs/day	4,587[15]	--	6,670	--	
Copper (dry weather)[15]	µg/L	17	--	22	--	--
Water Quality Based Effluent Limitations Applicable to Discharge Points 001A and 001B ONLY						
MBAS	mg/L	.5	--	--	--	--
	lbs/day	417	--	--	--	--

REVISED TENTATIVE

[13] The median monthly effluent limitation (MMEL) shall be reported as “Pass” or “Fail”. The maximum daily effluent limitation (MDEL) shall be reported as “Pass” or “Fail” and “% Effect”. The MMEL for chronic toxicity shall only apply when there is a discharge more than one day in a calendar month period. During such calendar months, up to three independent toxicity tests may be conducted when one toxicity test results in “Fail”.

[14] This is a Median Monthly Effluent Limitation.

[15] This final effluent limitation for copper is derived from the final waste load allocation, as set forth in the SGR Metals TMDL. The copper limit only applies during dry weather when the flow is less than 260 cfs.

Parameter	Units	Effluent Limitations				
		Average Monthly	Average Weekly	Maximum Daily	Instant-aneous Min.	Instant-aneous Max.
Ammonia Nitrogen (ELS present)	mg/L	4.0[16]	--	6.0	--	--
	lbs/day[17]	3,336	--	5,004	--	--
Ammonia Nitrogen (ELS absent)	mg/L	4.9[18]	--	6.8	--	--
	lbs/day[18]	4,057	--	5,671	--	--
Nitrate + Nitrite as Nitrogen	mg/L	8	--	--	--	--
	lbs/day[17]	6,670	--	--	--	--
Nitrite (as N)	mg/L	1	--	--	--	--
	lbs/day[17]	830	--	--	--	--
Lead (wet weather)	µg/L	--	--	166[19]	--	--
Copper	µg/L	18	--	24	--	--
	lbs/day[17]	15	--	20	--	--
Total Trihalomethanes	µg/L	80[20]	--	--	--	--
	lbs/day[17]	66,720	--	--	--	--

REVISED TENTATIVE

[16] This seasonal final effluent limitation is derived from the site specific objective for ammonia nitrogen, when early life stage fish are **present (ELS present)**, contained in Regional Board Resolution No. 2007-005 and translated according to the procedures contained in the Implementation Section of Resolution No. 2002-011. This limitation applies from April 1 through September 30.

[17] The mass emission rates are based on the combined plant design flow rate of 100 mgd, and are calculated as follows: Flow (MGD) x Concentration (mg/L) x 8.34 (conversion factor) = lbs/day. During wet-weather storm events in which the flow exceeds the design capacity, the mass discharge rate limitations shall not apply, and concentration limitations will provide the only applicable effluent limitations.

[18] This seasonal final effluent limitation is derived from the site specific objective for ammonia nitrogen, when early life stage fish are **absent (ELS absent)**, contained in Regional Board Resolution No. 2007-005 and translated according to the procedures contained in the Implementation Section of Resolution No. 2002-011. This limitation applies from October 1 through March 31.

[19] This final effluent limitation for lead is derived from the wet weather final waste load allocation, as set forth in the *SGR Metals TMDL)*. Consistent with the Implementation Recommendations of the *SGR Metals TMDL*, the wet weather waste load allocation was translated into effluent limitations by applying the SIP procedures. This effluent limitation applies only during wet weather, when the flow in the San Gabriel River is greater than or equal to 260 cubic feet per second (cfs), measured at USGS flow gauging station 11087020, located above the Whittier Narrows dam. The effluent load is given as a concentration, so calculation of a mass load is not consistent with the TMDL.

[20] Total Trihalomethanes is the sum of concentrations of the trihalomethane compounds: bromodichloromethane, bromoform, chloroform, and dibromochloromethane.

Table F-21. Summary of Water Quality Based Effluent Limits at EFF-002

Parameter	Units	Effluent Limitations				
		Average Monthly	Average Weekly	Maximum Daily	Instant-aneous Min.	Instant-aneous Max.
Ammonia Nitrogen (ELS present)	mg/L	4.2[21]	--	6.1	--	--
	lbs/day[22]	2,190	--	3,180	--	--
Ammonia Nitrogen (ELS absent)	mg/L	5.4[23]	--	7.8	--	--
	lbs/day[22]	2,810	--	4,070	--	--
Nitrate plus nitrite as nitrogen	mg/L	8	--	--	--	--
	lbs/day[22]	4170	--	--	--	--
Nitrite (as N)	mg/L	1	--	--	--	--
	lbs/day[22]	520	--	--	--	--
MBAS	mg/L	0.5	--	--	--	--
	lbs/day[22]	261	--	--	--	--
Lead [Wet weather]	µg/L	--	--	166[24]	--	--
Selenium [Dry weather]	µg/L	4.6	--	6.5	--	--
	lbs/day[22]	2.4	--	3.4	--	--
Chrysene	µg/L	0.049	--	0.098	--	--
	lbs/day[22]	0.026	--	0.051	--	--
Dibenzo(a,h)anthracene	µg/L	0.049	--	0.098	--	--
	lbs/day[22]	0.026	--	0.051	--	--
Indeno(1,2,3cd) pyrene	µg/L	0.049	--	0.098	--	--
	lbs/day[22]	0.026	--	0.051	--	--
Benzo(k) fluoranthene	µg/L	0.049	--	0.098	--	--
	lbs/day[22]	0.026	--	0.051	--	--

REVISED TENTATIVE

[21] This seasonal final effluent limitation is derived from the site specific objective for ammonia nitrogen, when early life stage fish are **present (ELS present)**, contained in Regional Board Resolution No. 2007-005 and translated according to the procedures contained in the Implementation Section of Resolution No. 2002-011. This limitation applies from April 1 through September 30.

[22] The mass emission rates are based on the San Jose Creek East plant design flow rate of 62.5 mgd, and are calculated as follows: Flow (MGD) x Concentration (mg/L) x 8.34 (conversion factor) = lbs/day. During wet-weather storm events in which the flow exceeds the design capacity, the mass discharge rate limitations shall not apply, and concentration limitations will provide the only applicable effluent limitations.

[23] This seasonal final effluent limitation is derived from the site specific objective for ammonia nitrogen, when early life stage fish are **absent (ELS absent)**, contained in Regional Board Resolution No. 2007-005 and translated according to the procedures contained in the Implementation Section of Resolution No. 2002-011. This limitation applies from October 1 through March 31.

[24] This final effluent limitation for lead is derived from the wet weather final waste load allocation, as set forth in the *SGR Metals TMDL)*. Consistent with the Implementation Recommendations of the *SGR Metals TMDL*, the wet weather waste load allocation was translated into effluent limitations by applying the SIP procedures. This effluent limitation applies only during wet weather, when the flow in the San Gabriel River is greater than or equal to 260 cubic feet per second (cfs), measured at USGS flow gauging station 11087020, located above the Whittier Narrows dam.

Parameter	Units	Effluent Limitations				
		Average Monthly	Average Weekly	Maximum Daily	Instant-aneous Min.	Instant-aneous Max.
Total Trihalomethanes	µg/L	80[25]	--	--	--	--
	lbs/day[22]	41.7	--	--	--	--
Chronic Toxicity[26]	Pass or Fail, % Effect (TST)	Pass[27]	--	Pass or % Effect <50	--	--

Table F-22. Summary of Water Quality Based Effluent Limits at EFF-003, EFF-004, and EFF-005

Parameter	Units	Effluent Limitations				
		Average Monthly	Average Weekly	Maximum Daily	Instant-aneous Min.	Instant-aneous Max.
Nitrate plus Nitrite as Nitrogen	mg/L	8	--	--	--	--
	lbs/day[32]	2,500	--	--	--	--
Nitrite (as N)	mg/L	1	--	--	--	--
	lbs/day[32]	312	--	--	--	--
MBAS	mg/L	0.5	--	--	--	--
	lbs/day[32]	156	--	--	--	--
Lead [Wet weather]	µg/L	--	--	166[28]	--	--
Dibenzo(a,h)anthracene	µg/L	0.049	--	0.098	--	--
	lbs/day[32]	0.02	--	0.03	--	--
Total Trihalomethanes	µg/L	80	--	--	--	--
	lbs/day[32]	25.0	--	--	--	--

REVISED TENTATIVE

[25] Total Trihalomethanes is the sum of concentrations of the trihalomethane compounds: bromodichloromethane, bromoform, chloroform, and dibromochloromethane.

[26] The median monthly effluent limitation (MMEL) shall be reported as “Pass” or “Fail”. The maximum daily effluent limitation (MDEL) shall be reported as “Pass” or “Fail” and “% Effect”. The MMEL for chronic toxicity shall only apply when there is a discharge more than one day in a calendar month period. During such calendar months, up to three independent toxicity tests may be conducted when one toxicity test results in “Fail”.

[27] This is a Median Monthly Effluent Limitation.

[28] This final effluent limitation for lead is derived from the wet weather final waste load allocation, as set forth in the *SGR Metals TMDL)*. Consistent with the Implementation Recommendations of the *SGR Metals TMDL*, the wet weather waste load allocation was translated into effluent limitations by applying the SIP procedures. This effluent limitation applies only during wet weather, when the flow in the San Gabriel River is greater than or equal to 260 cubic feet per second (cfs), measured at USGS flow gauging station 11087020, located above the Whittier Narrows dam.

Parameter	Units	Effluent Limitations				
		Average Monthly	Average Weekly	Maximum Daily	Instant-aneous Min.	Instant-aneous Max.
Chronic Toxicity[29]	Pass or Fail, % Effect (TST)	Pass[30]	--	Pass or % Effect<50	--	--
Water Quality Based Effluent Limitations Applicable to Discharge Points 003 ONLY						
Ammonia Nitrogen (ELS present)	mg/L	4.0[31]	--	6.3	--	--
	lbs/day[32]	1,250	--	1,970	--	--
Ammonia Nitrogen (ELS absent)	mg/L	5.0[33]	--	7.8	--	--
	lbs/day[32]	1,560		2,440	--	--
Total dissolved solid	mg/L	750	--	--	--	--
	lbs/day[32]	235,000	--	--	--	--
Sulfate	mg/L	300	--	--	--	--
	lbs/day[32]	93,800	--	--	--	--
Chloride	mg/L	180	--	--	--	--
	lbs/day[32]	56,300	--	--	--	--
Boron	mg/L	1	--	--	--	--
	lbs/day[32]	313	--	--	--	--
Water Quality Based Effluent Limitations Applicable to Discharge Points 004 and 005 ONLY						
Ammonia Nitrogen (ELS absent)	mg/L	4.4	--	2.8	--	--
	lbs/day[32]	1380	--	880	--	--

REVISED TENTATIVE

[29] The median monthly effluent limitation (MMEL) shall be reported as "Pass" or "Fail". The maximum daily effluent limitation (MDEL) shall be reported as "Pass" or "Fail" and "% Effect". The MMEL for chronic toxicity shall only apply when there is a discharge more than one day in a calendar month period. During such calendar months, up to three independent toxicity tests may be conducted when one toxicity test results in "Fail".

[30] This is a Median Monthly Effluent Limitation.

[31] This seasonal final effluent limitation is derived from the site specific objective for ammonia nitrogen, when early life stage fish are **present (ELS present)**, contained in Regional Board Resolution No. 2007-005 and translated according to the procedures contained in the Implementation Section of Resolution No. 2002-011. This limitation applies from April 1 through September 30.

[32] The mass emission rates are based on the San Jose Creek West plant design flow rate of 37.5 mgd, and are calculated as follows: Flow (MGD) x Concentration (mg/L) x 8.34 (conversion factor) = lbs/day. During wet-weather storm events in which the flow exceeds the design capacity, the mass discharge rate limitations shall not apply, and concentration limitations will provide the only applicable effluent limitations.

[33] This seasonal final effluent limitation is derived from the site specific objective for ammonia nitrogen, when early life stage fish are **absent (ELS absent)**, contained in Regional Board Resolution No. 2007-005 and translated according to the procedures contained in the Implementation Section of Resolution No. 2002-011. This limitation applies from October 1 through March 31.

Parameter	Units	Effluent Limitations				
		Average Monthly	Average Weekly	Maximum Daily	Instant-aneous Min.	Instant-aneous Max.
Arsenic	µg/L	10	--	--	--	--
	lbs/day[32]	3.1	--	--	--	--
Copper	µg/L	20	--	26	--	--
	lbs/day[32]	6.3	--	8.1	--	--
Selenium	µg/L	4.5	--	6.9	--	--
	lbs/day[32]	1.4	--	2.2	--	--
Total dissolved solids	mg/L	450	--	--	--	--
	lbs/day[32]	140,700	--	--	--	--
Sulfate	mg/L	100	--	--	--	--
	lbs/day[32]	31,130	--	--	--	--
Chloride	mg/L	100	--	--	--	--
	lbs/day[32]	31,130	--	--	--	--
Boron	mg/L	0.5	--	--	--	--
	lbs/day[32]	156	--	--	--	--

REVISED TENTATIVE

5. Whole Effluent Toxicity (WET)

Whole effluent toxicity (WET) testing protects receiving waters from the aggregate toxic effect of a mixture of pollutants in the effluent. An acute toxicity test is conducted over a short time period and measures mortality. A chronic toxicity test is conducted over a short or a longer period of time and may measure mortality, reproduction, and growth. A chemical at a low concentration could have chronic effects but no acute effects until the chemical was at a higher concentration. Because of the nature of industrial discharges into the POTW sewershed, it is possible that toxic constituents could be present in the San Jose Creek WRP effluent, or could have synergistic or additive effects.

A total of 83 chronic and four acute whole effluent toxicity (WET) tests and 74 chronic and four acute toxicity test were conducted on San Jose Creek East WRP and San Jose Creek West WRP final effluent, respectively, between January 2009 and 2013. No exceedances of the 1.0 TUc monthly median accelerated testing trigger were reported in the effluent from either plant. However, a reasonable potential was identified for toxicity exceedances because endpoint TUcs, recorded for a single species on a specific day, were recorded above 1 TUc at both plants.

Sampling of East WRP effluent on March 6, 2012 showed a TUc for Pimpephales growth of 1.3. Accelerated testing did not duplicate this result. On November 10, 2009, the Ceriodaphnia reproductive test had a TUc greater than 5 and was part of a single sampling event that month, but no accelerated sampling was conducted. On September 8, 2011 anomalous results were reported, but additional monitoring did not reveal the cause of the toxicity.

Sampling of San Jose Creek West WRP effluent on August 12, 2010, and May 10, 2011, showed Ceriodaphnia reproduction TUc of 2.5 and 1.3, respectively, but the observations were not duplicated during accelerated testing. On October 15, 2009, Ceriodaphnia

reproduction tests had a TUc of 1.3 and were part of a single sampling event that month, but no accelerated sampling was conducted. On September 10 and December 10 of 2009, invalid tests were reported, but no additional monitoring was conducted during the month.

The 2009 permit contained final effluent limitations for both acute toxicity and chronic toxicity, but the 2014 permit only contains final effluent limitations for chronic toxicity, expressed as a median monthly and a maximum daily, since chronic toxicity is a more stringent requirement than acute toxicity. Removal of the numeric acute toxicity effluent limitations from the 2009 permit does not constitute backsliding because of this.Effluent limitations for chronic toxicity were established because effluent data showed that there is reasonable potential for the chronic toxicity to be present in the discharge at levels that would cause or contribute to a violation of the water quality standard. The Permittee's past compliance summary is discussed in greater detail in section II.D. of this Fact Sheet.

In the past, the State Water Board reviewed the circumstances warranting a numeric chronic toxicity effluent limitation when there is reasonable potential with respect to SWRCB/OCC Files A-1496 & A-1496(a) [Los Coyotes/Long Beach Petitions]. On September 16, 2003, at a public hearing, the State Water Board adopted Order No. 2003-0012 (Los Coyotes Order) deferring the issue of numeric chronic toxicity effluent limitations until a subsequent Phase of the SIP is adopted. In the meantime, the State Water Board replaced the numeric chronic toxicity limit with a narrative effluent limitation and a 1.0 TUc trigger, in the Long Beach and Los Coyotes WRP NPDES permits. The San Jose Creek WRP 2009 permit contained a narrative chronic toxicity limitation consistent with the direction received by the State Water Board.

However, many facts have changed since the State Water Board adopted the Los Coyotes Order in 2003. USEPA published two new guidance documents with respect to chronic toxicity testing; the Los Angeles Regional Water Board adopted NPDES permits for industrial facilities incorporating TST-based effluent limits for chronic toxicity and has adopted numeric chronic toxicity effluent limits for industrial facilities and POTWs with TMDL WLAs of 1 TUc; and the Santa Ana Regional Water Board adopted an NPDES permit for a POTW incorporating TST-based effluent limits for chronic toxicity. In addition to these and other factual developments, the State Water Board has not adopted a revised policy that addresses chronic toxicity effluent limitations in NPDES permits for inland discharges, as anticipated by the Los Coyotes Order. Because the Los Coyotes Order explicitly "declined to make a determination … regarding the propriety of the final numeric effluent limitations for chronic toxicity…," (Los Coyotes Order, p. 9) and because of the differing facts before the Regional Water Board in 2014 as compared to the facts that were the basis for the Los Coyotes Order in 2003, the Regional Water Board concludes that the Los Coyotes Order does not require inclusion of narrative rather than numeric effluent limitations for chronic toxicity. Further, the Regional Water Board finds that numeric effluent limitations for chronic toxicity are necessary, feasible, and appropriate because effluent data exhibited reasonable potential to cause or contribute to an exceedance of the toxicity water quality objective. The San Jose Creek WRP 2015 permit contains numeric chronic toxicity effluent limitations. Compliance with the chronic toxicity requirements contained in the 2015 Order shall be determined in accordance with sections VII.J of the WDR.

REVISED TENTATIVE

On July 7, 2014, the Chief Deputy of the Water Quality Division announced that the State Water Board would be releasing a revised version of the Chronic Toxicity Plan for public comment within a few weeks. Regional Water Board staff await its release. Because effluent data exhibited reasonable potential to cause or contribute to an exceedance of the water quality objective, the San Jose WRP 2015 permit contains numeric chronic toxicity effluent limitations. Compliance with the chronic toxicity requirement contained in the 2015 Order shall be determined in accordance to sections VII.J of the WDR.Never the less, this Order contains a reopener to require the Regional Water Board to modify the permit, if necessary, to make it consistent with any new policy, law, or regulation.For this permit, chronic toxicity in the discharge is evaluated using a median monthly effluent limitation and a maximum daily effluent limitation that utilizes USEPA's 2010 Test of Significant Toxicity (TST) hypothesis testing approach. The chronic toxicity effluent limitations are expressed as "Pass" for the median monthly summary results and as "Pass" or "<50% Effect" for each maximum daily individual results.

In January 2010, USEPA published a guidance document titled; "*EPA Regions 8, 9 and 10 Toxicity Training Tool*," which among other things discusses permit limit expression for chronic toxicity. The document acknowledges that NPDES regulations at 40 CFR 122.45(d) require that all permit limits be expressed, unless impracticable, as an average weekly limit (AWL) and Average Monthly Limitation (AML) for POTWs. Following Section 5.2.3 of the Technical Support Document (TSD), the use of an AWL is not appropriate for WET. In lieu of an AWL for POTWs, USEPA recommends establishing a Maximum Daily Limitation (MDL) for toxic pollutants and pollutants in water quality permitting, including WET. This is appropriate for two reasons. The basis for the average weekly requirement for POTWs derives from secondary treatment regulations and is not related to the requirement to assure achievement of water quality standard. Moreover, an average weekly requirement comprising up to seven daily samples could average out daily peak toxic concentrations for WET and therefore, the discharge's potential for causing acute and chronic effects would be missed. It is impracticable to use an AWL, because short-term spikes of toxicity levels that would be permissible under the 7-day average scheme would not be adequately protective of all beneficial uses. The MDL is the highest allowable value for the discharge measured during a calendar day or 24-hour period representing a calendar day. The AML is the highest allowable value for the average of daily discharges obtained over a calendar month. For WET, this is the average of individual WET test results for that calendar month. However, in cases where a chronic mixing zone is not authorized, EPA Regions 8, 9 and 10 continue to recommend that the AML for chronic WET should be expressed as a median monthly limit (MML).

Later in June 2010, USEPA published another guidance document titled, *National Pollutant Discharge Elimination System Test of Significant Toxicity Implementation Document* (EPA 833-R-10-003, June 2010), in which they recommend the following: "Permitting authorities should consider adding the TST approach to their implementation procedures for analyzing valid WET data for their current NPDES WET Program." The TST approach is another statistical option for analyzing valid WET test data. Use of the TST approach does not result in any changes to USEPA's WET test methods. Section 9.4.1.2 of USEPA's *Short-term Methods for Estimating the Chronic Toxicity of Effluents and Receiving Waters to Freshwater Organisms* (EPA/821/R-02/013, 2002), recognizes that, "the statistical methods in this manual are not the only possible methods of statistical analysis." The TST approach can be applied to acute (survival) and chronic

REVISED TENTATIVE

(sublethal) endpoints and is appropriate to use for both freshwater and marine EPA WET test methods.

USEPA's WET testing program and acute and chronic WET methods rely on the measurement result for a specific test endpoint, not upon achievement of specified concentration-response patterns to determine toxicity. USEPA's WET methods do not require achievement of specified effluent or ambient concentration-response patterns prior to determining that toxicity is present.[34] Nevertheless, USEPA's acute and chronic WET methods require that effluent and ambient concentration-response patterns generated for multi-concentration acute and chronic toxicity tests be reviewed—as a component of test review following statistical analysis—to ensure that the calculated measurement result for the toxicity test is interpreted appropriately (EPA-821-R-02-012, section 12.2.6.2; EPA-821-R-02-013, section 10.2.6.2.). In 2000, EPA provided guidance for such reviews to ensure that test endpoints for determining toxicity based on the statistical approaches utilized at the time the guidance was written (NOEC, LC50's, IC25s) were calculated appropriately (EPA 821-B-00-004).

USEPA designed its 2000 guidance as a standardized step-by step review process that investigates the causes for ten commonly observed concentration-response patterns and provides for the proper interpretation of the test endpoints derived from these patterns for NOECs, LC50s, and IC25s, thereby reducing the number of misclassified test results. The guidance provides one of three determinations based on the review steps: that calculated effect concentrations are reliable and should be reported, that calculated effect concentrations are anomalous and should be explained, or that the test was inconclusive and should be repeated with a newly collected sample. The standardized review of the effluent and receiving water concentration-response patterns provided by EPA's 2000 guidance decreased discrepancies in data interpretation for NOEC, LC50, and IC25 test results, thereby lowering the chance that a truly nontoxic sample would be misclassified and reported as toxic.

Appropriate interpretation of the measurement result from USEPA's TST statistical approach (pass/fail) for effluent and receiving water samples is, by design, independent from the concentration-response patterns of the toxicity tests for those samples. Therefore, when using the TSTstatistical approach, application of EPA's 2000 guidance on effluent and receiving waters concentration-response patterns will not improve the appropriate interpretation of TST results as long as all Test Acceptability Criteria and other test review procedures—including those related to Quality Assurance for effluent and receiving water toxicity tests, reference toxicity tests, and control performance (mean, standard deviation, and coefficient of variation)—described by the WET test methods manual and TST guidance, are followed. The 2000 guidance may be used to identify reliable, anomalous, or inconclusive concentration-response patterns and associated statistical results to the extent that the guidance recommends review of test procedures and laboratory performance already recommended in the WET test methods manual. The guidance does not apply to single-concentration (IWC) and control statistical t-tests and does not apply to the statistical assumptions on which the TST is based. The Regional Water Board will not consider a concentration-response pattern as sufficient basis to determine that a TST t- test result for a toxicity test is anything other than valid, absent other evidence. In a toxicity laboratory, unexpected concentration-

[34] See, Supplementary Information in support of the Final Rule establishing WET test methods at 67 Fed.Reg. 69952, 69963, Nov. 19, 2002.

REVISED TENTATIVE

response patterns should not occur with any regular frequency and consistent reports of anomalous or inconclusive concentration-response patterns or test results that are not valid will require an investigation of laboratory practices.

Any Data Quality Objectives or Standard Operating Procedure used by the toxicity testing laboratory to identify and report valid, invalid, anomalous, or inconclusive effluent or receiving water toxicity test measurement results from the TST statistical approach which include a consideration of concentration-response patterns and/or PMSDs must be submitted for review by the Regional Water Board, in consultation with USEPA and the State Water Board's Quality Assurance Officer and Environmental Laboratory Accreditation Program (40 CFR 122.44(h)). As described in the bioassay laboratory audit directives to the San Jose Creek Water Quality Laboratory from the State Water Resources Control Board dated August 7, 2014, and from the USEPA dated December 24, 2013, the PMSD criteria only apply to compliance for NOEC and the sublethal endpoints of the NOEC, and therefore are not used to interpret TST results.

REVISED TENTATIVE

D. Final Effluent Limitation Considerations

1. Anti-Backsliding Requirements

Sections 402(o) and 303(d)(4) of the CWA and federal regulations at 40 CFR § 122.44(l) prohibit backsliding in NPDES permits. These anti-backsliding provisions require effluent limitations in a reissued permit to be as stringent as those in the previous permit, with some exceptions where limitations may be relaxed. The effluent limitations in this Order are at least as stringent as the effluent limitations in the previous Order, with the exception of the relaxation of effluent limitations for copper at EFF 001/001A/001B; lead at EFF-001A, EFF-1B and EFF-002; ammonia as nitrogen at EFF-002 and EFF-003; and selenium at EFF 002. In addition, several effluent limitations are removed from this Order: effluent limitations at EFF-001 for selenium, lead, MBAS, TDS, sulfate, chloride, boron, nitrite as nitrogen; EFF-001A and EFF-001B for selenium; and EFF-003 for selenium.

Sections 402(o)(2) and 303(d)(4) of the Clean Water Act provides statutory exceptions to the general prohibition of backsliding contained in CWA section 402(o)(1). One of these exceptions allows backsliding if "information is available which was not available at the time of permit issuance (other than revised regulations, guidance, or test methods) and which would have justified the application of a less stringent effluent limitation at the time of permit issuance" (Section (B)(i)).). A second exception is found in section 303(d)(4)(B) which allows revision of effluent limitations based on a water quality standard, where the quality of the receiving water equals or exceeds levels necessary to protect designated uses, if such revision is subject to and consistent with the antidegradation policy. A third exception found in section 303(d)(4)(A) allows the revision of an effluent limitation based on a total maximum daily load if the cumulative effect of all such revised effluent limitations based on the total maximum daily load will assure the attainment of the water quality standard. The effluent limitations for discharges from EFF-001 are revised to be consistent with the waste load allocations and water quality standards for discharges to Reach 1 of the San Gabriel River. A concrete apron at the outfall prevents groundwater recharge. As a result, beneficial uses and water quality objectives from Reach 1, which has a concrete lined bottom, were applied to discharges from EFF-001. The previous more stringent limits for nitrate plus nitrite as nitrogen and limits for Total Dissolved

Solids, Sulfate, Chloride, and Boron-are no longer justified because there are no applicable water quality objectives for Reach 1 of the San Gabriel River. The previous more stringent limit for MBAS is no longer justified because it protects the groundwater recharge beneficial use. This information would have justified the application of a less stringent effluent limitation at the time the previous permit was issued. The effluent limitations for lead, copper, and selenium are based on a revised interpretation of the San Gabriel River Metals TMDL. The cumulative effect of the revised effluent limitations will assure attainment of the water quality standard, and is therefore consistent with CWA section 303(d)(4)(A). Relaxed effluent limitations for ammonia nitrogen are based on new monitoring information and updated coefficients of variation. This information would have justified the application of a less stringent effluent limitation at the time the previous permit was issued. The removal of effluent limitations for discharges from EFF-001A, EFF-001B, and EFF-003 are based on a revised reasonable potential analysis.

2. Antidegradation

40 CFR § 131.12 requires that state water quality standards include an antidegradation policy consistent with the federal antidegradation policy. On October 28, 1968, the State Water Board established California's antidegradation policy when it adopted Resolution No. 68-16, Statement of Policy with Respect to Maintaining the Quality of the Waters of the State. Resolution No. 68-16 requires that existing water quality be maintained unless degradation is justified based on specific findings. The State Water Board has, in State Water Board Order No. 86-17 and an October 7, 1987 guidance memorandum, interpreted Resolution No. 68-16 to be fully consistent with the federal antidegradation policy contained in 40 CFR § 131.12. Similarly, CWA section 303(d)(4)(B) and 40 CFR § 131.12 require that all permitting actions be consistent with the federal antidegradation policy. Together, the state and federal antidegradation policies are designed to ensure that a water body will not be degraded resulting from the permitted discharge. The Regional Water Board's Basin Plan implements, and incorporates by reference, both the state and federal antidegradation policies.

San Gabriel River is included on the 303(d) list for many pollutants. The renewal of this NPDES permit is consistent with the anti-degradation policy because it is not expected to allow degradation of receiving water quality. No reduction in the existing level of wastewater treatment is anticipated. Relaxation of the effluent limitations as described in the prior section of this Fact Sheet will continue to assure the attainment of water quality standards where the quality of the receiving water is impaired for that pollutant. .

Effluent limitations for discharges from EFF-001, for MBAS, nitrite as nitrogen, and nitrate plus nitrite as nitrogen, TDS, sulfate, chloride, boron, lead, and selenium are based on new information about the outfall construction and are revised to be consistent with the waste load allocations and water quality standards for discharges to Reach 1 of the San Gabriel River. A concrete apron at the outfall prevents groundwater recharge. As a result, beneficial uses and water quality objectives from Reach 1, which has a concrete lined bottom, were applied to discharges from EFF-001. Application of the water quality standards and waste load allocations for Reach 1 will protect beneficial uses in the receiving water and appropriately reflect the concrete-lined character of the river downstream of the outfall. The relaxation of these effluent limitations are consistent with maximum benefit to the people of the state, will not unreasonably affect present and anticipated beneficial uses, and will not result in water quality less than that prescribed by the Basin Plan. The effluent limitations require the best practicable treatment or

REVISED TENTATIVE

control of the discharge necessary to assure that pollution or nuisance will not occur and the highest quality of water consistent with maximum benefit to the people of the state will be maintained.

The removal of effluent limitations for discharges from EFF-001A, EFF-001B, and EFF-003 for selenium are based on a revised reasonable potential analysis. These discharges are not expected to degrade receiving water quality based on monitoring data acquired over the prior permit term.

The relaxation of the effluent limitation from EFF-002 and EFF-003 for ammonia nitrogen is consistent with maximum benefit to the people of the state, will not unreasonably affect present and anticipated beneficial uses, and will not result in water quality less than that prescribed by the SSOs. The effluent limitation for ammonia nitrogen requires the best practicable treatment or control of the discharge necessary to assure that pollution or nuisance will not occur and the highest quality of water consistent with maximum benefit to the people of the state will be maintained. Existing instream uses and the level of water quality necessary to protect the existing uses will be maintained and protected. Any lowering of water quality allowed by this Order is necessary to accommodate important economic and social development in the area, and water quality will continue to protect existing uses fully.

3. Stringency of Requirements for Individual Pollutants

This Order contains both TBELs and WQBELs for individual pollutants. The technology-based effluent limitations consist of restrictions on BOD, TSS, pH, and percent removal of BOD and TSS. Restrictions on BOD, TSS and pH are discussed in section IV.B. of the Fact Sheet. This Order's technology-based pollutant restrictions implement the minimum, applicable federal technology-based requirements. In addition, this Order contains effluent limitations more stringent than the minimum, federal technology-based requirements that are necessary to meet water quality standards.

Water quality-based effluent limitations have been scientifically derived to implement WQOs that protect beneficial uses. Both the beneficial uses and the WQOs have been approved pursuant to federal law and are the applicable federal water quality standards. To the extent that toxic pollutant WQBELs were derived from the CTR, the CTR is the applicable standard pursuant to 40 CFR § 131.38. The scientific procedures for calculating the individual water quality-based effluent limitations for priority pollutants are based on the CTR-SIP, which was approved by USEPA on May 18, 2000. All beneficial uses and WQOs contained in the Basin Plan were approved under state law and submitted to and approved by USEPA prior to May 30, 2000. Any WQOs and beneficial uses submitted to USEPA prior to May 30, 2000, but not approved by USEPA before that date, are nonetheless "applicable water quality standards for purposes of the CWA" pursuant to 40 CFR § 131.21(c)(1). Collectively, this Order's restrictions on individual pollutants are no more stringent than required to implement the requirements of the CWA and the applicable water quality standards for purposes of the CWA.

REVISED TENTATIVE

Table F-23. Summary of Final Effluent Limitations for Discharge Point EFF-001, EFF-001A and EFF-001B

Parameter	Units	Effluent Limitations					Basis
		Average Monthly	Average Weekly	Maximum Daily	Instant-aneous Min.	Instant-aneous Max.	
Final Effluent Limitations for Discharge Point No. 001, 001A and 001B							
$BOD_5 20^oC$	mg/L	20	30	45	--	--	TBEL
	lbs/day[35]	16,700	25,000	37,500	--	--	
Total Suspended Solids (TSS)	mg/L	15	40	45	--	--	TBEL
	lbs/day	12,500	33,400	37,500	--	--	
pH	standard units	--	--	--	6.5	8.5	TBEL
Removal Efficiency for BOD and TSS	%	85	--	--	--	--	TBEL
Oil and Grease	mg/L	10	--	15	--	--	TBEL
	lbs/day	8,340		12,50	--	--	
Settleable Solids	ml/L	0.1	--	0.3	--	--	TBEL
Total Residual Chlorine	mg/L	--	--	0.1	--	--	Basin Plan
Benzo(k)fluoranthene	µg/L	0.049	--	0.098	--	--	CTR/ SIP
	lbs/day	0.04	--	0.08	--	--	
Dibenzo(a,h)anthracene	µg/L	0.049	--	0.098	--	--	CTR/ SIP
	lbs/day	0.04	--	0.08	--	--	
Indeno(1,2,3cd) pyrene	µg/L	0.049	--	0.098	--	--	CTR/ SIP
	lbs/day	0.04	--	0.08	--	--	
Chronic Toxicity[36]	Pass or Fail, %Effect (TST)	Pass[37]	--	Pass or %Effect <50	--	--	TST & USEPA Guidance; Basin Plan
Final Effluent Limitations for Discharge Point No. 001 ONLY							
Ammonia Nitrogen (ELS Present)	mg/L	4.0	--	6.0	--	--	Basin Plan
	lbs/day	3,340	--	5,004	--	--	
Ammonia Nitrogen (ELS Absent)	mg/L	4.9	--	6.8	--	--	Basin Plan
	lbs/day	4,087	--	5,670	--	--	

REVISED TENTATIVE

[35] The mass emission rates are based on the East and West WRP plant design flow rate of 100 MGD, and are calculated as follows: Flow (MGD) x Concentration (mg/L) x 8.34 (conversion factor) = lbs/day.

[36] The median monthly effluent limitation (MMEL) shall be reported as “Pass” or “Fail”. The maximum daily effluent limitation (MDEL) shall be reported as “Pass” or “Fail” and “% Effect”. The MMEL for chronic toxicity shall only apply when there is a discharge more than one day in a calendar month period. During such calendar months, up to three independent toxicity tests may be conducted when one toxicity test results in “Fail”.

[37] This is a Median Monthly Effluent Limitation.

Parameter	Units	Effluent Limitations					Basis
		Average Monthly	Average Weekly	Maximum Daily	Instant-aneous Min.	Instant-aneous Max.	
Copper (Dry weather)	µg/L	17	--	22	--	--	TMDL
Final Effluent Limitations for Discharge Point No. 001A and 001B ONLY							
Total dissolved solids	mg/L	750	--	--	--	--	Basin Plan
	lbs/day	625,500	--	--	--	--	
Sulfate	mg/L	300	--	--	--	--	Basin Plan
	lbs/day	250,200	--	--	--	--	
Chloride	mg/L	180	--	--	--	--	Basin Plan
	lbs/day	150,100	--	--	--	--	
Boron	mg/L	1.0	--	--	--	--	Basin Plan
	lbs/day	830					
MBAS	mg/L	0.5	--	--	--	--	Basin Plan
	lbs/day	417	--	--	--	--	
Ammonia Nitrogen (ELS Present)	mg/L	4.0	--	6.0	--	--	Basin Plan
	lbs/day	3,340	--	5,004	--	--	
Ammonia Nitrogen (ELS Absent)	mg/L	4.9	--	6.8	--	--	Basin Plan
	lbs/day	4,090	--	5,670	--	--	
Nitrate + Nitrite as Nitrogen	mg/L	8	--	--	--	--	Basin Plan
	lbs/day	6,670	--	--	--	--	
Nitrite (as N)	mg/L	1.0	--	--	--	--	Basin Plan
	lbs/day	830	--	--	--	--	
Lead (Wet weather)	µg/L	--	--	166[38]	--	--	TMDL
Copper	µg/L	18	--	24	--	--	CTR/ SIP
	lbs/day	15	--	20	--	--	
Total Trihalomethanes	µg/L	80	--	--	--	--	TSD & USEPA Guidance; Basin Plan
	lbs/day	66.7	--	--	--	--	

REVISED TENTATIVE

[38] This final effluent limitation for lead is derived from the wet weather final waste load allocation, as set forth in the *Total Maximum Daily Loads for Metals and Selenium for the San Gabriel River and Impaired Tributaries (SGR Metals TMDL)*, promulgated by USEPA Region IX, on March 26, 2007. Consistent with the Implementation Recommendations of the *SGR Metals TMDL*, the wet weather waste load allocation was translated into effluent limitations by applying the SIP procedures. This effluent limitation applies only during wet weather, when the flow in the San Gabriel River is greater than or equal to 260 cubic feet per second (cfs), measured at USGS flow gauging station 11087020, located above the Whittier Narrows dam.

Table F-24. Summary of Final Effluent Limitations for Discharge Point EFF-002,

Parameter	Units	Effluent Limitations					Basis
		Average Monthly	Average Weekly	Maximum Daily	Instant-aneous Min.	Instant-aneous Max.	
$BOD_5 20^oC$	mg/L	20	30	45	--	--	Basin Plan
	lbs/day[39]	10,400	15,600	23,500	--	--	
Total Suspended Solids (TSS)	mg/L	15	40	45	--	--	Basin Plan
	lbs/day	7,820	20,900	23,500	--	--	
pH	standard units	--	--	--	6.5	8.5	Basin Plan
Removal Efficiency for BOD and TSS	%	85	--	--	--	--	Basin Plan
Oil and Grease	mg/L	10	--	15	--	--	Basin Plan
	lbs/day	5,210		7,820	--	--	
Settleable Solids	ml/L	0.1	--	0.3	--	--	Basin Plan
Total Residual Chlorine	mg/L	--	--	0.1	--	--	Basin Plan
Total dissolved solids	mg/L	750	--	--	--	--	Basin Plan
	lbs/day	391,000	--	--	--	--	
Sulfate	mg/L	300	--	--	--	--	Basin Plan
	mg/L	156,000	--	--	--	--	
Chloride	mg/L	180	--	--	--	--	Basin Plan
	lbs/day	93,800	--	--	--	--	
Boron	mg/L	1.0	--	--	--	--	Basin Plan
	lbs/day	521	--	--	--	--	
MBAS	mg/L	0.5	--	--	--	--	Basin Plan
	lbs/day	261	--	--	--	--	
Ammonia Nitrogen (ELS Present)	mg/L	4.2	--	6.1	--	--	Basin Plan
	lbs/day	2,190		3,180	--	--	
Ammonia Nitrogen (ELS Absent)	mg/L	5.4	--	7.8	--	--	Basin Plan
	lbs/day	2,800		4,070	--	--	
Nitrate plus nitrite as nitrogen	mg/L	8	--	--	--	--	Basin Plan
	lbs/day	4,170	--	--	--	--	
Nitrite (as N)	mg/L	1	--	--	--	--	Basin Plan
	lbs/day	521	--	--	--	--	
Lead [Wet weather]	µg/L	--	--	166[40]	--	--	TMDL

REVISED TENTATIVE

[39] The mass emission rates are based on the plant flow rate of 62.5 MGD, and are calculated as follows: Flow (MGD) x Concentration (mg/L) x 8.34 (conversion factor) = lbs/day.

[40] This final effluent limitation for lead is derived from the wet weather final waste load allocation, as set forth in the *Total Maximum Daily Loads for Metals and Selenium for the San Gabriel River and Impaired Tributaries (SGR Metals TMDL)*, promulgated by USEPA Region IX, on March 26, 2007. Consistent with the Implementation Recommendations of the *SGR Metals TMDL*, the wet weather waste load allocation was translated into effluent limitations by applying the SIP

Parameter	Units	Effluent Limitations					Basis
		Average Monthly	Average Weekly	Maximum Daily	Instant-aneous Min.	Instant-aneous Max.	
Selenium [Dry weather]	µg/L	4.6	--	6.5	--	--	TMDL
	lbs/day	2.4	--	3.4	--	--	
Chrysene	µg/L	.049	--	.098	--	--	CTR/ SIP
	lbs/day	0.026	--	0.051	--	--	
Dibenzo(a,h)anthracene	µg/L	.049	--	.098	--	--	CTR/ SIP
	lbs/day	0.026	--	0.051	--	--	
Indeno(1,2,3cd) pyrene	µg/L	.049	--	.098	--	--	CTR/ SIP
	lbs/day	0.026	--	0.051	--	--	
Benzo(k) fluoranthene	µg/L	.049	--	.098	--	--	CTR/ SIP
	lbs/day	0.026	--	0.051	--	--	
Total Trihalomethanes	µg/L	80	--	--	--	--	TST & USEPA Guidance; Basin Plan
	lbs/day	41.7	--	--	--	--	
Chronic Toxicity[41]	Pass or Fail, %Effect (TST)	Pass[42]	--	Pass or %Effect <50	--	--	TST & USEPA Guidance; Basin Plan

Table F-25. Summary of Final Effluent Limitations for Discharge Point EFF-003, EFF-004, and EFF-005

Parameter	Units	Effluent Limitations					Basis
		Average Monthly	Average Weekly	Maximum Daily	Instant-aneous Min.	Instant-aneous Max.	
Final Effluent Limitations or Discharge Point EFF-003, EFF-004 and EFF-005.							
$BOD_5 20^oC$	mg/L	20	30	45	--	--	Basin Plan
	lbs/day[43]	6,250	9,380	14,100	--	--	

procedures. This effluent limitation applies only during wet weather, when the flow in the San Gabriel River is greater than or equal to 260 cubic feet per second (cfs), measured at USGS flow gauging station 11087020, located above the Whittier Narrows dam.

[41] The median monthly effluent limitation (MMEL) shall be reported as “Pass” or “Fail”. The maximum daily effluent limitation (MDEL) shall be reported as “Pass” or “Fail” and “% Effect”. The MMEL for chronic toxicity shall only apply when there is a discharge more than one day in a calendar month period. During such calendar months, up to three independent toxicity tests may be conducted when one toxicity test results in “Fail”.

[42] This is a Median Monthly Effluent Limitation.

[43] The mass emission rates are based on the plant design flow rate of 37.5 MGD, and are calculated as follows: Flow (MGD) x Concentration (mg/L) x 8.34 (conversion factor) = lbs/day.

REVISED TENTATIVE

Parameter	Units	Effluent Limitations					Basis
		Average Monthly	Average Weekly	Maximum Daily	Instant-aneous Min.	Instant-aneous Max.	
Total Suspended Solids (TSS)	mg/L	15	40	45	--	--	Basin Plan
	lbs/day	4,690	12,500	14,074	--	--	
pH	standard units	--	--	--	6.5	8.5	Basin Plan
Removal Efficiency for BOD and TSS	%	85	--	--	--	--	Basin Plan
Oil and Grease	mg/L	10	--	15	--	--	Basin Plan
	lbs/day	3,130		4,690	--	--	
Settleable Solids	ml/L	0.1	--	--	--	--	Basin Plan
Total Residual Chlorine	mg/L	--	--	0.1	--	--	Basin Plan
	lbs/day			31.3			
MBAS	mg/L	0.5	--	--	--	--	Basin Plan
	lbs/day	157	--	--	--	--	
Nitrate plus Nitrite as Nitrogen	mg/L	8	--	--	--	--	Basin Plan
	lbs/day	2,500	--	--	--	--	
Nitrite as Nitrogen	mg/L	1	--		--	--	Basin Plan
	lbs/day	312	--		--	--	
Lead (wet weather)	µg/L	--	--	166	--	--	TMDL
Dibenzo(a,h)anthracene	µg/L	0.049	--	0.098	--	--	CTR/ SIP
	lbs/day	0.015	--	0.031	--	--	
Total Trihalomethanes	µg/L	80[44]	--	--	--	--	TSD & USEPA Guidance; Basin Plan
	lbs/day	25.0	--	--	--	--	
Chronic Toxicity[45]	Pass or Fail, %Effect (TST)	Pass[46]	--	Pass or %Effect <50	--	--	TST & USEPA Guidance; Basin Plan
Final Effluent Limitations or Discharge Point EFF-003 ONLY.							
Ammonia Nitrogen (ELS Present)	mg/L	4.0	--	6.3	--	--	Basin Plan
	lbs/day	1,250	--	1,970	--	--	

REVISED TENTATIVE

[44] This limitation is derived from Basin Plan water quality objective.

[45] The median monthly effluent limitation (MMEL) shall be reported as “Pass” or “Fail”. The maximum daily effluent limitation (MDEL) shall be reported as “Pass” or “Fail” and “% Effect”. The MMEL for chronic toxicity shall only apply when there is a discharge more than one day in a calendar month period. During such calendar months, up to three independent toxicity tests may be conducted when one toxicity test results in “Fail”.

[46] This is a Median Monthly Effluent Limitation.

Parameter	Units	Effluent Limitations					Basis
		Average Monthly	Average Weekly	Maximum Daily	Instant-aneous Min.	Instant-aneous Max.	
Ammonia Nitrogen (ELS Absent)	mg/L	5.0	--	7.8	--	--	Basin Plan
	lbs/day	1,560	--	2,440	--	--	
Total dissolved solid	mg/L	750	--	--	--	--	Basin Plan
	lbs/day	235,000	--	--	--	--	
Sulfate	mg/L	300	--	--	--	--	Basin Plan
	lbs/day	93,800	--	--	--	--	
Chloride	mg/L	180	--	--	--	--	Basin Plan
	lbs/day	56,300	--	--	--	--	
Boron	mg/L	1.0	--	--	--	--	Basin Plan
	lbs/day	312					
Final Effluent Limitations or Discharge Point EFF-004 and EFF-005 ONLY.							
Ammonia Nitrogen (ELS Absent)	mg/L	4.4	--	2.8	--	--	Basin Plan
	lbs/day	1380	--	880	--	--	
Arsenic	µg/L	10	--	--	--	--	TSD & USEPA Guidance; Basin Plan
	lbs/day	3.13	--	--	--	--	
Selenium	µg/L	4.5	--	6.86	--	--	CTR/ SIP
	lbs/day	1.4	--	2.15	--	--	
Copper	µg/L	20.29	--	25.99	--	--	CTR/ SIP
	lbs/day	6.34	--	8.13	--	--	
Total dissolved solids	mg/L	450	--	--	--	--	Basin Plan
	lbs/day	140,700	--	--	--	--	
Sulfate	mg/L	100	--	--	--	--	Basin Plan
	lbs/day	31,130	--	--	--	--	
Chloride	mg/L	100	--	--	--	--	Basin Plan
	lbs/day	31,130	--	--	--	--	
Boron	mg/L	.5	--	--	--	--	Basin Plan
	lbs/day	151	--	--	--	--	

REVISED TENTATIVE

E. Recycling Specifications

1. Current Reclaimed Project for Irrigation & Industrial Use.

The production, distribution, and reuse of recycled water are presently regulated under Water Reclamation Requirements (WRRs Order No. 87-51, adopted by this Board on April 27, 1987.) Pursuant to California Water Code section 13523, these WRRs were reviewed in 1997 and were readopted without change in Board Order No. 97-072, adopted on May 12, 1997. No irrigation takes place under this Order.

2. Water Recycling Requirements for Groundwater Recharge.

The Los Angeles County of Public Works, County Sanitation Districts of Los Angeles County, and Water Replenishment District of Southern California, collectively referred to as the Reclaimer, recharge the Rio Hondo and San Gabriel Spreading Grounds, located in the Montebello Forebay, with water purchased from JOS's Whittier Narrows, Pomona, and San Jose Creek WRPs, under Order No. 91-100, adopted by the Board on September 9, 1991, CI-5728, as amended by Order No. R4-2009-0048, adopted April 2, 2009, and by a June 4, 2013 letter from the Executive Officer to the Permittees and as amended by Order R4-2009-0048-A01 on April 10, 2014 for the Montebello Forebay.

REVISED TENTATIVE

V. RATIONALE FOR RECEIVING WATER LIMITATIONS

A. Surface Water

Receiving water limitations are based on WQOs contained in the Basin Plan and are a required part of this Order.

B. Groundwater

Limitations in this Order must protect not only surface receiving water beneficial uses, but also, the beneficial uses of underlying groundwater where there is a recharge beneficial use of the surface water. Sections of South Fork San Jose Creek and San Gabriel River, near the San Jose WRP discharge points, are designated as GWR beneficial use. Surface water from South Fork San Jose Creek percolates into the San Gabriel Valley Groundwater Basin with MUN beneficial use specified in the Basin Plan. Since groundwater from the Basin is used to provide drinking water to the community, the groundwater aquifers must be protected.

The issue of using MCLs as the basis for establishing final effluent limitations in an NPDES permit, to protect the GWR beneficial use of surface waters and the MUN beneficial use of the groundwater basins, has been addressed by the State Board in its WQO No. 2003-0009, in the Matter of the Petitions of County Sanitation District No. 2 of Los Angeles and Bill Robinson for Review of Waste Discharge Requirements Order No. R4-2002-0142 and Time Schedule Order No. R4-2002-0143 for the Whittier Narrows Water Reclamation Plant. The groundwater recharge (GWR) beneficial use is premised on a hydrologic connection between surface waters and groundwater, where the groundwater in this case is designated with an existing MUN beneficial use. Since there are no criteria or objectives specific to the GWR beneficial use, the Los Angeles Regional Water Board's Basin Plan, staff based effluent limitations for the GWR use on the groundwater MUN objectives. By doing so, the Regional Water Board ensures that the use of surface waters to recharge groundwater used as an existing drinking water source is protected. The fact that there are no criteria or objectives specific to the GWR beneficial use does not deprive the Regional Water Board of the ability to protect the use. The CWA contemplates enforcement of both beneficial uses as well as criteria in state water quality standards. In California, an NPDES permit also serves as waste discharge requirements under state law.

VI. RATIONALE FOR PROVISIONS

A. Standard Provisions

Standard Provisions, which apply to all NPDES permits in accordance with 40 C.F.R. section 122.41, and additional conditions applicable to specified categories of permits in accordance with 40 C.F.R. section 122.42, are provided in Attachment D. The Permittee must comply with

all standard provisions and with those additional conditions that are applicable under section 122.42.

Sections 122.41(a)(1) and (b) through (n) of 40 C.F.R. establish conditions that apply to all state-issued NPDES permits. These conditions must be incorporated into the permits either expressly or by reference. If incorporated by reference, a specific citation to the regulations must be included in the Order. Section 123.25(a)(12) of 40 C.F.R. allows the state to omit or modify conditions to impose more stringent requirements. In accordance with 40 C.F.R. section 123.25, this Order omits federal conditions that address enforcement authority specified in 40 C.F.R. sections 122.41(j)(5) and (k)(2) because the enforcement authority under the Water Code is more stringent. In lieu of these conditions, this Order incorporates by reference Water Code section 13387(e).

REVISED TENTATIVE

B. Special Provisions

1. Reopener Provisions

This provision is based on 40 CFR Part 123. The Regional Water Board may reopen the permit to modify permit conditions and requirements. Causes for modifications include the promulgation of new regulations, modification in sludge use or disposal practices, or adoption of new regulations by the State Water Board or Regional Water Board, including revisions to the Basin Plan.

2. Special Studies and Additional Monitoring Requirements

a. **Constituent of Emerging Concern (CEC)**. In recent years, the Los Angeles Regional Water Board has incorporated monitoring of a select group of man-made chemicals, particularly pesticides, pharmaceuticals and personal care products, known collectively as CECs, into permits issued to POTWs to better understand the propensity, persistence and effects of CECs in our environment. The Permittee has completed annual CEC monitoring for two years. The Regional Water Board has determined that two years is an appropriate time period to determine those CECs that are present in POTW effluent. Analysis under this section is for monitoring purposes only. Analytical results obtained for this study will not be used for compliance determination purposes, since the methods have not been incorporated into 40 CFR Part 136. A review of the data will determine if additional sampling is required.

b. **Antidegradation Analysis and Engineering Report for Proposed Plant Expansion.** In the event of any proposed plant expansion, this provision is based on the State Water Board Resolution No. 68-16, which requires the Regional Water Board in regulating the discharge of waste to maintain high quality waters of the state. The Permittee must demonstrate that it has implemented adequate controls (e.g., adequate treatment capacity) to ensure that high quality waters will be maintained. This provision requires the Permittee to clarify that it has increased plant capacity through the addition of new treatment system(s) to obtain alternative effluent limitations for the discharge from the treatment system(s). This provision requires the Permittee to report specific time schedules for the plants' projects. Prior to any plant expansion, this provision requires the Permittee to submit the Antidegradation Analysis and Engineering Report for the Proposed Plant Expansion to the Regional Water Board for approval.

c. **Operations Plan for Proposed Expansion.** This provision is based on section 13385(j)(1)(D) of the CWC and allows a time period not to exceed 90 days in which the Permittee may adjust and test the treatment system(s). This provision requires the Permittee to submit an Operations Plan describing the actions the Permittee will take during the period of adjusting and testing to prevent violations.

d. **Treatment Plant Capacity.**

The treatment plant capacity study required by this Order shall serve as an indicator for the Regional Water Board regarding Facility's increasing hydraulic capacity and growth in the service area.

3. Best Management Practices and Pollution Prevention

The requirement for a Pollutant Minimization Program (PMP)is based on the requirements of section 2.4.5 of the SIP.

4. Construction, Operation, and Maintenance Specifications

This provision is based on the requirements of 40 CFR § 122.41(e) and the previous Order.

5. Special Provisions for Municipal Facilities (POTWs Only)

a. **Biosolids Requirements.** To implement CWA section 405(d), on February 19, 1993, USEPA promulgated 40 CFR Part 503 to regulate the use and disposal of municipal sewage sludge. This regulation was amended on September 3, 1999. The regulation requires that producers of sewage sludge meet certain reporting, handling, and disposal requirements. It is the responsibility of the Permittee to comply with said regulations that are enforceable by USEPA, because California has not been delegated the authority to implement this program. The Permittee is also responsible for compliance with WDRs and NPDES permits for the generation, transport and application of biosolids issued by the State Water Board, other Regional Water Boards, Arizona Department of Environmental Quality or USEPA, to whose jurisdiction the Facility's biosolids will be transported and applied.

b. **Pretreatment Requirements.** This permit contains pretreatment requirements consistent with applicable effluent limitations, national standards of performance, and toxic and performance effluent standards established pursuant to sections 208(b), 301, 302, 303(d), 304, 306, 307, 403, 404, 405, and 501 of the CWA, and amendments thereto. This permit contains requirements for the implementation of an effective pretreatment program pursuant to section 307 of the CWA; 40 CFR 35 and 403; and/or Title 23, CCR section 2233.

c. **Spill Reporting Requirements.** This Order established a reporting protocol for how different types of spills, overflow or bypasses of raw or partially treated sewage from its collection system or treatment plant covered by this Order shall be reported to regulatory agencies.

The State Water Board issued General Waste Discharge Requirements for Sanitary Sewer Systems, Water Quality Order 2006-0003-DWQ (General Order) on May 2, 2006. The Monitoring and Reporting Requirements for the General Order were amended by Water Quality Order WQ 2008-0002-EXEC on February 20, 2008. The General Order requires public agencies that own or operate sanitary sewer systems with greater than one mile of pipes or sewer lines to enroll

REVISED TENTATIVE

for coverage under the General Order. The General Order requires agencies to develop sanitary sewer management plans (SSMPs) and report all sanitary sewer overflows (SSOs), among other requirements and prohibitions.

Furthermore, the General Order contains requirements for operation and maintenance of collection systems and for reporting and mitigating sanitary sewer overflows. Inasmuch that the Permittee's collection system is part of the system that is subject to this Order, certain standard provisions are applicable as specified in Provisions, section VI.C.5. For instance, the 24-hour reporting requirements in this Order are not included in the General Order. The Permittee must comply with both the General Order and this Order. The Permittee and public agencies that are discharging wastewater into the facility were required to obtain enrollment for regulation under the General Order by December 1, 2006.

In the past, the Los Angeles Regional Water Board has experienced loss of recreational use in coastal beaches and in recreational areas as a result of major sewage spills. The SSO requirements are intended to prevent or minimize impacts to receiving waters as a result of spills.

6. **Other Special Provisions** -- Not Applicable

7. **Compliance Schedules** -- Not Applicable

VII. RATIONALE FOR MONITORING AND REPORTING REQUIREMENTS

Section 308(a) of the federal Clean Water Act and sections 122.41(h), (j)-(l), 122,44(i), and 122.48 of Title 40 of the Code of Federal Regulations (40 CFR) require that all NPDES permits specify monitoring and reporting requirements. CWC sections 13267 and 13383 also authorizes the Regional Water Board to establish monitoring, inspection, entry, reporting, and recordkeeping requirements. The MRP establishes monitoring, reporting, and recordkeeping requirements that implement federal and state requirements. The following provides the rationale for the monitoring and reporting requirements contained in the MRP for this Facility.

A. Influent Monitoring

Influent monitoring is required to determine compliance with the permit conditions for BOD5 20°C and suspended solids removal rates; to assess treatment plant performance; to assess the effectiveness of the Pretreatment Program; and, as a requirement of the PMP

B. Effluent Monitoring

The Permittee is required to conduct monitoring of the permitted discharges in order to evaluate compliance with permit conditions. Monitoring requirements are given in the MRP Attachment E. This provision requires compliance with the MRP, and is based on 40 CFR parts 122.44(i), 122.62, 122.63, and 124.5. The MRP is a standard requirement in almost all NPDES permits (including this Order) issued by the Regional Water Board. In addition to containing definition of terms, it specifies general sampling/analytical protocols and the requirements of reporting spills, violation, and routine monitoring data in accordance with NPDES regulations, the CWC, and Regional Water Board policies. The MRP also contains sampling program specific for the Permittee's wastewater treatment plant. It defines the sampling stations and frequency, pollutants to be monitored, and additional reporting requirements. Pollutants to be monitored include all pollutants for which effluent limitations are specified. Further, in accordance with section 1.3 of the SIP, a periodic monitoring is required for all priority pollutants defined by the CTR, for which criteria apply and for which no

REVISED TENTATIVE

effluent limitations have been established, to evaluate reasonable potential to cause or contribute to an excursion above a water quality standard.

Monitoring for those pollutants expected to be present in the discharge from the Facility, will be required as shown on the MRP and as required in the SIP. Semi-annual monitoring for priority pollutants in the effluent is required in accordance with the Pretreatment requirements.

Monitoring frequency for constituents is based upon historic monitoring frequency, Best Professional Judgment and the following criteria

Criteria 1: Monitoring frequency will be monthly, for those pollutants with reasonable potential to exceed water quality objectives (monitoring has shown an exceedance of the objectives); or,

Criteria 2: Monitoring frequency will be quarterly for those pollutants in which some or all of the historic effluent monitoring data detected the pollutants, but without reasonable potential to exceed water quality objectives; or,

Criteria 3: Monitoring frequency will be semiannually, for those pollutants in which all of the historic effluent monitoring data have had non-detected concentrations of the pollutants and without current reasonable potential to exceed water quality objectives.

Table F-26. Effluent Monitoring Frequency Comparison

Parameter	Monitoring Frequency (2009 Permit)	Monitoring Frequency (2015 Permit)
Total waste flow	Continuous	No change
Total residual chlorine	Continuous	No change
Turbidity	Continuous	No change
Temperature	Daily	Weekly
pH	Daily	Weekly
Settleable solids	Daily	Weekly
Total suspended solids	Daily	Weekly
Oil and grease	Monthly	Quarterly
BOD	Weekly	No change
Dissolved oxygen	Monthly	No change
Total coliform	Daily	No change
Fecal Coliform	Daily	Weekly
E.coli	Daily	Weekly
Total Dissolved Solids	Monthly	No change
Sulfate	Monthly	No change
Chloride	Monthly	No change
Boron	Monthly	No change
MBAS	Monthly	Quarterly
CTAS	Monthly	No change
Ammonia nitrogen	Monthly	No change
Nitrate plus nitrite as nitrogen	Monthly	No change
Nitrite nitrogen	Monthly	No change
Total Nitrogen	Monthly	Quarterly

REVISED TENTATIVE

Parameter	Monitoring Frequency (2009 Permit)	Monitoring Frequency (2015 Permit)
Organic Nitrogen	Monthly	No change
Total Phosphorus	Monthly	No change
Orthophosphate-P	Monthly	No change
Surfactants (MBAS)	Monthly	No change
Surfactants (CTAS)	Monthly	No change
Total Hardness ($CaCO_3$)	Monthly	No change
Chronic toxicity	Monthly	No change
Bis(2-ethylhexyl)phthalate	Monthly	Semiannually
Iron	Quarterly	Semiannually
Fluoride	Quarterly	Semiannually
Antimony	Quarterly	Semiannually
Arsenic	Quarterly	Monthly
Cadmium	Quarterly	Semiannually
Chromium III	Quarterly	Semiannually
Chromium VI	Quarterly	Semiannually
Copper	Monthly	No change
Lead	Monthly	No change
Mercury	Quarterly	Semiannually
Nickel	Quarterly	Semiannually
Selenium	Monthly	No change
Silver	Quarterly	Semiannually
Thallium	Quarterly	Semiannually
Zinc	Quarterly	Semiannually
Cyanide	Quarterly	Semiannually
2,3,7,8-TCDD (Dioxin)	Semiannually	Semiannually
Benzo(a)pyrene	Semiannually	No change
Benzo(k)fluoranthene	Semiannually	Monthly
Chrysene	Semiannually	Monthly
Dibenzo(a,h)anthracene	Semiannually	Monthly
Indeno(1,2,3 cd)pyrene	Semiannually	Monthly
N-nitrosodimethylamine	Semiannually	Annually
Diazinon	Semiannually	Annually
Remaining USEPA priority pollutants excluding asbestos	Semiannually	No change
Radioactivity	Semiannually	No change
Perchlorate	Semiannually	Annually
1,4-Dioxane	Semiannually	Annually
1,2,3-Trichloropropane	Semiannually	Annually
MTBE	Semiannually	Annually

REVISED TENTATIVE

C. Whole Effluent Toxicity Testing Requirements

Whole effluent toxicity (WET) protects the receiving water quality from the aggregate toxic effect of a mixture of pollutants in the effluent. An acute toxicity test is conducted over a short time period and measures mortality. A chronic toxicity test is conducted over a longer period of time and may measure mortality, reproduction, and growth. Chronic toxicity is a more stringent requirement than acute toxicity. A chemical at a low concentration can have chronic effects but no acute effects until it gets to the higher level. For this permit, chronic toxicity in the discharge is evaluated using USEPA's 2010 Test of Significant Toxicity (TST) hypothesis testing approach, and is expressed as "Pass" or "Fail" and "Percent Effect" for the median monthly summary results and "Pass" or :"Fail" and "Percent Effect" for each individual chronic toxicity result. The chronic toxicity effluent limitations protect the narrative water quality objective in the Basin Plan. The rationale for WET testing has been discussed extensively in section IV.C.5. of this fact sheet.

D. Receiving Water Monitoring

1. Surface Water

Receiving water monitoring is required to determine compliance with receiving water limitations and to characterize the water quality of the receiving water.

2. Groundwater (Not Applicable)

E. Other Monitoring Requirements

1. Watershed Monitoring and Bioassessment Monitoring

The goals of the Watershed-wide Monitoring Program including the bioassessment monitoring for the South Fork San Jose Creek Watershed are to determine compliance with receiving water limits; monitor trends in surface water quality; ensure protection of beneficial uses; provide data for modeling contaminants of concern; characterize water quality including seasonal variation of surface waters within the watershed; assess the health of the biological community; and, determine mixing dynamics of effluent and receiving waters in the estuary.

VIII. Nuisance and California Water Code Section 13241 Factors

Some of the provisions/requirements in this Order are included to implement state law only. These provisions/requirements are not required or authorized under the federal CWA; consequently, violations of these provisions/requirements are not subject to the enforcement remedies that are available for NPDES violations. As required by CWC section 13263, the Regional Water Board has considered the need to prevent nuisance and the factors listed in CWC section 13241 in establishing the state law provisions/requirements. The Regional Water Board finds, on balance, that the state law requirements in this Order are reasonably necessary to prevent nuisance and to protect beneficial uses identified in the Basin Plan, and the section 13241 factors are not sufficient to justify failing to protect those beneficial uses.

A. Need to prevent nuisance

The state law requirements in this Order are required to prevent pollution or nuisance as defined in section 13050, subdivisions (l) and (m), of the CWC. Many are also required in accordance with narrative water quality objectives in the Basin Plan. These state requirements include, but are not limited to, groundwater limitations, spill prevention plans, operator certification, sanitary sewer overflow reporting, and requirements for standby or emergency power.

REVISED TENTATIVE

B. Past, present, and probable future beneficial uses of water

Chapter 2 of the Basin Plan identifies designated beneficial uses for water bodies in the Los Angeles Region. Beneficial uses of water relevant to this Order are also identified above in Section III.C.1

C. Environmental characteristics

Environmental characteristics of the hydrographic unit under consideration, including the quality of water available thereto, are discussed in the Region's Watershed Management Initiative Chapter, and are also available in State of the Watershed reports and the State's CWA Section 303(d) List of impaired waters. The environmental characteristics of the hydrographic unit, including the quality of available water, will be improved by compliance with the requirements of this Order.

D. Water quality conditions

Water quality conditions that could reasonably be achieved through the coordinated control of all factors which affect water quality in the area shall be considered. The beneficial uses of the water bodies in the San Gabriel River watershed can reasonably be achieved through the coordinate control of all factors that affect water quality in the area. TMDLs have been developed (as required by the Clean Water Act) for many of the impairments in the watershed. A number of Regional Water Board programs and actions are in place to address the water quality impairments in the watershed, including regulation of point source municipal and industrial discharges with appropriate NPDES permits and non-point source discharges such as irrigated agriculture. All of these regulatory programs control the discharge of pollutants to surface and ground waters to prevent nuisance and protect beneficial uses. These regulatory programs have resulted in watershed solutions and have improved water quality. Generally, improvements in the quality of the receiving waters impacted by the Permittee's discharges can be achieved by reducing the volume of discharges to receiving waters (e.g., through increased recycling), reducing pollutant loads through source control/pollution prevention, including operational source control such as public education (e.g., disposal of pesticides, pharmaceuticals, and personal care products into the sewer) and product or materials elimination or substitution, and removing pollutants through treatment.

E. Economic considerations

The Permittee did not present any evidence regarding economic considerations related to this Order. However, the Regional Water Board has considered the economic impact of requiring certain provisions pursuant to state law. The additional costs associated with complying with state law requirements are reasonably necessary to prevent nuisance and protect beneficial uses identified in the Basin Plan. Further, the loss of, or impacts to, beneficial uses would have a detrimental economic impact. Economic considerations related to costs of compliance are therefore not sufficient, in the Regional Water Board's determination, to justify failing to prevent nuisance and protect beneficial uses.

F. Need for developing housing within the region

The Regional Water Board has no evidence regarding the need for developing housing within the region or how the Permittee's discharge will affect that need. The Regional Water Board, however, does not anticipate that these state law requirements will adversely impact the need for housing in the area. The region generally relies on imported water to meet many of its water resource needs. Imported water makes up a vast majority of the region's water supply, with local groundwater, local surface water, and reclaimed water making up the remaining

REVISED TENTATIVE

amount. This Order helps address the need for housing by controlling pollutants in discharges, which will improve the quality of local surface and ground water, as well as water available for recycling and re-use. This in turn may reduce the demand for imported water thereby increasing the region's capacity to support continued housing development. A reliable water supply for future housing development is required by law, and with less imported water available to guarantee this reliability, an increase in local supply is necessary. Therefore, the potential for developing housing in the area will be facilitated by improved water quality.

G. Need to develop and use recycled water

The State Water Board's Recycled Water Policy requires the Regional Water Boards to encourage the use of recycled water. In addition, as discussed immediately above, a need to develop and use recycled water exists within the region, especially during times of drought. To encourage recycling, the Permittee is required by this Order to continue to explore the feasibility of recycling to maximize the beneficial reuse of tertiary treated effluent.

IX. PUBLIC PARTICIPATION

The Regional Water Board has considered the issuance of WDRs that will serve as an NPDES permit for San Jose Creek WRP. As a step in the WDR adoption process, the Regional Water Board staff has developed tentative WDRs and has encouraged public participation in the WDR adoption process.

A. Notification of Interested Parties

The Regional Water Board notified the Permittee and interested agencies and persons of its intent to prescribe WDRs for the discharge and provided an opportunity to submit written comments and recommendations. Notification was provided through the Whittier Daily News on December 17, 2014.

The public had access to the agenda and any changes in dates and locations through the Regional Water Board's website at http://www.waterboards.ca.gov/losangeles/.

B. Written Comments

Interested persons were invited to submit written comments concerning tentative WDRs as provided through the notification process. Comments where due either in person or by mail to the Executive Office at the Regional Water Board at the address above on the cover page of this Order, or by email submitted to losangeles@waterboards.ca.gov

To be fully responded to by staff and considered by the Regional Water Board, the written comments are due at the Regional Water Board office by 5:00 p.m. on January 19, 2015.

C. Public Hearing

The **Regional Water Board** held a public hearing on the tentative WDRs during its regular Board meeting on the following date and time and at the following location:

Date:	March 12, 2015
Time:	9:00 a.m.
Location:	Metropolitan Water District of Southern California, Board Room 700 North Alameda Street Los Angeles, California

REVISED TENTATIVE

Interested persons were invited to attend. At the public hearing, the Regional Water Board heard testimony pertinent to the discharge, WDRs, and permit. For accuracy of the record, important testimony was requested in writing.

D. Reconsideration of Waste Discharge Requirements

Any aggrieved person may petition the State Water Board to review the decision of the Regional Water Board regarding the final WDRs. The petition must be received by the State Water Board at the following address within 30 calendar days of the Regional Water Board's action:

State Water Resources Control Board
Office of Chief Counsel
P.O. Box 100, 1001 I Street
Sacramento, CA 95812-0100

For instructions on how to file a petition for review, see
http://www.waterboards.ca.gov/public_notices/petitions/water_quality/wqpetition_instr.shtml

E. Information and Copying

The Report of Waste Discharge, other supporting documents, including but not limited to the administrative record for the JOS Pomona and Whittier Narrows WRPs which were used as reference in the preparation of the San Jose Creek WRP NPDES permit, and comments received are on file and may be inspected at the address above at any time between 8:30 a.m. and 4:45 p.m., Monday through Friday. Copying of documents may be arranged through the Regional Water Board by calling (213) 576-6600.

F. Register of Interested Persons

Any person interested in being placed on the mailing list for information regarding the WDRs and NPDES permit should contact the Regional Water Board, reference this facility, and provide a name, address, and phone number.

G. Additional Information

Requests for additional information or questions regarding this order should be directed to Elizabeth Erickson at (213) 576 6665.

REVISED TENTATIVE

ATTACHMENT G – TOXICITY REDUCTION EVALUATION (TRE) WORK PLAN

REVISED TENTATIVE

INFORMATION AND DATA ACQUISITION

A. Operations and performance review

1. NPDES permit requirements
   a. Effluent limitations
   b. Special conditions
   c. Monitoring data and compliance history
2. POTW design criteria
   a. Hydraulic loading capacities
   b. Pollutant loading capacities
   c. Biodegradation kinetics calculations/assumptions
3. Influent and effluent conventional pollutant data
   a. Biochemical oxygen demand (BOD5)
   b. Chemical oxygen demand (COD)
   c. Suspended solids (SS)
   d. Ammonia
   e. Residual chlorine
   f. pH
4. Process control data
   a. Primary sedimentation - hydraulic loading capacity and BOD and SS removal
   b. Activated sludge - Food-to-microorganism (F/M) ratio, mean cell residence time (MCRT), mixed liquor suspended solids (MLSS), sludge yield, and BOD and COD removal
   c. Secondary clarification - hydraulic and solids loading capacity, sludge volume index and sludge blanket depth
5. Operations information
   a. Operating logs
   b. Standard operating procedures
   c. Operations and maintenance practices
6. Process sidestream characterization data
   a. Sludge processing sidestreams
   b. Tertiary filter backwash
   c. Cooling water
7. Combined sewer overflow (CSO) bypass data
   a. Frequency

b. Volume

8. Chemical coagulant usage for wastewater treatment and sludge processing
   a. Polymer
   b. Ferric chloride
   c. Alum

B. POTW influent and effluent characterization data

1. Toxicity

2. Priority pollutants

3. Hazardous pollutants

4. SARA 313 pollutants,

5. Other chemical-specific monitoring results

C. Sewage residuals (raw, digested, thickened and dewatered sludge and incinerator ash) characterization data

D. EP toxicity

1. Toxicity Characteristic Leaching Procedure (TCLP)

2. Chemical analysis

E. Industrial waste survey (IWS)

1. Information on IUs with categorical standards or local limits and other significant non-categorical IUs

2. Number of IUs

3. Discharge flow

4. Standard Industrial Classification (SIC) code

5. Wastewater flow

   a. Types and concentrations of pollutants in the discharge
   b. Products manufactured

6. Description of pretreatment facilities and operating practices

7. Annual pretreatment report

8. Schematic of sewer collection system

REVISED TENTATIVE

9. POTW monitoring data
    a. Discharge characterization data
    b. Spill prevention and control procedures
    c. Hazardous waste generation
10. IU self-monitoring data
    a. Description of operations
    b. Flow measurements
    c. Discharge characterization data
    d. Notice of sludge loading
    e. Compliance schedule (if out of compliance)
11. Technically based local limits compliance reports
12. Waste hauler monitoring data manifests
13. Evidence of POTW treatment interferences (i.e., biological process inhibition

REVISED TENTATIVE

ATTACHMENT H – PRETREATMENT REPORTING REQUIREMENTS

The Joint Outfall System (Permittee or District) is required to submit annual Pretreatment Program Compliance Report (Report) to the Regional Water Board and United States Environmental Protection Agency, Region 9 (USEPA). This Attachment outlines the minimum reporting requirements of the Report. If there is any conflict between requirements stated in this attachment and provisions stated in the Waste Discharge Requirements (WDR), those contained in the WDR will prevail.

REVISED TENTATIVE

A. PRETREATMENT REQUIREMENTS

1. The Permittee shall be responsible and liable for the performance of all Control Authority pretreatment requirements contained in 40 CFR part 403, including any subsequent regulatory revisions to part 403. Where part 403 or subsequent revision places mandatory actions upon the Permittee as Control Authority but does not specify a timetable for completion of the actions, the Permittee shall complete the required actions within six months from the issuance date of this permit or the effective date of the part 403 revisions, whichever comes later. For violations of pretreatment requirements, the Permittee shall be subject to enforcement actions, penalties, fines and other remedies by the USEPA or other appropriate parties, as provided in the Act. USEPA may initiate enforcement action against a nondomestic user for noncompliance with applicable standards and requirements as provided in the act.

2. The Permittee shall enforce the requirements promulgated under sections 307(b), 307(c), 307(d) and 402(b) of the Act with timely, appropriate and effective enforcement actions. The Permittee shall cause all nondomestic users subject to federal categorical standards to achieve compliance no later than the date specified in those requirements or, in the case of a new nondomestic user, upon commencement of the discharge.

3. The Permittee shall perform the pretreatment functions as required in 40 CFR part 403 including, but not limited to:

   a. Implement the necessary legal authorities as provided in 40 CFR § 403.8(f)(1);

   b. Enforce the pretreatment requirements under 40 CFR parts 403.5 and 403.6;

   c. Implement the programmatic functions as provided in 40 CFR § 403.8(f)(2); and

   d. Provide the requisite funding and personnel to implement the pretreatment program as provided in 40 CFR § 403.8(f)(3).

4. The Permittee shall submit annually a report to USEPA Pacific Southwest Region, and the State describing its pretreatment activities over the previous year. In the event the District is not in compliance with any conditions or requirements of this permit, then the District shall also include the reasons for noncompliance and state how and when the District shall comply with such conditions and requirements. This annual report shall cover operations from January 1 through December 31 and is due on April 15 of each year. The report shall contain, but not be limited to, the following information:

   a. A summary of analytical results from representative, flow proportioned, 24-hour composite sampling of the publicly-owned treatment works (POTW) influent and

effluent for those pollutants USEPA has identified under section 307(a) of the Act which are known or suspected to be discharged by nondomestic users. This will consist of an annual full priority pollutant scan, with quarterly samples analyzed only for those pollutants detected in the full scan. The District is not required to sample and analyze for asbestos. Sludge sampling and analysis are covered in the sludge section of this permit. The District shall also provide any influent or effluent monitoring data for nonpriority pollutants which the District believes may be causing or contributing to interference or pass through. Sampling and analysis shall be performed with the techniques prescribed in 40 CFR part 136;

b. A discussion of Upset, Interference or Pass Through incidents, if any, at the treatment plant which the District knows or suspects were caused by nondomestic users of the POTW system. The discussion shall include the reasons why the incidents occurred, the corrective actions taken and, if known, the name and address of the nondomestic user(s) responsible. The discussion shall also include a review of the applicable pollutant limitations to determine whether any additional limitations, or changes to existing requirements, may be necessary to prevent pass through or interference;

c. An updated list of the District's significant industrial users (SIUs) including their names and addresses, and a list of deletions, additions and SIU name changes keyed to the previously submitted list. The District shall provide a brief explanation for each change. The list shall identify the SIUs subject to federal categorical standards by specifying which set(s) of standards are applicable to each SIU. The list shall also indicate which SIUs are subject to local limitations;

d. The District shall characterize the compliance status of each SIU by providing a list or table which includes the following information:

i. Name of the SIU;
ii. Category, if subject to federal categorical standards;
iii. The type of wastewater treatment or control processes in place;
iv. The number of samples taken by the POTW during the year;
v. The number of samples taken by the SIU during the year;
vi. For an SIU subject to discharge requirements for total toxic organics, whether all required certifications were provided;
vii. A list of the standards violated during the year. Identify whether the violations were for categorical standards or local limits;
viii. Whether the facility is in significant noncompliance (SNC) as defined at 40 CFR § 403.8(f)(2)(viii) at any time during the year; and
ix. A summary of enforcement or other actions taken during the year to return the SIU to compliance. Describe the type of action, final compliance date, and the amount of fines and penalties collected, if any. Describe any proposed actions for bringing the SIU into compliance.

e. A brief description of any programs the POTW implements to reduce pollutants from nondomestic users that are not classified as SIUs;

f. A brief description of any significant changes in operating the pretreatment program which differ from the previous year including, but not limited to, changes concerning the program's administrative structure, local limits, monitoring program or monitoring frequencies, legal authority, enforcement policy, funding levels, or staffing levels;

REVISED TENTATIVE

g. A summary of the annual pretreatment budget, including the cost of pretreatment program functions and equipment purchases; and

h. A summary of activities to involve and inform the public of the program including a copy of the newspaper notice, if any, required under 40 CFR § 403.8(f)(2)(viii).

B. LOCAL LIMITS EVALUATION

1. In accordance with 40 CFR § 122.44(j)(2)(ii), the POTW shall provide a written technical evaluation of the need to revise local limits under 40 CFR § 403.5(c)(1) within 180 days of issuance or reissuance of the Joint Water Pollution Control Plant (JWPCP) NPDES permit.

C. SIGNATORY REQUIREMENTS AND REPORT SUBMITTAL

1. Signatory Requirements.

   The annual report must be signed by a principal executive officer, ranking elected official or other duly authorized employee if such employee is responsible for the overall operation of the POTW. Any person signing these reports must make the following certification [40 CFR § 403.6(a)(2)(ii)]:

   I certify under penalty of law that this document and all attachments were prepared under my direction or supervision in accordance with a system designed to assure that qualified personnel properly gather and evaluate the information submitted. Based on my inquiry of the person or persons who manage the system, or those persons directly responsible for gathering the information, the information submitted is, to the best of my knowledge and belief, true, accurate, and complete. I am aware that there are significant penalties for submitting false information, including the possibility of fine and imprisonment for knowing violations.

2. Report Submittal.

   The Annual Pretreatment Report shall be submitted electronically using the State Water Board's California Integrated Water Quality System (CIWQS) Program website (http://www.waterboards.ca.gov/ciwqs/index.html). The CIWQS website will provide additional information for SMR submittal in the event there will be a planned service interruption for electronic submittal.

   A copy of the Annual Report must be sent to USEPA electronically to the following address: R9Pretreatment@epa.gov.

REVISED TENTATIVE