California Regional Water Quality Control Board, Colorado River Basin
Prosecution Team Evidence
on the matter of
Administrative Civil Liability Complaint R7-2014-0041
Exhibit 16

CITY OF BRAWLEY

PUBLIC WORKS/CITY ENGINEER
180 SOUTH WESTERN AVENUE
BRAWLEY, CALIFORNIA
92227
PHONE: 344-5800

January 30, 2007

Mr. Kirk Larkin
California Regional Water Quality Control Board
Colorado River Basin Region
73-720 Fred Waring Drive, Suite 100 Palm Desert, California 92260

Dear Kirk:

In compliance with Board Order # R7-2005-0021, Clean-up and Abatement Order # R7-2005-0079, the City of Brawley is submitting the summary and verification completion for the Ammonia Removal Enhancement Project which was completed on July 7, 2006 and was fully operational on that same day. The City failed to submit this verification by 1-31-2006 to the Regional Board as part of Milestone #1.C since the Project had not been completed yet. The City is also submitting the Operation and Maintenance Manual for the Ammonia Removal Enhancement Project in accordance with Milestone 1.D which is due by 2-1-2007.

If you have any questions concerning this report please do not hesitate to call me at (760) 334-5803.

Sincerely

Ruben Mireles

City of Brawley
Director of Water and Waste Water Treatment Plants

File: 7A 13 0100 011

RECEIVED
JAN 31 2007
REGION 7

City of Brawley Wastewater Treatment Plant

Ammonia Enhancement Removal Project

Description/ Summary

The project introduces substantial recycling into the treatment process and continues to utilize lagoons as the main treatment component. Recycling will take place after Ponds 3 and 5. This will allow larger quantities of the nitrifying and denitrifying bacteria to be present at the beginning of the treatment process. The mean cell retention time for the nitrifying and denitrifying bacteria, and thus the reduction of ammonia, will be significantly increased.

As the wastewater flows through the ponds, it will pass through anoxic and aerobic lagoons twice. In the first two ponds, the dissolved oxygen level will be maintained below 1.0 mg/L. Aeration will still occur, but the dissolved oxygen will not be high due to the high BOD of the influent. The low DO levels, combined with nitrate within the recycled wastewater and using the raw wastewater influent as a carbon energy source, will provide conditions for denitrification.

The DO in Pond 3 will be high, above 2.0 mg/L permitting nitrification to take place. The recycled wastewater, with the resulting higher mean cell retention time, will provide significantly more nitrification. Additionally, the aeration will accelerate the release of nitrogen gas, the product of denitrification, which will enhance the sedimentation of solids in the clarifiers.

Pond 4 will be an unaerated anoxic pond. This will lower the dissolved oxygen levels and permit denitrification to take place. In the final pond, the aeration will accelerate the release of nitrogen gas from the wastewater and provide the dissolved oxygen levels necessary for nitrification to take place. From this pond, the wastewater will either be recycled or discharged through the existing UV disinfection facility.

The project introduces substantial recycling into the treatment process and continues to utilize lagoons as the main treatment component. Recycling will take place after Ponds 3 and 5. This will allow larger quantities of the nitrifying and denitrifying bacteria to be present at the beginning of the treatment process. The mean cell retention time for the nitrifying and denitrifying bacteria, and thus the reduction of ammonia, will be significantly increased.

As the wastewater flows through the ponds, it will pass through anoxic and aerobic lagoons twice. In the first two ponds, the dissolved oxygen level will be maintained below 1.0 mg/L. Aeration will still occur, but the dissolved oxygen will not be high due to the high BOD of the influent. The low DO levels, combined with nitrate within the recycled wastewater and using the raw wastewater influent as a carbon energy source, will provide conditions for denitrification.

The DO in Pond 3 will be high, above 2.0 mg/L permitting nitrification to take place. The recycled wastewater, with the resulting higher mean cell retention time, will provide significantly more nitrification. Additionally, the aeration will accelerate the release of nitrogen gas, the product of denitrification, which will enhance the sedimentation of solids in the clarifiers.

Pond 4 will be an unaerated anoxic pond. This will lower the dissolved oxygen levels and permit denitrification to take place. In the final pond, the aeration will accelerate the release of nitrogen gas from the wastewater and provide the dissolved oxygen levels necessary for nitrification to take place. From this pond, the wastewater will either be recycled or discharged through the existing UV disinfection facility.

FLOW CHARACTERISTICS			INFLUENT CHARACTERISTICS			CONDITION	TEMPERATURE	EFFLUENT QUALITY	
AVERAGE DAILY FLOW:	3.500	MGD	CBODs:	145	mg/L	☒ ADF	☒ 10 DEG C	SOL CBODs:	4.9 mg/L
MMF PEAKING FACTOR:	1.30		TSS:	200	mg/L	☐ MMF	☒ 20 DEG C	REFRACT ORG N:	1.0 mg/L
MDF PEAKING FACTOR:	1.50		TKN:	65	mg/L	☐ MDF	☐ 30 DEG C	AMMONIA AS N:	0.3 mg/L
PHF FACTOR:	3.00		REFRACT ORG N:	1.0	mg/L			NITRATE AS N:	20.0 mg/L
			TP:	8	mg/L			TN:	21.4 mg/L
								TP:	7.0 mg/L

PRINT OPTIONS

SHEET OPTIONS

MECHANICAL AERATION			OXYGEN REQUIREMENTS		OPERATING DO		
ALPHA:	0.86		O2 REQ FOR CBODs REM:	5,726 PPD	@ ADF:	2.00	mg/L
BETA:	0.96		O2 REQ FOR NIT:	8,547 PPD	@ MMF:	2.00	mg/L
UNIT SOR:	3.00	LBS/HP-HR	DENIT CREDIT:	3,643 PPD	@ MDF:	1.00	mg/L
EFF SAT D:	0.75	FT	NET O2 REQ:	10,629 PPD			
HP REQ:	227.9	HP	MECH AER ☒	☐ DIFF AER	O2 OPTIONS		

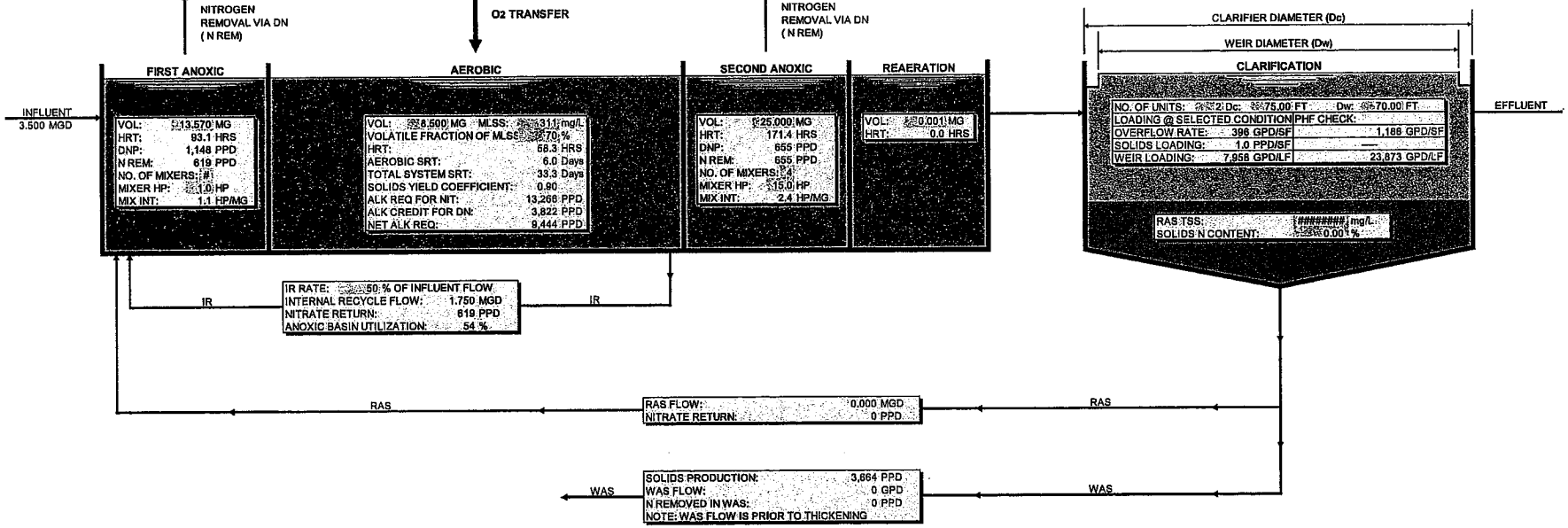

ABBREVIATIONS

ADF	AVERAGE DAILY FLOW	ALK	ALKALINITY AS CALCIUM CARBONATE
MMF	MAXIMUM MONTHLY FLOW	MLSS	MIXED LIQUOR SUSPENDED SOLIDS
MDF	MAXIMUM DAILY FLOW	N	NITROGEN
PHF	PEAK HOURLY FLOW	NIT	NITRIFICATION
MGD	MILLION GALLONS PER DAY	DN	DENITRIFICATION
GPD	GALLONS PER DAY	DNP	DENITRIFICATION POTENTIAL
PPD	POUNDS PER DAY	HRT	HYDRAULIC RETENTION TIME
DEG C	DEGREES CENTIGRADE	SRT	SOLIDS RETENTION TIME
CBODs	5-DAY CARBONACEOUS BIOCHEMICAL OXYGEN DEMAND	HRS	HOURS
TSS	TOTAL SUSPENDED SOLIDS	RAS	RETURN ACTIVATED SLUDGE
TKN	TOTAL KJELDAHL NITROGEN, AS N	WAS	WASTE ACTIVATED SLUDGE
REFRACT ORG N	REFRACTORY ORGANIC NITROGEN, AS N	IR	INTERNAL RECYCLE
TP	TOTAL PHOSPHORUS	NO.	NUMBER
COD	CHEMICAL OXYGEN DEMAND	MIX INT	MIXING INTENSITY
mg/L	MILLIGRAMS PER LITER	ATM P	ATMOSPHERIC PRESSURE
SOL	SOLUBLE	RH	RELATIVE HUMIDITY
VOL	VOLUME	DIFF AER	DIFFUSED AERATION
MG	MILLION GALLONS	MECH AER	MECHANICAL AERATION
REQ	REQUIRED	SOR	STANDARD OXYGENATION RATE
LF	LINEAL FOOT	SOTE	STANDARD OXYGEN TRANSFER EFFICIENCY
SF	SQUARE FOOT	EFF SAT D	EFFECTIVE SATURATION DEPTH
O2	OXYGEN	HP	HORSEPOWER
DO	DISSOLVED OXYGEN	SCFM	STANDARD CUBIC FEET PER MINUTE

CITY OF BRAWLEY WWTP

PROCESS ANALYSIS AND EXPECTED PERFORMANCE FOR PROJECTED FLOWS AND LOADINGS

ECB009000	DATE: APRIL 15, 2005	PREPARED BY: DD

COPYRIGHT © 2002 ECOS GROUP, LLC. ALL RIGHTS RESERVED

RECEIVED
JAN 3 1 2007
REGION 7

CITY OF BRAWLEY WWTP
PROCESS ANALYSIS AND EXPECTED PERFORMANCE
FOR PROJECTED FLOWS AND LOADINGS

Copyright © 2002 ECES Group, LLC, All Rights Reserved

Parameter	Unit	Wastewater Temp. = 10 Deg. C				Wastewater Temp. = 20 Deg. C				Wastewater Temp. = 30 Deg. C			
		ADF	MMF	MDF	PHF	ADF	MMF	MDF	PHF	ADF	MMF	MDF	PHF
Flows & Influent Characteristics													
Flow	MGD	3.500	4.550	5.250	10.500	3.500	4.550	5.250	10.500	3.500	4.550	5.250	10.500
Influent CBODs Concentration	mg/L	145	145	145	---	145	145	145	---	145	145	145	---
Influent TSS Concentration	mg/L	200	200	200	---	200	200	200	---	200	200	200	---
Influent TKN Concentration	mg/L	65	65	65	---	65	65	65	---	65	65	65	---
Influent TP Concentration	mg/L	8	8	8	---	8	8	8	---	8	8	8	---
Process Input Parameters													
First Anoxic Volume	MG	13.570	13.570	13.570	---	13.570	13.570	13.570	---	13.570	13.570	13.570	---
Aerobic Volume	MG	8.500	8.500	8.500	---	8.500	8.500	8.500	---	8.500	8.500	8.500	---
Second Anoxic Volume	MG	25.000	25.000	25.000	---	25.000	25.000	25.000	---	25.000	25.000	25.000	---
Reaeration Volume	MG	0.001	0.001	0.001	---	0.001	0.001	0.001	---	0.001	0.001	0.001	---
MLSS	mg/L	311	311	311	---	311	311	311	---	311	311	311	---
Volatile Fraction Of MLSS	Percent	70	70	70	---	70	70	70	---	70	70	70	---
RAS TSS Concentration	mg/L	###########	###########	###########	---	###########	###########	###########	---	###########	###########	###########	---
Internal Recycle Flow As Percent Of Influent Flow	Percent	50	50	50	---	50	50	50	---	50	50	50	---
Internal Recycle Flow	MGD	1.750	2.275	2.625	---	1.750	2.275	2.625	---	1.750	2.275	2.625	---
Refractory Organic Nitrogen Concentration	mg/L	1.0	1.0	1.0	---	1.0	1.0	1.0	---	1.0	1.0	1.0	---
Nitrogen Content Of WAS Solids	Percent	0.00	0.00	0.00	---	0.00	0.00	0.00	---	0.00	0.00	0.00	---
HRT, SRT,Yield, Effluent CBODs, & Effluent Ammonia													
RAS Flow Rate	MGD	0.000	0.000	0.000	---	0.000	0.000	0.000	---	0.000	0.000	0.000	---
First Anoxic HRT	Hours	93.1	71.6	62.0	---	93.1	71.6	62.0	---	93.1	71.6	62.0	---
Aerobic HRT	Hours	58.3	44.8	38.9	---	58.3	44.8	38.9	---	58.3	44.8	38.9	---
Second Anoxic HRT	Hours	171.4	131.9	114.3	---	171.4	131.9	114.3	---	171.4	131.9	114.3	---
Reaeration HRT	Hours	0.0	0.0	0.0	---	0.0	0.0	0.0	---	0.0	0.0	0.0	---
Total HRT	Hours	322.8	248.3	215.2	---	322.8	248.3	215.2	---	322.8	248.3	215.2	---
Aerobic SRT	Days	5.3	4.0	3.4	---	6.0	4.5	3.8	---	6.6	4.9	4.2	---
Total System SRT	Days	29.5	22.1	18.9	---	33.3	24.8	21.2	---	36.4	27.2	23.3	---
Yield Coefficient	Lb./Lb.	1.01	1.06	1.08	---	0.90	0.93	0.95	---	0.82	0.85	0.87	---
Solids Production	PPD	4,132	5,537	6,459	---	3,664	4,919	5,747	---	3,351	4,489	5,241	---
WAS Flow	GPD	0	0	0	---	0	0	0	---	0	0	0	---
Effluent Soluble CBODs Concentration	mg/L	5.2	6.8	7.9	---	4.9	6.3	7.2	---	4.8	6.0	6.8	---
Effluent Ammonia Concentration	mg/L	0.7	2.1	16.6	---	0.3	0.6	0.8	---	0.3	0.5	0.7	---
Nitrification Analysis													
Influent TKN	PPD	1,897	2,467	2,846	---	1,897	2,467	2,846	---	1,897	2,467	2,846	---
Less Nitrogen Required For Cell Synthesis	PPD	0	0	0	---	0	0	0	---	0	0	0	---
Less Effluent Ammonia	PPD	19	78	729	---	10	21	33	---	10	19	29	---
Less Refractory Organic Nitrogen	PPD	29	38	44	---	29	38	44	---	29	38	44	---
TKN To Be Nitrified	PPD	1,849	2,351	2,073	---	1,858	2,407	2,769	---	1,858	2,409	2,774	---
Denitrification Potentials													
First Anoxic Stage Denitrification Potential	PPD	641	662	676	---	1,148	1,186	1,211	---	2,055	2,124	2,169	---
Second Anoxic Stage Denitrification Potential	PPD	530	652	727	---	655	806	900	---	826	1,015	1,133	---
Total Denitrification Potential	PPD	1,171	1,314	1,403	---	1,802	1,992	2,111	---	2,881	3,139	3,302	---
Nitrate Removals @ Specified IR Flow													
First Anoxic Stage Nitrate Removal	PPD	616	662	676	---	619	802	923	---	619	803	925	---
Second Anoxic Stage Nitrate Removal	PPD	530	652	727	---	655	806	900	---	826	1,015	1,133	---
Total Nitrate Removal	PPD	1,146	1,314	1,403	---	1,274	1,608	1,822	---	1,445	1,818	2,057	---
Final Nitrogen Balance													
Influent TKN	PPD	1,897	2,467	2,846	---	1,897	2,467	2,846	---	1,897	2,467	2,846	---
Less Nitrogen Required For Cell Synthesis	PPD	0	0	0	---	0	0	0	---	0	0	0	---
Less Effluent Ammonia	PPD	19	78	729	---	10	21	33	---	10	19	29	---
Less Refractory Organic Nitrogen	PPD	29	38	44	---	29	38	44	---	29	38	44	---
TKN Converted To Nitrate	PPD	1,849	2,351	2,073	---	1,858	2,407	2,769	---	1,858	2,409	2,774	---
Less Nitrate Removed	PPD	1,146	1,314	1,403	---	1,274	1,608	1,822	---	1,445	1,818	2,057	---
Effluent Nitrate	PPD	702	1,036	670	---	584	799	946	---	413	591	716	---
Effluent TN (Ammonia + Ref Org N + Nitrate)	PPD	751	1,152	1,443	---	623	858	1,024	---	452	648	789	---
Effluent Ammonia Concentration	mg/L	0.7	2.1	16.6	---	0.3	0.6	0.8	---	0.3	0.5	0.7	---

CITY OF BRAWLEY WWTP
PROCESS ANALYSIS AND EXPECTED PERFORMANCE
FOR PROJECTED FLOWS AND LOADINGS

Copyright © 2002 ECES Group, LLC, All Rights Reserved

		Wastewater Temp. = 10 Deg. C				Wastewater Temp. = 20 Deg. C				Wastewater Temp. = 30 Deg. C			
Parameter	**Unit**	**ADF**	**MMF**	**MDF**	**PHF**	**ADF**	**MMF**	**MDF**	**PHF**	**ADF**	**MMF**	**MDF**	**PHF**
Refractory Organic Nitrogen Concentration	mg/L	1.0	1.0	1.0	---	1.0	1.0	1.0	---	1.0	1.0	1.0	---
Effluent TKN Concentration	mg/L	1.7	3.1	17.6	---	1.3	1.6	1.8	---	1.3	1.5	1.7	---
Effluent Nitrate Concentration	mg/L	24.1	27.3	15.3	---	20.0	21.1	21.6	---	14.1	15.6	16.4	---
Effluent TN Concentration (Ammonia + Ref Org N + Nitrate)	mg/L	25.7	30.4	33.0	---	21.4	22.6	23.4	---	15.5	17.1	18.0	---
Phosphorus Removal Analysis													
Influent TP Concentration	mg/L	8.0	8.0	8.0	---	8.0	8.0	8.0	---	8.0	8.0	8.0	---
Excess Phosphorus Removal Propensity Factor	---	0.00	0.00	0.00	---	0.00	0.00	0.00	---	0.00	0.00	0.00	---
Phosphorus Removal Potential	mg/L	1.3	1.5	1.6	---	1.0	1.2	1.3	---	0.9	1.0	1.1	---
Phosphorus Removal	mg/L	1.3	1.5	1.6	---	1.0	1.2	1.3	---	0.9	1.0	1.1	---
Effluent TP Concentration	mg/L	6.7	6.5	6.4	---	7.0	6.8	6.7	---	7.1	7.0	6.9	---
Anoxic Basin Mixing Analysis													
Number Of First Anoxic Mixers	Each	15	15	15	---	15	15	15	---	15	15	15	---
First Anoxic Mixer Horsepower, Each	HP	1.0	1.0	1.0	---	1.0	1.0	1.0	---	1.0	1.0	1.0	---
First Anoxic Basin Mixing Intensity	HP/MG	1.1	1.1	1.1	---	1.1	1.1	1.1	---	1.1	1.1	1.1	---
Number Of Second Anoxic Mixers	Each	4	4	4	---	4	4	4	---	4	4	4	---
Second Anoxic Mixer Horsepower, Each	HP	15.0	15.0	15.0	---	15.0	15.0	15.0	---	15.0	15.0	15.0	---
Second Anoxic Basin Mixing Intensity	HP/MG	2.4	2.4	2.4	---	2.4	2.4	2.4	---	2.4	2.4	2.4	---
Alkalinity Balance													
Alkalinity Coefficient For Nitrification	Lb./Lb.	7.14	7.14	7.14	---	7.14	7.14	7.14	---	7.14	7.14	7.14	---
Alkalinity Coefficient For Denitrification	Lb./Lb.	3.00	3.00	3.00	---	3.00	3.00	3.00	---	3.00	3.00	3.00	---
Alkalinity Required For Nitrification	PPD	13,200	16,783	14,804	---	13,266	17,187	19,770	---	13,268	17,201	19,803	---
Alkalinity Credit For Denitrification	PPD	3,439	3,942	4,210	---	3,822	4,825	5,467	---	4,336	5,455	6,172	---
Net Alkalinity Required	PPD	9,760	12,841	10,595	---	9,444	12,362	14,302	---	8,932	11,746	13,631	---
Oxygen Requirements													
Influent CBOD5	PPD	4,233	5,502	6,349	---	4,233	5,502	6,349	---	4,233	5,502	6,349	---
Effluent CBOD5	PPD	153	260	348	---	143	237	314	---	140	227	298	---
CBOD5 Removed	PPD	4,080	5,243	6,001	---	4,090	5,265	6,034	---	4,092	5,275	6,051	---
Oxygen Coefficient For CBOD5 Removal	Lb./Lb.	1.40	1.40	1.40	---	1.40	1.40	1.40	---	1.40	1.40	1.40	---
Oxygen Required For CBOD5 Removal	PPD	5,712	7,340	8,401	---	5,726	7,371	8,448	---	5,729	7,385	8,472	---
Oxygen Coefficient For Nitrification	Lb./Lb.	4.60	4.60	4.60	---	4.60	4.60	4.60	---	4.60	4.60	4.60	---
TKN Converted To Nitrate	PPD	1,849	2,351	2,073	---	1,858	2,407	2,769	---	1,858	2,409	2,774	---
Oxygen Required For Nitrification	PPD	8,504	10,813	9,538	---	8,547	11,073	12,737	---	8,548	11,082	12,758	---
Oxygen Coefficient For Denitrification Credit	Lb./Lb.	2.86	2.86	2.86	---	2.86	2.86	2.86	---	2.86	2.86	2.86	---
Denitrification Credit	PPD	3,279	3,758	4,013	---	3,643	4,600	5,212	---	4,134	5,201	5,884	---
Net Oxygen Requirement	PPD	10,937	14,394	13,926	---	10,629	13,844	15,973	---	10,143	13,266	15,346	---
Clarifier Loadings													
Number Of Units	Each	2	2	2	2	2	2	2	2	2	2	2	2
Clarifier Diameter	Feet	75.00	75.00	75.00	75.00	75.00	75.00	75.00	75.00	75.00	75.00	75.00	75.00
Surface Area	SF	8,836	8,836	8,836	8,836	8,836	8,836	8,836	8,836	8,836	8,836	8,836	8,836
Weir Diameter	Feet	70.00	70.00	70.00	70.00	70.00	70.00	70.00	70.00	70.00	70.00	70.00	70.00
Weir Length	Feet	440	440	440	440	440	440	440	440	440	440	440	440
RAS Flow	MGD	0.000	0.000	0.000	---	0.000	0.000	0.000	---	0.000	0.000	0.000	---
Overflow Rate	GPD/SF	396	515	594	1,188	396	515	594	1,188	396	515	594	1,188
Weir Loading	GPD/LF	7,958	10,345	11,937	23,873	7,958	10,345	11,937	23,873	7,958	10,345	11,937	23,873
Solids Loading	PPD/SF	1.0	1.3	1.5	---	1.0	1.3	1.5	---	1.0	1.3	1.5	---
Mechanical Aeration System Analysis													
Actual Oxygenation Rate (AOR)	PPD	10,937	14,394	13,926	---	10,629	13,844	15,973	---	10,143	13,266	15,346	---
Aerobic SRT	Days	5.3	4.0	3.4	---	6.0	4.5	3.8	---	6.6	4.9	4.2	---
Alpha	---	0.86	0.85	0.84	---	0.86	0.85	0.84	---	0.87	0.86	0.85	---
Beta	---	0.96	0.96	0.96	---	0.96	0.96	0.96	---	0.96	0.96	0.96	---
DO Saturation In Clean Water @ 20 Deg. C & 100% RH	mg/L	9.09	9.09	9.09	---	9.09	9.09	9.09	---	9.09	9.09	9.09	---
DO Saturation In Clean Water @ Specified Temp. & 100% RH	mg/L	11.29	11.29	11.29	---	9.09	9.09	9.09	---	7.56	7.56	7.56	---
Tau	---	1.24	1.24	1.24	---	1.00	1.00	1.00	---	0.83	0.83	0.83	---
Standard Atmospheric Pressure	psi	14.70	14.70	14.70	---	14.70	14.70	14.70	---	14.70	14.70	14.70	---
Barometric Pressure	psi	14.75	14.75	14.75	---	14.75	14.75	14.75	---	14.75	14.75	14.75	---
Saturated Vapor Pressure of Water @ 20 Deg. C	psi	0.34	0.34	0.34	---	0.34	0.34	0.34	---	0.34	0.34	0.34	---

CITY OF BRAWLEY WWTP
PROCESS ANALYSIS AND EXPECTED PERFORMANCE
FOR PROJECTED FLOWS AND LOADINGS

Copyright © 2002 ECES Group, LLC, All Rights Reserved

Parameter	Unit	Wastewater Temp. = 10 Deg. C				Wastewater Temp. = 20 Deg. C				Wastewater Temp. = 30 Deg. C			
		ADF	MMF	MDF	PHF	ADF	MMF	MDF	PHF	ADF	MMF	MDF	PHF
Saturated Vapor Pressure of Water @ Specified Temperature	psi	0.18	0.18	0.18	---	0.34	0.34	0.34	---	0.62	0.62	0.62	---
Effective Saturation Depth	Feet	0.75	0.75	0.75	---	0.75	0.75	0.75	---	0.75	0.75	0.75	---
Omega	---	1.00	1.00	1.00	---	1.00	1.00	1.00	---	1.00	1.00	1.00	---
Corrected DO Saturation In Clean Water @ 20 Deg. C & 100% RH	mg/L	9.33	9.33	9.33	---	9.33	9.33	9.33	---	9.33	9.33	9.33	---
Operating DO	mg/L	2.00	2.00	1.00	---	2.00	2.00	1.00	---	2.00	2.00	1.00	---
OTRf/SOTR	---	0.66	0.65	0.72	---	0.65	0.64	0.72	---	0.65	0.63	0.74	---
Aerator Unit SOR	Lbs./HP-Hr.	3.00	3.00	3.00	---	3.00	3.00	3.00	---	3.00	3.00	3.00	---
Aerator Unit AOR	Lbs./HP-Hr.	1.99	1.96	2.15	---	1.94	1.91	2.16	---	1.94	1.90	2.23	---
Total Horsepower Required	HP	228.5	306.5	269.9	---	227.9	302.7	308.4	---	217.7	290.3	286.7	---

RECORDING REQUESTED BY

City of Brawley

AND WHEN RECORDED MAIL TO:

Janet P. Smith
City Clerk
400 Main Street
Brawley,California 92227

Recorded in Official Records,
Imperial County
Doc#: 2006 – 042640
9/05/2006 1:20 PM

This Space Reserved for
Recorder Only
Government Code 27361.6

DOCUMENT TITLE(S):

NOTICE OF COMPLETION
Wastewater Treatment Plant Recirculation
Pipeline (Readvertisement) 2005-04A

CORA CONSTRUCTORS
74855 Joni Drive #4
Palm Desert, CA 92260

Dolores Provencio
County Clerk / Recorder
County Administration Center
940 Main St., Suite 202
El Centro, CA. 92243-2839
(760) 482-4272

RC
P CITY OF BRAWLEY

Rcpt # 49048 09/05/06 01:20PM

Description	Fee
DOC# 002006042640	$0.00
NOTICE	
No Fee	$0.00
Total Amount Due	$0.00
Total Paid	

Thank You
PLEASE KEEP FOR REFERENCE

'IDE ADEQUATE SPACE FOR RECORDING
:DING FEE(S) APPLY)

RECEIVED
JAN 3 1 2007
REGION 7

CITY OF BRAWLEY

NOTICE OF COMPLETION

Notice Pursuant to Civil Code Section 3093

Notice is hereby give that:

1. The undersigned is owner or corporate officer of the owner of the interest in the property hereinafter described:

2. The full name of the owner is: CITY OF BRAWLEY

3. The full address of the owner is: 400 Main Street, Brawley, California 92227

4. The nature of the interest of owner is, in fee: Fee Simple

5. The full names and full addresses of all persons, if any, who hold title with the undersigned as joint tenants or as tenants-in-common are:

Names	Addresses
None	

6. A work of improvement on the property hereinafter described was completed on **July 7, 2006**

   The work done was: Specification No. 2005-04A: Wastewater Treatment Plant Recirculation Pipeline (Readvertisement) Installation of a Recirculation Pipeline System including installing a new aerator.

7. The name of the contractor if any, for such work of improvement was: **Cora Constructors**, 74855 Joni Drive #4, Palm Desert, CA 92260

   Date of Contract: **January 9, 2006**

8. The property on which said work of improvement was completed in the City of Brawley, County of Imperial, State of California, and is described as follows: Wastewater Treatment Plant, 5015 Best Road.

9. The street address of said property is: same as No. 8

Dated: August 31, 2006

CITY OF BRAWLEY, CALIFORNIA

Oscar G. Rodriquez, City Manager

VERIFICATION

I, the undersigned, say: I am the City Manager of the City of Brawley, California, the declarant of the foregoing notice of completion; I have read said notice of completion and know the contents thereof; the same is true of my own knowledge. I declare under penalty of perjury that the forgoing is true and correct.

Executed on 31st day of August, 2006, at Brawley, California

Personal signature of the Individual who is swearing
That the contents of this notice of completion are true.

RECEIVED
JAN 3 1 2007
REGION 7

OPERATION & MAINTENANCE MANUAL

Summary Sheet: Recirculation Pipeline Wastewater Lift Station

DIVISION 16 - INSTRUMENTATION & CONTROL SYSTEM

EQUIPMENT MANUFACTURER:

ITT Flygt Corporation
2630 North Marine Drive
Portland, OR 97217
Ph: 503-240-1980; Fax: 503-240-3445
Email: flygt_western@fluids.ittind.com; Website: www.flygtus.com

EQUIPMENT SUPPLIER:

Romtec Utilities, Inc
18240 North Bank Rd
Roseburg OR 97470
Phone: 541-496-3541 Fax: 541-496-0803
Email: info@romtec.com; Website: www.romtecutilities.com

RECEIVED
JAN 3 1 2007
REGION 7

OPERATION & MAINTENANCE MANUAL

Summary Sheet: Recirculation Pipeline Wastewater Lift Station

DIVISION 11 - SEWAGE PUMP STATION METER VAULT

PRE-ASSEMBLED VALVE VAULT SUPPLIER:

Romtec Utilities, Inc.
18240 North Bank Rd.
Roseburg, OR 97470
Phone: 541-496-3541; Fax: 541-496-0803
Email: info@romtec.com; Website: www.romtecutilities.com

PRE-CAST CONCRETE VAULT MANUFACTURER:

Utility Vault, div. of Oldcastle Precast
28455 SW Barber St.; PO Box 323
Wilsonville, OR 97070-0323
Ph: 503-682-2844; Fax: 503-682-2657
Email: john.hart@oldcastleprecast.com; Website: http://www.uvwilsonville.com/

VAULT HATCH MANUFACTURER:

ITT Flygt Corporation
2630 North Marine Drive
Portland, OR 97217
Ph: 503-240-1980; Fax: 503-240-3445
Email: flygt_western@fluids.ittind.com; Website: www.flygtus.com

PLUG VALVE MANUFACTURER:

Val-Matic Valves
905 Riverside Drive
Elmhurst, IL 60126
Ph: 630-941-7600 Fax: 630-971-8042
Email: valves@valmatic.com; Website: www.val-matic.com

DIVISION 16 - GENERAL ELECTRICAL & POWER SUPPLY

GENERAL CONTRACTOR:

Jeff Lowe
Cora Construction
74885 Joni Drive Suite 4
Palm Desert, CA 92260
Ph: 760-674-3201; Fax: 760-674-8648

RECEIVED
JAN 3 1 2007
REGION 7

OPERATION & MAINTENANCE MANUAL

Summary Sheet: Recirculation Pipeline Wastewater Lift Station

DIVISION 11 - SEWAGE PUMP STATION VALVE VAULT

PRE-ASSEMBLED VALVE VAULT SUPPLIER:

Romtec Utilities, Inc.
18240 North Bank Rd.
Roseburg, OR 97470
Phone: 541-496-3541; Fax: 541-496-0803
Email: info@romtec.com; Website: www.romtecutilities.com

PRE-CAST CONCRETE VAULT MANUFACTURER:

Utility Vault, div. of Oldcastle Precast
28455 SW Barber St.; PO Box 323
Wilsonville, OR 97070-0323
Ph: 503-682-2844; Fax: 503-682-2657
Email: john.hart@oldcastleprecast.com; Website: http://www.uvwilsonville.com/

VAULT HATCH MANUFACTURER:

ITT Flygt Corporation
2630 North Marine Drive
Portland, OR 97217
Ph: 503-240-1980; Fax: 503-240-3445
Email: flygt_western@fluids.ittind.com; Website: www.flygtus.com

PLUG VALVE MANUFACTURER:

Val-Matic Valves
905 Riverside Drive
Elmhurst, IL 60126
Ph: 630-941-7600 Fax: 630-971-8042
Email: valves@valmatic.com; Website: www.val-matic.com

CHECK VALVE MANUFACTURER:

Val-Matic Valves
905 Riverside Drive
Elmhurst, IL 60126
Ph: 630-941-7600 Fax: 630-971-8042
Email: valves@valmatic.com; Website: www.val-matic.com

PRESSURE SENSOR MANUFACTURER:

Red Valve Company
700 North Bell Ave
Carnegie, PA 15106
Ph: 412-279-0044; Fax: 412-279-7878
Email: valves@redvalve.com; Website: www.redvalve.com

RECEIVED
JAN 3 1 2007
REGION 7

OPERATION & MAINTENANCE MANUAL

Summary Sheet: Recirculation Pipeline Wastewater Lift Station

DIVISION 1 - GENERAL REQUIREMENTS
PROJECT ENGINEER:
David Dale
Nolte Beyond Engineering
15090 Avenue of Science, Suite 101
San Diego, CA 92128
Ph: 760-339-4112; Fax: 760-482-0300
Email:david.dale@nolte.com

GENERAL CONTRACTOR:
Jeff Lowe
Cora Construction
74885 Joni Drive Suite 4
Palm Desert, CA 92260
Ph: 760-674-3201; Fax: 760-674-8648

DIVISION 11 - SUBMERSIBLE NON-CLOG SEWAGE PUMP SYSTEM
PUMPS & PUMP ACCESSORIES SUPPLIER:
ITT Flygt Corporation
2630 North Marine Drive
Portland, OR 97217
Ph: 503-240-1980; Fax: 503-240-3445
Email: flygt_western@fluids.ittind.com; Website: www.flygtus.com

DIVISION 11 - PUMP STATION WET WELL SYSTEM
WET WELL SYSTEM SUPPLIER:
Romtec Utilities, Inc.
18240 North Bank Rd.
Roseburg, OR 97470
Phone: 541-496-3541; Fax: 541-496-0803
Email: info@romtec.com; Website: www.romtecutilities.com

WET WELL HATCH SUPPLIER:
ITT Flygt Corporation
2630 North Marine Drive
Portland, OR 97217
Ph: 503-240-1980; Fax: 503-240-3445
Email: flygt_western@fluids.ittind.com; Website: www.flygtus.com

FLYGT

FM
APPROVED

FLYGT SUBMERSIBLE PUMP

PARTS LIST NP 3153 LT

SERIAL NO 3153.091 0630120, 0630121

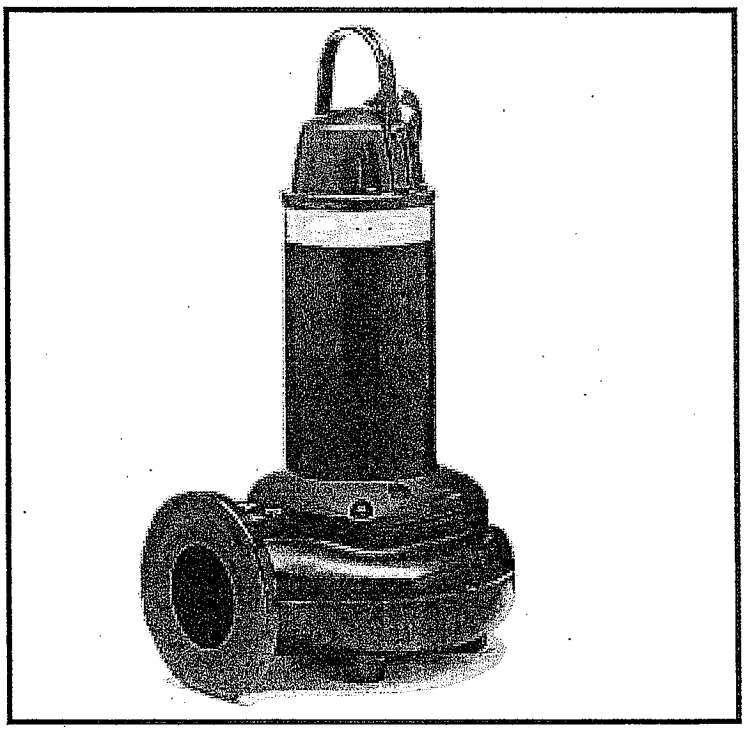

ITT FLYGT CORPORATION
2630 N. MARINE DRIVE

PORTLAND, OR 97217
USA
TELEPHONE NO: (503) 240-1980

DATAPLATE

FLYGT NP 3153 LT

DATE: 2006-06-19

SERIAL NO: 3153.091 0630120, 0630121

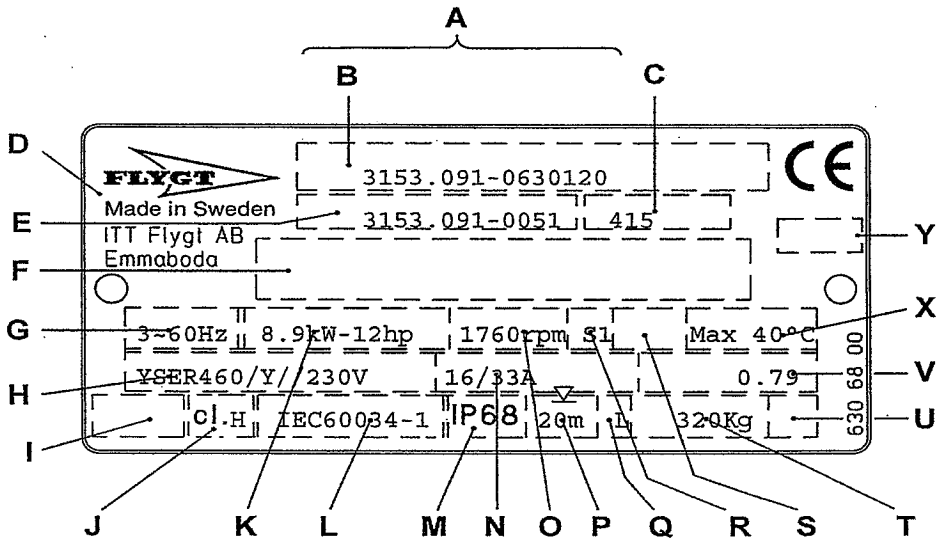

Dataplate Interpretation:

A	Serial number	M	Degree of protection
B	Product code + Number	N	Rated current
C	Curve code/Propeller code	O	Rated speed
D	Country of origin	P	Max. submergence
E	Product number	Q	Direction of rotation: L=left, R=right
F	Additional information	R	Duty class
G	Phase; Type of current; Frequency	S	Duty factor
H	Rated voltage	T	Product weight
I	Thermal protection	U	Locked rotor code letter
J	Thermal class	V	Power factor
K	Rated shaft power	X	Max. ambient temperature
L	International standard	Y	Notified body Only for EN-approved Ex-products

(1 kg = 2.2 pound, 1 lit = 0.26 US gallon, 1 lit = 0,22 UK gallon)

Recommended spare parts:
See Rec. column: I = Intermediate Service Kit; parts for inspection and maintenance.
B = Basic Repair Kit; parts for major overhaul.

For service:
Pos number 800; O-rings kit intended for Intermediate Service.
Pos number 900; contains of a shaft seal unit, bearings and O-rings.

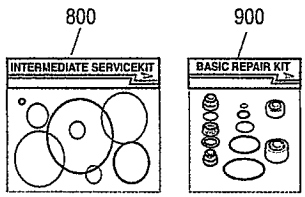

A complete set of tools can be ordered for repair and maintenance work; i. e. standard hand tools and special tools for seal change and hydraulic-end use.

Order:
This partlist can be used as an order form by marking out the number of parts in the Qty/Order column.
Please send or fax the form to your Flygt representative.

RECEIVED
JAN 3 1 2007
REGION 7

NBC_ACLC_PT-000352

PARTS LIST

FLYGT NP 3153 LT

SERIAL NO 3153.091 0630120, 0630121

Item no	Partno	Rec	Denomination	Qty/ord.
1	642 15 00		Lifting handle	1
2	83 04 56		Hex.socket hd screw M10X35-A4-80	2
7	83 45 59		Cable tie 200X2,4 PA 6/6 -55+105	1
8	630 68 00		Data plate USE 6306801 AS SPARE PART	2
8	630 70 00		Certificate plate FM APPROVED	2
9	83 93 50		Marking strip 5-GW(T1;T2;T15;T16)	1
9	83 93 51		Marking strip W2;V2;U2;W5;W1;V5;V1U5;U1	1
9	650 09 00		Connection plate	1
9	681 58 00		Plate	1
9	698 95 00		Connection plate	1
10	82 20 88		Drive screw 4X5	6
13	642 16 00		Earthing plate	1
23	94 21 08		Motor cable SUBC 8AWG/3-2-1-GC 27-29	16.6 m
24	642 17 01		Entrance flange	1
26	83 04 53		Hex.socket hd screw M12X45-A4-80	2
31	82 74 63		O-ring 49,5X3,0 NBR	1
32	642 14 01		Entrance cover	1
33	82 78 35		O-ring 175,0X3,0 NBR	1
35	83 04 56		Hex.socket hd screw M10X35-A4-80	4
45	82 00 11		Hex.socket hd screw M6X12	2
53	82 00 11		Hex.socket hd screw M6X12	2
53	82 00 11		Hex.socket hd screw M6X12	2
53	82 00 11		Hex.socket hd screw M6X12	2
54	642 08 00		Rail	1
56	642 16 00		Earthing plate	2
60	82 56 25		Spring washer 71,5X59,0X6,5	1
61	83 30 16		Ball bearing 3306A-2Z/C3WT	1
69	642 09 01		Stator housing	1
72	82 74 94		O-ring 209,3X5,7 NBR	1
73	641 98 04		Shaft unit	1
79	641 95 05		Stator 21-13-4a	1
82	608 12 01		Cooling jacket OUTER	1
83	82 78 49		O-ring 221,84X3,53 NBR	1
84	82 75 01		O-ring 279,3X5,7 NBR	1
101	650 51 00		Cable unit FLS10	1

Ordered by:

Company:.....Ref:.....Tel:.....Date:.....

RECEIVED
JAN 3 1 2007
REGION 7

NBC_ACLC_PT-000353

PARTS LIST

Item no	Partno	Rec	Denomination	Qty/ord.
103	663 04 00		Level sensor FLS10	1
105	642 10 01		Bearing holder	1
107	82 59 06		Retaining ring SGA 40	1
108	82 44 15		Supporting washer	1
109	83 30 18		Ball bearing 3308A-2Z/C3WT	1
110	83 07 62		Retaining ring JB 90	1
120	642 13 00		Inspection screw	1
122	82 76 85		O-ring 17,0X3,0 NBR	3
122	82 76 85		O-ring 17,0X3,0 NBR	1
129	642 12 00		Seal housing cover	1
130	82 78 39		O-ring 230,0X3,0 NBR	1
131	82 75 01		O-ring 279,3X5,7 NBR	1
133	83 04 56		Hex.socket hd screw M10X35-A4-80	6
141	641 50 00		Mechanical seal DIAM.35	1
145	83 04 53		Hex.socket hd screw M12X45-A4-80	4
158	696 50 57		Impeller	1
162	82 37 05		Plain washer	1
169	83 04 55		Hex.socket hd screw M12X110-A4 80	1
200	643 64 00		Pump housing	1
202	83 04 56		Hex.socket hd screw M10X35-A4-80	2
203	648 00 00		Cover	1
204	82 81 93		O-ring 44,2X5,7 FPM	1
209	651 07 00		Sliding bracket	1
210	83 04 53		Hex.socket hd screw M12X45-A4-80	4
229	667 40 01		Sticker	2
232	83 53 58		Terminal clamp WEIDMüLLER WDU6/10	3
233	83 53 61		Terminal clamp WDU16,1000 V	8
234	83 53 67		Cross connection WQV 16/2	4
235	83 53 54		End support WEW 35/2	2
236	83 53 50		Partition	1
239	443 69 00		El-lead through	1
239.1	81 98 44		Hex.socket hd screw	1
239.2	82 35 13		Plain washer	3
240	607 48 00		Spring	1
241	82 78 35		O-ring 175,0X3,0 NBR	1
242	608 22 01		adapter	1
243	83 04 57		Hex.socket hd screw M8X16-A4-80	2
245	82 75 01		O-ring 279,3X5,7 NBR	1
246	82 78 39		O-ring 230,0X3,0 NBR	1
247	82 95 69		O-ring 84,4X4,0 FPM	1
248	608 27 00		Strip	1

Ordered by:

Company:.....Ref:.....Tel:.....Date:.....

RECEIVED
JAN 2 1 2007
REGION 7

NBC_ACLC_PT-000354

PARTS LIST

Item no	Partno	Rec	Denomination	Qty/ord.
249	82 32 50		Clip	1
251	642 13 00		Inspection screw	2
252	82 76 85		O-ring 17,0X3,0 NBR	2
253	608 13 00		Cooling jacket INNER	1
254	608 14 00		Flow diffuser	1
255	82 00 11		Hex.socket hd screw M6X12	4
256	608 24 00		Square washer	4
258	643 65 01		Sleeve	1
259	643 66 00		Gland screw	1
264	82 40 82		Plain washer (20)-32 MM	4
265	84 18 04		Seal sleeve (26)-29 MM	2
266	597 98 02		Ring	1
270	608 31 00		Lock washer	1
313	82 71 72		O-ring 71,2X3,0 FPM	1
800	84 15 47		Is kit INTERMEDIATE SERVICE KIT	1
900	657 17 08		Basic repair kit	1

Ordered by:

Company:.....Ref:.....Tel:.....Date:.....

NBC_ACLC_PT-000355

EXPLODED VIEW

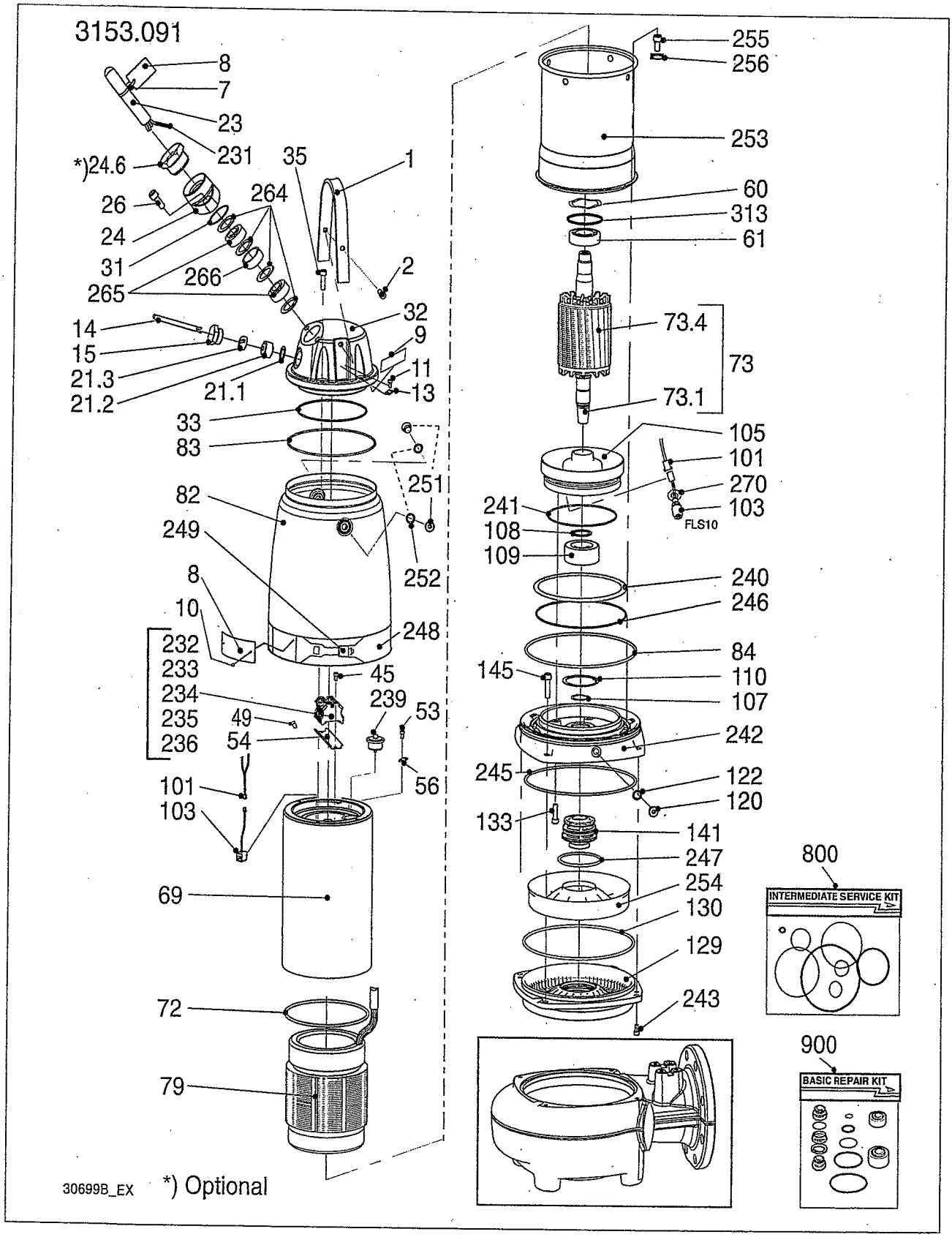

RECEIVED
JAN 3 1 2007
REGION 7
NBC_ACLC_PT-000356

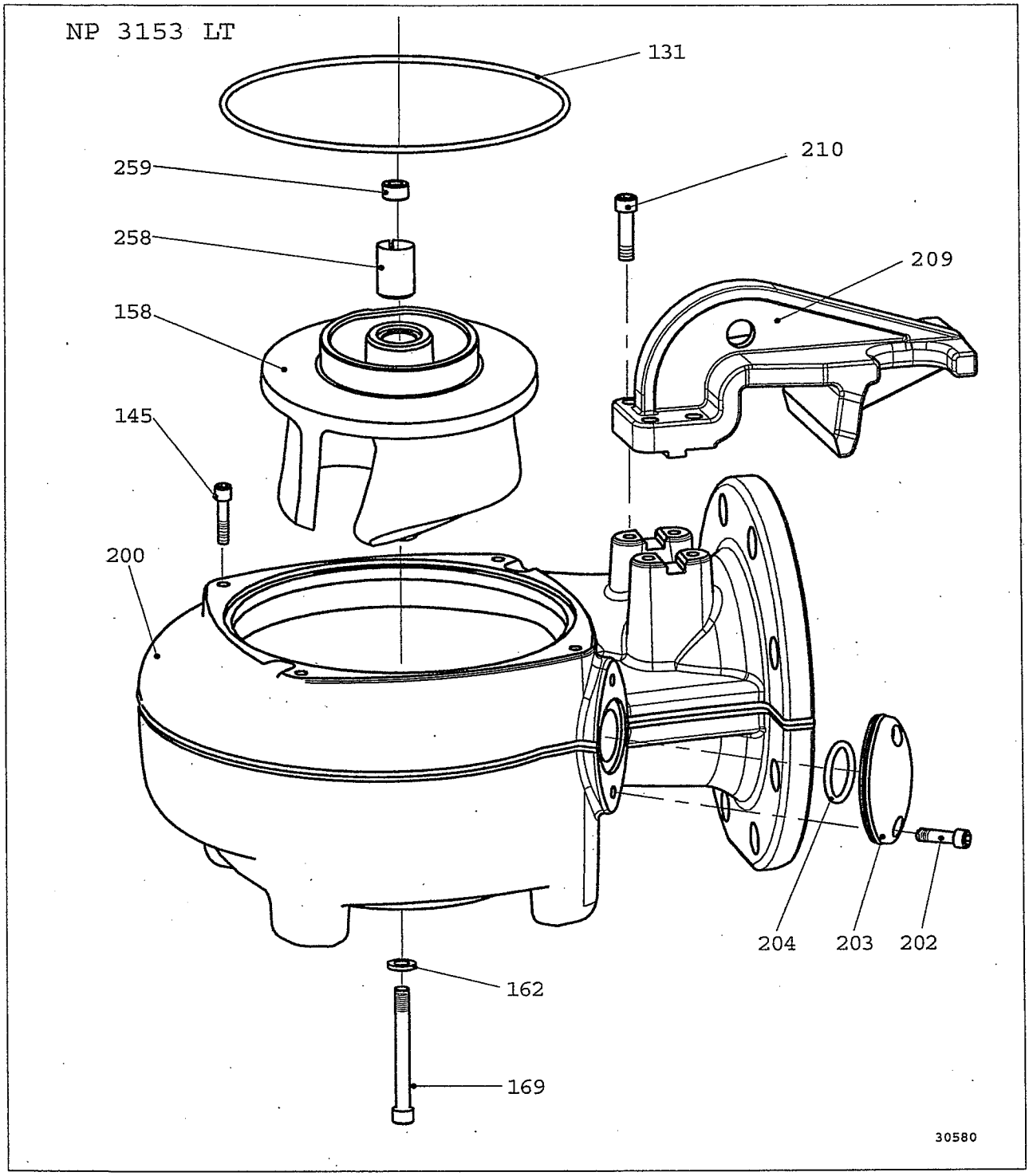

NBC_ACLC_PT-000357

OPERATION

Before starting

- Check that the visible parts of the pump and installation are undamaged and in good condition.
- Remove the fuses or open the circuit breaker and check that the impeller can be rotated freely.
- Verify that the supply voltage matches the pump data plate voltage rating.
- Conduct insulation integrity check.
- Conduct phase to phase resistance check.
- Check that the monitoring equipment works.
- Check the direction of rotation. The impeller shall rotate clockwise, as viewed from above. When started, the pump will jerk in the opposite direction to the direction in which the impeller rotates. See figure.
- In case of dry installation, check the direction of rotation through the inlet elbow access cover.
- Transpose two phase leads if the impeller rotates in the wrong direction (3-phase).

— **Before starting work on the pump, make sure that the pump and the control panel are isolated from the power supply and can not be energized. This applies to the control circuit as well.**

— **NOTE for Ex version page 3.**

— **Make sure that the pump cannot roll or fall over and injure people or damage property.**

— **In some installations the pump surface and the surrounding liquid may be hot. Bear in mind the risk of burn injuries.**

— **In some installations and at certain operating points on the performance curve, the noise level of 70 dB or the noise level specified for the actual pump may be exceeded.**

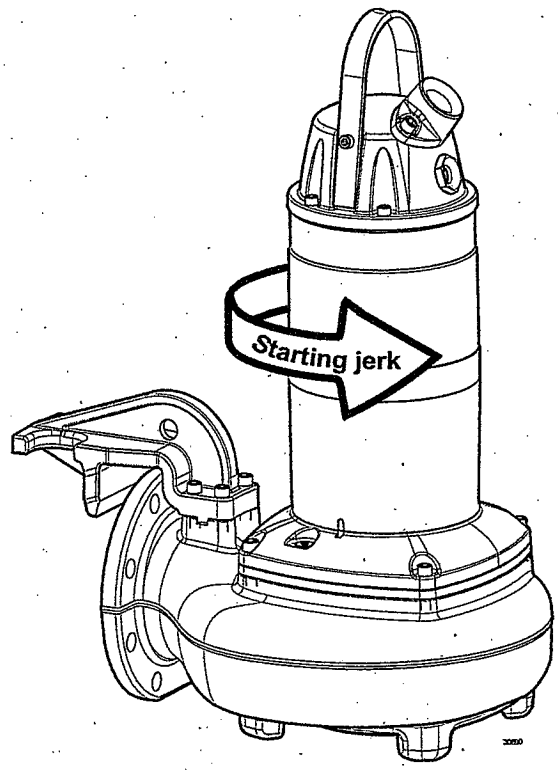

Watch the starting jerk which can be powerful.

NBC_ACLC_PT-000358

CARE AND MAINTENANCE

Service/Inspection

ITT Flygt recommends a preventive maintenance program based on Intermediate and Major Services at regular intervals. For standard sewage applications where FLS 10 is correctly connected and in use and the temperature of the pumped liquid is 40°C (104°F) or less an *Intermediate Service* should be performed every 8000 hours or every 2 years, whichever occurs first.

The time between *Major Service* could vary considerably depending on operating conditions and the need for a Major Service will be determined during the regular Intermediate Services.
However, a minimum of 20 000 hours of operation could be anticipated.

For applications other than sewage water or for specific operating conditions, other service intervals may be recommended.

Pump	Intermediate Service running 8 000 h or 2 years
Junction box	Check that it is clean and dry.
Terminal board	Check that the connections are properly tightened.
Insulation check	Check that the resistance between earth and phase lead is more than 5 MΩ Conduct phase to phase resistance check.
Cable	Check that the rubber sheating (jacket) is undamaged.
Seal housing	Fill up with new coolant if necessary. Check freezing point (lower than −13°C, 9°F).
Inspection chamber	Drain all liquid if any. Check the resistance. Normal value approx. 1200 Ω, alarm approx. 430 Ω
O-rings	Always replace the O-rings of the filling plugs and at the junction cover. Always grease new O-rings.
Thermal contacts	Check the resistance. Normally closed circuit; interval 0 – 1 Ω
Thermistor	Check the resistance 20 – 250 Ω, (measuring voltage max 2 V DC).
Impeller	Check impeller clearance and adjust if necessary.
Lifting handle	Check the screws and the status of the lifting handle.
Rotation direction	Check the rotation of the impeller.
Lifting device	Check that local safety regulations are followed.
Voltage and amperage	Check running values.
Pump station	**Intermediate Service running 8 000 h or 2 years**
Electrical cabinets/ panels	Check that they are clean and dry.
Connection to power	Check that the connections are properly tightened.
Overload and other protections	Check correct settings.
Personnel safety	Check guard rails, covers and other protections.
Level regulators	Check condition and function.
Pump	**Major Service**
Support and main bearing.	Replace with new bearings.
Mechanical seal unit.	Replace with new seal units.
Pumpstations same as Intermediate Service	

RECEIVED
JAN 3 1 2007
REGION 7

NBC_ACLC_PT-000359

If any indication of alarm between inspections, please see instructions below.	Actions
FLS10	Drain the fluid in the inspection chamber. Fill with new coolant if necessary. Check freezing point (lower than –13°C, 9°F). Check the inspection chamber again after one week of operation. If leakage has occured, drain the fluid and change the mechanical seal unit and replace with new coolant.
Thermistor/Thermal-contact	Check coolant level. (pump with cooling jacket) Check start and stop levels.
Overload protection	Check that the impeller can rotate freely.

NOTE for Ex version page 3.

The following points are important in connection with work on the pump:

— Make sure that the pump cannot roll or fall over and injure people or damage property.

— Check every year that the lifting equipment is in good condition.

The pump is designed for use in liquids which can be a health risk. In order to prevent injury to the eyes and skin, observe the following points when working on the pump:

— Make sure that the pump has been thoroughly cleaned.

— Beware of the risk of infection.

— Follow local safety regulations.

— Always wear goggles and rubber gloves.

— Rinse the pump thoroughly with clean water before starting work.

— Rinse the components in water after dismantling.

— The coolant chamber may be under pressure. Hold a rag over the filling plug to prevent splatter.

Proceed as follows if fluids have splashed into your eyes:

— Rinse your eyes immediately in running water for 15 minutes. Hold your eyelids apart with your fingers.

— Contact an eye specialist.

On your skin:

— Remove contaminated clothes.

— Wash your skin with soap and water.

— Seek medical attention, if required.

NBC_ACLC_PT-000360

Changing the coolant

Emptying coolant
(without cooling jacket)

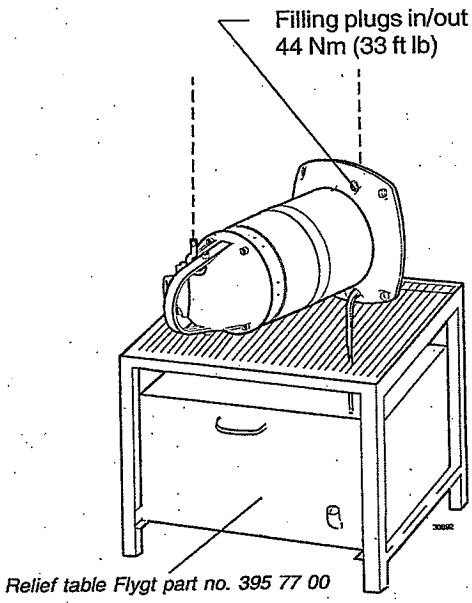

Filling coolant

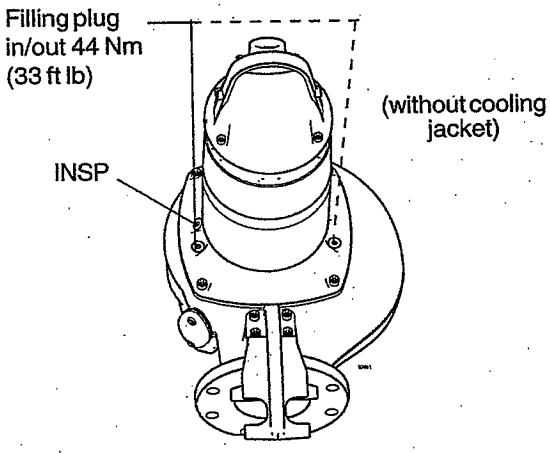

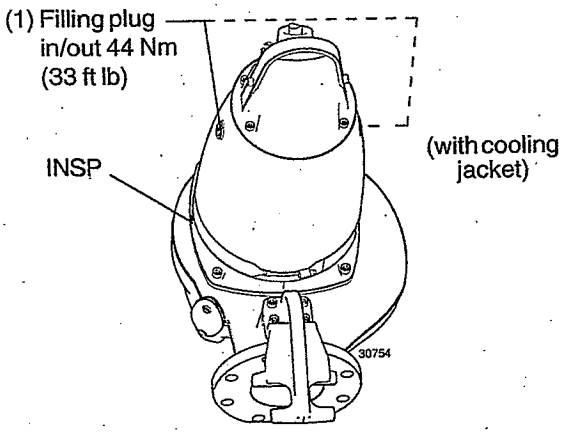

Emptying coolant
(with cooling jacket)

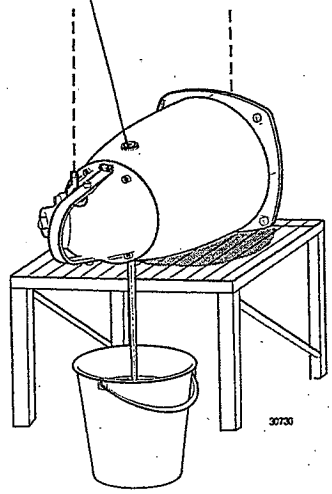

1. Lift the pump horizontally with an overhead crane and place on relief table.
2. Turn the pump so that one of the filling plugs holes faces downwards.
   WARNING! If the mechanical seal unit leaks, the seal housing may be under pressure. Hold a rag over the filling plug to prevent splatter.
3. Unscrew the filling plug. It is easier to drain the water-glycol if the other filling plug is also removed.
4. Pump **without** cooling jacket. Raise the pump to an upright position. Fill with coolant to the same level as the filling plugs; approx. 2,2 litres (2.3 US quarts).
   Pump **with** cooling jacket; approx. 10,5 litres (11.2 US quarts)
   Coolant: a mix of water and stabilized monopropyleneglycol in a mixture ratio of 70/30 % volume part.

   Known trade marks of monopropyleneglycol are: Dowcal N (individual components are approved by FDA), Dowcal 20. These are non-poisonous, heat-and-cold resistant and inhibiting of corrosion.

   Use of other type of glycol jeopardize the function of the pump.

   If there is no risk of freeezing even clean water with anti-corrosive is acceptable as coolant.
5. Always replace the O-rings of the filling plugs. Put the plugs back and tighten them.

RECEIVED
JAN 3 1 2007
REGION 7

NBC_ACLC_PT-000361

Removing the impeller

1.

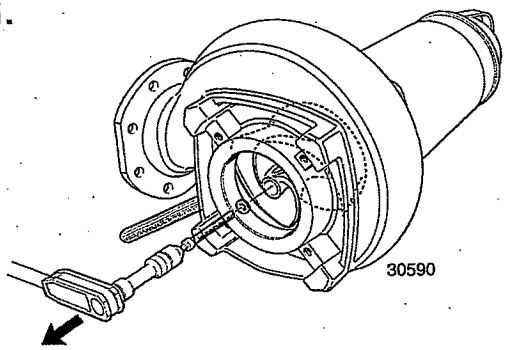

Place the pump horizontally. Remove the flush valve cover and it's O-ring. Insert a rod (wood or plastic) through the hole and lock the impeller in place. Remove the impeller screw.

2.

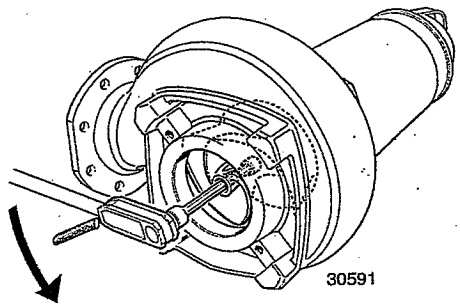

Using a 12 mm hexagon bit adaptor (allen socket) with a 100 mm (4") extension (minimum length) turn the gland screw counter clockwise until the impeller breaks free from the shaft.

3.

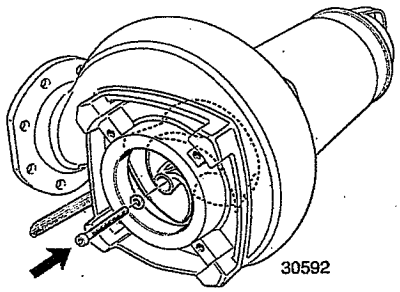

Install the impeller screw. Tighten lightly by hand, just to prevent the impeller from falling off.

4.

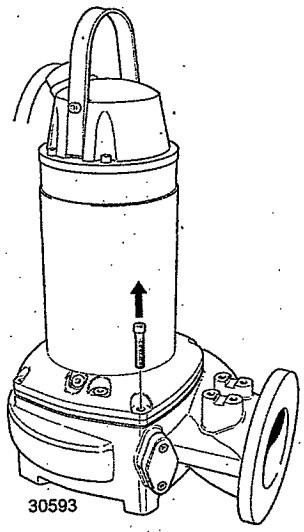

Remove the rod and raise the pump. Remove the pump housing screws. Using a crane, lift the drive unit off the pump housing.

5.

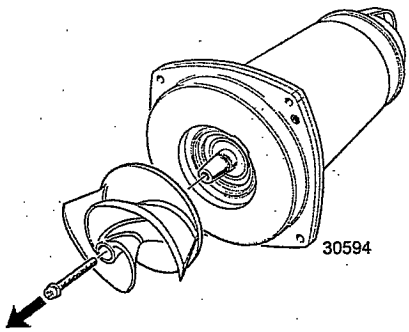

Worn impellers can have very sharp edges. Use protective gloves!

WARNING! When laying the pump on its side do not allow the weight of the pump to rest on any portion of the impeller. The impeller must not be allowed to make contact with the concrete floor or other hard and rough surfaces.

Place the drive unit horizontally. Remove the impeller screw.

RECEIVED
JAN 3 1 2007
REGION 7

NBC_ACLC_PT-000362

Installing and setting clearance

1.

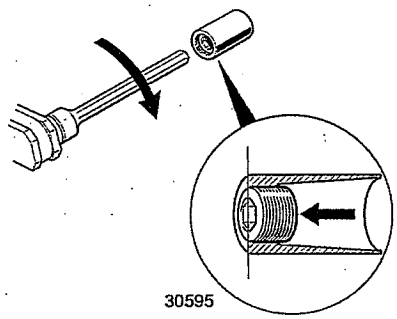

Make sure that the end of the shaft is clean and free from burrs. Polish off any flaws with fine emery cloth. Grease end of shaft, conical sleeve and the threads of the gland screw and the impeller screw. Align the edge of the gland screw with the edge of the conical sleeve so that they are flush.

2.

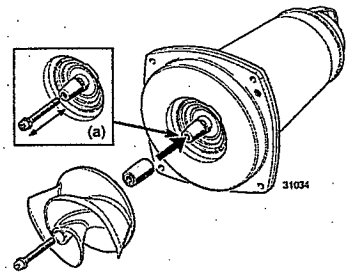

Before assembling, check that the impeller screw is clean and easy to screw into the shaft end (a). This to prevent the shaft to rotate with the impeller screw. Assemble the conical sleeve and the impeller onto the shaft. Fit the impeller screw onto the shaft. Tighten the impeller screw lightly by hand, just to prevent the impeller from falling off.

3.

Fit the drive unit to the pump housing. Adjust its position so that the inspection hole is on the same side as the hole for the flush valve. Tighten the screws in diagonally opposite pairs.

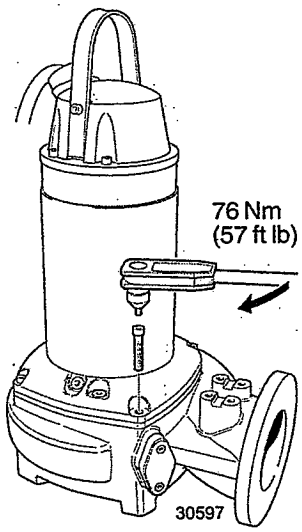

4.

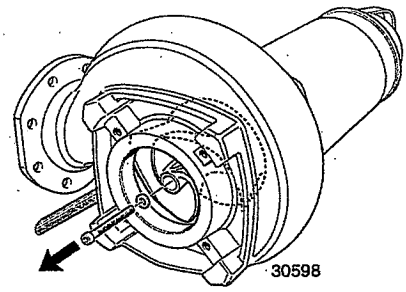

Place the pump horizontally.
Remove the flush valve cover and it's O-ring. Insert a rod (wood or plastic) through the hole and lock the impeller in place. Remove the impeller screw.

5.

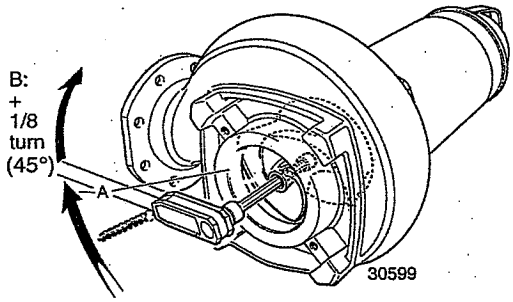

Turn the gland screw clockwise until the impeller makes contact with the pump housing. Tighten it a further 1/8 turn, 45°. This will insure the correct clearance between the impeller and the bottom of the pump housing in the next step.

6.

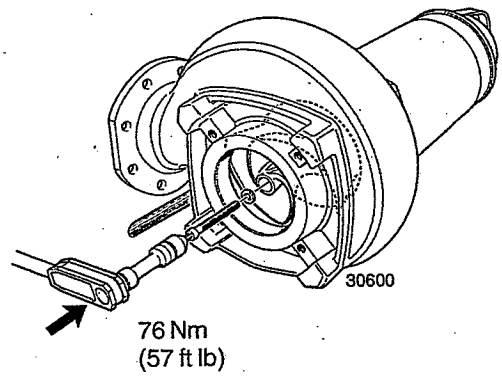

Fit the washer and the greased impeller screw and tighten, torque to 76 Nm (57 ft lb). Remove the rod used to lock the impeller. Fit the O-ring, flush valve cover and secure with screws, torque to 44 Nm (33 ft lb).

RECEIVED
JAN 3 1 2007
REGION 7

NBC_ACLC_PT-000363

Removing the impeller - dry installation version, NT

1.

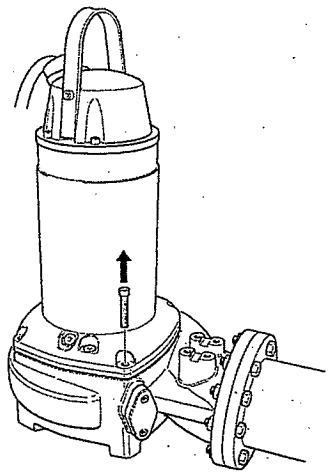

Remove the drive unit from the pump housing.

2.

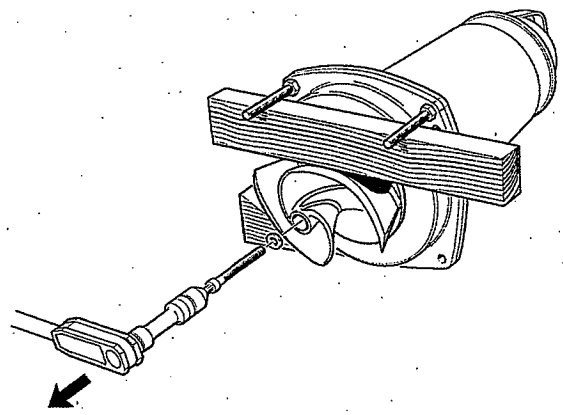

Place the drive unit horizontally. Lock the impeller in place and remove the impeller screw.

WARNING! When laying the pump on its side do not allow the weight of the pump to rest on any portion of the impeller. The impeller must not be allowed to make contact with the concrete floor or other hard and rough surfaces.

Worn impellers can have very sharp edges. Use protective gloves!

3.

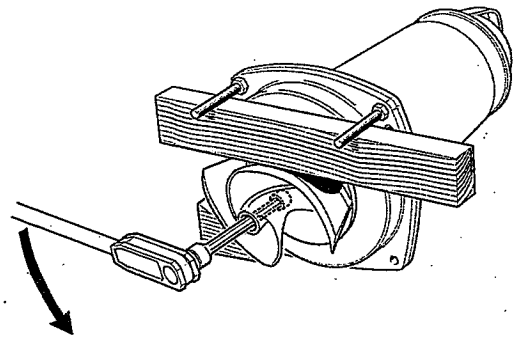

Using a 12 mm hexagon bit adaptor (allen socket) with a 100 mm (4") extension (minimum length) turn the gland screw counter clockwise until the impeller breaks free from the shaft. Remove the impeller.

Installing and setting clearance

1.

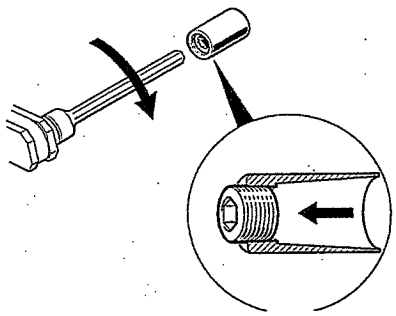

Make sure that the end of the shaft is clean and free from burrs. Polish off any flaws with fine emery cloth. Grease end of shaft, conical sleeve and the threads of the gland screw and the impeller screw. Unscrew the gland screw approximately 5 mm.

2.

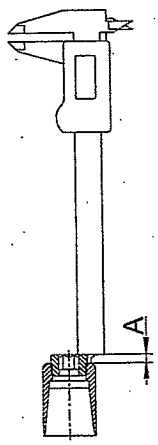

Measure and note the distance A.

NBC_ACLC_PT-000364

3.

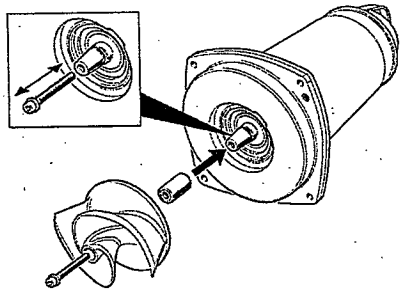

Before assembling, check that the impeller screw is clean and easy to screw into the shaft end (a). This to prevent the shaft to rotate with the impeller screw. Assemble the conical sleeve and the impeller onto the shaft. Fit the impeller screw with washer onto the shaft and tighten to 76 Nm (57 ft lb).

4.

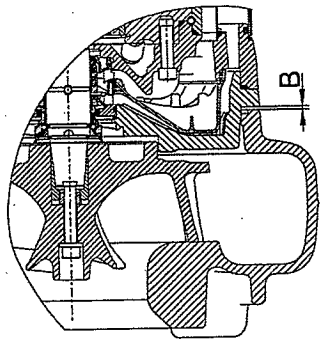

Make sure that the O-ring is removed from the seal housing cover. Place the drive unit in the pump housing. Check the distance between the seal housing cover and the pump housing with a feeler gauge. Check diametrically at four points.
Note the largest measured distance, B. See fig.

5.

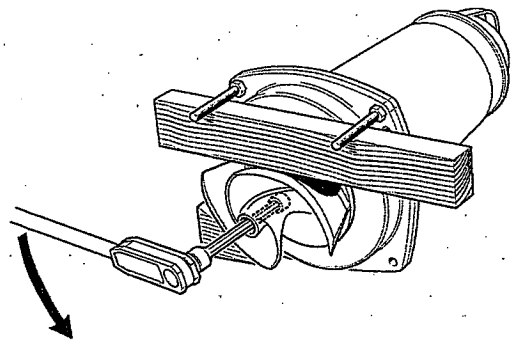

Lift the drive unit out of the pump housing and remove the impeller and conical sleeve.

6.

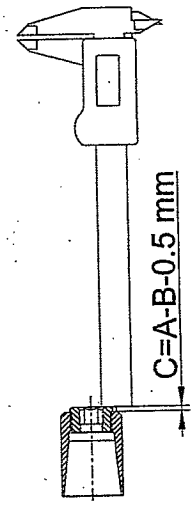

Calculate the measure C according to formula:

C = A - B - 0,5mm

Unscrew the gland screw until C is reached.

7.

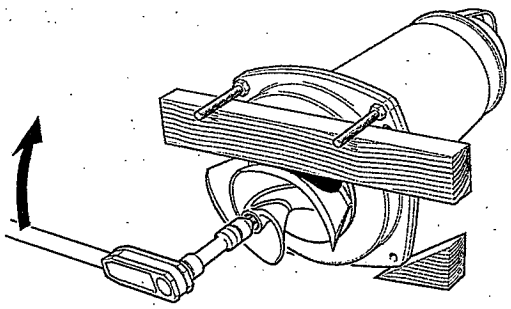

Fit the conical sleeve, impeller and impeller screw with washer and tighten to 76 Nm (57 ft lb).

8.

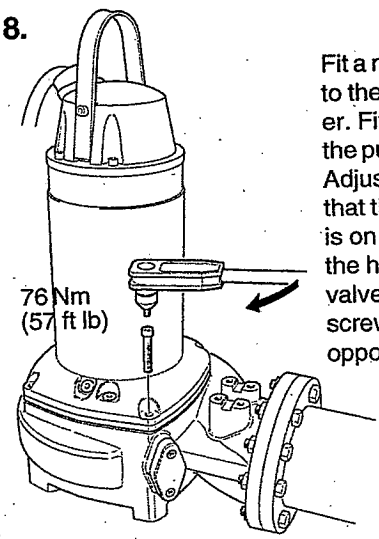

Fit a new greased O-ring to the seal housing cover. Fit the drive unit to the pump housing. Adjust its position so that the inspection hole is on the same side as the hole for the flush valve. Tighten the screws in diagonally opposite pairs.

RECEIVED
JAN 3 1 2007
REGION 7
NBC_ACLC_PT-000365

FAULT TRACING (TROUBLESHOOTING)

A universal instrument multimeter (VOM), a test lamp (continuity tester) and wiring diagram are required in order to carry out fault tracing on the electrical equipment.

Fault tracing shall be done with the power supply disconnected and locked off, except for those checks which cannot be performed without voltage.

Always make sure that there is no one near the pump when the power supply is turned on.

Use the following checklist as an aid to fault tracing. It is assumed that the pump and installation have formerly functioned satisfactorily.

Electrical work shall be performed by an authorized electrician.

Follow local safety regulations and observe recommended safety precautions.

1. Pump fails to start

Is an alarm signal indicated on the control panel?

Yes →

Check the cause:
- If the stator temperature is high, check that the impeller rotates freely.
- If there is a fault in the thermistors/thermal contacts, contact a Flygt service shop.
- If the FLS10 indicates an alarm.
- Check that the overload protection is reset.

No ↓

Can the pump be started manually?

Yes →

a) Fault in level equipment (start level regulator). Clean or replace.

b) Fault in control equipment.

Check:
- that the thermal contacts have not opened.
- that all connections are intact.
- relay and contactor coils.
- that the control switch "Man/Auto" makes contact in both positions.

No ↓

Is the installation receiving voltage?

No →

Check:
- that the main power switch is on.
- that there is control voltage to the starter equipment and its fuses are intact.
- that there is voltage in each phase of the supply line.
- that all fuses have continuity and are tight.
- that the overload protection is reset.
- that there is no break in the motor cable.

Yes ↓

Is the impeller stuck? WARNING: disconnect power before checking the impeller.

Yes →

Clean.

Clean the sump.

No ↓

Contact Flygt service shop.

RECEIVED
JAN 3 1 2007
REGION 7

NBC_ACLC_PT-000366

2. Pump starts but motor protection trips

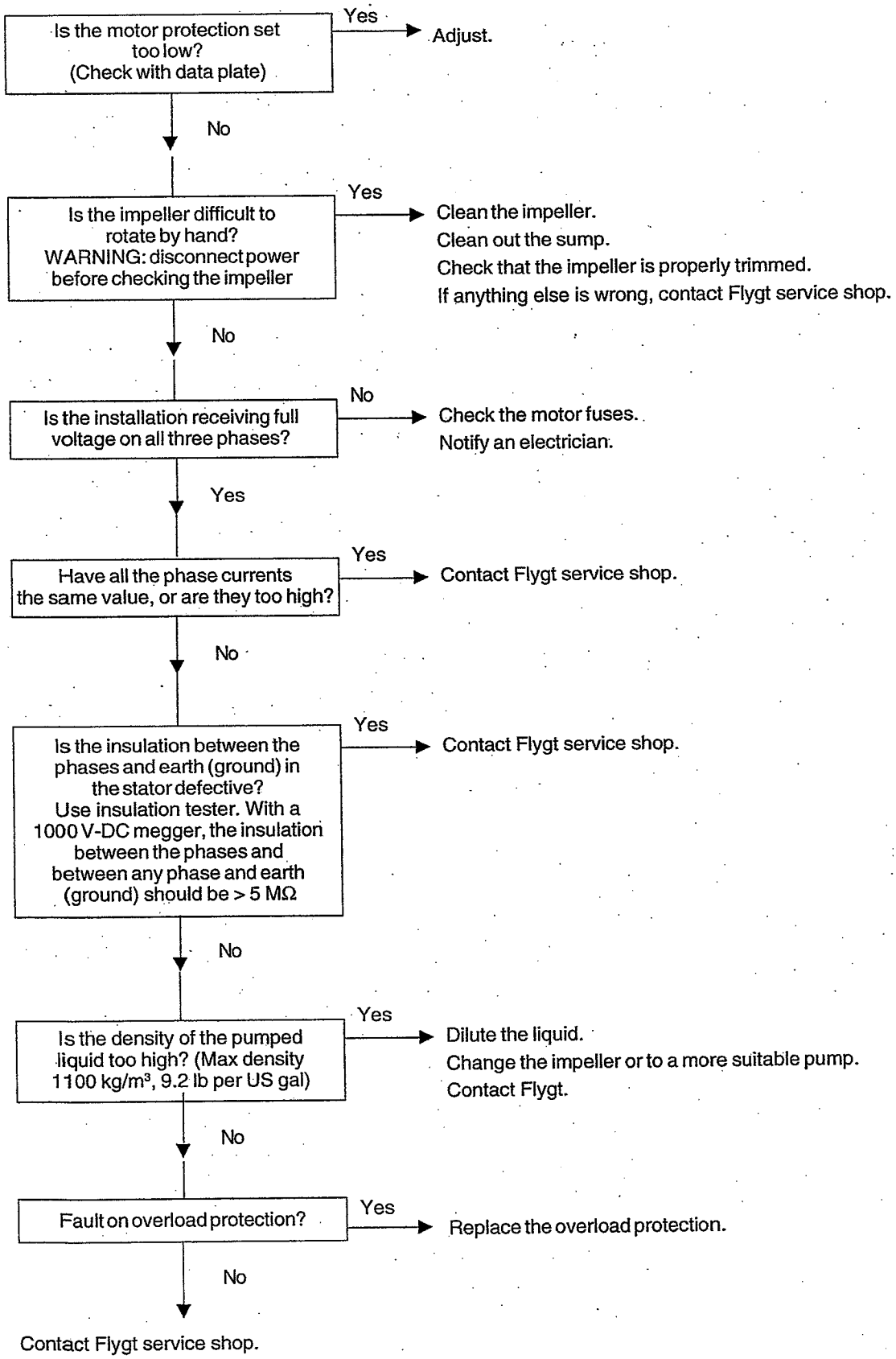

RECEIVED
JAN 3 1 2007
REGION 7

NBC_ACLC_PT-000367

3. The pump does not stop (when level control is used)

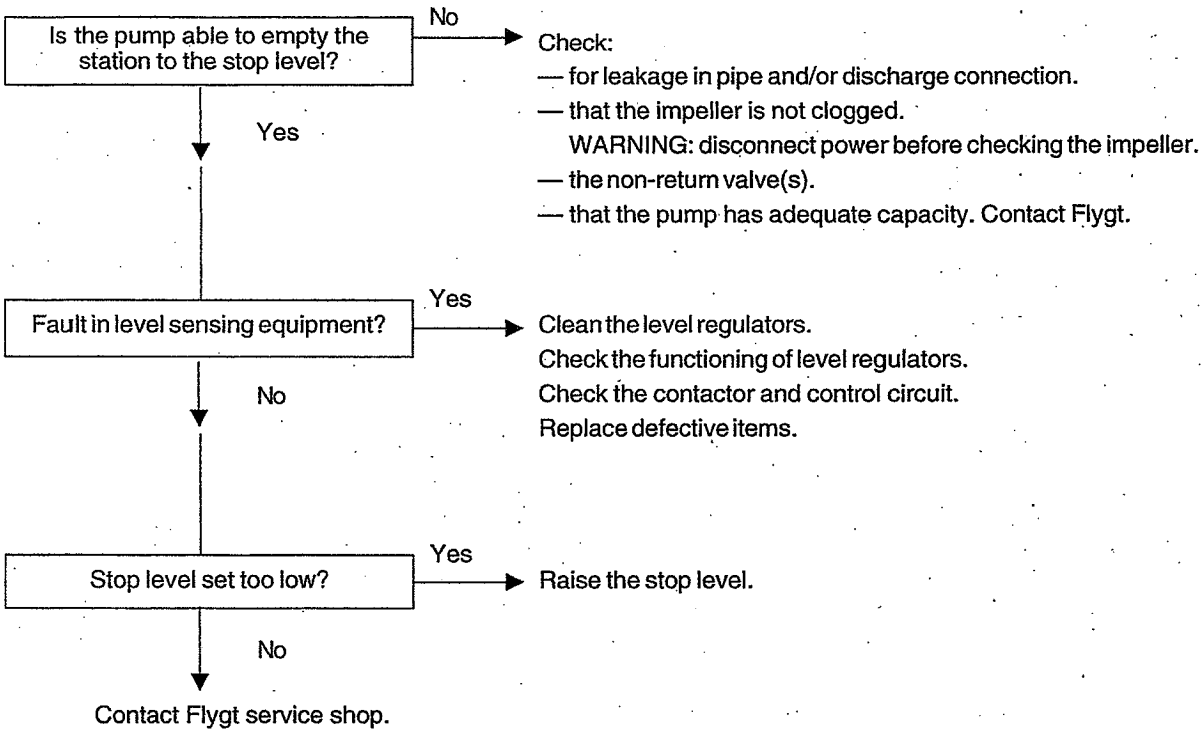

4. The pump starts-stops-starts in rapid sequence

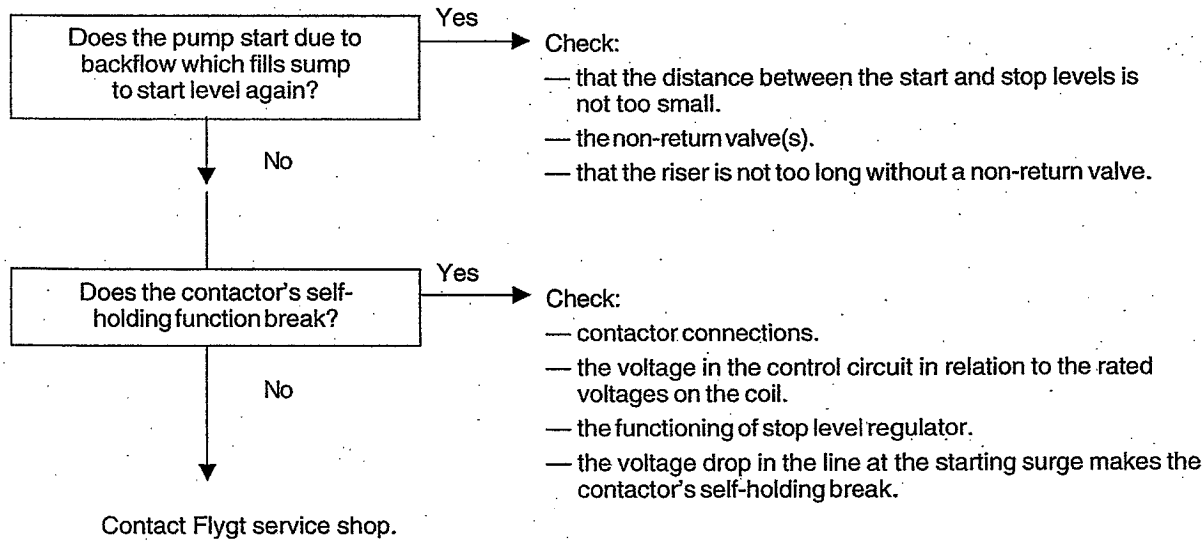

RECEIVED
JAN 3 1 2007
REGION 7

NBC_ACLC_PT-000368

5. Pump runs but delivers too little or no water

Check:

— direction of rotation of pump, see "Before starting".
— that valves are open and intact.
— that pipes and impeller are not clogged.
— that the impeller rotates freely.
— that the suction lift has not been altered.
— for leakage in the pump installation.
— for wear on the impeller, pump and casing/flange.

See also under "Inspection".

Do not override the motor protection repeatedly if it has tripped.

SERVICE LOG

Most recent service date	Pump No.	Hours of operation	Remarks	Sign.

RECEIVED
JAN 3 1 2007
REGION 7

NBC_ACLC_PT-000369