# CALIFORNIA REGIONAL WATER QUALITY CONTROL BOARD

## CENTRAL VALLEY REGION

11020 Sun Center Drive #200, Rancho Cordova, California 95670-6114
Phone (916) 464-3291 • FAX (916) 464-4645
http://www.waterboards.ca.gov/centralvalley

## ORDER NO. R5-2009-XXXX
## NPDES NO. CA0078948

## WASTE DISCHARGE REQUIREMENTS FOR THE CITY OF TURLOCK WATER QUALITY CONTROL FACILITY STANISLAUS COUNTY

The following Discharger is subject to waste discharge requirements as set forth in this Order:

**Table 1. Discharger Information**

| | |
|---|---|
| **Discharger** | City of Turlock |
| **Name of Facility** | Water Quality Control Facility |
| **Facility Address** | 901 S. Walnut Road |
| | Turlock, CA 95380 |
| | Stanislaus County |
| The U.S. Environmental Protection Agency (USEPA) and the Regional Water Quality Control Board have classified this discharge as a major discharge. | |

The discharge by the City of Turlock from the discharge points identified below is subject to waste discharge requirements as set forth in this Order:

**Table 2. Discharge Location**

| Discharge Point | Effluent Description | Discharge Point Latitude | Discharge Point Longitude | Receiving Water |
|---|---|---|---|---|
| 001 | Treated Municipal Wastewater | 37° 27' 50" | 120° 55' 52" | Harding Drain |
| 002 | Treated Municipal Wastewater | 37° 27' 47" | 121° 01' 57" | San Joaquin River |

**Table 3. Administrative Information**

| | |
|---|---|
| This Order was adopted by the Regional Water Quality Control Board on: | **<Adoption Date>** |
| This Order shall become effective on: | **<Effective Date>** |
| This Order shall expire on: | **<Expiration Date>** |
| The Discharger shall file a Report of Waste Discharge in accordance with title 23, California Code of Regulations, as application for issuance of new waste discharge requirements no later than: | **180 days prior to the expiration date** |

**IT IS HEREBY ORDERED**, that Order No. 5-01-122 is rescinded upon the effective date of this Order except for enforcement purposes, and, in order to meet the provisions contained in division 7 of the Water Code (commencing with section 13000) and regulations adopted thereunder, and the provisions of the federal Clean Water Act (CWA) and regulations and guidelines adopted thereunder, the Discharger shall comply with the requirements in this Order.

I, PAMELA C. CREEDON, Executive Officer, do hereby certify that this Order with all attachments is a full, true, and correct copy of an Order adopted by the California Regional Water Quality Control Board, Central Valley Region, on **<Adoption Date>**.

PAMELA C. CREEDON, Executive Officer

T E N T A T I V E O R D E R

19 October 2009

## Table of Contents

I. Facility Information ..... 1
II. Findings ..... 1
III. Discharge Prohibitions ..... 9
IV. Effluent Limitations and Discharge Specifications ..... 10
A. Effluent Limitations – Discharge Point No. 001 (Harding Drain) ..... 10
1. Final Effluent Limitations – Discharge Point No. 001 (Harding Drain) ..... 10
2. Interim Effluent Limitations ..... 11
B. Effluent Limitations – Discharge Point No. 002 (San Joaquin River) ..... 12
1. Final Effluent Limitations – Discharge Point No. 002 (San Joaquin River) ..... 12
2. Interim Effluent Limitations ..... 14
C. Land Discharge Specifications ..... 15
D. Reclamation Specifications – Discharge Point Nos. 003 and 004 ..... 15
V. Receiving Water Limitations ..... 15
A. Surface Water Limitations ..... 15
B. Groundwater Limitations ..... 17
VI. Provisions ..... 18
A. Standard Provisions ..... 18
B. Monitoring and Reporting Program (MRP) Requirements ..... 22
C. Special Provisions ..... 23
1. Reopener Provisions ..... 23
2. Special Studies, Technical Reports and Additional Monitoring Requirements ..... 24
3. Best Management Practices and Pollution Prevention ..... 26
4. Construction, Operation and Maintenance Specifications ..... 27
5. Special Provisions for Municipal Facilities (POTWs Only) ..... 28
6. Other Special Provisions ..... 31
7. Compliance Schedules ..... 31
VII. Compliance Determination ..... 33

## List of Tables

Table 1. Discharger Information ..... Cover
Table 2. Discharge Location ..... Cover
Table 3. Administrative Information ..... Cover
Table 4. Facility Information ..... 1
Table 5. Basin Plan Beneficial Uses ..... 4
Table 6. Effluent Limitations – Discharge Point No. 001 ..... 10
Table 7. Effluent Limitations – Discharge Point No. 002 ..... 13

## List of Attachments

Attachment A – Definitions ..... A-1
Attachment B – Map ..... B-1
Attachment C – Flow Schematic ..... C-1
Attachment D – Standard Provisions ..... D-1
Attachment E – Monitoring and Reporting Program (MRP) ..... E-1
Attachment F – Fact Sheet ..... F-1
Attachment G – Summary of Reasonable Potential Analysis ..... G-1
~~Attachment H – Guidelines for Preparation of an Engineering Report for the Production, Distribution, and Use of Recycled Water ..... H-1~~

# I. FACILITY INFORMATION

The following Discharger is subject to waste discharge requirements as set forth in this Order:

**Table 4. Facility Information**

| | |
|---|---|
| **Discharger** | City of Turlock |
| **Name of Facility** | Water Quality Control Facility |
| **Facility Address** | 901 S. Walnut Road |
| | Turlock, CA 95380 |
| | Stanislaus County |
| **Facility Contact, Title, and Phone** | Dan Madden, Municipal Services Director, (209) 668-5590 |
| **Mailing Address** | 156 South Broadway, Suite 270 |
| | Turlock, CA 95380 |
| **Type of Facility** | Publicly Owned Treatment Works |
| **Facility Design Flow** | 20 million gallons per day (MGD) |

# II. FINDINGS

The California Regional Water Quality Control Board, Central Valley Region (hereinafter Regional Water Board), finds:

**A. Background.** The City of Turlock (hereinafter Discharger) is currently discharging pursuant to Order No. 5-01-122 and National Pollutant Discharge Elimination System (NPDES) Permit No. CA0078948. The Discharger submitted a Report of Waste Discharge, dated 27 April 2004, and applied for a NPDES permit renewal to discharge up to 20 MGD of tertiary treated wastewater from the Water Quality Control Facility, hereinafter Facility. Supplemental information was requested on 16 June 2004 and was submitted on 16 July 2008. The application was deemed complete on 18 July 2008.

For the purposes of this Order, references to the “discharger” or “permittee” in applicable federal and state laws, regulations, plans, or policy are held to be equivalent to references to the Discharger herein.

**B. Facility Description.** The Discharger owns and operates a publicly owned treatment works (POTW). The treatment system at the Facility consists of screening, primary treatment (flotation), secondary treatment (activated sludge) that includes biotowers, aeration and nitrification (waste solids are treated via a gravity belt thickener and anaerobic digestion), secondary clarification, high rate clarifier / thickener, cloth disk filters, and chlorine disinfection and sodium bisulfite dechlorination.

Currently, wastewater is discharged from Discharge Point No. 001 (see table on cover page) to Harding Drain [also known as the Turlock Irrigation District (TID) Lateral 5 Drain], a water of the United States, within the Middle San Joaquin – Lower Merced – Lower Stanislaus Watershed. The Discharger is currently planning to construct a

dedicated pipeline to transport and discharge treated wastewater from Discharge Point No. 002 (see table on cover page) to the San Joaquin River, a water of the United States, within the Middle San Joaquin – Lower Merced – Lower Stanislaus Watershed. Attachment B provides a map of the area around the Facility. Attachment C provides a flow schematic of the Facility.

The Discharger currently provides 2.0 MGD of recycled water for cooling purposes to the Walnut Energy Center, a 250 Megawatt power plant owned and operated by the Turlock Irrigation District at Discharge Point No. 003 and to the Pedretti Sports Complex for irrigation purposes at Discharge Point No. 004. Reclamation specifications are included in this Order for the discharge of recycled water at ~~this~~ these locations.

**C. Legal Authorities.** This Order is issued pursuant to section 402 of the federal Clean Water Act (CWA) and implementing regulations adopted by the U.S. Environmental Protection Agency (USEPA) and Chapter 5.5, Division 7 of the California Water Code (commencing with Section 13370). It shall serve as a NPDES permit for point source discharges from this facility to surface waters. This Order also serves as Waste Discharge Requirements (WDRs) pursuant to Article 4, Chapter 4, Division 7 of the Water Code (commencing with Section 13260).

**D. Background and Rationale for Requirements**. The Regional Water Board developed the requirements in this Order based on information submitted as part of the application, through monitoring and reporting programs, and other available information. The Fact Sheet (Attachment F), which contains background information and rationale for Order requirements, is hereby incorporated into this Order and constitutes part of the Findings for this Order. Attachments A through E and ~~H~~ G are also incorporated into this Order.

**E. California Environmental Quality Act (CEQA).** Under Water Code section 13389, this action to adopt an NPDES permit is exempt from the provisions of CEQA, Public Resources Code sections 21100-21177.

**F. Technology-based Effluent Limitations.** Section 301(b) of the CWA and implementing USEPA permit regulations at Title 40 of the Code of Federal Regulations (CFR), Part 122.44 (40 CFR 122.44) require that permits include conditions meeting applicable technology-based requirements at a minimum, and any more stringent effluent limitations necessary to meet applicable water quality standards. The discharge authorized by this Order must meet minimum federal technology-based requirements based on Secondary Treatment Standards at 40 CFR Part 133. A detailed discussion of the technology-based effluent limitations development is included in the Fact Sheet (Attachment F).

**G. Water Quality-based Effluent Limitations.** Section 301(b) of the CWA and 40 CFR 122.44(d) require that permits include limitations more stringent than applicable federal technology-based requirements where necessary to achieve applicable water quality standards. This Order contains requirements, expressed as a technology equivalence requirement, that are necessary to achieve water quality standards. The Regional

Water Board has considered the factors listed in CWC Section 13241 in establishing these requirements. The rationale for these requirements, which consist of tertiary treatment or equivalent requirements, is discussed in the Fact Sheet.

40 CFR 122.44(d)(1)(i) mandates that permits include effluent limitations for all pollutants that are or may be discharged at levels that have the reasonable potential to cause or contribute to an exceedance of a water quality standard, including numeric and narrative objectives within a standard. Where reasonable potential has been established for a pollutant, but there is no numeric criterion or objective for the pollutant, water quality-based effluent limitations (WQBELs) must be established using: (1) USEPA criteria guidance under CWA Section 304(a), supplemented where necessary by other relevant information; (2) an indicator parameter for the pollutant of concern; or (3) a calculated numeric water quality criterion, such as a proposed State criterion or policy interpreting the State's narrative criterion, supplemented with other relevant information, as provided in 40 CFR 122.44(d)(1)(vi).

**H. Water Quality Control Plans.** The Regional Water Board adopted a *Water Quality Control Plan, Fourth Edition (Revised October 2007), for the Sacramento and San Joaquin River Basins* (hereinafter Basin Plan) that designates beneficial uses, establishes water quality objectives, and contains implementation programs and policies to achieve those objectives for all waters addressed through the plan. In addition, the Basin Plan implements State Water Resources Control Board (State Water Board) Resolution No. 88-63, which established state policy that all waters, with certain exceptions, should be considered suitable or potentially suitable for municipal or domestic supply.

The beneficial uses of the San Joaquin River from the mouth of the Merced River to Vernalis, downstream of the discharge to Harding Drain from Discharge Point No. 001 and to which the Discharger proposes to discharge from Discharge Point No. 002, are municipal and domestic supply (potential); agricultural irrigation, including stock watering; industrial process water supply; water contact recreation, including canoeing and rafting; non-contact water recreation; warm freshwater aquatic habitat; warm and cold migration of aquatic organisms; warm spawning, reproduction, and/or early development; wildlife habitat.

The Basin Plan at page II-2.00 states that the "*…beneficial uses of any specifically identified water body generally apply to its tributary streams.*" The Discharger currently discharges to Harding Drain from Discharge Point No. 001. The Basin Plan does not specifically identify beneficial uses for Harding Drain, but does identify present and potential uses for the San Joaquin River from the mouth of the Merced River to Vernalis, to which Harding Drain is tributary. While flow in Harding Drain is tributary to the San Joaquin River, Harding Drain itself is a constructed agricultural drain. The Regional Water Board finds that Harding Drain is not a "stream" as used in the Basin Plan's tributary language, and as a constructed agricultural drain, Harding Drain is not subject to the tributary provisions of the Basin Plan. Therefore, although Harding Drain is a water of the United States, the Regional Water Board has not designated beneficial

uses of Harding Drain in the Basin Plan. The beneficial uses of Harding Drain are therefore identified by other statutory designations and/or the actual existing beneficial uses of the receiving water and include the following: municipal and domestic supply; agricultural supply; industrial service supply (potential); industrial process supply (potential); water contact recreation; non-contact water recreation; groundwater recharge; freshwater replenishment; warm freshwater habitat; cold freshwater habitat; warm and cold migration of aquatic organisms; warm and cold spawning, reproduction, and/or early development; and wildlife habitat.

Thus, as discussed in detail in the Fact Sheet, beneficial uses applicable to Harding Drain and the San Joaquin River are as follows:

**Table 5. Basin Plan Beneficial Uses**

| Discharge Point | Receiving Water Name | Beneficial Use(s) |
|---|---|---|
| 001 | Harding Drain | Existing:<br>Municipal and domestic supply; agricultural supply; water contact recreation; non-contact recreation; groundwater recharge; freshwater replenishment; warm freshwater habitat; cold freshwater habitat; warm and cold migration of aquatic organisms; warm and cold spawning, reproduction, and/or early development; and wildlife habitat.<br>Intermittent:<br>N/A<br>Potential:<br>Industrial service supply and industrial process supply. |
| 002 | San Joaquin River | Existing:<br>Agricultural irrigation, including stock watering; industrial process water supply; water contact recreation, including canoeing and rafting; non-contact water recreation; warm freshwater aquatic habitat; warm and cold migration of aquatic organisms; warm spawning, reproduction, and/or early development; and wildlife habitat.<br>Intermittent:<br>N/A<br>Potential:<br>Municipal and domestic supply. |

The Basin Plan includes a list of Water Quality Limited Segments (WQLSs), which are defined as "…*those sections of lakes, streams, rivers or other fresh water bodies where water quality does not meet (or is not expected to meet) water quality standards even after the application of appropriate limitations for point sources (40 CFR 130, et seq.).*" The Basin Plan also states, "*Additional treatment beyond minimum federal standards will be imposed on dischargers to WQLSs. Dischargers will be assigned or allocated a maximum allowable load of critical pollutants so that water quality objectives can be met in the segment.*" The 2006 CWA section 303(d) listing for Harding Drain includes

chlorpyrifos and unknown toxicity due to agriculture. The 2006 303(d) listing for the San Joaquin River from the Merced River to the Tuolumne River includes boron, DDT, electrical conductivity, Group A Pesticides, mercury, and unknown toxicity. Furthermore, the southern portion of the Sacramento – San Joaquin Delta downstream of the discharge is listed for chlorpyrifos, DDT, diazinon, electrical conductivity, exotic species, Group A pesticides, mercury, and unknown toxicity. TMDLs and Basin Plan amendments have been developed and adopted for diazinon and chlorpyrifos runoff and salt and boron in the lower San Joaquin River.

I. **National Toxics Rule (NTR) and California Toxics Rule (CTR).** USEPA adopted the NTR on 22 December 1992, and later amended it on 4 May 1995 and 9 November 1999. About forty criteria in the NTR applied in California. On 18 May 2000, USEPA adopted the CTR. The CTR promulgated new toxics criteria for California and, in addition, incorporated the previously adopted NTR criteria that were applicable in the state. The CTR was amended on 13 February 2001. These rules contain water quality criteria for priority pollutants.

J. **State Implementation Policy.** On 2 March 2000, the State Water Board adopted the *Policy for Implementation of Toxics Standards for Inland Surface Waters, Enclosed Bays, and Estuaries of California* (State Implementation Policy or SIP). The SIP became effective on 28 April 2000 with respect to the priority pollutant criteria promulgated for California by the USEPA through the NTR and to the priority pollutant objectives established by the Regional Water Board in the Basin Plan. The SIP became effective on 18 May 2000 with respect to the priority pollutant criteria promulgated by the USEPA through the CTR. The State Water Board adopted amendments to the SIP on 24 February 2005 that became effective on 13 July 2005. The SIP establishes implementation provisions for priority pollutant criteria and objectives and provisions for chronic toxicity control. Requirements of this Order implement the SIP.

K. **Compliance Schedules and Interim Requirements.** In general, an NPDES permit must include final effluent limitations that are consistent with Clean Water Act section 301 and with 40 CFR 122.44(d). There are exceptions to this general rule. The State Water Board has concluded that where the Regional Water Board's Basin Plan allows for schedules of compliance and the Regional Water Board is newly interpreting a narrative standard, it may include schedules of compliance in the permit to meet effluent limits that implement a narrative standard. See In the Matter of Waste Discharge Requirements for Avon Refinery (State Water Board Order WQ 2001-06 at pp. 53-55). See also Communities for a Better Environment et al. v. State Water Resources Control Board, 34 Cal.Rptr.3d 396, 410 (2005). The Basin Plan for the Sacramento and San Joaquin Rivers includes a provision that authorizes the use of compliance schedules in NPDES permits for water quality objectives that are adopted after the date of adoption of the Basin Plan, which was 25 September, 1995 (see Basin Plan at page IV-16). Consistent with the State Water Board's Order in the CBE matter, the Regional Water Board has the discretion to include compliance schedules in NPDES permits when it is including an effluent limitation that is a "new interpretation" of a narrative water quality objective. This conclusion is also consistent with the United States Environmental

Protection Agency policies and administrative decisions. See, e.g., Whole Effluent Toxicity (WET) Control Policy. The Regional Water Board, however, is not required to include a schedule of compliance, but may issue a Time Schedule Order pursuant to Water Code section 13300 or a Cease and Desist Order pursuant to Water Code section 13301 where it finds that the discharger is violating or threatening to violate the permit. The Regional Water Board will consider the merits of each case in determining whether it is appropriate to include a compliance schedule in a permit, and, consistent with the Basin Plan, should consider feasibility of achieving compliance, and must impose a schedule that is as short as practicable to achieve compliance with the objectives, criteria, or effluent limit based on the objective or criteria.

For CTR constituents, Section 2.1 of the SIP provides that, based on a Discharger's request and demonstration that it is infeasible for an existing Discharger to achieve immediate compliance with an effluent limitation derived from a CTR criterion, compliance schedules may be allowed in an NPDES permit. Unless an exception has been granted under section 5.3 of the SIP, a compliance schedule may not exceed 5 years from the date that the permit is issued or reissued, nor may it extend beyond 10 years from the effective date of the SIP (or 18 May 2010) to establish and comply with CTR criterion-based effluent limitations. Where a compliance schedule for a final effluent limitation exceeds 1 year, the Order must include interim numeric limitations for that constituent or parameter. Where allowed by the Basin Plan, compliance schedules and interim effluent limitations or discharge specifications may also be granted to allow time to implement a new or revised water quality objective. This Order includes compliance schedules and interim effluent limitations. A detailed discussion of the basis for the compliance schedule(s) and interim effluent limitation(s) and/or discharge specifications is included in the Fact Sheet.

**L. Alaska Rule.** On 30 March 2000, USEPA revised its regulation that specifies when new and revised state and tribal water quality standards (WQS) become effective for CWA purposes. (40 CFR 131.21; 65 Fed. Reg. 24641 (April 27, 2000).) Under the revised regulation (also known as the Alaska rule), new and revised standards submitted to USEPA after 30 May 2000, must be approved by USEPA before being used for CWA purposes. The final rule also provides that standards already in effect and submitted to USEPA by 30 May 2000 may be used for CWA purposes, whether or not approved by USEPA.

**M. Stringency of Requirements for Individual Pollutants.** This Order contains both technology-based effluent limitations and WQBELs for individual pollutants. The technology-based effluent limitations consist of restrictions on 5-day biochemical oxygen demand ($BOD_5$) and total suspended solids (TSS). The WQBELs consist of restrictions on aluminum, ammonia, boron (Discharge Point No. 002), carbon tetrachloride, chloride (Discharge Point No. 002), chlorine residual, chlorodibromomethane, copper, dichlorobromomethane, electrical conductivity, iron (Discharge Point No. 002), lead (Discharge Point No. 002), manganese (Discharge Point No. 002), nitrate, pH, selenium, silver (Discharge Point No. 002), and pathogens. This Order's technology-based pollutant restrictions implement the minimum, applicable

federal technology-based requirements. In addition, this Order includes effluent limitations for $BOD_5$, TSS, and pathogens to meet numeric objectives or protect beneficial uses.

WQBELs have been scientifically derived to implement water quality objectives that protect beneficial uses. Both the beneficial uses and the water quality objectives have been approved pursuant to federal law and are the applicable federal water quality standards. To the extent that toxic pollutant WQBELs were derived from the CTR, the CTR is the applicable standard pursuant to 40 CFR 131.38. The scientific procedures for calculating the individual WQBELs are based on the CTR-SIP, which was approved by USEPA on 1 May 2001. All beneficial uses and water quality objectives contained in the Basin Plan were approved under state law and submitted to and approved by USEPA prior to 30 May 2000. Any water quality objectives and beneficial uses submitted to USEPA prior to 30 May 2000, but not approved by USEPA before that date, are nonetheless "*applicable water quality standards for purposes of the [Clean Water] Act*" pursuant to 40 CFR 131.21(c)(1). Collectively, this Order's restrictions on individual pollutants are no more stringent than required to implement the technology-based requirements of the CWA and the applicable water quality standards for purposes of the CWA.

**N. Antidegradation Policy.** 40 CFR 131.12 requires that the state water quality standards include an antidegradation policy consistent with the federal policy. The State Water Board established California's antidegradation policy in State Water Board Resolution No. 68-16. Resolution No. 68-16 is consistent with the federal antidegradation policy where the federal policy applies under federal law. Resolution No. 68-16 requires that existing quality of waters be maintained unless degradation is justified based on specific findings. The Regional Water Board's Basin Plan implements, and incorporates by reference, both the state and federal antidegradation policies. As discussed in detail in the Fact Sheet the permitted discharge is consistent with the antidegradation provision of 40 CFR 131.12 and State Water Board Resolution No. 68-16.

**O. Anti-Backsliding Requirements.** Sections 402(o)(2) and 303(d)(4) of the CWA and federal regulations at 40 CFR 122.44(l) prohibit backsliding in NPDES permits. These anti-backsliding provisions require effluent limitations in a reissued permit to be as stringent as those in the previous permit, with some exceptions where limitations may be relaxed. All effluent limitations in this Order are at least as stringent as the effluent limitations in the previous Order.

**P. Endangered Species Act.** This Order does not authorize any act that results in the taking of a threatened or endangered species or any act that is now prohibited, or becomes prohibited in the future, under either the California Endangered Species Act (Fish and Game Code sections 2050 to 2097) or the Federal Endangered Species Act (16 U.S.C.A. sections 1531 to 1544). This Order requires compliance with effluent limits, receiving water limits, and other requirements to protect the beneficial uses of waters of the state. The Discharger is responsible for meeting all requirements of the applicable Endangered Species Act.

**Q. Monitoring and Reporting.** 40 CFR 122.48 requires that all NPDES permits specify requirements for recording and reporting monitoring results. Water Code sections 13267 and 13383 authorizes the Regional Water Board to require technical and monitoring reports. The Monitoring and Reporting Program establishes monitoring and reporting requirements to implement federal and State requirements. This Monitoring and Reporting Program is provided in Attachment E.

**R. Standard and Special Provisions.** Standard Provisions, which apply to all NPDES permits in accordance with 40 CFR 122.41, and additional conditions applicable to specified categories of permits in accordance with 40 CFR 122.42, are provided in Attachment D. The discharger must comply with all standard provisions and with those additional conditions that are applicable under 40 CFR 122.42. The Regional Water Board has also included in this Order special provisions applicable to the Discharger. A rationale for the special provisions contained in this Order is provided in the attached Fact Sheet.

**S. Provisions and Requirements Implementing State Law.** The provisions/requirements in subsections ~~IV.C,~~ V.B, VI.A.2.v, ~~and~~ VI.C.4.a, and VI.C.4.b of this Order are included to implement state law only. These provisions/requirements are not required or authorized under the federal CWA; consequently, violations of these provisions/requirements are not subject to the enforcement remedies that are available for NPDES violations.

**T. Notification of Interested Parties.** The Regional Water Board has notified the Discharger and interested agencies and persons of its intent to prescribe Waste Discharge Requirements for the discharge and has provided them with an opportunity to submit their written comments and recommendations. Details of notification are provided in the Fact Sheet of this Order.

**U. Consideration of Public Comment.** The Regional Water Board, in a public meeting, heard and considered all comments pertaining to the discharge. Details of the Public Hearing are provided in the Fact Sheet of this Order.

## III. DISCHARGE PROHIBITIONS

A. Discharge of wastewater at a location or in a manner different from that described in the Findings is prohibited.

B. The by-pass or overflow of wastes to surface waters is prohibited, except as allowed by Federal Standard Provisions I.G. and I.H. (Attachment D).

C. Neither the discharge nor its treatment shall create a nuisance as defined in Section 13050 of the California Water Code.

D. The Discharger shall not allow pollutant-free wastewater to be discharged into the collection, treatment, and disposal system in amounts that significantly diminish the system's capability to comply with this Order. Pollutant-free wastewater means rainfall, groundwater, cooling waters, and condensates that are essentially free of pollutants.

E. Upon commencement of discharges to the San Joaquin River from Discharge Point No. 002, the discharge of wastewater to Harding Drain from Discharge Point No. 001 is prohibited, except in the event of a power failure at the pipeline pump station or other emergency condition associated with the pump station or pipeline to Discharge Point No. 002.

# IV. EFFLUENT LIMITATIONS AND DISCHARGE SPECIFICATIONS

## A. Effluent Limitations – Discharge Point No. 001 (Harding Drain)

### 1. Final Effluent Limitations – Discharge Point No. 001 (Harding Drain)

a. The Discharger shall maintain compliance with the following effluent limitations at Discharge Point No. 001 for continuous and emergency discharges to Harding Drain, with compliance measured at Monitoring Location EFF-001 as described in the attached MRP (Attachment E):

**Table 6. Effluent Limitations – Discharge Point No. 001**

| Parameter | Units | Effluent Limitations | | | | |
|---|---|---|---|---|---|---|
| | | Average Monthly | Average Weekly | Maximum Daily | Instantaneous Minimum | Instantaneous Maximum |
| ***Conventional Pollutants*** | | | | | | |
| Biochemical Oxygen Demand, 5-day @ 20°C | mg/L | 10 | 15 | 20 | -- | -- |
| | lbs/day[1] | 1,668 | 2,502 | 3,336 | -- | -- |
| Total Suspended Solids | mg/L | 10 | 15 | 20 | -- | -- |
| | lbs/day[1] | 1,668 | 2,502 | 3,336 | -- | -- |
| pH | standard units | -- | -- | -- | 6.5 | 8.5 |
| ***Priority Pollutants*** | | | | | | |
| Copper, Total Recoverable | µg/L | 8.9 | -- | 15 | -- | -- |
| Selenium, Total Recoverable | µg/L | 3.7 | -- | 9.1 | -- | -- |
| | lbs/day[1] | 0.62 | -- | 1.52 | -- | -- |
| Carbon Tetrachloride | µg/L | 0.25 | -- | 0.72 | -- | -- |
| Chlorodibromomethane | µg/L | 0.41 | -- | 0.78 | -- | -- |
| Dichlorobromomethane | µg/L | 0.56 | -- | 0.81 | -- | -- |
| ***Non-Conventional Pollutants*** | | | | | | |
| Ammonia Nitrogen, Total (as N) | mg/L | 1.1 | -- | 2.1 | -- | -- |
| | lbs/day[1] | 183 | -- | 350 | -- | -- |
| Nitrate Nitrogen, Total (as N) | mg/L | 10 | -- | -- | -- | -- |
| Total Coliform Organisms | MPN/100 mL | -- | -- | -- | -- | 240 |

[1] Based on a design flow of 20 MGD.

b. **Percent Removal:** The average monthly percent removal of $BOD_5$ and TSS shall not be less than 85 percent.

c. **Acute Whole Effluent Toxicity.** Survival of aquatic organisms in 96-hour bioassays of undiluted waste shall be no less than:

i. 70%, minimum for any one bioassay; and
ii. 90%, median for any three consecutive bioassays.

d. **Chronic Whole Effluent Toxicity.** There shall be no chronic whole effluent toxicity in the effluent discharge.

e. **Total Residual Chlorine.** Effluent total residual chlorine shall not exceed:

   i. 0.011 mg/L, as a 4-day average; and
   ii. 0.019 mg/L, as a 1-hour average.

f. **Total Coliform Organisms.** Effluent total coliform organisms shall not exceed:

   i. 2.2 most probable number (MPN) per 100 mL, as a 7-day median; and
   ii. 23 MPN/100 mL, more than once in any 30-day period.

g. **Average Dry Weather Flow.** The average dry weather flow shall not exceed 20 MGD.

h. **Electrical Conductivity.** The discharge of electrical conductivity shall not exceed the following[1]:

   i. 1,000 µmhos/cm, as a monthly average from **1 September to 31 March**; and
   ii. 700 µmhos/cm, as a monthly average from **1 April through 31 August**.

   Compliance with final effluent limitations for electrical conductivity is not required until 28 July 2022 (all water year types, except critically dry) or 28 July 2026 (critically dry water years), per the compliance schedule in section VI.C.7.a.

i. **Aluminum, Total Recoverable.** For a calendar year, the annual average effluent concentration shall not exceed 200 µg/L.

**2. Interim Effluent Limitations**

a. **Mercury.** The total annual mass discharge of total mercury shall not exceed 0.82 pounds.

b. **Salinity (as Electrical Conductivity). Effective immediately**, the annual average discharge of salinity, measured as electrical conductivity, shall not exceed 979 µmhos/cm. This interim performance-based limitation shall be in effect until the final effluent limitations under IV.A.1.h, which implement the final waste load allocations established in the TMDL for Salt and Boron in the Lower San Joaquin River, are in effect.

[1] ~~Compliance with final effluent limitations for electrical conductivity (Effluent Limitations IV.A.1.h) is not required until 1 January 2016, per the compliance schedule in section VI.C.7.a.~~

## B. Effluent Limitations – Discharge Point No. 002 (San Joaquin River)

### 1. Final Effluent Limitations – Discharge Point No. 002 (San Joaquin River)

a. The Discharger shall maintain compliance with the following effluent limitations at Discharge Point No. 002, with compliance measured at Monitoring Location EFF-002 as described in the attached MRP (Attachment E):

**Table 7. Effluent Limitations – Discharge Point No. 002**

| Parameter | Units | Effluent Limitations | | | | |
|---|---|---|---|---|---|---|
| | | Average Monthly | Average Weekly | Maximum Daily | Instantaneous Minimum | Instantaneous Maximum |
| ***Conventional Pollutants*** | | | | | | |
| Biochemical Oxygen Demand, 5-day @ 20°C | mg/L | 10 | 15 | 20 | -- | -- |
| | lbs/day[1] | 1,668 | 2,502 | 3,336 | -- | -- |
| Total Suspended Solids | mg/L | 10 | 15 | 20 | -- | -- |
| | lbs/day[1] | 1,668 | 2,502 | 3,336 | -- | -- |
| pH | standard units | -- | -- | -- | 6.5 | 8.5 |
| ***Priority Pollutants*** | | | | | | |
| Copper, Total Recoverable | µg/L | 8.9 | -- | 15 | -- | -- |
| Lead, Total Recoverable | µg/L | 2.6 | -- | 3.9 | | |
| Selenium, Total Recoverable | µg/L | 3.7 | -- | 9.1 | -- | -- |
| | lbs/day[1] | 0.62 | -- | 1.52 | -- | -- |
| Silver, Total Recoverable | µg/L | 1.2 | -- | 2.3 | | |
| Carbon Tetrachloride | µg/L | ~~4.1~~4.2 | -- | 12 | -- | -- |
| Chlorodibromomethane | µg/L | ~~7.3~~7.6 | -- | 14 | -- | -- |
| Dichlorobromomethane | µg/L | ~~10~~11 | -- | ~~15~~16 | -- | -- |
| ***Non-Conventional Pollutants*** | | | | | | |
| Aluminum, Total Recoverable | µg/L | 261 | -- | 750 | -- | -- |
| Ammonia Nitrogen, Total (as N) | mg/L | 1.1 | -- | 2.1 | -- | -- |
| | lbs/day[1] | 183 | -- | 350 | -- | -- |
| Chloride | mg/L | 203 | -- | 328 | -- | -- |
| Nitrate Nitrogen, Total (as N) | mg/L | ~~26~~31 | -- | -- | -- | -- |
| Total Coliform Organisms | MPN/100 mL | -- | -- | -- | -- | 240 |

[1] Based on a design flow of 20 MGD.

b. **Percent Removal:** The average monthly percent removal of $BOD_5$ and TSS shall not be less than 85 percent.

c. **Acute Whole Effluent Toxicity.** Survival of aquatic organisms in 96-hour bioassays of undiluted waste shall be no less than:

   i. 70%, minimum for any one bioassay; and
   ii. 90%, median for any three consecutive bioassays.

d. **Chronic Whole Effluent Toxicity.** There shall be no chronic whole effluent toxicity in the effluent discharge.

e. **Total Residual Chlorine.** Effluent total residual chlorine shall not exceed:

   i. 0.011 mg/L, as a 4-day average; and
   ii. 0.019 mg/L, as a 1-hour average.

f. **Total Coliform Organisms.** Effluent total coliform organisms shall not exceed:

   i. 2.2 most probable number (MPN) per 100 mL, as a 7-day median; and
   ii. 23 MPN/100 mL, more than once in any 30-day period.

g. **Average Dry Weather Flow.** The average dry weather flow shall not exceed 20 MGD.

h. **Electrical Conductivity.** The discharge of electrical conductivity shall not exceed the following[2]:

   i. 1,000 µmhos/cm, as a monthly average from **1 September to 31 March**; and
   ii. 700 µmhos/cm, as a monthly average from **1 April through 31 August**.

   Compliance with final effluent limitations for electrical conductivity is not required until 28 July 2022 (all water year types, except critically dry) or 28 July 2026 (critically dry water years), per the compliance schedule in section VI.C.7.a.

i. **Boron, Total Recoverable.** The discharge of boron shall not exceed the following:

   i. 2.0 mg/L, as a daily maximum from **15 March through 15 September**;
   ii. 0.8 mg/L, as a monthly average from **15 March through 15 September**;
   iii. 2.6 mg/L, as a daily maximum from **16 September through 14 March**; and
   iv. 1.0 mg/L, as a monthly average from **16 September through 14 March**.

j. **Aluminum, Total Recoverable.** For a calendar year, the annual average effluent concentration shall not exceed 200 µg/L.

k. **Iron, Total Recoverable.** For a calendar year, the annual average effluent concentration shall not exceed 300 µg/L.

l. **Manganese, Total Recoverable.** For a calendar year, the annual average effluent concentration shall not exceed 50 µg/L.

**2. Interim Effluent Limitations**

a. **Mercury.** The total annual mass discharge of total mercury shall not exceed 0.82 pounds.

b. **Salinity (as Electrical Conductivity). Effective immediately**, the annual average discharge of salinity, measured as electrical conductivity, shall not exceed 979 µmhos/cm. This interim performance-based limitation shall be in effect until the final effluent limitations under IV.B.1.h, which implement final waste load allocations established in the TMDL for Salt and Boron in the Lower San Joaquin River, are in effect.

---

[2] ~~Compliance with final effluent limitations for electrical conductivity (Effluent Limitations IV.B.1.h) is not required until 1 January 2016, per the compliance schedule in section VI.C.7.a.~~

### C. Land Discharge Specifications

**[NOT APPLICABLE]**

### D. Reclamation Specifications – Discharge Point Nos. 003 and 004

1. Public contact with the reclaimed water shall be precluded or controlled through such means as fences, signs, and other acceptable alternatives.

2. All reclaimed water equipment, pumps, piping, valves, and outlets shall be appropriately marked to differentiate them from potable facilities, and these shall be of a type, or secured in a manner, that permits operation by authorized personnel only.

3. Reclaimed water shall be used in compliance with Title 22, Division 4, Chapter 3, Article 3, *Uses of Recycled Water* and this Order.

4. -The Discharger shall also maintain compliance with the following reclamation specifications and effluent limitations at Discharge Point Nos. 003 and 004, with compliance measured at Monitoring Location REC-001 and REC-002, respectively, as described in the attached MRP.

   a. **Tertiary Treated Effluent.** The Discharger shall treat the wastewater such that it complies with Title 22 CCR, Section 60301.230 ("Disinfected Tertiary Recycled Water") or equivalent.

   b. **Total Coliform Organisms**. Effluent total coliform organisms shall not exceed:

      i. 2.2 most probable number (MPN) per 100 mL, as a 7-day median;
      ii. 23 MPN/100 mL, more than once in any 30-day period; and
      iii. 240 MPN/100 mL for any single sample.

   c. **Turbidity.** Effluent turbidity shall not exceed any of the following:

      i. An average of 2 Nephelometric Turbidity Units (NTU) within a 24-hour period;
      ii. 5 NTU more than 5 percent of the time within a 24-hour period; and
      iii. 10 NTU at any time.

## V. RECEIVING WATER LIMITATIONS

### A. Surface Water Limitations

Receiving water limitations are based on water quality objectives contained in the Basin Plan and are a required part of this Order. The discharge shall not cause the following in Harding Drain or the San Joaquin River:

1. **Bacteria**. The fecal coliform concentration, based on a minimum of not less than five samples for any 30-day period, to exceed a geometric mean of 200 MPN/100

mL, nor more than ten percent of the total number of fecal coliform samples taken during any 30-day period to exceed 400 MPN/100 mL.

2. **Biostimulatory Substances**. Water to contain biostimulatory substances which promote aquatic growths in concentrations that cause nuisance or adversely affect beneficial uses.

3. **Chemical Constituents**. Chemical constituents to be present in concentrations that adversely affect beneficial uses.

4. **Color**. Discoloration that causes nuisance or adversely affects beneficial uses.

5. **Dissolved Oxygen**: The dissolved oxygen concentration to be reduced below 7.0 mg/L at any time.

6. **Floating Material**. Floating material to be present in amounts that cause nuisance or adversely affect beneficial uses.

7. **Oil and Grease**. Oils, greases, waxes, or other materials to be present in concentrations that cause nuisance, result in a visible film or coating on the surface of the water or on objects in the water, or otherwise adversely affect beneficial uses

8. **pH**. The pH to be depressed below 6.5, raised above 8.5, nor changed by more than 0.5 units.

9. **Pesticides**:

    a. Pesticides to be present, individually or in combination, in concentrations that adversely affect beneficial uses;
    b. Pesticides to be present in bottom sediments or aquatic life in concentrations that adversely affect beneficial uses;
    c. Total identifiable persistent chlorinated hydrocarbon pesticides to be present in the water column at concentrations detectable within the accuracy of analytical methods approved by USEPA or the Executive Officer;
    d. Pesticide concentrations to exceed those allowable by applicable antidegradation policies (see State Water Board Resolution No. 68-16 and 40 CFR 131.12.);
    e. Pesticide concentrations to exceed the lowest levels technically and economically achievable;
    f. Pesticides to be present in concentration in excess of the maximum contaminant levels set forth in California Code of Regulations, Title 22, Division 4, Chapter 15; and
    g. Thiobencarb to be present in excess of 1.0 µg/L.

10. **Radioactivity**:

    a. Radionuclides to be present in concentrations that are harmful to human, plant, animal, or aquatic life nor that result in the accumulation of radionuclides in the

food web to an extent that presents a hazard to human, plant, animal, or aquatic life.

b. Radionuclides to be present in excess of the maximum contaminant levels specified in Table 4 (MCL Radioactivity) of Section 64443 of Title 22 of the California Code of Regulations.

11. **Suspended Sediments**. The suspended sediment load and suspended sediment discharge rate of surface waters to be altered in such a manner as to cause nuisance or adversely affect beneficial uses.

12. **Settleable Substances**. Substances to be present in concentrations that result in the deposition of material that causes nuisance or adversely affects beneficial uses

13. **Suspended Material**. Suspended material to be present in concentrations that cause nuisance or adversely affect beneficial uses.

14. **Taste and Odors**. Taste- or odor-producing substances to be present in concentrations that impart undesirable tastes or odors to fish flesh or other edible products of aquatic origin, or that cause nuisance, or otherwise adversely affect beneficial uses.

15. **Temperature.** The natural temperature to be increased by more than 5°F (applies to discharges to the San Joaquin River only).

16. **Toxicity**. Toxic substances to be present, individually or in combination, in concentrations that produce detrimental physiological responses in human, plant, animal, or aquatic life.

17. **Turbidity**. The turbidity to increase as follows:

    a. More than 1 Nephelometric Turbidity Unit (NTU) where natural turbidity is between 0 and 5 NTUs.
    b. More than 20 percent where natural turbidity is between 5 and 50 NTUs.
    c. More than 10 NTU where natural turbidity is between 50 and 100 NTUs.
    d. More than 10 percent where natural turbidity is greater than 100 NTUs.

## B. Groundwater Limitations

1. Release of waste constituents from any storage, treatment, or disposal component associated with the Facility shall not cause or contribute to, in combination with other sources of the waste constituents, groundwater within influence of the Facility to contain:

    a. Taste or odor-producing constituents, toxic substances, or any other constituents, in concentrations that cause nuisance or adversely affect beneficial uses;

b. Waste constituent concentrations in excess of water quality objectives or background water quality, whichever is greater; and

c. Waste constituent concentrations in excess of the concentrations specified below or background water quality, whichever is greater:

i. total coliform organisms shall not exceed 2.2 MPN/100 mL over any 7-day period.

## VI. PROVISIONS

### A. Standard Provisions

1. The Discharger shall comply with all Standard Provisions included in Attachment D of this Order.

2. The Discharger shall comply with the following provisions:

a. If the Discharger's wastewater treatment plant is publicly owned or subject to regulation by California Public Utilities Commission, it shall be supervised and operated by persons possessing certificates of appropriate grade according to Title 23, CCR, Division 3, Chapter 26.

b. After notice and opportunity for a hearing, this Order may be terminated or modified for cause, including, but not limited to:

i. violation of any term or condition contained in this Order;

ii. obtaining this Order by misrepresentation or by failing to disclose fully all relevant facts;

iii. a change in any condition that requires either a temporary or permanent reduction or elimination of the authorized discharge; and

iv. a material change in the character, location, or volume of discharge.

The causes for modification include:

- *New regulations.* New regulations have been promulgated under Section 405(d) of the Clean Water Act, or the standards or regulations on which the permit was based have been changed by promulgation of amended standards or regulations or by judicial decision after the permit was issued.

- *Land application plans.* When required by a permit condition to incorporate a land application plan for beneficial reuse of sewage sludge, to revise an existing land application plan, or to add a land application plan.

- *Change in sludge use or disposal practice.* Under 40 CFR 122.62(a)(1), a change in the Discharger's sludge use or disposal practice is a cause for

modification of the permit. It is cause for revocation and reissuance if the Discharger requests or agrees.

The Regional Water Board may review and revise this Order at any time upon application of any affected person or the Regional Water Board's own motion.

c. If a toxic effluent standard or prohibition (including any scheduled compliance specified in such effluent standard or prohibition) is established under Section 307(a) of the CWA, or amendments thereto, for a toxic pollutant that is present in the discharge authorized herein, and such standard or prohibition is more stringent than any limitation upon such pollutant in this Order, the Regional Water Board will revise or modify this Order in accordance with such toxic effluent standard or prohibition.

   The Discharger shall comply with effluent standards and prohibitions within the time provided in the regulations that establish those standards or prohibitions, even if this Order has not yet been modified.

d. This Order shall be modified, or alternately revoked and reissued, to comply with any applicable effluent standard or limitation issued or approved under Sections 301(b)(2)(C) and (D), 304(b)(2), and 307(a)(2) of the CWA, if the effluent standard or limitation so issued or approved:

   i. contains different conditions or is otherwise more stringent than any effluent limitation in the Order; or

   ii. controls any pollutant limited in the Order.

   The Order, as modified or reissued under this paragraph, shall also contain any other requirements of the CWA then applicable.

e. The provisions of this Order are severable. If any provision of this Order is found invalid, the remainder of this Order shall not be affected.

f. The Discharger shall take all reasonable steps to minimize any adverse effects to waters of the State or users of those waters resulting from any discharge or sludge use or disposal in violation of this Order. Reasonable steps shall include such accelerated or additional monitoring as necessary to determine the nature and impact of the non-complying discharge or sludge use or disposal.

g. The Discharger shall ensure compliance with any existing or future pretreatment standard promulgated by USEPA under Section 307 of the CWA, or amendment thereto, for any discharge to the municipal system.

h. The discharge of any radiological, chemical or biological warfare agent or high-level, radiological waste is prohibited.

i. A copy of this Order shall be maintained at the discharge facility and be available at all times to operating personnel. Key operating personnel shall be familiar with its content.

j. Safeguard to electric power failure:

   i. The Discharger shall provide safeguards to assure that, should there be reduction, loss, or failure of electric power, the discharge shall comply with the terms and conditions of this Order.

   ii. Upon written request by the Regional Water Board the Discharger shall submit a written description of safeguards. Such safeguards may include alternate power sources, standby generators, retention capacity, operating procedures, or other means. A description of the safeguards provided shall include an analysis of the frequency, duration, and impact of power failures experienced over the past 5 years on effluent quality and on the capability of the Discharger to comply with the terms and conditions of the Order. The adequacy of the safeguards is subject to the approval of the Regional Water Board.

   iii. Should the treatment works not include safeguards against reduction, loss, or failure of electric power, or should the Regional Water Board not approve the existing safeguards, the Discharger shall, within 90 days of having been advised in writing by the Regional Water Board that the existing safeguards are inadequate, provide to the Regional Water Board and USEPA a schedule of compliance for providing safeguards such that in the event of reduction, loss, or failure of electric power, the Discharger shall comply with the terms and conditions of this Order. The schedule of compliance shall, upon approval of the Regional Water Board, become a condition of this Order.

k. The Discharger, upon written request of the Regional Water Board, shall file with the Board a technical report on its preventive (failsafe) and contingency (cleanup) plans for controlling accidental discharges, and for minimizing the effect of such events. This report may be combined with that required under Regional Water Board Standard Provision VI.A.2.m.

   The technical report shall:

   i. Identify the possible sources of spills, leaks, untreated waste by-pass, and contaminated drainage. Loading and storage areas, power outage, waste treatment unit outage, and failure of process equipment, tanks and pipes should be considered.

   ii. Evaluate the effectiveness of present facilities and procedures and state when they became operational.

   iii. Predict the effectiveness of the proposed facilities and procedures and provide an implementation schedule containing interim and final dates when they will be constructed, implemented, or operational.

The Regional Water Board, after review of the technical report, may establish conditions which it deems necessary to control accidental discharges and to minimize the effects of such events. Such conditions shall be incorporated as part of this Order, upon notice to the Discharger.

l. A publicly owned treatment works (POTW) whose waste flow has been increasing, or is projected to increase, shall estimate when flows will reach hydraulic and treatment capacities of its treatment and disposal facilities. The projections shall be made in January, based on the last 3 years' average dry weather flows, peak wet weather flows and total annual flows, as appropriate. When any projection shows that capacity of any part of the facilities may be exceeded in 4 years, the Discharger shall notify the Regional Water Board by 31 January. A copy of the notification shall be sent to appropriate local elected officials, local permitting agencies and the press. Within 120 days of the notification, the Discharger shall submit a technical report showing how it will prevent flow volumes from exceeding capacity or how it will increase capacity to handle the larger flows. The Regional Water Board may extend the time for submitting the report.

m. The Discharger shall submit technical reports as directed by the Executive Officer. All technical reports required herein that involve planning, investigation, evaluation, or design, or other work requiring interpretation and proper application of engineering or geologic sciences, shall be prepared by or under the direction of persons registered to practice in California pursuant to California Business and Professions Code, sections 6735, 7835, and 7835.1. To demonstrate compliance with Title 16, CCR, sections 415 and 3065, all technical reports must contain a statement of the qualifications of the responsible registered professional(s). As required by these laws, completed technical reports must bear the signature(s) and seal(s) of the registered professional(s) in a manner such that all work can be clearly attributed to the professional responsible for the work.

n. Laboratories that perform sample analyses must be identified in all monitoring reports submitted to the Regional Water Board and USEPA.

o. The Discharger shall conduct analysis on any sample provided by USEPA as part of the Discharge Monitoring Quality Assurance (DMQA) program. The results of any such analysis shall be submitted to USEPA's DMQA manager.

p. Effluent samples shall be taken downstream of the last addition of wastes to the treatment or discharge works where a representative sample may be obtained prior to mixing with the receiving waters. Samples shall be collected at such a point and in such a manner to ensure a representative sample of the discharge.

q. All monitoring and analysis instruments and devices used by the Discharger to fulfill the prescribed monitoring program shall be properly maintained and calibrated as necessary, at least yearly, to ensure their continued accuracy.

r. The Discharger shall file with the Regional Water Board technical reports on self-monitoring performed according to the detailed specifications contained in the Monitoring and Reporting Program attached to this Order.

s. The results of all monitoring required by this Order shall be reported to the Regional Water Board, and shall be submitted in such a format as to allow direct comparison with the limitations and requirements of this Order. Unless otherwise specified, discharge flows shall be reported in terms of the monthly average and the daily maximum discharge flows.

t. The Regional Water Board is authorized to enforce the terms of this permit under several provisions of the CWC, including, but not limited to, sections 13385, 13386, and 13387.

u. For POTWs, prior to making any change in the point of discharge, place of use, or purpose of use of treated wastewater that results in a decrease of flow in any portion of a watercourse, the Discharger must file a petition with the State Water Board, Division of Water Rights, and receive approval for such a change. (CWC section 1211).

v. In the event the Discharger does not comply or will be unable to comply for any reason, with any prohibition, maximum daily effluent limitation, 1-hour average effluent limitation, or receiving water limitation contained in this Order, the Discharger shall notify the Regional Water Board by telephone (916) 464-3291 within 24 hours of having knowledge of such noncompliance, and shall confirm this notification in writing within 5 days, unless the Regional Water Board waives confirmation. The written notification shall include the information required by Attachment D, Section V.E.1 [40 CFR 122.41(l)(6)(i)].

## B. Monitoring and Reporting Program (MRP) Requirements

1. The Discharger shall comply with the MRP, and future revisions thereto, in Attachment E of this Order.

## C. Special Provisions

### 1. Reopener Provisions

a. This Order may be reopened for modification, or revocation and reissuance, as a result of the detection of a reportable priority pollutant generated by special conditions included in this Order. These special conditions may be, but are not limited to, fish tissue sampling, whole effluent toxicity, monitoring requirements on internal waste stream(s), and monitoring for surrogate parameters. Additional requirements may be included in this Order as a result of the special condition monitoring data.

b. Conditions that necessitate a major modification of a permit are described in 40 CFR 122.62, including:

   i. If new or amended applicable water quality standards are promulgated or approved pursuant to Section 303 of the CWA, or amendments thereto, this permit may be reopened and modified in accordance with the new or amended standards.

   ii. When new information, that was not available at the time of permit issuance, would have justified different permit conditions at the time of issuance.

c. **Mercury.** If mercury is found to be causing toxicity based on acute or chronic toxicity test results, or if a TMDL program is adopted, this Order may be reopened and the interim mass effluent limitation modified (higher or lower) or an effluent concentration limitation imposed. If the Regional Water Board determines that a mercury offset program is feasible for Dischargers subject to a NPDES permit, then this Order may be reopened to reevaluate the interim mercury mass loading limitation(s) and the need for a mercury offset program for the Discharger.

d. **Whole Effluent Toxicity.** As a result of a Toxicity Reduction Evaluation (TRE), this Order may be reopened to include a chronic toxicity limitation, a new acute toxicity limitation, and/or a limitation for a specific toxicant identified in the TRE. Additionally, if the State Water Board revises the SIP's toxicity control provisions that would require the establishment of numeric chronic toxicity effluent limitations, this Order may be reopened to include a numeric chronic toxicity effluent limitation based on the new provisions.

e. **Water Effects Ratios (WER) and Metal Translators.** A default WER of 1.0 has been used in this Order for calculating criteria for applicable constituents. In addition, except for the aquatic life criteria for copper, lead, and zinc, default dissolved-to-total metal translators have been used to convert water quality objectives from dissolved to total recoverable when developing effluent limitations for inorganic constituents. An acceptable WER can be used to adjust aquatic life-based water quality standards, including metals such as copper, and Basin Plan incorporated USEPA water quality standards for ammonia and

aluminum. USEPA has also promulgated an objective for copper based on the Biotic Ligand Model (BLM) that can be used as the basis for a site-specific copper effluent limitations. If the Discharger performs studies to determine site-specific WERs and/or site-specific dissolved-to-total metal translators and submits an approved report, this Order may be reopened to modify the effluent limitations for the applicable constituents.

f. **Salinity (as Electrical Conductivity).** The final effluent limitations for salinity (as electrical conductivity) are based on the salinity TMDL and Basin Plan amendment which also includes a compliance schedule of 16 to 20 years, and is not enforceable until that time. The TMDL recognizes that compliance with the final effluent limitation will require efforts beyond traditional treatment and control, including pollutant trading and supply water allocations. Therefore, this Order may be reopened to modify the effluent limitation based on new information (e.g. amendment of the Bay-Delta Plan).

g. **Dynamic Modeling.** If the Discharger submits an approved dynamic modeling analysis for constituents regulated by this Order, this Order may be reopened to modify effluent limitations for the applicable constituents.

~~h. **Compliance Schedule for Aluminum.** This Order may be reopened to include a compliance schedule to comply with final effluent limitations for aluminum based on the protection of freshwater aquatic life should additional effluent monitoring indicate that the Discharger is unable to comply with the final effluent limitations contained in section IV.B.1.a prior to commencement of the discharge to the San Joaquin River at Discharge Point No. 002.~~

~~i. **Title 22 Engineering Report.** This Order requires the Discharger to prepare a Title 22 Engineering Report that reflects its current reclamation uses and operations. Based upon the results of this report, and determinations from Department of Public Health regarding Title 22 standards, this Order may be reopened to modify the limitations or include additional requirements.~~

**2. Special Studies, Technical Reports and Additional Monitoring Requirements**

a. **Chronic Whole Effluent Toxicity.** For compliance with the Basin Plan's narrative toxicity objective, this Order requires the Discharger to conduct chronic whole effluent toxicity testing, as specified in the Monitoring and Reporting Program (Attachment E, Section V.). Furthermore, this Provision requires the Discharger to investigate the causes of, and identify corrective actions to reduce or eliminate effluent toxicity. If the discharge exceeds the toxicity numeric monitoring trigger established in this Provision, the Discharger is required to initiate a Toxicity Reduction Evaluation (TRE), in accordance with an approved TRE Work Plan, and take actions to mitigate the impact of the discharge and prevent reoccurrence of toxicity. A TRE is a site-specific study conducted in a stepwise process to identify the source(s) of toxicity and the effective control measures for effluent toxicity. TREs are designed to identify the causative agents and sources of whole effluent toxicity, evaluate the effectiveness of the

toxicity control options, and confirm the reduction in effluent toxicity. This Provision includes requirements for the Discharger to develop and submit a TRE Work Plan and includes procedures for accelerated chronic toxicity monitoring and TRE initiation.

i. **Toxicity Reduction Evaluation (TRE) Work Plan. Within 90 days of the effective date of this Order,** the Discharger shall submit to the Regional Water Board a TRE Work Plan for approval by the Executive Officer. The TRE Work Plan shall outline the procedures for identifying the source(s) of, and reducing or eliminating effluent toxicity. The TRE Work Plan must be developed in accordance with USEPA guidance[3] and be of adequate detail to allow the Discharger to immediately initiate a TRE as required in this Provision.

ii. **Accelerated Monitoring and TRE Initiation.** When the numeric toxicity monitoring trigger is exceeded during regular chronic toxicity monitoring, and the testing meets all test acceptability criteria, the Discharger shall initiate accelerated monitoring as required in the Accelerated Monitoring Specifications. WET testing results exceeding the monitoring trigger during accelerated monitoring demonstrates a pattern of toxicity and requires the Discharger to initiate a TRE to address the effluent toxicity.

iii. **Numeric Monitoring Trigger.** The numeric toxicity monitoring trigger is > **1 TUc** (where TUc = 100/NOEC). The monitoring trigger is not an effluent limitation; it is the toxicity threshold at which the Discharger is required to begin accelerated monitoring and initiate a TRE.

iv. **Accelerated Monitoring Specifications.** If the monitoring trigger is exceeded during regular chronic toxicity testing, within 14 days of notification by the laboratory of the test results, the Discharger shall initiate accelerated monitoring. Accelerated monitoring shall consist of four (4) chronic toxicity tests in a 6-week period (i.e., one test every 2 weeks) using the species that exhibited toxicity. The following protocol shall be used for accelerated monitoring and TRE initiation:

a) If the results of four (4) consecutive accelerated monitoring tests do not exceed the monitoring trigger, the Discharger may cease accelerated monitoring and resume regular chronic toxicity monitoring. However, notwithstanding the accelerated monitoring results, if there is adequate evidence of a pattern of effluent toxicity, the Executive Officer may require that the Discharger initiate a TRE.

b) If the source(s) of the toxicity is easily identified (i.e., temporary plant upset), the Discharger shall make necessary corrections to the facility and shall continue accelerated monitoring until four (4) consecutive accelerated tests do not exceed the monitoring trigger. Upon confirmation

[3] See Attachment F (Fact Sheet) Section VII.B.2.a. for a list of EPA guidance documents that must be considered in development of the TRE Workplan.

that the effluent toxicity has been removed, the Discharger may cease accelerated monitoring and resume regular chronic toxicity monitoring.

c) If the result of any accelerated toxicity test exceeds the monitoring trigger, the Discharger shall cease accelerated monitoring and initiate a TRE to investigate the cause(s) of, and identify corrective actions to reduce or eliminate effluent toxicity. Within thirty (30) days of notification by the laboratory of the test results exceeding the monitoring trigger during accelerated monitoring, the Discharger shall submit a TRE Action Plan to the Regional Water Board including, at minimum:

1) Specific actions the Discharger will take to investigate and identify the cause(s) of toxicity, including TRE WET monitoring schedule;

2) Specific actions the Discharger will take to mitigate the impact of the discharge and prevent the recurrence of toxicity; and

3) A schedule for these actions.

b. **Mixing Zone Study.** The Discharger shall conduct a mixing zone study following construction and operation of the outfall to the San Joaquin River to verify the results of the mixing zone study performed by the Discharger prior to adoption of this Order. A work plan and schedule for conducting the study shall be submitted to the Regional Water Board within 120 days after initiation of the discharge to the San Joaquin River. The mixing zone study shall be completed and submitted to the Regional Water Board within one year of approval of the work plan and schedule.

c. ~~**Title 22 Engineering Report.** Pursuant to Title 22 Section 60323, the Discharger shall prepare a Title 22 Engineering Report that reflects its current reclamation uses and operations. The report shall be prepared in accordance with the information listed in Department of Public Health (DPH) March 2001 document "*Guidelines for the Preparation of an Engineering Report for the Production, Distribution, and Use of Recycled Water.*" (See Attachment H of this Order). The report shall be submitted to DPH and the Regional Water Board for review and approval. The report shall be completed in conformance with the following schedule.~~

| ~~**Task**~~ | ~~**Compliance Date**~~ |
|---|---|
| ~~Submit Workplan and Time Schedule~~ | ~~No later than 6 months from effective date of permit~~ |
| ~~Submit Draft Report~~ | ~~No later than 2 years from effective date of permit~~ |
| ~~Submit Final Report~~ | ~~6 months following approval of the Draft Report~~ |

## 3. Best Management Practices and Pollution Prevention

**a. Salinity Source Control Program.** The Discharger shall develop and implement a Salinity Source Control Program and update as necessary. The Discharger shall provide annual reports demonstrating reasonable progress in the reduction

of salinity in its discharge to the San Joaquin River. The annual reports shall be submitted in accordance with the Monitoring and Reporting Program (Attachment E, Section X.D.1).

**4. Construction, Operation and Maintenance Specifications**

a. The treatment facilities shall be designed, constructed, operated, and maintained to prevent inundation or washout due to floods with a 100-year return frequency.

b. **Emergency Storage Basin Operating Requirements.** When discharges to the emergency storage basin occur, the Discharger shall ensure compliance with the following operation and maintenance requirements:

i. Objectionable odors originating at the Facility shall not be perceivable beyond the limits of the wastewater treatment and disposal areas.

ii. As a means of discerning compliance with the operating requirement contained in section VI.C.4.b.i of this Order, the dissolved oxygen content in the upper zone (1 foot) of wastewater in emergency storage basin shall not be less than 1.0 mg/L.

iii. The emergency storage basin shall not have a pH less than 6.5 or greater than 8.5 for periods of greater than 72 hours.

iv. The emergency storage basin shall be managed to prevent breeding of mosquitoes. In particular:

a) An erosion control program should assure that small coves and irregularities are not created around the perimeter of the water surface;

b) Weeds shall be minimized; and

c) Vegetation, debris, and dead algae shall not accumulate on the water surface.

v. Public contact with wastewater shall be precluded through such means as fences, signs, and other acceptable alternatives.

vi. Freeboard in the emergency storage basin shall not be less than 2 feet (measured vertically to the lowest point of overflow), except if lesser freeboard does not threaten the integrity of the emergency storage basin, no overflow of the emergency storage basin occurs, and lesser freeboard is due to direct precipitation or storm water runoff occurring as a result of annual precipitation with greater than a 100-year recurrence interval, or a storm event with an intensity greater than a 25-year, 24-hour storm event.

c. **Turbidity.** The Discharger shall operate the treatment system to insure that turbidity shall not exceed 2 NTU as a daily average; 5 NTU more than 5 percent of the time within a 24 hour period; and 10 NTU, at any time.

## 5. Special Provisions for Municipal Facilities (POTWs Only)

### a. Pretreatment Requirements

i. The Discharger shall implement its approved pretreatment program and the program shall be an enforceable condition of this Order. If the Discharger fails to perform the pretreatment functions, the Regional Water Board, the State Water Board or the U.S. Environmental Protection Agency (USEPA) may take enforcement actions against the Discharger as authorized by the CWA.

ii. The Discharger shall enforce the Pretreatment Standards promulgated under sections 307(b), 307(c), and 307(d) of the Clean Water Act. The Discharger shall perform the pretreatment functions required by 40 CFR Part 403 including, but not limited to:

a) Adopting the legal authority required by 40 CFR 403.8(f)(1);

b) Enforcing the Pretreatment Standards of 40 CFR 403.5 and 403.6;

c) Implementing procedures to ensure compliance as required by 40 CFR 403.8(f)(2); and

d) Providing funding and personnel for implementation and enforcement of the pretreatment program as required by 40 CFR 403.8(f)(3).

iii. The Discharger shall implement, as more completely set forth in 40 CFR 403.5, the necessary legal authorities, programs, and controls to ensure that the following incompatible wastes are not introduced to the treatment system, where incompatible wastes are:

a) Wastes which create a fire or explosion hazard in the treatment works;

b) Wastes which will cause corrosive structural damage to treatment works, but in no case wastes with a pH lower than 5.0, unless the works is specially designed to accommodate such wastes;

c) Solid or viscous wastes in amounts which cause obstruction to flow in sewers, or which cause other interference with proper operation or treatment works;

d) Any waste, including oxygen demanding pollutants (BOD, *etc.*), released in such volume or strength as to cause inhibition or disruption in the treatment works, and subsequent treatment process upset and loss of treatment efficiency;

e) Heat in amounts that inhibit or disrupt biological activity in the treatment works, or that raise influent temperatures above 40°C (104°F), unless the Regional Water Board approves alternate temperature limits;

f) Petroleum oil, non-biodegradable cutting oil, or products of mineral oil origin in amounts that will cause interference or pass through;

g) Pollutants which result in the presence of toxic gases, vapors, or fumes within the treatment works in a quantity that may cause acute worker health and safety problems; and:

h) Any trucked or hauled pollutants, except at points predesignated by the Discharger.

iv. The Discharger shall implement, as more completely set forth in 40 CFR 403.5, the legal authorities, programs, and controls necessary to ensure that indirect discharges do not introduce pollutants into the sewerage system that, either alone or in conjunction with a discharge or discharges from other sources:

a) Flow through the system to the receiving water in quantities or concentrations that cause a violation of this Order, or:

b) Inhibit or disrupt treatment processes, treatment system operations, or sludge processes, use, or disposal and either cause a violation of this Order or prevent sludge use or disposal in accordance with this Order.

b. **Sludge/Biosolids Discharge Specifications**

i. Collected screenings, residual sludge, biosolids, and other solids removed from liquid wastes shall be disposed of in a manner approved by the Executive Officer, and consistent with *Consolidated Regulations for Treatment, Storage, Processing, or Disposal of Solid Waste,* as set forth in Title 27, CCR, Division 2, Subdivision 1, section 20005, et seq. Removal for further treatment, disposal, or reuse at sites (i.e., landfill, composting sites, soil amendment sites) that are operated in accordance with valid waste discharge requirements issued by a Regional Water Board will satisfy these specifications.

ii. Sludge and solid waste shall be removed from screens, sumps, ponds, clarifiers, etc. as needed to ensure optimal plant performance.

iii. The treatment of sludge generated at the Facility shall be confined to the Facility property and conducted in a manner that precludes infiltration of waste constituents into soils in a mass or concentration that will violate Groundwater Limitations V.B. In addition, the storage of residual sludge, solid waste, and biosolids on Facility property shall be temporary and controlled, and contained in a manner that minimizes leachate formation and precludes

infiltration of waste constituents into soils in a mass or concentration that will violate Groundwater Limitations V.B.

iv. The use and disposal of biosolids shall comply with existing Federal and State laws and regulations, including permitting requirements and technical standards included in 40 CFR Part 503. If the State Water Board and the Regional Water Board are given the authority to implement regulations contained in 40 CFR Part 503, this Order may be reopened to incorporate appropriate time schedules and technical standards. The Discharger must comply with the standards and time schedules contained in 40 CFR Part 503 whether or not they have been incorporated into this Order.

c. **Biosolids Disposal Requirements**

i. The Discharger shall comply with the Monitoring and Reporting Program for biosolids disposal contained in Attachment E.

ii. Any proposed change in biosolids use or disposal practice from a previously approved practice shall be reported to the Executive Officer and U.S. EPA Regional Administrator at least **90 days** in advance of the change.

iii. The Discharger is encouraged to comply with the "Manual of Good Practice for Agricultural Land Application of Biosolids" developed by the California Water Environment Association.

d. **Biosolids Storage Requirements**

i. Facilities for the storage of Class B biosolids shall be located, designed and maintained to restrict public access to biosolids.

ii. Biosolids storage facilities shall be designed and maintained to prevent washout or inundation from a storm or flood with a return frequency of 100 years.

iii. Biosolids storage facilities, which contain biosolids, shall be designed and maintained to contain all storm water falling on the biosolids storage area during a rainfall year with a return frequency of 100 years.

iv. Biosolids storage facilities shall be designed, maintained and operated to minimize the generation of leachate.

e. **Collection System.** On 2 May 2006, the State Water Board adopted State Water Board Order 2006-0003, a Statewide General WDR for Sanitary Sewer Systems. The Discharger shall be subject to the requirements of Order 2006-0003 and any future revisions thereto. Order 2006-0003 requires that all public agencies that currently own or operate sanitary sewer systems apply for coverage under the General WDR.

Regardless of the coverage obtained under Order 2006-0003, the Discharger's collection system is part of the treatment system that is subject to this Order. As such, pursuant to federal regulations, the Discharger must properly operate and maintain its collection system [40 CFR 122.41(e)], report any non-compliance [40 CFR 122.41(l)(6) and (7)], and mitigate any discharge from the collection system in violation of this Order [40 CFR 122.41(d)].

**6. Other Special Provisions**

a. Wastewater shall be oxidized, coagulated, filtered, and adequately disinfected pursuant to the DPH reclamation criteria, California Code of Regulations, Title 22, Division 4, Chapter 3, (Title 22), or equivalent.

b. In the event of any change in control or ownership of land or waste discharge facilities presently owned or controlled by the Discharger, the Discharger shall notify the succeeding owner or operator of the existence of this Order by letter, a copy of which shall be immediately forwarded to the Regional Water Board.

To assume operation under this Order, the succeeding owner or operator must apply in writing to the Executive Officer requesting transfer of the Order. The request must contain the requesting entity's full legal name, the State of incorporation if a corporation, address and telephone number of the persons responsible for contact with the Regional Water Board and a statement. The statement shall comply with the signatory and certification requirements in the Federal Standard Provisions (Attachment D, Section V.B.) and state that the new owner or operator assumes full responsibility for compliance with this Order. Failure to submit the request shall be considered a discharge without requirements, a violation of the California Water Code. Transfer shall be approved or disapproved in writing by the Executive Officer.

**7. Compliance Schedules**

a. **Compliance Schedule for Final Effluent Limitations for Electrical Conductivity.** The Discharger shall comply with the following time schedule to ensure compliance with the final effluent limitations for electrical conductivity (Effluent Limitations IV.A.1.h and IV.B.1.h), in accordance with the Salinity and Boron TMDL:

| Task | Compliance Date |
|---|---|
| i. ~~Submit Method of Compliance Workplan/schedule~~Submit Source Control Workplan[1] | 1 June ~~April~~ 2010 |
| ii. Submit Treatment or Alternative Salinity Reduction Method Workplan[2] | 1 June 2015 |
| iii. Continue Implementation of Salinity Source Control Program[3]~~[1]~~ | Ongoing |
| iv~~ii~~. Annual Progress ~~Reports~~[2]Reports[4] | 1 ~~October~~June, annually until final compliance |
| ~~i~~v. Full compliance with final electrical conductivity effluent limitations | ~~1 October 2017~~[3]~~,~~28 July 2022 (all water year types, except critically dry) or 28 July 2026 (critically dry years) |

[1] Source control efforts must be implemented such that evaluation of effectiveness can occur no later than 1 January 2015.

[2] This workplan shall detail any necessary additional efforts (e.g., increased treatment or alternative methods of salinity reduction) the Discharger must undertake to ensure compliance if source control efforts do not result in achievement of final effluent limitations.

~~[1]~~[3] See section VI.C.3.a.

~~[4]~~[2] The progress reports shall detail what steps have been implemented towards achieving compliance with waste discharge requirements, including studies, construction progress, evaluation of measures implemented, and recommendations for additional measures as necessary to achieve full compliance by the final date.

~~[3] Discharger is initially granted 8 years to achieve compliance with final electrical conductivity effluent limitations. Progress towards compliance with final limitations shall be reviewed with each Permit renewal, and additional time may be granted up to the maximum time allowed by the TMDL. The TMDL does not require compliance until 28 July 2022 for all water year types, except critically dry. For critically dry years, full compliance not required until 28 July 2026.~~

## VII. COMPLIANCE DETERMINATION

Compliance with the effluent limitations contained in section IV of this Order will be determined as specified below:

A. **$BOD_5$ and TSS Effluent Limitations**. Compliance with the final effluent limitations for $BOD_5$ and TSS required in sections IV.A.1.a shall be ascertained by 24-hour composite samples. Compliance with effluent limitations IV.A.1.b for percent removal shall be calculated using the arithmetic mean of $BOD_5$ and TSS in effluent samples collected over a monthly period as a percentage of the arithmetic mean of the values for influent samples collected at approximately the same times during the same period.

B. **Aluminum Effluent Limitations**. Compliance with the final effluent limitations for aluminum can be demonstrated using either total or acid-soluble (inductively coupled plasma/atomic emission spectrometry or inductively coupled plasma/mass spectrometry) analysis methods, as supported by USEPA's Ambient Water Quality Criteria for Aluminum document (EPA 440/5-86-008), or other standard methods that exclude aluminum silicate particles as approved by the Executive Officer.

C. **Total Mercury Mass Loading Effluent Limitations.** The procedures for calculating the annual mass loading of total mercury are as follows:

   1. The total pollutant mass load for each year (January 1st – December 31st) shall be determined using an average of all concentration data collected during the year and the corresponding total annual discharge flow. All effluent monitoring data collected under the monitoring and reporting program, pretreatment program, and any special studies shall be used for these calculations.

   2. In calculating compliance, the Discharger shall count all non-detect measures at one-half of the detection level. If compliance with the effluent limitation is not attained due to the non-detect contribution, the Discharger shall improve and implement available analytical capabilities and compliance shall be evaluated with consideration of the detection limits.

D. **Average Dry Weather Flow Effluent Limitations**. The average dry weather flow is intended to represent the daily average flow when groundwater is at or near normal and runoff is not occurring. Compliance with the average dry weather flow effluent limitations will be determined annually based on the average daily flow over 3 consecutive dry weather months (i.e., July, August, and September).

E. **Total Coliform Organisms Effluent Limitations.** For each day that an effluent sample is collected and analyzed for total coliform organisms, the 7-day median shall be determined by calculating the median concentration of total coliform bacteria in the effluent utilizing the bacteriological results of the last 7 days for which analyses have been completed. If the 7-day median of total coliform organisms exceeds a most probable number (MPN) of 2.2 per 100 milliliters, the Discharger will be considered out of compliance for that parameter for that 1 day only within the reporting period.

F. **Total Residual Chlorine Effluent Limitations.** Continuous monitoring analyzers for chlorine residual or for dechlorination agent residual in the effluent are appropriate

methods for compliance determination. A positive residual dechlorination agent in the effluent indicates that chlorine is not present in the discharge, which demonstrates compliance with the effluent limitations. This type of monitoring can also be used to prove that some chlorine residual exceedances are false positives. Continuous monitoring data showing either a positive dechlorination agent residual or a chlorine residual at or below the prescribed limit are sufficient to show compliance with the total residual chlorine effluent limitations, as long as the instruments are maintained and calibrated in accordance with the manufacturer's recommendations.

Any excursion above the 1-hour average or 4-day average total residual chlorine effluent limitations is a violation. If the Discharger conducts continuous monitoring and the Discharger can demonstrate, through data collected from a back-up monitoring system, that a chlorine spike recorded by the continuous monitor was not actually due to chlorine, then any excursion resulting from the recorded spike will not be considered an exceedance, but rather reported as a false positive.

G. **Chronic Whole Effluent Toxicity Effluent Limitation.** Compliance with the accelerated monitoring and TRE/TIE provisions of Provision VI.C.2.a shall constitute compliance with effluent limitations contained in sections IV.A.1.d and IV.B.1.d of this Order for chronic whole effluent toxicity.

H. **Annual Average Effluent Limitations.** Annual average effluent constituent concentrations for determining compliance with the annual average effluent limitations for iron, manganese, aluminum, and salinity shall be performed as the average value of each averaging period required in the Monitoring and Reporting Program. For example, if quarterly effluent monitoring is required, the annual average would be the average of the four quarterly averages. Each quarterly average would be the average of the verified results during that calendar quarter.

## ATTACHMENT A – DEFINITIONS

**Arithmetic Mean (μ),** also called the average, is the sum of measured values divided by the number of samples. For ambient water concentrations, the arithmetic mean is calculated as follows:

Arithmetic mean = $\mu = \Sigma x / n$ where: $\Sigma x$ is the sum of the measured ambient water concentrations, and n is the number of samples.

**Average Monthly Effluent Limitation (AMEL):** the highest allowable average of daily discharges over a calendar month, calculated as the sum of all daily discharges measured during a calendar month divided by the number of daily discharges measured during that month.

**Average Weekly Effluent Limitation (AWEL):** the highest allowable average of daily discharges over a calendar week (Sunday through Saturday), calculated as the sum of all daily discharges measured during a calendar week divided by the number of daily discharges measured during that week.

**Best Practicable Treatment or Control (BPTC):** BPTC is a requirement of State Water Resources Control Board Resolution 68-16 – "Statement of Policy with Respect to Maintaining High Quality of Waters in California" (referred to as the "Antidegradation Policy"). BPTC is the treatment or control of a discharge necessary to assure that, *"(a) a pollution or nuisance will not occur and (b) the highest water quality consistent with maximum benefit to the people of the State will be maintained."* Pollution is defined in CWC Section 13050(l). In general, an exceedance of a water quality objective in the Basin Plan constitutes "pollution".

**Bioaccumulative** pollutants are those substances taken up by an organism from its surrounding medium through gill membranes, epithelial tissue, or from food and subsequently concentrated and retained in the body of the organism.

**Biosolids** is sewage sludge that has been treated and tested and shown to be capable of being beneficially and legally used as a soil amendment for agriculture, silviculture, horticulture, and land reclamation activities as specified under 40 CFR Part 503.

**Carcinogenic** pollutants are substances that are known to cause cancer in living organisms.

**Coefficient of Variation (*CV*)** is a measure of the data variability and is calculated as the estimated standard deviation divided by the arithmetic mean of the observed values.

**Daily Discharge:** Daily Discharge is defined as either: (1) the total mass of the constituent discharged over the calendar day (12:00 am through 11:59 pm) or any 24-hour period that reasonably represents a calendar day for purposes of sampling (as specified in the permit), for a constituent with limitations expressed in units of mass or; (2) the unweighted arithmetic mean measurement of the constituent over the day for a constituent with limitations expressed in other units of measurement (e.g., concentration).

The daily discharge may be determined by the analytical results of a composite sample taken over the course of one day (a calendar day or other 24-hour period defined as a day) or by the arithmetic mean of analytical results from one or more grab samples taken over the course of the day.

For composite sampling, if 1 day is defined as a 24-hour period other than a calendar day, the analytical result for the 24-hour period will be considered as the result for the calendar day in which the 24-hour period ends.

**Detected, but Not Quantified (DNQ)** are those sample results less than the RL, but greater than or equal to the laboratory's MDL.

**Dilution Credit** is the amount of dilution granted to a discharge in the calculation of a water quality-based effluent limitation, based on the allowance of a specified mixing zone. It is calculated from the dilution ratio or determined through conducting a mixing zone study or modeling of the discharge and receiving water.

**Effluent Concentration Allowance (ECA)** is a value derived from the water quality criterion/objective, dilution credit, and ambient background concentration that is used, in conjunction with the coefficient of variation for the effluent monitoring data, to calculate a long-term average (LTA) discharge concentration. The ECA has the same meaning as waste load allocation (WLA) as used in U.S. EPA guidance (Technical Support Document For Water Quality-based Toxics Control, March 1991, second printing, EPA/505/2-90-001).

**Enclosed Bays** means indentations along the coast that enclose an area of oceanic water within distinct headlands or harbor works. Enclosed bays include all bays where the narrowest distance between the headlands or outermost harbor works is less than 75 percent of the greatest dimension of the enclosed portion of the bay. Enclosed bays include, but are not limited to, Humboldt Bay, Bodega Harbor, Tomales Bay, Drake's Estero, San Francisco Bay, Morro Bay, Los Angeles-Long Beach Harbor, Upper and Lower Newport Bay, Mission Bay, and San Diego Bay. Enclosed bays do not include inland surface waters or ocean waters.

**Estimated Chemical Concentration** is the estimated chemical concentration that results from the confirmed detection of the substance by the analytical method below the ML value.

**Estuaries** means waters, including coastal lagoons, located at the mouths of streams that serve as areas of mixing for fresh and ocean waters. Coastal lagoons and mouths of streams that are temporarily separated from the ocean by sandbars shall be considered estuaries. Estuarine waters shall be considered to extend from a bay or the open ocean to a point upstream where there is no significant mixing of fresh water and seawater. Estuarine waters include~~d~~, but are not limited to, the Sacramento-San Joaquin Delta, as defined in Water Code section 12220, Suisun Bay, Carquinez Strait downstream to the Carquinez Bridge, and appropriate areas of the Smith, Mad, Eel, Noyo, Russian, Klamath, San Diego, and Otay rivers. Estuaries do not include inland surface waters or ocean waters.

**Inland Surface Waters** are all surface waters of the State that do not include the ocean,

enclosed bays, or estuaries.

**Instantaneous Maximum Effluent Limitation:** the highest allowable value for any single grab sample or aliquot (i.e., each grab sample or aliquot is independently compared to the instantaneous maximum limitation).

**Instantaneous Minimum Effluent Limitation:** the lowest allowable value for any single grab sample or aliquot (i.e., each grab sample or aliquot is independently compared to the instantaneous minimum limitation).

**Maximum Daily Effluent Limitation (MDEL)** means the highest allowable daily discharge of a pollutant, over a calendar day (or 24-hour period). For pollutants with limitations expressed in units of mass, the daily discharge is calculated as the total mass of the pollutant discharged over the day. For pollutants with limitations expressed in other units of measurement, the daily discharge is calculated as the arithmetic mean measurement of the pollutant over the day.

**Median** is the middle measurement in a set of data. The median of a set of data is found by first arranging the measurements in order of magnitude (either increasing or decreasing order). If the number of measurements ($n$) is odd, then the median = $X_{(n+1)/2}$. If $n$ is even, then the median = $(X_{n/2} + X_{(n/2)+1})/2$ (i.e., the midpoint between the $n/2$ and $n/2+1$).

**Method Detection Limit (MDL)** is the minimum concentration of a substance that can be measured and reported with 99 percent confidence that the analyte concentration is greater than zero, as defined in title 40 of the Code of Federal Regulations, Part 136, Attachment B, revised as of July 3, 1999.

**Minimum Level (ML)** is the concentration at which the entire analytical system must give a recognizable signal and acceptable calibration point. The ML is the concentration in a sample that is equivalent to the concentration of the lowest calibration standard analyzed by a specific analytical procedure, assuming that all the method specified sample weights, volumes, and processing steps have been followed.

**Mixing Zone** is a limited volume of receiving water that is allocated for mixing with a wastewater discharge where water quality criteria can be exceeded without causing adverse effects to the overall water body.

**Not Detected (ND)** are those sample results less than the laboratory's MDL.

**Ocean Waters** are the territorial marine waters of the State as defined by California law to the extent these waters are outside of enclosed bays, estuaries, and coastal lagoons. Discharges to ocean waters are regulated in accordance with the State Water Board's California Ocean Plan.

**Persistent** pollutants are substances for which degradation or decomposition in the environment is nonexistent or very slow.

**Pollutant Minimization Program (PMP)** means waste minimization and pollution prevention actions that include, but are not limited to, product substitution, waste stream recycling, alternative waste management methods, and education of the public and businesses. The goal of the PMP shall be to reduce all potential sources of a priority pollutant(s) through pollutant minimization (control) strategies, including pollution prevention measures as appropriate, to maintain the effluent concentration at or below the water quality-based effluent limitation. Pollution prevention measures may be particularly appropriate for persistent bioaccumulative priority pollutants where there is evidence that beneficial uses are being impacted. The Regional Water Board may consider cost effectiveness when establishing the requirements of a PMP. The completion and implementation of a Pollution Prevention Plan, if required pursuant to Water Code section 13263.3(d), shall be considered to fulfill the PMP requirements.

**Pollution Prevention** means any action that causes a net reduction in the use or generation of a hazardous substance or other pollutant that is discharged into water and includes, but is not limited to, input change, operational improvement, production process change, and product reformulation (as defined in Water Code section 13263.3). Pollution prevention does not include actions that merely shift a pollutant in wastewater from one environmental medium to another environmental medium, unless clear environmental benefits of such an approach are identified to the satisfaction of the State or Regional Water Board.

**Reporting Level (RL)** is the ML (and its associated analytical method) chosen by the Discharger for reporting and compliance determination from the MLs included in this Order. The MLs included in this Order correspond to approved analytical methods for reporting a sample result that are selected by the Regional Water Board either from Appendix 4 of the SIP in accordance with section 2.4.2 of the SIP or established in accordance with section 2.4.3 of the SIP. The ML is based on the proper application of method-based analytical procedures for sample preparation and the absence of any matrix interferences. Other factors may be applied to the ML depending on the specific sample preparation steps employed. For example, the treatment typically applied in cases where there are matrix-effects is to dilute the sample or sample aliquot by a factor of ten. In such cases, this additional factor must be applied to the ML in the computation of the RL.

**Satellite Collection System** is the portion, if any, of a sanitary sewer system owned or operated by a different public agency than the agency that owns and operates the wastewater treatment facility that a sanitary sewer system is tributary to.

**Source of Drinking Water** is any water designated as municipal or domestic supply (MUN) in a Regional Water Board Basin Plan.

**Sewage Sludge** is the solid, semisolid, or liquid residue generated during the treatment of domestic sewage in a municipal wastewater treatment facility. Sewage sludge includes solids removed or used during primary, secondary, or advanced wastewater treatment processes. Sewage sludge does not include grit or screening material generated during preliminary treatment of domestic sewage at a municipal wastewater treatment facility.

**Standard Deviation (σ)** is a measure of variability that is calculated as follows:

$$\sigma = (\sum[(x - \mu)^2]/(n - 1))^{0.5}$$

where:

x is the observed value;
μ is the arithmetic mean of the observed values; and
n is the number of samples.

**Toxicity Reduction Evaluation (TRE)** is a study conducted in a step-wise process designed to identify the causative agents of effluent or ambient toxicity, isolate the sources of toxicity, evaluate the effectiveness of toxicity control options, and then confirm the reduction in toxicity. The first steps of the TRE consist of the collection of data relevant to the toxicity, including additional toxicity testing, and an evaluation of facility operations and maintenance practices, and best management practices. A Toxicity Identification Evaluation (TIE) may be required as part of the TRE, if appropriate. (A TIE is a set of procedures to identify the specific chemical(s) responsible for toxicity. These procedures are performed in three phases (characterization, identification, and confirmation) using aquatic organism toxicity tests.)

## ATTACHMENT B – MAP

SITE LOCATION MAP

CITY OF TURLOCK
WATER QUALITY CONTROL FACILITY
STANISLAUS COUNTY

## ATTACHMENT C – FLOW SCHEMATIC

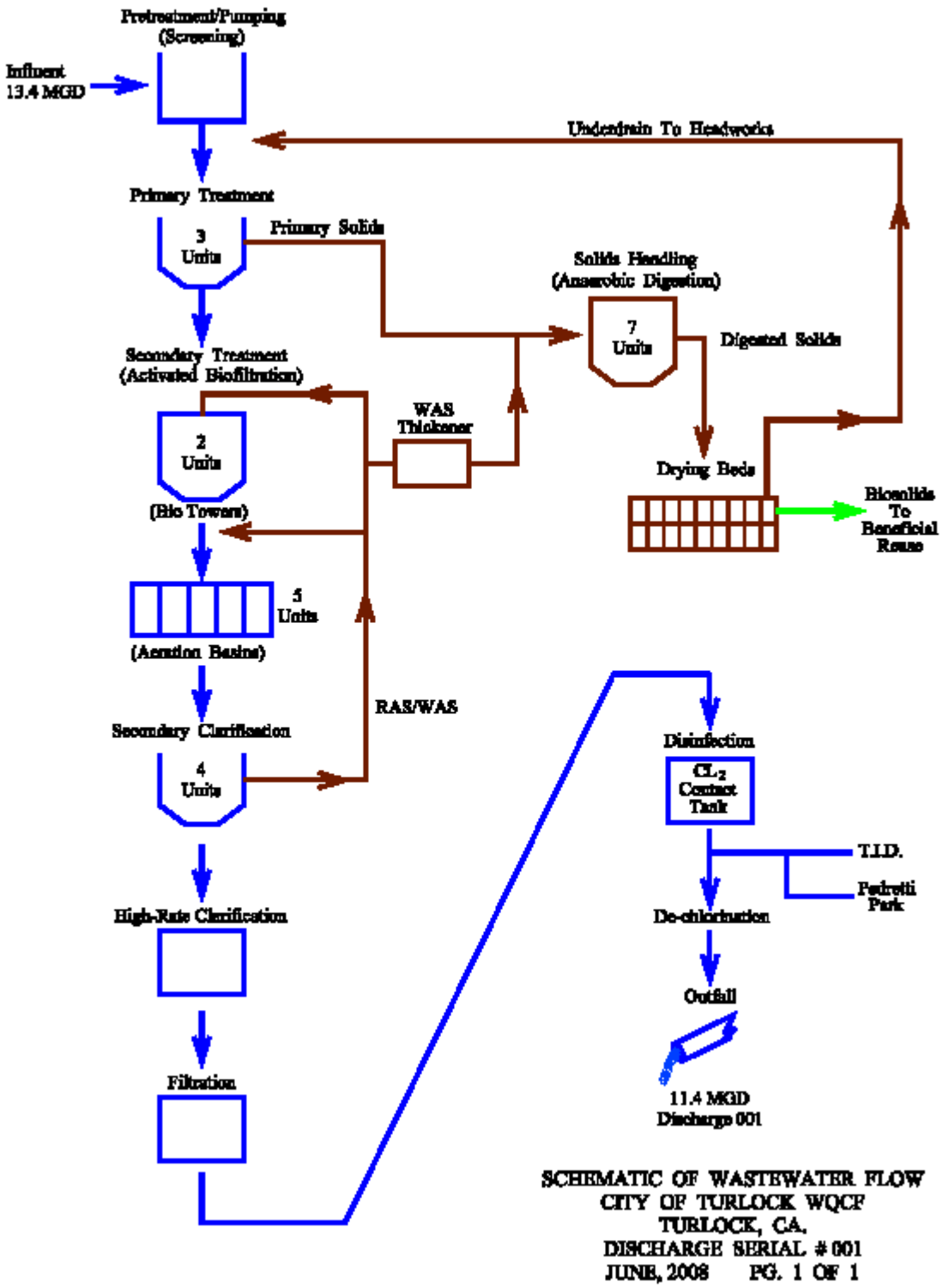

# ATTACHMENT D –STANDARD PROVISIONS

## I. STANDARD PROVISIONS – PERMIT COMPLIANCE

### A. Duty to Comply

1. The Discharger must comply with all of the conditions of this Order. Any noncompliance constitutes a violation of the Clean Water Act (CWA) and the California Water Code and is grounds for enforcement action, for permit termination, revocation and reissuance, or modification; or denial of a permit renewal application. (40 CFR 122.41(a).)

2. The Discharger shall comply with effluent standards or prohibitions established under Section 307(a) of the CWA for toxic pollutants and with standards for sewage sludge use or disposal established under Section 405(d) of the CWA within the time provided in the regulations that establish these standards or prohibitions, even if this Order has not yet been modified to incorporate the requirement. (40 CFR 122.41(a)(1).)

### B. Need to Halt or Reduce Activity Not a Defense

It shall not be a defense for a Discharger in an enforcement action that it would have been necessary to halt or reduce the permitted activity in order to maintain compliance with the conditions of this Order. (40 CFR 122.41(c).)

### C. Duty to Mitigate

The Discharger shall take all reasonable steps to minimize or prevent any discharge or sludge use or disposal in violation of this Order that has a reasonable likelihood of adversely affecting human health or the environment. (40 CFR 122.41(d).)

### D. Proper Operation and Maintenance

The Discharger shall at all times properly operate and maintain all facilities and systems of treatment and control (and related appurtenances) which are installed or used by the Discharger to achieve compliance with the conditions of this Order. Proper operation and maintenance also includes adequate laboratory controls and appropriate quality assurance procedures. This provision requires the operation of backup or auxiliary facilities or similar systems that are installed by a Discharger only when necessary to achieve compliance with the conditions of this Order. (40 CFR 122.41(e).)

### E. Property Rights

1. This Order does not convey any property rights of any sort or any exclusive privileges. (40 CFR 122.41(g).)

2. The issuance of this Order does not authorize any injury to persons or property or invasion of other private rights, or any infringement of state or local law or regulations. (40 CFR 122.5(c).)

## F. Inspection and Entry

The Discharger shall allow the Regional Water Board, State Water Board, United States Environmental Protection Agency (USEPA), and/or their authorized representatives (including an authorized contractor acting as their representative), upon the presentation of credentials and other documents, as may be required by law, to (40 CFR 122.41(i); Wat. Code, § 13383):

1. Enter upon the Discharger's premises where a regulated facility or activity is located or conducted, or where records are kept under the conditions of this Order (40 CFR 122.41(i)(1));

2. Have access to and copy, at reasonable times, any records that must be kept under the conditions of this Order (40 CFR 122.41(i)(2));

3. Inspect and photograph, at reasonable times, any facilities, equipment (including monitoring and control equipment), practices, or operations regulated or required under this Order (40 CFR 122.41(i)(3)); and

4. Sample or monitor, at reasonable times, for the purposes of assuring Order compliance or as otherwise authorized by the CWA or the Water Code, any substances or parameters at any location. (40 CFR 122.41(i)(4).)

## G. Bypass

1. Definitions

   a. “Bypass” means the intentional diversion of waste streams from any portion of a treatment facility. (40 CFR 122.41(m)(1)(i).)

   b. “Severe property damage” means substantial physical damage to property, damage to the treatment facilities, which causes them to become inoperable, or substantial and permanent loss of natural resources that can reasonably be expected to occur in the absence of a bypass. Severe property damage does not mean economic loss caused by delays in production. (40 CFR 122.41(m)(1)(ii).)

2. Bypass not exceeding limitations. The Discharger may allow any bypass to occur which does not cause exceedances of effluent limitations, but only if it is for essential maintenance to assure efficient operation. These bypasses are not subject to the provisions listed in Standard Provisions – Permit Compliance I.G.3, I.G.4, and I.G.5 below. (40 CFR 122.41(m)(2).)

3. Prohibition of bypass. Bypass is prohibited, and the Regional Water Board may take enforcement action against a Discharger for bypass, unless (40 CFR 122.41(m)(4)(i)):

    a. Bypass was unavoidable to prevent loss of life, personal injury, or severe property damage (40 CFR 122.41(m)(4)(i)(A));

    b. There were no feasible alternatives to the bypass, such as the use of auxiliary treatment facilities, retention of untreated wastes, or maintenance during normal periods of equipment downtime. This condition is not satisfied if adequate back-up equipment should have been installed in the exercise of reasonable engineering judgment to prevent a bypass that occurred during normal periods of equipment downtime or preventive maintenance (40 CFR 122.41(m)(4)(i)(B)); and

    c. The Discharger submitted notice to the Regional Water Board as required under Standard Provisions – Permit Compliance I.G.5 below. (40 CFR 122.41(m)(4)(i)(C).)

4. The Regional Water Board may approve an anticipated bypass, after considering its adverse effects, if the Regional Water Board determines that it will meet the three conditions listed in Standard Provisions – Permit Compliance I.G.3 above. (40 CFR 122.41(m)(4)(ii).)

5. Notice

    a. Anticipated bypass. If the Discharger knows in advance of the need for a bypass, it shall submit a notice, if possible at least 10 days before the date of the bypass. (40 CFR 122.41(m)(3)(i).)

    b. Unanticipated bypass. The Discharger shall submit notice of an unanticipated bypass as required in Standard Provisions - Reporting V.E below (24-hour notice). (40 CFR 122.41(m)(3)(ii).)

## H. Upset

Upset means an exceptional incident in which there is unintentional and temporary noncompliance with technology based permit effluent limitations because of factors beyond the reasonable control of the Discharger. An upset does not include noncompliance to the extent caused by operational error, improperly designed treatment facilities, inadequate treatment facilities, lack of preventive maintenance, or careless or improper operation. (40 CFR 122.41(n)(1).)

1. Effect of an upset. An upset constitutes an affirmative defense to an action brought for noncompliance with such technology based permit effluent limitations if the requirements of Standard Provisions – Permit Compliance I.H.2 below are met. No determination made during administrative review of claims that noncompliance was

caused by upset, and before an action for noncompliance, is final administrative action subject to judicial review. (40 CFR 122.41(n)(2).).

2. Conditions necessary for a demonstration of upset. A Discharger who wishes to establish the affirmative defense of upset shall demonstrate, through properly signed, contemporaneous operating logs or other relevant evidence that (40 CFR 122.41(n)(3)):

   a. An upset occurred and that the Discharger can identify the cause(s) of the upset (40 CFR 122.41(n)(3)(i));

   b. The permitted facility was, at the time, being properly operated (40 CFR 122.41(n)(3)(ii));

   c. The Discharger submitted notice of the upset as required in Standard Provisions – Reporting V.E.2.b below (24-hour notice) (40 CFR 122.41(n)(3)(iii)); and

   d. The Discharger complied with any remedial measures required under Standard Provisions – Permit Compliance I.C above. (40 CFR 122.41(n)(3)(iv).)

3. Burden of proof. In any enforcement proceeding, the Discharger seeking to establish the occurrence of an upset has the burden of proof. (40 CFR 122.41(n)(4).)

## II. STANDARD PROVISIONS – PERMIT ACTION

### A. General

This Order may be modified, revoked and reissued, or terminated for cause. The filing of a request by the Discharger for modification, revocation and reissuance, or termination, or a notification of planned changes or anticipated noncompliance does not stay any Order condition. (40 CFR 122.41(f).)

### B. Duty to Reapply

If the Discharger wishes to continue an activity regulated by this Order after the expiration date of this Order, the Discharger must apply for and obtain a new permit. (40 CFR 122.41(b).)

### C. Transfers

This Order is not transferable to any person except after notice to the Regional Water Board. The Regional Water Board may require modification or revocation and reissuance of the Order to change the name of the Discharger and incorporate such other requirements as may be necessary under the CWA and the Water Code. (40 CFR 122.41(l)(3); 122.61.)

## III. STANDARD PROVISIONS – MONITORING

**A.** Samples and measurements taken for the purpose of monitoring shall be representative of the monitored activity. (40 CFR 122.41(j)(1).)

**B.** Monitoring results must be conducted according to test procedures under 40 CFR Part 136 or, in the case of sludge use or disposal, approved under 40 CFR Part 136 unless otherwise specified in 40 CFR Part 503 unless other test procedures have been specified in this Order. (40 CFR 122.41(j)(4); 122.44(i)(1)(iv).)

## IV. STANDARD PROVISIONS – RECORDS

**A.** Except for records of monitoring information required by this Order related to the Discharger's sewage sludge use and disposal activities, which shall be retained for a period of at least 5 years (or longer as required by 40 CFR Part 503), the Discharger shall retain records of all monitoring information, including all calibration and maintenance records and all original strip chart recordings for continuous monitoring instrumentation, copies of all reports required by this Order, and records of all data used to complete the application for this Order, for a period of at least three (3) years from the date of the sample, measurement, report or application. This period may be extended by request of the Regional Water Board Executive Officer at any time. (40 CFR 122.41(j)(2).)

**B. Records of monitoring information shall include:**

1. The date, exact place, and time of sampling or measurements (40 CFR 122.41(j)(3)(i));

2. The individual(s) who performed the sampling or measurements (40 CFR 122.41(j)(3)(ii));

3. The date(s) analyses were performed (40 CFR 122.41(j)(3)(iii));

4. The individual(s) who performed the analyses (40 CFR 122.41(j)(3)(iv));

5. The analytical techniques or methods used (40 CFR 122.41(j)(3)(v)); and

6. The results of such analyses. (40 CFR 122.41(j)(3)(vi).)

**C. Claims of confidentiality for the following information will be denied (40 CFR 122.7(b)):**

1. The name and address of any permit applicant or Discharger (40 CFR 122.7(b)(1)); and

2. Permit applications and attachments, permits and effluent data. (40 CFR 122.7(b)(2).)

## V. STANDARD PROVISIONS – REPORTING

### A. Duty to Provide Information

The Discharger shall furnish to the Regional Water Board, State Water Board, or USEPA within a reasonable time, any information which the Regional Water Board, State Water Board, or USEPA may request to determine whether cause exists for modifying, revoking and reissuing, or terminating this Order or to determine compliance with this Order. Upon request, the Discharger shall also furnish to the Regional Water Board, State Water Board, or USEPA copies of records required to be kept by this Order. (40 CFR 122.41(h); Wat. Code, § 13267.)

### B. Signatory and Certification Requirements

1. All applications, reports, or information submitted to the Regional Water Board, State Water Board, and/or USEPA shall be signed and certified in accordance with Standard Provisions – Reporting V.B.2, V.B.3, V.B.4, and V.B.5 below. (40 CFR 122.41(k).)

2. All permit applications shall be signed by either a principal executive officer or ranking elected official. For purposes of this provision, a principal executive officer of a federal agency includes: (i) the chief executive officer of the agency, or (ii) a senior executive officer having responsibility for the overall operations of a principal geographic unit of the agency (e.g., Regional Administrators of USEPA). (40 CFR 122.22(a)(3).).

3. All reports required by this Order and other information requested by the Regional Water Board, State Water Board, or USEPA shall be signed by a person described in Standard Provisions – Reporting V.B.2 above, or by a duly authorized representative of that person. A person is a duly authorized representative only if:

   a. The authorization is made in writing by a person described in Standard Provisions – Reporting V.B.2 above (40 CFR 122.22(b)(1));

   b. The authorization specifies either an individual or a position having responsibility for the overall operation of the regulated facility or activity such as the position of plant manager, operator of a well or a well field, superintendent, position of equivalent responsibility, or an individual or position having overall responsibility for environmental matters for the company. (A duly authorized representative may thus be either a named individual or any individual occupying a named position.) (40 CFR 122.22(b)(2)); and

   c. The written authorization is submitted to the Regional Water Board and State Water Board. (40 CFR 122.22(b)(3).)

4. If an authorization under Standard Provisions – Reporting V.B.3 above is no longer accurate because a different individual or position has responsibility for the overall operation of the facility, a new authorization satisfying the requirements of Standard Provisions – Reporting V.B.3 above must be submitted to the Regional Water Board and State Water Board prior to or together with any reports, information, or applications, to be signed by an authorized representative. (40 CFR 122.22(c).)

5. Any person signing a document under Standard Provisions – Reporting V.B.2 or V.B.3 above shall make the following certification:

   "I certify under penalty of law that this document and all attachments were prepared under my direction or supervision in accordance with a system designed to assure that qualified personnel properly gather and evaluate the information submitted. Based on my inquiry of the person or persons who manage the system or those persons directly responsible for gathering the information, the information submitted is, to the best of my knowledge and belief, true, accurate, and complete. I am aware that there are significant penalties for submitting false information, including the possibility of fine and imprisonment for knowing violations." (40 CFR 122.22(d).)

## C. Monitoring Reports

1. Monitoring results shall be reported at the intervals specified in the Monitoring and Reporting Program (Attachment E) in this Order. (40 CFR 122.22(l)(4).)

2. Monitoring results must be reported on a Discharge Monitoring Report (DMR) form or forms provided or specified by the Regional Water Board or State Water Board for reporting results of monitoring of sludge use or disposal practices. (40 CFR 122.41(l)(4)(i).)

3. If the Discharger monitors any pollutant more frequently than required by this Order using test procedures approved under 40 CFR Part 136 or, in the case of sludge use or disposal, approved under 40 CFR Part 136 unless otherwise specified in 40 CFR Part 503, or as specified in this Order, the results of this monitoring shall be included in the calculation and reporting of the data submitted in the DMR or sludge reporting form specified by the Regional Water Board. (40 CFR 122.41(l)(4)(ii).)

4. Calculations for all limitations, which require averaging of measurements, shall utilize an arithmetic mean unless otherwise specified in this Order. (40 CFR 122.41(l)(4)(iii).)

## D. Compliance Schedules

Reports of compliance or noncompliance with, or any progress reports on, interim and final requirements contained in any compliance schedule of this Order, shall be submitted no later than 14 days following each schedule date. (40 CFR 122.41(l)(5).)

## E. Twenty-Four Hour Reporting

1. The Discharger shall report any noncompliance that may endanger health or the environment. Any information shall be provided orally within 24 hours from the time the Discharger becomes aware of the circumstances. A written submission shall also be provided within five (5) days of the time the Discharger becomes aware of the circumstances. The written submission shall contain a description of the noncompliance and its cause; the period of noncompliance, including exact dates and times, and if the noncompliance has not been corrected, the anticipated time it is expected to continue; and steps taken or planned to reduce, eliminate, and prevent reoccurrence of the noncompliance. (40 CFR 122.41(l)(6)(i).)

2. The following shall be included as information that must be reported within 24 hours under this paragraph (40 CFR 122.41(l)(6)(ii)):

   a. Any unanticipated bypass that exceeds any effluent limitation in this Order. (40 CFR 122.41(l)(6)(ii)(A).)

   b. Any upset that exceeds any effluent limitation in this Order. (40 CFR 122.41(l)(6)(ii)(B).)

3. The Regional Water Board may waive the above-required written report under this provision on a case-by-case basis if an oral report has been received within 24 hours. (40 CFR 122.41(l)(6)(iii).)

## F. Planned Changes

The Discharger shall give notice to the Regional Water Board as soon as possible of any planned physical alterations or additions to the permitted facility. Notice is required under this provision only when (40 CFR 122.41(l)(1)):

1. The alteration or addition to a permitted facility may meet one of the criteria for determining whether a facility is a new source in 40 CFR 122.29(b) (40 CFR 122.41(l)(1)(i)); or

2. The alteration or addition could significantly change the nature or increase the quantity of pollutants discharged. This notification applies to pollutants that are subject neither to effluent limitations in this Order nor to notification requirements under 40 CFR 122.42(a)(1) (see Additional Provisions—Notification Levels VII.A.1). (40 CFR 122.41(l)(1)(ii).)

3. The alteration or addition results in a significant change in the Discharger's sludge use or disposal practices, and such alteration, addition, or change may justify the application of permit conditions that are different from or absent in the existing permit, including notification of additional use or disposal sites not reported during the permit application process or not reported pursuant to an approved land application plan. (40 CFR 122.41(l)(1)(iii).)

### G. Anticipated Noncompliance

The Discharger shall give advance notice to the Regional Water Board or State Water Board of any planned changes in the permitted facility or activity that may result in noncompliance with General Order requirements. (40 CFR 122.41(l)(2).)

### H. Other Noncompliance

The Discharger shall report all instances of noncompliance not reported under Standard Provisions – Reporting V.C, V.D, and V.E above at the time monitoring reports are submitted. The reports shall contain the information listed in Standard Provision – Reporting V.E above. (40 CFR 122.41(l)(7).)

### I. Other Information

When the Discharger becomes aware that it failed to submit any relevant facts in a permit application, or submitted incorrect information in a permit application or in any report to the Regional Water Board, State Water Board, or USEPA, the Discharger shall promptly submit such facts or information. (40 CFR 122.41(l)(8).)

## VI. STANDARD PROVISIONS – ENFORCEMENT

**A.** The Regional Water Board is authorized to enforce the terms of this permit under several provisions of the Water Code, including, but not limited to, sections 13385, 13386, and 13387.

## VII. ADDITIONAL PROVISIONS – NOTIFICATION LEVELS

### A. Publicly-Owned Treatment Works (POTWs)

All POTWs shall provide adequate notice to the Regional Water Board of the following (40 CFR 122.42(b)):

1. Any new introduction of pollutants into the POTW from an indirect discharger that would be subject to sections 301 or 306 of the CWA if it were directly discharging those pollutants (40 CFR 122.42(b)(1)); and

2. Any substantial change in the volume or character of pollutants being introduced into that POTW by a source introducing pollutants into the POTW at the time of adoption of the Order. (40 CFR 122.42(b)(2).)

3. Adequate notice shall include information on the quality and quantity of effluent introduced into the POTW as well as any anticipated impact of the change on the quantity or quality of effluent to be discharged from the POTW. (40 CFR 122.42(b)(3).)

# ATTACHMENT E – MONITORING AND REPORTING PROGRAM

## Table of Contents

Attachment E – Monitoring and Reporting Program (MRP) ..... E-2
I. General Monitoring Provisions ..... E-2
II. Monitoring Locations ..... E-2
III. Influent Monitoring Requirements ..... E-3
A. Monitoring Location INF-001 ..... E-3
IV. Effluent Monitoring Requirements ..... E-4
A. Monitoring Locations EFF-001 and EFF-002 ..... E-4
V. Whole Effluent Toxicity Testing Requirements ..... E-9
VI. Land Discharge Monitoring Requirements ..... E-12
A. Monitoring Location LND-001 ..... E-12
VII. Reclamation Monitoring Requirements ..... E-12
VIII. Receiving Water Monitoring Requirements – Surface Water and Groundwater ..... E-12
A. Monitoring Locations RSW-001 through RSW-006 ..... E-12
B. Monitoring Locations GW-001 and GW-002 ..... E-16
IX. Other Monitoring Requirements ..... E-17
A. Biosolids ..... E-17
B. Municipal Water Supply ..... E-17
X. Reporting Requirements ..... E-18
A. General Monitoring and Reporting Requirements ..... E-18
B. Self Monitoring Reports (SMRs) ..... E-19
C. Discharge Monitoring Reports (DMRs) ..... E-21
D. Other Reports ..... E-22

## List of Tables

Table E-1. Monitoring Station Locations ..... E-3
Table E-2. Influent Monitoring ..... E-3
Table E-3. Effluent Monitoring ..... E-4
Table E-4. Chronic Toxicity Testing Dilution Series ..... E-10
Table E-5. Land Discharge Monitoring Requirements ..... E-12
Table E-6. Reclamation Monitoring Requirements ..... E-12
Table E-7. Receiving Water Monitoring Requirements – Monitoring Location RSW-001, RSW-002, and RSW-004 ..... E-13
Table E-8. Receiving Water Monitoring Requirements – Monitoring Location RSW-003 ..... E-13
Table E-9. Receiving Water Monitoring Requirements – Monitoring Location RSW-005 ..... E-14
Table E-10. Receiving Water Monitoring Requirements – Monitoring Location RSW-006 ..... E-15
Table E-11. Groundwater Monitoring Requirements ..... E-16
Table E-12. Municipal Water Supply Monitoring Requirements ..... E-17
Table E-13. Monitoring Periods and Reporting Schedule ..... E-20
Table E-14. Reporting Requirements for Special Provisions Progress Reports ..... E-22

## ATTACHMENT E – MONITORING AND REPORTING PROGRAM (MRP)

Title 40 of the Code of Federal Regulations section 122.48 (40 CFR 122.48) requires that all NPDES permits specify monitoring and reporting requirements. Water Code Sections 13267 and 13383 also authorize the Regional Water Quality Control Board (Regional Water Board) to require technical and monitoring reports. This MRP establishes monitoring and reporting requirements, which implement the federal and state regulations.

### I. GENERAL MONITORING PROVISIONS

A. Samples and measurements taken as required herein shall be representative of the volume and nature of the monitored discharge. All samples shall be taken at the monitoring locations specified below and, unless otherwise specified, before the monitored flow joins or is diluted by any other waste stream, body of water, or substance. Monitoring locations shall not be changed without notification to and the approval of this Regional Water Board.

B. Chemical, bacteriological, and bioassay analyses shall be conducted at a laboratory certified for such analyses by the State Department of Health Services. In the event a certified laboratory is not available to the Discharger, analyses performed by a noncertified laboratory will be accepted provided a Quality Assurance-Quality Control Program is instituted by the laboratory. A manual containing the steps followed in this program must be kept in the laboratory and shall be available for inspection by Regional Water Board staff. The Quality Assurance-Quality Control Program must conform to USEPA guidelines or to procedures approved by the Regional Water Board.

C. All analyses shall be performed in a laboratory certified to perform such analyses by the California Department of Health Services. Laboratories that perform sample analyses shall be identified in all monitoring reports.

D. Appropriate flow measurement devices and methods consistent with accepted scientific practices shall be selected and used to ensure the accuracy and reliability of measurements of the volume of monitored discharges. All monitoring instruments and devices used by the Discharger to fulfill the prescribed monitoring program shall be properly maintained and calibrated as necessary to ensure their continued accuracy. All flow measurement devices shall be calibrated at least once per year to ensure continued accuracy of the devices.

E. Monitoring results, including noncompliance, shall be reported at intervals and in a manner specified in this Monitoring and Reporting Program.

### II. MONITORING LOCATIONS

The Discharger shall establish the following monitoring locations to demonstrate compliance with the effluent limitations, discharge specifications, and other requirements in this Order:

**Table E-1. Monitoring Station Locations**

| Discharge Point Name | Monitoring Location Name | Monitoring Location Description |
|---|---|---|
| -- | INF-001 | A location where a representative sample of the influent into the Facility can be collected. |
| 001 | EFF-001 | A location where a representative sample of the effluent from the Facility can be collected after all treatment processes and prior to commingling with other waste streams or being discharged into Harding Drain. |
| 002 | EFF-002 | A location where a representative sample of the effluent from the Facility can be collected after all treatment processes and prior to commingling with other waste streams or being discharged into the San Joaquin River. |
| -- | LND-001 | A location where a representative sample of the influent being discharged into Emergency Storage Basin can be collected. |
| -- | GW-001 | Upgradient groundwater monitoring well (identified as Site #1 in the Discharger's Self-Monitoring Reports). |
| -- | GW-002 | Downgradient groundwater monitoring well (identified as Site #2 in the Discharger's Self-Monitoring Reports). |
| -- | RSW-001 | TID Lateral 5/Ceres Drain at Prairie Flower Road (above Hodges Drop). |
| -- | RSW-002 | Harding Drain 100 feet below Hodges Drop. |
| -- | RSW-003 | San Joaquin River 1,000 feet above Harding Drain. |
| -- | RSW-004 | San Joaquin River 500 feet below Harding Drain. |
| -- | RSW-005 | San Joaquin River 50 feet above Harding Drain. |
| -- | RSW-006 | San Joaquin River 9,800 feet downstream of Discharge Point No. 002. |
| -- | BIO-001 | A location where a representative sample of the biosolids can be collected. |
| 003 | REC-001 | A location where a representative sample of the effluent from the Facility can be collected after all treatment processes and prior to commingling with other waste streams or being used for reclamation at the Walnut Energy Center. |
| 004 | REC-002 | A location where a representative sample of the effluent from the Facility can be collected after all treatment processes and prior to commingling with other waste streams or being used for reclamation at the Pedretti Sports Complex. |
| -- | SPL-001 | A location where a representative sample location for the municipal water supply can be collected. If the water supply is from more than one source, a weighted average should be calculated. |

## III. INFLUENT MONITORING REQUIREMENTS

### A. Monitoring Location INF-001

1. Discharger shall monitor influent to the Facility at INF-001 as follows

**Table E-2. Influent Monitoring**

| Parameter | Units | Sample Type | Minimum Sampling Frequency | Required Analytical Test Method |
|---|---|---|---|---|
| Flow | MGD | Meter | Continuous | -- |

| Parameter | Units | Sample Type | Minimum Sampling Frequency | Required Analytical Test Method |
|---|---|---|---|---|
| ***Conventional Pollutants*** | | | | |
| Biochemical Oxygen Demand (BOD) (5-day @ 20 Deg. C) | mg/L | 24-hr Composite[1] | 1/Day | [2] |
| | lbs/day | Calculate | 1/Day | [2] |
| pH | standard units | Grab | 1/Day | [2] |
| Total Suspended Solids | mg/L | 24-hr Composite[1] | 1/Day | [2] |
| | lbs/day | Calculate | 1/Day | [2] |
| ***Priority Pollutants*** | | | | |
| Priority Pollutants | µg/L | 24-hr Composite[1,3] | 1/Year | [2] |
| ***Non-Conventional Pollutants*** | | | | |
| Electrical Conductivity @ 25°C | µmhos/cm | Grab | 1/Week | [2] |
| Total Dissolved Solids | mg/L | Grab | 1/Week | [2] |

[1] Composite samples shall be flow proportional.
[2] Pollutants shall be analyzed using the analytical methods described in 40 CFR Part 136.
[3] Volatile constituents shall be sampled in accordance with 40 CFR Part 136.

## IV. EFFLUENT MONITORING REQUIREMENTS

### A. Monitoring Locations EFF-001 and EFF-002

1. The Discharger shall monitor the tertiary treated effluent at Monitoring Location EFF-001 (for continuous and emergency discharges from Discharge Point No. 001) and at Monitoring Location EFF-002 (for discharges from Discharge Point No. 002) as follows. If more than one analytical test method is listed for a given parameter, the Discharger must select from the listed methods and corresponding Minimum Level.

**Table E-3. Effluent Monitoring**

| Parameter | Units | Sample Type | Minimum Sampling Frequency | Required Analytical Test Method |
|---|---|---|---|---|
| Flow | MGD | Meter | Continuous | -- |
| ***Conventional Pollutants*** | | | | |
| Biochemical Oxygen Demand (BOD) (5-day @ 20 Deg. C) | mg/L | 24-hr Composite[1] | 1/Day | [2] |
| | lbs/day | Calculate | 1/Day | [2] |
| pH | standard units | Meter | Continuous | [2] |
| Total Suspended Solids | mg/L | 24-hr Composite[1] | 1/Day | [2] |
| | lbs/day | Calculate | 1/Day | [2] |
| ***Priority Pollutants*** | | | | |
| Bis (2-ethylhexyl) phthalate | µg/L | Grab[3] | 1/Quarter | [2,4] |
| Carbon Tetrachloride | µg/L | Grab | 1/Month | [2,4] |

| Parameter | Units | Sample Type | Minimum Sampling Frequency | Required Analytical Test Method |
|---|---|---|---|---|
| Chlorodibromomethane | µg/L | Grab | 1/Month | 2,4 |
| Copper, Total Recoverable | µg/L | 24-hr Composite[1] | 1/Month | 2,4 |
| Copper, Dissolved | µg/L | 24-hr Composite[1] | 1/Month | 2,4 |
| Dichlorobromomethane | µg/L | Grab | 1/Month | 2,4 |
| Lead, Total Recoverable | µg/L | 24-hr Composite[1] | 1/Month[5] | 2,4 |
| Mercury, Total Recoverable | ng/L | Grab | 1/Month | 2,4,6~~5~~ |
| Selenium, Total Recoverable | µg/L | 24-hr Composite[1,7~~6~~] | 1/Month | 2,4 |
| Silver, Total Recoverable | µg/L | 24-hr Composite[1] | 1/Month | 2,4 |
| ~~Zinc, Total Recoverable~~ | ~~µg/L~~ | ~~24-hr Composite[1]~~ | ~~1/Month~~ | ~~2,4~~ |
| Priority Pollutants | µg/L | 24-hr Composite[1,8~~7~~] | 1/Month[9~~8~~] | 2,4 |
| ***Non-Conventional Pollutants*** | | | | |
| Aluminum, Total Recoverable | µg/L | 24-hr Composite[1] | 1/Month | 2,10~~9~~ |
| Ammonia Nitrogen, Total (as N) | mg/L | Grab | 1/Week[~~10,11~~11,12] | 2 |
| Boron, Total Recoverable | µg/L | 24-hr Composite[1] | 1/Month | 2 |
| Chloride | mg/L | Grab | 1/Month | 2 |
| Chlorine, Total Residual | mg/L | Meter | Continuous | 2,13~~12~~ |
| Chlorpyrifos | µg/L | 24-hr Composite[1] | 1/Quarter | 2,14~~13~~ |
| Diazinon | µg/L | 24-hr Composite[1] | 1/Quarter | 2,14~~13~~ |
| Dissolved Oxygen | mg/L | Grab | 1/Week | 2 |
| Electrical Conductivity @ 25°C | µmhos/cm | Grab | 1/Week | 2 |
| Hardness (as $CaCO_3$) | mg/L | 24-hr Composite[1] | 1/Month | 2 |
| Iron, Total Recoverable | µg/L | 24-hr Composite[1] | 1/Quarter | 2 |
| Manganese, Total Recoverable | µg/L | 24-hr Composite[1] | 1/Quarter | 2 |
| Methylmercury | ng/L | Grab | 1/Month | 2,6~~5~~ |
| Nitrate Nitrogen, Total (as N) | mg/L | 24-hr Composite[1] | 1/Month | 2 |
| Oil and Grease | µg/L | 24-hr Composite[1] | 1/Month | 2 |
| Settleable Solids | ml/L | Grab | 1/Month | 2 |
| Temperature | °F | Grab | 1/Day | 2 |
| Total Coliform Organisms | MPN/100 mL | Grab | 1/Day | 2 |
| Total Dissolved Solids | mg/L | Grab | 1/Week | 2 |

| Parameter | Units | Sample Type | Minimum Sampling Frequency | Required Analytical Test Method |
|---|---|---|---|---|
| Turbidity | NTU | Meter | Continuous | [2] |

[1] Composite samples shall be flow proportional.

[2] Pollutants shall be analyzed using the analytical methods described in 40 CFR Part 136.

[3] In order to verify if bis (2-ethylhexyl) phthalate is truly present in the effluent discharge, the Discharger shall take steps to assure that sample containers, sampling apparatus, and analytical equipment are not sources of the detected contaminant.

[4] For priority pollutant constituents with effluent limitations, detection limits shall be below the effluent limitations. If the lowest minimum level (ML) published in Appendix 4 of the Policy for Implementation of Toxics Standards for Inland Surface Waters, Enclosed Bays, and Estuaries of California (State Implementation Plan or SIP) is not below the effluent limitation, the detection limit shall be the lowest ML. For priority pollutant constituents without effluent limitations, the detection limits shall be equal to or less than the lowest ML published in Appendix 4 of the SIP.

[5] Monitoring required at Monitoring Location EFF-002 for discharges from Discharge Point No. 002, only.

[6~~5~~] Unfiltered methylmercury and total mercury samples shall be taken using clean hands/dirty hands procedures, as described in USEPA Method 1669: Sampling Ambient Water for Trace Metals at EPA Water Quality Levels, for collection of equipment blanks (section 9.4.4.2), and shall be analyzed by USEPA Method 1630/1631 (Revision E) with a method detection limit of 0.02 ng/L for methylmercury and 0.2 ng/L for total mercury.

[7~~6~~] Selenium shall be sampled using EPA Test Method 7742 or later amendment.

[8~~7~~] Volatile constituents shall be sampled in accordance with 40 CFR Part 136.

[9~~8~~] Monitoring is required 1/month ONLY during the 3rd year of the permit term and shall be concurrent with receiving surface water sampling. The Discharger is not required to conduct effluent monitoring for priority pollutants that have already been sampled in a given month, as required in Table E-3.

[10~~9~~] Compliance with the final effluent limitations for aluminum can be demonstrated using either total or acid-soluble (inductively coupled plasma/atomic emission spectrometry or inductively coupled plasma/mass spectrometry) analysis methods, as supported by USEPA's Ambient Water Quality Criteria for Aluminum document (EPA 440/5-86-008), or other standard methods that exclude aluminum silicate particles as approved by the Executive Officer.

[11~~10~~] Concurrent with whole effluent toxicity monitoring.

[12~~11~~] pH and temperature shall be recorded at the time of ammonia sample collection.

[13~~12~~] Total chlorine residual must be monitored with a method sensitive to and accurate at the permitted level of 0.01 mg/L.

[14~~13~~] Chlorpyrifos and diazinon shall be sampled using EPA Method 625M, Method 8141, or equivalent GC/MS method.

2. For emergency discharges to Harding Drain, on the first day of each such emergency discharge, the Discharger shall monitor and record data for the constituents listed in Table E-3, except for priority pollutants, after which the frequencies of analysis given in the schedule shall apply for the duration of each such emergency discharge. In no event shall the Discharger be required to monitor and record data more often than twice the frequencies listed in the schedule.

~~**B. Monitoring Location EFF-002**~~

~~**1. The Discharger shall monitor the tertiary treated effluent at Monitoring Location EFF-002 (for discharges from Discharge Point No. 002) as follows. If more than one**~~

~~**analytical test method is listed for a given parameter, the Discharger must select from the listed methods and corresponding Minimum Level.**~~

~~**Table E-4. Effluent Monitoring**~~

| ~~Parameter~~ | ~~Units~~ | ~~Sample Type~~ | ~~Minimum Sampling Frequency~~ | ~~Required Analytical Test Method~~ |
|---|---|---|---|---|
| ~~**Flow**~~ | ~~**MGD**~~ | ~~**Meter**~~ | ~~**Continuous**~~ | ~~**--**~~ |
| ~~*Conventional Pollutants*~~ | | | | |
| ~~**Biochemical Oxygen Demand (BOD) (5-day @ 20 Deg. C)**~~ | ~~**mg/L**~~ | ~~**24-hr Composite[1]**~~ | ~~**1/Day**~~ | ~~**2**~~ |
| | ~~**lbs/day**~~ | ~~**Calculate**~~ | ~~**1/Day**~~ | ~~**2**~~ |
| ~~**pH**~~ | ~~**standard units**~~ | ~~**Meter**~~ | ~~**Continuous**~~ | ~~**2**~~ |
| ~~**Total Suspended Solids**~~ | ~~**mg/L**~~ | ~~**24-hr Composite[1]**~~ | ~~**1/Day**~~ | ~~**2**~~ |
| | ~~**lbs/day**~~ | ~~**Calculate**~~ | ~~**1/Day**~~ | ~~**2**~~ |
| ~~*Priority Pollutants*~~ | | | | |
| ~~**Bis (2-ethylhexyl) phthalate**~~ | ~~**µg/L**~~ | ~~**Grab[3]**~~ | ~~**1/Quarter**~~ | ~~**2,4**~~ |
| ~~**Carbon Tetrachloride**~~ | ~~**µg/L**~~ | ~~**Grab**~~ | ~~**1/Month**~~ | ~~**2,4**~~ |
| ~~**Chlorodibromomethane**~~ | ~~**µg/L**~~ | ~~**Grab**~~ | ~~**1/Month**~~ | ~~**2,4**~~ |
| ~~**Copper, Total Recoverable**~~ | ~~**µg/L**~~ | ~~**24-hr Composite[1]**~~ | ~~**1/Month**~~ | ~~**2,4**~~ |
| ~~**Copper, Dissolved**~~ | ~~**µg/L**~~ | ~~**24-hr Composite[1]**~~ | ~~**1/Month**~~ | ~~**2,4**~~ |
| ~~**Dichlorobromomethane**~~ | ~~**µg/L**~~ | ~~**Grab**~~ | ~~**1/Month**~~ | ~~**2,4**~~ |
| ~~**Lead, Total Recoverable**~~ | ~~**µg/L**~~ | ~~**24-hr Composite[1]**~~ | ~~**1/Month**~~ | ~~**2,4**~~ |
| ~~**Mercury, Total Recoverable**~~ | ~~**ng/L**~~ | ~~**Grab**~~ | ~~**1/Month**~~ | ~~**2,4,5**~~ |
| ~~**Selenium, Total Recoverable**~~ | ~~**µg/L**~~ | ~~**24-hr Composite[1,6]**~~ | ~~**1/Month**~~ | ~~**2,4**~~ |
| ~~**Silver, Total Recoverable**~~ | ~~**µg/L**~~ | ~~**24-hr Composite[1]**~~ | ~~**1/Month**~~ | ~~**2,4**~~ |
| ~~**Zinc, Total Recoverable**~~ | ~~**µg/L**~~ | ~~**24-hr Composite[1]**~~ | ~~**1/Month**~~ | ~~**2,4**~~ |
| ~~**Priority Pollutants**~~ | ~~**µg/L**~~ | ~~**24-hr Composite[1,7]**~~ | ~~**1/Month[8]**~~ | ~~**2,4**~~ |
| ~~*Non-Conventional Pollutants*~~ | | | | |
| ~~**Aluminum, Total Recoverable**~~ | ~~**µg/L**~~ | ~~**24-hr Composite[1]**~~ | ~~**1/Month**~~ | ~~**2,9**~~ |
| ~~**Ammonia Nitrogen, Total (as N)**~~ | ~~**mg/L**~~ | ~~**Grab**~~ | ~~**1/Week[10,11]**~~ | ~~**2**~~ |
| ~~**Boron, Total Recoverable**~~ | ~~**µg/L**~~ | ~~**24-hr Composite[1]**~~ | ~~**1/Month**~~ | ~~**2**~~ |
| ~~**Chlorine, Total Residual**~~ | ~~**mg/L**~~ | ~~**Meter**~~ | ~~**Continuous**~~ | ~~**2,12**~~ |
| ~~**Chlorpyrifos**~~ | ~~**µg/L**~~ | ~~**24-hr Composite[1]**~~ | ~~**1/Quarter**~~ | ~~**2,13**~~ |
| ~~**Diazinon**~~ | ~~**µg/L**~~ | ~~**24-hr Composite[1]**~~ | ~~**1/Quarter**~~ | ~~**2,13**~~ |
| ~~**Dissolved Oxygen**~~ | ~~**mg/L**~~ | ~~**Grab**~~ | ~~**1/Week**~~ | ~~**2**~~ |

| ~~Parameter~~ | ~~Units~~ | ~~Sample Type~~ | ~~Minimum Sampling Frequency~~ | ~~Required Analytical Test Method~~ |
|---|---|---|---|---|
| ~~Electrical Conductivity @ 25°C~~ | ~~µmhos/cm~~ | ~~Grab~~ | ~~1/Week~~ | ~~2~~ |
| ~~Hardness (as $CaCO_3$)~~ | ~~mg/L~~ | ~~24-hr Composite[1]~~ | ~~1/Month~~ | ~~2~~ |
| ~~Iron, Total Recoverable~~ | ~~µg/L~~ | ~~24-hr Composite[1]~~ | ~~1/Quarter~~ | ~~2~~ |
| ~~Manganese, Total Recoverable~~ | ~~µg/L~~ | ~~24-hr Composite[1]~~ | ~~1/Quarter~~ | ~~2~~ |
| ~~Methylmercury~~ | ~~ng/L~~ | ~~Grab~~ | ~~1/Month~~ | ~~2,5~~ |
| ~~Nitrate Nitrogen, Total (as N)~~ | ~~mg/L~~ | ~~24-hr Composite[1]~~ | ~~1/Month~~ | ~~2~~ |
| ~~Oil and Grease~~ | ~~µg/L~~ | ~~24-hr Composite[1]~~ | ~~1/Month~~ | ~~2~~ |
| ~~Settleable Solids~~ | ~~ml/L~~ | ~~Grab~~ | ~~1/Month~~ | ~~2~~ |
| ~~Temperature~~ | ~~°F~~ | ~~Grab~~ | ~~1/Day~~ | ~~2~~ |
| ~~Total Coliform Organisms~~ | ~~MPN/100 mL~~ | ~~Grab~~ | ~~1/Day~~ | ~~2~~ |
| ~~Total Dissolved Solids~~ | ~~mg/L~~ | ~~Grab~~ | ~~1/Week~~ | ~~2~~ |
| ~~Turbidity~~ | ~~NTU~~ | ~~Meter~~ | ~~Continuous~~ | ~~2~~ |

~~[1] Composite samples shall be flow proportional.~~
~~[2] Pollutants shall be analyzed using the analytical methods described in 40 CFR Part 136.~~
~~[3] In order to verify if bis (2-ethylhexyl) phthalate is truly present in the effluent discharge, the Discharger shall take steps to assure that sample containers, sampling apparatus, and analytical equipment are not sources of the detected contaminant.~~
~~[4] For priority pollutant constituents with effluent limitations, detection limits shall be below the effluent limitations. If the lowest minimum level (ML) published in Appendix 4 of the Policy for Implementation of Toxics Standards for Inland Surface Waters, Enclosed Bays, and Estuaries of California (State Implementation Plan or SIP) is not below the effluent limitation, the detection limit shall be the lowest ML. For priority pollutant constituents without effluent limitations, the detection limits shall be equal to or less than the lowest ML published in Appendix 4 of the SIP.~~
~~[5] Unfiltered methylmercury and total mercury samples shall be taken using clean hands/dirty hands procedures, as described in USEPA Method 1669: Sampling Ambient Water for Trace Metals at EPA Water Quality Levels, for collection of equipment blanks (section 9.4.4.2), and shall be analyzed by USEPA Method 1630/1631 (Revision E) with a method detection limit of 0.02 ng/L for methylmercury and 0.2 ng/L for total mercury.~~
~~[6] Selenium shall be sampled using EPA Test Method 7742 or later amendment.~~
~~[7] Volatile constituents shall be sampled in accordance with 40 CFR Part 136.~~
~~[8] Monitoring is required 1/month ONLY during the 3rd year of the permit term and shall be concurrent with receiving surface water sampling.~~
~~[9] Compliance with the final effluent limitations for aluminum can be demonstrated using either total or acid-soluble (inductively coupled plasma/atomic emission spectrometry or inductively coupled plasma/mass spectrometry) analysis methods, as supported by USEPA's Ambient Water Quality Criteria for Aluminum document (EPA 440/5-86-008), or other standard methods that exclude aluminum silicate particles as approved by the Executive Officer.~~
~~[10] Concurrent with whole effluent toxicity monitoring.~~
~~[11] pH and temperature shall be recorded at the time of ammonia sample collection.~~
~~[12] Total chlorine residual must be monitored with a method sensitive to and accurate at the permitted level of 0.01 mg/L.~~
~~[13] Chlorpyrifos and diazinon shall be sampled using EPA Method 625M, Method 8141, or equivalent GC/MS method.~~

## V. WHOLE EFFLUENT TOXICITY TESTING REQUIREMENTS

A. **Acute Toxicity Testing.** The Discharger shall conduct acute toxicity testing to determine whether the effluent is contributing acute toxicity to the receiving water. The Discharger shall meet the following acute toxicity testing requirements:

1. *Monitoring Frequency* – The Discharger shall perform monthly acute toxicity testing, concurrent with effluent ammonia sampling.

2. *Sample Types* – For static non-renewal and static renewal testing, the samples shall be grab samples and shall be representative of the volume and quality of the discharge. The effluent samples shall be taken at the effluent monitoring location EFF-001 (when discharging from Discharge Point No. 001) and EFF-002 (when discharging from Discharge Point No. 002).

3. *Test Species* – Test species shall be fathead minnows (*Pimephales promelas*).

4. *Methods* – The acute toxicity testing samples shall be analyzed using EPA-821-R-02-012, Fifth Edition. Temperature, total residual chlorine, and pH shall be recorded at the time of sample collection. No pH adjustment may be made unless approved by the Executive Officer.

5. *Test Failure* – If an acute toxicity test does not meet all test acceptability criteria, as specified in the test method, the Discharger must re-sample and re-test as soon as possible, not to exceed 7 days following notification of test failure.

B. **Chronic Toxicity Testing**. The Discharger shall conduct three species chronic toxicity testing to determine whether the effluent is contributing chronic toxicity to the receiving water. The Discharger shall meet the following chronic toxicity testing requirements:

1. *Monitoring Frequency* – The Discharger shall perform quarterly three species chronic toxicity testing.

2. *Sample Types* – Effluent samples shall be flow proportional 24-hour composite samples and shall be representative of the volume and quality of the discharge. The effluent samples shall be taken at the effluent monitoring location specified in the Monitoring and Reporting Program. The receiving water control shall be a grab sample obtained from the RSW-001 (when discharging from Discharge Point No. 001) or RSW-005 (when discharging from Discharge Point No. 002) sampling location, as identified in the Monitoring and Reporting Program.

3. *Sample Volumes* – Adequate sample volumes shall be collected to provide renewal water to complete the test in the event that the discharge is intermittent.

4. *Test Species* – Chronic toxicity testing measures sublethal (e.g., reduced growth, reproduction) and/or lethal effects to test organisms exposed to an effluent compared to that of the control organisms. The Discharger shall conduct chronic toxicity tests with:

- The cladoceran, water flea, *Ceriodaphnia dubia* (survival and reproduction test);
- The fathead minnow, *Pimephales promelas* (larval survival and growth test); and
- The green alga, *Selenastrum capricornutum* (growth test).

5. *Methods* – The presence of chronic toxicity shall be estimated as specified in *Short-term Methods for Estimating the Chronic Toxicity of Effluents and Receiving Waters to Freshwater Organisms, Fourth Edition,* EPA/821-R-02-013, October 2002.

6. *Reference Toxicant* – As required by the SIP, all chronic toxicity tests shall be conducted with concurrent testing with a reference toxicant and shall be reported with the chronic toxicity test results.

7. *Dilutions* – The chronic toxicity testing shall be performed using the dilution series identified in Table E-~~5~~4, below. The receiving water control shall be used as the diluent (unless the receiving water is toxic).

   If the receiving water is toxic, laboratory control water may be used as the diluent, in which case, the receiving water should still be sampled and tested to provide evidence of its toxicity.

**Table E-~~5~~4. Chronic Toxicity Testing Dilution Series**

| Sample | Dilutions (%) | | | | | Controls | |
|---|---|---|---|---|---|---|---|
| | 100 | 75 | 50 | 25 | 12.5 | Receiving Water | Laboratory Water |
| % Effluent | 100 | 75 | 50 | 25 | 12.5 | 0 | 0 |
| % Receiving Water | 0 | 25 | 50 | 75 | 87.5 | 100 | 0 |
| % Laboratory Water | 0 | 0 | 0 | 0 | 0 | 0 | 100 |

8. *Test Failure* –The Discharger must re-sample and re-test as soon as possible, but no later than fourteen (14) days after receiving notification of a test failure. A test failure is defined as follows:

   a. The reference toxicant test or the effluent test does not meet all test acceptability criteria as specified in the *Short-term Methods for Estimating the Chronic Toxicity of Effluents and Receiving Waters to Freshwater Organisms, Fourth Edition*, EPA/821-R-02-013, October 2002 (Method Manual), and its subsequent amendments or revisions; or

   b. The percent minimum significant difference (PMSD) measured for the test exceeds the upper PMSD bound variability criterion in Table 6 on page 52 of the Method Manual. (A retest is only required in this case if the test results do not exceed the monitoring trigger specified in Special Provisions VI. 2.a.iii.)

C. **WET Testing Notification Requirements**. The Discharger shall notify the Regional Water Board within 24-hours after the receipt of test results exceeding the monitoring trigger during regular or accelerated monitoring, or an exceedance of the acute toxicity effluent limitation.

D. **WET Testing Reporting Requirements**. All toxicity test reports shall include the contracting laboratory's complete report provided to the Discharger and shall be in accordance with the appropriate "Report Preparation and Test Review" sections of the method manuals. At a minimum, whole effluent toxicity monitoring shall be reported as follows:

1. **Chronic WET Reporting.** Regular chronic toxicity monitoring results shall be reported to the Regional Water Board within 30 days following completion of the test, and shall contain, at minimum:

   a. The results expressed in TUc, measured as 100/NOEC, and also measured as $100/LC_{50}$, $100/EC_{25}$, $100/IC_{25}$, and $100/IC_{50}$, as appropriate.

   b. The statistical methods used to calculate endpoints;

   c. The statistical output page, which includes the calculation of the percent minimum significant difference (PMSD);

   d. The dates of sample collection and initiation of each toxicity test; and

   e. The results compared to the numeric toxicity monitoring trigger.

   Additionally, the monthly discharger self-monitoring reports shall contain an updated chronology of chronic toxicity test results expressed in TUc, and organized by test species, type of test (survival, growth or reproduction), and monitoring frequency, i.e., either quarterly, monthly, accelerated, or TRE.

2. **Acute WET Reporting.** Acute toxicity test results shall be submitted with the monthly discharger self-monitoring reports and reported as percent survival.

3. **TRE Reporting.** Reports for Toxicity Reduction Evaluations shall be submitted in accordance with the schedule contained in the Discharger's approved TRE Work Plan.

4. **Quality Assurance (QA).** The Discharger must provide the following information for QA purposes :

   a. Results of the applicable reference toxicant data with the statistical output page giving the species, NOEC, LOEC, type of toxicant, dilution water used, concentrations used, PMSD, and dates tested.

   b. The reference toxicant control charts for each endpoint, which include summaries of reference toxicant tests performed by the contracting laboratory.

   c. Any information on deviations or problems encountered and how they were dealt with.

## VI. LAND DISCHARGE MONITORING REQUIREMENTS

### A. Monitoring Location LND-001

1. The Discharger shall monitor the emergency storage basin (when in use) at LND-001 as follows:

**Table E-~~6~~5. Land Discharge Monitoring Requirements**

| Parameter | Units | Sample Type | Minimum Sampling Frequency | Required Analytical Test Method |
|---|---|---|---|---|
| Dissolved Oxygen | mg/L | Grab | 1/Week | [1] |
| Electrical Conductivity @ 25°C | µmhos/cm | Grab | 1/Week | [1] |
| Freeboard | feet | Measure | 1/Day | -- |
| Levee Condition | -- | Observation | 1/Week | -- |
| Odors | -- | Observation | 1/Week | -- |
| pH | standard units | Grab | 3/Week | [1] |

[1] Pollutants shall be analyzed using the analytical methods described in 40 CFR Part 136.

## VII. RECLAMATION MONITORING REQUIREMENTS

1. The Discharger shall monitor tertiary treated reclaimed water at Monitoring Location REC-001 as follows:

**Table E-~~6~~7. Reclamation Monitoring Requirements**

| Parameter | Units | Sample Type | Minimum Sampling Frequency | Required Analytical Test Method |
|---|---|---|---|---|
| Flow | mgd | Meter | Continuous | -- |
| Biochemical Oxygen Demand (5-day @ 20°C) | mg/L | Grab | 1/Day | [1] |
| Total Coliform Organisms | MPN/100 mL | Grab | 1/Day | [1] |
| Total Suspended Solids | mg/L | Grab | 1/Day | [1] |
| Turbidity | NTU | Meter | Continuous | [1] |

[1] Pollutants shall be analyzed using the analytical methods described in 40 CFR Part 136.

## VIII. RECEIVING WATER MONITORING REQUIREMENTS – SURFACE WATER AND GROUNDWATER

### A. Monitoring Locations RSW-001 through RSW-006

1. The Discharger shall monitor Harding Drain at RSW-001 and RSW-002 and the San Joaquin River at RSW-004, when discharging to Harding Drain at Discharge Point No. 001, as follows. Monitoring at RSW-001, RSW-002, and RSW-004 may be discontinued subsequent to the removal of the discharge from Harding Drain.

**Table E-7~~8~~. Receiving Water Monitoring Requirements – Monitoring Location RSW-001, RSW-002, and RSW-004**

| Parameter | Units | Sample Type | Minimum Sampling Frequency[1] | Required Analytical Test Method |
|---|---|---|---|---|
| Flow | MGD | -- | 1/Week[2] | -- |
| ***Conventional Pollutants*** | | | | |
| Fecal Coliform Organisms | MPN/100 mL | Grab | 1/Quarter | [3] |
| pH | standard units | Grab | 1/Week | [3] |
| ***Priority Pollutants*** | | | | |
| Priority Pollutants | µg/L | Grab | 1/Month[2,4] | [3] |
| ***Non-Conventional Pollutants*** | | | | |
| Ammonia Nitrogen, Total (as N) | mg/L | Grab[5] | 1/Month | [3] |
| Chlorpyrifos | µg/L | Grab | 1/Quarter | [3,6] |
| Diazinon | µg/L | Grab | 1/Quarter | [3,6] |
| Dissolved Oxygen | mg/L | Grab | 1/Week | [3] |
| Electrical Conductivity@ 25°C | µmhos/cm | Grab | 1/Week | [3] |
| Hardness (as $CaCO_3$) | mg/L | Grab | 1/Quarter | [3] |
| Temperature | °F | Grab | 1/Week | [3] |
| Turbidity | NTU | Grab | 1/Week | [3] |

1 Constituents with weekly sampling frequency may be reduced to monthly at RSW-004 when the San Joaquin River is at "monitor stage" (river elevation is at 48.0 feet (15,242 cfs) at the West Main Bridge near Patterson (SJP) gauging station) and may be discontinued while the San Joaquin River is at "flood stage" (river elevation is at 54.7 feet at the West Main Bridge near Patterson (SJP) gauging station).

2 Monitoring required at RSW-001 only.

3 Pollutants shall be analyzed using the analytical methods described in 40 CFR Part 136.

4 Priority pollutant monitoring is required 1/month during the 3rd year of the permit term.

5 Temperature and pH shall be collected at the same time as the ammonia sample.

6 Chlorpyrifos and diazinon shall be sampled using EPA Method 625M, Method 8141, or equivalent GC/MS method.

2. The Discharger shall monitor the San Joaquin River at RSW-003, when discharging to Harding Drain at Discharge Point No. 001 and the San Joaquin River at Discharge Point No. 002, as follows:

**Table E-~~9~~8. Receiving Water Monitoring Requirements – Monitoring Location RSW-003**

| Parameter | Units | Sample Type | Minimum Sampling Frequency[1] | Required Analytical Test Method |
|---|---|---|---|---|
| Flow | MGD | -- | 1/Week | -- |
| ***Conventional Pollutants*** | | | | |
| Fecal Coliform Organisms | MPN/100 mL | Grab | 1/Quarter | [2] |
| pH | standard units | Grab | 1/Week | [2] |
| ***Priority Pollutants*** | | | | |
| Priority Pollutants | µg/L | Grab | 1/Month[3] | [2] |
| ***Non-Conventional Pollutants*** | | | | |

| Parameter | Units | Sample Type | Minimum Sampling Frequency[1] | Required Analytical Test Method |
|---|---|---|---|---|
| Ammonia Nitrogen, Total (as N) | mg/L | Grab[4] | 1/Month | [2] |
| Chlorpyrifos | µg/L | Grab | 1/Quarter | [2,5] |
| Diazinon | µg/L | Grab | 1/Quarter | [2,5] |
| Dissolved Oxygen | mg/L | Grab | 1/Week | [2] |
| Electrical Conductivity@ 25°C | µmhos/cm | Grab | 1/Week | [2] |
| Hardness (as $CaCO_3$) | mg/L | Grab | 1/Quarter | [2] |
| Temperature | °F | Grab | 1/Week | [2] |
| Turbidity | NTU | Grab | 1/Week | [2] |

1 Constituents with weekly sampling frequency may be reduced to monthly when the San Joaquin River is at "monitor stage" (river elevation is at 48.0 feet (15,242 cfs) at the West Main Bridge near Patterson (SJP) gauging station) and may be discontinued while the San Joaquin River is at "flood stage" (river elevation is at 54.7 feet at the West Main Bridge near Patterson (SJP) gauging station).

2 Pollutants shall be analyzed using the analytical methods described in 40 CFR Part 136.

3 Priority pollutant monitoring is required 1/month during the 3rd year of the permit term.

4 Temperature and pH shall be collected at the same time as the ammonia sample.

5 Chlorpyrifos and diazinon shall be sampled using EPA Method 625M, Method 8141, or equivalent GC/MS method.

3. The Discharger shall monitor the San Joaquin River at RSW-005, when discharging to the San Joaquin River at Discharge Point No. 002, as follows:

**Table E-~~10~~9. Receiving Water Monitoring Requirements – Monitoring Location RSW-005**

| Parameter | Units | Sample Type | Minimum Sampling Frequency[1] | Required Analytical Test Method |
|---|---|---|---|---|
| ***Conventional Pollutants*** | | | | |
| Fecal Coliform Organisms | MPN/100 mL | Grab | 1/Quarter | [2] |
| pH | standard units | Grab | 1/Week | [2] |
| ***Non-Conventional Pollutants*** | | | | |
| Ammonia Nitrogen, Total (as N) | mg/L | Grab[3] | 1/Month | [2] |
| Chlorpyrifos | µg/L | Grab | 1/Quarter | [2,4] |
| Diazinon | µg/L | Grab | 1/Quarter | [2,4] |
| Dissolved Oxygen | mg/L | Grab | 1/Week | [2] |
| Electrical Conductivity@ 25°C | µmhos/cm | Grab | 1/Week | [2] |
| Hardness (as $CaCO_3$) | mg/L | Grab | 1/Quarter | [2] |
| Temperature | °F | Grab | 1/Week | [2] |
| Turbidity | NTU | Grab | 1/Week | [2] |

| Parameter | Units | Sample Type | Minimum Sampling Frequency[1] | Required Analytical Test Method |
|---|---|---|---|---|

[1] Constituents with weekly sampling frequency may be reduced to monthly when the San Joaquin River is at "monitor stage" (river elevation is at 48.0 feet (15,242 cfs) at the West Main Bridge near Patterson (SJP) gauging station) and may be discontinued while the San Joaquin River is at "flood stage" (river elevation is at 54.7 feet at the West Main Bridge near Patterson (SJP) gauging station).

[2] Pollutants shall be analyzed using the analytical methods described in 40 CFR Part 136.

[3] Temperature and pH shall be collected at the same time as the ammonia sample.

[4] Chlorpyrifos and diazinon shall be sampled using EPA Method 625M, Method 8141, or equivalent GC/MS method.

4. The Discharger shall monitor the San Joaquin River at RSW-006, when discharging to the San Joaquin River at Discharge Point No. 002, as follows:

**Table E-~~11~~10. Receiving Water Monitoring Requirements – Monitoring Location RSW-006**

| Parameter | Units | Sample Type | Minimum Sampling Frequency[1] | Required Analytical Test Method |
|---|---|---|---|---|
| ***Priority Pollutants*** | | | | |
| Carbon Tetrachloride | µg/L | Grab | 1/Quarter | [2] |
| Chlorodibromomethane | µg/L | Grab | 1/Quarter | [2] |
| Dichlorobromomethane | µg/L | Grab | 1/Quarter | [2] |

[1] Constituents with weekly sampling frequency may be reduced to monthly when the San Joaquin River is at "monitor stage" (river elevation is at 48.0 feet (15,242 cfs) at the West Main Bridge near Patterson (SJP) gauging station) and may be discontinued while the San Joaquin River is at "flood stage" (river elevation is at 54.7 feet at the West Main Bridge near Patterson (SJP) gauging station).

[2] Pollutants shall be analyzed using the analytical methods described in 40 CFR Part 136.

5. In conducting the receiving water sampling when discharging to Harding Drain at Discharge Point No. 001, a log shall be kept of the receiving water conditions throughout the reach bounded by Monitoring Locations RSW-001 and RSW-002 and the reach bounded by Monitoring Locations RSW-003 and RSW-004. In conducting the receiving water sampling when discharging to the San Joaquin River at Discharge Point No. 002, a log shall be kept of the receiving water conditions throughout the reach bounded by Monitoring Locations RSW-003 and RSW-005. Attention shall be given to the presence or absence of:

   a. Floating or suspended matter;
   b. Discoloration;
   c. Bottom deposits;
   d. Aquatic life;
   e. Visible films, sheens, or coatings;
   f. Fungi, slimes, or objectionable growths; and
   g. Potential nuisance conditions.

   Notes on receiving water conditions shall be summarized in the monitoring report.

## B. Monitoring Locations GW-001 and GW-002

1. Prior to construction and/or sampling of any new groundwater monitoring wells, the Discharger shall submit plans and specifications to the Regional Water Board for approval. Once installed, all new wells shall be added to the monitoring network (which currently consists of Monitoring Well Nos. GW-001 and GW-002) and shall be sampled and analyzed according to the schedule below. All samples shall be collected using approved EPA methods. Water table elevations shall be calculated to determine groundwater gradient and direction of flow.

   Prior to sampling, the groundwater elevations shall be measured and the wells shall be purged of at least three well volumes until temperature, pH, and electrical conductivity have stabilized. Depth to groundwater shall be measured to the nearest 0.01 feet. Groundwater monitoring at GW-001, GW-002, and any new groundwater monitoring wells shall include, at a minimum, the following: ~~The Discharger shall monitor groundwater at GW-001 and GW-002 as follows:~~

**Table E-~~12~~11. Groundwater Monitoring Requirements**

| Parameter | Units | Sample Type | Minimum Sampling Frequency | Required Analytical Test Method |
|---|---|---|---|---|
| Depth to Groundwater | ±0.01 feet | Measurement | 1/Quarter | -- |
| Groundwater Elevation[1] | ±0.01 feet | ~~Measure~~Calculated | 1/Quarter | -- |
| Gradient | feet/feet | Calculated | 1/Quarter | -- |
| Gradient Direction | degrees | Calculated | 1/Quarter | -- |
| Electrical Conductivity @ 25°C | µmhos/cm | Grab | 1/Quarter | [2] |
| Total Dissolved Solids | mg/L | Grab | 1/Quarter | [2] |
| Fixed Dissolved Solids | mg/L | Grab | 1/Quarter | [2] |
| pH | standard units | Grab | 1/Quarter | [2] |
| Total Coliform Organisms | MPN/100 mL | Grab | 1/Quarter | [2] |
| Total Nitrogen | mg/L | Grab | 1/Quarter | [2] |
| Nitrate Nitrogen, Total (as N) | mg/L | Grab | 1/Quarter | [2] |
| Ammonia (as $NH_4$) | mg/L | Grab | 1/Quarter | [2] |
| Total Kjeldahl Nitrogen | mg/L | Grab | 1/Quarter | [2] |
| Standard Minerals[3] | µg/L | Grab | 1/Year | [2] |

[1] Groundwater elevation shall be determined based on depth-to-water measurements from a surveyed measuring point elevation on the well. The groundwater elevation shall be used to calculate the direction and gradient of groundwater flow, which must be reported.

[2] Pollutants shall be analyzed using the analytical methods described in 40 CFR Part 136.

[3] Standard minerals shall include the following: boron, calcium, iron, magnesium, potassium, sodium, chloride, manganese, phosphorus, total alkalinity (including alkalinity series), and hardness, and include verification that the analysis is complete (i.e., cation/anion balance).

# IX. OTHER MONITORING REQUIREMENTS

## A. Biosolids

### 1. Monitoring Location BIO-001

a. A composite sample of biosolids shall be collected quarterly at Monitoring Location BIO-001 in accordance with EPA's *POTW Sludge Sampling and Analysis Guidance Document*, August 1989, and tested for priority pollutants listed in 40 CFR Part 122, Appendix D, Tables II and III (excluding total phenols).

b. Sampling records shall be retained for a minimum of **5 years**. A log shall be maintained of biosolids quantities generated and of handling and disposal activities. The frequency of entries is discretionary; however, the log must be complete enough to serve as a basis for part of the annual report.

c. Upon removal of biosolids, the Discharger shall submit characterization of biosolids quality, including sludge percent solids and the most recent quantitative results of chemical analysis for the priority pollutants listed in 40 CFR Part 122, Appendix D, Tables II and III (excluding total phenols). In addition to USEPA's POTW *Sludge Sampling and Analysis Guidance Document*, August 1989, suggested methods for analysis of biosolids are provided in USEPA publications titled "*Test Methods for Evaluating Solid Waste: Physical/Chemical Methods*" and "*Test Methods for Organic Chemical Analysis of Municipal and Industrial Wastewater*". Recommended analytical holding times for biosolids samples should reflect those specified in 40 CFR 136.6.3(e). Other guidance is available.

## B. Municipal Water Supply

### 1. Monitoring Location SPL-001

The Discharger shall monitor the Municipal Water Supply at SPL-001 as follows. A sampling station shall be established where a representative sample of the municipal water supply can be obtained. Municipal water supply samples shall be collected at approximately the same time as effluent samples.

**Table E-~~13~~12. Municipal Water Supply Monitoring Requirements**

| Parameter | Units | Sample Type | Minimum Sampling Frequency[1] | Required Analytical Test Method |
|---|---|---|---|---|
| Standard Minerals[2] | µg/L | -- | 2/Year | [3] |
| Electrical Conductivity @ 25°C | µmhos/cm | -- | 1/Quarter | [3] |
| Total Dissolved Solids | mg/L | -- | 1/Quarter | [3] |

| Parameter | Units | Sample Type | Minimum Sampling Frequency[1] | Required Analytical Test Method |
|---|---|---|---|---|

[1] If the water supply is from more than one source, the results shall be reported as a weighted average and include copies of supporting calculations. Alternatively, the Discharger may composite individual grab samples on a flow-weighted basis from multiple locations to represent the water supply within the service area. Composited samples must taken in accordance with the sample handling and preservation requirements specified in 40 CFR Part 136.

[2] Standard minerals shall include the following: boron, calcium, iron, magnesium, potassium, sodium, chloride, manganese, phosphorus, total alkalinity (including alkalinity series), and hardness, and include verification that the analysis is complete (i.e., cation/anion balance).

[3] Pollutants shall be analyzed using the analytical methods described in 40 CFR Part 136.

# X. REPORTING REQUIREMENTS

## A. General Monitoring and Reporting Requirements

1. The Discharger shall comply with all Standard Provisions (Attachment D) related to monitoring, reporting, and recordkeeping.

2. Upon written request of the Regional Water Board, the Discharger shall submit a summary monitoring report. The report shall contain both tabular and graphical summaries of the monitoring data obtained during the previous year(s).

3. **Compliance Time Schedules.** For compliance time schedules included in the Order, the Discharger shall submit to the Regional Water Board, on or before each compliance due date, the specified document or a written report detailing compliance or noncompliance with the specific date and task. If noncompliance is reported, the Discharger shall state the reasons for noncompliance and include an estimate of the date when the Discharger will be in compliance. The Discharger shall notify the Regional Water Board by letter when it returns to compliance with the compliance time schedule.

4. The Discharger shall report to the Regional Water Board any toxic chemical release data it reports to the State Emergency Response Commission within 15 days of reporting the data to the Commission pursuant to section 313 of the "Emergency Planning and Community Right to Know Act" of 1986.

5. **Reporting Protocols.** The Discharger shall report with each sample result the applicable Reporting Level (RL) and the current Method Detection Limit (MDL), as determined by the procedure in 40 CFR Part 136.

   The Discharger shall report the results of analytical determinations for the presence of chemical constituents in a sample using the following reporting protocols:

   a. Sample results greater than or equal to the RL shall be reported as measured by the laboratory (i.e., the measured chemical concentration in the sample).

   b. Sample results less than the RL, but greater than or equal to the laboratory's MDL, shall be reported as "Detected, but Not Quantified," or DNQ. The estimated chemical concentration of the sample shall also be reported.

For the purposes of data collection, the laboratory shall write the estimated chemical concentration next to DNQ as well as the words "Estimated Concentration" (may be shortened to "Est. Conc."). The laboratory may, if such information is available, include numerical estimates of the data quality for the reported result. Numerical estimates of data quality may be percent accuracy (± a percentage of the reported value), numerical ranges (low to high), or any other means considered appropriate by the laboratory.

c. Sample results less than the laboratory's MDL shall be reported as "Not Detected," or ND.

d. Dischargers are to instruct laboratories to establish calibration standards so that the ML value (or its equivalent if there is differential treatment of samples relative to calibration standards) is the lowest calibration standard. At no time is the Discharger to use analytical data derived from *extrapolation* beyond the lowest point of the calibration curve.

6. **Multiple Sample Data.** When determining compliance with an AMEL , AWEL, or MDEL for priority pollutants and more than one sample result is available, the Discharger shall compute the arithmetic mean unless the data set contains one or more reported determinations of "Detected, but Not Quantified" (DNQ) or "Not Detected" (ND). In those cases, the Discharger shall compute the median in place of the arithmetic mean in accordance with the following procedure:

   a. The data set shall be ranked from low to high, ranking the reported ND determinations lowest, DNQ determinations next, followed by quantified values (if any). The order of the individual ND or DNQ determinations is unimportant.

   b. The median value of the data set shall be determined. If the data set has an odd number of data points, then the median is the middle value. If the data set has an even number of data points, then the median is the average of the two values around the middle unless one or both of the points are ND or DNQ, in which case the median value shall be the lower of the two data points where DNQ is lower than a value and ND is lower than DNQ.

## B. Self Monitoring Reports (SMRs)

1. At any time during the term of this permit, the State or Regional Water Board may notify the Discharger to electronically submit Self-Monitoring Reports (SMRs) using the State Water Board's California Integrated Water Quality System (CIWQS) Program Web site (http://www.waterboards.ca.gov/ciwqs/index.html). Until such notification is given, the Discharger shall submit hard copy SMRs. The CIWQS Web site will provide additional directions for SMR submittal in the event there will be service interruption for electronic submittal.

2. Monitoring results shall be submitted to the Regional Water Board by the **first day** of the second month following sample collection. Quarterly and annual monitoring results shall be submitted by the **first day of the second month following each calendar quarter, semi-annual period, and year**, respectively.

3. In reporting the monitoring data, the Discharger shall arrange the data in tabular form so that the date, the constituents, and the concentrations are readily discernible. The data shall be summarized in such a manner to illustrate clearly whether the discharge complies with waste discharge requirements. The highest daily maximum for the month, monthly and weekly averages, and medians, and removal efficiencies (%) for BOD and Total Suspended Solids, shall be determined and recorded as needed to demonstrate compliance.

4. With the exception of flow, all constituents monitored on a continuous basis (metered), shall be reported as daily maximums, daily minimums, and daily averages; flow shall be reported as the total volume discharged per day for each day of discharge.

5. If the Discharger monitors any pollutant at the locations designated herein more frequently than is required by this Order, the results of such monitoring shall be included in the calculation and reporting of the values required in the discharge monitoring report form. Such increased frequency shall be indicated on the discharge monitoring report form.

6. A letter transmitting the self-monitoring reports shall accompany each report. Such a letter shall include a discussion of requirement violations found during the reporting period, and actions taken or planned for correcting noted violations, such as operation or facility modifications. If the Discharger has previously submitted a report describing corrective actions and/or a time schedule for implementing the corrective actions, reference to the previous correspondence will be satisfactory. The transmittal letter shall contain the penalty of perjury statement by the Discharger, or the Discharger's authorized agent, as described in the Standard Provisions.

7. SMRs must be submitted to the Regional Water Board, signed and certified as required by the Standard Provisions (Attachment D), to the address listed below:

   Regional Water Quality Control Board
   Central Valley Region
   NPDES Compliance and Enforcement Unit
   11020 Sun Center Dr., Suite #200
   Rancho Cordova, CA 95670-6114

8. Monitoring periods and reporting for all required monitoring shall be completed according to the following schedule:

**Table E-~~14~~13. Monitoring Periods and Reporting Schedule**

| Sampling Frequency | Monitoring Period Begins On… | Monitoring Period | SMR Due Date |
|---|---|---|---|
| Continuous | Permit effective date | All | First day of second calendar month following month of sampling |

| Sampling Frequency | Monitoring Period Begins On… | Monitoring Period | SMR Due Date |
|---|---|---|---|
| 1/Day | Permit effective date | (Midnight through 11:59 PM) or any 24-hour period that reasonably represents a calendar day for purposes of sampling. | First day of second calendar month following month of sampling |
| 1/Week | Sunday following permit effective date or on permit effective date if on a Sunday | Sunday through Saturday | First day of second calendar month following month of sampling |
| 2/Week | Sunday following permit effective date or on permit effective date if on a Sunday | Sunday through Saturday | First day of second calendar month following month of sampling |
| 3/Week | Sunday following permit effective date or on permit effective date if on a Sunday | Sunday through Saturday | First day of second calendar month following month of sampling |
| 1/Month | First day of calendar month following permit effective date or on permit effective date if that date is first day of the month | 1st day of calendar month through last day of calendar month | First day of second calendar month following month of sampling |
| 2/Month | First day of calendar month following permit effective date or on permit effective date if that date is first day of the month | 1st day of calendar month through last day of calendar month | First day of second calendar month following month of sampling |
| 1/Quarter | Closest of 1January, 1 April, 1 July, or 1 October following (or on) permit effective date | 1 January through 31 March<br>1 April through 30 June<br>1 July through 30 September<br>1 October through 31 December | 1 May<br>1 August<br>1 November<br>1 February |
| 1/Year | 1 January following (or on) permit effective date | January 1 through December 31 | 1 February |
| 2/Year | Closest of 1 January or 1 July following (or on) permit effective date | 1 January through 30 June<br>1 July through 31 December | 1 August<br>1 February |

## C. Discharge Monitoring Reports (DMRs)

1. As described in Section X.B.1 above, at any time during the term of this permit, the State or Regional Water Board may notify the Discharger to electronically submit SMRs that will satisfy federal requirements for submittal of Discharge Monitoring Reports (DMRs). Until such notification is given, the Discharger shall submit DMRs in accordance with the requirements described below.

2. DMRs must be signed and certified as required by the standard provisions (Attachment D). The Discharger shall submit the original DMR and one copy of the DMR to the address listed below:

| Standard Mail | FedEx/UPS/ Other Private Carriers |
|---|---|
| State Water Resources Control Board<br>Division of Water Quality<br>c/o DMR Processing Center<br>PO Box 100<br>Sacramento, CA 95812-1000 | State Water Resources Control Board<br>Division of Water Quality<br>c/o DMR Processing Center<br>1001 I Street, 15th Floor<br>Sacramento, CA 95814 |

3. All discharge monitoring results must be reported on the official USEPA pre-printed DMR forms (EPA Form 3320-1). Forms that are self-generated cannot be accepted unless they follow the exact same format as EPA form 3320-1.

## D. Other Reports

1. **Progress Reports.** As specified in the compliance time schedules required in Special Provisions VI, progress reports shall be submitted in accordance with the following reporting requirements. At minimum, the progress reports shall include a discussion of the status of final compliance, whether the Discharger is on schedule to meet the final compliance date, and the remaining tasks to meet the final compliance date.

**Table E-~~15~~14. Reporting Requirements for Special Provisions Progress Reports**

| Special Provision | Reporting Requirements |
|---|---|
| Salinity Source Control Program and Goal (section VI.C.3.a.) | **1 ~~October~~June**, annually |

2. Within **60 days** of permit adoption, the Discharger shall submit a report outlining minimum levels, method detection limits, and analytical methods for approval, with a goal to achieve detection levels below applicable water quality criteria. At a minimum, the Discharger shall comply with the monitoring requirements for CTR constituents as outlined in Section 2.3 and 2.4 of the *Policy for Implementation of Toxics Standards for Inland Surface Waters, Enclosed Bays, and Estuaries of California*, adopted 2 March 2000 by the State Water Resources Control Board. All peaks identified by analytical methods shall be reported.

3. The Discharger's sanitary sewer system collects wastewater using sewers, pipes, pumps, and/or other conveyance systems and directs the raw sewage to the wastewater treatment plant. A "sanitary sewer overflow" is defined as a discharge to ground or surface water from the sanitary sewer system at any point upstream of the wastewater treatment plant. Sanitary sewer overflows are prohibited by this Order. All violations must be reported as required in Standard Provisions. Facilities (such as wet wells, regulated impoundments, tanks, highlines, *etc.*) may be part of a sanitary sewer system and discharges to these facilities are not considered sanitary sewer overflows, provided that the waste is fully contained within these temporary storage facilities.

4. **Annual Operations Report**. By **30 January** of each year, the Discharger shall submit a written report to the Executive Officer containing the following:

   a. The names, certificate grades, and general responsibilities of all persons employed at the Facility.

   b. The names and telephone numbers of persons to contact regarding the plant for emergency and routine situations.

   c. A statement certifying when the flow meter(s) and other monitoring instruments and devices were last calibrated, including identification of who performed the calibration.

   d. A statement certifying whether the current operation and maintenance manual, and contingency plan, reflect the wastewater treatment plant as currently constructed and operated, and the dates when these documents were last revised and last reviewed for adequacy.

   e. The Discharger may also be requested to submit an annual report to the Regional Water Board with both tabular and graphical summaries of the monitoring data obtained during the previous year. Any such request shall be made in writing. The report shall discuss the compliance record. If violations have occurred, the report shall also discuss the corrective actions taken and planned to bring the discharge into full compliance with the waste discharge requirements.

5. **Annual Pretreatment Reporting Requirements.** The Discharger shall submit annually a report to the Regional Water Board, with copies to USEPA Region 9 and the State Water Board, describing the Discharger's pretreatment activities over the previous 12 months. In the event that the Discharger is not in compliance with any conditions or requirements of this Order, including noncompliance with pretreatment audit/compliance inspection requirements, then the Discharger shall also include the reasons for noncompliance and state how and when the Discharger shall comply with such conditions and requirements.

   An annual report shall be submitted by **28 February** and include at least the following items:

   a. A summary of analytical results from representative, flow proportioned, 24-hour composite sampling of the POTW's influent and effluent for those pollutants USEPA has identified under Section 307(a) of the CWA which are known or suspected to be discharged by industrial users.

      Sludge shall be sampled during the same 24-hour period and analyzed for the same pollutants as the influent and effluent sampling and analysis. The sludge analyzed shall be a composite sample of a minimum of 12 discrete samples taken at equal time intervals over the 24-hour period. Wastewater and sludge sampling and analysis shall be performed at least annually. The discharger shall

also provide any influent, effluent or sludge monitoring data for nonpriority pollutants which may be causing or contributing to Interference, Pass-Through or adversely impacting sludge quality. Sampling and analysis shall be performed in accordance with the techniques prescribed in 40 CFR 136 and amendments thereto.

b. A discussion of Upset, Interference, or Pass-Through incidents, if any, at the treatment plant, which the Discharger knows or suspects were caused by industrial users of the POTW. The discussion shall include the reasons why the incidents occurred, the corrective actions taken and, if known, the name and address of, the industrial user(s) responsible. The discussion shall also include a review of the applicable pollutant limitations to determine whether any additional limitations, or changes to existing requirements, may be necessary to prevent Pass-Through, Interference, or noncompliance with sludge disposal requirements.

c. The cumulative number of industrial users that the Discharger has notified regarding Baseline Monitoring Reports and the cumulative number of industrial user responses.

d. An updated list of the Discharger's industrial users including their names and addresses, or a list of deletions and additions keyed to a previously submitted list. The Discharger shall provide a brief explanation for each deletion. The list shall identify the industrial users subject to federal categorical standards by specifying which set(s) of standards are applicable. The list shall indicate which categorical industries, or specific pollutants from each industry, are subject to local limitations that are more stringent than the federal categorical standards. The Discharger shall also list the noncategorical industrial users that are subject only to local discharge limitations. The Discharger shall characterize the compliance status through the year of record of each industrial user by employing the following descriptions:

   i. complied with baseline monitoring report requirements (where applicable);
   ii. consistently achieved compliance;
   iii. inconsistently achieved compliance;
   iv. significantly violated applicable pretreatment requirements as defined by 40 CFR 403.8(f)(2)(vii);
   v. complied with schedule to achieve compliance (include the date final compliance is required);
   vi. did not achieve compliance and not on a compliance schedule; and
   vii. compliance status unknown.

   A report describing the compliance status of each industrial user characterized by the descriptions in items iii. through vii. above shall be submitted for each calendar quarter **within 21 days of the end of the quarter**. The report shall identify the specific compliance status of each such industrial user and shall also identify the compliance status of the POTW with regards to audit/pretreatment compliance inspection requirements. If none of the aforementioned conditions

exist, at a minimum, a letter indicating that all industries are in compliance and no violations or changes to the pretreatment program have occurred during the quarter must be submitted. The information required in the fourth quarter report shall be included as part of the annual report. This quarterly reporting requirement shall commence upon issuance of this Order.

e. A summary of the inspection and sampling activities conducted by the Discharger during the past year to gather information and data regarding the industrial users. The summary shall include:

   i. the names and addresses of the industrial users subjected to surveillance and an explanation of whether they were inspected, sampled, or both and the frequency of these activities at each user; and
   ii. the conclusions or results from the inspection or sampling of each industrial user.

f. A summary of the compliance and enforcement activities during the past year. The summary shall include the names and addresses of the industrial users affected by the following actions:

   i. Warning letters or notices of violation regarding the industrial users' apparent noncompliance with federal categorical standards or local discharge limitations. For each industrial user, identify whether the apparent violation concerned the federal categorical standards or local discharge limitations.
   ii. Administrative orders regarding the industrial users noncompliance with federal categorical standards or local discharge limitations. For each industrial user, identify whether the violation concerned the federal categorical standards or local discharge limitations.
   iii. Civil actions regarding the industrial users' noncompliance with federal categorical standards or local discharge limitations. For each industrial user, identify whether the violation concerned the federal categorical standards or local discharge limitations.
   iv. Criminal actions regarding the industrial users noncompliance with federal categorical standards or local discharge limitations. For each industrial user, identify whether the violation concerned the federal categorical standards or local discharge limitations.
   v. Assessment of monetary penalties. For each industrial user identify the amount of the penalties.
   vi. Restriction of flow to the POTW.
   vii. Disconnection from discharge to the POTW.

g. A description of any significant changes in operating the pretreatment program which differ from the information in the Discharger's approved Pretreatment Program including, but not limited to, changes concerning: the program's administrative structure, local industrial discharge limitations, monitoring program or monitoring frequencies, legal authority or enforcement policy, funding mechanisms, resource requirements, or staffing levels.

h. A summary of the annual pretreatment budget, including the cost of pretreatment program functions and equipment purchases.

Duplicate signed copies of these Pretreatment Program reports shall be submitted to the Regional Water Board and the:

State Water Resources Control Board
Division of Water Quality
1001 I Street or P.O. Box 100
Sacramento, CA 95812

and the

Regional Administrator
U.S. Environmental Protection Agency W-5
75 Hawthorne Street
San Francisco, CA 94105

6. **Water Recycling/Reuse Annual Report.** An annual report shall be prepared and shall include an update of the Discharger's water recycling/reuse activities within the Discharger's service area (e.g., landscape, golf course irrigation, etc). The annual report shall be submitted to the Regional Water Board by **1 July** each year.

# ATTACHMENT F – FACT SHEET

## Table of Contents

Attachment F – Fact Sheet ..... F-4
I. Permit Information ..... F-4
II. Facility Description ..... F-6
A. Description of Wastewater and Biosolids Treatment or Controls ..... F-6
B. Discharge Points and Receiving Waters ..... F-6
C. Summary of Existing Requirements and Self-Monitoring Report (SMR) Data ..... F-7
D. Compliance Summary ..... F-9
E. Planned Changes ..... F-9
III. Applicable Plans, Policies, and Regulations ..... F-10
A. Legal Authority ..... F-10
B. California Environmental Quality Act (CEQA) ..... F-10
C. State and Federal Regulations, Policies, and Plans ..... F-10
D. Impaired Water Bodies on CWA 303(d) List ..... F-20
E. Other Plans, Polices and Regulations ..... F-20
IV. Rationale For Effluent Limitations and Discharge Specifications ..... F-21
A. Discharge Prohibitions ..... F-22
B. Technology-Based Effluent Limitations ..... F-23
1. Scope and Authority ..... F-23
2. Applicable Technology-Based Effluent Limitations ..... F-23
C. Water Quality-Based Effluent Limitations (WQBELs) ..... F-24
1. Scope and Authority ..... F-24
2. Applicable Beneficial Uses and Water Quality Criteria and Objectives ..... F-25
3. Determining the Need for WQBELs ..... F-40
4. WQBEL Calculations ..... F-69~~F-69~~~~F-68~~
5. Whole Effluent Toxicity (WET) ..... F-78
D. Final Effluent Limitations ..... F-81
1. Mass-based Effluent Limitations. ..... F-81
2. Averaging Periods for Effluent Limitations. ..... F-81
3. Satisfaction of Anti-Backsliding Requirements ..... F-82
4. Satisfaction of Antidegradation Policy ..... F-83
E. Interim Effluent Limitations ..... F-88
F. Land Discharge Specifications ..... F-89
G. Reclamation Specifications ..... F-89
V. Rationale for Receiving Water Limitations ..... F-90
A. Surface Water ..... F-90
B. Groundwater ..... F-91
VI. Rationale for Monitoring and Reporting Requirements ..... F-92
A. Influent Monitoring ..... F-92
B. Effluent Monitoring ..... F-92
C. Whole Effluent Toxicity Testing Requirements ..... F-94
D. Receiving Water Monitoring ..... F-94
1. Surface Water ..... F-94
2. Groundwater ..... F-96

E. Other Monitoring Requirements ..... F-97
VII. Rationale for Provisions ..... F-97
A. Standard Provisions ..... F-97
B. Special Provisions ..... F-98
1. Reopener Provisions ..... F-98
2. Special Studies and Additional Monitoring Requirements ..... F-99
3. Best Management Practices and Pollution Prevention ..... F-103
4. Construction, Operation, and Maintenance Specifications ..... F-103
5. Special Provisions for Municipal Facilities (POTWs Only) ..... F-104
6. Other Special Provisions ..... F-104
7. Compliance Schedules ..... F-104
VIII. Public Participation ..... F-105
A. Notification of Interested Parties ..... F-105
B. Written Comments ..... F-105
C. Public Hearing ..... F-106
D. Waste Discharge Requirements Petitions ..... F-106
E. Information and Copying ..... F-106
F. Register of Interested Persons ..... F-106
G. Additional Information ..... F-107

## List of Tables

Table F-1. Facility Information ..... F-4
Table F-2. Historic Effluent Limitations and Monitoring Data ..... F-7
Table F-3. Summary of Effluent Limitation Exceedances During 9 December 2004 CEI ..... F-9
Table F-4. Summary of Technology-based Effluent Limitations ..... F-24
Table F-5. Copper ECA Evaluation ..... F-29
Table F-6. Lead ECA Evaluation ..... F-32
Table F-7. Lead ECA Evaluation ..... F-32
Table F-8. Lead ECA Evaluation ..... F-33
Table F-9. Metals Translators Based on Effluent Samples ..... F-40
Table F-10. Metals Translators Based on Synthetic Samples ..... F-40
Table F-11. Site-Specific Water Quality Objectives for Boron ..... F-47
Table F-12. Site-Specific Water Quality Objectives for Diazinon and Chlorpyrifos ..... F-53
Table F-13. Salinity Water Quality Criteria/Objectives ..... F-62
Table F-14. WQBEL Calculations for Aluminum at Discharge Point No. 002 ..... F-70
Table F-15. WQBEL Calculations for Ammonia at Discharge Point No. 001 ..... F-71
Table F-16. WQBEL Calculations for Ammonia at Discharge Point No. 002 ..... F-71
Table F-17. WQBEL Calculations for Carbon Tetrachloride at Discharge Point No. 001 ..... F-71
Table F-18. WQBEL Calculations for Carbon Tetrachloride at Discharge Point No. 002 ..... F-72
Table F-19. WQBEL Calculations for Chloride at Discharge Point No. 002 ..... F-72
Table F-20. WQBEL Calculations for Chlorodibromomethane at Discharge Point No. 001. F-72
Table F-21. WQBEL Calculations for Chlorodibromomethane at Discharge Point No. 002. F-73
Table F-22. WQBEL Calculations for Copper at Discharge Point Nos. 001 and 002 ..... F-73
Table F-23. WQBEL Calculations for Dichlorobromomethane at Discharge Point No. 001. F-73
Table F-24. WQBEL Calculations for Dichlorobromomethane at Discharge Point No. 002. F-74
Table F-25. WQBEL Calculations for Lead at Discharge Point No. 002 ..... F-74

Table F-26. WQBEL Calculations for Selenium at Discharge Point No. 001 ..... F-75
Table F-27. WQBEL Calculations for Selenium at Discharge Point No. 002 ..... F-75
Table F-28. WQBEL Calculations for Silver at Discharge Point No. 002 ..... F-76
Table F-29. Summary of Water Quality-based Effluent Limitations for Discharge Point No. 001 (Harding Drain) ..... F-76
Table F-30. Summary of Water Quality-based Effluent Limitations for Discharge Point No. 002 (San Joaquin River) ..... F-77
Table F-31. Summary of Chronic Aquatic Toxicity Results ..... F-79
Table F-32. Summary of Final Effluent Limitations for Discharge Point No. 001 ..... F-85
Table F-33. Summary of Final Effluent Limitations for Discharge Point No. 002 ..... F-86

## ATTACHMENT F – FACT SHEET

As described in section II of this Order, this Fact Sheet includes the legal requirements and technical rationale that serve as the basis for the requirements of this Order.

This Order has been prepared under a standardized format to accommodate a broad range of discharge requirements for Dischargers in California. Only those sections or subsections of this Order that are specifically identified as "not applicable" have been determined not to apply to this Discharger. Sections or subsections of this Order not specifically identified as "not applicable" are fully applicable to this Discharger.

### I. PERMIT INFORMATION

The following table summarizes administrative information related to the facility.

**Table F-1. Facility Information**

| | |
|---|---|
| **WDID** | 5C500108001 |
| **Discharger** | City of Turlock |
| **Name of Facility** | Water Quality Control Facility |
| **Facility Address** | 901 S. Walnut Road |
| | Turlock, CA 95380 |
| | Stanislaus County |
| **Facility Contact, Title and Phone** | Dan Madden, Municipal Services Director, (209) 668-5590 |
| **Authorized Person to Sign and Submit Reports** | Dan Madden, Municipal Services Director, (209) 668-5590 |
| **Mailing Address** | 156 S. Broadway, Suite 270, Turlock, CA 95380 |
| **Billing Address** | Same as Mailing Address |
| **Type of Facility** | Publicly Owned Treatment Works (POTW) |
| **Major or Minor Facility** | Major |
| **Threat to Water Quality** | 1 |
| **Complexity** | A |
| **Pretreatment Program** | Y |
| **Reclamation Requirements** | Producer – 2.0 MGD of recycled water for cooling purposes to the Walnut Energy Center |
| **Facility Permitted Flow** | 20 million gallons per day (MGD) |
| **Facility Design Flow** | 20 MGD |
| **Watershed** | Middle San Joaquin – Lower Merced – Lower Stanislaus |
| **Receiving Water** | Harding Drain and San Joaquin River |
| **Receiving Water Type** | Manmade agricultural drain (Harding Drain) and inland surface water (San Joaquin River) |

**A.** The City of Turlock (hereinafter Discharger) is the owner and operator of the Water Quality Control Facility (hereinafter Facility), a POTW.

For the purposes of this Order, references to the "discharger" or "permittee" in applicable federal and state laws, regulations, plans, or policy are held to be equivalent to references to the Discharger herein.

**B.** The Facility discharges wastewater to Harding Drain, a water of the United States, and is currently regulated by Order No. 5-01-122 which was adopted on 11 May 2001 and expired on 1 May 2006. The terms and conditions of the Order No. 5-01-122 have been automatically continued and remain in effect until new Waste Discharge Requirements (WDRs) and National Pollutant Discharge Elimination System (NPDES) permit are adopted pursuant to this Order.

**C.** The Discharger petitioned the State Water Resources Control Board (State Water Board) to review the decision of the Regional Water Resources Control Board (Regional Water Board) regarding final adoption of Order No. 5-01-122 and the associated Cease and Desist Order (CDO) No. 5-01-123. In the petition, the Discharger objected to a number of limitations contained in the Order and CDO, contending that the requirements imposed by the Regional Water Board were unnecessary, overly stringent, and impossible to achieve without costly measures that will endanger the economic vitality of the Discharger's service area. To address the petition, the State Water Board adopted Order WQO 2002-0016 on 3 October 2002, remanding the Order and the CDO to the Regional Water Board for modifications. In WQO 2002-0016, the State Water Board concluded that the Regional Water Board must clarify and support beneficial use determinations for Harding Drain; include findings explaining reasonable potential determinations and calculation of effluent limitations; include compliance schedules in the permit when there is a basis for doing so; and impose appropriate temperature controls on the discharge based on a site-specific study. As a result, WQO 2002-0016 stayed effluent limitations for aluminum, copper, cyanide, zinc, bromodichloromethane, molybdenum, tributyltin, iron, ammonia, and manganese in Order No. 5-01-122; compliance schedules for copper, cyanide, zinc, and bromodichloromethane in Order No. 5-01-122; compliance schedules for aluminum and molybdenum in CDO No. 5-01-123; and the receiving water limitation for temperature in Order No. 5-01-122.

To address the technical issues that were raised in the petition and addressed in the remand, the Regional Water Board drafted a tentative Order for the discharge which was to be presented at the 22/23 April 2004 Board Meeting. However, on 5 March 2004, the Discharger submitted a request for deferral of issuance of the renewal Order and CDO for the discharge to Harding Drain. The Discharger requested deferral because of their intent to construct a pipeline by September 2006 that would move the location of discharge from Harding Drain to the San Joaquin River. The Discharger proposed to submit a Petition for Change with the State Water Board concurrent with a new Report of Waste Discharge (ROWD) in April 2004 for the Regional Water Board to prepare a tentative draft for the direct discharge to the San Joaquin River.

**D.** The Discharger filed a ROWD and submitted an application for renewal of its WDRs and NPDES permit on 27 April 2004. Although the Discharger expected to complete the

certification of an Environmental Impact Report (EIR) by September 2004 to satisfy obligations under the California Environmental Quality Act (CEQA) for the change in discharge location, the EIR was not certified until May 2005. The Discharger petitioned the State Water Board for change in the point of discharge on 13 July 2005 (Wastewater Change Petition W-44) which was approved on 7 July 2006. Subsequent to a permit from the Army Corps of Engineers, the Discharger intends to put out a bid for the project and commence construction as soon as possible. The schedule for construction is approximately 18 months.

**E.** Supplemental application information was requested on 13 June 2008 and was received on 16 July 2008. The application was deemed complete on 18 July 2008.

## II. FACILITY DESCRIPTION

The Facility is a regional facility. The Discharger provides sewerage service for the City of Turlock and the community service districts of Keyes and Denair and receives primary treated effluent from the City of Ceres. The Facility serves a population of approximately 78,179 people and 10 significant industrial users (SIUs). The design daily average flow capacity of the Facility is 20 MGD.

### A. Description of Wastewater and Biosolids Treatment or Controls

The treatment system at the Facility consists of screening, primary treatment (flotation), secondary treatment (activated sludge) that includes biotowers, aeration and nitrification (waste solids are treated via a gravity belt thickener and anaerobic digestion), secondary clarification, high rate clarifier / thickener, cloth disk filters, and chlorine disinfection and sodium bisulfite dechlorination. The wastewater facilities also include a 37.2 million gallon earthen emergency storage basin, which allows the diversion and storage of primary effluent if necessary. The emergency storage basin was constructed with a 6-inch bentonite liner on the bottom and sides. The basin is used for the temporary storage of influent wastes that may cause treatment plant upsets or to hold effluent wastewater that may not meet effluent permit limitations. Wastewater from the basin is recycled to the treatment plant as conditions allow. Biosolids generated are reused in agricultural land application and for public distribution.

The Discharger currently provides 2.0 MGD of recycled water for cooling purposes to the Walnut Energy Center, a 250 Megawatt power plant owned and operated by the Turlock Irrigation District. The Discharger also provides recycled water to the Pedretti Sports Complex for irrigation purposes. Additionally, the Discharger has laid infrastructure (purple pipe) in a number of newer developments and park space for future use of recycled water on landscape and possible dual plumbed water systems. ~~The Discharger anticipates using recycled water for landscape purposes at their 20 acre Sports Complex in the summer of 2009.~~

### B. Discharge Points and Receiving Waters

1. The Facility is located in Section 21, T5S, R10E, MDB&M, as shown in Attachment B, a part of this Order.

2. Currently, treated municipal and industrial wastewater is discharged from Discharge Point No. 001 to Harding Drain [also known as the Turlock Irrigational District (TID) Lateral 5 Canal], a water of the United States, at a point Latitude 37° 27' 50" N and Longitude 120° 55' 52" W, which is tributary to the San Joaquin River approximately 5 miles downstream of the discharge point. Harding Drain is a man-made agricultural drainage facility designed and maintained by TID for drainage purposes. In addition to the effluent from the Facility, Harding Drain carries flows from TID operational spill water, tailwater from row and orchard crops, municipal storm water, and other runoff.

3. The Discharger is currently planning to construct a dedicated pipeline to transport and discharge treated wastewater from the Facility directly to the San Joaquin River through Discharge Point No. 002. The approximate location of the proposed Discharge Point No. 002 in the San Joaquin River, a water of the United States, is at a point Latitude 37° 27' 47" N and Longitude 120° 01' 57" W. Discharge Point No. 002 will be located approximately 500 feet upstream in the San Joaquin River from the confluence of the Harding Drain and the San Joaquin River.

## C. Summary of Existing Requirements and Self-Monitoring Report (SMR) Data

Effluent limitations contained in Order No. 5-01-122 for discharges from Discharge Point No. 001 (Monitoring Location EFF-001) and representative monitoring data from the term of Order No. 5-01-122 are as follows:

**Table F-2. Historic Effluent Limitations and Monitoring Data**

| Parameter | Units | Effluent Limitation | | | Monitoring Data (From June 2001 – April 2008) | | |
|---|---|---|---|---|---|---|---|
| | | Average Monthly | Average Weekly | Maximum Daily | Highest Average Monthly Discharge | Highest Average Weekly Discharge | Highest Daily Discharge |
| Biochemical Oxygen Demand (5-day @ 20°C) | mg/L | 30[1] | 45[1] | 90[1] | 14.67 | 21.14 | 40 |
| | | 10[2] | 15[2] | 20[2] | 3.13 | 5.43 | 10 |
| | lbs/day[3] | 5,004[1] | 7,506[1] | 15,012[1] | 1,200 | 1,642 | 2,602 |
| | | 1,668[2] | 2,502[2] | 3,336[2] | 305 | 514 | 851 |
| | % Removal | 85 | -- | -- | 98.37[4] | -- | -- |
| Total Suspended Solids | mg/L | 30[1] | 45[1] | 90[1] | 25.13 | 47.29 | 106 |
| | | 10[2] | 15[2] | 20[2] | 6.26 | 10.57 | 25 |
| | lbs/day | 5,004[1] | 7,506[1] | 15,012[1] | 2,312 | 3,284 | 5,746 |
| | | 1,668[2] | 2,502[2] | 3,336[2] | 629 | 993 | 1,856 |
| | % Removal | 85 | -- | -- | 96.94[4] | -- | -- |
| Settleable Solids | mL/L | 0.1 | -- | 0.2 | 0.26 | -- | 4.0 |
| Total Coliform Organisms | MPN/100 mL | 23[1,5] | -- | 500[1] | 113 | -- | 1,600 |
| | | 2.2[2,5] | -- | 240[2,6] | -- | -- | 64 |
| Turbidity | NTU | -- | -- | 2[2,7] | -- | -- | 9.96 |

| Parameter | Units | Effluent Limitation | | | Monitoring Data (From June 2001 – April 2008) | | |
|---|---|---|---|---|---|---|---|
| | | Average Monthly | Average Weekly | Maximum Daily | Highest Average Monthly Discharge | Highest Average Weekly Discharge | Highest Daily Discharge |
| Oil & Grease | mg/L | 10 | -- | 15 | 9.15 | -- | 11.0 |
| | lbs/day[3] | 1,668 | -- | 2,502 | 824 | -- | 991 |
| Iron | µg/L | 300[8] | -- | -- | -- | -- | -- |
| | lbs/day[3] | 50.0[8] | -- | -- | -- | -- | -- |
| Manganese | µg/L | 50[8] | -- | -- | -- | -- | -- |
| | lbs/day[3] | 8.34[8] | -- | -- | -- | -- | -- |
| Molybdenum | µg/L | 10[8] | -- | 15[8] | -- | -- | -- |
| | lbs/day[3] | 1.67[8] | -- | 2.50[8] | -- | -- | -- |
| Copper | µg/L | -- | -- | 88[1,8] | -- | -- | -- |
| | | 4.50[2,8] | -- | 10.90[2,8] | -- | -- | -- |
| | lbs/day[3] | -- | -- | 14.7[1,8] | -- | -- | -- |
| | | 0.750[2,8] | -- | 1.82[2,8] | -- | -- | -- |
| Cyanide | µg/L | -- | -- | 33[1,8] | -- | -- | -- |
| | | 4.25[2,8] | -- | 8.52[2,8] | -- | -- | -- |
| | lbs/day[3] | -- | -- | 5.5[1,8] | -- | -- | -- |
| | | 0.710[2,8] | -- | 1.42[2,8] | -- | -- | -- |
| Zinc | µg/L | -- | -- | 900[1,8] | -- | -- | -- |
| | | 31.50[2,8] | -- | 93.80[2,8] | -- | -- | -- |
| | lbs/day[3] | -- | -- | 150.1[1,8] | -- | -- | -- |
| | | 5.25[2,8] | -- | 15.6[2,8] | -- | -- | -- |
| Bromodichloromethane | µg/L | -- | -- | 3.25[1,8] | -- | -- | -- |
| | | 0.56[2,8] | -- | 1.13[2,8] | -- | -- | -- |
| | lbs/day[3] | -- | -- | 0.54[1,8] | -- | -- | -- |
| | | 0.09[2,8] | -- | 0.19[2,8] | -- | -- | -- |
| Aluminum | µg/L | 87[8] | -- | 750[8] | -- | -- | -- |
| | lbs/day[3] | 14.5[8] | -- | 125[8] | -- | -- | -- |
| Tributyltin | µg/L | 0.063[8] | -- | 0.46[8] | -- | -- | -- |
| | lbs/day[3] | 0.01[8] | -- | 0.077[8] | -- | -- | -- |
| Ammonia as N | µg/L | [8,9] | -- | [8,10] | -- | -- | -- |
| | lbs/day[3] | [8,11] | -- | [8,11] | -- | -- | -- |
| Chlorine, Total Residual | mg/L | 0.01 | -- | 0.02 | <0.01 | -- | 0.002 |
| Dissolved Oxygen | mg/L | -- | -- | 5[1,12] | -- | -- | 3[4] |
| | | -- | -- | 7.5[2,12] | -- | -- | 6.6[4] |
| Electrical Conductivity @ 25°C | µmhos/cm | 1,100[13] | -- | -- | 953 | -- | -- |
| Total Dissolved Solids | mg/L | 690[13] | -- | -- | 635 | -- | -- |
| | lbs/year | [14] | -- | -- | -- | -- | -- |
| pH | standard units | -- | -- | 6.5 – 8.5 | -- | -- | 4.7 – 9.1 |
| Average Dry Weather Flow | MGD | 20 | -- | -- | -- | -- | -- |
| Acute Toxicity | % Survival | [15] | -- | -- | -- | -- | -- |

| Parameter | Units | Effluent Limitation | | | Monitoring Data (From June 2001 – April 2008) | | |
|---|---|---|---|---|---|---|---|
| | | Average Monthly | Average Weekly | Maximum Daily | Highest Average Monthly Discharge | Highest Average Weekly Discharge | Highest Daily Discharge |

[1] Interim limitation effective until 1 May 2006.
[2] Final limitation effective 1 May 2006.
[3] Based on a design flow of 20 MGD.
[4] Represents the lowest observed value.
[5] Applied as a monthly median effluent limitation.
[6] In a 30-day period, only a single sample may exceed 23 MPN/100 mL and no sample should exceed 240 MPN/100 mL.
[7] The daily maximum of 5 NTU must not be exceeded 5% of the time or 10 NTU at any time within a 24-hour period. The daily average must not exceed 2 NTU.
[8] Effluent limitations stayed by State Water Board Order WQO 2002-0016.
[9] Floating effluent limitations calculated in accordance with Attachment B of Order No. 5-01-122.
[10] Floating effluent limitations calculated in accordance with Attachment C of Order No. 5-01-122.
[11] Using the value, in mg/L, determined from Attachment B or C of Order No. 5-01-122 as appropriate, calculate lbs/day using the formula: z mg/L x 8.345 x 0.62 MGD = y lbs/day.
[12] The discharge shall meet or exceed the applicable concentration.
[13] Interim effluent limitations effective for the permit term.
[14] The interim effluent limitation for total dissolved solids included an annual maximum of 42,000,000 lbs/year.
[15] Survival of aquatic organisms in 96-hour bioassays of undiluted waste shall be no less than:
Minimum for any one bioassay---------- 70%
Median for any three or more consecutive bioassays ----- 90%

## D. Compliance Summary

1. A number of Compliance Evaluation Inspections (CEIs) were conducted during the previous permit term (17 March 2003, 27 October 2003, 9 December 2004, and 30 October 2007). The following table summarizes permit effluent limitation exceedances that were identified during the 9 December 2004 CEI.

**Table F-3. Summary of Effluent Limitation Exceedances During 9 December 2004 CEI**

| Date | Parameter | Value | Permit Requirement |
|---|---|---|---|
| 7 February 2004 | Settleable Solids (Daily Maximum) | 1.0 mL/L | 0.2 mL/L |
| 1 July 2004 | Total Coliform Organisms (Daily Maximum) | >1,600 MPN/100 mL | 500 MPN/100 mL |
| 24 July 2004 | Settleable Solids (Daily Maximum) | 0.30 mL/L | 0.2 mL/L |

## E. Planned Changes

The Discharger is planning to construct a dedicated pipeline to transport and discharge treated wastewater from the Facility directly to the San Joaquin River from Discharge Point No. 002. The Discharger's EIR for the project was certified in May 2005. The Discharger petitioned the State Water Board for change in the point of discharge on 13 July 2005 (Wastewater Change Petition W-44) which was approved on 7 July 2006.

The Discharger is currently awaiting a permit from the Army Corps of Engineers. Once a permit from the Army Corps of Engineers has been issued, the Discharger intends to put out a bid for the project with construction commencing thereafter. The schedule for construction is approximately 18 months. The proposed location of Discharge Point No. 002 is approximately 500 feet upstream in the San Joaquin River from the confluence of Harding Drain and the San Joaquin River.

## III. APPLICABLE PLANS, POLICIES, AND REGULATIONS

The requirements contained in this Order are based on the applicable plans, policies, and regulations identified in section II of the Limitations and Discharge Requirements (Findings). This section provides supplemental information, where appropriate, for the plans, policies, and regulations relevant to the discharge.

### A. Legal Authority

See Limitations and Discharge Requirements - Findings, Section II.C.

### B. California Environmental Quality Act (CEQA)

See Limitations and Discharge Requirements - Findings, Section II.E.

### C. State and Federal Regulations, Policies, and Plans

1. **Water Quality Control Plans**. The Regional Water Board adopted a *Water Quality Control Plan, Fourth Edition (Revised October 2007), for the Sacramento and San Joaquin River Basins* that designates beneficial uses, establishes water quality objectives, and contains implementation programs and policies to achieve those objectives for all waters addressed through the plan. In addition, State Water Board Resolution No. 88-63 requires that, with certain exceptions, the Regional Water Board assign the municipal and domestic supply use to water bodies that do not have beneficial uses listed in the Basin Plan.

   The beneficial uses of the San Joaquin River from the mouth of the Merced River to Vernalis, downstream of the discharge to Harding Drain from Discharge Point No. 001 and to which the Discharger proposes to discharge from Discharge Point No. 002, are municipal and domestic supply (potential); agricultural irrigation, including stock watering; industrial process water supply; water contact recreation, including canoeing and rafting; other non-contact water recreation; warm freshwater aquatic habitat; warm fish migration habitat; cold fish migration habitat; warm spawning habitat; wildlife habitat.

   The Basin Plan at page II-2.00 states that the "*…beneficial uses of any specifically identified water body generally apply to its tributary streams.*" The Discharger currently discharges to Harding Drain from Discharge Point No. 001. The Basin Plan does not specifically identify beneficial uses for Harding Drain, but does identify present and potential uses for the San Joaquin River from the mouth of the Merced

River to Vernalis, to which Harding Drain is tributary. While flow in Harding Drain is tributary to the San Joaquin River, Harding Drain itself is a constructed agricultural drain. The Regional Water Board finds that Harding Drain is not a "stream" as used in the Basin Plan's tributary language, and as a constructed agricultural drain, the Harding Drain is not subject to the tributary provisions of the Basin Plan. Therefore, although Harding Drain is a water of the United States, the Regional Water Board has not designated beneficial uses of Harding Drain in the Basin Plan. The beneficial uses of Harding Drain are therefore identified by other statutory designations and/or the actual existing beneficial uses of the receiving water.

The Basin Plan on page II-1.00 states: "*Protection and enhancement of existing and potential beneficial uses are primary goals of water quality planning…*" and with respect to disposal of wastewaters states that "...*disposal of wastewaters is [not] a prohibited use of waters of the State; it is merely a use which cannot be satisfied to the detriment of beneficial uses.*"

The federal CWA section 101(a)(2), states: "*it is the national goal that wherever attainable, an interim goal of water quality which provides for the protection and propagation of fish, shellfish, and wildlife, and for recreation in and on the water be achieved by July 1, 1983.*" Federal Regulations, developed to implement the requirements of the CWA, create a rebuttable presumption that all waters be designated as fishable and swimmable. Federal Regulations at title 40, Code of Federal Regulations section 131.2 (40 CFR 131.2) and 40 CFR 131.10, require that all waters of the State regulated to protect the beneficial uses of public water supply, protection and propagation of fish, shell fish and wildlife, recreation in and on the water, agricultural, industrial and other purposes including navigation. 40 CFR 131.3(e) defines existing beneficial uses as those uses actually attained after 28 November 1975, whether or not they are included in the water quality standards. Federal Regulation, 40 CFR 131.10 requires that uses be obtained by implementing effluent limitations, requires that all downstream uses be protected and states that in no case shall a state adopt waste transport or waste assimilation as a beneficial use for any waters of the United States.

Therefore, in reviewing what existing beneficial uses apply to Harding Drain, the Regional Water Board has considered the following facts:

a. Municipal and Domestic Supply (MUN)

   The Basin Plan defines MUN as "*Uses of water for community, military, or individual water supply systems including, but not limited to, drinking water supply.*" Flows in Harding Drain, can, at times, consist solely of treated effluent and/or agricultural tailwater. These flow and water quality concerns would likely preclude direct MUN use. Flows in Harding Drain may provide, at times, recharge of local groundwater which is used for MUN. However, there is no evidence that Harding Drain downstream of the discharge is currently or was previously used for MUN. It is also unknown whether MUN is attainable for Harding Drain in the foreseeable future.

For surface waters, at page II-2.00, the Basin Plan states, "*Water bodies within the basins that do not have beneficial uses designated in Table II-1 are assigned MUN designations in accordance with the provisions of State Water Board Resolution No. 88-63 Sources of Drinking Water Policy, which is, by reference, a part of this Basin Plan.*" The Basin Plan further states, "*In making any exemptions to the beneficial use designation of MUN, the Regional Water Board will apply the exceptions listed in Resolution 88-63…*" Resolution No. 88-63 states that, "*All surface and ground waters of the State are considered to be suitable, or potentially suitable, for municipal or domestic water supply and should be so designated by the Regional Boards with the exception of:…2. Surface waters where: …b. The water is in systems designed or modified for the primary purpose of conveying or holding agricultural drainage waters, provided that the discharge from such systems is monitored to assure compliance with all relevant water quality objectives as required by the Regional Boards.*" Harding Drain is a "water of the State" and, therefore, is subject to Resolution No. 88-63.

While Harding Drain appears to meet the exceptions of Resolution No. 88-63, the State Water Board found in Order WQO 2002-0015 (Vacaville) that "*…Resolution 88-63 did not itself designate uses for any waterbody. Rather, the resolution established a state policy that the Regional Boards were required to implement in their basin plans.*" The Regional Water Board implemented Resolution No. 88-63 through a blanket MUN designation for all unidentified waterbodies in the region. Having made the designation, the Regional Water Board is required to go through another rulemaking process to change the designation.

In January 2004, Tetra Tech Inc. under contract with USEPA, submitted a Draft Final Use Attainability Analysis (UAA) for Harding Drain Report. The Draft Final Report summarizes results of a study and assessment conducted by Tetra Tech Inc. regarding the beneficial uses of Harding Drain. Concerning the MUN use, the Draft Final Report notes that "*Effluent and drain data provided by the City suggested that water quality supported MUN however available data were limited to one sampling event in June 2002…*" The Draft Final Report notes that, based upon current information, "*…MUN does not exist in the Harding Drain…"* and that "*The major impediments to attaining MUN use for the Harding Drain are the lack of natural flow that consist of agricultural return water and effluent from the wastewater treatment plant."* The Draft Final Report concludes that "*Given the other sources available in this area, Harding Drain is not a likely source of drinking water.*"

However, until or unless a Basin Plan amendment is completed to change the MUN designation, the MUN use applies to Harding Drain. MUN is identified in the Basin Plan as a potential beneficial use of the San Joaquin River downstream of the discharge from Discharge Point No. 001. Any Basin Plan amendment process which considers dedesignating the MUN beneficial use of Harding Drain would also have to consider the impacts on this use in the San Joaquin River.

b. Agricultural Supply (AGR)

The Basin Plan defines AGR as "*Uses of water for farming, horticulture, or ranching including, but not limited to, irrigation…stock watering, or support of vegetation for range grazing.*" Harding Drain is a part of the TID canal system, which is a system designed to convey and supply irrigation water to end users and also convey excess agricultural irrigation water and tailwater to the San Joaquin River. Harding Drain receives excess irrigation water as operational spills, in addition to tailwater and wastewater effluent. Irrigators have been observed drawing water from Harding Drain downstream of the discharge point for irrigation uses. Currently, there are no crops for direct human consumption grown in the farmlands surrounding the drain, and it does not appear water from Harding Drain is currently used for irrigation of crops for direct human consumption (unrestricted irrigation). It is unknown whether waters of Harding Drain may have been used at any point since 28 November 1975 for unrestricted irrigation. However, the desire to produce food crops for direct human consumption using waters from Harding Drain may change in the future. As noted in the Draft Final Report, "*Pastures or agricultural fields are located within 10 meters of the stream on both sides for its entire length.*"

A use is considered "existing" under USEPA's water quality standards regulations if, since 28 November 1975, the use was actually realized, or water quality conditions were suitable to allow the uses to occur. Results of monitoring conducted by the Discharger indicate there have been occasions when the water in Harding Drain was suitable for unrestricted irrigation. Results of monitoring indicate effluent total coliform concentrations are consistently less than 23 MPN/100 mL. Effluent electrical conductivity levels have been recorded as low as 690 µmhos/cm (29 January 2008), and results of upstream monitoring in Harding Drain at RSW-001 indicate an average electrical conductivity levels of 450 µmhos/cm and have been as low as 96 µmhos/cm.

Therefore, considering these facts, the Regional Water Board considers AGR, including unrestricted irrigation, as an existing use in Harding Drain. AGR is identified in the Basin Plan as an existing beneficial use of the San Joaquin River downstream of the discharge from Discharge Point No. 001. Any Basin Plan amendment process which considers dedesignating the AGR beneficial use of Harding Drain would also have to consider the impacts on this use in the San Joaquin River.

c. Industrial Service Supply (IND)

The Basin Plan defines IND as "*Uses of water for industrial activities that do not depend primarily on water quality including, but not limited to, mining, cooling water supply, hydraulic conveyance, gravel washing, fire protection, or oil well repressurization."* No known industrial supply water intakes or industrial uses are located along the length of Harding Drain from the point of discharge to the San Joaquin River. Whether waters of Harding Drain are suitable for the IND use is unknown since a specific industrial use has not been identified. IND is not

identified as an existing use of the San Joaquin River. No effluent limitations in this Order are associated with protection of this beneficial use. It will be necessary for the Regional Water Board to reconsider the existing use of the Harding Drain as a source of industrial service supply water in future renewals of this Order.

d. Industrial Process Supply (PRO)

The Basin Plan defines PRO as "*Uses of water for industrial activities that depend primarily on water quality.*" PRO is a beneficial use of the San Joaquin River. However, as noted for IND, no known industrial supply water intakes or industrial uses are located along the length of Harding Drain from the point of discharge to the San Joaquin River. Whether waters of Harding Drain are suitable for the PRO use is unknown since a specific industrial use has not been identified. No effluent limitations in this Order are associated with protection of this beneficial use. It will be necessary for the Regional Water Board to reconsider the existing use of the Harding Drain as a source of industrial process supply water in future renewals of this Order.

e. Water Contact Recreation (REC-1) and Non-Contact Water Recreation (REC-2)

The Basin Plan defines REC-1 as "*Uses of water for recreational activities involving body contact with water, where ingestion of water is reasonably possible. These uses include, but are not limited to swimming, wading, water skiing, skin and scuba diving, surfing, white water activities, fishing, or use of natural hot springs.*" REC-2 is defined as "*Uses of water for recreational activities involving proximity to water, but where there is generally no body contact with water, nor any likelihood of ingestion of water.*" There is ready public access to Harding Drain. Exclusion of the public is unrealistic, and potential for contact recreational activities exists along Harding Drain as it flows to the San Joaquin River, and these recreational uses are likely to increase as the population in the area grows. Furthermore, Regional Water Board staff has conducted inspections along the entire length of Harding Drain from the point of discharge to the confluence of the San Joaquin River. During these inspections, recreational users were observed wading in and fishing along Harding Drain. In addition, section 101(a)(2) of the CWA requires that water quality for the protection and propagation of fish, shellfish, and wildlife, and for recreation in and on the water be achieved, whenever attainable. Federal water quality standards regulations implementing the CWA create a rebuttable presumption that all waters should be designated as fishable/swimmable. Whether these recreational uses of Harding Drain may be considered seasonal is unknown. However, removal or establishment of a sub-category of these uses would require completion of a UAA and Basin Plan amendment.

Because of the public access, observations of Regional Water Board staff, and fishable/swimmable presumption of the federal regulations, this Order considers REC-1 and REC-2 as existing beneficial uses of Harding Drain.

f. Groundwater Recharge (GWR)

The Basin Plan defines GWR as "*Uses of water for natural or artificial recharge of ground water for purposes of future extraction, maintenance of water quality, or halting of saltwater intrusion into freshwater aquifers."* In areas and at times of the year where groundwater elevations are below the bottom of Harding Drain, water from the drain will percolate to groundwater. Since the drain is at times low in flow, it is reasonable to assume that the drain water is lost by evaporation, flow downstream, and percolation to groundwater providing a source of groundwater recharge to the domestic, municipal, and irrigation water supply used by farmers in the vicinity of the drain. This Order considers GWR as an existing use of Harding Drain.

g. Freshwater Replenishment (FRSH)

The Basin Plan defines FRSH as "*Uses of water for natural or artificial maintenance of surface water quantity or quality.*" When water is present in Harding Drain, there is hydraulic continuity between Harding Drain and the San Joaquin River. During periods of hydraulic continuity, Harding Drain adds to the water quantity and may impact the quality of water flowing downstream in the San Joaquin River. Therefore, this Order considers FRSH as an existing use of Harding Drain.

h. Warm Freshwater Habitat (WARM)

The Basin Plan defines WARM as "*Uses of water that support warm water ecosystems including, but not limited to, preservation or enhancement of aquatic habitats, vegetation, fish, or wildlife, including invertebrates.*" During site visits along Harding Drain, Regional Water Board staff observed fishing downstream of the discharge. Aquatic life suited to the WARM use was also observed in Harding Drain including crayfish, minnows, and frogs. These observations indicate that waters of Harding Drain are suitable for the WARM use. As noted previously, section 101(a)(2) of the CWA requires that water quality for the protection and propagation of fish, shellfish, and wildlife, and for recreation in and on the water be achieved, whenever attainable. Federal water quality standards regulations implementing the CWA create a rebuttable presumption that all waters should be designated as fishable/swimmable. Furthermore, the Draft Final Report found that "*The data collection efforts found direct evidence that Harding Drain supported warm water species and wildlife habitat…*" and "*…WARM aquatic life use does exist given the definition of the use in the Basin Plan.*" Therefore, this Order considers WARM as an existing use of Harding Drain.

i. Cold Freshwater Habitat (COLD)

The Basin Plan defines COLD as "*Uses of water that support cold water ecosystems including, but not limited to, preservation or enhancement of aquatic habitats, vegetation, fish, or wildlife, including invertebrates.*" As noted above,

section 101(a)(2) of the CWA requires that water quality for the protection and propagation of fish, shellfish, and wildlife, and for recreation in and on the water be achieved, whenever attainable. Federal water quality standards regulations implementing the CWA create a rebuttable presumption that all waters should be designated as fishable/swimmable. In requiring a State to consider protection and propagation of fish, shellfish, and wildlife, the federal regulations do not distinguish between WARM and COLD uses. While anadromous associated with cold freshwater habitat exist in the San Joaquin River, the flap gates at the confluence of Harding Drain and the San Joaquin River likely serve as barriers to movement of cold water species which might transition between the San Joaquin River and Harding Drain. Whether COLD exists or may be considered a seasonable use of Harding Drain is unknown. Results of effluent and receiving water monitoring conducted from January 2002 through October 2003 indicate average monthly dissolved oxygen concentrations have exceeded 7.0 mg/L for the majority of months monitored during this period.

In the Draft Final Report, it was found that "*Given all of the factors evaluated in this UAA, COLD use does not exist in Harding Drain due to several factors including unsuitable temperature regime, dominance of fine sediment particle size, low dissolved oxygen minima, lack of riffle areas, and poor instream cover. Harding Drain clearly does not meet the minimum suitable habitat thresholds for temperature and sediment size for most if not all salmonid life stages and cold water macroinvertebrates. Furthermore, the lack of suitable trout spawning and rearing areas throughout this stream would further constrain use of this stream by cold water fishes such as trout.*"

40 CFR 131.10(c) provides that "*States may adopt sub-categories of a use and set the appropriate criteria to reflect varying needs of such sub-categories of uses, for instance, to differentiate between cold water and warm water fisheries.*" However, removal or establishment of a sub-category of the fishable beneficial use like COLD would require completion of a UAA and Basin Plan amendment. Therefore, until or unless a Basin Plan amendment is completed to change the COLD designation, the COLD use applies to Harding Drain.

j. Migration of Aquatic Organisms (MIGR)

The Basin Plan defines MIGR as "*Uses of water that support habitats necessary for migration or other temporary activities by aquatic organisms, such as anadromous fish.*" MIGR, for both warm and cold habitats, is identified as an existing beneficial use of the San Joaquin River. The observation of crayfish, minnows, and frogs in Harding Drain during field inspections suggests that the drain supports at a minimum a warm water habitat necessary for temporary activities by various aquatic organisms. As noted for COLD, the flap gates at the confluence of Harding Drain and the San Joaquin River likely serve as barriers to movement of anadromous fish species which might transition between the San Joaquin River and Harding Drain. Whether the drain is or has been suitable to support habitats necessary to the migration of cold water aquatic organisms is unknown. However, removal or establishment of a sub-category of the MIGR

use would require completion of a UAA and Basin Plan amendment. Therefore, this Order considers both warm and cold MIGR as existing uses of Harding Drain.

k. Spawning, Reproduction, and/or Early Development (SPWN)

The Basin Plan defines SPWN as "*Uses of water that support high quality aquatic habitats suitable for reproduction and early development of fish.*" SPWN is identified as an existing beneficial use of the San Joaquin River. The observation of minnows in Harding Drain during field inspections suggests that the drain supports at minimum a warm water habitat necessary for reproduction and early development of fish. As noted for COLD, the flap gates at the confluence of Harding Drain and the San Joaquin River likely serve as barriers to movement of anadromous fish species which might transition between the San Joaquin River and Harding Drain. The Draft Final Report found that "…*SPWN does not exist for most relevant migratory species because of a number of factors including water quality (high temperatures and low minimum dissolved oxygen), habitat limitations (substrate size, percentage of pools, and substrate cover), and channel modification (extensive riparian alterations and constructed drain). In addition, the presence of physical barriers to fish migration… further limit Harding Drain as a viable spawning stream for anadromous and catadromous species.*" However, removal or establishment of a sub-category of the SPWN use would require completion of a UAA and Basin Plan amendment. Therefore, this Order considers both warm and cold SPWN as existing uses of Harding Drain.

l. Wildlife Habitat (WILD)

The Basin Plan defines WILD as "*Uses of water that support terrestrial or wetland ecosystems including, but not limited to, preservation and enhancement of terrestrial habitats or wetlands, vegetation, wildlife (e.g., mammals, birds, reptiles, amphibians, invertebrates), or wildlife water and food sources.*" WILD is identified as an existing beneficial use of the San Joaquin River. Based upon observations during field inspections, Harding Drain does provide riparian habitat at locations downstream of the discharge including areas of aquatic vegetation and wildlife habitat. Therefore, this Order considers WILD as an existing use of Harding Drain.

The Vacaville Order provided direction on implementing Basin Plan beneficial use designations and resulting limitations to protect these uses. Some of the issues addressed by the Vacaville Order may be relevant to the Discharger's situation. Specifically, there is information in the administrative record that indicates certain beneficial uses of Harding Drain, like MUN and COLD, may not exist and may not be attained in the future. Additionally, there is information that other beneficial uses, like AGR and REC-1, may exist seasonally. The appropriate mechanism for adding, removing, or establishing a sub-category of use is through a completed UAA and subsequent Basin Plan amendment process. A UAA is a structured scientific assessment of the factors affecting the attainment of the use which may include

physical, chemical, biological, and economic factors as described in 40 CFR 131.10(g). Because at times Harding Drain acts as a conduit for direct discharge to the San Joaquin River when little or no dilution of the treated effluent is available in the drain, the beneficial uses of the San Joaquin River must also be considered and protected. Any UAA or Basin Plan amendment process which considers changing or dedesignating beneficial uses of Harding Drain would also have to consider the impacts of this action on this use in the San Joaquin River. The Discharger bears the responsibility for providing the information to support this evaluation.

This Order contains effluent limitations requiring a tertiary level of treatment, or equivalent, which is necessary to protect the beneficial uses of the receiving water. The Regional Water Board has considered the factors listed in CWC section 13241 in establishing these requirements, as discussed in more detail in the Fact Sheet, Attachment F, IV.C.3.v.

2. **Bay-Delta Plan.** The *Water Quality Control Plan for the San Francisco Bay/Sacramento-San Joaquin Delta Estuary* (Bay-Delta Plan) was adopted in May 1995 by the State Water Board superseding the 1991 Bay-Delta Plan. The Bay-Delta Plan identifies the beneficial uses of the estuary and includes objectives for flow, salinity, and endangered species protection.

   The Bay-Delta Plan attempts to create a management plan that is acceptable to the stakeholders while at the same time is protective of beneficial uses of the San Joaquin River. The State Water Board adopted Decision 1641 (D-1641) on 29 December 1999. D-1641 implements flow objectives for the Bay-Delta Estuary, approves a petition to change points of diversion of the Central Valley Project and the State Water Project in the Southern Delta, and approves a petition to change places of use and purposes of use of the Central Valley Project. The water quality objectives of the Bay-Delta Plan are implemented as part of this Order.

3. **Antidegradation Policy.** 40 CFR 131.12 requires that the state water quality standards include an antidegradation policy consistent with the federal policy. The State Water Board established California's antidegradation policy in State Water Board Resolution No. 68-16. Resolution No. 68-16 incorporates the federal antidegradation policy where the federal policy applies under federal law. Resolution No. 68-16 requires that existing water quality be maintained unless degradation is justified based on specific findings. The Regional Water Board's Basin Plan implements, and incorporates by reference, both the State and federal antidegradation policies. As discussed in detail in the Fact Sheet (Attachment F, Section IV.D.4.) the discharge is consistent with the antidegradation provisions of 40 CFR 131.12 and State Water Board Resolution 68-16.

4. **Anti-Backsliding Requirements.** Sections 402(o)(2) and 303(d)(4) of the CWA and federal regulations at 40 CFR 122.44(l) prohibit backsliding in NPDES permits. These anti-backsliding provisions require that effluent limitations in a reissued permit must be as stringent as those in the previous permit, with some exceptions in which limitations may be relaxed. Compliance with the anti-backsliding requirements is discussed in Section IV.D.3.

5. **Emergency Planning and Community Right to Know Act**. Section 13263.6(a), California Water Code, requires that "*the Regional Water Board shall prescribe effluent limitations as part of the waste discharge requirements of a POTW for all substances that the most recent toxic chemical release data reported to the state emergency response commission pursuant to Section 313 of the Emergency Planning and Community Right to Know Act of 1986 (42 U.S.C. Sec. 11023) (EPCRA) indicate as discharged into the POTW, for which the State Water Board or the Regional Water Board has established numeric water quality objectives, and has determined that the discharge is or may be discharged at a level which will cause, have the reasonable potential to cause, or contribute to, an excursion above any numeric water quality objective*".

   The most recent toxic chemical data report does not indicate any reportable off-site releases or discharges to the collection system for this Facility. Therefore, a reasonable potential analysis based on information from EPCRA cannot be conducted. Based on information from EPCRA, there is no reasonable potential to cause or contribute to an excursion above any numeric water quality objectives included within the Basin Plan or in any State Water Board plan, so no effluent limitations are included in this permit pursuant to CWC section 13263.6(a).

   However, as detailed elsewhere in this Order, available effluent data indicate that there are constituents present in the effluent that have a reasonable potential to cause or contribute to exceedances of water quality standards and require inclusion of effluent limitations based on federal and state laws and regulations.

6. **Storm Water Requirements.** USEPA promulgated Federal Regulations for storm water on 16 November 1990 in 40 CFR Parts 122, 123, and 124. The NPDES Industrial Storm Water Program regulates storm water discharges from wastewater treatment facilities. Wastewater treatment plants are applicable industries under the storm water program and are obligated to comply with the Federal Regulations. The Discharger does not discharge storm water associated with an industrial activity off-site or into waters of the United States. The Discharger captures all storm water that falls within the boundary of the Facility and directs it to the in-plant drain. Therefore, the Discharger is not required to obtain coverage under the State Water Board's Industrial Stormwater General Permit (Order No. 97-03-DWQ).

7. **Endangered Species Act.** This Order does not authorize any act that results in the taking of a threatened or endangered species or any act that is now prohibited, or becomes prohibited in the future, under either the California Endangered Species Act (Fish and Game Code sections 2050 to 2097) or the Federal Endangered Species Act (16 U.S.C.A. sections 1531 to 1544). This Order requires compliance with effluent limits, receiving water limits, and other requirements to protect the beneficial uses of waters of the state. The Discharger is responsible for meeting all requirements of the applicable Endangered Species Act.

## D. Impaired Water Bodies on CWA 303(d) List

1. Under Section 303(d) of the 1972 Clean Water Act, states, territories and authorized tribes are required to develop lists of water quality limited segments. The waters on these lists do not meet water quality standards, even after point sources of pollution have installed the minimum required levels of pollution control technology. On 30 November 2006 USEPA gave final approval to California's 2006 Section 303(d) List of Water Quality Limited Segments. The Basin Plan references this list of Water Quality Limited Segments (WQLSs), which are defined as "…*those sections of lakes, streams, rivers or other fresh water bodies where water quality does not meet (or is not expected to meet) water quality standards even after the application of appropriate limitations for point sources (40 CFR 130, et seq.)*." The Basin Plan also states, "*Additional treatment beyond minimum federal standards will be imposed on dischargers to [WQLSs]. Dischargers will be assigned or allocated a maximum allowable load of critical pollutants so that water quality objectives can be met in the segment.*" The 2006 CWA section 303(d) listing for Harding Drain includes chlorpyrifos and unknown toxicity due to agriculture. The 2006 303(d) listing for the San Joaquin River from the Merced River to the Tuolumne River includes boron, DDT, electrical conductivity, Group A Pesticides, mercury, and unknown toxicity. Furthermore, the southern portion of the Sacramento – San Joaquin Delta downstream of the discharge is listed for chlorpyrifos, DDT, diazinon, electrical conductivity, exotic species, Group A pesticides, mercury, and unknown toxicity.

2. **Total Maximum Daily Loads (TMDL).** USEPA requires the Regional Water Board to develop total maximum daily loads (TMDLs) for each 303(d) listed pollutant and water body combination. TMDLs and Basin Plan amendments have been developed and adopted for diazinon and chlorpyrifos runoff and salt and boron in the lower San Joaquin River.

## E. Other Plans, Polices and Regulations

1. The discharge authorized herein and the treatment and storage facilities associated with the discharge of treated municipal wastewater, except for discharges of residual sludge and solid waste, are exempt from the requirements of Title 27, California Code of Regulations (CCR), section 20005 *et seq*. (hereafter Title 27). The exemption, pursuant to Title 27 CCR section 20090(a), is based on the following:

   a. The waste consists primarily of domestic sewage and treated effluent;

   b. The waste discharge requirements are consistent with water quality objectives; and

   c. The treatment and storage facilities described herein are associated with a municipal wastewater treatment plant.

2. The State Water Board adopted the *Water Quality Control Policy for the Enclosed Bays and Estuaries of California*. The requirements within this Order are consistent with the Policy.

## IV. RATIONALE FOR EFFLUENT LIMITATIONS AND DISCHARGE SPECIFICATIONS

Effluent limitations and toxic and pretreatment effluent standards established pursuant to Sections 301 (Effluent Limitations), 302 (Water Quality Related Effluent Limitations), 304 (Information and Guidelines), and 307 (Toxic and Pretreatment Effluent Standards) of the Clean Water Act (CWA) and amendments thereto are applicable to the discharge.

The Federal CWA mandates the implementation of effluent limitations that are as stringent as necessary to meet water quality standards established pursuant to state or federal law [33 U.S.C., § 1311(b)(1)(C); 40 CFR 122.44(d)(1)]. NPDES permits must incorporate discharge limits necessary to ensure that water quality standards are met. This requirement applies to narrative criteria as well as to criteria specifying maximum amounts of particular pollutants. Pursuant to Federal Regulations, 40 CFR 122.44(d)(1)(i), NPDES permits must contain limits that control all pollutants that "*are or may be discharged at a level which will cause, have the reasonable potential to cause, or contribute to an excursion above any state water quality standard, including state narrative criteria for water quality*." Federal Regulations, 40 CFR 122.44(d)(1)(vi), further provide that "[w]*here a state has not established a water quality criterion for a specific chemical pollutant that is present in an effluent at a concentration that causes, has the reasonable potential to cause, or contributes to an excursion above a narrative criterion within an applicable State water quality standard, the permitting authority must establish effluent limits.*"

The CWA requires point source discharges to control the amount of conventional, non-conventional, and toxic pollutants that are discharged into the waters of the United States. The control of pollutants discharged is established through effluent limitations and other requirements in NPDES permits. There are two principal bases for effluent limitations: 40 CFR 122.44(a) requires that permits include applicable technology-based limitations and standards, and 40 CFR 122.44(d) requires that permits include water quality-based effluent limitations (WQBELs) to attain and maintain applicable numeric and narrative water quality criteria to protect the beneficial uses of the receiving water where numeric water quality objectives have not been established. The Regional Water Board's Basin Plan, IV-21, contains an implementation policy ("Policy for Application of Water Quality Objectives") that specifies that the Regional Water Board "*will, on a case-by-case basis, adopt numerical limitations in orders which will implement the narrative objectives*." This Policy complies with 40 CFR 122.44(d)(1). With respect to narrative objectives, the Regional Water Board must establish effluent limitations using one or more of three specified sources, including (1) USEPA's published water quality criteria, (2) a proposed state criterion (*i.e.*, water quality objective) or an explicit state policy interpreting its narrative water quality criteria (*i.e.*, the Regional Water Board's "Policy for Application of Water Quality Objectives")(40 CFR 122.44(d)(1) (vi) (A), (B) or (C)), or (3) an indicator parameter. The Basin Plan contains a narrative objective requiring that: "*All waters shall be maintained free of toxic substances in concentrations that produce*

*detrimental physiological responses in human, plant, animal, or aquatic life*" (narrative toxicity objective). The Basin Plan requires the application of the most stringent objective necessary to ensure that surface water and groundwater do not contain chemical constituents, discoloration, toxic substances, radionuclides, or taste and odor producing substances that adversely affect beneficial uses. The Basin Plan states that material and relevant information, including numeric criteria, and recommendations from other agencies and scientific literature will be utilized in evaluating compliance with the narrative toxicity objective. The Basin Plan also limits chemical constituents in concentrations that adversely affect surface water beneficial uses. For waters designated as municipal, the Basin Plan specifies that, at a minimum, waters shall not contain concentrations of constituents that exceed Maximum Contaminant Levels (MCL) of CCR Title 22. The Basin Plan further states that, to protect all beneficial uses, the Regional Water Board may apply limits more stringent than MCLs.

## A. Discharge Prohibitions

1. As stated in section I.G of Attachment D, Standard Provisions, this Order prohibits bypass from any portion of the treatment facility. Federal Regulations, 40 CFR 122.41 (m), define "bypass" as the intentional diversion of waste streams from any portion of a treatment facility. This section of the Federal Regulations, 40 CFR 122.41 (m)(4), prohibits bypass unless it is unavoidable to prevent loss of life, personal injury, or severe property damage. In considering the Regional Water Board's prohibition of bypasses, the State Water Board adopted a precedential decision, Order No. WQO 2002-0015, which cites the Federal Regulations, 40 CFR 122.41(m), as allowing bypass only for essential maintenance to assure efficient operation.

2. The Discharger has requested the authorization for an emergency discharge to Harding Drain subsequent to the commencement of discharges to the San Joaquin River in the event of a power failure at the proposed pipeline pump station. In the event of a power failure at the pump station, the Discharger has the ability to cease the discharge of wastewater into the existing pipelines that will flow to the pump station. Consequently, the only flow that would need to be pumped is the volume of wastewater in the two existing pipelines at the time of the power outage. A weir is utilized to divert flows under normal conditions into the proposed pump station. In the event of a power outage at the pump station, incoming flow would overflow the weir into the existing pipelines and flow into Harding Drain until the liquid level in the pipeline reaches the elevation of the weir. At the current permitted flow of 20 MGD, approximately 1.68 million gallons would be discharged in the event of a power failure at the pump station.

   An alternative to the emergency bypass is use of an emergency generator to supply power to the pump stations in the event of a power failure. However, the purchase, permitting, and operation of an emergency generator would be very costly to the Discharger. Wastewater discharged as a result of a power failure at the pump station will be required to meet the effluent limitations contained in section IV.A.1 of the Order for discharges to Harding Drain at Discharge Point No. 001, which are protective of water quality in Harding Drain. Power failures are likely to occur infrequently and the

equalization of flow in the pipes will occur within minutes. Therefore, these infrequent and short-term emergency discharges are unlikely to negatively impact beneficial uses. Therefore, upon commencement of discharge to the San Joaquin River from Discharge Point No. 002, the discharge of wastewater to Harding Drain from Discharge Point No. 001 is prohibited except in the event of a power failure at the pipeline pump station.

## B. Technology-Based Effluent Limitations

### 1. Scope and Authority

Regulations promulgated in 40 CFR 125.3(a)(1) require technology-based effluent limitations for municipal dischargers to be placed in NPDES permits based on Secondary Treatment Standards or Equivalent to Secondary Treatment Standards.

The Federal Water Pollution Control Act Amendments of 1972 (PL 92-500) established the minimum performance requirements for POTWs [defined in section 304(d)(1)]. Section 301(b)(1)(B) of that Act requires that such treatment works must, as a minimum, meet effluent limitations based on secondary treatment as defined by the USEPA Administrator.

Based on this statutory requirement, USEPA developed secondary treatment regulations, which are specified in 40 CFR Part 133. These technology-based regulations apply to all municipal wastewater treatment plants and identify the minimum level of effluent quality attainable by secondary treatment in terms of biochemical oxygen demand ($BOD_5$), total suspended solids (TSS), and pH.

### 2. Applicable Technology-Based Effluent Limitations

a. **$BOD_5$ and TSS.** Federal Regulations, 40 CFR Part 133, establish the minimum weekly and monthly average level of effluent quality attainable by secondary treatment for $BOD_5$ and TSS. Tertiary treatment is necessary to protect the beneficial uses of the receiving stream and the final effluent limitations for $BOD_5$ and TSS are based on the technical capability of the tertiary process. $BOD_5$ is a measure of the amount of oxygen used in the biochemical oxidation of organic matter. The secondary and tertiary treatment standards for $BOD_5$ and TSS are indicators of the effectiveness of the treatment processes. The principal design parameter for wastewater treatment plants is the daily $BOD_5$ and TSS loading rates and the corresponding removal rate of the system. In applying 40 CFR Part 133 for weekly and monthly average $BOD_5$ and TSS limitations, the application of tertiary treatment processes results in the ability to achieve lower levels for $BOD_5$ and TSS than the secondary standards currently prescribed; therefore, consistent with Order No. 5-01-122, this Order includes 30-day average $BOD_5$ and TSS limitations of 10 mg/L, which are technically based on the capability of a tertiary system. In addition to the average weekly and average monthly effluent limitations, a daily maximum effluent limitation for $BOD_5$ and TSS is included in the Order to ensure that the treatment works are not organically

overloaded and operate in accordance with design capabilities. See Table F-4 for final technology-based effluent limitations required by this Order. In addition, 40 CFR 133.102, in describing the minimum level of effluent quality attainable by secondary treatment, states that the 30-day average percent removal shall not be less than 85 percent. If 85 percent removal of $BOD_5$ and TSS must be achieved by a secondary treatment plant, it must also be achieved by a tertiary (i.e., treatment beyond secondary level) treatment plant. This Order contains a limitation requiring an average of 85 percent removal of $BOD_5$ and TSS over each calendar month.

b. **pH.** Federal Regulations, 40 CFR Part 133, also establish technology-based effluent limitations for pH. The secondary treatment standards require the pH of the effluent to be no lower than 6.0 and no greater than 9.0 standard units.

c. **Flow.** The Facility is designed to provide a tertiary level of treatment for up to a design flow of 20 MGD. Therefore, this Order contains an average dry weather flow effluent limit of 20 MGD.

**Summary of Technology-based Effluent Limitations**
**Discharge Point Nos. 001 and 002**

**Table F-4. Summary of Technology-based Effluent Limitations**

| Parameter | Units | Effluent Limitations | | | | |
|---|---|---|---|---|---|---|
| | | Average Monthly | Average Weekly | Maximum Daily | Instantaneous Minimum | Instantaneous Maximum |
| Biochemical Oxygen Demand (5-day @ 20°C) | mg/l | 10 | 15 | 20 | -- | -- |
| | lbs/day[1] | 1,668 | 2,502 | 3,336 | -- | -- |
| | % Removal | 85 | -- | -- | -- | -- |
| Total Suspended Solids | mg/l | 10 | 15 | 20 | -- | -- |
| | lbs/day[1] | 1,668 | 2,502 | 3,336 | -- | -- |
| | % Removal | 85 | -- | -- | -- | -- |
| pH | standard units | -- | -- | -- | 6.0 | 9.0 |
| Flow | MGD | 20[2] | -- | -- | -- | -- |

[1] Based on a design flow of 20 MGD.
[2] Average dry weather flow.

## C. Water Quality-Based Effluent Limitations (WQBELs)

### 1. Scope and Authority

As specified in 40 CFR 122.44(d)(1)(i), permits are required to include WQBELs for pollutants (including toxicity) that are or may be discharged at levels that cause, have reasonable potential to cause, or contribute to an in-stream excursion above any state water quality standard. The process for determining reasonable potential

and calculating WQBELs when necessary is intended to protect the designated uses of the receiving water as specified in the Basin Plan, and achieve applicable water quality objectives and criteria that are contained in other state plans and policies, or any applicable water quality criteria contained in the CTR and NTR.

**2. Applicable Beneficial Uses and Water Quality Criteria and Objectives**

a. **Receiving Water.** Currently, treated municipal and industrial wastewater is discharged from Discharge Point No. 001 to Harding Drain, which is tributary to the San Joaquin River approximately 5 miles downstream of the discharge point. Harding Drain is a man-made agricultural drainage facility designed and maintained by TID for drainage purposes. In addition to the effluent from the Facility, Harding Drain carries flows from TID operational spill water, tailwater from row and orchard crops, municipal storm water, and other runoff.

The Discharger is planning to construct a dedicated pipeline to transport and discharge treated wastewater from the Facility directly to the San Joaquin River from Discharge Point No. 002. Discharge Point No. 002 is located approximately 500 feet upstream in the San Joaquin River from the confluence of Harding Drain and the San Joaquin River.

The beneficial uses of Harding Drain and the San Joaquin River are described above in Section III.C.1 of this Fact Sheet.

b. **Hardness-Dependent CTR Metals Criteria.**

The *California Toxics Rule* and the *National Toxics Rule* contain water quality criteria for seven metals that vary as a function of hardness. The lower the hardness the lower the water quality criteria. The metals with hardness-dependent criteria include cadmium, copper, chromium III, lead, nickel, silver, and zinc.

This Order has established the criteria for hardness-dependent metals based on the reasonable worst-case ambient hardness as required by the SIP[1], the CTR[2] and State Water Board Order No. WQO 2008-0008 (City of Davis). The SIP and the CTR require the use of "receiving water" or "actual ambient" hardness, respectively, to determine effluent limitations for these metals. (SIP, § 1.2; 40 CFR § 131.38(c)(4), Table 4, note 4.) The CTR does not define whether the term "ambient," as applied in the regulations, necessarily requires the consideration of upstream as opposed to downstream hardness conditions. In some cases, the hardness of effluent discharges changes the

[1] The SIP does not address how to determine the hardness for application to the equations for the protection of aquatic life when using hardness-dependent metals criteria. It simply states, in Section 1.2, that the criteria shall be properly adjusted for hardness using the hardness of the receiving water.

[2] The CTR requires that, for waters with a hardness of 400 mg/L (as $CaCO_3$), or less, the actual ambient hardness of the surface water must be used. It further requires that the hardness values used must be consistent with the design discharge conditions for design flows and mixing zones.

hardness of the ambient receiving water. Therefore, where reliable, representative data are available, the hardness value for calculating criteria can be the downstream receiving water hardness, after mixing with the effluent (Order WQO 2008-0008, p. 11). The Regional Water Board thus has considerable discretion in determining ambient hardness (*Id.*, p.10.).

The hardness values must also be protective under all flow conditions (*Id.*, pp. 10-11). As discussed below, scientific literature provides a reliable method for calculating protective hardness-dependent CTR criteria, considering all discharge conditions. This methodology produces criteria that ensure these metals do not cause receiving water toxicity, while avoiding criteria that are unnecessarily stringent.

i. **Reasonable Potential Analysis (RPA).** The SIP in Section 1.3 states, "The RWQCB shall…determine whether a discharge may: (1) cause, (2) have a reasonable potential to cause, or (3) contribute to an excursion above any applicable priority pollutant criterion or objective." Section 1.3 provides a step-by-step procedure for conducting the RPA. The procedure requires the comparison of the Maximum Effluent Concentration (MEC) and Maximum Ambient Background Concentration to the applicable criterion that has been properly adjusted for hardness. Unless otherwise noted, for the hardness-dependent CTR metals criteria the following procedures were followed for properly adjusting the criterion for hardness when conducting the RPA.

- For comparing the MEC to the applicable criterion, in accordance with the SIP, CTR, and Order WQO 2008-0008, the reasonable worst-case downstream hardness was used to adjust the criterion. In this evaluation the portion of the receiving water affected by the discharge is analyzed. For hardness-dependent criteria, the hardness of the effluent has an impact on the determination of the applicable criterion in areas in the receiving water affected by the discharge. Therefore, for this situation it is necessary to consider the hardness of the effluent in determining the applicable hardness to adjust the criterion. The procedures for determining the applicable criterion after proper adjustment using the reasonable worst-case downstream hardness is outlined in subsection ii. below.

- For comparing the Maximum Ambient Background Concentration to the applicable criterion, in accordance with the SIP, CTR, and Order WQO 2008-0008, the reasonable worst-case upstream hardness was used to adjust the criterion. In this evaluation the area outside the influence of the discharge is analyzed. For this situation, the discharge does not impact the upstream hardness. Therefore, the effect of the effluent hardness was not included in this evaluation.

a) **Discharge Point No. 001 (Harding Drain).** Upstream receiving water hardness data for Harding Drain is not available. The effluent hardness ranged from 89 mg/L to 140 mg/L (as $CaCO_3$), based on 30 samples from October 2006 to April 2008. Because Harding Drain is an effluent dominated stream and upstream hardness data is not available, the lowest hardness of the effluent (89 mg/L as $CaCO_3$) was used to represent a reasonable worst case receiving water hardness. Thus, for evaluating whether the MEC or Maximum Background Ambient Concentration exceeds the applicable criterion, the criterion was adjusted using a reasonable worst-case receiving water hardness of 89-mg/L (as $CaCO_3$).

b) **Discharge Point No. 002 (San Joaquin River).** The upstream receiving water hardness in the San Joaquin River ranged from 32 mg/L to 345 mg/L, based on 20 samples from May 2006 to April 2007. Thus, a minimum upstream receiving water hardness of 32 mg/L (as $CaCO_3$) represents the reasonable worst-case upstream hardness and was used to adjust the criterion when comparing the Maximum Background Ambient Concentration to the criterion for the discharge to the San Joaquin River at Discharge Point No. 002. For comparing the MEC to the applicable criterion, in accordance with the SIP, CTR, and Order WQO 2008-0008, the reasonable worst-case downstream hardness was used to adjust the criterion. The procedures for determining the applicable criterion after proper adjustment using the reasonable worst-case downstream hardness is outlined in subsection ii. below.

ii. **Effluent Concentration Allowance (ECA) Calculations.** A 2006 Study[1] developed procedures for calculating the effluent concentration allowance (ECA)[2] for CTR hardness-dependent metals. The 2006 Study demonstrated that it is necessary to evaluate all discharge conditions (e.g. high and low flow conditions) and the hardness and metals concentrations of the effluent and receiving water when determining the appropriate ECA for these hardness-dependent metals. Simply using the lowest recorded upstream receiving water hardness to calculate the ECA may result in over or under protective WQBELs.

The equation describing the total recoverable regulatory criterion, as established in the CTR, is as follows:

$$\text{CTR Criterion} = \text{WER} \times (e^{m[\ln(H)]+b}) \qquad \text{(Equation 1)}$$

Where:

[1] Emerick, R.W.; Borroum, Y.; & Pedri, J.E., 2006. California and National Toxics Rule Implementation and Development of Protective Hardness Based Metal Effluent Limitations. WEFTEC, Chicago, Ill.

[2] The ECA is defined in Appendix 1 of the SIP (page Appendix 1-2). The ECA is used to calculate WQBELs in accordance with Section 1.4 of the SIP

H = hardness (as $CaCO_3$)
WER = water-effect ratio
m, b = metal- and criterion-specific constants

In accordance with the CTR, the default value for the WER is 1. A WER study must be conducted to use a value other than 1. The constants "m" and "b" are specific to both the metal under consideration, and the type of total recoverable criterion (i.e., acute or chronic). The metal-specific values for these constants are provided in the CTR at paragraph (b)(2), Table 1.

The equation for the ECA is defined in Section 1.4, Step 2, of the SIP and is as follows:

$$ECA = C \quad (\text{when } C \leq B)^{1} \qquad \text{(Equation 2)}$$

Where

C = the priority pollutant criterion/objective, adjusted for hardness (see Equation 1, above)

B = the ambient background concentration

The 2006 Study demonstrated that the relationship between hardness and the calculated criteria is the same for some metals, so the same procedure for calculating the ECA may be used for these metals. The same procedure can be used for chronic cadmium, chromium III, copper, nickel, and zinc. These metals are hereinafter referred to as "Concave Down Metals". "Concave Down" refers to the shape of the curve represented by the relationship between hardness and the CTR criteria in Equation 1. Another similar procedure can be used for determining the ECA for acute cadmium, lead, and acute silver, which are referred to hereafter as "Concave Up Metals".

<u>ECA for Concave Down Metals</u> – For Concave Down Metals (i.e., chronic cadmium, chromium III, copper, nickel, and zinc) the 2006 Study demonstrates that when the effluent is in compliance with the CTR criteria and the upstream receiving water is in compliance with the CTR criteria, any mixture of the effluent and receiving water will always be in compliance with the CTR criteria. Therefore, based on any observed ambient background hardness, no receiving water assimilative capacity for metals (i.e., ambient background metals concentrations are at their respective CTR criterion) and the minimum effluent hardness, the ECA calculated using Equation 1 with a hardness equivalent to the minimum effluent hardness is protective under all discharge conditions (i.e., high and low dilution conditions and under all mixtures of effluent and receiving water as the effluent mixes with the

[1] The 2006 Study assumes the ambient background metals concentration is equal to the CTR criterion (i.e. C ≤ B)

receiving water). This is applicable whether the effluent hardness is less than or greater than the ambient background receiving water hardness.

The effluent hardness ranged from 89 mg/L to 140 mg/L (as $CaCO_3$), based on 30 samples from October 2006 to April 2008. Upstream receiving water hardness data for Harding Drain is not available. The upstream receiving water hardness in the San Joaquin River varied from 32 mg/L to 345 mg/L (as $CaCO_3$), based on 20 samples from May 2006 to April 2007. Using a hardness of 89 mg/L (as $CaCO_3$) to calculate the ECA for all Concave Down Metals will result in WQBELs that are protective under all potential effluent/receiving water mixing scenarios and under all known hardness conditions, as demonstrated in the example using copper for the San Joaquin River shown in Table F-5, below. This example assumes the following conservative conditions for the upstream receiving water:

- Upstream receiving water always at the lowest observed upstream receiving water hardness (i.e., 32 mg/L as $CaCO_3$)
- Upstream receiving water copper concentration always at the CTR criteria (i.e., no assimilative capacity).

As demonstrated in Table F-5, using a hardness of 89 mg/L (as $CaCO_3$) to calculate the ECA for Concave Down Metals ensures the discharge is protective under all discharge and mixing conditions. In this example, the effluent is in compliance with the CTR criteria and any mixture of the effluent and receiving water is in compliance with the CTR criteria. An ECA based on a lower hardness (e.g., lowest upstream receiving water hardness) would also be protective, but would result in unreasonably stringent effluent limits considering the known conditions. Therefore, in this Order the ECA for all Concave Down Metals has been calculated using Equation 1 with a hardness of 89 mg/L (as $CaCO_3$).

**Table F-5. ~~:~~ Copper ECA Evaluation**

| | | | |
|---|---|---|---|
| **Minimum Observed Effluent Hardness** | | | **89 mg/L (as $CaCO_3$)** |
| **Minimum Observed Upstream Receiving Water Hardness** | | | **32 mg/L (as $CaCO_3$)** |
| **Maximum Assumed Upstream Receiving Water Copper Concentration** | | | **3.7 µg/L[1]** |
| **Copper $ECA_{chronic}$[2]** | | | **8.4 µg/L** |
| **Effluent Fraction** | **Mixed Downstream Ambient Concentration** | | |
| | **Hardness[3] (mg/L) (as $CaCO_3$)** | **CTR Criteria[4] (µg/L)** | **Copper[5] (µg/L)** |
| 1% | 34.55 | 3.8 | 3.8 |
| 5% | 36.75 | 4.0 | 3.9 |
| 15% | 42.25 | 4.5 | 4.4 |

| | | | |
|---|---|---|---|
| 25% | 47.75 | 5.0 | 4.9 |
| 50% | 61.50 | 6.2 | 6.1 |
| 75% | 75.25 | 7.3 | 7.3 |
| 100% | 89 | 8.4 | 8.4 |

[1] Maximum assumed upstream receiving water copper concentration calculated using Equation 1 for chronic criterion at a hardness of **32 mg/L (as $CaCO_3$)**.

[2] ECA calculated using Equation 1 for chronic criterion at a hardness of **89 mg/L (as $CaCO_3$)**.

[3] Mixed downstream ambient hardness is the mixture of the receiving water and effluent hardness at the applicable effluent fraction.

[4] Mixed downstream ambient criteria are the chronic criteria calculated using Equation 1 at the mixed hardness.

[5] Mixed downstream ambient copper concentration is the mixture of the receiving water and effluent copper concentrations at the applicable effluent fraction.

ECA for Concave Up Metals – For Concave Up Metals (i.e., acute cadmium, lead, and acute silver), the 2006 Study demonstrates that due to a different relationship between hardness and the metals criteria, the effluent and upstream receiving water can be in compliance with the CTR criteria, but the resulting mixture may be out of compliance. Therefore, the 2006 Study provides a mathematical approach to calculate the ECA to ensure that any mixture of effluent and receiving water is in compliance with the CTR criteria (see Equation 3, below). The ECA, as calculated using Equation 3, is based on the reasonable worst-case ambient background hardness, no receiving water assimilative capacity for metals (i.e., ambient background metals concentrations are at their respective CTR criterion), and the minimum observed effluent hardness. The reasonable worst-case ambient background hardness depends on whether the effluent hardness is greater than or less than the upstream receiving water hardness. There are circumstances where the conservative ambient background hardness assumption is to assume that the upstream receiving water is at the highest observed hardness concentration. The conservative upstream receiving water condition as used in the Equation 3 below is defined by the term $H_{rw}$.

$$ECA = \left( \frac{m(H_e - H_{rw})\left(e^{m\{\ln(H_{rw})\}+b}\right)}{H_{rw}} \right) + e^{m\{\ln(H_{rw})\}+b} \qquad \text{(Equation 3)}$$

m, b = criterion specific constants (from CTR)

$H_e$ = minimum observed effluent hardness

$H_{rw}$ = minimum observed upstream receiving water hardness when the minimum effluent hardness is always greater than observed upstream receiving water hardness ($H_{rw} < H_e$)

-or-

maximum observed upstream receiving water hardness when the minimum effluent hardness is always less than observed upstream receiving water hardness ($H_{rw} > H_e$)[1]

A similar example as was done for the Concave Down Metals is shown for lead, a Concave Up Metal, in Tables F-6 ~~and~~ through F-8~~7~~, below. As previously mentioned, the minimum effluent hardness is 89 mg/L (as $CaCO_3$), while the upstream receiving water hardness ranged from 32 mg/L to 345 mg/L (as $CaCO_3$). In this case, the minimum effluent concentration is within the range of observed upstream receiving water hardness concentrations. Therefore, Equation 3 was used to calculate two ECAs, one based on the minimum observed upstream receiving water hardness (i.e., 2.5~~6~~ µg/L, see Table F-6) and one based on the maximum observed upstream receiving water hardness (i.e., 0.9 µg/L, see Table F-7). Using Equation 3, the lowest ECA results from using the maximum upstream receiving water hardness, the minimum effluent hardness, and assuming no receiving water capacity for lead (i.e., ambient background lead concentration is at the CTR chronic criterion).

However, because the maximum ambient hardness is significantly greater than the minimum observed effluent hardness, the assumption of no assimilative capacity results in unrealistically high ambient background metals concentrations that are not supported by the data. This results in an unreasonably low ECA, or in some cases even a negative ECA. The maximum upstream receiving water hardness is 345 mg/L (as $CaCO_3$), which corresponds to a chronic CTR criterion for total recoverable lead of 15~~.4~~ µg/L. Based on 26 samples in the receiving water, the maximum total lead concentration was only 1.52 µg/L, which demonstrates there is assimilative capacity under conditions when the hardness of the receiving water is high. Under these circumstances, the 2006 Study recommends an iterative approach for calculating the ECA assuming some assimilative capacity exists in the receiving water at the higher hardness concentrations. Therefore, the total recoverable lead ECA at the maximum observed receiving water hardness has been iteratively determined assuming the maximum observed upstream receiving water hardness, a maximum upstream total lead concentration of 1.52 µg/L, and the effluent at the minimum observed hardness. This results in a chronic ECA for total recoverable lead of 2.7 µg/L (see Table F-8).

Using Equation 3 to calculate the ECA for all Concave Up Metals, based on the minimum observed upstream receiving water hardness, will result in WQBELs that are protective under all potential effluent/receiving water mixing

[1] When the minimum effluent hardness falls within the range of observed receiving water hardness concentrations, Equation 3 is used to calculate two ECAs, one based on the minimum observed upstream receiving water hardness and one based on the maximum observed upstream receiving water hardness. The minimum of the two calculated ECAs represents the ECA that ensures any mixture of effluent and receiving water is in compliance with the CTR criteria.

scenarios and under all known hardness conditions, as demonstrated in Table F-8~~6~~, for lead. In this example, the effluent is in compliance with the CTR criteria and any mixture of the effluent and receiving water is in compliance with the CTR criteria. Use of a lower ECA (e.g., calculated based solely on the highest upstream receiving water hardness) is protective, but would lead to unreasonably stringent effluent limits considering the known conditions. Therefore, Equation 3 using the minimum observed upstream receiving water hardness has been used to calculate the ECA for all Concave Up Metals in this Order.

**Table F-6. ~~:~~ Lead ECA Evaluation**

| | | | |
|---|---|---|---|
| **Minimum Observed Effluent Hardness** | | | **89 mg/L (as $CaCO_3$)** |
| **Minimum Observed Upstream Receiving Water Hardness** | | | **32 mg/L (as $CaCO_3$)** |
| **Maximum Assumed Upstream Receiving Water Lead Concentration** | | | **0.8 µg/L[1]** |
| **Lead $ECA_{chronic}$[2]** | | | **2.5 µg/L** |
| **Effluent Fraction** | **Mixed Downstream Ambient Concentration** | | |
| | **Hardness[3] (mg/L) (as $CaCO_3$)** | **CTR Criteria[4] (µg/L)** | **Lead[5] (µg/L)** |
| 1% | 34.6 | 0.8 | 0.8 |
| 5% | 36.8 | 0.9 | 0.9 |
| 15% | 42.3 | 1.1 | 1.1 |
| 25% | 47.8 | 1.2 | 1.2 |
| 50% | 61.5 | 1.7 | 1.6 |
| 75% | 75.3 | 2.2 | 2.1 |
| 100% | 89.0 | 2.7 | 2.5 |

1 Minimum assumed upstream receiving water lead concentration calculated using Equation 1 for chronic criterion at a hardness of **32 mg/L (as $CaCO_3$)**.

2 ECA calculated using Equation 3 for chronic criteria.

3 Mixed downstream ambient hardness is the mixture of the receiving water and effluent hardness at the applicable effluent fraction.

4 Mixed downstream ambient criteria are the chronic criteria calculated using Equation 1 at the mixed hardness.

5 Mixed downstream ambient lead concentration is the mixture of the receiving water and effluent lead concentrations at the applicable effluent fraction.

**Table F-7. ~~:~~ Lead ECA Evaluation**

| | | | |
|---|---|---|---|
| **Minimum Observed Effluent Hardness** | | | **89 mg/L (as $CaCO_3$)** |
| **Maximum Observed Upstream Receiving Water Hardness** | | | **345 mg/L (as $CaCO_3$)** |
| **Maximum Assumed Upstream Receiving Water Lead Concentration** | | | **15.4 µg/L[1]** |
| **Lead $ECA_{chronic}$[2]** | | | **0.9 µg/L** |
| **Effluent Fraction** | **Mixed Downstream Ambient Concentration** | | |
| | **Hardness[3] (mg/L) (as $CaCO_3$)** | **CTR Criteria[4] (µg/L)** | **Lead[5] (µg/L)** |
| 1% | 342.4 | 15.2 | 15.2 |
| 5% | 332.2 | 14.7 | 14.7 |
| 15% | 306.6 | 13.2 | 13.2 |
| 25% | 281.0 | 11.9 | 11.8 |
| 50% | 217.0 | 8.5 | 8.1 |
| 75% | 153.0 | 5.5 | 4.5 |
| 100% | 89.0 | 2.7 | 0.9 |

1 Maximum assumed upstream receiving water lead concentration calculated using Equation 1 for chronic criterion at a hardness of **345 mg/L (as $CaCO_3$)**.

2 ECA calculated using Equation 3 for chronic criteria.

3 Mixed downstream ambient hardness is the mixture of the receiving water and effluent hardness at the applicable effluent fraction.

4 Mixed downstream ambient criteria are the chronic criteria calculated using Equation 1 at the mixed hardness.

5 Mixed downstream ambient lead concentration is the mixture of the receiving water and effluent lead concentrations at the applicable effluent fraction.

## Table F-8. ÷ Lead ECA Evaluation

| | | | |
|---|---|---|---|
| **Minimum Observed Effluent Hardness** | | | **89 mg/L (as $CaCO_3$)** |
| **Maximum Observed Upstream Receiving Water Hardness** | | | **345 mg/L (as $CaCO_3$)** |
| **Maximum Assumed Upstream Receiving Water Lead Concentration** | | | **1.52 µg/L[1]** |
| **Lead $ECA_{chronic}$[2]** | | | **2.7 µg/L** |
| **Effluent Fraction** | **Mixed Downstream Ambient Concentration** | | |
| | **Hardness[3] (mg/L) (as $CaCO_3$)** | **CTR Criteria[4] (µg/L)** | **Lead[5] (µg/L)** |
| 1% | 342.4 | 15.2 | 1.5 |
| 5% | 332.2 | 14.7 | 1.6 |
| 15% | 306.6 | 13.2 | 1.7 |
| 25% | 281.0 | 11.9 | 1.8 |
| 50% | 217.0 | 8.5 | 2.1 |
| 75% | 153.0 | 5.5 | 2.4 |
| 100% | 89.0 | 2.7 | 2.7 |

1 Maximum assumed upstream receiving water lead concentration based on maximum observed upstream receiving water lead concentration.

[2] ECA determined iteratively until all mixtures of effluent and receiving water are in compliance with the CTR criteria.

[3] Mixed downstream ambient hardness is the mixture of the receiving water and effluent hardness at the applicable effluent fraction.

[4] Mixed downstream ambient criteria are the chronic criteria calculated using Equation 1 at the mixed hardness.

[5] Mixed downstream ambient lead concentration is the mixture of the receiving water and effluent lead concentrations at the applicable effluent fraction.

c. **Assimilative Capacity and Mixing Zone.** Federal regulations require effluent limitations for all pollutants that are or may be discharged at a level that will cause or have the reasonable potential to cause, or contribute to an in-stream excursion above a narrative or numerical water quality standard. In determining whether a discharge has the reasonable potential to contribute to an in-stream excursion, the dilution of the effluent in the receiving water may be considered where areas of dilution are defined. The available dilution may also be used to calculate protective effluent limitations by applying water quality criteria at the edge of the defined mixing zone. These calculations include receiving water pollutant concentrations that are typically based on worst-case conditions for flow and concentration.

i. **Harding Drain.** For extended periods each year there are occasions of no flow in Harding Drain other than the effluent. The effluent dominated nature of Harding Drain means that the existing beneficial uses must be protected, but that no credit for receiving water dilution is available. Although the discharge, at times, maintains the aquatic habitat, constituents may not be discharged that may cause harm to aquatic life. At times, natural flows within Harding Drain help support an aquatic habitat, and significant dilution may occur during and immediately following high rainfall events. Both high and low flow conditions may exist within a short time span, where Harding Drain would be dry without the discharge and periods when sufficient background flows provide hydraulic continuity with the San Joaquin River.

Since the worst-case condition has no dilution at the point of discharge into Harding Drain, dilution and assimilative capacity within Harding Drain were not considered in establishing effluent limitations for pollutants in the effluent. For pollutants that demonstrated reasonable potential, effluent limitations were applied at the point of discharge to Harding Drain. The lack of dilution results in more stringent effluent limitations to protect the beneficial uses.

ii. **San Joaquin River.** The Discharger has requested dilution credits be used for calculation of WQBELs for carbon tetrachloride, chlorodibromomethane, dichlorobromomethane, and nitrate for discharges to the San Joaquin River. Section 1.4.2.2 of the SIP, provides that mixing zones should not be allowed at or near drinking water intakes. Furthermore, regarding the application of a mixing zone for protection of human health, the TSD states that," …*the presence of mixing zones should not result in significant health risks, when evaluated using reasonable assumptions about exposure pathways. Thus,*

*where drinking water contaminants are a concern, mixing zones should not encroach on drinking water intakes*." There are no known drinking water intakes in the vicinity of the discharge.

For constituents where water quality criteria are based on human health objectives, critical environmental impacts are expected to occur far downstream from the source such that complete mixing is a valid assumption. With regard to completely mixed discharges the SIP states, "*For completely-mixed discharges…the amount of receiving water available to dilute the effluent shall be determined by calculating the dilution ratio (i.e. the critical receiving water flow divided by the effluent flow)…*" Therefore, for purposes of establishing WQBELs for carbon tetrachloride, chlorodibromomethane, and dichlorobromomethane in this Order for discharges to the San Joaquin River, dilution credits may be granted based on the critical flows of the receiving water and effluent discharge.

For nitrate, the Primary Maximum Contaminant Level (MCL) is designed to be protective over shorter periods of time (e.g., 30 days or less), and therefore a human health dilution credit based on the harmonic mean flow is not appropriate.

The Discharger provided a dilution/mixing zone study prepared by Larry Walker Associates on 16 June 2009 (Technical Memorandum entitled "City of Turlock Water Quality Control Facility – San Joaquin River Discharge Mixing Zone Study and Requested Amendment to Tentative Order, NPDES No. CA0078948"). Using the Cornell Mixing Zone Expert System (CORMIX) model, the point of complete mixing downstream of the Discharger's proposed discharge to the San Joaquin River was estimated. A summary of the primary data inputs to the CORMIX model are provided below:

- A value of 100 feet (30.5 meters) was estimated for river width; the cross section geometry was estimated using aerial photo width measurements.
- River depths were estimated under a number of selected design/critical flows using Manning's equation.
- The effluent concentration was arbitrarily specified equal to 100 mg/L. In CORMIX, this value (or any other reference value) can be used in the absence of actual effluent concentration data. This means that some of the CORMIX-calculated concentrations along the longitudinal dimension of the plume (i.e., along the stream reach) are lower than the arbitrarily selected effluent concentration and are simply used to calculate the CORMIX dilution ratio.
- The proposed outfall cross-section was estimated to be 2 meters wide by 0.2 meters deep, which corresponds to the maximum permitted flow rate.

Two primary model scenarios were run; 1) one corresponding to a harmonic mean flow of the San Joaquin River (617 cubic feet per second) for use in evaluating potential dilution for carbon tetrachloride, chlorodibromomethane, and dichlorobromomethane (consistent with the SIP and USEPA *Technical Support Document for Water Quality-based Toxic Control* or TSD), and 2) one corresponding to 30Q10 critical low flow of the San Joaquin River (180 cubic feet per second) for use in evaluating potential dilution for nitrate (use of the 30Q10 is consistent with the USEPA TSD recommendations for noncarcinogens).[1] For each model scenario, two evaluations were performed: 1) estimates of the distance downstream to achieve complete mix; and 2) estimates of the dilution available at the downstream monitoring location, 400 meters from the proposed discharge point into the San Joaquin River.

According to the report, initial mixing at the proposed point of discharge is momentum and buoyancy based; complete mixing is then achieved more slowly through dispersion as the narrow plume hugs the eastern bank of the San Joaquin River. For carbon tetrachloride, chlorodibromomethane, and dichlorobromomethane the results of the study indicates that the edge of the mixing zone where complete mixing occurs in the San Joaquin River is 3,048 meters (just under 2 miles) downstream of the proposed discharge point to the San Joaquin River. The width and depth of the mixing zone is approximately 30.48 meters and 0.93 meters, respectively. For nitrate, the results of the study indicates that the edge of the mixing zone where complete mixing occurs is 3,007 meters (almost 1.9 miles) downstream of the proposed discharge point to the San Joaquin River. The width and depth of the mixing zone is approximately 30.48 meters and 0.57 meters, respectively.

Based on its review of the Discharger's response, the Regional Water Board concludes that adequate justification exists and dilution should be allowed for carbon tetrachloride, chlorodibromomethane, dichlorobromomethane, and nitrate. For human health criteria the SIP recommends using the harmonic mean receiving water flow and the long-term arithmetic mean to calculate a dilution credit (SIP at Section 1.4.2.1). In an effort to limit the size of the mixing zone, the Discharger has requested that the dilution be based on the design flow of the Facility (20 MGD). Based on the harmonic mean flow of 617 cubic feet per second (cfs) or 398 MGD of the San Joaquin River calculated using USEPA's DFLOW software for the period of 1981 through 2008, and the design discharge flow of 20 MGD, a dilution ~~ratio~~ credit of ~~up to 20:1~~19.9 may be allowed for the calculation of WQBELs for carbon tetrachloride, chlorodibromomethane, and dichlorobromomethane. Based on the above, the Regional Water Board will apply a dilution factor of 19.9 for carbon tetrachloride, chlorodibromomethane, and dichlorobromomethane.

[1] The USEPA TSD states that because the effects of noncarcinogens are more often associated with shortened exposures, EPA suggests the use of the 30Q5 critical low flow. The 30Q10 proposed by the Discharger would generally result in a more conservative (i.e., lower) critical flow.

For nitrate, the dilution credit is calculated using the 30Q10 (180 cfs or 116 MGD) and the design discharge flow of 20 MGD. Therefore, a dilution ratio of up to 5.8:1 may be allowed for the calculation of WQBELs for nitrate. The Discharger, in its mixing zone study, has requested that the dilution factor be limited to ~~1.8~~2.4, which reflects a mixing zone at which a performance-based effluent limitation can be achieved. The edge of the mixing zone representing the dilution factor of ~~1.8~~2.4 is ~~11.7~~29.7 meters (just under ~~40~~ 100 feet) downstream of the ~~confluence of Harding Drain and~~ outfall to the San Joaquin River. The width and depth of the mixing zone is approximately ~~2.79~~7.3 meters and 0.57 meters, respectively. The Regional Water Board concurs with use of the smaller mixing zone for nitrate that represents the performance of the existing Facility. The observed average effluent concentration for the Facility is ~~15.5~~16 mg/L nitrate (as N), with a standard deviation of ~~3.24~~3.8 mg/L nitrate (as N). ~~The~~ A statistically derived performance-based effluent limitation of~~, 26~~ 29 mg/L nitrate (as N)~~,~~ was calculated based on the effluent average (16~~15.5~~ mg/L) plus 3.3 times the standard deviation (3.3 x 3.~~24~~ 8 mg/L = 13~~10.7~~ mg/L). However, because the maximum observed effluent nitrate concentration of 31 mg/L exceeds the statistically derived effluent limitation, this Order includes a performance-based effluent limitation for nitrate equivalent to the maximum observed effluent concentration.

iii. **Consistency with Mixing Zone Requirements.** This Order only allows a mixing zone for human health criteria. This Order does not allow mixing zones for compliance with aquatic toxicity criteria. The mixing zone is as small as practicable, will not compromise the integrity of the entire water body, restrict the passage of aquatic life, dominate the waterbody or overlap existing mixing zones from different outfalls.

According to Section 1.4.2.2 of the SIP (Mixing Zone Conditions), a mixing zone shall not cause the following conditions:

(1) Compromise the integrity of the entire water body – The proposed human health mixing zone is approximately 2 miles long, constituting a small fraction of the total river reach.

(2) Cause acutely toxic conditions to aquatic life passing through the mixing zone – The mixing zone request was for select human health criteria and objectives. This Order does not allow an acute aquatic life mixing zone and requires compliance with an acute toxicity effluent limitation that requires acute bioassays using 100% effluent (i.e., no dilution). Compliance with the acute toxicity effluent limitation assures the effluent is not acutely toxic.

(3) Restrict the passage of aquatic life – As described above, the narrow plume hugs the eastern bank of the San Joaquin River. Therefore granting the mixing zone should not restrict the passage of aquatic life.

(4) Adversely impact biologically sensitive or critical habitats, including, but not limited to, habitat of species listed under federal or State endangered species laws – This Order does not allow mixing zones for compliance with aquatic toxicity criteria. The Discharger must meet stringent end-of-pipe effluent limitations for constituents that demonstrated reasonable potential to exceed aquatic toxicity criteria (i.e., aluminum, ammonia, copper, chloride, selenium, and total residual chlorine).

(5) Produce undesirable or nuisance aquatic life – The mixing zone request was for select human health criteria and objectives. This Order requires end-of-pipe effluent limitations (e.g. for biochemical oxygen demand and total suspended solids) and discharge prohibitions to prevent these conditions from occurring.

(6) Result in floating debris, oil, or scum – The mixing zone request was for select human health criteria and objectives. This Order requires end-of-pipe effluent limitations (e.g., for $BOD_5$ and TSS) and discharge prohibitions to prevent these conditions from occurring.

(7) Produce objectionable color, odor, taste, or turbidity – The mixing zone request was for select human health criteria and objectives. This Order requires end-of-pipe effluent limitations (e.g., for $BOD_5$ and TSS) and discharge prohibitions to prevent these conditions from occurring.

(8) Cause objectionable bottom deposits – The mixing zone request was for select human health criteria and objectives. The granting of the mixing zone should not affect operations at the Facility, and should not produce objectionable bottom deposits.

(9) Cause nuisance – The mixing zone request was for select human health criteria and objectives, none of which should cause a nuisance within or outside the mixing zone.

(10) Dominate the receiving water body or overlap a mixing zone from different outfalls – The City of Modesto discharge is located approximately 5.5 miles downstream from the proposed outfall to the San Joaquin River. The edge of the mixing zone is approximately 3.5 miles upstream from the City of Modesto discharge locations; therefore an overlap of mixing zones does not occur.

(11) Be allowed at or near any drinking water intake – The discharge enters the San Joaquin River just over 28 miles upstream of the nearest drinking water supply (in the Delta downstream of Vernalis). The human

health criteria mixing zone extends just over 3,000 meters downstream of the discharge. There is significant dilution, much more than that is allowed in this Order, prior to any drinking water intake within the Delta. There are no known drinking water intakes within the mixing zone.

As suggested by the SIP, in determining the extent of or whether to allow a mixing zone and dilution credit, the Regional Water Board has considered the presence of pollutants in the discharge that are carcinogenic, mutagenic, teratogenic, persistent, bioaccumulative, or attractive to aquatic organisms, and concluded that the allowance of the mixing zone and dilution credit is adequately protective of the beneficial uses of the receiving water. Although carbon tetrachloride, chlorodibromomethane, and dichlorobromomethane, are carcinogens, exposure (short- and long-term) to humans within the proposed mixing zone will be limited.

The mixing zone therefore complies with the SIP. The mixing zone also complies with the Basin Plan, which requires that the mixing zone not adversely impact beneficial uses. Beneficial uses will not be adversely affected for the same reasons discussed above. In determining the size of the mixing zone, the Regional Water Board has considered the procedures and guidelines in the EPA's Water Quality Standards Handbook, 2d Edition (updated July 2007), Section 5.1, and Section 2.2.2 of the Technical Support Document for Water Quality-based Toxics Control (TSD). The SIP incorporates the same guidelines.

d. **Metal Translators.** The Discharger submitted monitoring data to support metal translators for the discharge to the San Joaquin River on 11 June 2008. A formal report was requested by the Regional Water Board on 16 June 2008. The Discharger submitted the report on 16 July 2008 and requested acute and chronic translators be used to calculate aquatic life criteria for copper, lead, and zinc. Upon review of the Metals Translator Report, the Regional Water Board identified several deficiencies, including the manner in which the translator study was conducted, the interpretation of the data, and the conclusions reached. The Regional Water Board issued their findings to the Discharger on 31 October 2008, to which the Discharger submitted a response on 21 November 2008. The Discharger's response addressed the major concerns regarding the Metals Translator Report.

Based on the findings of the Metals Translator Report, the Discharger has requested that water quality criteria for copper, lead, and zinc be calculated using site-specific translators. For the discharge to Harding Drain at Discharge Point No. 001, the Discharger has requested that water quality criteria be calculated using the following site-specific translators derived using effluent monitoring data for the period of September 2006 through April 2007:

**Table F-95. Metals Translators Based on Effluent Samples**

| Parameter | Translator (1/fD) | |
|---|---|---|
| | Acute | Chronic |
| Copper, Total Recoverable | 1.22 | 1.52 |
| Lead, Total Recoverable | 1.08 | 1.32 |
| Zinc, Total Recoverable | 1.00 | 1.04 |

Because these translators are based on effluent samples only, and are representative and protective of the receiving water under critical low flow conditions (i.e., during periods of no dilution), the Regional Water Board finds that it is appropriate to apply the proposed translators based on effluent samples to adjust water quality criteria for copper, lead, and zinc for the discharge to Harding Drain from Discharge Point No. 001.

For the discharge to the San Joaquin River at Discharge Point No. 002, the Discharger has requested that water quality criteria be calculated using the following site-specific translators derived using a synthetic sample simulating critical low flow conditions in the San Joaquin River (4:1 based on the 7Q10 taken from other studies in the vicinity of the discharge).

**Table F-106. Metals Translators Based on Synthetic Samples**

| Parameter | Translator (1/fD) | |
|---|---|---|
| | Acute | Chronic |
| Copper, Total Recoverable | 1.45 | 1.82 |
| Lead, Total Recoverable | 6.67 | 11.34 |
| Zinc, Total Recoverable | 1.19 | 1.39 |

USEPA's translator guidance states that "*depending on state guidance or regulatory negotiations, samples may be collected from the effluent, the receiving water before mixing with the effluent, the receiving water edge of the mixing zone, and/or the receiving water in the far field (beyond the mixing zone)*." Although the USEPA guidance allows for alternative sampling locations, the allowance of chronic translators based on the 4:1 synthetic samples is not consistent with section 1.4.2 of the SIP. Section 1.4.2 of the SIP requires a mixing zone study in order to grant mixing zones and dilution credits. However, translators based on the 4:1 synthetic samples assume dilution is available even though an appropriate mixing zone analysis has not been conducted for metals and aquatic life protection. Therefore, until an applicable mixing zone analysis has been conducted, it is not appropriate to grant the translators based on the 4:1 synthetic sample. In lieu of calculating water quality criteria using the translators based on the 4:1 synthetic samples, Regional Water Board staff concludes that it is appropriate to apply the proposed translators based on effluent samples to adjust water quality criteria for copper, lead, and zinc for the discharge to the San Joaquin River from Discharge Point No. 002.

### 3. Determining the Need for WQBELs

a. CWA section 301 (b)(1) requires NPDES permits to include effluent limitations that achieve technology-based standards and any more stringent limitations

necessary to meet water quality standards. Water quality standards include Regional Water Board Basin Plan beneficial uses and narrative and numeric water quality objectives, State Water Board-adopted standards, and federal standards, including the CTR and NTR. The Basin Plan includes numeric site-specific water quality objectives and narrative objectives for toxicity, chemical constituents, and tastes and odors. The narrative toxicity objective states: "*All waters shall be maintained free of toxic substances in concentrations that produce detrimental physiological responses in human, plant, animal, or aquatic life.*" (Basin Plan at III-8.00.) With regards to the narrative chemical constituents objective, the Basin Plan states that waters shall not contain chemical constituents in concentrations that adversely affect beneficial uses. At a minimum, "…*water designated for use as domestic or municipal supply (MUN) shall not contain concentrations of chemical constituents in excess of the maximum contaminant levels (MCLs)*" in Title 22 of CCR. The narrative tastes and odors objective states: "*Water shall not contain taste- or odor-producing substances in concentrations that impart undesirable tastes or odors to domestic or municipal water supplies or to fish flesh or other edible products of aquatic origin, or that cause nuisance, or otherwise adversely affect beneficial uses.*"

b. Federal regulations require effluent limitations for all pollutants that are or may be discharged at a level that will cause or have the reasonable potential to cause, or contribute to an in-stream excursion above a narrative or numerical water quality standard. Based on information submitted as part of the application, in studies, and as directed by monitoring and reporting programs, the Regional Water Board finds that the discharge has a reasonable potential to cause or contribute to an in-stream excursion above a water quality standard from Discharge Point No. 001 to Harding Drain for aluminum, ammonia, carbon tetrachloride, chlorine residual, chlorodibromomethane, copper, dichlorobromomethane, electrical conductivity, nitrate, pH, selenium, and pathogens. The Regional Water Board finds that the discharge has a reasonable potential to cause or contribute to an in-stream excursion above a water quality standard from Discharge Point No. 002 to the San Joaquin River for aluminum, ammonia, boron, carbon tetrachloride, chloride, chlorine residual, chlorodibromomethane, copper, dichlorobromomethane, electrical conductivity, iron, lead, manganese, nitrate, pH, selenium, silver, and pathogens. WQBELs for these constituents are included in this Order. A summary of the reasonable potential analysis (RPA) is provided in Attachment G, and a detailed discussion of the RPA for each constituent is provided below.

c. The Regional Water Board conducted the RPA in accordance with Section 1.3 of the SIP. Although the SIP applies directly to the control of CTR priority pollutants, the State Water Board has held that the Regional Water Board may use the SIP as guidance for water quality-based toxics control.[1] The SIP states in the introduction "*The goal of this Policy is to establish a standardized approach for permitting discharges of toxic pollutants to non-ocean surface waters in a*

[1] See, Order WQO 2001-16 (Napa) and Order WQO 2004-0013 (Yuba City).

*manner that promotes statewide consistency."* Therefore, in this Order the RPA procedures from the SIP were used to evaluate reasonable potential for both CTR and non-CTR constituents.

d. WQBELs were calculated in accordance with section 1.4 of the SIP, as described in Attachment F, Section IV.C.4.

e. The Discharger completed final upgrades to the Facility to provide tertiary treatment in the spring of 2006. However, effluent monitoring during the start-up period may not be representative of current effluent quality, as mixtures of coagulants and operation of the DensaDeg® filter were still under refinement. Additionally, the Discharger reported in the cover letter to the SMR for September 2006 that a new methane phase digester began operation on 6 August 2006; a new acid-phase digester came on-line on 12 September 2006; and an additional primary flotator began operation on 26 September 2006. Therefore, effluent monitoring data used to conduct the RPA included SMRs, priority pollutant monitoring, and the Discharger's Metals Translator Report from the period of October 2006 through April 2008. Receiving water monitoring data used to conduct the RPAs included SMRs and priority pollutant monitoring from the period of May 2005 through April 2008, and the Metals Translator Report from the period of May 2006 through April 2007.

f. **Aluminum.** USEPA developed National Recommended Ambient Water Quality Criteria for protection of freshwater aquatic life for aluminum. The recommended 4-day average (chronic) and 1-hour average (acute) criteria for aluminum are 87 µg/L and 750 µg/L, respectively. The Secondary Maximum Contaminant Level - Consumer Acceptance Limit for aluminum is 200 µg/L.

   The MEC for acid-soluble aluminum was 56.3 µg/L, based on 12 samples collected between October 2006 and April 2008. Upstream receiving water acid-soluble aluminum data for Harding Drain is not available. The maximum observed upstream receiving water acid-soluble aluminum concentration in the San Joaquin River was 457 µg/L, based on 20 samples collected between May 2005 and April 2008.

   The MEC for total aluminum was 640 µg/L, based on 31 samples collected between October 2006 and April 2008 and reported in the Discharger's SMRs and Metals Translator Report. The maximum observed upstream receiving water total aluminum concentration in Harding Drain was 500 µg/L, based on six samples collected between May 2005 and April 2008. The maximum observed upstream receiving water total aluminum concentration in the San Joaquin River was 4,440 µg/L, based on 26 samples collected between May 2005 and April 2008. Therefore, the discharge of total aluminum to Harding Drain has the reasonable potential to cause an excursion above the secondary MCL. The discharge of total aluminum to the San Joaquin River has the reasonable potential to cause an excursion above the acute aquatic life criterion.

Footnote L to the National Recommended Ambient Water Quality Criteria summary table for aluminum indicates that the chronic aquatic life criterion is based on studies conducted under specific receiving water conditions with a low pH (6.5 to 6.8 pH units) and low hardness (<10 mg/L as $CaCO_3$). Monitoring data demonstrates that these conditions are not similar to those in Harding Drain, which has a pH ranging from 6.7 to 8.9. Although no hardness data for Harding Drain is available, the critical condition in Harding Drain occurs when there is no flow upstream of the discharge point. During this critical condition, the effluent from the Facility constitutes the flow in Harding Drain. The lowest reported effluent hardness was 89 mg/L. Thus, it is likely that application of the chronic criterion of 87 µg/L is not necessary to protect aquatic life in Harding Drain. Although this Order authorizes emergency discharges to Harding Drain in the event of a power failure at the pump station subsequent to the commencement of discharges to Discharge Point No. 002, these discharges will be infrequent and short in duration (i.e., several minutes) such that a chronic criterion is unnecessary for the protection of aquatic life.

Monitoring data demonstrates that the conditions under which the chronic aquatic life was developed are also not similar to those in the San Joaquin River, which has a pH ranging from 7.1 to 8.5 and hardness concentrations ranging from 98 mg/L to 318 mg/L as $CaCO_3$. Because the hardness values in the San Joaquin River are higher (which decreases the toxic effects to aquatic life) than the water hardness values in which the criterion was developed, USEPA advises that a water effects ratio might be appropriate to better reflect the actual toxicity of aluminum to aquatic organisms.

In April 2005, the City of Modesto completed a Phase I Water-Effects Ratio Study (WER) for aluminum near its discharge point which is downstream of the Discharger's proposed outfall in the San Joaquin River, and on 11 November 2005, submitted the results in its Aluminum Water-Effect Ratio Study Plan. The Phase 1 WER study consisted of range-finding toxicity tests, in which the species *Daphnia magna*, *Ceriodaphnia dubia*, and Rainbow Trout were evaluated. In addition, on 12 April 2007, the City of Manteca completed a Phase II aluminum WER study for the San Joaquin River near its discharge point, which is downstream of the City of Modesto. The Modesto Phase I WER study was not adequate to calculate a WER, but results suggested that a WER greater than 1.0 may be appropriate. The Manteca Phase II WER study, which may be used to calculate a WER for the City of Manteca's discharge, indicated that a WER of 22.7 can be applied to the chronic criterion for aluminum. Since the characteristics of the San Joaquin River (e.g. hardness and pH) near Modesto and Manteca are similar to those near the Discharger's proposed outfall in the San Joaquin River, the results of the City of Modesto's WER study and the City of Manteca's WER study put into question the applicability of the stringent CCC recommended by the National Ambient Water Quality Criteria for aluminum. Based on the above information, using the chronic criterion recommended in the National Ambient Water Quality Criteria (87 µg/L) is not appropriate for the San Joaquin River in the vicinity of the Discharger's proposed outfall.

In the absence of an applicable chronic aquatic life criterion, the most stringent water quality criterion is the Secondary MCL - Consumer Acceptance Limit for aluminum of 200 µg/L. Both the discharges to Harding Drain and the San Joaquin River have a reasonable potential to cause or contribute to an in-stream excursion above the Secondary MCL for aluminum. Based on input from the Department of Public Health (DPH) and the fact that secondary MCLs are designed to protect consumer acceptance, effluent limitations based on secondary MCLs are applied as an annual average concentration. An annual average effluent limitation of 200 µg/L for aluminum is included in this Order based on protection of the Basin Plan's numeric chemical constituents objective.

The discharge to the San Joaquin River also demonstrates reasonable potential to exceed the acute aquatic life criterion for aluminum, and it is uncertain whether regulating the discharge based on the secondary MCL (200 µg/L as an annual average) would also be protective of the acute aquatic life criterion. Therefore, this Order also includes an average monthly effluent limitation (AMEL) and a maximum daily effluent limitation (MDEL) of 261 µg/L and 750 µg/L, respectively, based on USEPA's National Ambient Water Quality Criteria for the protection of freshwater aquatic life for discharges to the San Joaquin River (see Attachment F, Table F-14~~0~~ for WQBEL calculations).

In USEPA's Ambient Water Quality Criteria for Aluminum—1988 [EPA 440/5-86-008], USEPA states that "[a]*cid-soluble aluminum…is probably the best measurement at the present…*"; however, USEPA has not yet approved an acid-soluble test method for aluminum. Replacing the ICP/AES portion of the analytical procedure with ICP/MS would allow lower detection limits to be achieved. Based on USEPA's discussion of aluminum analytical methods, this Order allows the use of the alternate aluminum testing protocol described above to meet monitoring requirements.

Based on the sample results for the effluent, the limitations appear to put the Discharger in immediate non-compliance for the discharge to Harding Drain and the San Joaquin River. New or modified control measures may be necessary in order to comply with the effluent limitations, and the new or modified control measures cannot be designed, installed and put into operation within 30 calendar days. Furthermore, the effluent limitations for aluminum are a new regulatory requirement within this permit, which becomes applicable to the waste discharge with the adoption of this Order, which was adopted after 1 July 2000. Therefore, a compliance time schedule for compliance with the aluminum effluent limitations is established in TSO No. R5-2009-XXXX in accordance with CWC section 13300, that requires preparation and implementation of a pollution prevention plan in compliance with CWC section 13263.3.

g. **Ammonia.** Untreated domestic wastewater contains ammonia. Nitrification is a biological process that converts ammonia to nitrite and nitrite to nitrate. Denitrification is a process that converts nitrate to nitrite or nitric oxide and then

to nitrous oxide or nitrogen gas, which is then released to the atmosphere. The Discharger currently uses nitrification to remove ammonia from the waste stream. Inadequate or incomplete nitrification may result in the discharge of ammonia to the receiving stream. Ammonia is known to cause toxicity to aquatic organisms in surface waters. Discharges of ammonia would violate the Basin Plan narrative toxicity objective. Applying 40 CFR 122.44(d)(1)(vi)(B), it is appropriate to use the NAWQC for the protection of freshwater aquatic life for ammonia.

The NAWQC for the protection of freshwater aquatic life for total ammonia, recommends acute (1-hour average; criteria maximum concentration or CMC) standards based on pH and chronic (30-day average; criteria continuous concentration or CCC) standards based on pH and temperature. USEPA also recommends that no 4-day average concentration should exceed 2.5 times the 30-day CCC. USEPA found that as pH increased, both the acute and chronic toxicity of ammonia increased. Salmonids were more sensitive to acute toxicity effects than other species. However, while the acute toxicity of ammonia was not influenced by temperature, it was found that invertebrates and young fish experienced increasing chronic toxicity effects with increasing temperature. As discussed in section III.C.1 of this Fact Sheet, warm and cold SPWN beneficial uses have been applied to Harding Drain. Additionally, warm SPWN is an existing use of the San Joaquin River. Early life stages of fish are likely present in the San Joaquin River from the mouth of the Merced River to Vernalis, and anadromous King (Chinook) salmon occasionally run in reaches of the San Joaquin River during wet years. Therefore, the recommended criteria for waters where salmonids and early life stages are present were used.

The maximum permitted effluent pH is 8.5, as the Basin Plan objective for pH in the receiving stream is the range of 6.5 to 8.5. In order to protect against the worst-case short-term exposure of an organism, a pH value of 8.5 was used to derive the acute criterion. The resulting acute criterion is 2.14 mg/L.

Downstream receiving water temperature and pH data from the Discharger's monthly monitoring reports from October 2006 through April 2008 were used to develop the chronic criteria. Using downstream receiving water data, the 30-day CCC was calculated for each day when temperature and pH were measured. The resulting lowest 99.9% 30-day CCC is 2.67 mg/L (as N) for the discharge to Harding Drain. The resulting lowest 99.9% 30-day CCC is 3.68 mg/L (as N) for the discharge to the San Joaquin River. The 4-day average concentration is derived in accordance with the USEPA criterion as 2.5 times the 30-day CCC. Based on the 30-day CCC of 2.67 mg/L (as N), the 4-day average concentration that should not be exceeded is 6.68 mg/L (as N) for the discharge to Harding Drain. Based on the 30-day CCC of 3.68 mg/L (as N), the 4-day average concentration that should not be exceeded is 9.20 mg/L (as N) for the discharge to the San Joaquin River.

The Regional Water Board calculates WQBELs in accordance with SIP procedures for non-CTR constituents, and ammonia is a non-CTR constituent.

The SIP procedure assumes a 4-day averaging period for calculating the long-term average discharge condition (LTA). However, USEPA recommends modifying the procedure for calculating permit limits for ammonia using a 30-day averaging period for the calculation of the LTA corresponding to the 30-day CCC. Therefore, while the LTAs corresponding to the acute and 4-day chronic criteria were calculated according to SIP procedures, the LTA corresponding to the 30-day CCC was calculated assuming a 30-day averaging period. The lowest LTA representing the acute, 4-day average, and 30-day CCC is then selected for deriving the average monthly effluent limitation (AMEL) and the maximum daily effluent limitation (MDEL). The remainder of the WQBEL calculation for ammonia was performed according to the SIP procedures.

This Order contains a final AMEL and MDEL for ammonia of 1.1 mg/L and 2.1 mg/L, respectively, based on the NAWQC for the protection of freshwater aquatic life for discharges to Harding Drain and the San Joaquin River (see Attachment F, Tables F-15~~1~~ and F-16~~2~~ for WQBEL calculations). Based on monitoring data submitted from October 2006 through April 2008, it appears the Discharger can immediately comply with these limitations.

h. **Bis (2-Ethylhexyl) Phthalate.** Bis (2-ethylhexyl) phthalate, in addition to several other phthalates, is used primarily as one of several plasticizers in polyvinyl chloride (PVC) resins for fabricating flexible vinyl products. According to the Consumer Product Safety Commission, USEPA, and the Food and Drug Administration, these PVC resins are used to manufacture many products, including soft squeeze toys, balls, raincoats, adhesives, polymeric coatings, components of paper and paperboard, defoaming agents, animal glue, surface lubricants, and other products that must stay flexible and non-injurious for the lifetime of their use. The State MCL for bis (2-ethylhexyl) phthalate is 4 µg/L and the USEPA MCL is 6 µg/L. The NTR criterion for human health protection for consumption of water and aquatic organisms is 1.8 µg/L and for consumption of aquatic organisms only is 5.9 µg/L.

Bis (2-ethylhexyl) phthalate was detected in the effluent five times with an MEC of 17.5 µg/L, based on seven samples collected between October 2006 and April 2008. However, based on the review of the lab data sheets for the samples, each of the detected samples was suspected to be the result of contamination, having the data qualifiers “B”, “GG”, and/or “O-01”. The maximum observed bis (2-ethylhexyl) phthalate concentration in Harding Drain was 19 µg/L, based on six samples collected between May 2005 and April 2008. The maximum observed bis (2-ethylhexyl) phthalate concentration in the San Joaquin River was 12.3 µg/L, based on six samples collected between May 2005 and April 2008.

As described above, bis (2-ethylhexyl) phthalate is a commonly used plasticizer and is to some extent ubiquitous in the environment. Since bis (2-ethylhexyl) phthalate is a common contaminant of sample containers, sampling apparatus, and analytical equipment, and sources of the detected bis (2-ethylhexyl)

phthalate may be from plastics used for sampling or analytical equipment, it is uncertain whether reasonable potential actually exists and therefore effluent limitations for bis (2-ethylhexyl) phthalate are not being established at this time. Instead of limitations, additional monitoring has been established for bis (2-ethylhexyl) phthalate; should monitoring results indicate that the discharge has the reasonable potential to cause or contribute to an exceedance of a water quality standard, then this Order may be reopened and modified by adding an appropriate effluent limitation.

i. **Boron.** Table III-1 of the Basin Plan contains water quality objectives for boron in the San Joaquin River from the mouth of the Merced River to Vernalis as follows:

**Table F-11~~7~~. Site-Specific Water Quality Objectives for Boron**

| Constituent | Maximum Concentration (mg/L)[1] | Applicable Water Bodies |
|---|---|---|
| Boron | 2.0 (15 March through 15 September)<br>0.8 (monthly mean, 15 March through 15 September) | San Joaquin River, mouth of the Merced River to Vernalis |
| | 2.6 (16 September through 14 March)<br>1.0 (monthly mean, 16 September through 14 March) | |
| | 1.3 (monthly mean, critical year[2]) | |

[1] Boron objectives are total concentrations.
[2] See Table IV-3 of the Basin Plan.

Boron concentrations in the effluent ranged from 195 µg/L to 325 µg/L for 22 samples collected by the Discharger from October 2006 through April 2008. The maximum upstream receiving water concentration in the San Joaquin River was 877 µg/L, based on six samples collected between May 2005 and April 2008. Because the receiving water exceeds the site-specific Basin Plan objective for boron (0.8 mg/L as a monthly mean applicable from 15 March through 15 September) and boron was detected in the effluent, the discharge to the San Joaquin River has reasonable potential to cause or contribute to an exceedance of the water quality objective for boron.

The San Joaquin River in the vicinity of the discharge is included on the 303(d) list as an impaired water body due to elevated boron levels. The Regional Water Board completed a TMDL for salt and boron in the lower San Joaquin River and amended the Basin Plan to include water quality objectives and waste load allocations. The Basin Plan Amendment for the Control of Salt and Boron Discharges into the Lower San Joaquin River was adopted by the Regional Water Board on 10 September 2004, by Resolution No. R5-2004-0108, and was approved by the State Water Board and by the Office of Administrative Law. The Basin Plan amendment is now state law, and went into effect on 28 July 2006. However, the compliance schedule was not originally approved by USEPA, because it was not specifically requested by the State Water Board. A request for approval of the compliance schedule was submitted later, which received USEPA approval on 12 March 2008. According to the control program

associated with the Basin Plan amendment, "*The salt and boron control program establishes salt load limits to achieve compliance at the Airport Way Bridge near Vernalis with salt and boron water quality objectives for the LSJR*.", and according to the TMDL report associated with the Basin Plan amendment, the two major NPDES permittees in this area (one of which is the Discharger) "*account for no more than two percent of the total salt load at Vernalis*."

The control program states that "*control actions that result in salt load reductions will be effective in the control of boron*." However, the TMDL primarily targets non-point discharges and it is uncertain whether salt reductions in municipal wastewater discharges effectively reduces boron. Therefore, although the TMDL for salt and boron does not contain waste load allocations for point source discharges of boron, this Order includes final effluent limitations for boron due to concerns regarding elevated concentrations of boron in the San Joaquin River. The site-specific Basin Plan objectives for boron are established directly as effluent limitations. Based on monitoring data submitted from October 2006 through April 2008, it appears the Discharger can immediately comply with these limitations.

j. **Carbon Tetrachloride.** Carbon tetrachloride is a clear heavy organic liquid with a sweet aromatic odor similar to chloroform. It is primarily used to make chlorofluorocarbon propellants and refrigerants, though its use has been declining steadily. It has also been used as dry cleaning agent and in fire extinguishers, in making nylon, as a solvent for rubber cement, soaps, insecticides, etc. The CTR criterion for human health protection for consumption of water and aquatic organisms for carbon tetrachloride is 0.25 µg/L.

The MEC for carbon tetrachloride was 1.9 µg/L, based on 10 samples collected between October 2006 and April 2008. Carbon tetrachloride was not detected in the upstream receiving water in either Harding Drain or the San Joaquin River, based on three samples collected between May 2005 and April 2008. Therefore, the discharge has a reasonable potential to cause or contribute to an in-stream excursion above the CTR criterion for carbon tetrachloride. No dilution is allowed for discharges to Harding Drain due to periods of no flow in Harding Drain.

This Order includes an AMEL and MDEL for carbon tetrachloride of 0.25 µg/L and 0.72 µg/L, respectively, based on the CTR criterion for the protection of human health for discharges to Harding Drain (see Attachment F, Table F-17~~3~~ for WQBEL calculations).

Based on the sample results for the effluent, the limitations appear to put the Discharger in immediate non-compliance for the discharge to Harding Drain. New or modified control measures may be necessary in order to comply with the effluent limitations, and the new or modified control measures cannot be designed, installed and put into operation within 30 calendar days. Furthermore, the effluent limitations for carbon tetrachloride are a new regulatory requirement within this permit, which becomes applicable to the waste discharge with the

adoption of this Order, which was adopted after 1 July 2000. Therefore, a compliance time schedule for compliance with the carbon tetrachloride effluent limitations is established in TSO No. R5-2009-XXXX in accordance with CWC section 13300, that requires preparation and implementation of a pollution prevention plan in compliance with CWC section 13263.3.

The Discharger performed an upstream ambient disinfection byproduct low-level concentration study to better quantify available assimilative capacity in the San Joaquin River. The Discharger collected upstream samples on 25 -February 2009 and 15 April 2009. The analytical laboratory performed a modified USEPA 524.2 method that uses a selected ion monitoring (SIM) procedure with gas chromatograph/mass spectrometry (GC/MS) analysis. The SIM method targets limited predetermined ion ranges allowing higher scanning rates for these ranges. The reporting limits using the SIM method are approximately three to five times lower than the method detection limit (MDL) for the standard method. Based on the use of the SIM procedure, all target chlorination byproducts concentrations were reported as "not detected" at a reporting limitation of 0.05 µg/L.

The ambient monitoring demonstrates the San Joaquin River has assimilative capacity for carbon tetrachloride. As described in section IV.C.2.c, a dilution credit for carbon tetrachloride of ~~up to 20:1~~19.9 can be granted, based on the available human health dilution. This Order includes an AMEL and MDEL for carbon tetrachloride of ~~4.1~~4.2 µg/L and 12 µg/L, respectively, based on the CTR criterion for the protection of human health for discharges to the San Joaquin River (see Attachment F, Table F-18~~4~~ for WQBEL calculations). Based on the sample results for the effluent, it appears the Discharger can meet these new limitations for the discharge to the San Joaquin River.

k. **Chlorine Residual.** The Discharger uses chlorine for disinfection, which is extremely toxic to aquatic organisms. The Discharger uses a sodium bisulfate process to dechlorinate the effluent prior to discharge to Harding Drain and the San Joaquin River. Due to the existing chlorine use and the potential for chlorine to be discharged, the discharge has a reasonable potential to cause or contribute to an in-stream excursion above the Basin Plan's narrative toxicity objective.

The USEPA *Technical Support Document for Water Quality-Based Toxics Control* [EPA/505/2-90-001] contains statistical methods for converting chronic (4-day) and acute (1-hour) aquatic life criteria to average monthly and maximum daily effluent limitations based on the variability of the existing data and the expected frequency of monitoring. However, because chlorine is an acutely toxic constituent that can and will be monitored continuously, an average 1-hour limitation is considered more appropriate than an average daily limitation. Average 1-hour and 4-day limitations for chlorine, based on these criteria, are included in this Order. Based on data reported during the term of Order No. 5-01-122, it appears as if the Discharger can immediately comply with these new effluent limitations for chlorine residual.

l. **Chlorodibromomethane.** The CTR includes a chlorodibromomethane criterion of 0.41 µg/L for the protection of human health and is based on a one-in-a-million cancer risk for waters from which both water and organisms are consumed. The MEC for chlorodibromomethane was 10.3 µg/L, based on 10 samples collected between October 2006 and April 2008. Chlorodibromomethane was not detected in the upstream receiving water in either Harding Drain or the San Joaquin River, based on six samples collected between May 2005 and April 2008. Therefore, the discharge has a reasonable potential to cause or contribute to an in-stream excursion above the CTR criterion for chlorodibromomethane.

No dilution is allowed for discharges to Harding Drain due to periods of no flow in Harding Drain. Therefore, an AMEL and MDEL for chlorodibromomethane of 0.41 µg/L and 0.78 µg/L, respectively, are included in this Order based on based on the CTR criterion for the protection of human health for discharges to Harding Drain (see Attachment F, Table F-20~~16~~ for WQBEL calculations).

The ambient monitoring demonstrates the San Joaquin River has assimilative capacity for chlorodibromomethane. As discussed above under carbon tetrachloride, and based on the use of the SIM procedure, all target chlorination byproducts concentrations were reported as "not detected" at a reporting limitation of 0.05 µg/L. As described in section IV.C.2.c.ii, a dilution credit for chlorodibromomethane of ~~up to 20:1~~19.9 can be granted, based on the available human health dilution. This Order includes an AMEL and MDEL for chlorodibromomethane of ~~7.3~~7.6 µg/L and 14 µg/L, respectively, based on the CTR criterion for the protection of human health for discharges to the San Joaquin River (see Attachment F, Table F-~~17~~ 21 for WQBEL calculations).

Based on the sample results for the effluent, the limitations appear to put the Discharger in immediate non-compliance for discharges to Harding Drain and the San Joaquin River. New or modified control measures may be necessary in order to comply with the effluent limitations, and the new or modified control measures cannot be designed, installed and put into operation within 30 calendar days. Furthermore, the effluent limitations for chlorodibromomethane are a new regulatory requirement within this permit, which becomes applicable to the waste discharge with the adoption of this Order, which was adopted after 1 July 2000. Therefore, a compliance time schedule for compliance with the chlorodibromomethane effluent limitations is established in TSO No. R5-2009-XXXX in accordance with CWC section 13300, that requires preparation and implementation of a pollution prevention plan in compliance with CWC section 13263.3.

m. **Copper.** The CTR includes hardness-dependent criteria for the protection of freshwater aquatic life for copper. The criteria for copper are presented in dissolved concentrations. USEPA recommends conversion factors to calculate dissolved criteria. The USEPA default conversion factors for copper in freshwater are 0.96 for both the acute and the chronic criteria. Using the reasonable worst-case representative ambient hardness of 89 mg/L as $CaCO_3$,

as described in section IV.C.2.b of this Fact Sheet, and the default conversion factors, the applicable chronic criterion (maximum 4-day average concentration) is 8.1~~1~~ µg/L and the applicable acute criterion (maximum 1-hour average concentration) is 12~~.04~~ µg/L, as dissolved concentrations.

As discussed in section IV.C.2.d of this Fact Sheet, the applicable site-specific acute and chronic translators for the discharge to Harding Drain and the San Joaquin River are 1.22/fD and 1.52/fD, respectively. Using the site-specific translators, the applicable acute criterion is 15 µg/L and the applicable chronic criterion is 12 µg/L, as total recoverable.

The MEC for total copper was 16 µg/L, based on 31 samples collected between October 2006 and April 2008 and reported in the Discharger's SMRs and Metals Translator Report. The maximum observed upstream receiving water total copper concentration in Harding Drain was 12 µg/L, based on six samples collected between May 2005 and April 2008. The maximum observed upstream receiving water total copper concentration in the San Joaquin River was 17 µg/L, based on 26 samples collected between May 2005 and April 2008.

The MEC for dissolved copper was 8 µg/L, based on 31 samples collected between October 2006 and April 2008. The maximum observed upstream receiving water dissolved copper concentration in Harding Drain was 2.7 µg/L, based on six samples collected between May 2005 and April 2008. The maximum observed upstream receiving water dissolved concentration in the San Joaquin River was 2.64 µg/L, based on 26 samples collected between May 2005 and April 2008.

Because total copper in the effluent exceeds the total chronic criterion for the discharges to Harding Drain and the San Joaquin River and dissolved copper in the effluent is present in the effluent at a concentration just slightly below the dissolved chronic criterion, the discharge has a reasonable potential to cause or contribute to an in-stream excursion above the CTR criterion for copper for discharges to both Harding Drain and the San Joaquin River.

As described in section IV.C.2.b of the Fact Sheet, the $ECA_{acute}$ and $ECA_{chronic}$ for discharges to both Harding Drain and the San Joaquin River were determined using ~~the minimum observed effluent~~ a hardness of 89 mg/L (as $CaCO_3$), which is protective under all discharge and mixing conditions. As also described in section IV.C.2.d of the Fact Sheet, the Regional Water Board has applied site-specific translators for copper. This results in an $ECA_{acute}$ and an $ECA_{chronic}$ for copper of 12 µg/L and 15 µg/L, respectively. Using the procedures for calculating WQBELs in section 1.4 of the SIP, ~~A~~an AMEL and MDEL for total copper of 8.9 µg/L and 15 µg/L, respectively, are included in this Order based on CTR criteria for the protection of freshwater aquatic life for discharges to Harding Drain and the San Joaquin River (see Attachment F, Table F-~~18~~ 22 for WQBEL calculations).

Based on the sample results for the effluent, the limitations appear to put the Discharger in immediate non-compliance for discharges to Harding Drain and the San Joaquin River. New or modified control measures may be necessary in order to comply with the effluent limitations, and the new or modified control measures cannot be designed, installed and put into operation within 30 calendar days. Furthermore, the effluent limitations for copper are a new regulatory requirement within this permit, which becomes applicable to the waste discharge with the adoption of this Order, which was adopted after 1 July 2000. Therefore, a compliance time schedule for compliance with the copper effluent limitations is established in TSO No. R5-2009-XXXX in accordance with CWC section 13300, that requires preparation and implementation of a pollution prevention plan in compliance with CWC section 13263.3.

n. **Diazinon and Chlorpyrifos.** The San Joaquin River has been identified on the 303(d) list as an impaired waterbody due to elevated concentrations of diazinon and chlorpyrifos. The Regional Water Board completed a TMDL for diazinon and chlorpyrifos in the lower San Joaquin River and amended the Basin Plan to include water quality objectives and waste load allocations. The Basin Plan Amendment for the Control of Diazinon and Chlorpyrifos Runoff into the Lower San Joaquin River was adopted by the Regional Water Board on 21 October 2005, and was approved by the State Water Board on 2 May 2006. The Basin Plan amendment was approved by the Office of Administrative Law on 30 June 2006, and is now state law. The amendment was approved by USEPA and went into effect on 20 December 2006.

The amendment "…*modifies the Basin Plan Chapter III (Water Quality Objectives) to establish site specific numeric objectives for chlorpyrifos and diazinon in the San Joaquin River, and identifies the requirement to meet the additive toxicity formula already in Basin Plan Chapter IV (Implementation), for the additive toxicity of diazinon and chlorpyrifos.*"

The amendment provides that: "*The Waste Load Allocations (WLA's) for all NPDES-permitted dischargers.. shall not exceed the sum (S) of one (1) as defined below.*

*where*

$$S = \frac{C_D}{WQO_D} + \frac{C_C}{WQO_C} \leq 1.0$$

*$C_D$ = diazinon concentration in µg/L of point source discharge for the WLA.*
*$C_C$ = chlorpyrifos concentration in µg/L of point source discharge for the WLA.*
*$WQO_D$ = acute or chronic diazinon water quality objective in µg/L.*
*$WQO_C$ = acute or chronic chlorpyrifos water quality objective in µg/L.*

*Available samples collected within the applicable averaging period for the water quality objective will be used to determine compliance with the allocations and loading capacity. For purposes of calculating the sum (S) above, analytical*

*results that are reported as "non-detectable" concentrations are considered to be zero.*"

Water quality objectives for diazinon and chlorpyrifos to be used in the additive toxicity WLA were included in the amendment and are incorporated into the Basin Plan as shown below:

**Table F-128. Site-Specific Water Quality Objectives for Diazinon and Chlorpyrifos**

| Pesticide | Maximum Concentration and Averaging Period | Applicable Water Bodies |
|---|---|---|
| Chlorpyrifos | 0.025 µg/L; 1-hour average (acute) | San Joaquin River from Mendota Dam to Vernalis (Reaches include Mendota Dam to Sack Dam (70), Sack Dam to Mouth of Merced River (71), Mouth of Merced River to Vernalis (83)) |
| | 0.015 µg/L; 4-day average (chronic)<br>Not to be exceeded more than once in a 3 year period. | |
| Diazinon | 0.16 µg/L; 1-hour average (acute) | |
| | 0.10 µg/L; 4-day average (chronic)<br>Not to be exceeded more than once in a 3 year period. | |

In terms of a schedule for compliance with the WLA, the Basin Plan amendment provides that "*Compliance with applicable water quality objectives, load allocations, and waste load allocations for diazinon and chlorpyrifos in the San Joaquin River is required by December 1, 2010.*"

Results of effluent monitoring conducted by the Discharger using Method EPA 622, from October 2006 through April 2008, indicate concentrations of diazinon and chlorpyrifos have been less than the analytical reporting limit or 0.08 µg/L. Diazinon and chlorpyrifos can now be analyzed using EPA Method 8141A, EPA Method 625M or an equivalent GC/MS method to reporting limits of 0.020 µg/L and 0.010 µg/L, respectively. Since diazinon and chlorpyrifos have not been detected in the effluent, this Order does not include effluent limitations for these pollutants. However, this Order includes new monitoring requirements that specify a lower reporting limit sufficient for comparison with the applicable diazinon and chlorpyrifos water quality objectives and for use in the additive toxicity calculation. If diazinon and/or chlorpyrifos are detected in the effluent at a level with the reasonable potential to exceed the water quality objectives, this Order may be reopened to include effluent limitations for diazinon and chlorpyrifos.

o. **Dichlorobromomethane.** The CTR includes a dichlorobromomethane criterion of 0.56 µg/L for the protection of human health and is based on a one-in-a-million cancer risk for waters from which both water and organisms are consumed. The MEC for dichlorobromomethane was 28.9 µg/L, based on 19 samples collected between October 2006 and April 2008. Dichlorobromomethane was not detected

in the upstream receiving water in either Harding Drain or the San Joaquin River, based on six samples collected between May 2005 and April 2008. Therefore, the discharge has a reasonable potential to cause or contribute to an in-stream excursion above the CTR criterion for dichlorobromomethane.

No dilution is allowed for discharges to Harding Drain due to periods of no flow in Harding Drain. Therefore, an AMEL and MDEL for dichlorobromomethane of 0.56 µg/L and 0.81 µg/L, respectively, are included in this Order based on based on the CTR criterion for the protection of human health for discharges to Harding Drain (see Attachment F, Table F-23~~19~~ for WQBEL calculations).

The ambient monitoring demonstrates the San Joaquin River has assimilative capacity for dichlorobromomethane. As discussed above under carbon tetrachloride, and based on the use of the SIM procedure, all target chlorination byproducts concentrations were reported as "not detected" at a reporting limitation of 0.05 µg/L. As described in section IV.C.2.c.ii, a dilution credit for dichlorobromomethane of ~~up to 20:1~~19.9 can be granted, based on the available human health dilution. This Order includes an AMEL and MDEL for dichlorobromomethane of ~~10~~ 11 µg/L and ~~15~~ 16 µg/L, respectively, based on the CTR criterion for the protection of human health for discharges to the San Joaquin River (see Attachment F, Table F-~~20~~ 24 for WQBEL calculations).

Based on the sample results for the effluent, the limitations appear to put the Discharger in immediate non-compliance for discharges to Harding Drain and the San Joaquin River. New or modified control measures may be necessary in order to comply with the effluent limitations, and the new or modified control measures cannot be designed, installed and put into operation within 30 calendar days. Furthermore, the effluent limitations for dichlorobromomethane are a new regulatory requirement within this permit, which becomes applicable to the waste discharge with the adoption of this Order, which was adopted after 1 July 2000. Therefore, a compliance time schedule for compliance with the dichlorobromomethane effluent limitations is established in TSO No. R5-2009-XXXX in accordance with CWC section 13300, that requires preparation and implementation of a pollution prevention plan in compliance with CWC section 13263.3.

p. **Dissolved Oxygen.** The Basin Plan contains a water quality objective for dissolved oxygen requiring that the dissolved oxygen concentrations of waters designated as COLD and SPWN shall not be reduced below 7.0 mg/L at any time. Prior to the adoption of Order No. 5-01-122, the Discharger was governed by Order No. 95-059, which included secondary treatment standards for $BOD_5$ and allowed the dissolved oxygen concentration in Harding Drain to be as low as 5.0 mg/L. Additionally, review of receiving water monitoring indicated that dissolved oxygen levels in Harding Drain downstream of the discharge occasionally dropped below the Basin Plan objectives for dissolved oxygen and the San Joaquin River downstream and upstream of the discharge occasionally dropped below the Basin Plan objectives for dissolved oxygen. In order to

ensure compliance with the Basin Plan objectives and receiving water limitations for dissolved oxygen, Order No. 5-01-122 contained a final effluent limitation that required the dissolved oxygen concentration of the discharge not be reduced below 7.5 mg/L. Order No. 5-01-122 also required the Discharger to conduct a study to determine if the proposed tertiary treatment requirements for $BOD_5$ would be fully protective of the beneficial uses of the receiving waters.

The Discharger submitted their study on 1 July 2003 and concluded that the tertiary treatment requirements for $BOD_5$ would be sufficient to protect downstream dissolved oxygen levels in the receiving waters. Since the completion of the tertiary treatment facilities, the Discharger has maintained compliance with the effluent limitations for $BOD_5$. The dissolved oxygen concentration in the effluent was below the effluent concentration of 7.5 mg/L on 18 June 2007 with a concentration of 7.1 mg/L, however the remaining 578 samples taken between October 2006 and April 2008 were above the effluent limitation of 7.5 mg/L. All effluent samples were above the water quality objective for dissolved oxygen of 7.0 mg/L. Additionally, the downstream receiving water concentration in Harding Drain was below the water quality objective only twice on 1 August 2007 and 26 September 2007 out of 83 samples taken between October 2006 and April 2008. On both occasions, the effluent concentration was above the water quality objective for dissolved oxygen. Therefore, the Regional Water Board finds that the tertiary treatment limitations for $BOD_5$ effectively protect downstream beneficial uses and that the discharge does not exhibit reasonable potential to cause or contribute to an exceedance of the water quality objective for dissolved oxygen. Therefore, this Order does not retain the effluent limitation for dissolved oxygen from Order No. 5-01-122. However, this Order does retain effluent and receiving water monitoring and receiving water limitations for dissolved oxygen in order to continue evaluation of the effects of the discharge on the receiving water.

q. **Iron.** The Basin Plan water quality objectives for chemical constituents requires that water designated for use as domestic or municipal supply (MUN) shall not contain concentrations of chemical constituents in excess of the maximum contaminant levels (MCLs) specified in Title 22 of the CCR. The Secondary MCL - Consumer Acceptance Limit for iron is 300 µg/L. Based on input from DPH and the fact that secondary MCLs are designed to protect consumer acceptance, effluent limitations based on secondary MCLs are applied as an annual average concentration.

The maximum annual average effluent concentration for iron was 148 µg/L, based on 14 samples collected between April 2007 and April 2008. The maximum annual average upstream receiving water iron concentration in Harding Drain was 218 µg/L, based on two samples collected during the period from August 2006 through August 2007. The maximum annual average upstream receiving water iron concentration in the San Joaquin River was 2,353 µg/L, based on two samples collected during the period from August 2006 through August 2007. The maximum annual average receiving water and

effluent concentrations were used in the RPA for evaluating the secondary MCL based on input from the DPH and the fact that MCLs are designed to protect human health over long exposure periods. Therefore, it was considered appropriate to analyze reasonable potential based on an annual average concentration. As a result there is no reasonable potential for iron to exceed applicable objectives in Harding Drain. However, because concentrations of iron in the San Joaquin River exceed the Secondary MCL and iron was detected in the effluent, a reasonable potential exists to cause or contribute to an in-stream excursion above the Secondary MCL for iron in the San Joaquin River. An annual average effluent limitation of 300 µg/L for iron is included in this Order based on protection of the Basin Plan's narrative chemical constituents objective for discharges to the San Joaquin River.

The MEC for iron of 300 µg/L is equivalent to the applicable annual average effluent limitation. Additionally, the annual average for iron in 2007 was 133 µg/L and in 2008 was 144 µg/L, which are below the applicable annual average effluent limitation. Therefore, it appears the Discharger can immediately comply with these limitations.

r. **Lead.** The CTR includes hardness dependent criteria for the protection of freshwater aquatic life for lead. As discussed in section IV.C.2.c of this Fact Sheet, receiving water hardness data is not available for Harding Drain. Therefore, to determine reasonable potential for lead in discharges to Harding Drain, aquatic life criteria were developed using the default conversion factors and ~~the lowest observed hardness of the effluent~~a hardness of 89 mg/L (as $CaCO_3$). The applicable acute (1-hour average) criterion is 70 µg/L and the applicable chronic (4-day average) criterion is 2.7 µg/L, as total recoverable. The MEC for lead was 1.4 µg/L, based on 32 samples collected between October 2006 and April 2008. The maximum observed upstream receiving water lead concentration in Harding Drain was 2 µg/L, based on six samples collected between May 2005 and August 2007. Therefore, lead in the discharge to Harding Drain does not exhibit reasonable potential to exceed water quality criteria for lead.

Reasonable potential to exceed the hardness-dependent criteria for lead in the San Joaquin River was determined using the reasonable worst-case downstream receiving water hardness ~~minimum observed effluent hardness~~ and the maximum effluent lead concentration during the period from October 2006 through April 2008.~~, and~~ For the receiving water, paired upstream receiving water hardness and upstream receiving water lead concentrations from May 2005 through April 2008 were evaluated. On 21 June 2006, the background receiving water lead concentration of 1.52 µg/L exceeded the chronic aquatic life criterion of 1.1 µg/L, which was determined using the observed upstream receiving water hardness of 44 mg/L on the same day. Therefore, no assimilative capacity is available for lead in the San Joaquin River. Because there is no assimilative capacity for lead, and lead was detected in the effluent, lead in the discharge to the San Joaquin River has a reasonable potential to

cause or contribute to an in-stream excursion above the CTR criterion for the protection of freshwater aquatic life.

As discussed in section IV.C.2.d of this Fact Sheet, the applicable site-specific acute and chronic translators for the discharge to the San Joaquin River are 1.08/fD and 1.32/fD, respectively. As described in section IV.C.2.b~~c~~ of the Fact Sheet, the $ECA_{acute}$ and $ECA_{chronic}$ for lead were ~~iteratively~~ determined ~~assuming the minimum observed upstream receiving water hardness, a maximum upstream lead concentration of 1.5~~2 µg/L, ~~and the effluent at the minimum observed~~ using the reasonable worst-case downstream hardness. Using the criteria determined using ~~the iterative~~this process and the site-specific translators results in an $ECA_{acute}$ for lead of 55 µg/L and an $ECA_{chronic}$ of 2.9 µg/L. Using the procedures for calculating WQBELs in section 1.4 of the SIP, ~~T~~an~~his Order contains a final~~ AMEL and MDEL for lead ~~as~~ of 2.6 µg/L and 3.9 µg/L, respectively, are included in this Order ~~and as shown in Table F-21 of this Fact Sheet,~~ based on the CTR criterion for the protection of freshwater aquatic life for discharges to the San Joaquin River (see Attachment F, Table F-25 for WQBEL calculations).

The MEC for lead of 1.4 µg/L indicates that the Discharger can immediately comply with these limitations.

s. **Manganese.** The Basin Plan water quality objectives for chemical constituents requires that water designated for use as domestic or municipal supply (MUN) shall not contain concentrations of chemical constituents in excess of the maximum contaminant levels (MCLs) specified in Title 22 of the CCR. The Secondary MCL - Consumer Acceptance Limit for manganese is 50 µg/L. Based on input from DPH and the fact that secondary MCLs are designed to protect consumer acceptance, effluent limitations based on secondary MCLs are applied as an annual average concentration.

The maximum annual average effluent concentration for manganese was 22 µg/L, based on 14 samples collected between April 2007 and April 2008. The maximum annual average upstream receiving water manganese concentration in Harding Drain was 15 µg/L, based on three samples collected during the period from May 2006 through May 2007. The maximum annual average upstream receiving water manganese concentration in the San Joaquin River was 185 µg/L, based on two samples collected during the period from August 2006 through August 2007. The maximum annual average receiving water and effluent concentrations were used in the RPA for evaluating the secondary MCL based on input from the DPH and the fact that MCLs are designed to protect human health over long exposure periods. Therefore, it was considered appropriate to analyze reasonable potential based on an annual average concentration. As a result there is no reasonable potential for manganese to exceed applicable objectives in Harding Drain. However, because concentrations of manganese in the San Joaquin River exceed the Secondary MCL and manganese was detected in the effluent, a reasonable potential exists

to cause or contribute to an in-stream excursion above the Secondary MCL for manganese in the San Joaquin River. An annual average effluent limitation of 50 µg/L for manganese is included in this Order based on protection of the Basin Plan's narrative chemical constituents objective for discharges to the San Joaquin River.

The MEC for manganese of 50 µg/L is equivalent to the applicable annual average effluent limitation. Additionally, the highest annual average for manganese was 22 µg/L, which is below the applicable annual average effluent limitation. Therefore, it appears the Discharger can immediately comply with these limitations.

t. **Mercury.** The current USEPA National Ambient Water Quality Criteria for protection of freshwater aquatic life, continuous concentration, for mercury is 0.77 µg/L (30-day average, chronic criteria). The CTR contains a human health criterion (based on a threshold dose level causing neurological effects in infants) of 0.050 µg/L for waters from which both water and aquatic organisms are consumed. Both values are controversial and subject to change. In 40 CFR Part 131, USEPA acknowledges that the human health criteria may not be protective of some aquatic or endangered species and that "…*more stringent mercury limits may be determined and implemented through use of the State's narrative criterion.*" In the CTR, USEPA reserved the mercury criteria for freshwater and aquatic life and may adopt new criteria at a later date.

The MEC for mercury was 0.0134 µg/L. While concentrations in the effluent do not exceed the existing ambient water quality and human health criteria published by USEPA, the San Joaquin River from the Merced River to the Tuolumne River and the Sacramento-San Joaquin Delta downstream of the discharge have been listed as an impaired water body pursuant to Section 303(d) of the Clean Water Act for mercury, based on fish tissue concentration and not water column toxicity. The California DPH has issued health warnings regarding the consumption of fish from Delta waterways, and health advisories by the Cal/EPA Office of Environmental Health Hazard Assessment remain in effect for human consumption of fish in the Delta due to excessive concentrations of mercury in fish tissue. Additional loading resulting from the discharge from the Facility has the potential to cause or contribute to the impairment resulting from mercury bioaccumulation in the Delta.

The SIP recommends the Regional Water Board consider whether the mass loading of bioaccumulative pollutants should be limited in the interim to "representative current levels" pending development of applicable water quality standards or TMDL allocation. The intent is, at a minimum, to prevent further impairment while a TMDL for a particular bioaccumulative constituent is being developed. Any increase in loading of mercury to an already impaired water body would further degrade water quality.

This Order contains an interim performance-based mass effluent limitation of

0.82 lbs/year for mercury for the effluent discharged to the receiving water. This limitation is based on maintaining the mercury loading at the current level until a TMDL can be established and USEPA develops mercury standards that are protective of human health. The mass limitation was derived using the MEC and the design average daily flow rate of the current treatment plant (20 MGD):

(0.0000134 mg/L) * 20 MGD * 8.34 * [365 days/year] = 0.82 lbs/year

If the Regional Water Board determines that a mercury offset program is feasible for Dischargers subject to a NPDES permit, this Order may be reopened to reevaluate the interim mercury mass loading limitation(s) and the need for a mercury offset program.

u. **Methylene Blue Active Substances (MBAS).** The Basin Plan water quality objectives for chemical constituents requires that water designated for use as domestic or municipal supply (MUN) shall not contain concentrations of chemical constituents in excess of the maximum contaminant levels (MCLs) specified in Title 22 of the CCR. The Secondary MCL - Consumer Acceptance Limit for MBAS is 500 µg/L. Based on input from DPH and the fact that secondary MCLs are designed to protect consumer acceptance, effluent limitations based on secondary MCLs are applied as an annual average concentration.

The maximum annual average effluent concentration for MBAS was 180 µg/L, based on 25 samples collected between October 2006 and October 2007. Upstream receiving water monitoring information for MBAS is not available for Harding Drain or the San Joaquin River. Therefore, the discharge does not have a reasonable potential to cause or contribute to an in-stream excursion above the Secondary MCL for MBAS.

v. **Nitrate.** Untreated domestic wastewater contains ammonia. Nitrification is a biological process that converts ammonia to nitrite and nitrite to nitrate. Denitrification is a process that converts nitrate to nitrite or nitric oxide and then to nitrous oxide or nitrogen gas, which is then released to the atmosphere. Nitrate and nitrite are known to cause adverse health effects in humans. DPH has adopted a Primary MCL at Title 22 CCR, Table 64431-A, for the protection of human health for nitrate equal to 10 mg/L (measured as nitrogen). Title 22 CCR, Table 64431 A, also includes a primary MCL of 10,000 µg/L for the sum of nitrate and nitrite, measured as nitrogen.

For nitrate, USEPA has developed Drinking Water Standards (10,000 µg/L as Primary MCL) and NAWQC for protection of human health (10,000 µg/L for non-cancer health effects). Recent toxicity studies have indicated a possibility that nitrate is toxic to aquatic organisms.

Inadequate or incomplete denitrification may result in the discharge of nitrate and/or nitrite to the receiving stream. The conversion of ammonia to nitrites and the conversion of nitrites to nitrates present a reasonable potential for the

discharge to cause or contribute to an in-stream excursion above the Primary MCLs for nitrate. In addition, the MEC for nitrate, based on ~~19~~ 35 samples taken between 9 October 2006 and ~~1 April 2008~~8 July 2009, was reported as ~~25~~ 31 mg/L. Therefore, an AMEL for nitrate of 10 mg/L is included in this Order based on the Primary MCL for discharges to Harding Drain. This effluent limitation is included in this Order to assure the treatment process adequately nitrifies and denitrifies the waste stream to protect the beneficial use of municipal and domestic supply.

As described in section IV.C.2.c, the Regional Water Board concurs with the use of a performance-based effluent limitation of ~~26~~ 31 mg/L to serve as the basis for the effluent limitation for discharges to the San Joaquin River to assure the treatment process adequately nitrifies and denitrifies the waste stream to protect the beneficial use of municipal and domestic supply.

Based on the sample results for the effluent, the limitations appear to put the Discharger in immediate non-compliance for discharges to Harding Drain. New or modified control measures may be necessary in order to comply with the effluent limitations, and the new or modified control measures cannot be designed, installed and put into operation within 30 calendar days. Furthermore, the effluent limitations for nitrate are a new regulatory requirement within this permit, which becomes applicable to the waste discharge with the adoption of this Order, which was adopted after 1 July 2000. Therefore, a compliance time schedule for compliance with the nitrate effluent limitations is established in TSO No. R5-2009-XXXX in accordance with CWC section 13300, that requires preparation and implementation of a pollution prevention plan in compliance with CWC section 13263.3.

w. **Oil and Grease.** Order No. 5-01-122 included numeric monthly average and daily maximum effluent limitations of 10 mg/L (1,668 lbs/day) and 15 mg/L (2,502 lbs/day), respectively. The MEC for oil and grease was 11 mg/L, based on 38 samples collected between October 2006 and April 2008. The highest monthly average for oil and grease was 9.15 mg/L. However, since November 2007, oil and grease has been reported as non-detect (at an analytical detection level of 5.0 mg/L). Therefore, monitoring data for oil and grease indicates that there is no reasonable potential to exceed water quality objectives. Furthermore, oil and grease used to be a problem at many POTWs and was a necessary effluent limit to protect receiving waters, but implementation of fats oils and grease (FOG) pretreatment programs in conjunction with improved levels of treatment have resulted in an overall reduction of oil and grease in wastewater treatment plant effluent. Therefore, as described in section IV.D.3, oil and grease effluent limitations have not been retained in this Order.

x. **Pathogens**. The beneficial uses of the Harding Drain and the San Joaquin River include municipal and domestic supply, water contact recreation, and agricultural irrigation supply, and there is, at times, less than 20:1 dilution. To protect these beneficial uses, the Regional Water Board finds that the wastewater must be

disinfected and adequately treated to prevent disease. The principal infectious agents (pathogens) that may be present in raw sewage may be classified into three broad groups: bacteria, parasites, and viruses. Tertiary treatment, consisting of chemical coagulation, sedimentation, and filtration, has been found to remove approximately 99.5% of viruses. Filtration is an effective means of reducing viruses and parasites from the waste stream. The wastewater must be treated to tertiary standards (filtered), or equivalent, to protect contact recreational and food crop irrigation uses.

The California Department of Public Health (DPH) has developed reclamation criteria, CCR, Division 4, Chapter 3 (Title 22), for the reuse of wastewater. Title 22 requires that for spray irrigation of food crops, parks, playgrounds, schoolyards, and other areas of similar public access, wastewater be adequately disinfected, oxidized, coagulated, clarified, and filtered, and that the effluent total coliform levels not exceed 2.2 MPN/100 mL as a 7-day median. As coliform organisms are living and mobile, it is impracticable to quantify an exact number of coliform organisms and to establish weekly average limitations. Instead, coliform organisms are measured as a most probable number and regulated based on a 7-day median limitation.

Title 22 also requires that recycled water used as a source of water supply for non-restricted recreational impoundments be disinfected tertiary recycled water that has been subjected to conventional treatment. A non-restricted recreational impoundment is defined as "*…an impoundment of recycled water, in which no limitations are imposed on body-contact water recreational activities.*" Title 22 is not directly applicable to surface waters; however, the Regional Water Board finds that it is appropriate to apply an equivalent level of treatment to that required by DPH's reclamation criteria because the receiving water is used for irrigation of agricultural land and for contact recreation purposes. The stringent disinfection criteria of Title 22 are appropriate since the undiluted effluent may be used for the irrigation of food crops and/or for body-contact water recreation. Coliform organisms are intended as an indicator of the effectiveness of the entire treatment train and the effectiveness of removing other pathogens. The method of treatment is not prescribed by this Order; however, wastewater must be treated to a level equivalent to that recommended by DPH.

In addition to coliform testing, an operational specification for turbidity has been included as a second indicator of the effectiveness of the treatment process and to assure compliance with the required level of treatment. The tertiary treatment process, or equivalent, is capable of reliably meeting a turbidity limitation of 2 nephelometric turbidity units (NTU) as a daily average. Failure of the filtration system such that virus removal is impaired would normally result in increased particles in the effluent, which result in higher effluent turbidity. Turbidity has a major advantage for monitoring filter performance, allowing immediate detection of filter failure and rapid corrective action. Coliform testing, by comparison, is not conducted continuously and requires several hours, to days, to identify high coliform concentrations.

This Order contains effluent limitations and a tertiary level of treatment, or equivalent, necessary to protect the beneficial uses of the receiving water. The Regional Water Board has previously considered the factors in CWC section 13241 in establishing these requirements.

y. **pH.** The Basin Plan includes a water quality objective for surface waters (except for Goose Lake) that the "…*pH shall not be depressed below 6.5 nor raised above 8.5. Changes in normal ambient pH levels shall not exceed 0.5 in fresh waters with designated COLD or WARM beneficial uses.*" Effluent Limitations for pH are included in this Order based on the Basin Plan objectives for pH for discharges to Harding Drain and the San Joaquin River.

z. **Salinity.** The discharge contains total dissolved solids, chloride, sulfate, and electrical conductivity. These are water quality parameters that are indicative of the salinity of the water. Their presence in water can be growth limiting to certain agricultural crops and can affect the taste of water for human consumption. There are no USEPA water quality criteria for the protection of aquatic organisms for these constituents. The Basin Plan contains a chemical constituent objective that incorporates State MCLs, contains a narrative objective, and contains numeric water quality objectives for electrical conductivity, total dissolved solids, sulfate, and chloride.

**Table F-139. Salinity Water Quality Criteria/Objectives**

| Parameter | Agricultural WQ Goal[1] | Secondary MCL[3] | Basin Plan | Effluent | |
|---|---|---|---|---|---|
| | | | | Average | Maximum |
| EC (µmhos/cm) | Varies[2] | 900; 1,600; 2,200 | 700 (1 Apr – 31 Aug)<br>1,000(1 Sep – 31 Mar)[4] | 913 | 1,198 |
| TDS (mg/L) | Varies | 500; 1,000; 1,500 | 500, 1000, 1500 | 556 | 722 |
| Sulfate (mg/L) | Varies | 250, 500, 600 | 250, 500, 600 | 60 | 81 |
| Chloride (mg/L) | Varies | 250, 500, 600 | 250, 500, 600 | 123 | 154 |

[1] Agricultural water quality goals based on *Water Quality for Agriculture*, Food and Agriculture Organization of the United Nations—Irrigation and Drainage Paper No. 29, Rev. 1 (R.S. Ayers and D.W. Westcot, Rome, 1985)

[2] The EC level in irrigation water that harms crop production depends on the crop type, soil type, irrigation methods, rainfall, and other factors. An EC level of 700 umhos/cm is generally considered to present no risk of salinity impacts to crops. However, many crops are grown successfully with higher salinities.

[3] The secondary MCLs are stated as a recommended level, upper level, and a short-term maximum level.

[4] Applies in the San Joaquin River at Airport Way Bridge near Vernalis.

i. **Chloride**. The secondary MCL for chloride is 250 mg/L, as a recommended level, 500 mg/L as an upper level, and 600 mg/L as a short-term maximum. The recommended agricultural water quality goal for chloride, that would apply the narrative chemical constituent objective, is 106 mg/L as a long-term average based on Water Quality for Agriculture, Food and Agriculture Organization of the United Nations—Irrigation and Drainage Paper No. 29, Rev. 1 (R.S. Ayers and D.W. Westcot, Rome, 1985). The 106 mg/L water quality goal is intended to protect against adverse effects on sensitive crops when irrigated via sprinklers.

USEPA developed National Recommended Ambient Water Quality Criteria for protection of freshwater aquatic life for chloride. The recommended 4-day average (chronic) and 1-hour average (acute) criteria for chloride are 230 mg/L and 860 mg/L, respectively. USEPA recommends that the ambient criteria are protective of the aquatic life beneficial uses of receiving waters in lieu of site-specific criteria.

Chloride concentrations in the effluent ranged from 105 mg/L to 154 mg/L, with an average of 123 mg/L, for 32 samples collected by the Discharger from October 2006 through April 2008. Chloride was detected in the effluent at a concentration of 384 mg/L. However, this sample was considered an outlier and was not used in the reasonable potential analysis. The dataset was represented by a standard deviation of 13 and a mean of 123. Therefore, the high sample concentration was 20 standard deviations from the mean, which is considered an outlier (4 standard deviations is considered an outlier). Background receiving water monitoring for chloride is not available for Harding Drain. The maximum observed upstream chloride concentration in the San Joaquin River was 487 mg/L, based on 20 samples collected between May 2005 and April 2008. Concentrations of chloride in the effluent and the San Joaquin River exceed the agricultural water quality goal of 106 mg/L, and concentrations of chloride in the San Joaquin River exceed the USEPA National Recommended Ambient Water Quality Criteria for protection of freshwater aquatic life for chloride of 230 mg/L.

ii. **Electrical Conductivity**. The secondary MCL for electrical conductivity is 900 µmhos/cm as a recommended level; 1,600 µmhos/cm as an upper level; and 2,200 µmhos/cm as a short-term maximum. The State Water Board has established salinity standards in the Bay-Delta Plan. The Bay-Delta Plan prescribes numeric electrical conductivity standards to protect agricultural irrigation at several locations in the Sacramento – San Joaquin Delta, including in the San Joaquin River at Airport Way Bridge near Vernalis, downstream of the discharge. The salinity objectives for this station include 700 µmhos/cm during the irrigation season (April through August) and 1,000 µmhos/cm during the non-irrigation season (September through March).

A review of the Discharger's monitoring reports from October 2006 through April 2008 shows an average effluent electrical conductivity of 913 µmhos/cm, with a range from 690 µmhos/cm to 1,198 µmhos/cm for 578 samples. These levels exceed the applicable objectives. The background receiving water electrical conductivity concentration in Harding Drain averaged 433 µmhos/cm in 141 sampling events collected by the Discharger from May 2005 through April 2008. The background receiving water electrical conductivity concentration in the San Joaquin River averaged 865 µmhos/cm in 157 sampling events collected by the Discharger from May 2005 through April 2008.

iii. **Sulfate**. The secondary MCL for sulfate is 250 mg/L as a recommended level, 500 mg/L as an upper level, and 600 mg/L as a short-term maximum. Sulfate concentrations in the effluent ranged from 39 mg/L to 81 mg/L, with an average of 60 mg/L, for 15 samples collected by the Discharger from October 2006 through April 2008. Background receiving water monitoring for sulfate is not available for Harding Drain. The maximum observed upstream sulfate concentration in the San Joaquin River was 297 mg/L.

iv. **Total Dissolved Solids.** The secondary MCL for total dissolved solids is 500 mg/L as a recommended level; 1,000 mg/L as an upper level; and 1,500 mg/L as a short-term maximum. The recommended agricultural water quality goal for total dissolved solids, that would apply the narrative chemical constituent objective, is 450 mg/L as a long-term average based on Water Quality for Agriculture, Food and Agriculture Organization of the United Nations—Irrigation and Drainage Paper No. 29, Rev. 1 (R.S. Ayers and D.W. Westcot, Rome, 1985). Water Quality for Agriculture evaluates the impacts of salinity levels on crop tolerance and yield reduction, and establishes water quality goals that are protective of the agricultural uses. The 450 mg/L water quality goal is intended to prevent reduction in crop yield, i.e. a restriction on use of water, for salt-sensitive crops. Only the most salt sensitive crops require irrigation water of 450 mg/L or less to prevent loss of yield. Most other crops can tolerate higher total dissolved solids concentrations without harm, however, as the salinity of the irrigation water increases, more crops are potentially harmed by the total dissolved solids, or extra measures must be taken by the farmer to minimize or eliminate any harmful impacts.

The average total dissolved solids effluent concentration was 556 mg/L; concentrations ranged from 408 mg/L to 722 mg/L for 166 samples collected by the Discharger from October 2006 through April 2008. These concentrations exceed the applicable water quality objectives. Background receiving water monitoring for total dissolved solids is not available for either Harding Drain or the San Joaquin River.

v. **Salinity Effluent Limitations.** Chloride in the discharge has a reasonable potential to cause or contribute to an in-stream excursion above a level necessary to protect aquatic life resulting in a violation of the Basin Plan's narrative toxicity objective. Therefore, this Order contains a final AMEL and MDEL for chloride of 203 mg/L and 328 mg/L, respectively, based on USEPA's National Ambient Water Quality Criteria for the protection of freshwater aquatic life (see Attachment F, Table F-~~15~~ 19 for WQBEL calculations). Based on monitoring data, it appears the Discharger can immediately comply with these effluent limitations.

The San Joaquin River in the vicinity of the discharge is included on the 303(d) list as an impaired water body due to elevated electrical conductivity levels. Salinity levels in the lower San Joaquin River are affected by both the salt loads and the quantity of flow in the river. High salt loads result from a

combination of upstream water diversions, discharges of saline drainage water, and subsurface accretions to the San Joaquin River from groundwater. Studies have indicated that non-point sources, primarily return flows from irrigated agriculture and wetland areas, contribute the majority of the controllable discharges of salt.

The Regional Water Board completed a TMDL for salt and boron in the lower San Joaquin River and amended the Basin Plan to include water quality objectives and waste load allocations. The Basin Plan Amendment for the Control of Salt and Boron Discharges into the Lower San Joaquin River was adopted by the Regional Water Board on 10 September 2004, by Resolution No. R5-2004-0108, and was approved by the State Water Board, the Office of Administrative Law and USEPA. According to the control program associated with the Basin Plan amendment, "*The salt and boron control program establishes salt load limits to achieve compliance at the Airport Way Bridge near Vernalis with salt and boron water quality objectives for the LSJR*.", and according to the TMDL report associated with the Basin Plan amendment, the two major NPDES permittees in this area (one of which is the Discharger) "*account for no more than two percent of the total salt load at Vernalis*." The control program establishes waste load allocations for point source discharges of salt in the basin, and the Basin Plan amendment includes compliance schedules to comply with the control program. The control program's goal "*is to achieve compliance with salt and boron water quality objectives without restricting the ability of dischargers to export salt out of the San Joaquin River basin…The Regional Board encourages real-time water quality management and pollutant trading of waste load allocations, load allocations, and supply water allocations as a means for attaining salt and boron water quality objectives while maximizing the export of salts out of the LSJR watershed*."

The control program provides that "*Existing NPDES point source dischargers are low priority and subject to the compliance schedules for low priority discharges in Table IV-6.. Low priority discharges have 16 years (Wet through Dry Water Year Types) and 20 years (Critical Water Year Types) from the effective date of the control program to comply with the TMDL allocations.*"

The State Water Board's 1995 Bay-Delta Plan contains salinity objectives for the San Joaquin River at Vernalis to protect agricultural and beneficial uses of water in the southern Delta. The existing salinity water quality objectives for the San Joaquin River at Vernalis are 1,000 µmhos/cm between 1 September and 31 March, and 700 µmhos/cm between 1 April and 31 August.

The Discharger has no treatment facilities specific to salinity, and therefore, cannot currently comply with the final effluent limitations based on the control program waste load allocations. Results of monitoring conducted by the Discharger from October 2006 through April 2008 indicate the average electrical conductivity concentration in the effluent was 913 µmhos/cm, with

concentrations that ranged from 690 µmhos/cm to 1,198 µmhos/cm. Electrical conductivity levels in Harding Drain from May 2005 through April 2008 ranged from 73 µmhos/cm to 1,407 µmhos/cm. Electrical conductivity levels in the San Joaquin River from May 2005 through April 2008 ranged from 104 µmhos/cm to 1,651 µmhos/cm. Compliance with State Water Board's 1995 Bay-Delta Plan salinity objectives for San Joaquin River at Vernalis could require use of reverse osmosis or similar salt removal technologies, but may not ultimately be necessary due to other activities required by the TMDL.

Final WQBELs for salinity have been established in this Order with full compliance required by ~~1 January 2016~~28 July 2022 for all water year types except critically dry and 28 July 206 for critically dry years. ~~Although the TMDL does not require final compliance with the water quality objectives for salinity until 28 July 2022 (28 July 2026 for critically dry years), it is unknown whether the compliance schedule allowed by the TMDL is as short as practicable for the Facility. Therefore, the Regional Water Board finds that it is appropriate to establish an initial compliance schedule allowing 8 years to come into compliance with the final effluent limitations, with the option to evaluate extending the compliance schedule with each permit renewal (i.e., every 5 years).~~The compliance schedule is consistent with the State Water Board's Policy for Compliance Schedules in National Pollutant Discharge Elimination System Permits (Resolution No. 2008-0025), which states that "*A Water Board may establish a compliance schedule that exceeds ten years in a permit that either: (1) is a single permitting action, as defined in this Policy, or (2) has a permit limitation that implements or is consistent with the waste load allocations specified in a TMDL that is established through a Basin Plan amendment, provided that the TMDL implementation plan contains a compliance schedule or implementation schedule.*" Consistent with the State Water Board's recommendations, this Order requires the Discharger to develop and implement a salinity source control program that will identify and implement measures to reduce salinity in the discharge to the San Joaquin River~~, and to participate financially in the development of the Central Valley Salinity Management Plan at a level commensurate with its contributions of salinity to the San Joaquin River~~. This Order also contains an interim performance based effluent limitation for electrical conductivity of 979 µmhos/cm applied as an annual average. This interim performance-based effluent limitation was calculated as described in section IV.E.2 of this Fact Sheet.

aa. **Selenium.** The CTR includes maximum 1-hour average and 4-day average selenium concentrations of 20 µg/L and 5 µg/L, respectively, for the protection of freshwater aquatic life. The Regional Water Board adopted site-specific water quality objectives for selenium in the San Joaquin River from the mouth of the Merced River to Vernalis of 12 µg/L as a maximum concentration and 5 µg/L as a 4-day average for the protection of aquatic life.

The MEC for selenium was 5 µg/L, based on 20 samples collected between October 2006 and April 2008. Selenium was not detected in the upstream receiving water in Harding Drain, based on six samples collected between May 2005 and April 2008. The maximum observed upstream receiving water selenium concentration in the San Joaquin River was 2.6 µg/L, based on six samples collected between May 2005 and April 2008. Therefore, the discharge has a reasonable potential to cause or contribute to an in-stream excursion above the CTR criteria for selenium in Harding Drain and the Basin Plan objective for selenium in the San Joaquin River. An AMEL and MDEL for selenium of 3.7 µg/L and 9.1 µg/L, respectively, are included in this Order for the discharge to Harding Drain through Discharge Point No. 001 based on CTR criteria for the protection of freshwater aquatic life (see Attachment F, Table F-~~22~~ 26 for WQBEL calculations). An AMEL and MDEL for selenium of 3.7 µg/L and 9.1 µg/L, respectively, are included in this Order for the discharge to the San Joaquin River through Discharge Point No. 002 based on Basin Plan objective for the protection of freshwater aquatic life (see Attachment F, Table F-~~23~~ 27 for WQBEL calculations).

Based on the sample results for the effluent, the limitations appear to put the Discharger in immediate non-compliance for discharges to Harding Drain and the San Joaquin River. New or modified control measures may be necessary in order to comply with the effluent limitations, and the new or modified control measures cannot be designed, installed and put into operation within 30 calendar days. Furthermore, the effluent limitations for selenium are a new regulatory requirement within this permit, which becomes applicable to the waste discharge with the adoption of this Order, which was adopted after 1 July 2000. Therefore, a compliance time schedule for compliance with the selenium effluent limitations is established in TSO No. R5-2009-XXXX in accordance with CWC section 13300, that requires preparation and implementation of a pollution prevention plan in compliance with CWC section 13263.3.

bb. **Settleable Solids.** Order No. 5-01-122 included numeric monthly average and daily maximum effluent limitations of 0.1 mL/L and 0.2 mL/L, respectively. Settleable solids have not been detected in the effluent based on recent monitoring data conducted between October 2006 through April 2008. Therefore, monitoring data for settleable solids indicates that there is no reasonable potential to exceed water quality objectives. Therefore, as described in section IV.D.3, settleable solids effluent limitations have not been retained in this Order.

cc. **Silver.** The CTR includes hardness dependent criteria for the protection of freshwater aquatic life for silver. As discussed in section IV.C.2.~~c~~ b of this Fact Sheet, receiving water hardness data is not available for Harding Drain. Therefore, to determine reasonable potential for silver in discharges to Harding Drain, aquatic life criteria were developed using the default conversion factors and a hardness ~~the lowest observed hardness of the effluent~~ of 89 mg/L (as $CaCO_3$). The applicable acute (1-hour average) criterion is 3.3 µg/L. The MEC

for silver was 2.6 µg/L (as total recoverable), which does not exceed the applicable water quality criteria for silver. Silver was not detected in the upstream receiving water in Harding Drain, based on six samples collected between May 2005 and April 2008. Therefore, silver in the discharge to Harding Drain does not exhibit reasonable potential to cause or contribute to an exceedance of water quality criteria.

Reasonable potential to exceed the hardness-dependent criteria for silver in the San Joaquin River was determined using the default conversion factors and the reasonable worst-case downstream receiving water hardness and the maximum effluent silver concentration.~~lowest observed hardness of the effluent of 89 mg/L (as $CaCO_3$) and receiving water of 32 mg/L~~. ~~Therefore~~As discussed in Section IV.C.2.b, the applicable CTR acute (1-hour average) criterion for silver for the discharge to the San Joaquin River is 2.3 µg/L, as total recoverable, and was determined as shown for Concave Up Metals. The MEC for silver was 2.6 µg/L (as total recoverable) exceeds the applicable water quality criteria for silver . Silver was not detected in the upstream receiving water in the San Joaquin River, based on six samples collected between May 2005 and April 2008. Therefore, silver in the future discharge to the San Joaquin River has a reasonable potential to cause or contribute to an in-stream excursion above the CTR criterion for the protection of freshwater aquatic life.

~~The $ECA_{acute}$ was determined assuming no assimilative capacity in the San Joaquin River, the minimum observed upstream receiving water hardness of 32 µg/L, and the effluent at the minimum observed hardness. This results in an~~ Using the procedures for Concave Up Metals as discussed in Section IV.C.2.b, the $ECA_{acute}$ for silver ~~of~~ is 2.3 µg/L. Using the procedures for calculating WQBELs in section 1.4 of the SIP, ~~This Order contains a final~~an AMEL and MDEL for silver of 1.2 µg/L and 2.3 µg/L, respectively, ~~as shown in Table F-24 of this Fact Sheet,~~are included in this Order based on the CTR criterion for the protection of freshwater aquatic life for discharges to the San Joaquin River (see Attachment F, Table F-28 for WQBEL calculations).

Based on the sample results for the effluent, the limitations appear to put the Discharger in immediate non-compliance for discharges to the San Joaquin River. New or modified control measures may be necessary in order to comply with the effluent limitations. Furthermore, the effluent limitations for silver are a new regulatory requirement within this permit, which becomes applicable to the waste discharge with the adoption of this Order, which was adopted after 1 July 2000. Therefore, a compliance time schedule for compliance with the silver effluent limitations is established in TSO No. R5-2009-XXXX in accordance with CWC section 13300, that requires preparation and implementation of a pollution prevention plan in compliance with CWC section 13263.3.

dd. **Toxicity.** See Section IV.C.5. of the Fact Sheet regarding whole effluent toxicity.

### 4. WQBEL Calculations

a. As discussed in section IV.C.3. above, WQBELs for chlorine residual and pH were based on Basin Plan objectives and applied directly as effluent limitations. Because the San Joaquin River is on the 303(d) list for boron and has reasonable potential to cause or contribute to an excursion above the Basin Plan's site-specific objectives, WQBELs for boron at Discharge Point No. 002 were based on Basin Plan objectives and applied directly as effluent limitations. WQBELs for pathogens were based on California DPH reclamation criteria. Based on input from DPH, the WQBELs for aluminum, iron (discharge to the San Joaquin River only), and manganese (discharge to the San Joaquin River only) are based on the Secondary MCL and established directly as annual average effluent limitations. The WQBEL for nitrate was based on the Primary MCL and established directly as an AMEL. Final WQBELs for salinity are based on the waste load allocations established in the Basin Plan Amendment for the Control of Salt and Boron Discharges into the Lower San Joaquin River.

b. Effluent limitations for aluminum, ammonia, carbon tetrachloride, chloride, chlorodibromomethane, copper, dichlorobromomethane, lead (discharge to the San Joaquin River only), selenium, and silver (discharge to the San Joaquin River only) were calculated in accordance with section 1.4 of the SIP. The following paragraphs describe the methodology used for calculating effluent limitations.

c. **Effluent Limitation Calculations.** In calculating maximum effluent limitations, the effluent concentration allowances were set equal to the criteria/standards/objectives.

$$ECA_{acute} = CMC \qquad ECA_{chronic} = CCC$$

For the human health, agriculture, or other long-term criterion/objective, a dilution credit can be applied. The ECA is calculated as follows:

$$ECA_{HH} = HH + D(HH - B)$$

where:

$ECA_{acute}$ = effluent concentration allowance for acute (1-hour average) toxicity criterion

$ECA_{chronic}$ = effluent concentration allowance for chronic (4-day average) toxicity criterion

$ECA_{HH}$ = effluent concentration allowance for human health, agriculture, or other long-term criterion/objective

CMC = criteria maximum concentration (1-hour average)

CCC = criteria continuous concentration (4-day average, unless otherwise noted)

HH = human health, agriculture, or other long-term criterion/objective

D = dilution credit

B = maximum receiving water concentration

Acute and chronic toxicity ECAs were then converted to equivalent long-term averages (LTA) using statistical multipliers and the lowest is used. Additional statistical multipliers were then used to calculate the maximum daily effluent limitation (MDEL) and the average monthly effluent limitation (AMEL).

Human health ECAs are set equal to the AMEL and a statistical multiplier is used to calculate the MDEL.

$$AMEL = mult_{AMEL}\left[\min\left(\overbrace{M_A ECA_{acute}}^{LTA_{acute}}, M_C ECA_{chronic}\right)\right]$$

$$MDEL = mult_{MDEL}\left[\min\left(M_A ECA_{acute}, \underbrace{M_C ECA_{chronic}}_{LTA_{chronic}}\right)\right]$$

$$MDEL_{HH} = \left(\frac{mult_{MDEL}}{mult_{AMEL}}\right) AMEL_{HH}$$

where: $mult_{AMEL}$ = statistical multiplier converting minimum LTA to AMEL
$mult_{MDEL}$ = statistical multiplier converting minimum LTA to MDEL
$M_A$ = statistical multiplier converting CMC to LTA
$M_C$ = statistical multiplier converting CCC to LTA

WQBELs were calculated for aluminum, ammonia, carbon tetrachloride, chloride, chlorodibromomethane, copper, dichlorobromomethane, lead, ~~and~~ selenium, and silver as follows in Tables F-14~~0~~ through F-~~24~~28, below.

**Table F-14~~0~~. WQBEL Calculations for Aluminum at Discharge Point No. 002**

| | Acute |
|---|---|
| Criteria (µg/L) [1] | 750 |
| Dilution Credit | No Dilution |
| ECA | 750 |
| ECA Multiplier | 0.15 |
| LTA | 109 |
| AMEL Multiplier (95th%) | 2.39 |
| **AMEL** (µg/L) | **261** |
| MDEL Multiplier (99th%) | 6.86 |
| **MDEL** (µg/L) | **750** |

1 USEPA Ambient Water Quality Criteria
2 Limitations based on chronic LTA (Chronic LTA < Acute LTA)

**Table F-15~~1~~. WQBEL Calculations for Ammonia at Discharge Point No. 001**

| | Acute | Chronic (4-day) | Chronic (30-day) |
|---|---|---|---|
| Criteria (mg/L)[1] | 2.14 | 6.68 | 2.67 |
| Dilution Credit | No Dilution | No Dilution | No Dilution |
| ECA | 2.14 | 3.95 | 2.67 |
| ECA Multiplier | 0.32 | 0.53 | 0.78 |
| LTA[2] | 0.68 | 3.54 | 2.08 |
| AMEL Multiplier (95th%) | 1.55 | [3] | [3] |
| **AMEL** (mg/L) | **1.1** | [3] | [3] |
| MDEL Multiplier (99th%) | 3.11 | [3] | [3] |
| **MDEL** (mg/L) | **2.1** | [3] | [3] |

[1] USEPA Ambient Water Quality Criteria.
[2] LTA developed based on Acute and Chronic ECA Multipliers calculated at 99th percentile level per sections 5.4.1 and 5.5.4 of TSD.
[3] Limitations based on acute LTA ($LTA_{acute} < LTA_{chronic(4\text{-}day)}$ and $LTA_{acute} < LTA_{chronic(30\text{-}day)}$).

**Table F-16~~2~~. WQBEL Calculations for Ammonia at Discharge Point No. 002**

| | Acute | Chronic (4-day) | Chronic (30-day) |
|---|---|---|---|
| Criteria (mg/L)[1] | 2.14 | 9.2 | 3.68 |
| Dilution Credit | No Dilution | No Dilution | No Dilution |
| ECA | 2.14 | 9.2 | 3.68 |
| ECA Multiplier | 0.32 | 0.53 | 0.78 |
| LTA[2] | 0.68 | 4.88 | 2.87 |
| AMEL Multiplier (95th%) | 1.55 | [3] | [3] |
| **AMEL** (mg/L) | **1.1** | [3] | [3] |
| MDEL Multiplier (99th%) | 3.11 | [3] | [3] |
| **MDEL** (mg/L) | **2.1** | [3] | [3] |

[1] USEPA Ambient Water Quality Criteria.
[2] LTA developed based on Acute and Chronic ECA Multipliers calculated at 99th percentile level per sections 5.4.1 and 5.5.4 of TSD.
[3] Limitations based on acute LTA ($LTA_{acute} < LTA_{chronic(4\text{-}day)}$ and $LTA_{acute} < LTA_{chronic(30\text{-}day)}$).

**Table F-17~~3~~. WQBEL Calculations for Carbon Tetrachloride at Discharge Point No. 001**

| | Human Health |
|---|---|
| Criteria (µg/L) | 0.25 |
| Dilution Credit | No Dilution |
| ECA | 0.25 |
| **AMEL** (µg/L)[1] | **0.25** |
| MDEL/AMEL Multiplier[2] | 2.87 |
| **MDEL** (µg/L) | **0.72** |

[1] AMEL = ECA per section 1.4.B, Step 6 of SIP
[2] Assumes sampling frequency n<=4. Uses MDEL/AMEL multiplier from Table 2 of SIP.

**Table F-184. WQBEL Calculations for Carbon Tetrachloride at Discharge Point No. 002**

| | Human Health |
|---|---|
| Criteria (µg/L) | 0.25 |
| Dilution Credit | ~~20:1~~19.9 |
| ECA | 4.~~1~~2 |
| **AMEL** (µg/L)[1] | **4.~~1~~2** |
| MDEL/AMEL Multiplier[2] | 2.87 |
| **MDEL** (µg/L) | **12** |

1 AMEL = ECA per section 1.4.B, Step 6 of SIP
2 Assumes sampling frequency n<=4. Uses MDEL/AMEL multiplier from Table 2 of SIP.

**Table F-195. WQBEL Calculations for Chloride at Discharge Point No. 002**

| | Acute | Chronic |
|---|---|---|
| Criteria (mg/L) (1) | 860 | 230 |
| Dilution Credit | No Dilution | No Dilution |
| ECA (2) | 860 | 230 |
| ECA Multiplier (3) | 0.47 | 0.67 |
| LTA | 404 | 154 |
| AMEL Multiplier (95th%) (4)(5) | (7) | 1.32 |
| **AMEL** (mg/L) | (7) | **203** |
| MDEL Multiplier (99th%) (6) | (7) | 2.13 |
| **MDEL** (mg/L) | (7) | **328** |

1 CTR aquatic life criteria, based on a hardness of 89 mg/L as $CaCO_3$.
2 ECA calculated per section 1.4.B, Step 2 of SIP.
3 Acute and Chronic ECA Multiplier calculated at 99th percentile per section 1.4.B, Step 3 of SIP or per sections 5.4.1 and 5.5.4 of the TSD.
4 Assumes sampling frequency n<=4.
5 The probability basis for AMEL is 95th percentile per section 1.4.B, Step 5 of SIP or section 5.5.4 of the TSD.
6 The probability basis for MDEL is 99th percentile per section 1.4.B, Step 5 of SIP or section 5.5.4 of the TSD.
7 Limitations based on chronic LTA (Chronic LTA < Acute LTA).

**Table F-2016. WQBEL Calculations for Chlorodibromomethane at Discharge Point No. 001**

| | Human Health |
|---|---|
| Criteria (µg/L) | 0.41 |
| Dilution Credit | No Dilution |
| ECA | 0.41 |
| **AMEL** (µg/L)[1] | **0.41** |
| MDEL/AMEL Multiplier[2] | 1.91 |
| **MDEL** (µg/L) | **0.78** |

1 AMEL = ECA per section 1.4.B, Step 6 of SIP
2 Assumes sampling frequency n<=4. Uses MDEL/AMEL multiplier from Table 2 of SIP.

**Table F-21~~17~~. WQBEL Calculations for Chlorodibromomethane at Discharge Point No. 002**

| | Human Health |
|---|---|
| Criteria (µg/L) | 0.41 |
| Dilution Credit | ~~20:1~~19.9 |
| ECA | ~~7.3~~7.6 |
| **AMEL** (µg/L)[1] | **~~7.3~~7.6** |
| MDEL/AMEL Multiplier[2] | 1.91 |
| **MDEL** (µg/L) | **14** |

1 AMEL = ECA per section 1.4.B, Step 6 of SIP
2 Assumes sampling frequency n<=4. Uses MDEL/AMEL multiplier from Table 2 of SIP.

**Table F-22~~18~~. WQBEL Calculations for Copper at Discharge Point Nos. 001 and 002**

| | Acute | Chronic |
|---|---|---|
| Criteria, total recoverable (µg/L) (1) | 12 | 15 |
| Dilution Credit | No Dilution | No Dilution |
| ECA, total recoverable (2) | 12 | 15 |
| ECA Multiplier (3) | 0.45 | 0.65 |
| LTA | 6.59 | 8.00 |
| AMEL Multiplier (95th%) (4)(5) | 1.35 | (7) |
| **AMEL** (µg/L) | **8.9** | (7) |
| MDEL Multiplier (99th%) (6) | 2.23 | (7) |
| **MDEL** (µg/L) | **15** | (7) |

1 CTR aquatic life criteria, based on a hardness of 89 mg/L as $CaCO_3$. The criteria ~~is~~ are based on application of a site-specific metals translator.
2 ECA calculated per section 1.4.B, Step 2 of SIP.
3 Acute and Chronic ECA Multiplier calculated at 99th percentile per section 1.4.B, Step 3 of SIP or per sections 5.4.1 and 5.5.4 of the TSD.
4 Assumes sampling frequency n<=4.
5 The probability basis for AMEL is 95th percentile per section 1.4.B, Step 5 of SIP or section 5.5.4 of the TSD.
6 The probability basis for MDEL is 99th percentile per section 1.4.B, Step 5 of SIP or section 5.5.4 of the TSD.
7 Limitations based on acute LTA (Acute LTA < Chronic LTA).

**Table F-23~~19~~. WQBEL Calculations for Dichlorobromomethane at Discharge Point No. 001**

| | Human Health |
|---|---|
| Criteria (µg/L) | 0.56 |
| Dilution Credit | No Dilution |
| ECA | 0.56 |
| **AMEL** (µg/L)[1] | **0.56** |
| MDEL/AMEL Multiplier[2] | 1.45 |
| **MDEL** (µg/L) | **0.81** |

1 AMEL = ECA per section 1.4.B, Step 6 of SIP
2 Assumes sampling frequency n<=4. Uses MDEL/AMEL multiplier from Table 2 of SIP.

**Table F-24~~0~~. WQBEL Calculations for Dichlorobromomethane at Discharge Point No. 002**

| | Human Health |
|---|---|
| Criteria (µg/L) | 0.56 |
| Dilution Credit | ~~20:1~~19.9 |
| ECA | ~~10.3~~11 |
| **AMEL** (µg/L)[1] | **~~10~~11** |
| MDEL/AMEL Multiplier[2] | 1.45 |
| **MDEL** (µg/L) | **~~15~~16** |

1 AMEL = ECA per section 1.4.B, Step 6 of SIP
2 Assumes sampling frequency n<=4. Uses MDEL/AMEL multiplier from Table 2 of SIP.

**Table F-25~~1~~. WQBEL Calculations for Lead at Discharge Point No. 002**

| | Acute | Chronic |
|---|---|---|
| Criteria, total recoverable (µg/L) (1) | 55 | 2.9 |
| Dilution Credit | No Dilution | No Dilution |
| ECA, total recoverable (2) | 55 | 2.9 |
| ECA Multiplier (3) | 0.53 | 0.72 |
| LTA | 29 | 2.1 |
| AMEL Multiplier (95th%) (4)(5) | (7) | 1.26 |
| **AMEL** (µg/L) | (7) | **2.6** |
| MDEL Multiplier (99th%) (6) | (7) | 1.88 |
| **MDEL** (µg/L) | (7) | **3.9** |

1 CTR aquatic life criteria, based on ~~a~~the reasonable worst-case downstream receiving water~~n effluent~~ hardness ~~of 89 mg/L (as $CaCO_3$) and lowest observed upstream hardness of 32 mg/L (as $CaCO_3$)~~(see Section IV.C.2.b). The criteria are based on application of a site-specific metals translator.
2 ECA calculated per section 1.4.B, Step 2 of SIP.
3 Acute and Chronic ECA Multiplier calculated at 99th percentile per section 1.4.B, Step 3 of SIP or per sections 5.4.1 and 5.5.4 of the TSD.
4 Assumes sampling frequency n<=4.
5 The probability basis for AMEL is 95th percentile per section 1.4.B, Step 5 of SIP or section 5.5.4 of the TSD.
6 The probability basis for MDEL is 99th percentile per section 1.4.B, Step 5 of SIP or section 5.5.4 of the TSD.
7 Limitations based on chronic LTA (Acute LTA > Chronic LTA).

**Table F-262. WQBEL Calculations for Selenium at Discharge Point No. 001**

| | Acute | Chronic |
|---|---|---|
| Criteria, total recoverable (µg/L) [1] | 20 | 5 |
| Dilution Credit | No Dilution | No Dilution |
| ECA, total recoverable [2] | 20 | 5 |
| ECA Multiplier [3] | 0.22 | 0.39 |
| LTA | 4.32 | 1.96 |
| AMEL Multiplier (95th%) [4][5] | [7] | 1.89 |
| **AMEL** (µg/L) | [7] | **3.7** |
| MDEL Multiplier (99th%) [6] | [7] | 4.63 |
| **MDEL** (µg/L) | [7] | **9.1** |

1 CTR aquatic life criteria.
2 ECA calculated per section 1.4.B, Step 2 of SIP.
3 Acute and Chronic ECA Multiplier calculated at 99th percentile per section 1.4.B, Step 3 of SIP or per sections 5.4.1 and 5.5.4 of the TSD.
4 Assumes sampling frequency n<=4.
5 The probability basis for AMEL is 95th percentile per section 1.4.B, Step 5 of SIP or section 5.5.4 of the TSD.
6 The probability basis for MDEL is 99th percentile per section 1.4.B, Step 5 of SIP or section 5.5.4 of the TSD.
7 Limitations based on chronic LTA (Chronic LTA < Acute LTA).

**Table F-273. WQBEL Calculations for Selenium at Discharge Point No. 002**

| | Acute | Chronic |
|---|---|---|
| Criteria, total recoverable (µg/L) [1] | 12 | 5 |
| Dilution Credit | No Dilution | No Dilution |
| ECA, total recoverable [2] | 12 | 5 |
| ECA Multiplier [3] | 0.22 | 0.39 |
| LTA | 2.59 | 1.96 |
| AMEL Multiplier (95th%) [4][5] | [7] | 1.89 |
| **AMEL** (µg/L) | [7] | **3.7** |
| MDEL Multiplier (99th%) [6] | [7] | 4.63 |
| **MDEL** (µg/L) | [7] | **9.1** |

1 Basin Plan site-specific water quality objectives for the San Joaquin River from the mouth of the Merced River to Vernalis.
2 ECA calculated per section 1.4.B, Step 2 of SIP.
3 Acute and Chronic ECA Multiplier calculated at 99th percentile per section 1.4.B, Step 3 of SIP or per sections 5.4.1 and 5.5.4 of the TSD.
4 Assumes sampling frequency n<=4.
5 The probability basis for AMEL is 95th percentile per section 1.4.B, Step 5 of SIP or section 5.5.4 of the TSD.
6 The probability basis for MDEL is 99th percentile per section 1.4.B, Step 5 of SIP or section 5.5.4 of the TSD.
7 Limitations based on chronic LTA (Chronic LTA < Acute LTA).

### Table F-284. WQBEL Calculations for Silver at Discharge Point No. 002

| | Acute |
|---|---|
| Criteria, total recoverable (µg/L) [1] | 2.3 |
| Dilution Credit | No Dilution |
| ECA, total recoverable [2] | 2.3 |
| ECA Multiplier [3] | 0.32 |
| LTA | 0.74 |
| AMEL Multiplier (95th%) [4][5] | 1.55 |
| **AMEL** (µg/L) | **1.2** |
| MDEL Multiplier (99th%) [6] | 3.11 |
| **MDEL** (µg/L) | **2.3** |

1 CTR aquatic life criteria are~~,~~ based on the reasonable worst-case downstream receiving water ~~an effluent~~ hardness (see Section IV.C.2.b)~~of 89 mg/L (as $CaCO_3$) and lowest observed upstream hardness of 32 mg/L (as $CaCO_3$)~~.

2 ECA calculated per section 1.4.B, Step 2 of SIP.

3 Acute and Chronic ECA Multiplier calculated at 99th percentile per section 1.4.B, Step 3 of SIP or per sections 5.4.1 and 5.5.4 of the TSD.

4 Assumes sampling frequency n<=4.

5 The probability basis for AMEL is 95th percentile per section 1.4.B, Step 5 of SIP or section 5.5.4 of the TSD.

6 The probability basis for MDEL is 99th percentile per section 1.4.B, Step 5 of SIP or section 5.5.4 of the TSD.

## Summary of Water Quality-based Effluent Limitations Discharge Point Nos. 001 and 002

### Table F-295. Summary of Water Quality-based Effluent Limitations for Discharge Point No. 001 (Harding Drain)

| Parameter | Units | Effluent Limitations | | | | |
|---|---|---|---|---|---|---|
| | | Average Monthly | Average Weekly | Maximum Daily | Instantaneous Minimum | Instantaneous Maximum |
| ***Conventional Pollutants*** | | | | | | |
| pH | standard units | -- | -- | -- | 6.5 | 8.5 |
| ***Priority Pollutants*** | | | | | | |
| Copper, Total Recoverable | µg/L | 8.9 | -- | 15 | -- | -- |
| Selenium, Total Recoverable | µg/L | 3.7 | -- | 9.1 | -- | -- |
| | lbs/day[7] | 0.62 | -- | 1.52 | -- | -- |
| Carbon Tetrachloride | µg/L | 0.25 | -- | 0.72 | -- | -- |
| Chlorodibromomethane | µg/L | 0.41 | -- | 0.78 | -- | -- |
| Dichlorobromomethane | µg/L | 0.56 | -- | 0.81 | -- | -- |
| ***Non-Conventional Pollutants*** | | | | | | |
| Aluminum, Total Recoverable | µg/L | -- | 200[1] | -- | -- | -- |
| Ammonia Nitrogen, Total (as N) | mg/L | 1.1 | -- | 2.1 | -- | -- |
| | lbs/day[7] | 183 | -- | 350 | -- | -- |
| Chlorine, Total Residual | mg/L | -- | 0.011[2] | 0.019[3] | -- | -- |

| Parameter | Units | Effluent Limitations | | | | |
|---|---|---|---|---|---|---|
| | | Average Monthly | Average Weekly | Maximum Daily | Instantaneous Minimum | Instantaneous Maximum |
| Electrical Conductivity @ 25°C | µmhos/cm | 1,000/700[4] | -- | -- | -- | -- |
| Nitrate Nitrogen, Total (as N) | mg/L | 10 | -- | -- | -- | -- |
| Total Coliform Organisms | MPN/100 mL | -- | 2.2[5] | 23[6] | -- | 240 |

[1] Applied as an annual average effluent limitation.
[2] Applied as a 4-day average effluent limitation.
[3] Applied as a 1-hour average effluent limitation.
[4] The discharge of electrical conductivity shall not exceed the following:
i. From 1 September through 31 March, the effluent electrical conductivity @ 25°C shall not exceed 1,000 µmhos/cm as a monthly average.
ii. From 1 April through 31 August, the effluent electrical conductivity @ 25°C shall not exceed 700 µmhos/cm as a monthly average.

Compliance with the final effluent limitations for electrical conductivity is not required in this Order until ~~1 January 2016. The Discharger is initially granted 8 years to achieve compliance with final electrical conductivity effluent limitations. Progress towards compliance with final limitations shall be reviewed with each Permit renewal, and additional time may be granted up to the maximum time allowed by the TMDL. The TMDL does not require compliance until~~ 28 July 2022 for all water year types, except critically dry. For critically dry years, full compliance is not required until 28 July 2026.

[5] Applied as a 7-day median effluent limitation.
[6] Effluent total coliform organisms are not to exceed 23 MPN/100 mL more than once in any 30-day period.
[7] Based on a design flow of 20 MGD.

## Table F-30~~26~~. Summary of Water Quality-based Effluent Limitations for Discharge Point No. 002 (San Joaquin River)

| Parameter | Units | Effluent Limitations | | | | |
|---|---|---|---|---|---|---|
| | | Average Monthly | Average Weekly | Maximum Daily | Instantaneous Minimum | Instantaneous Maximum |
| ***Conventional Pollutants*** | | | | | | |
| pH | standard units | -- | -- | -- | 6.5 | 8.5 |
| ***Priority Pollutants*** | | | | | | |
| Copper, Total Recoverable | µg/L | 8.9 | -- | 15 | -- | -- |
| Lead, Total Recoverable | µg/L | 2.6 | -- | 3.9 | -- | -- |
| Selenium, Total Recoverable | µg/L | 3.7 | -- | 9.1 | -- | -- |
| | lbs/day[9] | 0.62 | -- | 1.52 | -- | -- |
| Silver, Total Recoverable | µg/L | 1.2 | -- | 2.3 | -- | -- |
| Carbon Tetrachloride | µg/L | ~~4.1~~4.2 | -- | 12 | -- | -- |
| Chlorodibromomethane | µg/L | ~~7.3~~7.6 | -- | 14 | -- | -- |
| Dichlorobromomethane | µg/L | ~~10~~11 | -- | ~~15~~16 | -- | -- |
| ***Non-Conventional Pollutants*** | | | | | | |
| Aluminum, Total Recoverable | µg/L | 261 | 200[1] | 750 | -- | -- |

| Parameter | Units | Effluent Limitations | | | | |
|---|---|---|---|---|---|---|
| | | Average Monthly | Average Weekly | Maximum Daily | Instantaneous Minimum | Instantaneous Maximum |
| Ammonia Nitrogen, Total (as N) | mg/L | 1.1 | -- | 2.1 | -- | -- |
| | lbs/day[9] | 183 | -- | 350 | -- | -- |
| Boron, Total Recoverable | mg/L | 0.8[2]/1.0[3] | -- | 2.0[2]/2.6[3] | -- | -- |
| Chloride | mg/L | 203 | -- | 328 | -- | -- |
| Chlorine, Total Residual | mg/L | -- | 0.011[4] | 0.019[5] | -- | -- |
| Electrical Conductivity @ 25°C | µmhos/cm | 1,000/700[6] | -- | -- | -- | -- |
| Iron, Total Recoverable | µg/L | 300[1] | -- | -- | -- | -- |
| Manganese, Total Recoverable | µg/L | 50[1] | -- | -- | -- | -- |
| Nitrate Nitrogen, Total (as N) | mg/L | ~~26~~31 | -- | -- | -- | -- |
| Total Coliform Organisms | MPN/100 mL | -- | 2.2[7] | 23[8] | -- | 240 |

[1] Applied as an annual average effluent limitation.
[2] Applies 15 March through 15 September.
[3] Applies 16 September through 14 March.
[4] Applied as a 4-day average effluent limitation.
[5] Applied as a 1-hour average effluent limitation.
[6] The discharge of electrical conductivity shall not exceed the following:
i. From 1 September through 31 March, the effluent electrical conductivity @ 25°C shall not exceed 1,000 µmhos/cm as a monthly average.
ii. From 1 April through 31 August, the effluent electrical conductivity @ 25°C shall not exceed 700 µmhos/cm as a monthly average.

Compliance with the final effluent limitations for electrical conductivity is not required in this Order until ~~1 January 2016. The Discharger is initially granted 6 years to achieve compliance with final electrical conductivity effluent limitations. Progress towards compliance with final limitations shall be reviewed with each Permit renewal, and additional time may be granted up to the maximum time allowed by the TMDL. The TMDL does not require compliance until~~ 28 July 2022 for all water year types, except critically dry. For critically dry years, full compliance is not required until 28 July 2026.

[7] Applied as a 7-day median effluent limitation.
[8] Effluent total coliform organisms are not to exceed 23 MPN/100 mL more than once in any 30-day period.
[9] Based on a design flow of 20 MGD.

### 5. Whole Effluent Toxicity (WET)

For compliance with the Basin Plan's narrative toxicity objective, this Order requires the Discharger to conduct whole effluent toxicity testing for acute and chronic toxicity, as specified in the Monitoring and Reporting Program (Attachment E, Section V.). This Order also contains effluent limitations for acute toxicity and requires the Discharger to implement best management practices to investigate the causes of, and identify corrective actions to reduce or eliminate effluent toxicity.

a. **Acute Aquatic Toxicity.** The Basin Plan contains a narrative toxicity objective that states, "*All waters shall be maintained free of toxic substances in concentrations that produce detrimental physiological responses in human, plant,*

*animal, or aquatic life*." (Basin Plan at III-8.00) The Basin Plan also states that, "…*effluent limits based upon acute biotoxicity tests of effluents will be prescribed where appropriate*…". USEPA Region 9 provided guidance for the development of acute toxicity effluent limitations in the absence of numeric water quality objectives for toxicity in its document titled "Guidance for NPDES Permit Issuance", dated February 1994. In section B.2. "Toxicity Requirements" (pgs. 14-15) it states that, "*In the absence of specific numeric water quality objectives for acute and chronic toxicity, the narrative criterion 'no toxics in toxic amounts' applies. Achievement of the narrative criterion, as applied herein, means that ambient waters shall not demonstrate for acute toxicity: 1) less than 90% survival, 50% of the time, based on the monthly median, or 2) less than 70% survival, 10% of the time, based on any monthly median. For chronic toxicity, ambient waters shall not demonstrate a test result of greater than 1 TUc."* Accordingly, effluent limitations for acute toxicity have been included in this Order as follows:

**Acute Toxicity.** Survival of aquatic organisms in 96-hour bioassays of undiluted waste shall be no less than:

Minimum for any one bioassay-- ---------- 70%
Median for any three or more consecutive bioassays --------- 90%

b. **Chronic Aquatic Toxicity.** The Basin Plan contains a narrative toxicity objective that states, "*All waters shall be maintained free of toxic substances in concentrations that produce detrimental physiological responses in human, plant, animal, or aquatic life*." (Basin Plan at page III-8.00). The following table summarizes test results exceeding 1 chronic toxicity unit (TUc) based on quarterly whole effluent chronic toxicity testing performed by the Discharger from October 2006 through April 2008.

**Table F-31~~27~~. Summary of Chronic Aquatic Toxicity Results**

| Date | Species | Test Endpoint | Result (TUc) |
|---|---|---|---|
| 13 October 2006 | *Ceriodaphnia dubia* | Reproduction | 2 |
| 13 October 2006 | *Selenastrum capricornutum* | Growth | 8 |
| 19 January 2007 | *Selenastrum capricornutum* | Growth | 8 |
| 25 October 2007 | *Ceriodaphnia dubia* | Reproduction | 2 |
| 22 January 2008 | *Pimephales promelas* | Larval Growth | 2 |
| 22 January 2008 | *Selenastrum capricornutum* | Growth | 8 |

Based on the data provided by the Discharger, the discharge has reasonable potential to cause or contribute to an in-stream excursion above of the Basin Plan's narrative toxicity objective. The results of several tests indicate impacts to growth and reproduction.

No dilution has been granted for the chronic condition. Therefore, chronic toxicity testing results exceeding 1 TUc demonstrates the discharge has a reasonable potential to cause or contribute to an exceedance of the Basin Plan's narrative

toxicity objective. Therefore, a narrative effluent limit for chronic whole effluent toxicity has been established in the Order.

Numeric chronic WET effluent limitations have not been included in this Order. The SIP contains implementation gaps regarding the appropriate form and implementation of chronic toxicity limits. This has resulted in the petitioning of a NPDES permit in the Los Angeles Region[1] that contained numeric chronic toxicity effluent limitations. To address the petition, the State Water Board adopted WQO 2003-012 directing its staff to revise the toxicity control provisions in the SIP. The State Water Board states the following in WQO 2003-012, "*In reviewing this petition and receiving comments from numerous interested persons on the propriety of including numeric effluent limitations for chronic toxicity in NPDES permits for publicly-owned treatment works that discharge to inland waters, we have determined that this issue should be considered in a regulatory setting, in order to allow for full public discussion and deliberation. We intend to modify the SIP to specifically address the issue. We anticipate that review will occur within the next year. We therefore decline to make a determination here regarding the propriety of the final numeric effluent limitations for chronic toxicity contained in these permits*." The process to revise the SIP is currently underway. Proposed changes include clarifying the appropriate form of effluent toxicity limits in NPDES permits and general expansion and standardization of toxicity control implementation related to the NPDES permitting process. Since the toxicity control provisions in the SIP are under revision it is infeasible to develop numeric effluent limitations for chronic toxicity. However, the State Water Board found in WQO 2003-012 that, while it is not appropriate to include final numeric effluent limitations for chronic toxicity in NPDES permits for POTWs, permits must contain a narrative effluent limitation, numeric benchmarks for triggering accelerated monitoring, rigorous Toxicity Reduction Evaluation (TRE)/Toxicity Identification Evaluation (TIE) conditions, and a reopener to establish numeric effluent limitations for either chronic toxicity or the chemical(s) causing toxicity. Therefore, this Order includes a narrative effluent limitation for chronic toxicity and requires that the Discharger meet best management practices for compliance with the Basin Plan's narrative toxicity objective, as allowed under 40 CFR 122.44(k). This Order also includes a reopener that allows the Regional Water Board to reopen the permit and include a numeric chronic toxicity limitation, a new acute toxicity limitation, and/or a limitation for a specific toxicant identified in the TRE.

To ensure compliance with the narrative effluent limitation and the Basin Plan's narrative toxicity objective, the Discharger is required to conduct chronic WET testing, as specified in the Monitoring and Reporting Program (Attachment E section V.). Furthermore, the Special Provision contained at VI.C.2.a. of this

[1] In the Matter of the Review of Own Motion of Waste Discharge Requirements Order Nos. R4-2002-0121 [NPDES No. CA0054011] and R4-2002-0123 [NPDES NO. CA0055119] and Time Schedule Order Nos. R4-2002-0122 and R4-2002-0124 for Los Coyotes and Long Beach Wastewater Reclamation Plants Issued by the California Regional Water Quality Control Board, Los Angeles Region SWRCB/OCC FILES A-1496 AND 1496(a).

Order requires the Discharger to investigate the causes of, and identify and implement corrective actions to reduce or eliminate effluent toxicity. If the discharge demonstrates a pattern of toxicity exceeding the numeric toxicity monitoring trigger, the Discharger is required to initiate a Toxicity Reduction Evaluation (TRE) in accordance with an approved TRE workplan. The numeric toxicity monitoring trigger is not an effluent limitation; it is the toxicity threshold at which the Discharger is required to perform accelerated chronic toxicity monitoring, as well as, the threshold to initiate a TRE if a pattern of effluent toxicity has been demonstrated.

## D. Final Effluent Limitations

### 1. Mass-based Effluent Limitations.

Title 40 CFR 122.45(f)(1) requires effluent limitations be expressed in terms of mass, with some exceptions, and 40 CFR 122.45(f)(2) allows pollutants that are limited in terms of mass to additionally be limited in terms of other units of measurement. This Order includes effluent limitations expressed in terms of mass and concentration. In addition, pursuant to the exceptions to mass limitations provided in 40 CFR 122.45(f)(1), some effluent limitations are not expressed in terms of mass, such as pH and temperature, and when the applicable standards are expressed in terms of concentration (e.g., CTR criteria and MCLs) and mass limitations are not necessary to protect the beneficial uses of the receiving water.

Mass-based effluent limitations have been established in this Order for $BOD_5$, TSS, and ammonia because they are oxygen-demanding substances; selenium because it is a bioaccumulative pollutant; and mercury because it is a bioaccumulative pollutant and because the San Joaquin River is listed as impaired due to mercury. Mass-based effluent limitations were calculated based upon the permitted average dry weather flow allowed in Sections IV.A.1.g and IV.B.1.g of the Limitations and Discharge Requirements.

Except for the pollutants listed above, for those pollutant parameters for which effluent limitations are based on water quality objectives and criteria that are concentration-based, mass-based effluent limitations are not included in this Order.

### 2. Averaging Periods for Effluent Limitations.

Title 40 CFR 122.45 (d) requires average weekly and average monthly discharge limitations for publicly owned treatment works (POTWs) unless impracticable. However, for toxic pollutants and pollutant parameters in water quality permitting, the USEPA recommends the use of a maximum daily effluent limitation in lieu of average weekly effluent limitations for two reasons. "*First, the basis for the 7-day average for POTWs derives from the secondary treatment requirements. This basis is not related to the need for assuring achievement of water quality standards. Second, a 7-day average, which could comprise up to seven or more daily samples, could average out peak toxic concentrations and therefore the discharge's potential for causing acute toxic effects would be missed.*" (TSD, pg. 96) This Order utilizes

maximum daily effluent limitations in lieu of average weekly effluent limitations for carbon tetrachloride, chlorodibromomethane, copper, dichlorobromomethane, electrical conductivity, lead, selenium, and silver as recommended by the TSD for the achievement of water quality standards and for the protection of the beneficial uses of the receiving stream. Based on a conversation between the Regional Water Board and the California DPH, annual average limitations are more appropriate for some pollutants whose effluent limitations are based on primary and secondary MCLs. Therefore, annual average limitations have been applied for aluminum, iron, and manganese. DPH also recommends that an AMEL is more appropriate for pollutants such as nitrate for which the MCL is designed to be protective of acute health effects. Therefore, an AMEL has been applied for nitrate. Furthermore, for boron, chlorine residual, $BOD_5$, TSS, pH, and total coliform organisms, weekly average effluent limitations have been replaced or supplemented with effluent limitations utilizing shorter averaging periods. The rationale for using shorter averaging periods for these constituents is discussed in Attachment F, Section IV.C.3, above.

**3. Satisfaction of Anti-Backsliding Requirements.**

The Clean Water Act specifies that a revised permit may not include effluent limitations that are less stringent than the previous permit unless a less stringent limitation is justified based on exceptions to the anti-backsliding provisions contained in Clean Water Act sections 402(o) or 303(d)(4), or, where applicable, 40 CFR 122.44(l).

Order No. 5-01-122 included effluent limitations for a number of parameters. However, in WQO 2002-0016, the State Water Board stayed the final effluent limitations for aluminum, copper, cyanide, zinc, bromodichloromethane, molybdenum, tributyltin, iron, ammonia, and manganese. Based on monitoring data collected during the term of Order No. 5-01-122, the discharge does not indicate reasonable potential to exceed water quality objectives for iron (Discharge Point No. 001), manganese (Discharge Point No. 001), molybdenum, cyanide, zinc, or tributyltin. Therefore, effluent limitations for these parameters were not included in this Order. Because the effluent limitations for iron (Discharge Point No. 001), manganese (Discharge Point No. 001), molybdenum, cyanide, zinc, or tributyltin were stayed as part of WQO 2002-0016 and recent monitoring data for these constituents does not indicate reasonable potential to exceed water quality objectives, the lack of effluent limitations in this Order does not constitute backsliding.

Order No. 5-01-122 contained effluent limitations for turbidity. The prior limitations were solely an operational check to ensure the filtration system was functioning properly to ensure adequate disinfection. The prior effluent limitations were not intended to regulate turbidity in the receiving water. Rather, turbidity is an operational parameter to determine proper system functioning and not a WQBEL.

This Order contains performance based operational turbidity specifications in lieu of effluent limitations. This Order does not include effluent limitations for turbidity.

However, the performance-based specification in this Order is an equivalent limit that is not less stringent, and therefore does not constitute backsliding.

The proposed revised operational specifications for turbidity are the same as the effluent limitations in Order No. 5-01-122. (See Special Provision VI.C.4.c for turbidity specifications.) These revisions are consistent with state regulations implementing recycled water requirements.

Order No. 5-01-122 established effluent limitations for oil and grease and settleable solids. As discussed further in section IV.C.3, monitoring data over the term of Order No. 5-01-122 indicated that the discharge no longer exhibits reasonable potential to exceed water quality objectives for oil and grease and settleable solids. For oil and grease, concentrations have been reported as below analytical detection levels since November 2007. Settleable solids have not been detected in the effluent based on recent monitoring data conducted between October 2006 through April 2008. Therefore, the effluent limitations are not retained in this Order. The monitoring data submitted by the Discharger is considered new information by the Regional Water Board.

Order No. 5-01-122 established effluent limitations for dissolved oxygen. The dissolved oxygen concentration in the effluent was below the effluent concentration of 7.5 mg/L on 18 June 2007 with a concentration of 7.1 mg/L, however the remaining 578 samples taken between October 2006 and April 2008 were above the effluent limitation of 7.5 mg/L. All effluent samples were above the water quality objective for dissolved oxygen of 7.0 mg/L. Additionally, the downstream receiving water concentration in Harding Drain was below the water quality objective only twice on 1 August 2007 and 26 September 2007 out of 83 samples taken between October 2006 and April 2008. On both occasions, the effluent concentration was above the water quality objective for dissolved oxygen. Therefore, the Regional Water Board finds that the discharge does not exhibit reasonable potential to cause or contribute to an exceedance of the water quality objective for dissolved oxygen. Therefore, this Order does not retain the effluent limitation for dissolved oxygen from Order No. 5-01-122. The monitoring data submitted by the Facility is considered new information by the Regional Water Board.

The revision of the turbidity limitation and the removal of effluent limitations for oil and grease and dissolved oxygen are consistent with the antidegradation provisions of 40 CFR 131.12 and State Water Board Resolution No. 68-16. Any impact on existing water quality will be insignificant.

**4. Satisfaction of Antidegradation Policy**

The Discharger developed a report titled, *Antidegradation Analysis for Harding Drain Bypass Pipeline and Outfall Project, September 2008*, (Larry Walker Associates), that provides a simple antidegradation analysis following the guidance provided by State Water Board APU 90-004. Pursuant to the guidelines, the Report evaluated whether changes in water quality resulting from the relocation of the discharge of

tertiary effluent from Harding Drain to the San Joaquin River are consistent with the maximum benefit to the people of the state, will not unreasonably affect beneficial uses, will not cause water quality to be less than water quality objectives, and that the discharge provides protection for existing in-stream uses and water quality necessary to protect those uses.

According to the study, the tertiary treated wastewater is determined to comprise best practicable treatment or control and is consistent with federal and State antidegradation policies for the following reasons:

- Under the proposed project, the Discharger's tertiary treated effluent will be discharged to the San Joaquin River approximately 560 feet upstream of the Harding Drain outfall. This shift in the discharge location would similarly shift the bounds of the expected mixing zone, but should not cause an increase in the size of the mixing zone. The relocation of the Discharger's discharge to the San Joaquin River from the Harding Drain will produce no change in San Joaquin River water quality downstream in the receiving water where effluent and ambient water are reasonably well-mixed. Concomitantly, there are no anticipated far-field impacts of the proposed project on San Joaquin River or Delta water quality.

- The proposed project is not anticipated to produce measurable effects in San Joaquin River water quality downstream of the Discharger's proposed new discharge location. There will be no change in the concentration or mass of pollutants discharged by the Facility as compared to the baseline or pre-project condition.

- The proposed project will not adversely affect existing or probable beneficial uses of the receiving water, nor will it cause water quality to fall below applicable water quality objectives.

The Regional Water Board concurs with the Antidegradation Analysis provided by the Discharger. The Regional Water Board finds that the permitted surface water discharge is consistent with the antidegradation provisions of 40 CFR 131.12 and State Water Board Resolution No. 68-16. This Order provides for the relocation of the discharge of tertiary effluent from Harding Drain to the San Joaquin River. Currently, the Facility discharges to Harding Drain which then empties into the San Joaquin River. The proposed relocation of the discharge into the San Joaquin River simply moves the point of discharge in the San Joaquin River approximately 560 feet upstream from where Harding Drain empties into the River. Therefore no increased flows or pollutant concentrations/loadings will occur as a result of the discharge relocation. The discharge is a Title 22, or equivalent, tertiary-level treated wastewater, which is a high level of treatment of sewage waste that is considered BPTC for most constituents in the wastewater and will result in attaining water quality standards applicable to the discharge.

## Summary of Final Effluent Limitations
## Discharge Point Nos. 001 and 002

### Table F-322~~8~~. Summary of Final Effluent Limitations for Discharge Point No. 001

| Parameter | Units | Effluent Limitations | | | | | Basis[1] |
|---|---|---|---|---|---|---|---|
| | | Average Monthly | Average Weekly | Maximum Daily | Instantaneous Minimum | Instantaneous Maximum | |
| Average Dry Weather Flow | MGD | 20 | -- | -- | -- | -- | DC |
| ***Conventional Pollutants*** | | | | | | | |
| Biochemical Oxygen Demand, 5-day @ 20°C | mg/L | 10 | 15 | 20 | -- | -- | TTC |
| | lbs/day[2] | 1,668 | 2,502 | 3,336 | -- | -- | |
| | % Removal | 85 | -- | -- | -- | -- | CFR |
| Total Suspended Solids | mg/L | 10 | 15 | 20 | -- | -- | TTC |
| | lbs/day[2] | 1,668 | 2,502 | 3,336 | -- | -- | |
| | % Removal | 85 | -- | -- | -- | -- | CFR |
| pH | standard units | -- | -- | -- | 6.5 | 8.5 | BP |
| ***Priority Pollutants*** | | | | | | | |
| Copper, Total Recoverable | µg/L | 8.9 | -- | 15 | -- | -- | CTR |
| Selenium, Total Recoverable | µg/L | 3.7 | -- | 9.1 | -- | -- | CTR |
| | lbs/day[2] | 0.62 | -- | 1.52 | -- | -- | |
| Carbon Tetrachloride | µg/L | 0.25 | -- | 0.72 | -- | -- | CTR |
| Chlorodibromomethane | µg/L | 0.41 | -- | 0.78 | -- | -- | CTR |
| Dichlorobromomethane | µg/L | 0.56 | -- | 0.81 | -- | -- | CTR |
| ***Non-Conventional Pollutants*** | | | | | | | |
| Acute Toxicity | % Survival | [3] | -- | -- | -- | -- | BP |
| Aluminum, Total Recoverable | µg/L | -- | 200[4] | -- | -- | -- | NAWQC/ SEC MCL |
| Ammonia Nitrogen, Total (as N) | mg/L | 1.1 | -- | 2.1 | -- | -- | NAWQC |
| | lbs/day[2] | 183 | -- | 350 | -- | -- | |
| Chlorine, Total Residual | mg/L | -- | 0.011[5] | 0.019[6] | -- | -- | NAWQC |
| Electrical Conductivity @ 25°C | µmhos/cm | 1,000/700[7] | -- | -- | -- | -- | TMDL |
| Nitrate Nitrogen, Total (as N) | mg/L | 10 | -- | -- | -- | -- | MCL |
| Total Coliform Organisms | MPN/100 mL | -- | 2.2[8] | 23[9] | -- | 240 | Title 22 |

| Parameter | Units | Effluent Limitations | | | | | Basis[1] |
|---|---|---|---|---|---|---|---|
| | | Average Monthly | Average Weekly | Maximum Daily | Instantaneous Minimum | Instantaneous Maximum | |

[1] DC – Based on the design capacity of the Facility.
TTC – Based on tertiary treatment capability. These effluent limitations reflect the capability of a properly operated tertiary treatment plant.
CFR – Based on secondary treatment standards contained in 40 CFR Part 133.
BP – Based on water quality objectives contained in the Basin Plan.
CTR – Based on water quality criteria contained in the California Toxics Rule and applied as specified in the SIP.
NAWQC – Based on USEPA's National Ambient Water Quality Criteria for the protection of freshwater aquatic life.
SEC MCL – Based on the Secondary Maximum Contaminant Level.
TMDL – Based on the TMDL for salinity and boron in the lower San Joaquin River.
MCL – Based on the Primary Maximum Contaminant Level.
Title 22 – Based on CA Department of Public Health Reclamation Criteria, CCR, Division 4, Chapter 3 (Title 22).

[2] Based on a design flow of 20 MGD.

[3] Survival of aquatic organisms in 96-hour bioassays of undiluted waste shall be no less than:
Minimum for any one bioassay----------70%
Median for any three or more consecutive bioassays ------90%

[4] Applied as an annual average effluent limitation.

[5] Applied as a 4-day average effluent limitation.

[6] Applied as a 1-hour average effluent limitation.

[7] The discharge of electrical conductivity shall not exceed the following:

i. From 1 September through 31 March, the effluent electrical conductivity @ 25°C shall not exceed 1,000 µmhos/cm as a monthly average.

ii. From 1 April through 31 August, the effluent electrical conductivity @ 25°C shall not exceed 700 µmhos/cm as a monthly average.

Compliance with the final effluent limitations for electrical conductivity is not required in this Order until ~~1 January 2016. The Discharger is initially granted 8 years to achieve compliance with final electrical conductivity effluent limitations. Progress towards compliance with final limitations shall be reviewed with each Permit renewal, and additional time may be granted up to the maximum time allowed by the TMDL. The TMDL does not require compliance until~~ 28 July 2022 for all water year types, except critically dry. For critically dry years, full compliance is not required until 28 July 2026.

[8] Applied as a 7-day median effluent limitation.

[9] Effluent total coliform organisms are not to exceed 23 MPN/100 mL more than once in any 30-day period.

## Table F-33~~29~~. Summary of Final Effluent Limitations for Discharge Point No. 002

| Parameter | Units | Effluent Limitations | | | | | Basis[1] |
|---|---|---|---|---|---|---|---|
| | | Average Monthly | Average Weekly | Maximum Daily | Instantaneous Minimum | Instantaneous Maximum | |
| Average Dry Weather Flow | MGD | 20 | -- | -- | -- | -- | DC |
| ***Conventional Pollutants*** | | | | | | | |
| Biochemical Oxygen Demand, 5-day @ 20°C | mg/L | 10 | 15 | 20 | -- | -- | TTC |
| | lbs/day[2] | 1,668 | 2,502 | 3,336 | -- | -- | |
| | % Removal | 85 | -- | -- | -- | -- | CFR |
| Total Suspended Solids | mg/L | 10 | 15 | 20 | -- | -- | TTC |
| | lbs/day[2] | 1,668 | 2,502 | 3,336 | -- | -- | |
| | % Removal | 85 | -- | -- | -- | -- | CFR |

| Parameter | Units | Effluent Limitations | | | | | Basis[1] |
|---|---|---|---|---|---|---|---|
| | | Average Monthly | Average Weekly | Maximum Daily | Instantaneous Minimum | Instantaneous Maximum | |
| pH | standard units | -- | -- | -- | 6.5 | 8.5 | BP |
| ***Priority Pollutants*** | | | | | | | |
| Copper, Total Recoverable | µg/L | 8.9 | -- | 15 | -- | -- | CTR |
| Lead, Total Recoverable | µg/L | 2.6 | -- | 3.9 | -- | -- | CTR |
| Selenium, Total Recoverable | µg/L | 3.7 | -- | 9.1 | -- | -- | BP |
| | lbs/day[2] | 0.62 | -- | 1.52 | -- | -- | |
| Silver, Total Recoverable | µg/L | 1.2 | -- | 2.3 | -- | -- | CTR |
| Carbon Tetrachloride | µg/L | ~~4.1~~4.2 | -- | 12 | -- | -- | CTR |
| Chlorodibromomethane | µg/L | ~~7.3~~7.6 | -- | 14 | -- | -- | CTR |
| Dichlorobromomethane | µg/L | ~~10~~11 | -- | ~~15~~16 | -- | -- | CTR |
| ***Non-Conventional Pollutants*** | | | | | | | |
| Acute Toxicity | % Survival | [3] | -- | -- | -- | - | BP |
| Aluminum, Total Recoverable | µg/L | 261 | 200[4] | 750 | -- | -- | NAWQC/ SEC MCL |
| Ammonia Nitrogen, Total (as N) | mg/L | 1.1 | -- | 2.1 | -- | -- | NAWQC |
| | lbs/day[2] | 183 | -- | 350 | -- | -- | NAWQC |
| Boron, Total Recoverable | mg/L | 0.8[5]/1.0[6] | -- | 2.0[5]/2.6[6] | -- | -- | BP |
| Chloride | mg/L | 203 | -- | 328 | -- | -- | NAWQC |
| Chlorine, Total Residual | mg/L | -- | 0.011[7] | 0.019[8] | -- | -- | NAWQC |
| Electrical Conductivity @ 25°C | µmhos/cm | 1,000/700[9] | -- | -- | -- | -- | TMDL |
| Iron, Total Recoverable | µg/L | 300[4] | -- | -- | -- | -- | SEC MCL |
| Manganese, Total Recoverable | µg/L | 50[4] | -- | -- | -- | -- | SEC MCL |
| Nitrate Nitrogen, Total (as N) | mg/L | ~~26~~31 | -- | -- | -- | -- | PER |
| Total Coliform Organisms | MPN/100 mL | -- | 2.2[10] | 23[11] | -- | 240 | Title 22 |

| Parameter | Units | Effluent Limitations | | | | | Basis[1] |
|---|---|---|---|---|---|---|---|
| | | Average Monthly | Average Weekly | Maximum Daily | Instantaneous Minimum | Instantaneous Maximum | |

[1] DC – Based on the design capacity of the Facility.
TTC – Based on tertiary treatment capability. These effluent limitations reflect the capability of a properly operated tertiary treatment plant.
CFR – Based on secondary treatment standards contained in 40 CFR Part 133.
BP – Based on water quality objectives contained in the Basin Plan.
CTR – Based on water quality criteria contained in the California Toxics Rule and applied as specified in the SIP.
NAWQC – Based on USEPA's National Ambient Water Quality Criteria for the protection of freshwater aquatic life.
SEC MCL – Based on the Secondary Maximum Contaminant Level.
TMDL – Based on the TMDL for salinity and boron in the lower San Joaquin River.
MCL – Based on the Primary Maximum Contaminant Level.
Title 22 – Based on CA Department of Public Health Reclamation Criteria, CCR, Division 4, Chapter 3 (Title 22).
PER – Based on the performance of the existing treatment system.

[2] Based on a design flow of 20 MGD.

[3] Survival of aquatic organisms in 96-hour bioassays of undiluted waste shall be no less than:
Minimum for any one bioassay---------- 70%
Median for any three or more consecutive bioassays ---- 90%

[4] Applied as an annual average effluent limitation.

[5] Applies 15 March through 15 September.

[6] Applies 16 September through 14 March.

[7] Applied as a 4-day average effluent limitation.

[8] Applied as a 1-hour average effluent limitation.

[9] The discharge of electrical conductivity shall not exceed the following:

i. From 1 September through 31 March, the effluent electrical conductivity @ 25°C shall not exceed 1,000 µmhos/cm as a monthly average.

ii. From 1 April through 31 August, the effluent electrical conductivity @ 25°C shall not exceed 700 µmhos/cm as a monthly average.

Compliance with the final effluent limitations for electrical conductivity is not required in this Order until ~~1 January 2016. The Discharger is initially granted 8 years to achieve compliance with final electrical conductivity effluent limitations. Progress towards compliance with final limitations shall be reviewed with each Permit renewal, and additional time may be granted up to the maximum time allowed by the TMDL. The TMDL does not require compliance until~~ 28 July 2022 for all water year types, except critically dry. For critically dry years, full compliance is not required until 28 July 2026.

[10] Applied as a 7-day median effluent limitation.

[11] Effluent total coliform organisms are not to exceed 23 MPN/100 mL more than once in any 30-day period.

## E. Interim Effluent Limitations

1. **Mercury.** As discussed in section IV.C.3, this Order contains an interim performance-based mass effluent limitation of 0.82 lbs/year for mercury for the effluent discharged to the receiving water. This limitation is based on maintaining the mercury loading at the current level until a TMDL can be established and USEPA develops mercury standards that are protective of human health. The mass limitation was derived using the maximum observed effluent mercury concentration and the design average daily flow rate of the current treatment plant (20 MGD).

2. **Electrical Conductivity.** As discussed in section IV.C.3, this Order also contains an interim performance-based effluent limitation for electrical conductivity of

979 µmhos/cm applied as an annual average. Less than 3 years of effluent monitoring data is available for electrical conductivity (October 2006 through April 2008). Due to the limited dataset, there is a high probability that an interim limitation based on the maximum observed annual average will not be achievable. Therefore, a probability distribution was fitted to the available monthly data (October 2006 through December 2008) with no consideration of possible seasonal affects, and a recursive "Monte Carlo" model was run for a 100-year period (i.e., 1,200 months). This recursion was performed 10 times to develop an estimate of average annual averages for the 10 recursions. The average was 914 µmhos/cm with a standard deviation of 19.6 µmhos/cm, and an average maximum of 967 µmhos/cm. Sampling and laboratory variability was accounted for by establishing an interim limitation that is based on normally distributed data where 99.9% of the data points will lie within 3.3 standard deviations of the mean (*Basic Statistical Methods for Engineers and Scientists, Kennedy and Neville, Harper and Row*). Therefore, an interim limitation of 979 µmhos/cm is established in this Order based on the mean plus 3.3 standard deviations of the available data.

## F. Land Discharge Specifications

**[NOT APPLICABLE]**

## G. Reclamation Specifications

The 2004 tentative renewal Order stated that up to 7.9 MGD of the treated wastewater may be discharged to the Bar-Vee Dairy for irrigation of pasture. The discharge of wastewater at the Bar-Vee Dairy to irrigate silage and fodder crops using recycled water from the Facility was regulated under Water Reclamation Requirements Order No. 92-021, and subsequently Order No. R5-2002-0061 which was adopted on 26 April 2002. By letter dated 10 December 2007, the Discharger reported that they would not be renewing the WDRs for Bar-Vee Dairy. The Regional Water Board rescinded Order No. R5-2002-0061 on 25 April 2008. This Order does not include reclamation specifications for irrigation.

The Discharger indicated in a letter dated 21 November 2008~~, the Discharger indicated~~ that they are currently providing 2.0 MGD of recycled water for cooling purposes to the Walnut Energy Center, a 250 Megawatt power plant owned and operated by the Turlock Irrigation District under a long-term agreement. The Discharger also provides recycled water to the Pedretti Sports Complex for irrigation purposes. The Discharger submitted a Title 22 Engineering Report to DPH in September 2006 to provide tertiary treated recycled water to the Walnut Energy Center and the Pedretti Sports Complex. DPH approved the Title 22 Engineering Report on 7 November 2006. Treated municipal wastewater discharged for reclamation usage must meet the requirements of CCRs, Title 22. Therefore, this Order contains the following reclamation specifications for the reclamation discharge at Discharge Point Nos. 003 and 004 requiring compliance with Title 22, Division 4, Chapter 3, Water Recycling Criteria.

1. **Reclamation Specification 1 through 3.** These specifications are based on Title 22, Division 4, Section 60301 et. seq.

2 **Reclamation Specification 4.** This specification is based on Title 22, Sections 6020l.230 and 60304 (Disinfected Tertiary Recycled Water).

~~The Discharger also indicated in the 21 November 2008 that infrastructure (purple pipe) has been laid in a number of newer developments and park space for future use of recycled water on landscape and possible dual plumbed water systems. The Discharger also anticipates the use of recycled water for landscape purposes at their 20-acre Sports Complex. These projects are not authorized in this Order and must be covered by a Master Reclamation Permit or under the State Water Board Order WQO 2009-0006-DWQ, General Waste Discharge Requirements for Landscape Irrigation Uses of Municipal Recycled Water.~~

## V. RATIONALE FOR RECEIVING WATER LIMITATIONS

Basin Plan water quality objectives to protect the beneficial uses of surface water and groundwater include numeric objectives and narrative objectives, including objectives for chemical constituents, toxicity, and tastes and odors. The toxicity objective requires that surface water and groundwater be maintained free of toxic substances in concentrations that produce detrimental physiological responses in humans, plants, animals, or aquatic life. The chemical constituent objective requires that surface water and groundwater shall not contain chemical constituents in concentrations that adversely affect any beneficial use or that exceed the maximum contaminant levels (MCLs) in Title 22, CCR. The tastes and odors objective states that surface water and groundwater shall not contain taste- or odor-producing substances in concentrations that cause nuisance or adversely affect beneficial uses. The Basin Plan requires the application of the most stringent objective necessary to ensure that surface water and groundwater do not contain chemical constituents, toxic substances, radionuclides, or taste and odor producing substances in concentrations that adversely affect domestic drinking water supply, agricultural supply, or any other beneficial use.

### A. Surface Water

1. CWA section 303(a-c), requires states to adopt water quality standards, including criteria where they are necessary to protect beneficial uses. The Regional Water Board adopted water quality criteria as water quality objectives in the Basin Plan. The Basin Plan states that "*[t]he numerical and narrative water quality objectives define the least stringent standards that the Regional Water Board will apply to regional waters in order to protect the beneficial uses*." The Basin Plan includes numeric and narrative water quality objectives for various beneficial uses and water bodies. This Order contains receiving surface water limitations based on the Basin Plan numerical and narrative water quality objectives for bacteria, biostimulatory substances, chemical constituents, color, dissolved oxygen, floating material, oil and

grease, pH, pesticides, radioactivity, sediment, settleable material, suspended material, taste and odors, temperature, toxicity, and turbidity.

2. **Temperature.** Order No. 5-01-122 contained a receiving water limitation for temperature based on a water quality objective contained in the Basin Plan, which states that "*At no time shall the temperature of … WARM intrastate waters be increased more than 5°F above natural receiving water temperature.*" In petitioning Order No. 5-01-122, the Discharger objected to the receiving water limitation for temperature. The Discharger argued that the limitation, which regulates increases over ambient temperature, is inappropriate because the Basin Plan objective addresses "natural receiving water temperature" and that Harding Drain has no natural temperature. In Order WQO 2002-0016, the State Water Board concluded that the Regional Water Board should impose appropriate temperature controls on the discharge based upon a site-specific study. The State Water Board stayed the receiving water limitation for temperature. In light of the fact that the Discharger is planning on moving the discharge from Harding Drain to the San Joaquin River during the term of this Order, a site-specific study to determine appropriate temperature limitations will not be required.

## B. Groundwater

1. The beneficial uses of the underlying ground water are municipal and domestic supply, industrial service supply, industrial process supply, and agricultural supply.

2. Basin Plan water quality objectives include narrative objectives for chemical constituents, tastes and odors, and toxicity of groundwater. The toxicity objective requires that groundwater be maintained free of toxic substances in concentrations that produce detrimental physiological responses in humans, plants, animals, or aquatic life. The chemical constituent objective states groundwater shall not contain chemical constituents in concentrations that adversely affect any beneficial use. The tastes and odors objective prohibits taste- or odor-producing substances in concentrations that cause nuisance or adversely affect beneficial uses. The Basin Plan also establishes numerical water quality objectives for chemical constituents and radioactivity in groundwaters designated as municipal supply. These include, at a minimum, compliance with MCLs in Title 22 of the CCR. The bacteria objective prohibits coliform organisms at or above 2.2 MPN/100 mL. The Basin Plan requires the application of the most stringent objective necessary to ensure that waters do not contain chemical constituents, toxic substances, radionuclides, taste- or odor-producing substances, or bacteria in concentrations that adversely affect municipal or domestic supply, agricultural supply, industrial supply or some other beneficial use.

3. Groundwater limitations are required to protect the beneficial uses of the underlying groundwater.

## VI. RATIONALE FOR MONITORING AND REPORTING REQUIREMENTS

40 CFR 122.48 requires that all NPDES permits specify requirements for recording and reporting monitoring results. Water Code sections 13267 and 13383 authorizes the Regional Water Board to require technical and monitoring reports. The Monitoring and Reporting Program (MRP), Attachment E of this Order, establishes monitoring and reporting requirements to implement federal and state requirements. The following provides the rationale for the monitoring and reporting requirements contained in the MRP for this Facility.

### A. Influent Monitoring

1. Influent monitoring is required to collect data on the characteristics of the wastewater and to assess compliance with effluent limitations (e.g., $BOD_5$ and TSS percent reduction requirements).

2. This Order retains continuous monitoring for flow; daily monitoring for $BOD_5$, TSS, electrical conductivity, and pH; and weekly monitoring for total dissolved solids of the influent from Order No. 5-01-122.

3. Influent monitoring for ammonia and hardness have not been retained from Order No. 5-01-122 as they are not necessary for the evaluation of treatment plant performance.

4. Order No. 5-01-122 required semi-annual monitoring of priority pollutants in the influent. The Discharger's application indicates that the estimated daily waste flow from all industrial discharges is 3.67 MGD, which accounts for approximately 32% of the influent to the Facility. The Regional Water Board finds that annual monitoring is sufficient to characterize the contribution of priority pollutants to the Facility. Therefore, the monitoring frequency for priority pollutants has been reduced from semi-annual to annual monitoring in this Order.

### B. Effluent Monitoring

1. Pursuant to the requirements of 40 CFR 122.44(i)(2) effluent monitoring is required for all constituents with effluent limitations. Effluent monitoring is necessary to assess compliance with effluent limitations, assess the effectiveness of the treatment process, and to assess the impacts of the discharge on the receiving stream and groundwater.

2. Effluent monitoring requirements for flow, chlorine residual, turbidity, pH, temperature, dissolved oxygen, $BOD_5$, TSS, total coliform organisms, hardness, aluminum, copper (total and dissolved), iron, manganese, mercury, and nitrate~~, and zinc~~ have been retained from Order No. 5-01-122 to characterize the effluent and determine compliance with applicable effluent limitations. In addition, and consistent with the requirements for other metals, effluent monitoring requirements have been added for lead and silver for discharges from Discharge Point No. 002 to characterize the effluent and determine compliance with the new effluent limitations.

3. Monitoring data collected over the term of Order No. 5-01-122 for oil and grease, MBAS, cyanide, molybdenum, settleable solids, standard minerals, ~~and~~ tributyltin, and zinc did not demonstrate reasonable potential to exceed water quality criteria. Thus, specific monitoring requirements for these parameters have not been retained from Order No. 5-01-122.

4. Monitoring data collected over the term of Order No. 5-01-122 for boron, carbon tetrachloride, chloride, chlorodibromomethane, dichlorobromomethane, and selenium indicate reasonable potential to exceed water quality criteria for these pollutants. Therefore, monthly effluent monitoring for boron, carbon tetrachloride, chloride, chlorodibromomethane, dichlorobromomethane, and selenium has been established in this Order.

5. Order No. 5-01-122 required monitoring for ammonia twice per week. Because untreated domestic wastewater contains ammonia and inadequate or incomplete nitrification may result in the discharge of ammonia to the receiving stream, effluent limitations for ammonia have been included in this Order. However, ammonia was not detected in the effluent based on monitoring data collected from October 2006 through April 2008. Therefore, the monitoring frequency for ammonia has been reduced from twice per week to once per week.

6. Effluent monitoring requirements for electrical conductivity and total dissolved solids have been reduced to weekly, which should provide sufficient information to characterize salinity in the effluent and determine compliance with effluent limitations.

7. As discussed in section IV.C.3 of this Fact Sheet, although there were several detections of bis (2-ethylhexyl) phthalate, due to concerns with contamination from plastics in monitoring equipment, it is uncertain whether bis (2-ethylhexyl) phthalate is truly present in the effluent discharge. To collect the data necessary to determine the prevalence in the effluent, this Order establishes quarterly monitoring for bis (2-ethylhexyl) phthalate.

8. Results of effluent monitoring conducted by the Discharger using Method EPA 622, from October 2006 through April 2008, indicate concentrations of diazinon and chlorpyrifos have been less than the analytical reporting limit or 0.08 µg/L. Diazinon and chlorpyrifos can now be analyzed using Method EPA 8141A, EPA Method 625M or equivalent GC/MS method to reporting limits of 0.020 µg/L and 0.010 µg/L, respectively. This Order retains quarterly monitoring for diazinon and chlorpyrifos, however, this Order specifies a lower reporting limit sufficient for comparison with the applicable diazinon and chlorpyrifos water quality objectives and for use in the additive toxicity calculation for the TMDL.

9. The San Joaquin River from the Merced River to the Tuolumne River and the Sacramento – San Joaquin Delta downstream of the discharge are on the 303(d) list for mercury. Therefore, this Order establishes monthly monitoring for total mercury and methylmercury in order to collect data on the presence of mercury in the effluent.

10. Priority pollutant data for the effluent has been provided by the Discharger over the term of Order No. 5-01-122, and was used to conduct a meaningful reasonable potential analysis. In accordance with Section 1.3 of the SIP, periodic monitoring for priority pollutants for which criteria or objectives apply and for which no effluent limitations have been established. Periodic priority pollutant monitoring is also necessary to provide data that would account for changes in the service population. Monitoring for priority pollutants is required once per month during the 3rd year of the permit term to provide the data necessary for determining the reasonable potential for those pollutants for which no WQBELs were established.

## C. Whole Effluent Toxicity Testing Requirements

1. **Acute Toxicity**. Order No. 5-01-122 specified that flow-through bioassays were to begin by 1 May 2006 for continuous sampling frequency for acute toxicity monitoring. The Discharger submitted a letter on 24 April 2006 requesting the flow-through bioassay requirement be removed. Prior to the requirement to conduct flow-through bioassays, the Discharger was allowed to use grab samples. As described in the Acute Toxicity Testing Manual (Version 5), the advantages of grab samples are that they are easy to collect; require a minimum of equipment and on-site time, and provide a measure of instantaneous toxicity. Therefore, consistent with requirements for other POTWs in the Central Valley Region, this Order requires monthly grab samples for acute toxicity monitoring. Monthly 96-hour bioassay testing is required to demonstrate compliance with the effluent limitation for acute toxicity.

2. **Chronic Toxicity.** Quarterly chronic whole effluent toxicity testing was required in Order No. 5-01-122 in order to demonstrate compliance with the Basin Plan's narrative toxicity objective. This monitoring requirement is retained in this Order to determine compliance with the narrative effluent limitations for chronic toxicity and the Basin Plan's narrative toxicity objective.

## D. Receiving Water Monitoring

### 1. Surface Water

a. Receiving water monitoring is necessary to assess compliance with receiving water limitations and to assess the impacts of the discharge on the receiving stream.

b. Order No. 5-01-122 established four receiving water monitoring stations: R1- TID Lateral 5 above the Hodges Drop (now referred to as RSW-001); R2- Harding Drain 100 feet below Hodges Drop (now referred to as RSW-002); R3- San Joaquin River 500 feet above Harding Drain; R4- San Joaquin River 1,000 feet below Harding Drain (now referred to as RSW-004). The Discharger is planning to construct a new outfall directly to the San Joaquin River and discontinue discharge to Harding Drain. The proposed outfall is located approximately 500 feet upstream in the San Joaquin River from the confluence of Harding Drain and

the San Joaquin River. Because this location is the same as R3, a new upstream receiving monitoring location will be established (RSW-003; in the San Joaquin River 1,000 feet above Harding Drain). Additionally, while Monitoring Location R4 is necessary to evaluate the effects of the discharge to Harding Drain in the San Joaquin River, monitoring at this location will be inappropriate upon commencement of discharges to the San Joaquin River as sampling at this location would be influenced by Harding Drain. Therefore, a new monitoring location, RSW-005, has been established in the San Joaquin River 50 feet upstream of the confluence with Harding Drain. Monitoring at RSW-001, RSW-002, and RSW-004 may be discontinued upon commencement of the discharge to the San Joaquin River.

c. As discussed in section IV.C.2.c of this Fact Sheet, a mixing zone has been granted for the calculation of water quality criteria for the protection of human health for carbon tetrachloride, chlorodibromomethane, and dichlorobromomethane. The Discharger reported in their mixing zone study that the size of the current mixing zone in the San Joaquin River extends approximately 3,000 meters (approximately 9,800 feet) downstream of the proposed discharge point into the San Joaquin River. Therefore, in order to evaluate the effects of the discharge on the receiving water at the edge of the mixing zone, quarterly monitoring of carbon tetrachloride, chlorodibromomethane, and dichlorobromomethane has been established at Monitoring Location RSW-006, at 9,800 feet downstream of Discharge Point No. 002.

d. Receiving water monitoring requirements for flow, dissolved oxygen, pH, turbidity, temperature, electrical conductivity, fecal coliform organisms, diazinon, and chlorpyrifos have been retained from Order No. 5-01-122. Monitoring for ammonia has been reduced from weekly to monthly.

e. Order No. 5-01-122 required semi-annual priority pollutant monitoring at RSW-001, RSW-002, RSW-003, and RSW-004. Because only upstream receiving water monitoring is necessary to determine reasonable potential, downstream priority pollutant monitoring requirements at RSW-002 and RSW-004 have been discontinued. Consistent with the effluent monitoring requirements, monthly monitoring during the 3rd year of the permit term for priority pollutants upstream of Discharge Point Nos. 001 and 002 at RSW-001 and RSW-003 is required to collect the necessary data to determine reasonable potential as required in section 1.2 of the SIP. The hardness (as $CaCO_3$) of the upstream receiving water shall also be monitoring concurrently with the priority pollutants as well as pH to ensure the water quality criteria/objectives are correctly adjusted for the receiving water when determining reasonable potential as specified in section 1.3 of the SIP.

## 2. Groundwater

a. Section 13267 of the California Water Code states, in part, *"(a) A Regional Water Board, in establishing…waste discharge requirements… may investigate the quality of any waters of the state within its region*" and *"(b) (1) In conducting an investigation…, the Regional Water Board may require that any person who… discharges… waste…that could affect the quality of waters within its region shall furnish, under penalty of perjury, technical or monitoring program reports which the Regional Water Board requires. The burden, including costs, of these reports shall bear a reasonable relationship to the need for the report and the benefits to be obtained from the reports*." In requiring those reports, the Regional Water Board shall provide the person with a written explanation with regard to the need for the reports, and shall identify the evidence that supports requiring that person to provide the reports. The Monitoring and Reporting Program (Attachment E) is issued pursuant to California Water Code Section 13267. The groundwater monitoring and reporting program required by this Order and the Monitoring and Reporting Program are necessary to assure compliance with these waste discharge requirements. The Discharger is responsible for the discharges of waste at the Facility subject to this Order.

b. Monitoring of the groundwater must be conducted to determine if the discharge has caused an increase in constituent concentrations, when compared to background. The monitoring must, at a minimum, require a complete assessment of groundwater impacts including the vertical and lateral extent of degradation, an assessment of all wastewater-related constituents that may have migrated to groundwater, an analysis of whether additional or different methods of treatment or control of the discharge are necessary to provide best practicable treatment or control to comply with Resolution No. 68-16. Economic analysis is only one of many factors considered in determining best practicable treatment or control. If monitoring indicates that the discharge has incrementally increased constituent concentrations in groundwater above background, this permit may be reopened and modified. This Order contains Groundwater Limitations that allow groundwater quality to be degraded for certain constituents when compared to background groundwater quality, but not to exceed water quality objectives. If groundwater quality has been degraded by the discharge, the incremental change in pollutant concentration (when compared with background) may not be increased. If groundwater quality has been or may be degraded by the discharge, this Order may be reopened and specific numeric limitations established consistent with Resolution No. 68-16 and the Basin Plan.

c. Groundwater monitoring data collected during the previous permit term showed no increase of constituents in groundwater in monitoring wells downstream of the emergency storage basin and sludge drying beds compared to monitoring wells upstream of the emergency storage basin and sludge drying beds. This Order requires the Discharger to continue groundwater monitoring and includes a regular schedule of groundwater monitoring in the attached Monitoring and Reporting Program. The groundwater monitoring reports are necessary to

continue evaluating impacts to waters of the State to assure protection of beneficial uses and compliance with Regional Water Board plans and policies, including Resolution No. 68-16. Evidence in the record includes effluent monitoring data that indicates the presence of constituents that may degrade groundwater and surface water.

d. Quarterly monitoring of groundwater elevation, electrical conductivity, total dissolve solids, pH, total coliform organisms, and nitrate and annual monitoring of standard minerals has been retained from Order No. 5-01-122. Quarterly monitoring for depth to groundwater, gradient, gradient direction, total nitrogen, ammonia (as $NH_4$), total Kjeldahl nitrogen, and fixed dissolved solids has been established to further characterize the underlying groundwater.

## E. Other Monitoring Requirements

### 1. Biosolids Monitoring

Biosolids monitoring is required to ensure compliance with the biosolids disposal requirements (Special Provisions VI.C.5.b). Biosolids disposal requirements are imposed pursuant to 40 CFR Part 503 to protect public health and prevent groundwater degradation.

### 2. Water Supply Monitoring

This Order retains monitoring requirements for standard minerals in the Discharger's water supply. In order to continue to evaluate the sources of salinity in the wastewater, this Order increases the monitoring frequency for electrical conductivity and total dissolved solids from semi-annually to quarterly.

### 3. Reclamation Monitoring

Reclamation monitoring is necessary to assess compliance with Title 22, California Code of Regulations, Section 60301, et. seq.

# VII. RATIONALE FOR PROVISIONS

## A. Standard Provisions

Standard Provisions, which apply to all NPDES permits in accordance with 40 CFR 122.41, and additional conditions applicable to specified categories of permits in accordance with 40 CFR 122.42, are provided in Attachment D. The Discharger must comply with all standard provisions and with those additional conditions that are applicable under 40 CFR 122.42.

40 CFR 122.41(a)(1) and (b) through (n) establish conditions that apply to all State-issued NPDES permits. These conditions must be incorporated into the permits either expressly or by reference. If incorporated by reference, a specific citation to the

regulations must be included in the Order. 40 CFR 123.25(a)(12) allows the state to omit or modify conditions to impose more stringent requirements. In accordance with 40 CFR 123.25, this Order omits federal conditions that address enforcement authority specified in 40 CFR 122.41(j)(5) and (k)(2) because the enforcement authority under the Water Code is more stringent. In lieu of these conditions, this Order incorporates by reference Water Code section 13387(e).

## B. Special Provisions

### 1. Reopener Provisions

a. **Mercury.** This provision allows the Regional Water Board to reopen this Order in the event mercury is found to be causing toxicity based on acute or chronic toxicity test results, or if a TMDL program is adopted. In addition, this Order may be reopened if the Regional Water Board determines that a mercury offset program is feasible for dischargers subject to NPDES permits.

b. **Whole Effluent Toxicity.** This Order requires the Discharger to investigate the causes of, and identify corrective actions to reduce or eliminate effluent toxicity through a Toxicity Reduction Evaluation (TRE). This Order may be reopened to include a numeric chronic toxicity limitation, a new acute toxicity limitation, and/or a limitation for a specific toxicant identified in the TRE. Additionally, if a numeric chronic toxicity water quality objective is adopted by the State Water Board, this Order may be reopened to include a numeric chronic toxicity limitation based on that objective.

c. **Water Effects Ratio (WER) and Metal Translators.** As described further in section IV.C.2.d of this Fact Sheet, site-specific translators were used to calculate water quality criteria for copper, lead, and zinc based on effluent data. For the remaining inorganic constituents, default dissolved-to-total metal translators have been used to convert water quality objectives from dissolved to total recoverable when developing effluent limitations for inorganic constituents contained within this Order. In addition, a default WER of 1.0 has been used in this Order for calculating criteria for applicable constituents. An acceptable WER can be used to adjust aquatic life-based water quality standards, including metals such as copper, and Basin Plan incorporated USEPA water quality standards for ammonia and aluminum. USEPA has also promulgated an objective for copper based on the Biotic Ligand Model (BLM) that can be used as the basis for site-specific copper effluent limitations. If the Discharger submits an approved report to determine site-specific WERs and/or site-specific dissolved-to-total metal translators, this Order may be reopened to modify the effluent limitations for the applicable constituents.

d. **Salinity (as Electrical Conductivity).** This provision allows the Regional Water Board to reopen this Order to modify the applicable effluent limitations based on new information provided by the TMDL program.

e. **Dynamic Modeling.** If the Discharger submits an approved dynamic modeling anaylsis for constituents regulated by this Order, this Order may be reopened to modify effluent limitations for the applicable constituents.

f. ~~**Compliance Schedule for Aluminum.** The Discharger submitted an Infeasibility Analysis Report to the Regional Water Board on 31 December 2008 requesting a compliance schedule to be included in the Order to achieve compliance with the final effluent limitations for aluminum based on the protection of freshwater aquatic life for discharges to the San Joaquin River. Based on monitoring data collected from October 2006 through December 2008, aluminum exceeded the average monthly effluent limitation of 261 µg/L in three sample points. However, the remaining 39 samples were below the effluent limitation, ranging from 20 µg/L to 230 µg/L. Given that the discharge to the San Joaquin River from Discharge Point No. 002 will not commence for at least 18 months, but possibly later, based on the time necessary to receive the proper approvals, put out bids for construction, and construct the outfall pipeline, the Regional Water Board finds that the Discharger is not in jeopardy of immediate non-compliance and that significant time is available within the Order itself to allow the Discharger to conduct additional monitoring and source identification studies. Therefore, a compliance schedule for compliance with the final effluent limitations for the discharge to the San Joaquin River has not been granted. This reopener allows the Regional Water Board to reopen the Order to include a compliance schedule to comply with final effluent limitations for aluminum based on the protection of freshwater aquatic life should additional effluent monitoring indicate that the Discharger is unable to comply with the final effluent limitations contained in section IV.B.1.a upon commencement the discharge to the San Joaquin River at Discharge Point No. 002.~~

g. ~~**Title 22 Engineering Report.** The Discharger is a producer of reclamation waters (see Section II of this Fact Sheet). This Order requires the Discharger to prepare a Title 22 Engineering Report that reflects its current reclamation uses and operations, and to submit the report to DHS and to the Executive Officer for approval. Accordingly, this provision allows the Regional Water Board to reopen this Order to modify, or add, limitations (e.g. effluent or groundwater) in the event that the report indicates that the Facility's operations, or reclamation uses, may pose threat to public or may negatively impact water quality (surface water or groundwater).~~

## 2. Special Studies and Additional Monitoring Requirements

a. **Chronic Whole Effluent Toxicity Requirements.** The Basin Plan contains a narrative toxicity objective that states, "*All waters shall be maintained free of toxic substances in concentrations that produce detrimental physiological responses in human, plant, animal, or aquatic life.*" (Basin Plan at III-8.00.) Based on quarterly whole effluent chronic toxicity testing performed by the Discharger from October 2006 through April 2008, the discharge has reasonable potential to

cause or contribute to an to an in-stream excursion above of the Basin Plan's narrative toxicity objective.

This provision requires the Discharger to develop a Toxicity Reduction Evaluation (TRE) Work Plan in accordance with USEPA guidance. In addition, the provision provides a numeric toxicity monitoring trigger and requirements for accelerated monitoring, as well as, requirements for TRE initiation if a pattern of toxicity has been demonstrated.

**Monitoring Trigger.** A numeric toxicity monitoring trigger of > 1 TUc (where TUc = 100/NOEC) is applied in the provision, because this Order does not allow any dilution for the chronic condition. Therefore, a TRE is triggered when the effluent exhibits a pattern of toxicity at 100% effluent.

**Accelerated Monitoring.** The provision requires accelerated WET testing when a regular WET test result exceeds the monitoring trigger. The purpose of accelerated monitoring is to determine, in an expedient manner, whether there is a pattern of toxicity before requiring the implementation of a TRE. Due to possible seasonality of the toxicity, the accelerated monitoring should be performed in a timely manner, preferably taking no more than 2 to 3 months to complete.

The provision requires accelerated monitoring consisting of four chronic toxicity tests every 2 weeks using the species that exhibited toxicity. Guidance regarding accelerated monitoring and TRE initiation is provided in the *Technical Support Document for Water Quality-based Toxics Control, EPA/505/2-90-001, March 1991* (TSD). The TSD at page 118 states, "*EPA recommends if toxicity is repeatedly or periodically present at levels above effluent limits more than 20 percent of the time, a TRE should be required.*" Therefore, four accelerated monitoring tests are required in this provision. If no toxicity is demonstrated in the four accelerated tests, then it demonstrates that toxicity is not present at levels above the monitoring trigger more than 20 percent of the time (only 1 of 5 tests are toxic, including the initial test). However, notwithstanding the accelerated monitoring results, if there is adequate evidence of a pattern of effluent toxicity (i.e. toxicity present exceeding the monitoring trigger more than 20 percent of the time), the Executive Officer may require that the Discharger initiate a TRE.

See the WET Accelerated Monitoring Flow Chart (Figure F-1), below, for further clarification of the accelerated monitoring requirements and for the decision points for determining the need for TRE initiation.

**TRE Guidance.** The Discharger is required to prepare a TRE Work Plan in accordance with USEPA guidance. Numerous guidance documents are available, as identified below:

- *Toxicity Reduction Evaluation Guidance for Municipal Wastewater Treatment Plants,* (EPA/833B-99/002), August 1999.

- Generalized Methodology for Conducting Industrial TREs*, (EPA/600/2-88/070), April 1989.*

- *Methods for Aquatic Toxicity Identification Evaluations: Phase I Toxicity Characterization Procedures,* Second Edition, EPA 600/6-91/005F, February 1991.

- *Toxicity Identification Evaluation: Characterization of Chronically Toxic Effluents, Phase I*, EPA 600/6-91/005F, May 1992.

- *Methods for Aquatic Toxicity Identification Evaluations: Phase II Toxicity Identification Procedures for Samples Exhibiting acute and Chronic Toxicity,* Second Edition, EPA 600/R-92/080, September 1993.

- *Methods for Aquatic Toxicity Identification Evaluations: Phase III Toxicity Confirmation Procedures for Samples Exhibiting Acute and Chronic Toxicity*, Second Edition, EPA 600/R-92/081, September 1993.

- *Methods for Measuring the Acute Toxicity of Effluents and Receiving Waters to Freshwater and Marine Organisms*, Fifth Edition, EPA-821-R-02-012, October 2002.

- *Short-term Methods for Estimating the Chronic Toxicity of Effluents and Receiving Waters to Freshwater Organisms*, Fourth Edition, EPA-821-R-02-013, October 2002.

- *Technical Support Document for Water Quality-based Toxics Control, EPA/505/2-90-001, March 1991*

## Figure F-1
## WET Accelerated Monitoring Flow Chart

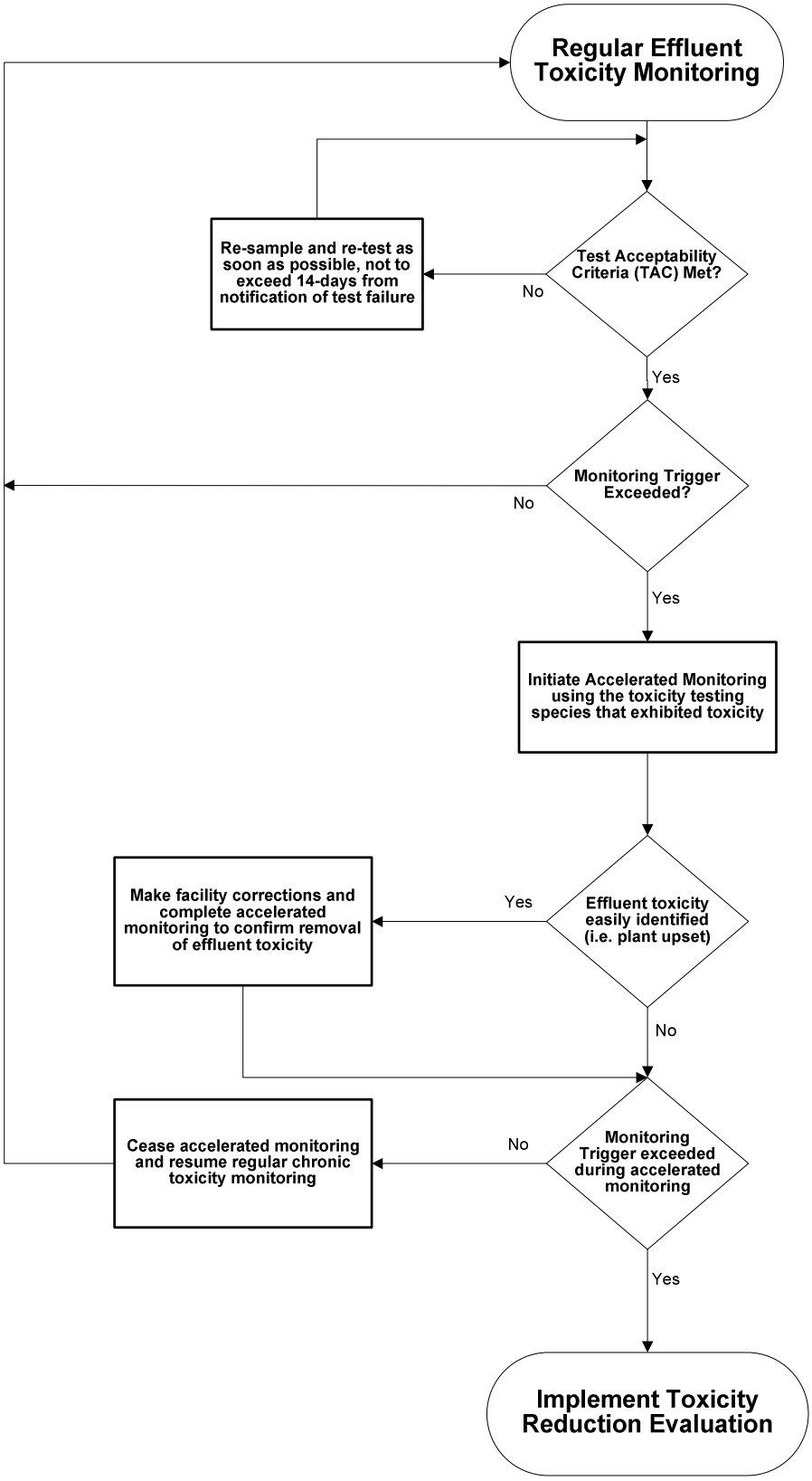

b. **Mixing Zone Study.** The Discharger conducted a mixing zone study prior to adoption of this Order to determine the size of the mixing zones for carcinogens and nitrate. Since the outfall to the San Joaquin River had not been constructed and the Facility had not begun discharging, certain assumptions had to be made and the model could not be calibrated or validated. Therefore, this Order requires the Discharger to conduct a mixing zone study following construction and operation of the outfall to the San Joaquin River to verify the results of the mixing zone study. A work plan and schedule for conducting the study shall be submitted to the Regional Water Board within 120 days after initiation of the discharge to the San Joaquin River. The mixing zone study shall be completed and submitted to the Regional Water Board within one year of approval of the work plan and schedule.

c. ~~**Title 22 Engineering Report.** The State of California Water Recycling Criteria (adopted 1 December 2000) require the submission of an engineering report to the Regional Water Board and DHS before recycled water projects are implemented. The Discharger is a producer of reclamation waters as previously detailed in Section II of this Fact Sheet; yet to date, has not completed, nor submitted, an Engineering Report pursuant to Section 60323 of CCR, Title 22. This provision is necessary to comply with the Water Recycling Criteria of the CCR, Title 22.~~

**3. Best Management Practices and Pollution Prevention**

a. **Salinity Source Control Program.** This provision requires the Discharger to provide annual reports demonstrating reasonable progress in the reduction of salinity in its discharge to the San Joaquin River, and is based on the Salinity Policy of the Sacramento-San Joaquin Rivers Basin Plan. ~~The Discharger is also required to participate financially in the development of the Central Valley Salinity Management Plan at a level commensurate with its contributions of salinity to the Delta.~~

**4. Construction, Operation, and Maintenance Specifications**

a. **Emergency Storage Basin Operating Requirements.** The operation and maintenance specifications for the emergency storage basin are necessary to ensure proper operation of the emergency storage basin and minimize the potential for impacts to groundwater quality.

Order No. 5-01-122 contained a land discharge specification at section D.8 which required that discharges from the emergency storage basin to Harding Drain meet all effluent limitations. However, discharges from the emergency storage basin do not occur. Wastewater in the emergency storage basin is recycled to the treatment plant as conditions allow. Therefore, this specification has not been retained in this Order.

The remaining specifications from Order No. 5-01-122 have been retained in this Order.

b. **Turbidity.** Operations specifications for turbidity are included as an indicator of the effectiveness of the treatment process and to assure compliance with effluent limitations for total coliform organisms. The tertiary treatment process is capable of reliably meeting a turbidity limitation of 2 nephelometric turbidity units (NTU) as a daily average. Failure of the treatment system such that virus removal is impaired would normally result in increased particles in the effluent, which result in higher effluent turbidity. Turbidity has a major advantage for monitoring filter performance, allowing immediate detection of filter failure and rapid corrective action. The operational specification requires that turbidity shall not exceed 2 NTU as a daily average; 5 NTU, more than 5 percent of the time within a 24-hour period; and an instantaneous maximum of 10 NTU.

**5. Special Provisions for Municipal Facilities (POTWs Only)**

a. **Pretreatment Requirements.**

i. The Federal Clean Water Act, Section 307(b), and Federal Regulations, 40 CFR Part 403, require publicly owned treatment works to develop an acceptable industrial pretreatment program. A pretreatment program is required to prevent the introduction of pollutants, which will interfere with treatment plant operations or sludge disposal, and prevent pass through of pollutants that exceed water quality objectives, standards or permit limitations. Pretreatment requirements are imposed pursuant to 40 CFR Part 403.

ii. The Discharger shall implement and enforce its approved pretreatment program and is an enforceable condition of this Order. If the Discharger fails to perform the pretreatment functions, the Regional Water Board, the State Water Board or USEPA may take enforcement actions against the Discharger as authorized by the CWA.

**6. Other Special Provisions**

a. **Ownership Change.** To maintain the accountability of the operation of the Facility, the Discharger is required to notify the succeeding owner or operator of the existence of this Order by letter if, and when, there is any change in control or ownership of land or waste discharge facilities presently owned or controlled by the Discharger.

**7. Compliance Schedules**

a. **Compliance Schedule for Final Effluent Limitations for Electrical Conductivity.** The Discharger shall comply with a time schedule to ensure compliance with the final effluent limitations for electrical conductivity, in accordance with the Salinity and Boron TMDL. The TMDL requires final

compliance by 28 July 2022 for wet through dry years and 28 July 2026 for critical years. ~~However, it is uncertain whether the compliance schedule allowed by the TMDL is as short as practicable for the Facility. Therefore, the Regional Water Board finds that it is appropriate to establish an initial compliance schedule allowing 8 years to come into compliance with the final effluent limitations, with the option to evaluate extending the compliance schedule with each permit renewal (i.e., every 5 years).~~ Consistent with the Regional Water Board's recommendations, this Order requires the Discharger to develop and implement a salinity source control program that will identify and implement measures to reduce salinity in the discharge to the San Joaquin River~~, and to participate financially in the development of the Central Valley Salinity Management Plan at a level commensurate with its contributions of salinity to the San Joaquin River~~. This Order contains interim performance based effluent limitations for electrical conductivity.

## VIII. PUBLIC PARTICIPATION

The California Regional Water Quality Control Board, Central Valley Region (Regional Water Board) is considering the issuance of waste discharge requirements (WDRs) that will serve as a National Pollutant Discharge Elimination System (NPDES) permit for the Facility. As a step in the WDR adoption process, the Regional Water Board staff has developed tentative WDRs. The Regional Water Board encourages public participation in the WDR adoption process.

### A. Notification of Interested Parties

The Regional Water Board has notified the Discharger and interested agencies and persons of its intent to prescribe waste discharge requirements for the discharge and has provided them with an opportunity to submit their written comments and recommendations. Notification was provided through publication of a Notice of Public Hearing (Notice) in the Turlock Daily Journal~~ on 13 December 2008~~. The Notice was also posted at the Turlock City Hall and at the entrance to the Facility.

### B. Written Comments

The staff determinations are tentative. Interested persons are invited to submit written comments concerning these tentative WDRs. Comments must be submitted either in person or by mail to the Executive Office at the Regional Water Board at the address above on the cover page of this Order.

To be fully responded to by staff and considered by the Regional Water Board, written comments should be received at the Regional Water Board offices by 5:00 p.m. on **~~11 September~~20 November 2009**.

## C. Public Hearing

The Regional Water Board will hold a public hearing on the tentative WDRs during its regular Board meeting on the following date and time and at the following location:

Date: 27/28/29 ~~October~~ January 2010~~9~~
Time: 8:30 am
Location: Regional Water Quality Control Board, Central Valley Region
11020 Sun Center Dr., Suite #200
Rancho Cordova, CA 95670

Interested persons are invited to attend. At the public hearing, the Regional Water Board will hear testimony, if any, pertinent to the discharge, WDRs, and permit. Oral testimony will be heard; however, for accuracy of the record, important testimony should be in writing.

Please be aware that dates and venues may change. Our Web address is http://www.waterboards.ca.gov/rwqcb5/ where you can access the current agenda for changes in dates and locations.

## D. Waste Discharge Requirements Petitions

Any aggrieved person may petition the State Water Resources Control Board to review the decision of the Regional Water Board regarding the final WDRs. The petition must be submitted within 30 days of the Regional Water Board's action to the following address:

State Water Resources Control Board
Office of Chief Counsel
P.O. Box 100, 1001 I Street
Sacramento, CA 95812-0100

## E. Information and Copying

The Report of Waste Discharge (ROWD), related documents, tentative effluent limitations and special provisions, comments received, and other information are on file and may be inspected at the address above at any time between 8:30 a.m. and 4:45 p.m., Monday through Friday. Copying of documents may be arranged through the Regional Water Board by calling (916) 464-3291.

## F. Register of Interested Persons

Any person interested in being placed on the mailing list for information regarding the WDRs and NPDES permit should contact the Regional Water Board, reference this facility, and provide a name, address, and phone number.

## G. Additional Information

Requests for additional information or questions regarding this order should be directed to Jim Marshall at (916) 464-4772.

## ATTACHMENT G – SUMMARY OF REASONABLE POTENTIAL ANALYSIS

### Table G-1. Summary of Reasonable Potential Analysis for Discharge Point No. 001

| Constituent | Units | MEC | B | C | CMC | CCC | Water & Org | Org. Only | Basin Plan | MCL | Reasonable Potential |
|---|---|---|---|---|---|---|---|---|---|---|---|
| Aluminum, Total Recoverable | µg/L | 640 | 500 | 200 | 750[1] | 87[2,3] | -- | -- | -- | 200 | Yes |
| Aluminum, Dissolved | µg/L | 41.3 | -- | -- | -- | -- | -- | -- | -- | -- | No |
| Aluminum, Acid-Soluble | µg/L | 56.3 | -- | -- | -- | -- | -- | -- | -- | -- | No |
| Antimony, Total Recoverable | µg/L | 1.3 | 1 | 6 | -- | -- | 14 | 4,300 | -- | 6 | No |
| Ammonia Nitrogen, Total (as N) | mg/L | <1 | 4 | 2.14 | 2.14[1] | 2.67[4] | -- | -- | -- | -- | Yes[5] |
| Arsenic, Total Recoverable | µg/L | 9 | 2 | 10 | 340 | 150 | -- | -- | -- | 10 | No |
| Barium, Total Recoverable | µg/L | 67 | 80 | 1,000 | -- | -- | -- | -- | -- | 1,000 | No |
| Bis (2-Ethylhexyl) Phthalate | µg/L | 17.5 | 19 | 1.8 | -- | -- | 1.8 | 5.9 | -- | 4 | No[6] |
| Boron, Total Recoverable | µg/L | 325 | 103 | 700[7] | -- | -- | -- | -- | -- | -- | No |
| Bromoform | µg/L | 0.8 | <2 | 4.3 | -- | -- | 4.3 | 360 | -- | 80 | No |
| Carbon Tetrachloride | µg/L | 1.9 | <0.5 | 0.25 | -- | -- | 0.25 | 4.4 | -- | 0.5 | Yes |
| Chloride | mg/L | 154 | -- | 106[7] | 860[1] | 230[2] | -- | -- | -- | 250 | Yes[8] |
| Chlorodibromomethane | µg/L | 10.3 | <0.5 | 0.41 | -- | -- | 0.41 | 34 | -- | 80 | Yes |
| Chloroform | µg/L | 41.4 | <0.5 | 80 | -- | -- | -- | -- | -- | 80 | No |
| Chromium, Total Recoverable | µg/L | 14 | 4 | 50 | -- | -- | -- | -- | -- | 50 | No |
| Copper, Total Recoverable | µg/L | 16 | 12 | 12 | 15 | 12 | 1,300 | -- | -- | 1,000 | Yes |
| Copper, Dissolved | µg/L | 8 | 2.7 | 8.1 | 12 | 8.1 | -- | -- | -- | -- | No |
| 1,4-Dichlorobenzene | µg/L | 0.3 | <2 | 5 | -- | -- | 400 | 2,600 | -- | 5 | No |
| Dichlorobromomethane | µg/L | 28.9 | <0.5 | 0.56 | -- | -- | 0.56 | 46 | -- | 80 | Yes |
| Diethyl Phthalate | µg/L | 2.4 | 2.4 | 23,000 | -- | -- | 23,000 | 120,000 | -- | -- | No |
| Electrical Conductivity @ 25°C | µmhos/cm | 1,198 | -- | 700 | -- | -- | -- | -- | 700 | 900 | Yes |
| Fluoride | µg/L | 0.16 | -- | 2,000 | -- | -- | -- | -- | -- | 2,000 | No |
| Iron, Total Recoverable | µg/L | 300 | 271 | 300 | -- | -- | -- | -- | -- | 300 | No[9] |

| Constituent | Units | MEC | B | C | CMC | CCC | Water & Org | Org. Only | Basin Plan | MCL | Reasonable Potential |
|---|---|---|---|---|---|---|---|---|---|---|---|
| Lead, Total Recoverable | µg/L | 1.4 | 2 | 2.9 | 61 | 2.9 | -- | -- | -- | 15 | No |
| Lead, Dissolved | µg/L | 0.277 | -- | 2.2 | 57 | 2.2 | -- | -- | -- | -- | No |
| Manganese, Total Recoverable | µg/L | 50 | 20 | 50 | -- | -- | -- | -- | -- | 50 | No[9] |
| Mercury, Total Recoverable | µg/L | 0.0134 | 0.00286 | 0.050 | -- | -- | 0.050 | 0.051 | -- | 2 | No |
| Methyl Chloride | µg/L | 19 | <2 | -- | -- | -- | -- | -- | -- | -- | No |
| 3-Methyl 4-Chlorophenol | µg/L | <1 | <4 | -- | -- | -- | -- | -- | -- | -- | No |
| Methylene Blue Activated Substances | µg/L | 530 | -- | 500 | -- | -- | -- | -- | -- | 500 | No[9] |
| Methylene Chloride | µg/L | 1.2 | 1.1 | 4.7 | -- | -- | 4.7 | 1,600 | -- | 5 | No |
| Molybdenum, Total Recoverable | µg/L | 8 | 0.5 | 10[7] | -- | -- | -- | -- | -- | -- | No |
| Naphthalene | µg/L | 0.4 | <10 | 21[10] | -- | -- | -- | -- | -- | -- | No |
| Nickel, Total Recoverable | µg/L | 3.3 | 2.2 | 47~~.27~~ | 425 | 47 | 610 | 4,600 | -- | 100 | No |
| Nitrate Nitrogen, Total (as N) | m~~µ~~g/L | ~~28,200~~31 | -- | ~~10,000~~10 | -- | -- | -- | -- | -- | 10~~,000~~ | Yes |
| Phosphorus | µg/L | 3,530 | -- | -- | -- | -- | -- | -- | -- | -- | No |
| Selenium, Total Recoverable | µg/L | 5 | <1 | 5.0 | 20 | 5 | -- | -- | -- | 20 | Yes |
| Silver, Total Recoverable | µg/L | 2.6 | <2 | 3.3~~2~~ | 3.3~~2~~ | -- | -- | -- | -- | 100 | No |
| Sulfate | mg/L | 80.6 | -- | 250 | -- | -- | -- | -- | -- | 250 | No |
| Toluene | µg/L | 0.6 | <2 | 42[10] | -- | -- | 6,800 | 200,000 | -- | 150 | No |
| Total Dissolved Solids | mg/L | 722 | -- | 500 | -- | -- | -- | -- | -- | 500 | Yes[8] |
| Tributyltin | µg/L | 0.011 | -- | 0.072 | 0.46[1] | 0.072[2] | -- | -- | -- | -- | No |
| o-Xylene | µg/L | 0.5 | <0.5 | 20 | -- | -- | -- | -- | -- | 20 | No |
| Zinc, Total Recoverable | µg/L | 62.9 | 80 | 106 | 106 | 111 | -- | -- | -- | 5,000 | No |
| Zinc, Dissolved | µg/L | 61 | -- | 106 | 106 | 107 | -- | -- | -- | -- | No |

| Constituent | Units | MEC | B | C | CMC | CCC | Water & Org | Org. Only | Basin Plan | MCL | Reasonable Potential |
|---|---|---|---|---|---|---|---|---|---|---|---|

General Note: All inorganic concentrations are given as a total recoverable.
MEC = Maximum Effluent Concentration
B = Maximum Receiving Water Concentration or lowest detection level, if non-detect
C = Criterion used for Reasonable Potential Analysis
CMC = Criterion Maximum Concentration (CTR or NTR)
CCC = Criterion Continuous Concentration (CTR or NTR)
Water & Org = Human Health Criterion for Consumption of Water & Organisms (CTR or NTR)
Org. Only = Human Health Criterion for Consumption of Organisms Only (CTR or NTR)
Basin Plan = Numeric Site-specific Basin Plan Water Quality Objective
MCL = Drinking Water Standards Maximum Contaminant Level
NA = Not Available
ND = Non-detect

Footnotes:
(1) USEPA National Recommended Ambient Water Quality Criteria, Freshwater Aquatic Life Protection, 1-hour Average
(2) USEPA National Recommended Ambient Water Quality Criteria, Freshwater Aquatic Life Protection, 4-day Average.
(3) The chronic criterion for the protection of freshwater aquatic life of 87 µg/L may not be applicable because receiving water conditions are not similar to those under which the criterion was developed. The discharge does exhibit reasonable potential to exceed the acute criterion for the protection of freshwater aquatic life and the secondary MCL for aluminum.
(4) USEPA National Recommended Ambient Water Quality Criteria, Freshwater Aquatic Life Protection, 30-day Average.
(5) Untreated domestic wastewater contains ammonia. The Discharger currently uses nitrification to remove ammonia from the waste stream. Inadequate or incomplete nitrification may result in the discharge of ammonia to the receiving stream. Therefore, ammonia in the discharge has a reasonable potential to exceed the freshwater aquatic life criteria for ammonia.
(6) Due to potential contamination of effluent samples, reasonable potential for bis (2-ethylhexyl) phthalate cannot be determined.
(7) Water Quality for Agriculture.
(8) Electrical conductivity is an indicator parameter for salinity, including total dissolved solids and chloride. Establishing effluent limitations for electrical conductivity is expected to effectively limit the constituents that contribute to salinity, including total dissolved solids and chloride. Therefore, effluent limitations for total dissolved solids and chloride are not established in this Order.
(9) There is no reasonable potential for these parameters when evaluating data based on an annual average basis.
(10) Odor Threshold (Amoore and Hautala)

## Table G-2. Summary of Reasonable Potential Analysis for Discharge Point No. 002

| Constituent | Units | MEC | B | C | CMC | CCC | Water & Org | Org. Only | Basin Plan | MCL | Reasonable Potential |
|---|---|---|---|---|---|---|---|---|---|---|---|
| Aluminum, Total Recoverable | µg/L | 640 | 4,400 | 200 | 750[1] | 87[2,3] | -- | -- | -- | 200 | Yes |
| Aluminum, Dissolved | µg/L | 41.3 | 134 | -- | -- | -- | -- | -- | -- | -- | No |
| Aluminum, Acid-Soluble | µg/L | 56.3 | 457 | -- | -- | -- | -- | -- | -- | -- | No |
| Ammonia Nitrogen, Total (as N) | mg/L | <1 | <1 | 2.14 | 2.14[1] | 3.68[4] | -- | -- | -- | -- | Yes[5] |
| Antimony, Total Recoverable | µg/L | 1.3 | 1 | 6 | -- | -- | 14 | 4,300 | -- | 6 | No |
| Arsenic, Total Recoverable | µg/L | 9 | 4.3 | 10 | 340 | 150 | -- | -- | -- | 10 | No |
| Barium, Total Recoverable | µg/L | 67 | 80 | 1,000 | -- | -- | -- | -- | -- | 1,000 | No |
| Bis (2-Ethylhexyl) Phthalate | µg/L | 17.5 | 12.3 | 1.8 | -- | -- | 1.8 | 5.9 | -- | 4 | No[6] |
| Boron, Total Recoverable | µg/L | 325 | 877 | 800 | -- | -- | -- | -- | 800 | -- | Yes |
| Bromoform | µg/L | 0.8 | <2 | 4.3 | -- | -- | 4.3 | 360 | -- | 80 | No |
| Carbon Tetrachloride | µg/L | 1.9 | <0.5 | 0.25 | -- | -- | 0.25 | 4.4 | -- | 0.5 | Yes |
| Chloride | mg/L | 154 | 487 | 106[7] | 860[1] | 230[2] | -- | -- | -- | 250 | Yes |
| Chlorodibromomethane | µg/L | 10.3 | <0.5 | 0.41 | -- | -- | 0.41 | 34 | -- | 80 | Yes |
| Chloroform | µg/L | 41.4 | <0.5 | 80 | -- | -- | -- | -- | -- | 80 | No |
| Chromium, Total Recoverable | µg/L | 14 | 6 | 50 | -- | -- | -- | -- | -- | 50 | No |
| Copper, Total Recoverable | µg/L | 16 | 17 | 12 | 15 | 12 | 1,300 | -- | -- | 1,000 | Yes |
| Copper, Dissolved | µg/L | 8 | 2.64 | 8.1 | 12 | 8.1 | -- | -- | -- | -- | No |
| 1,4-Dichlorobenzene | µg/L | 0.3 | 0.3 | 5 | -- | -- | 400 | 2,600 | -- | 5 | No |
| Dichlorobromomethane | µg/L | 28.9 | <0.5 | 0.56 | -- | -- | 0.56 | 46 | -- | 80 | Yes |
| Diethyl Phthalate | µg/L | 2.4 | 4.9 | 23,000 | -- | -- | 23,000 | 120,000 | -- | -- | No |
| Electrical Conductivity @ 25°C | µmhos/cm | 1,198 | -- | 700 | -- | -- | -- | -- | 700 | 900 | Yes |
| Fluoride | µg/L | 0.16 | -- | 2,000 | -- | -- | -- | -- | -- | 2,000 | No |
| Iron, Total Recoverable | µg/L | 300 | 3,360 | 300 | -- | -- | -- | -- | -- | 300 | Yes |
| Lead, Total Recoverable | µg/L | 1.4 | 1.52 | 3.0 | 19 | 1.0 | -- | -- | -- | 15 | Yes |
| Lead, Dissolved | µg/L | 0.277 | 0.173 | 2.3 | 57 | 2.3 | -- | -- | -- | -- | No |

| Constituent | Units | MEC | B | C | CMC | CCC | Water & Org | Org. Only | Basin Plan | MCL | Reasonable Potential |
|---|---|---|---|---|---|---|---|---|---|---|---|
| Manganese, Total Recoverable | µg/L | 50 | 292 | 50 | -- | -- | -- | -- | -- | 50 | Yes |
| Mercury, Total Recoverable | µg/L | 0.0134 | 0.00875 | 0.050 | -- | -- | 0.050 | 0.051 | -- | 2 | No |
| Methyl Chloride | µg/L | 19 | <2 | -- | -- | -- | -- | -- | -- | -- | No |
| Methylene Chloride | µg/L | 1.2 | 0.97 | 4.7 | -- | -- | 4.7 | 1,600 | -- | 5 | No |
| Methylene Blue Activated Substances | µg/L | 530 | -- | 500 | -- | -- | -- | -- | -- | 500 | No[8] |
| Molybdenum, Total Recoverable | µg/L | 8 | 7 | 10[7] | -- | -- | -- | -- | 10 | -- | No |
| Naphthalene | µg/L | 0.4 | <10 | 21[9] | -- | -- | -- | -- | -- | -- | No |
| Nickel, Total Recoverable | µg/L | 3.3 | 6.8 | 47.27 | 425 | 47.27 | 610 | 4,600 | -- | 100 | No |
| Nitrate Nitrogen, Total (as N) | mg/L | ~~28.2~~31 | -- | 10 | -- | -- | -- | -- | -- | 10 | Yes |
| Phosphorus | µg/L | 3,530 | -- | -- | -- | -- | -- | -- | -- | -- | No |
| Selenium, Total Recoverable | µg/L | 5 | 2.6 | 5.0 | 20 | 5 | -- | -- | 5 | 20 | Yes |
| Silver, Total Recoverable | µg/L | 2.6 | <2 | 3.45 | 0.6 | -- | -- | -- | -- | 100 | Yes |
| Sulfate | mg/L | 80.6 | 297 | 250 | -- | -- | -- | -- | -- | 250 | Yes[10] |
| Toluene | µg/L | 0.6 | <2 | 42[9] | -- | -- | 6,800 | 200,000 | -- | 150 | No |
| Total Dissolved Solids | mg/L | 722 | -- | 500 | -- | -- | -- | -- | -- | 500 | Yes[10] |
| Tributyltin | µg/L | 0.011 | -- | 0.072 | 0.46[1] | 0.072[2] | -- | -- | -- | -- | No |
| o-Xylene | µg/L | 0.5 | <0.5 | 20 | -- | -- | -- | -- | -- | 20 | No |
| Zinc, Total Recoverable | µg/L | 62.9 | 12 | 106 | 106 | 111 | -- | -- | -- | 5,000 | No |
| Zinc, Dissolved | µg/L | 61 | 2 | 106 | 106 | 107 | -- | -- | -- | -- | No |

| Constituent | Units | MEC | B | C | CMC | CCC | Water & Org | Org. Only | Basin Plan | MCL | Reasonable Potential |
|---|---|---|---|---|---|---|---|---|---|---|---|

MEC = Maximum Effluent Concentration
B = Maximum Receiving Water Concentration or lowest detection level, if non-detect
C = Criterion used for Reasonable Potential Analysis
CMC = Criterion Maximum Concentration (CTR or NTR)
CCC = Criterion Continuous Concentration (CTR or NTR)
Water & Org = Human Health Criterion for Consumption of Water & Organisms (CTR or NTR)
Org. Only = Human Health Criterion for Consumption of Organisms Only (CTR or NTR)
Basin Plan = Numeric Site-specific Basin Plan Water Quality Objective
MCL = Drinking Water Standards Maximum Contaminant Level

Footnotes:

(1) USEPA National Recommended Ambient Water Quality Criteria, Freshwater Aquatic Life Protection, 1-hour Average
(2) USEPA National Recommended Ambient Water Quality Criteria, Freshwater Aquatic Life Protection, 4-day Average.
(3) The chronic criterion for the protection of freshwater aquatic life of 87 µg/L may not be applicable because receiving water conditions are not similar to those under which the criterion was developed. The discharge does exhibit reasonable potential to exceed the acute criterion for the protection of freshwater aquatic life and the secondary MCL for aluminum.
(4) USEPA National Recommended Ambient Water Quality Criteria, Freshwater Aquatic Life Protection, 30-day Average.
(5) Untreated domestic wastewater contains ammonia. The Discharger currently uses nitrification to remove ammonia from the waste stream. Inadequate or incomplete nitrification may result in the discharge of ammonia to the receiving stream. Therefore, ammonia in the discharge has a reasonable potential to exceed the freshwater aquatic life criteria for ammonia.
(6) Due to potential contamination of effluent samples, effluent limitations for bis (2-ethylhexyl) phthalate are not established in this Order.
(7) Water Quality for Agriculture
(8) There is no reasonable potential for this parameter when evaluating data based on an annual average basis.
(9) Odor Threshold (Amoore and Hautala)
(10) Electrical conductivity is an indicator parameter for salinity, including sulfate and total dissolved solids. Establishing effluent limitations for electrical conductivity is expected to effectively limit the constituents that contribute to salinity, including sulfate, and total dissolved solids. Therefore, effluent limitations for sulfate and total dissolved solids are not established in this Order.

H

# ATTACHMENT H – GUIDELINES FOR PREPARATION OF AN ENGINEERING REPORT FOR THE PRODUCTION, DISTRIBUTION, AND USE OF RECYCLED WATER

STATE OF CALIFORNIA-HEALTH AND HUMAN SERVICES AGENCY GRAY DAVIS, *GOVERNOR*
DEPARTMENT OF HEALTH SERVICES
**DIVISION OF DRINKING WATER**
**RECYCLED WATER UNIT**

## GUIDELINES FOR THE PREPARATION OF AN ENGINEERING REPORT FOR THE PRODUCTION, DISTRIBUTION AND USE OF RECYCLED WATER

**March 2001**
**(Replaces September 1997 Version)**

## 1.0 INTRODUCTION

The current State of California Water Recycling Criteria (adopted in December 2000) require the submission of an engineering report to the California Regional Water Quality Control Board (RWQCB) and the Department of Health Services (DHS) before recycled water projects are implemented. These reports must also be amended prior to any modification to existing projects. The purpose of an engineering report is to describe the manner by which a project will comply with the Water Recycling Criteria. The Water Recycling Criteria are contained in Sections 60301 through 60355, inclusive, of the California Code of Regulations, Title 22. The Criteria prescribe:

* Recycled water quality and wastewater treatment requirements for the various types of allowed uses,

* Use area requirements pertaining to the actual location of use of the recycled water (including dual plumbed facilities), and

~~* Reliability features required in the treatment facilities to ensure safe performance.~~

~~Section 60323 of the Water Recycling Criteria specifies that the engineering report be prepared by a properly qualified engineer, registered in California and experienced in the field of wastewater treatment.~~

~~Recycled water projects vary in complexity. Therefore, reports will vary in content, and the detail presented will depend on the scope of the proposed project and the number and nature of the agencies involved in the production, distribution, and use of the recycled water. The report should contain sufficient information to assure the regulatory agencies that the degree and reliability of treatment is commensurate with the requirements for the proposed use, and that the distribution and use of the recycled water will not create a health hazard or nuisance.~~

~~The intent of these guidelines is to provide a framework to assist in developing a comprehensive report which addresses all necessary elements of a proposed or modified project. Such a report is necessary to allow for the required regulatory review and approval of a recycled water project.~~

~~References which may assist in addressing various project elements include:~~

- ~~State of California Water Recycling Criteria (December 2000)~~
- ~~State of California Regulations Relating to Cross-Connections~~
- ~~California Waterworks Standards~~
- ~~California Water Code~~
- ~~Guidelines for the Distribution of Non-potable Water, (California-Nevada Section-AWWA, 1992)~~
- ~~Guidelines For The On-Site Retrofit of Facilities Using Disinfected Tertiary Recycled Water (California-Nevada Section-AWWA, 1997)~~
- ~~Manual of Cross-Connection Control/Procedures and Practices (DOHS)~~
- ~~Ultraviolet Disinfection – Guidelines for Drinking Water and Water Reuse (NWRI/AWWARF, December 2000)~~

## ~~2.0 RECYCLED WATER~~

~~The following sections discuss the type of information that should be presented and described in the engineering report. Some sections are applicable only to certain types of uses.~~

### ~~2.1 General~~

~~The report shall identify all agencies or entities that will be involved in the design, treatment, distribution, construction, operation and maintenance of the recycled facilities, including a description of any legal arrangements outlining authorities and responsibilities between the agencies with respect to treatment, distribution and use of recycled water. In areas where more than one agency/entity is involved in the reuse project, a description of arrangements for coordinating all reuse-related activities (e.g. line construction/repairs) shall be provided.~~

~~An organizational chart may be useful~~

### ~~2.2 Rules and Regulations~~

~~The procedures, restrictions, and other requirements that will be imposed by the distributor and/or user should be described.~~

~~In multiple projects covered under a Master Permit issued by the Regional Boards where the reuse oversight responsibility is delegated to the distributor and/or user, the requirements and restrictions should be codified into a set of enforceable rules and regulations. The rules and regulations should include a compliance program to be used to protect the public health and prevent cross connections. Describe in the report the adoption of enforceable rules and regulations that cover all of the design and construction, operation and maintenance of the distribution systems and use areas, as well as use area control measures. Provide a description of the organization of the agency or agencies who has the authority to implement and enforce the rules and regulations, and the responsibilities of pertinent personnel involved in the reuse program.~~

~~Reference to any ordinances, rules of service, contractual arrangements, etc. should be provided.~~

### ~~2.3 Producer – Distributor - User~~

~~The producer is the public or private entity that will treat and/or distribute the recycled water used in the project. Where more than one entity is involved in the treatment or distribution of the recycled water, the roles and responsibilities of each entity (i.e. producer, distributor, user) should be described.~~

~~**2.4 Raw Wastewater**~~

~~Describe the chemical quality, including ranges with median and 95th percentile values;~~

~~Describe the source of the wastewater to be used and the proportion and types of industrial waste, and~~

~~Describe all source control programs.~~

~~**2.5 Treatment Processes**~~

~~Provide a schematic of the treatment train;~~

~~Describe the treatment processes including loading rates and contact times;~~

~~filtration design criteria should be provided (filtration and backwash rates, filter depth and media specifications, etc.). The expected turbidities of the filter influent (prior to the addition of chemicals) and the filter effluent should be stated;~~

~~State the chemicals that will be used, the method of mixing, the degree of mixing, the point of application, and the dosages. Also describe the chemical storage and handling facilities, and~~

~~Description of the operation and maintenance manuals available.~~

~~**2.6 Plant Reliability Features**~~

~~The plant reliability features proposed to comply with Sections 60333 – 60355 of the Water Recycling Criteria should be described in detail. The discussion of each reliability feature should state under what conditions it will be actuated. When alarms are used to indicate system failure, the report should state where the alarm will be received, how the location is staffed, and who will be notified. The report should also state the hours that the plant will be staffed.~~

## ~~2.7 Supplemental Water Supply~~

~~The report should describe all supplemental water supplies. The description should include:~~

* ~~Purpose~~
* ~~Source~~
* ~~Quality~~
* ~~Quantity available~~
* ~~Cross-connection control and backflow prevention measures~~

## ~~2.8 Monitoring and Reporting~~

~~The report should describe the planned monitoring and reporting program, including all monitoring required by the Water Recycling Criteria, and include the frequency and location of sampling. Where continuous analysis and recording equipment is used, the method and frequency of calibration should be stated. All analyses shall be performed by a laboratory approved by the State Department of Health Services.~~

## ~~2.9 Contingency Plan~~

~~Section 60323 (c) of the Water Recycling Criteria requires that the engineering report contain a contingency plan designed to prevent inadequately treated wastewater from being delivered to the user. The contingency plan should include:~~

* ~~A list of conditions which would require an immediate diversion to take place;~~
* ~~A description of the diversion procedures;~~
* ~~A description of the diversion area including capacity, holding time and return capabilities;~~
* ~~A description of plans for activation of supplemental supplies (if applicable);~~

~~* A plan for the disposal or treatment of any inadequately treated effluent;~~

~~* A description of failsafe features in the event of a power failure, and~~

~~A plan (including methods) for notifying the recycled water user(s), the regional board, the state and local health departments, and other agencies as appropriate, of any treatment failures that could result in the delivery of inadequately treated recycled water to the use area.~~

## ~~3.0 TRANSMISSION AND DISTRIBUTION SYSTEMS~~

~~Maps and/or plans showing the location of the transmission facilities and the distribution system layout should be provided. The plans should include the ownership and location of all potable water lines, recycled water lines and sewer lines within the recycled water service area and use area(s).~~

## ~~4.0 USE AREAS~~

~~The description of each use area should include:~~

~~* The type of land uses;~~

~~* The specific type of reuse proposed;~~

~~* The party(s) responsible for the distribution and use of the recycled water at the site;~~

~~* Identification of other governmental entities which may have regulatory jurisdiction over the re-use site such as the US Department of Agriculture, State Department of Health Services, Food and Drug Branch, the State Department of Health Services, Licensing and Certification Section, etc. These agencies should also be provided with a copy of the Title 22 Engineering Report for review and comment.~~

~~* Use area containment measures;~~

~~* A map showing:~~

~~-Specific areas of use~~

~~-Areas of public access~~

~~-Surrounding land uses~~

~~-The location and construction details of wells in or within 1000 feet of the use area~~

~~-Location and type of signage~~

~~* The degree of potential access by employees or the public;~~

~~* For use areas where both potable and recycled water lines exist, a description of the cross-connection control procedures which will be used.~~

~~In addition to the general information described above, the following should be provided for the following specific proposed uses:~~

~~**4.1 Irrigation**~~

~~-Detailed plans showing all piping networks within the use area including recycled, potable, sewage and others as applicable.~~

~~-Description of what will be irrigated (e.g. landscape, specific food crop, etc.);~~

~~-Method of irrigation (e.g. spray, flood, or drip);~~

~~-The location of domestic water supply facilities in or adjacent to the use area;~~

~~-Site containment measures;~~
~~-Measures to be taken to minimize ponding;~~

~~-The direction of drainage and a description of the area to which the drainage will flow;~~

~~-A map and/or description of how the setback distances of Section 60310 will be maintained;~~

~~-Protection measures of drinking water fountains and designated outdoor eating areas, if applicable;~~

~~-Location and wording of public warning signs, and~~

~~-The proposed irrigation schedule (if public access is included).~~

~~-Measures to be taken to exclude or minimize public contact.~~

~~**4.2 Impoundments**~~

~~-The type of use or activity to be allowed on the impoundment;~~

~~-Description of the degree of public access;~~

~~-The conditions under which the impoundment can be expected to overflow and the expected frequency, and~~

~~-The direction of drainage and a description of the area to which the drainage will flow.~~

~~**4.3 Cooling**~~

~~-Type of cooling system (e.g. cooling tower, spray, condenser, etc.);~~

~~-Type of biocide to be used, if applicable;~~

~~-Type of drift eliminator to be used, if applicable, and~~

~~-Potential for employee or public exposure, and mitigative measures to be employed.~~

~~**4.4 Groundwater Recharge**~~

~~An assessment of potential impacts the proposal will have on underlying groundwater aquifers. The appropriate information shall be determined through consultation with the Department on a case by case basis.~~

### ~~4.5 Dual Plumbed Use Areas~~

~~In accordance with Sections 60313 through 60316 of the Water Recycling Criteria.~~

### ~~4.6 Other Industrial Uses~~

~~The appropriate information shall be determined on a case by case basis.~~

### ~~4.7 Use Area Design~~

~~The report should discuss how domestic water distribution system shall be protected from the recycled water in accordance with the Regulations Relating to Cross Connections and the California Waterworks Standards, and how the facilities will be designed to minimize the chance of recycled water leaving the designated use area. Any proposed deviation from the Water Recycling Criteria and necessity therefore, should be discussed in the report.~~

### ~~4.8 Use Area Inspections and Monitoring~~

~~The report should describe the use area inspection program. It should identify the locations at the use area where problems are most likely to occur (e.g. ponding, runoff, overspray, cross-connections, etc.) and the personnel in charge of the monitoring and reporting of use area problems.~~

### ~~4.9 Employee Training~~

~~The report should describe the training which use area employees will receive to ensure compliance with the Recycled Water Criteria, and identify the entity that will provide the training and its' frequency. The report should also identify any written manuals of practice to be made available to employees.~~