CALIFORNIA REGIONAL WATER QUALITY CONTROL BOARD
CENTRAL VALLEY REGION

ORDER NO. R5-2009-XXXX

AMENDING WASTE DISCHARGE REQUIREMENTS
ORDER NO. R5-2007-0031 (NPDES PERMIT NO. CA0085201)

CITY OF ANGELS
CITY OF ANGELS WASTEWATER TREATMENT PLANT
CALAVERAS COUNTY

T E N T A T I V E (03 APRIL 2009)

The California Regional Water Quality Control Board, Central Valley Region, (hereafter Regional Water Board) finds that:

1. On 3 May 2007, the Regional Water Board adopted Waste Discharge Requirements Order No. R5-2007-0031, prescribing waste discharge requirements for the City of Angels Wastewater Treatment Plant, Calaveras County. For the purposes of this Order, the City of Angels is hereafter referred to as "Discharger" and the City of Angels Wastewater Treatment Plant is hereafter referred to as "Facility."

2. The Facility provides biological secondary treatment and tertiary filtration. Disposal of treated wastewater to land is maximized via spray irrigation of about 61 acres of pastureland and irrigation of 110 acres on the Greenhorn Creek Golf Course. Wastewater flows exceeding the land disposal and storage capacity of the Facility are proposed to be discharged seasonally to Angels Creek. Angels Creek is a water of the United States, and a tributary to the Stanislaus River within the Stanislaus River watershed.

3. Order No. R5-2007-0031 includes Discharge Prohibition III.E., which prohibits the discharge unless there is at least a 20:1 flow ratio (Angels Creek: effluent) for the discharge. Although a 20:1 flow ratio was required, there was insufficient information at the time Order No. R5-2007-0031 was adopted to allow dilution credits. Therefore, Reopener Provision VI.C.1.f. was included in Order No. R5-2007-0031 to allow the permit to be reopened should the Discharger provide sufficient information to allow dilution credits, and states as follows:

   "f. **Mixing Zone Study**. Section 1.4.2.2 of the SIP requires the Discharger to submit receiving water mixing zone studies prior to allowing dilution credits for certain pollutants. Therefore, the Discharger may elect, as a means of compliance, to conduct a mixing zone study to evaluate any available assimilative capacity in Angels Creek. When requested, the Regional Water Board will review such studies and if warranted, may reopen this permit to make appropriate changes to the effluent limitations."

4. The Discharger conducted a mixing zone study and submitted a report dated 28 May 2008, that demonstrates the discharge is completely-mixed as defined by the *Policy for Implementation of Toxics Standards for Inland Surface Waters, Enclosed Bays, and Estuaries of California* (SIP). For completely-mixed discharges, the SIP states that, "…the amount of receiving water available to dilute the effluent shall be determined by calculating the dilution ratio (i.e., the critical receiving water flow divided by the effluent flow)…"

5. Order No. R5-2007-0031 may be reopened and modified in accordance with 40 CFR 122.62(a)(7) due to the permit containing a reopener provision. Furthermore, the submission of a mixing zone study constitutes "new information", which meets the requirements in 40 CFR 122.62(a)(2) for modification of a NPDES permit.

6. This Order amends Order No. R5-2007-0031 by allowing dilution credits for compliance with human health and aquatic toxicity criteria. A dilution credit of 19 has been allowed for compliance with human health criteria and acute and chronic aquatic toxicity criteria. The allowance of dilution credits results in changes to the water quality-based effluent limitations for ammonia, bis(2-chloroethyl)ether, dichlorobromomethane, copper, lead, and zinc, and the numeric whole effluent toxicity monitoring trigger. Other associated changes are made throughout the permit and fact sheet, due to the allowance of dilution credits.

7. Issuance of this Order is exempt from the provisions of the California Environmental Quality Act (Public Resources Code section 21000, et seq.), in accordance with CWC section 15321 (a)(2), Title 14, of the California Code of Regulations.

8. The Regional Water Board has notified the Discharger and interested agencies and persons of its intent to amend Waste Discharge Requirements and the Monitoring Program Requirements for this discharge and has provided them with an opportunity to submit their written views and recommendations.

9. Any person adversely affected by this action of the Board may petition the State Water Resources Control Board to review this action. The petition must be received by the State Water Resources Control Board, Office of the Chief Counsel, P.O. Box 100, Sacramento, CA 95812-0100, within 30 days of the date on which this action was taken. Copies of the law and regulations applicable to filing petitions will be provided on request.

IT IS HEREBY ORDERED THAT:

Waste Discharge Requirements Order No. R5-2007-0031 (NPDES No. CA0085201) is amended as shown in underline/strikeout format in Attachment 1 to this Order.

I, PAMELA C. CREEDON, Executive Officer, do hereby certify the foregoing is a full, true, and correct copy of an Order adopted by the California Regional Water Quality Control Board, Central Valley Region, on **11/12 June 2009**.

_____
PAMELA C, CREEDON, Executive Officer

TENTATIVE (03 APRIL 2009)

ATTACHMENT 1

CALIFORNIA REGIONAL WATER QUALITY CONTROL BOARD

CENTRAL VALLEY REGION

11020 Sun Center Drive #200, Rancho Cordova, California 95670-6114
Phone (916) 464-3291 • FAX (916) 464-4645
http://www.waterboards.ca.gov/centralvalley

ORDER NO. R5-2007-0031-01
(as amended by Order No. R5-2009-XXXX)
NPDES NO. CA0085201

WASTE DISCHARGE REQUIREMENTS FOR THE CITY OF ANGELS CITY OF ANGELS WASTEWATER TREATMENT PLANT CALAVERAS COUNTY

The following Discharger is subject to waste discharge requirements as set forth in this Order:

Table 1. Discharger Information

Discharger	City of Angels
Name of Facility	City of Angels Wastewater Treatment Plant
Facility Address	3000 Centennial Road
	Angels, CA 95222
	Calaveras County
The U.S. Environmental Protection Agency (USEPA) and the Regional Water Quality Control Board have classified this discharge as a minor discharge.	

The discharge by the City of Angels from the discharge points identified below is subject to waste discharge requirements as set forth in this Order:

Table 2. Discharge Location

Discharge Point	Effluent Description	Discharge Point Latitude	Discharge Point Longitude	Receiving Water
001	Tertiary Effluent	38° 03' 26" N	120° 32' 13" W	Angels Creek

Table 3. Administrative Information

This Order was adopted by the Regional Water Quality Control Board on:	**May 3, 2007**
This Order shall become effective on:	**June 22, 2007**
This Order shall expire on:	**May 1, 2012**
The Discharger shall file a Report of Waste Discharge in accordance with title 23, California Code of Regulations, as application for issuance of new waste discharge requirements no later than:	**180 days prior to expiration date**

IT IS HEREBY ORDERED, that in order to meet the provisions contained in division 7 of the Water Code (commencing with section 13000) and regulations adopted thereunder and the provisions of the federal Clean Water Act (CWA) and regulations and guidelines adopted thereunder, the Discharger shall comply with the requirements in this Order.

I, PAMELA C. CREEDON, Executive Officer, do hereby certify that this Order with all attachments is a full, true, and correct copy of an Order adopted by the California Regional Water Quality Control Board, Central Valley Region, on May 3, 2007.

PAMELA C. CREEDON, Executive Officer

Table of Contents

I. Facility Information 1
II. Findings 1
III. Discharge Prohibitions 7
IV. Effluent Limitations and Discharge Specifications 8
A. Effluent Limitations – Discharge To Angels Creek 8
B. Land Discharge Specifications (Not Applicable) 9
C. Reclamation Specifications (Not Applicable) 9
V. Receiving Water Limitations 9
A. Surface Water Limitations 9
B. Groundwater Limitations (Not Applicable) 11
VI. Provisions 11
A. Standard Provisions 11
B. Monitoring and Reporting Program (MRP) Requirements 16
C. Special Provisions 16
1. Reopener Provisions 16
2. Special Studies, Technical Reports and Additional Monitoring Requirements 17
3. Best Management Practices and Pollution Prevention 19
4. Construction, Operation and Maintenance Specifications 20
5. Special Provisions for Municipal Facilities (POTWs Only) 20
6. Other Special Provisions 21
7. Compliance Schedules 22
VII. Compliance Determination 22

List of Tables

Table 1. Discharger Information ..... Cover
Table 2. Discharge Location ..... Cover
Table 3. Administrative Information ..... Cover
Table 4. Facility Information 1
Table 5. Basin Plan Beneficial Uses 4
Table 6. Effluent Limitations 8

List of Attachments

Attachment A – Definitions A-1
Attachment B – Map B-1
Attachment C – Flow Schematic C-1
Attachment D – Standard Provisions D-1
Attachment E – Monitoring and Reporting Program (MRP) E-1
Attachment F – Fact Sheet F-1

I. FACILITY INFORMATION

The following Discharger is subject to waste discharge requirements as set forth in this Order:

Table 4. Facility Information

Discharger	City of Angels
Name of Facility	City of Angels Wastewater Treatment Plant
Facility Address	3000 Centennial Road
	Angels, CA 95222
	Calaveras County
Facility Contact, Title, and Phone	Gary S. Ghio, City Engineer, (209)-754-1824
Mailing Address	584 S. Main Street, P.O. Box 667 Angels, CA 95222
Type of Facility	Publicly Owned Treatment Works
Facility Design Flow	1.9 million gallons per day (mgd)

II. FINDINGS

The California Regional Water Quality Control Board, Central Valley Region (hereinafter Regional Water Board), finds:

A. Background. City of Angels (hereinafter Discharger) submitted a Report of Waste Discharge, dated February 2, 2006, and applied for a National Pollutant Discharge Elimination System (NPDES) permit authorization to discharge up to 1.9 mgd of tertiary treated wastewater from the City of Angels Wastewater Treatment Plant, hereinafter Facility. The application was deemed complete on January 9, 2007.

For the purposes of this Order, references to the "discharger" or "permittee" in applicable federal and state laws, regulations, plans, or policy are held to be equivalent to references to the Discharger herein.

After adoption of Order No. R5-2007-0031, the Discharger submitted a mixing zone study and requested the permit be re-opened, pursuant to re-opener provision VI.C.1.f, to allow dilution credits for certain constituents. On X June 2009, the Regional Water Board adopted Order No. 2009-XXXX amending Order No. R5-2007-0031. Where there is a need to differentiate between the originally adopted Order and the revised Order, the originally adopted Order shall be hereafter referred to as "Order No. R5-2007-0031" and the Order as amended shall be referred to as "Order No. R5-2007-0031-01."

B. Facility Description. The Discharger owns and operates a publicly owned wastewater reclamation facility. The treatment system provides influent flow equalization, mechanical screening, grit removal, biological treatment with nitrification/denitrification, chemical addition, flocculation, sand filtration, sedimentation and disinfection. Sludge is anaerobically digested and then dewatered in sludge drying beds. Disposal of the

treated wastewater to land is maximized via spray irrigation of about 61 acres of pastureland and irrigation of 110 acres on the Greenhorn Creek Golf Course. Wastewater flows exceeding the land disposal and storage capacity of the Facility are proposed to be discharged seasonally to Angels Creek at Discharge Point 001 (see table on cover page). Angels Creek is a water of the United States, and a tributary to the Stanislaus River within the Stanislaus River watershed. Attachment B provides a map of the area around the Facility. Attachment C provides a flow schematic of the Facility.

C. Legal Authorities. This Order is issued pursuant to section 402 of the federal Clean Water Act (CWA) and implementing regulations adopted by the U.S. Environmental Protection Agency (USEPA) and chapter 5.5, division 7 of the California Water Code (commencing with section 13370). It shall serve as a NPDES permit for point source discharges from this facility to surface waters. This Order also serves as Waste Discharge Requirements (WDRs) pursuant to article 4, chapter 4, Division 7 of the Water Code (commencing with section 13260).

D. Background and Rationale for Requirements. The Regional Water Board developed the requirements in this Order based on information submitted as part of the application, through monitoring and reporting programs, and other available information. The Fact Sheet (Attachment F), which contains background information and rationale for Order requirements, is hereby incorporated into this Order and constitutes part of the Findings for this Order. Attachments A through E are also incorporated into this Order.

E. California Environmental Quality Act (CEQA). The Regional Water Board determined that the proposed discharge to surface water, which may potentially reduce water quality has been adequately subjected to the environmental analyses in a mitigated negative declaration required under the California Environmental Quality Act (Public Resources Code section 21000 et seq) and considered the mitigated negative declaration in preparing this Order. Further, this action to adopt an NPDES permit is exempt from the provisions of CEQA in accordance with section 13389 of the CWC.

F. Technology-based Effluent Limitations. Section 301(b) of the CWA and implementing USEPA permit regulations at section 122.44, title 40 of the Code of Federal Regulations (CFR)[1] require that permits include conditions meeting applicable technology-based requirements at a minimum, and any more stringent effluent limitations necessary to meet applicable water quality standards. The discharge .authorized by this Order must meet minimum federal technology-based requirements based on Secondary Treatment Standards at Part 133 and Best Professional Judgment (BPJ) in accordance with Part 125, section 125.3. A detailed discussion of the technology-based effluent limitations development is included in the Fact Sheet (Attachment F).

G. Water Quality-based Effluent Limitations. Section 301(b) of the CWA and section 122.44(d) require that permits include limitations more stringent than applicable federal

[1] All further statutory references are to title 40 of the Code of Federal Regulations unless otherwise indicated.

technology-based requirements where necessary to achieve applicable water quality standards. This Order contains requirements, expressed as a technology equivalence requirement, more stringent than secondary treatment requirements that are necessary to meet applicable water quality standards. The Regional Water Board has considered the factors listed in CWC Section 13241 in establishing these requirements. The rationale for these requirements, which consist of tertiary treatment or equivalent requirements, is discussed in the Fact Sheet.

Section 122.44(d)(1)(i) mandates that permits include effluent limitations for all pollutants that are or may be discharged at levels that have the reasonable potential to cause or contribute to an exceedance of a water quality standard, including numeric and narrative objectives within a standard. Where reasonable potential has been established for a pollutant, but there is no numeric criterion or objective for the pollutant, water quality-based effluent limitations (WQBELs) must be established using: (1) EPA criteria guidance under CWA section 304(a), supplemented where necessary by other relevant information; (2) an indicator parameter for the pollutant of concern; or (3) a calculated numeric water quality criterion, such as a proposed State criterion or policy interpreting the State's narrative criterion, supplemented with other relevant information, as provided in 40 CFR section 122.44(d)(1)(vi).

H. Water Quality Control Plans. The Regional Water Board adopted a *Water Quality Control Plan, Fourth Edition (Revised September 2004), for the Sacramento and San Joaquin River Basins* (hereinafter Basin Plan) that designates beneficial uses, establishes water quality objectives, and contains implementation programs and policies to achieve those objectives for all waters addressed through the plan. The Basin Plan at page II-2.00 states that the "…*beneficial uses of any specifically identified water body generally apply to its tributary streams*." The Basin Plan does not specifically identify beneficial uses for *Angels Creek,* but does identify present and potential uses for the Stanislaus River, to which *Angels Creek* is tributary. These beneficial uses are as follows: municipal and domestic supply; agricultural supply, including stock watering; hydropower generation; water contact recreation, including canoeing and rafting; non-contact water recreation, including aesthetic enjoyment; commercial and sport fishing; aquaculture; warm freshwater habitat; cold freshwater habitat; and wildlife habitat.

In addition, the Basin Plan implements State Water Resources Control Board (State Water Board) Resolution No. 88-63, which established state policy that all waters, with certain exceptions, should be considered suitable or potentially suitable for municipal or domestic supply. Thus, as discussed in detail in the Fact Sheet, beneficial uses applicable to Angels Creek are as follows:

Table 5. Basin Plan Beneficial Uses

Discharge Point	Receiving Water Name	Beneficial Use(s)
001	Angels Creek	municipal and domestic supply (MUN); agricultural supply, including stock watering (AGR); hydropower generation; water contact recreation, including canoeing and rafting (REC-1); non-contact water recreation, including aesthetic enjoyment (REC-2); commercial and sport fishing; aquaculture; warm freshwater habitat; cold freshwater habitat; and wildlife habitat.

I. **National Toxics Rule (NTR) and California Toxics Rule (CTR).** USEPA adopted the NTR on December 22, 1992, and later amended it on May 4, 1995 and November 9, 1999. About forty criteria in the NTR applied in California. On May 18, 2000, USEPA adopted the CTR. The CTR promulgated new toxics criteria for California and, in addition, incorporated the previously adopted NTR criteria that were applicable in the state. The CTR was amended on February 13, 2001. These rules contain water quality criteria for priority pollutants.

J. **State Implementation Policy.** On March 2, 2000, the State Water Board adopted the *Policy for Implementation of Toxics Standards for Inland Surface Waters, Enclosed Bays, and Estuaries of California* (State Implementation Policy or SIP). The SIP became effective on April 28, 2000 with respect to the priority pollutant criteria promulgated for California by the USEPA through the NTR and to the priority pollutant objectives established by the Regional Water Board in the Basin Plan. The SIP became effective on May 18, 2000 with respect to the priority pollutant criteria promulgated by the USEPA through the CTR. The State Water Board adopted amendments to the SIP on February 24, 2005 that became effective on July 13, 2005. The SIP establishes implementation provisions for priority pollutant criteria and objectives and provisions for chronic toxicity control. Requirements of this Order implement the SIP.

K. **Compliance Schedules and Interim Requirements.** In general, an NPDES permit must include final effluent limitations that are consistent with Clean Water Act section 301 and with 40 CFR 122.44(d). There are exceptions to this general rule. The State Water Board has concluded that where the Regional Water Board's Basin Plan allows for schedules of compliance and the Regional Water Board is newly interpreting a narrative standard, it may include schedules of compliance in the permit to meet effluent limits that implement a narrative standard. See In the Matter of Waste Discharge Requirements for Avon Refinery (State Board Order WQ 2001-06 at pp. 53-55). See also Communities for a Better Environment et al. v. State Water Resources Control Board, 34 Cal.Rptr.3d 396, 410 (2005). The Basin Plan for the Sacramento and San Joaquin Rivers includes a provision that authorizes the use of compliance schedules in NPDES permits for water quality objectives that are adopted after the date of adoption of the Basin Plan, which was September 25, 1995 (See Basin Plan at page IV-16). Consistent with the State Water Board's Order in the CBE matter, the Regional Water Board has the discretion to include compliance schedules in NPDES permits when it is including an effluent limitation that is a "new interpretation" of a narrative water quality objective. This conclusion is also consistent with the United States Environmental

Protection Agency policies and administrative decisions. See, e.g., Whole Effluent Toxicity (WET) Control Policy. The Regional Water Board, however, is not required to include a schedule of compliance, but may issue a Time Schedule Order pursuant to Water Code section 13300 or a Cease and Desist Order pursuant to Water Code section 13301 where it finds that the discharger is violating or threatening to violate the permit. The Regional Water Board will consider the merits of each case in determining whether it is appropriate to include a compliance schedule in a permit, and, consistent with the Basin Plan, should consider feasibility of achieving compliance, and must impose a schedule that is as short as practicable to achieve compliance with the objectives, criteria, or effluent limit based on the objective or criteria.
For CTR constituents, Section 2.1 of the SIP provides that, based on a Discharger's request and demonstration that it is infeasible for an existing Discharger to achieve immediate compliance with an effluent limitation derived from a CTR criterion, compliance schedules may be allowed in an NPDES permit. Unless an exception has been granted under section 5.3 of the SIP, a compliance schedule may not exceed 5 years from the date that the permit is issued or reissued, nor may it extend beyond 10 years from the effective date of the SIP (or May 18, 2010) to establish and comply with CTR criterion-based effluent limitations. Where a compliance schedule for a final effluent limitation that exceeds 1 year, the Order must include interim numeric limitations for that constituent or parameter. Where allowed by the Basin Plan, compliance schedules and interim effluent limitations or discharge specifications may also be granted to allow time to implement a new or revised water quality objective. However, this Order being a new NPDES for a new discharge to surface waters, compliance schedules and interim effluent limitations are not allowed in this permit.

L. Alaska Rule. On March 30, 2000, USEPA revised its regulation that specifies when new and revised state and tribal water quality standards (WQS) become effective for CWA purposes. (40 C.F.R. § 131.21; 65 Fed. Reg. 24641 (April 27, 2000).) Under the revised regulation (also known as the Alaska rule), new and revised standards submitted to USEPA after May 30, 2000, must be approved by USEPA before being used for CWA purposes. The final rule also provides that standards already in effect and submitted to USEPA by May 30, 2000 may be used for CWA purposes, whether or not approved by USEPA.

M. Stringency of Requirements for Individual Pollutants. This Order contains both technology-based and water quality-based effluent limitations for individual pollutants. The technology-based effluent limitations consist of restrictions on BOD_5 and TSS. The water quality-based effluent limitations consist of restrictions on turbidity and pathogens. This Order's technology-based pollutant restrictions implement the minimum, applicable federal technology-based requirements. In addition, this Order contains effluent limitations more stringent than the minimum, federal technology-based requirements that are necessary to meet water quality standards. These limitations are more stringent than required by the CWA. Specifically, this Order includes effluent limitations for BOD, TSS, turbidity and pathogens that are more stringent than applicable federal standards, but that are nonetheless necessary to meet numeric objectives or protect beneficial uses. The rationale for including these limitations is explained in the Fact Sheet. In addition, the Regional Water Board has considered the factors in Water Code

section 13241 in establishing these requirements.

Water quality-based effluent limitations have been scientifically derived to implement water quality objectives that protect beneficial uses. Both the beneficial uses and the water quality objectives have been approved pursuant to federal law and are the applicable federal water quality standards. To the extent that toxic pollutant water quality-based effluent limitations were derived from the CTR, the CTR is the applicable standard pursuant to 40 CFR section 131.38. The scientific procedures for calculating the individual water quality-based effluent limitations are based on the CTR-SIP, which was approved by USEPA on May 1, 2001. All beneficial uses and water quality objectives contained in the Basin Plan were approved under state law and submitted to and approved by USEPA prior to May 30, 2000. Any water quality objectives and beneficial uses submitted to USEPA prior to May 30, 2000, but not approved by USEPA before that date, are nonetheless "*applicable water quality standards for purposes of the [Clean Water] Act*" pursuant to 40 CFR section 131.21(c)(1). Collectively, this Order's restrictions on individual pollutants are no more stringent than required to implement the technology-based requirements of the CWA and the applicable water quality standards for purposes of the CWA.

N. Antidegradation Policy. Section 131.12 requires that the state water quality standards include an antidegradation policy consistent with the federal policy. The State Water Board established California's antidegradation policy in State Water Board Resolution No. 68-16. Resolution No. 68-16 is consistent with the federal antidegradation policy where the federal policy applies under federal law. Resolution No. 68-16 requires that existing quality of waters be maintained unless degradation is justified based on specific findings. The Regional Water Board's Basin Plan implements, and incorporates by reference, both the state and federal antidegradation policies. As discussed in detail in the Fact Sheet the permitted discharge is consistent with the antidegradation provision of section 131.12 and State Water Board Resolution No. 68-16.

O. Anti-Backsliding Requirements. Sections 402(o)(2) and 303(d)(4) of the CWA and federal regulations at title 40, Code of Federal Regulations section 122.44(l) prohibit backsliding in NPDES permits. These anti-backsliding provisions require effluent limitations in a reissued permit to be as stringent as those in the previous permit, with some exceptions where limitations may be relaxed. However, this Order being a new NPDES for a new discharge, the anti-backsliding requirements do not apply to this permit.

P. Monitoring and Reporting. Section 122.48 requires that all NPDES permits specify requirements for recording and reporting monitoring results. Water Code sections 13267 and 13383 authorizes the Regional Water Board to require technical and monitoring reports. The Monitoring and Reporting Program establishes monitoring and reporting requirements to implement federal and State requirements. This Monitoring and Reporting Program is provided in Attachment E.

Q. Standard and Special Provisions. Standard Provisions, which apply to all NPDES permits in accordance with section 122.41, and additional conditions applicable to

specified categories of permits in accordance with section 122.42, are provided in Attachment D. The discharger must comply with all standard provisions and with those additional conditions that are applicable under section 122.42. The Regional Water Board has also included in this Order special provisions applicable to the Discharger. A rationale for the special provisions contained in this Order is provided in the attached Fact Sheet.

R. Provisions and Requirements Implementing State Law. The provisions and/or requirements in subsections IV.B, IV.C, V.B, and VI.C. of this Order are included to implement state law only. These provisions/requirements are not required or authorized under the federal CWA; consequently, violations of these provisions/requirements are not subject to the enforcement remedies that are available for NPDES violations.

S. Notification of Interested Parties. The Regional Water Board has notified the Discharger and interested agencies and persons of its intent to prescribe Waste Discharge Requirements for the discharge and has provided them with an opportunity to submit their written comments and recommendations. Details of notification are provided in the Fact Sheet of this Order.

T. Consideration of Public Comment. The Regional Water Board, in a public meeting, heard and considered all comments pertaining to the discharge. Details of the Public Hearing are provided in the Fact Sheet of this Order.

III. DISCHARGE PROHIBITIONS

A. Discharge of wastewater at a location or in a manner different from that described in the Findings is prohibited.

B. The by-pass or overflow of wastes to surface waters is prohibited, except as allowed by Federal Standard Provisions I.G. and I.H. (Attachment D).

C. Neither the discharge nor its treatment shall create a nuisance as defined in Section 13050 of the California Water Code.

D. The Discharger shall not allow pollutant-free wastewater to be discharged into the collection, treatment, and disposal system in amounts that significantly diminish the system's capability to comply with this Order. Pollutant-free wastewater means rainfall, groundwater, cooling waters, and condensates that are essentially free of pollutants.

E. The discharge of tertiary treated wastewater at Discharge Point - 001 is prohibited except from November 15 through May 15, when Angels Creek flows provide a downstream flow ratio greater than or equal to 20:1 (Angels Creek flow : effluent) as a daily average.

F. The discharge of tertiary treated wastewater at Discharge Point – 001 is prohibited when the storage reservoir has more than 20 MG of unused effluent storage capacity.

G. Initiation of discharge to Angels Creek is prohibited until the Discharger complies with Section VI.C.4.b.

IV. EFFLUENT LIMITATIONS AND DISCHARGE SPECIFICATIONS

A. Effluent Limitations – Discharge To Angels Creek

1. Final Effluent Limitations: Discharge Point - 001

The Discharger shall maintain compliance with the following effluent limitations with compliance measured at monitoring location EFF-001 as described in the attached MRP.

a. The Discharger shall maintain compliance with the effluent limitations specified in Table 6:

Table 6. Effluent Limitations

Parameter	Units	Effluent Limitations				
		Average Monthly	Average Weekly	Maximum Daily	Instantaneous Minimum	Instantaneous Maximum
BOD 5-day @ 20°C	mg/L	10	15	20	--	--
	lbs/day[1]	158	238	317	--	--
Total Suspended Solids	mg/L	10	15	20	--	--
	lbs/day[1]	158	238	317	--	--
Electrical Conductivity @ 25ºC	µmhos/cm	510	--	--	--	--
pH	Stand. units	--	--		6.5	8.0
Chlorine Residual	mg/l	0.01	--	0.02	--	--
Settleable Solids	ml/l	0.1	--	0.2	--	--
Ammonia (Total)	mg/l	~~2.8~~21	--	~~5.6~~56	--	--
	lbs/day[1]	~~44~~333	--	~~89~~887	--	--
Bis(2-chloroethyl)ether	µg/L	0.43~~1~~	--	0.86~~2~~	--	--
Nitrate	mg/l	10				
	lbs/day[1]	158				
Nitrite	mg/l	1				
	lbs/day[1]	15.9				
Dichlorobromomethane	µg/L	~~0.56~~7.4	--	~~1.1~~15	--	--
Copper	µg/L	~~2.2~~16	--	~~4.3~~32	--	--
Lead	µg/L	~~0.51~~2.5	--	~~1.0~~5.0	--	--
Zinc	µg/L	~~20~~250	--	~~41~~500	--	--

1 Based on a design flow of 1.9 million gallons per day

b. **Percent Removal:** The average monthly percent removal of BOD 5-day 20°C and total suspended solids shall not be less than 85 percent.

c. **Acute Whole Effluent Toxicity.** Survival of aquatic organisms in 96-hour bioassays of undiluted waste shall be no less than:

   i. 70%, minimum for any one bioassay; and
   ii. 90%, median for any three consecutive bioassays.

d. **Turbidity.** Effluent turbidity shall not exceed:

   i. 2 NTU, as a daily average; and
   ii. 5 NTU, more than 5% of the time within a 24-hour period; and
   iii. 10 NTU at any time

e. **Total Coliform Organisms.** Effluent total coliform organisms shall not exceed:

   i. 2.2 most probable number (MPN) per 100 mL, as a 7-day median;
   ii. 23 MPN/100 mL, more than once in any 30-day period; and
   iii. 240 MPN/100ml at any time.

f. **Average Daily Discharge Flow.** The Average Daily Discharge Flow shall not exceed 1.9 mgd.

2. Interim Effluent Limitations

(Not Applicable)

B. Land Discharge Specifications (Set forth in WDR Order No. 98-110)

C. Reclamation Specifications (Set forth in WDR Order No. 98-098 & 98-110)

V. RECEIVING WATER LIMITATIONS

A. Surface Water Limitations

Receiving water limitations are based on water quality objectives contained in the Basin Plan and are a required part of this Order. The discharge shall not cause the following in Angels Creek:

1. **Un-ionized Ammonia**. Un-ionized ammonia to be present in amounts that adversely affect beneficial uses.

2. **Bacteria**. The fecal coliform concentration, based on a minimum of not less than five samples for any 30-day period, to exceed a geometric mean of 23 MPN/100 mL, nor more than ten percent of the total number of fecal coliform samples taken during any 30-day period to exceed 240 MPN/100 mL.

3. **Biostimulatory Substances**. Water to contain biostimulatory substances which promote aquatic growths in concentrations that cause nuisance or adversely affect

beneficial uses.

4. **Chemical Constituents**. Chemical constituents to be present in concentrations that adversely affect beneficial uses.

5. **Color**. Discoloration that causes nuisance or adversely affects beneficial uses.

6. **Dissolved Oxygen**:

   a. The monthly median of the mean daily dissolved oxygen concentration to fall below 85 percent of saturation in the main water mass;
   b. The 95 percentile dissolved oxygen concentration to fall below 75 percent of saturation; nor
   c. The dissolved oxygen concentration to be reduced below 7.0 mg/L at any time.

7. **Floating Material**. Floating material to be present in amounts that cause nuisance or adversely affect beneficial uses.

8. **Oil and Grease**. Oils, greases, waxes, or other materials to be present in concentrations that cause nuisance, result in a visible film or coating on the surface of the water or on objects in the water, or otherwise adversely affect beneficial uses.

9. **pH**. The pH to be depressed below 6.5 raised above 8.5**,** nor changed by more than 0.5. A one-month averaging period may be applied when calculating the pH change of 0.5.

10. **Pesticides**:

    a. Pesticides to be present, individually or in combination, in concentrations that adversely affect beneficial uses;
    b. Pesticides to be present in bottom sediments or aquatic life in concentrations that adversely affect beneficial uses;
    c. Total identifiable persistent chlorinated hydrocarbon pesticides to be present in the water column at concentrations detectable within the accuracy of analytical methods approved by USEPA or the Executive Officer.
    d. Pesticide concentrations to exceed those allowable by applicable antidegradation policies (see State Water Board Resolution No. 68-16 and 40 CFR §131.12.).
    e. Pesticide concentrations to exceed the lowest levels technically and economically achievable.
    f. Pesticides to be present in concentration in excess of the maximum contaminant levels set forth in California Code of Regulations, Title 22, Division 4, Chapter 15; nor
    g. Thiobencarb to be present in excess of 1.0 µg/L.

11. **Radioactivity**:

a. Radionuclides to be present in concentrations that are harmful to human, plant, animal, or aquatic life nor that result in the accumulation of radionuclides in the food web to an extent that presents a hazard to human, plant, animal, or aquatic life.
b. Radionuclides to be present in excess of the maximum contaminant levels specified in Table 4 (MCL Radioactivity) of Section 64443 of Title 22 of the California Code of Regulations.

12. **Suspended Sediments**. The suspended sediment load and suspended sediment discharge rate of surface waters to be altered in such a manner as to cause nuisance or adversely affect beneficial uses.

13. **Settleable Substances**. Substances to be present in concentrations that result in the deposition of material that causes nuisance or adversely affects beneficial uses.

14. **Suspended Material**. Suspended material to be present in concentrations that cause nuisance or adversely affect beneficial uses.

15. **Taste and Odors**. Taste- or odor-producing substances to be present in concentrations that impart undesirable tastes or odors to fish flesh or other edible products of aquatic origin, or that cause nuisance, or otherwise adversely affect beneficial uses of receiving water**.**

16. **Temperature**. The natural temperature to be increased by more than 5°F.

17. **Toxicity**. Toxic substances to be present, individually or in combination, in concentrations that produce detrimental physiological responses in human, plant, animal, or aquatic life.

18. **Turbidity**. The turbidity to increase as follows:

    a. More than 1 Nephelometric Turbidity Unit (NTU) where natural turbidity is between 0 and 5 NTUs.
    b. More than 20 percent where natural turbidity is between 5 and 50 NTUs.
    c. More than 10 NTU where natural turbidity is between 50 and 100 NTUs.
    d. More than 10 percent where natural turbidity is greater than 100 NTUs.

    In determining compliance with the above limits, a one-month averaging period may be used when determining compliance with this Receiving Surface Water Limitation for turbidity**.**

B. Groundwater Limitations (Set forth in WDR Order No. 98-110)

VI. PROVISIONS

A. Standard Provisions

1. The Discharger shall comply with all Standard Provisions included in Attachment D of this Order.

2. The Discharger shall comply with the following provisions:

   a. If the Discharger's wastewater treatment plant is publicly owned or subject to regulation by California Public Utilities Commission, it shall be supervised and operated by persons possessing certificates of appropriate grade according to Title 23, CCR, Division 3, Chapter 26.

   b. After notice and opportunity for a hearing, this Order may be terminated or modified for cause, including, but not limited to:

      i. violation of any term or condition contained in this Order;

      ii. obtaining this Order by misrepresentation or by failing to disclose fully all relevant facts;

      iii. a change in any condition that requires either a temporary or permanent reduction or elimination of the authorized discharge; and

      iv. a material change in the character, location, or volume of discharge.

      The causes for modification include:

      i. New regulations. New regulations have been promulgated under Section 405(d) of the Clean Water Act, or the standards or regulations on which the permit was based have been changed by promulgation of amended standards or regulations or by judicial decision after the permit was issued.

      ii. Land application plans. When required by a permit condition to incorporate a land application plan for beneficial reuse of sewage sludge, to revise an existing land application plan, or to add a land application plan.

      iii. Change in sludge use or disposal practice. Under 40 Code of Federal Regulations (CFR) 122.62(a)(1), a change in the Discharger's sludge use or disposal practice is a cause for modification of the permit. It is cause for revocation and reissuance if the Discharger requests or agrees.

      The Regional Water Board may review and revise this Order at any time upon application of any affected person or the Regional Water Board's own motion.

   c. If a toxic effluent standard or prohibition (including any scheduled compliance specified in such effluent standard or prohibition) is established under Section 307(a) of the CWA, or amendments thereto, for a toxic pollutant that is present in the discharge authorized herein, and such standard or prohibition is more stringent than any limitation upon such pollutant in this Order, the Regional Water

Board will revise or modify this Order in accordance with such toxic effluent standard or prohibition.

The Discharger shall comply with effluent standards and prohibitions within the time provided in the regulations that establish those standards or prohibitions, even if this Order has not yet been modified.

d. This Order shall be modified, or alternately revoked and reissued, to comply with any applicable effluent standard or limitation issued or approved under Sections 301(b)(2)(C) and (D), 304(b)(2), and 307(a)(2) of the CWA, if the effluent standard or limitation so issued or approved:

   i. contains different conditions or is otherwise more stringent than any effluent limitation in the Order; or

   ii. controls any pollutant limited in the Order.

   The Order, as modified or reissued under this paragraph, shall also contain any other requirements of the CWA then applicable.

e. The provisions of this Order are severable. If any provision of this Order is found invalid, the remainder of this Order shall not be affected.

f. The Discharger shall take all reasonable steps to minimize any adverse effects to waters of the State or users of those waters resulting from any discharge or sludge use or disposal in violation of this Order. Reasonable steps shall include such accelerated or additional monitoring as necessary to determine the nature and impact of the non-complying discharge or sludge use or disposal.

g. The Discharger shall ensure compliance with any existing or future pretreatment standard promulgated by USEPA under Section 307 of the CWA, or amendment thereto, for any discharge to the municipal system.

h. The discharge of any radiological, chemical or biological warfare agent or high-level, radiological waste is prohibited.

i. A copy of this Order shall be maintained at the discharge facility and be available at all times to operating personnel. Key operating personnel shall be familiar with its content.

j. Safeguard to electric power failure:

   i. The Discharger shall provide safeguards to assure that, should there be reduction, loss, or failure of electric power, the discharge shall comply with the terms and conditions of this Order.

   ii. Upon written request by the Regional Water Board the Discharger shall submit a written description of safeguards. Such safeguards may include alternate power sources, standby generators, retention capacity, operating

procedures, or other means. A description of the safeguards provided shall include an analysis of the frequency, duration, and impact of power failures experienced over the past five years on effluent quality and on the capability of the Discharger to comply with the terms and conditions of the Order. The adequacy of the safeguards is subject to the approval of the Regional Water Board.

iii. Should the treatment works not include safeguards against reduction, loss, or failure of electric power, or should the Regional Water Board not approve the existing safeguards, the Discharger shall, within ninety days of having been advised in writing by the Regional Water Board that the existing safeguards are inadequate, provide to the Regional Water Board and USEPA a schedule of compliance for providing safeguards such that in the event of reduction, loss, or failure of electric power, the Discharger shall comply with the terms and conditions of this Order. The schedule of compliance shall, upon approval of the Regional Water Board, become a condition of this Order.

k. The Discharger, upon written request of the Regional Water Board, shall file with the Board a technical report on its preventive (failsafe) and contingency (cleanup) plans for controlling accidental discharges, and for minimizing the effect of such events. This report may be combined with that required under Regional Water Board Standard Provision VI.A.2.m.

The technical report shall:

i. Identify the possible sources of spills, leaks, untreated waste by-pass, and contaminated drainage. Loading and storage areas, power outage, waste treatment unit outage, and failure of process equipment, tanks and pipes should be considered.

ii. Evaluate the effectiveness of present facilities and procedures and state when they became operational.

iii. Predict the effectiveness of the proposed facilities and procedures and provide an implementation schedule containing interim and final dates when they will be constructed, implemented, or operational.

The Regional Water Board, after review of the technical report, may establish conditions which it deems necessary to control accidental discharges and to minimize the effects of such events. Such conditions shall be incorporated as part of this Order, upon notice to the Discharger.

l. A publicly owned treatment works (POTW) whose waste flow has been increasing, or is projected to increase, shall estimate when flows will reach hydraulic and treatment capacities of its treatment and disposal facilities. The projections shall be made in January, based on the last three years' average dry weather flows, peak wet weather flows and total annual flows, as appropriate. When any projection shows that capacity of any part of the facilities may be

exceeded in four years, the Discharger shall notify the Regional Water Board by 31 January. A copy of the notification shall be sent to appropriate local elected officials, local permitting agencies and the press. Within 120 days of the notification, the Discharger shall submit a technical report showing how it will prevent flow volumes from exceeding capacity or how it will increase capacity to handle the larger flows. The Regional Water Board may extend the time for submitting the report.

m. The Discharger shall submit technical reports as directed by the Executive Officer. All technical reports required herein that involve planning, investigation, evaluation, or design, or other work requiring interpretation and proper application of engineering or geologic sciences, shall be prepared by or under the direction of persons registered to practice in California pursuant to California Business and Professions Code, sections 6735, 7835, and 7835.1. To demonstrate compliance with Title 16, CCR, sections 415 and 3065, all technical reports must contain a statement of the qualifications of the responsible registered professional(s). As required by these laws, completed technical reports must bear the signature(s) and seal(s) of the registered professional(s) in a manner such that all work can be clearly attributed to the professional responsible for the work.

n. Laboratories that perform sample analyses must be identified in all monitoring reports submitted to the Regional Water Board and USEPA.

o. The Discharger shall conduct analysis on any sample provided by USEPA as part of the Discharge Monitoring Quality Assurance (DMQA) program. The results of any such analysis shall be submitted to USEPA's DMQA manager.

p. Effluent samples shall be taken downstream of the last addition of wastes to the treatment or discharge works where a representative sample may be obtained prior to mixing with the receiving waters. Samples shall be collected at such a point and in such a manner to ensure a representative sample of the discharge.

q. All monitoring and analysis instruments and devices used by the Discharger to fulfill the prescribed monitoring program shall be properly maintained and calibrated as necessary, at least yearly, to ensure their continued accuracy.

r. The Discharger shall file with the Regional Water Board technical reports on self-monitoring performed according to the detailed specifications contained in the Monitoring and Reporting Program attached to this Order.

s. The results of all monitoring required by this Order shall be reported to the Regional Water Board, and shall be submitted in such a format as to allow direct comparison with the limitations and requirements of this Order. Unless otherwise specified, discharge flows shall be reported in terms of the monthly average and the daily maximum discharge flows.

t. The Regional Water Board is authorized to enforce the terms of this permit under several provisions of the CWC, including, but not limited to, sections 13385, 13386, and 13387.

u. Prior to making any change in the point of discharge, place of use, or purpose of use of treated wastewater that results in a decrease of flow in any portion of a watercourse, the Discharger must file a petition with the State Water Board, Division of Water Rights, and receive approval for such a change. (CWC section 1211)

v. In the event the Discharger does not comply or will be unable to comply for any reason, with any prohibition, maximum daily effluent limitation, 1-hour average effluent limitation, or receiving water limitation contained in this Order, the Discharger shall notify the Regional Water Board by telephone (916) 464-3291 within 24 hours of having knowledge of such noncompliance, and shall confirm this notification in writing within five days, unless the Regional Water Board waives confirmation. The written notification shall include the information required by Attachment D, Section V.E.1 [40 CFR section 122.41(l)(6)(i)].

B. Monitoring and Reporting Program (MRP) Requirements

1. The Discharger shall comply with the MRP, and future revisions thereto, in Attachment E of this Order.

C. Special Provisions

1. Reopener Provisions

a. **Mercury.** This Order requires the Discharger to conduct additional monitoring and reporting of mercury concentrations in accordance with Attachment E. After receipt of at least twelve months of monitoring data, this Order may be reopened and a limit established for mercury. Additionally, if mercury is found to be causing toxicity based on acute or chronic toxicity test results, or if a TMDL program is adopted, this Order shall be reopened and an effluent concentration limitation imposed.

b. **Chloroform.** This Order requires the Discharger to conduct effluent and receiving water monitoring of chloroform concentrations in accordance with Attachment E. If the monitoring data indicates that the discharge has a reasonable potential to cause or contribute to an in-stream excursion above the chloroform OEHHA cancer potency factor, this Order may be reopened and a limit established for chloroform.

c. **Pollution Prevention.** This Order requires the Discharger prepare a salinity evaluation and minimization plan for salinity**.** Based on a review of the salinity evaluation and minimization plan, this Order may be reopened for addition and/or modification of the effluent limitations and requirements for salinity.

d. **Whole Effluent Toxicity.** As a result of a Toxicity Reduction Evaluation (TRE), this Order may be reopened to include a chronic toxicity limitation, a new acute toxicity limitation, and/or a limitation for a specific toxicant identified in the TRE. Additionally, if the State Water Board revises the SIP's toxicity control provisions that would require the establishment of numeric chronic toxicity effluent limitations, this Order may be reopened to include a numeric chronic toxicity effluent limitation based on the new provisions.

e. **Water Effects Ratios (WER) and Metal Translators.** A default WER of 1.0 has been used in this Order for calculating CTR criteria for applicable priority pollutant inorganic constituents. In addition, default dissolved-to-total metal translators have been used to convert water quality objectives from dissolved to total recoverable when developing effluent limitations for copper and zinc. If the Discharger performs studies to determine site-specific WERs and/or site-specific dissolved-to-total metal translators, this Order may be reopened to modify the effluent limitations for the applicable inorganic constituents.

f. **Mixing Zone Study**. Section 1.4.2.2 of the SIP requires the Discharger to submit receiving water mixing zone studies prior to allowing dilution credits for certain pollutants. Therefore, the Discharger may elect, as a means of compliance, to conduct a mixing zone study to evaluate any available assimilative capacity in Angels Creek. When requested, the Regional Water Board will review such studies and if warranted, may reopen this permit to make appropriate changes to the effluent limitations.

g. **Hardness Based Effluent Limitations**. If the Regional Water Board implements a new policy for calculating hardness-based effluent limitations, this Order may be reopened to modify the effluent limitations for the applicable hardness-based constituents.

2. Special Studies, Technical Reports and Additional Monitoring Requirements

a. **Chronic Whole Effluent Toxicity.** For compliance with the Basin Plan's narrative toxicity objective, this Order requires the Discharger to conduct chronic whole effluent toxicity testing, as specified in the Monitoring and Reporting Program (Attachment E, Section V.). Furthermore, this Provision requires the Discharger to investigate the causes of, and identify corrective actions to reduce or eliminate effluent toxicity. If the discharge exceeds the toxicity numeric monitoring trigger established in this Provision, the Discharger is required to initiate a Toxicity Reduction Evaluation (TRE), in accordance with an approved TRE Work Plan, and take actions to mitigate the impact of the discharge and prevent reoccurrence of toxicity. A TRE is a site-specific study conducted in a stepwise process to identify the source(s) of toxicity and the effective control measures for effluent toxicity. TREs are designed to identify the causative agents and sources of whole effluent toxicity, evaluate the effectiveness of the toxicity control options, and confirm the reduction in effluent toxicity. This Provision includes requirements for the Discharger to develop and submit a TRE

Work Plan and includes procedures for accelerated chronic toxicity monitoring and TRE initiation.

i. **Initial Investigative Toxicity Reduction Evaluation (TRE) Work Plan. Within 90 days of the effective date of this Order,** the Discharger shall submit to the Regional Water Board an Initial Investigative TRE Work Plan for approval by the Executive Officer. This should be a one to two page document including, at minimum:

a) A description of the investigation and evaluation techniques that will be used to identify potential causes and sources of effluent toxicity, effluent variability, and treatment system efficiency;

b) A description of the facility's methods of maximizing in-house treatment efficiency and good housekeeping practices, and a list of all chemicals used in operation of the facility; and

c) A discussion of who will conduct the Toxicity Identification Evaluation, if necessary (i.e. an in-house expert or outside contractor).

ii. **Accelerated Monitoring and TRE Initiation.** When the numeric toxicity monitoring trigger is exceeded during regular chronic toxicity monitoring, and the testing meets all test acceptability criteria, the Discharger shall initiate accelerated monitoring as required in the Accelerated Monitoring Specifications. WET testing results exceeding the monitoring trigger during accelerated monitoring demonstrates a pattern of toxicity and requires the Discharger to initiate a TRE to address the effluent toxicity.

iii. **Numeric Monitoring Trigger.** The numeric toxicity monitoring trigger is **16 TUc** (where TUc = 100/NOEC). The monitoring trigger is not an effluent limitation; it is the toxicity threshold at which the Discharger is required to begin accelerated monitoring and initiate a TRE.

iv. **Accelerated Monitoring Specifications.** If the monitoring trigger is exceeded during regular chronic toxicity testing, within 14-days of notification by the laboratory of the test results, the Discharger shall initiate accelerated monitoring. Accelerated monitoring shall consist of four (4) chronic toxicity tests in a six-week period (i.e. one test every two weeks) using the species that exhibited toxicity. The following protocol shall be used for accelerated monitoring and TRE initiation:

a) If the results of four (4) consecutive accelerated monitoring tests do not exceed the monitoring trigger, the Discharger may cease accelerated monitoring and resume regular chronic toxicity monitoring. However, notwithstanding the accelerated monitoring results, if there is adequate evidence of a pattern of effluent toxicity, the Executive Officer may require that the Discharger initiate a TRE.

b) If the source(s) of the toxicity is easily identified (i.e. temporary plant upset), the Discharger shall make necessary corrections to the facility and shall continue accelerated monitoring until four (4) consecutive accelerated tests do not exceed the monitoring trigger. Upon confirmation that the effluent toxicity has been removed, the Discharger may cease accelerated monitoring and resume regular chronic toxicity monitoring.

c) If the result of any accelerated toxicity test exceeds the monitoring trigger, the Discharger shall cease accelerated monitoring and initiate a TRE to investigate the cause(s) of, and identify corrective actions to reduce or eliminate effluent toxicity. Within thirty (30) days of notification by the laboratory of the test results exceeding the monitoring trigger during accelerated monitoring, the Discharger shall submit a TRE Action Plan to the Regional Water Board including, at minimum:

1) Specific actions the Discharger will take to investigate and identify the cause(s) of toxicity, including TRE WET monitoring schedule;

2) Specific actions the Discharger will take to mitigate the impact of the discharge and prevent the recurrence of toxicity; and

3) A schedule for these actions.

b. **Mixing Zone Study**. The Discharger shall conduct a mixing zone study following construction and operation of the outfall diffuser to confirm that adequate mixing is occurring in the receiving water. A work plan and schedule for conducting the study shall be submitted to the Regional Water Board within 120 days after Executive Officer approval to initiate a surface water discharge (see Provision VI.C.4.b, below). The mixing zone study shall be completed and submitted to the Regional Water Board within one year of approval of the work plan and schedule.

3. Best Management Practices and Pollution Prevention

a. **Salinity Evaluation and Minimization Plan.** The Discharger shall prepare a salinity evaluation and minimization plan to address sources of salinity from the domestic wastewater treatment system. The plan shall be completed and submitted to the Regional Water Board within 9 months of the effective date of this Order for approval by the Executive Officer. A work plan and time schedule for preparation of the salinity evaluation and minimization plan shall be completed and submitted **within 6 months of the effective date of this Order** for approval by the Executive Officer. The salinity evaluation and minimization plan shall be completed and submitted to the Regional Water Board **within two (2) years following work plan approval by the Executive Officer**, and progress reports shall be submitted in accordance with the Monitoring and Reporting Program (Attachment E, Section X.D.1.).

b. **Pollutant Evaluation and Minimization Plan.** The Discharger shall prepare and implement a pollutant evaluation and minimization plan for ammonia, copper,

lead, zinc, bis(2-chloroethyl)ether, and dichlorobromomethane to prevent elevated levels of these compounds to be discharged to the receiving water. A work plan and time schedule for preparation of the pollutant evaluation and minimization plan shall be completed and submitted **by 1 November 2009** for approval by the Executive Officer. The pollutant evaluation and minimization plan shall be completed and submitted to the Regional Water Board **within one (1) year following work plan approval by the Executive Officer.**

4. Construction, Operation and Maintenance Specifications

a. **Treatment Plant Operating Requirements.**

i. Public contact with wastewater, in and around the outfall, shall be discouraged through such means as fences, signs, and other acceptable alternatives.

b. **Initiation of Surface Water Discharge.** The surface water discharge to Angels Creek is contingent upon compliance with the following conditions:

i. **Effluent Limitation and Receiving Water Compliance.** The Discharger shall demonstrate compliance with Final Effluent Limitations IV.A.1, and Receiving Water Limitations V.A.

ii. **Outfall Diffuser.** The Discharger shall design, acquire necessary permits by appropriate agencies, and construct an outfall and diffuser to Angels Creek at Discharge Point EFF-001.

iii. **UV Disinfection.** The Discharger shall have completed construction and put into operation an ultraviolet light (UV) disinfection system.

iv. **Request for Surface Water Discharge.** The Discharger shall submit to the Regional Water Board a request for a surface water discharge to Angels Creek, which demonstrates compliance with items i. through iii., above. The surface water discharge is prohibited until the Executive Officer verifies compliance with Special Provisions VI.C.4.b., and approves the Discharger's request.

5. Special Provisions for Municipal Facilities (POTWs Only)

a. **Collection System.** On May 2, 2006, the State Water Board adopted State Water Board Order 2006-0003, a Statewide General WDR for Sanitary Sewer Systems. The Discharger shall be subject to the requirements of Order 2006-0003 and any future revisions thereto. Order 2006-0003 requires that all public agencies that currently own or operate sanitary sewer systems apply for coverage under the General WDR. On October 11, 2006, the Discharger applied for coverage under State Water Board Order 2006-0003 for operation of its wastewater collection system.

Regardless of the coverage obtained under Order 2006-0003, the Discharger's collection system is part of the treatment system that is subject to this Order. As such, pursuant to federal regulations, the Discharger must properly operate and maintain its collection system [40 CFR section 122.41(e)], report any non-compliance [40 CFR section 122.41(l)(6) and (7)], and mitigate any discharge from the collection system in violation of this Order [40 CFR. section 122.41(d)].

A limited portion of the wastewater collection system is outside the service area of the Discharger. In order to assure compliance with Discharge Prohibitions against overflows and bypasses, and to assure protection of the entire collection system and treatment works from industrial discharges, it is necessary that the Discharger control discharges into the system. To control discharges into the entire collection system, the Discharger shall establish interagency agreements with the collection system users. The interagency agreements shall contain, at a minimum, requirements for reporting of unauthorized releases of wastewater, maintenance of the collection system, backup power or adequate wet well capacity at all pump stations to prevent overflows during power outages and pump failures, and pump station high water alarm notification systems. The agreements shall also require implementation of an industrial pretreatment program, if applicable, that meets the minimum requirements of this permit. The Discharger shall comply with the following time schedule:

Task	Compliance Date
Submit interagency agreements for existing connections	**By September 1, 2007**
Submit interagency agreements for new connections	**30 days prior to connection**

b. **Electronic Notification**. This permit, and the Monitoring and Reporting Program which is a part of this permit, requires that certain parameters be monitored on a continuous basis. The wastewater treatment plant is not staffed on a full time basis. Permit violations or system upsets can go undetected during this period. The Discharger is required to establish an electronic system for operator notification for continuous recording device alarms. For existing continuous monitoring systems, the electronic notification system shall be installed **within six months of adoption** of this permit. For systems installed following permit adoption, the notification system shall be installed simultaneously.

6. Other Special Provisions

a. Discharge to Angels Creek shall be oxidized, coagulated, filtered, and adequately disinfected pursuant to the DHS reclamation criteria, California Code of Regulations, Title 22, Division 4, Chapter 3, (Title 22), or equivalent.

b. In the event of any change in control or ownership of land or waste discharge facilities presently owned or controlled by the Discharger, the Discharger shall notify the succeeding owner or operator of the existence of this Order by letter, a

copy of which shall be immediately forwarded to the Regional Water Board.

To assume operation under this Order, the succeeding owner or operator must apply in writing to the Executive Officer requesting transfer of the Order. The request must contain the requesting entity's full legal name, the State of incorporation if a corporation, address and telephone number of the persons responsible for contact with the Regional Water Board and a statement. The statement shall comply with the signatory and certification requirements in the Federal Standard Provisions (Attachment D, Section V.B.) and state that the new owner or operator assumes full responsibility for compliance with this Order. Failure to submit the request shall be considered a discharge without requirements, a violation of the California Water Code. Transfer shall be approved or disapproved in writing by the Executive Officer.

7. Compliance Schedules

Not Applicable

VII. COMPLIANCE DETERMINATION

Compliance with the effluent limitations contained in section IV of this Order will be determined as specified below:

A. **BOD and TSS Effluent Limitations**. Compliance with the final effluent limitations for BOD and TSS required in section IV.A.1(a) shall be ascertained by 24-hour composite samples. Compliance with effluent limitations in section IV.A.1(b) for percent removal shall be calculated using the arithmetic mean of 20°C BOD (5-day) and total suspended solids in effluent samples collected over a monthly period as a percentage of the arithmetic mean of the values for influent samples collected at approximately the same times during the same period.

B. **Total Coliform Organisms Effluent Limitations (Section IV.A.1.e)**. For each day that an effluent sample is collected and analyzed for total coliform organisms, the 7-day median shall be determined by calculating the median concentration of total coliform bacteria in the effluent utilizing the bacteriological results of the last seven days for which analyses have been completed. If the 7-day median of total coliform organisms exceeds a most probable number (MPN) of 2.2 per 100 milliliters, the Discharger will be considered out of compliance for that parameter for that 1 day only within the reporting period.

Attachment A – Definitions

Arithmetic Mean (μ), also called the average, is the sum of measured values divided by the number of samples. For ambient water concentrations, the arithmetic mean is calculated as follows:

Arithmetic mean = $\mu = \Sigma x / n$ where: Σx is the sum of the measured ambient water concentrations, and n is the number of samples.

Average Monthly Effluent Limitation (AMEL): the highest allowable average of daily discharges over a calendar month, calculated as the sum of all daily discharges measured during a calendar month divided by the number of daily discharges measured during that month.

Average Weekly Effluent Limitation (AWEL): the highest allowable average of daily discharges over a calendar week (Sunday through Saturday), calculated as the sum of all daily discharges measured during a calendar week divided by the number of daily discharges measured during that week.

Best Practicable Treatment or Control (BPTC): BPTC is a requirement of State Water Resources Control Board Resolution 68-16 – "Statement of Policy with Respect to Maintaining High Quality of Waters in California" (referred to as the "Antidegradation Policy"). BPTC is the treatment or control of a discharge necessary to assure that, *"(a) a pollution or nuisance will not occur and (b) the highest water quality consistent with maximum benefit to the people of the State will be maintained."* Pollution is defined in CWC Section 13050(l). In general, an exceedance of a water quality objective in the Basin Plan constitutes "pollution".

Bioaccumulative pollutants are those substances taken up by an organism from its surrounding medium through gill membranes, epithelial tissue, or from food and subsequently concentrated and retained in the body of the organism.

Carcinogenic pollutants are substances that are known to cause cancer in living organisms.

Coefficient of Variation (*CV*) is a measure of the data variability and is calculated as the estimated standard deviation divided by the arithmetic mean of the observed values.

Daily Discharge: Daily Discharge is defined as either: (1) the total mass of the constituent discharged over the calendar day (12:00 am through 11:59 pm) or any 24-hour period that reasonably represents a calendar day for purposes of sampling (as specified in the permit), for a constituent with limitations expressed in units of mass or; (2) the unweighted arithmetic mean measurement of the constituent over the day for a constituent with limitations expressed in other units of measurement (e.g., concentration).

The daily discharge may be determined by the analytical results of a composite sample taken over the course of one day (a calendar day or other 24-hour period defined as a day) or by the

arithmetic mean of analytical results from one or more grab samples taken over the course of the day.

For composite sampling, if 1 day is defined as a 24-hour period other than a calendar day, the analytical result for the 24-hour period will be considered as the result for the calendar day in which the 24-hour period ends.

Detected, but Not Quantified (DNQ) are those sample results less than the RL, but greater than or equal to the laboratory's MDL.

Dilution Credit is the amount of dilution granted to a discharge in the calculation of a water quality-based effluent limitation, based on the allowance of a specified mixing zone. It is calculated from the dilution ratio or determined through conducting a mixing zone study or modeling of the discharge and receiving water.

Effluent Concentration Allowance (ECA) is a value derived from the water quality criterion/objective, dilution credit, and ambient background concentration that is used, in conjunction with the coefficient of variation for the effluent monitoring data, to calculate a long-term average (LTA) discharge concentration. The ECA has the same meaning as waste load allocation (WLA) as used in U.S. EPA guidance (Technical Support Document For Water Quality-based Toxics Control, March 1991, second printing, EPA/505/2-90-001).

Enclosed Bays means indentations along the coast that enclose an area of oceanic water within distinct headlands or harbor works. Enclosed bays include all bays where the narrowest distance between the headlands or outermost harbor works is less than 75 percent of the greatest dimension of the enclosed portion of the bay. Enclosed bays include, but are not limited to, Humboldt Bay, Bodega Harbor, Tomales Bay, Drake's Estero, San Francisco Bay, Morro Bay, Los Angels-Long Beach Harbor, Upper and Lower Newport Bay, Mission Bay, and San Diego Bay. Enclosed bays do not include inland surface waters or ocean waters.

Estimated Chemical Concentration is the estimated chemical concentration that results from the confirmed detection of the substance by the analytical method below the ML value.

Estuaries means waters, including coastal lagoons, located at the mouths of streams that serve as areas of mixing for fresh and ocean waters. Coastal lagoons and mouths of streams that are temporarily separated from the ocean by sandbars shall be considered estuaries. Estuarine waters shall be considered to extend from a bay or the open ocean to a point upstream where there is no significant mixing of fresh water and seawater. Estuarine waters include~~d~~, but are not limited to, the Sacramento-San Joaquin Delta, as defined in Water Code section 12220, Suisun Bay, Carquinez Strait downstream to the Carquinez Bridge, and appropriate areas of the Smith, Mad, Eel, Noyo, Russian, Klamath, San Diego, and Otay rivers. Estuaries do not include inland surface waters or ocean waters.

Inland Surface Waters are all surface waters of the State that do not include the ocean, enclosed bays, or estuaries.

Instantaneous Maximum Effluent Limitation: the highest allowable value for any single grab sample or aliquot (i.e., each grab sample or aliquot is independently compared to the instantaneous maximum limitation).

Instantaneous Minimum Effluent Limitation: the lowest allowable value for any single grab sample or aliquot (i.e., each grab sample or aliquot is independently compared to the instantaneous minimum limitation).

Maximum Daily Effluent Limitation (MDEL) means the highest allowable daily discharge of a pollutant, over a calendar day (or 24-hour period). For pollutants with limitations expressed in units of mass, the daily discharge is calculated as the total mass of the pollutant discharged over the day. For pollutants with limitations expressed in other units of measurement, the daily discharge is calculated as the arithmetic mean measurement of the pollutant over the day.

Median is the middle measurement in a set of data. The median of a set of data is found by first arranging the measurements in order of magnitude (either increasing or decreasing order). If the number of measurements (n) is odd, then the median = $X_{(n+1)/2}$. If n is even, then the median = $(X_{n/2} + X_{(n/2)+1})/2$ (i.e., the midpoint between the $n/2$ and $n/2+1$).

Method Detection Limit (MDL) is the minimum concentration of a substance that can be measured and reported with 99 percent confidence that the analyte concentration is greater than zero, as defined in title 40 of the Code of Federal Regulations, Part 136, Attachment B, revised as of July 3, 1999.

Minimum Level (ML) is the concentration at which the entire analytical system must give a recognizable signal and acceptable calibration point. The ML is the concentration in a sample that is equivalent to the concentration of the lowest calibration standard analyzed by a specific analytical procedure, assuming that all the method specified sample weights, volumes, and processing steps have been followed.

Mixing Zone is a limited volume of receiving water that is allocated for mixing with a wastewater discharge where water quality criteria can be exceeded without causing adverse effects to the overall water body.

Not Detected (ND) are those sample results less than the laboratory's MDL.

Ocean Waters are the territorial marine waters of the State as defined by California law to the extent these waters are outside of enclosed bays, estuaries, and coastal lagoons. Discharges to ocean waters are regulated in accordance with the State Water Board's California Ocean Plan.

Persistent pollutants are substances for which degradation or decomposition in the environment is nonexistent or very slow.

Pollutant Minimization Program (PMP) means waste minimization and pollution prevention actions that include, but are not limited to, product substitution, waste stream recycling, alternative waste management methods, and education of the public and businesses. The

goal of the PMP shall be to reduce all potential sources of a priority pollutant(s) through pollutant minimization (control) strategies, including pollution prevention measures as appropriate, to maintain the effluent concentration at or below the water quality-based effluent limitation. Pollution prevention measures may be particularly appropriate for persistent bioaccumulative priority pollutants where there is evidence that beneficial uses are being impacted. The Regional Water Board may consider cost effectiveness when establishing the requirements of a PMP. The completion and implementation of a Pollution Prevention Plan, if required pursuant to Water Code section 13263.3(d), shall be considered to fulfill the PMP requirements.

Pollution Prevention means any action that causes a net reduction in the use or generation of a hazardous substance or other pollutant that is discharged into water and includes, but is not limited to, input change, operational improvement, production process change, and product reformulation (as defined in Water Code section 13263.3). Pollution prevention does not include actions that merely shift a pollutant in wastewater from one environmental medium to another environmental medium, unless clear environmental benefits of such an approach are identified to the satisfaction of the State or Regional Water Board.

Reporting Level (RL) is the ML (and its associated analytical method) chosen by the Discharger for reporting and compliance determination from the MLs included in this Order. The MLs included in this Order correspond to approved analytical methods for reporting a sample result that are selected by the Regional Water Board either from Appendix 4 of the SIP in accordance with section 2.4.2 of the SIP or established in accordance with section 2.4.3 of the SIP. The ML is based on the proper application of method-based analytical procedures for sample preparation and the absence of any matrix interferences. Other factors may be applied to the ML depending on the specific sample preparation steps employed. For example, the treatment typically applied in cases where there are matrix-effects is to dilute the sample or sample aliquot by a factor of ten. In such cases, this additional factor must be applied to the ML in the computation of the RL.

Satellite Collection System is the portion, if any, of a sanitary sewer system owned or operated by a different public agency than the agency that owns and operates the wastewater treatment facility that a sanitary sewer system is tributary to.

Source of Drinking Water is any water designated as municipal or domestic supply (MUN) in a Regional Water Board Basin Plan.

Standard Deviation (σ) is a measure of variability that is calculated as follows:

$$\sigma = (\sum[(x - \mu)^2]/(n - 1))^{0.5}$$

where:

x is the observed value;
μ is the arithmetic mean of the observed values; and
n is the number of samples.

Toxicity Reduction Evaluation (TRE) is a study conducted in a step-wise process designed to identify the causative agents of effluent or ambient toxicity, isolate the sources of toxicity,

evaluate the effectiveness of toxicity control options, and then confirm the reduction in toxicity. The first steps of the TRE consist of the collection of data relevant to the toxicity, including additional toxicity testing, and an evaluation of facility operations and maintenance practices, and best management practices. A Toxicity Identification Evaluation (TIE) may be required as part of the TRE, if appropriate. (A TIE is a set of procedures to identify the specific chemical(s) responsible for toxicity. These procedures are performed in three phases (characterization, identification, and confirmation) using aquatic organism toxicity tests.)

Attachment B – Topography Map

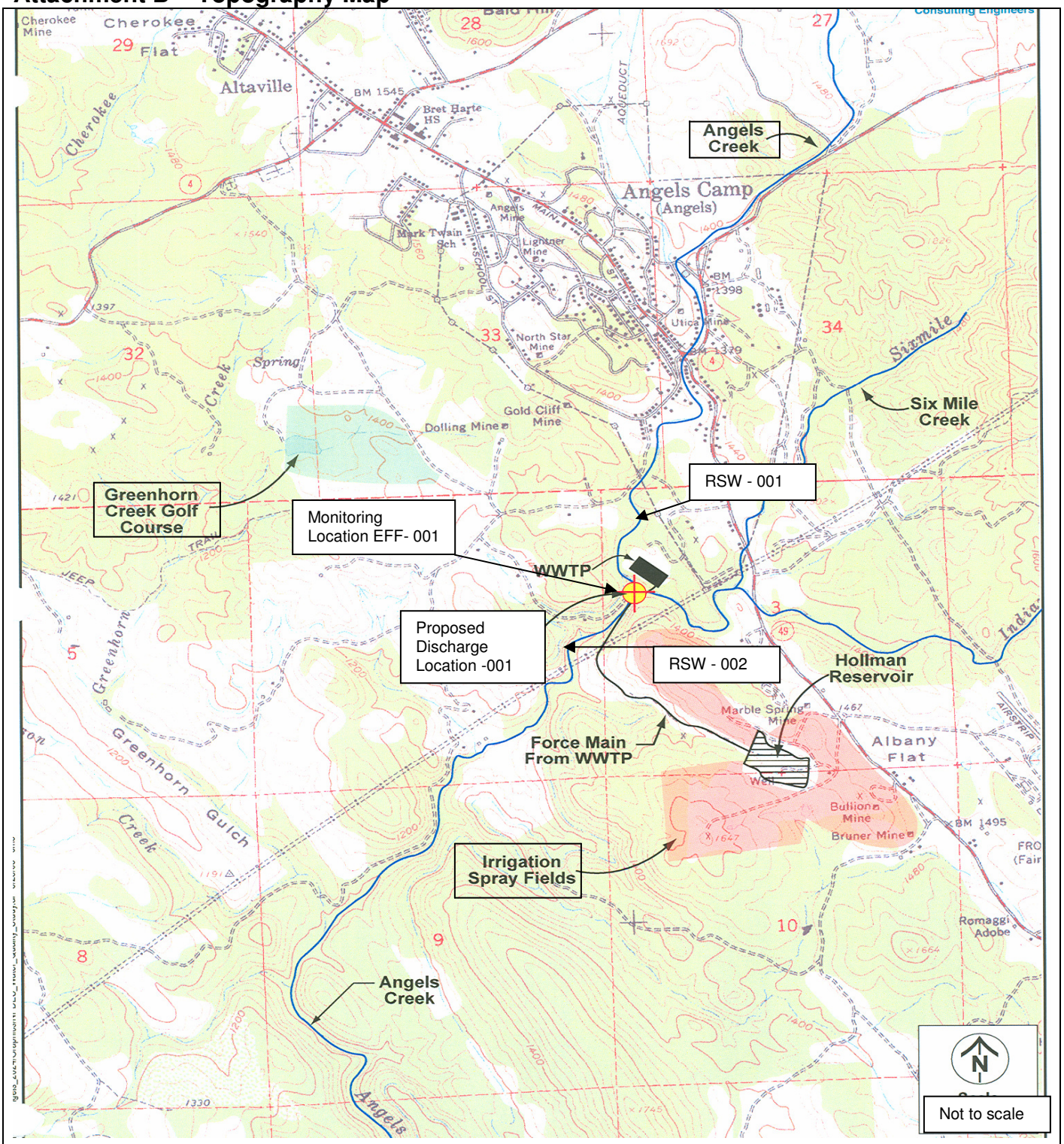

Drawing Reference: QUAD SHEET U.S.G.S TOPOGRAPHIC MAP **Not to scale**	SITE LOCATION MAP CITY OF ANGELS CITY OF ANGELS WWTP CALAVERAS COUNTY	

ATTACHMENT C – CITY OF ANGELS WWTP FLOW SCHEMATIC

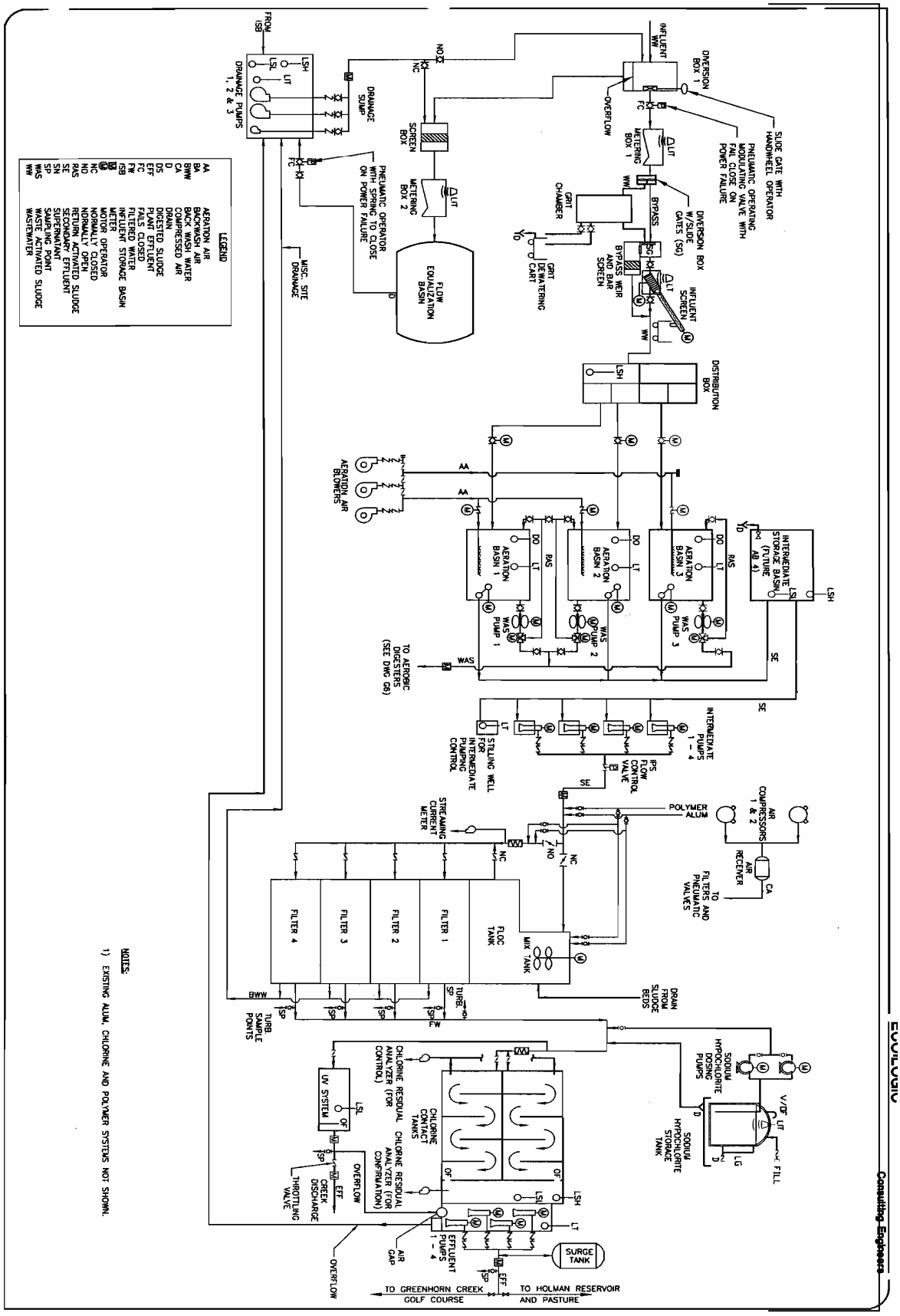

FIGURE 2 –PLANT FLOW SCHEMATIC
ADAPTED FROM DRAWING G5

ATTACHMENT D –STANDARD PROVISIONS

I. STANDARD PROVISIONS – PERMIT COMPLIANCE

A. Duty to Comply

1. The Discharger must comply with all of the conditions of this Order. Any noncompliance constitutes a violation of the Clean Water Act (CWA) and the California Water Code and is grounds for enforcement action, for permit termination, revocation and reissuance, or modification; or denial of a permit renewal application. (40 C.F.R. § 122.41(a).)

2. The Discharger shall comply with effluent standards or prohibitions established under Section 307(a) of the CWA for toxic pollutants and with standards for sewage sludge use or disposal established under Section 405(d) of the CWA within the time provided in the regulations that establish these standards or prohibitions, even if this Order has not yet been modified to incorporate the requirement. (40 C.F.R. § 122.41(a)(1).)

B. Need to Halt or Reduce Activity Not a Defense

It shall not be a defense for a Discharger in an enforcement action that it would have been necessary to halt or reduce the permitted activity in order to maintain compliance with the conditions of this Order. (40 C.F.R. § 122.41(c).)

C. Duty to Mitigate

The Discharger shall take all reasonable steps to minimize or prevent any discharge or sludge use or disposal in violation of this Order that has a reasonable likelihood of adversely affecting human health or the environment. (40 C.F.R. § 122.41(d).)

D. Proper Operation and Maintenance

The Discharger shall at all times properly operate and maintain all facilities and systems of treatment and control (and related appurtenances) which are installed or used by the Discharger to achieve compliance with the conditions of this Order. Proper operation and maintenance also includes adequate laboratory controls and appropriate quality assurance procedures. This provision requires the operation of backup or auxiliary facilities or similar systems that are installed by a Discharger only when necessary to achieve compliance with the conditions of this Order. (40 C.F.R. § 122.41(e).)

E. Property Rights

1. This Order does not convey any property rights of any sort or any exclusive privileges. (40 C.F.R. § 122.41(g).)

2. The issuance of this Order does not authorize any injury to persons or property or invasion of other private rights, or any infringement of state or local law or regulations. (40 C.F.R. § 122.5(c).)

F. Inspection and Entry

The Discharger shall allow the Regional Water Board, State Water Board, United States Environmental Protection Agency (USEPA), and/or their authorized representatives (including an authorized contractor acting as their representative), upon the presentation of credentials and other documents, as may be required by law, to (40 C.F.R. § 122.41(i); Wat. Code, § 13383):

1. Enter upon the Discharger's premises where a regulated facility or activity is located or conducted, or where records are kept under the conditions of this Order (40 C.F.R. § 122.41(i)(1));

2. Have access to and copy, at reasonable times, any records that must be kept under the conditions of this Order (40 C.F.R. § 122.41(i)(2));

3. Inspect and photograph, at reasonable times, any facilities, equipment (including monitoring and control equipment), practices, or operations regulated or required under this Order (40 C.F.R. § 122.41(i)(3)); and

4. Sample or monitor, at reasonable times, for the purposes of assuring Order compliance or as otherwise authorized by the CWA or the Water Code, any substances or parameters at any location. (40 C.F.R. § 122.41(i)(4).)

G. Bypass

1. Definitions

   a. “Bypass” means the intentional diversion of waste streams from any portion of a treatment facility. (40 C.F.R. § 122.41(m)(1)(i).)

   b. “Severe property damage” means substantial physical damage to property, damage to the treatment facilities, which causes them to become inoperable, or substantial and permanent loss of natural resources that can reasonably be expected to occur in the absence of a bypass. Severe property damage does not mean economic loss caused by delays in production. (40 C.F.R. § 122.41(m)(1)(ii).)

2. Bypass not exceeding limitations. The Discharger may allow any bypass to occur which does not cause exceedances of effluent limitations, but only if it is for essential maintenance to assure efficient operation. These bypasses are not subject to the provisions listed in Standard Provisions – Permit Compliance I.G.3, I.G.4, and I.G.5 below. (40 C.F.R. § 122.41(m)(2).)

3. Prohibition of bypass. Bypass is prohibited, and the Regional Water Board may take enforcement action against a Discharger for bypass, unless (40 C.F.R. § 122.41(m)(4)(i)):

    a. Bypass was unavoidable to prevent loss of life, personal injury, or severe property damage (40 C.F.R. § 122.41(m)(4)(i)(A));

    b. There were no feasible alternatives to the bypass, such as the use of auxiliary treatment facilities, retention of untreated wastes, or maintenance during normal periods of equipment downtime. This condition is not satisfied if adequate back-up equipment should have been installed in the exercise of reasonable engineering judgment to prevent a bypass that occurred during normal periods of equipment downtime or preventive maintenance (40 C.F.R. § 122.41(m)(4)(i)(B)); and

    c. The Discharger submitted notice to the Regional Water Board as required under Standard Provisions – Permit Compliance I.G.5 below. (40 C.F.R. § 122.41(m)(4)(i)(C).)

4. The Regional Water Board may approve an anticipated bypass, after considering its adverse effects, if the Regional Water Board determines that it will meet the three conditions listed in Standard Provisions – Permit Compliance I.G.3 above. (40 C.F.R. § 122.41(m)(4)(ii).)

5. Notice

    a. Anticipated bypass. If the Discharger knows in advance of the need for a bypass, it shall submit a notice, if possible at least 10 days before the date of the bypass. (40 C.F.R. § 122.41(m)(3)(i).)

    b. Unanticipated bypass. The Discharger shall submit notice of an unanticipated bypass as required in Standard Provisions - Reporting V.E below (24-hour notice). (40 C.F.R. § 122.41(m)(3)(ii).)

H. Upset

Upset means an exceptional incident in which there is unintentional and temporary noncompliance with technology based permit effluent limitations because of factors beyond the reasonable control of the Discharger. An upset does not include noncompliance to the extent caused by operational error, improperly designed treatment facilities, inadequate treatment facilities, lack of preventive maintenance, or careless or improper operation. (40 C.F.R. § 122.41(n)(1).)

1. Effect of an upset. An upset constitutes an affirmative defense to an action brought for noncompliance with such technology based permit effluent limitations if the requirements of Standard Provisions – Permit Compliance I.H.2 below are met. No determination made during administrative review of claims that noncompliance was

caused by upset, and before an action for noncompliance, is final administrative action subject to judicial review. (40 C.F.R. § 122.41(n)(2).).

2. Conditions necessary for a demonstration of upset. A Discharger who wishes to establish the affirmative defense of upset shall demonstrate, through properly signed, contemporaneous operating logs or other relevant evidence that (40 C.F.R. § 122.41(n)(3)):

   a. An upset occurred and that the Discharger can identify the cause(s) of the upset (40 C.F.R. § 122.41(n)(3)(i));

   b. The permitted facility was, at the time, being properly operated (40 C.F.R. § 122.41(n)(3)(ii));

   c. The Discharger submitted notice of the upset as required in Standard Provisions – Reporting V.E.2.b below (24-hour notice) (40 C.F.R. § 122.41(n)(3)(iii)); and

   d. The Discharger complied with any remedial measures required under Standard Provisions – Permit Compliance I.C above. (40 C.F.R. § 122.41(n)(3)(iv).)

3. Burden of proof. In any enforcement proceeding, the Discharger seeking to establish the occurrence of an upset has the burden of proof. (40 C.F.R. § 122.41(n)(4).)

II. STANDARD PROVISIONS – PERMIT ACTION

A. General

This Order may be modified, revoked and reissued, or terminated for cause. The filing of a request by the Discharger for modification, revocation and reissuance, or termination, or a notification of planned changes or anticipated noncompliance does not stay any Order condition. (40 C.F.R. § 122.41(f).)

B. Duty to Reapply

If the Discharger wishes to continue an activity regulated by this Order after the expiration date of this Order, the Discharger must apply for and obtain a new permit. (40 C.F.R. § 122.41(b).)

C. Transfers

This Order is not transferable to any person except after notice to the Regional Water Board. The Regional Water Board may require modification or revocation and reissuance of the Order to change the name of the Discharger and incorporate such other requirements as may be necessary under the CWA and the Water Code. (40 C.F.R. § 122.41(l)(3); § 122.61.)

III. STANDARD PROVISIONS – MONITORING

A. Samples and measurements taken for the purpose of monitoring shall be representative of the monitored activity. (40 C.F.R. § 122.41(j)(1).)

B. Monitoring results must be conducted according to test procedures under Part 136 or, in the case of sludge use or disposal, approved under Part 136 unless otherwise specified in Part 503 unless other test procedures have been specified in this Order. (40 C.F.R. § 122.41(j)(4); § 122.44(i)(1)(iv).)

IV. STANDARD PROVISIONS – RECORDS

A. Except for records of monitoring information required by this Order related to the Discharger's sewage sludge use and disposal activities, which shall be retained for a period of at least five years (or longer as required by Part 503), the Discharger shall retain records of all monitoring information, including all calibration and maintenance records and all original strip chart recordings for continuous monitoring instrumentation, copies of all reports required by this Order, and records of all data used to complete the application for this Order, for a period of at least three (3) years from the date of the sample, measurement, report or application. This period may be extended by request of the Regional Water Board Executive Officer at any time. (40 C.F.R. § 122.41(j)(2).)

B. Records of monitoring information shall include:

1. The date, exact place, and time of sampling or measurements (40 C.F.R. § 122.41(j)(3)(i));

2. The individual(s) who performed the sampling or measurements (40 C.F.R. § 122.41(j)(3)(ii));

3. The date(s) analyses were performed (40 C.F.R. § 122.41(j)(3)(iii));

4. The individual(s) who performed the analyses (40 C.F.R. § 122.41(j)(3)(iv));

5. The analytical techniques or methods used (40 C.F.R. § 122.41(j)(3)(v)); and

6. The results of such analyses. (40 C.F.R. § 122.41(j)(3)(vi).)

C. Claims of confidentiality for the following information will be denied (40 C.F.R. § 122.7(b)):

1. The name and address of any permit applicant or Discharger (40 C.F.R. § 122.7(b)(1)); and

2. Permit applications and attachments, permits and effluent data. (40 C.F.R. § 122.7(b)(2).)

V. STANDARD PROVISIONS – REPORTING

A. Duty to Provide Information

The Discharger shall furnish to the Regional Water Board, State Water Board, or USEPA within a reasonable time, any information which the Regional Water Board, State Water Board, or USEPA may request to determine whether cause exists for modifying, revoking and reissuing, or terminating this Order or to determine compliance with this Order. Upon request, the Discharger shall also furnish to the Regional Water Board, State Water Board, or USEPA copies of records required to be kept by this Order. (40 C.F.R. § 122.41(h); Wat. Code, § 13267.)

B. Signatory and Certification Requirements

1. All applications, reports, or information submitted to the Regional Water Board, State Water Board, and/or USEPA shall be signed and certified in accordance with Standard Provisions – Reporting V.B.2, V.B.3, V.B.4, and V.B.5 below. (40 C.F.R. § 122.41(k).)

2. All permit applications shall be signed by either a principal executive officer or ranking elected official. For purposes of this provision, a principal executive officer of a federal agency includes: (i) the chief executive officer of the agency, or (ii) a senior executive officer having responsibility for the overall operations of a principal geographic unit of the agency (e.g., Regional Administrators of USEPA). (40 C.F.R. § 122.22(a)(3).).

3. All reports required by this Order and other information requested by the Regional Water Board, State Water Board, or USEPA shall be signed by a person described in Standard Provisions – Reporting V.B.2 above, or by a duly authorized representative of that person. A person is a duly authorized representative only if:

   a. The authorization is made in writing by a person described in Standard Provisions – Reporting V.B.2 above (40 C.F.R. § 122.22(b)(1));

   b. The authorization specifies either an individual or a position having responsibility for the overall operation of the regulated facility or activity such as the position of plant manager, operator of a well or a well field, superintendent, position of equivalent responsibility, or an individual or position having overall responsibility for environmental matters for the company. (A duly authorized representative may thus be either a named individual or any individual occupying a named position.) (40 C.F.R. § 122.22(b)(2)); and

   c. The written authorization is submitted to the Regional Water Board and State Water Board. (40 C.F.R. § 122.22(b)(3).)

4. If an authorization under Standard Provisions – Reporting V.B.3 above is no longer accurate because a different individual or position has responsibility for the overall operation of the facility, a new authorization satisfying the requirements of Standard

Provisions – Reporting V.B.3 above must be submitted to the Regional Water Board and State Water Board prior to or together with any reports, information, or applications, to be signed by an authorized representative. (40 C.F.R. § 122.22(c).)

5. Any person signing a document under Standard Provisions – Reporting V.B.2 or V.B.3 above shall make the following certification:

   "I certify under penalty of law that this document and all attachments were prepared under my direction or supervision in accordance with a system designed to assure that qualified personnel properly gather and evaluate the information submitted. Based on my inquiry of the person or persons who manage the system or those persons directly responsible for gathering the information, the information submitted is, to the best of my knowledge and belief, true, accurate, and complete. I am aware that there are significant penalties for submitting false information, including the possibility of fine and imprisonment for knowing violations." (40 C.F.R. § 122.22(d).)

C. Monitoring Reports

1. Monitoring results shall be reported at the intervals specified in the Monitoring and Reporting Program (Attachment E) in this Order. (40 C.F.R. § 122.22(l)(4).)

2. Monitoring results must be reported on a Discharge Monitoring Report (DMR) form or forms provided or specified by the Regional Water Board or State Water Board for reporting results of monitoring of sludge use or disposal practices. (40 C.F.R. § 122.41(l)(4)(i).)

3. If the Discharger monitors any pollutant more frequently than required by this Order using test procedures approved under Part 136 or, in the case of sludge use or disposal, approved under Part 136 unless otherwise specified in Part 503, or as specified in this Order, the results of this monitoring shall be included in the calculation and reporting of the data submitted in the DMR or sludge reporting form specified by the Regional Water Board. (40 C.F.R. § 122.41(l)(4)(ii).)

4. Calculations for all limitations, which require averaging of measurements, shall utilize an arithmetic mean unless otherwise specified in this Order. (40 C.F.R. § 122.41(l)(4)(iii).)

D. Compliance Schedules

Reports of compliance or noncompliance with, or any progress reports on, interim and final requirements contained in any compliance schedule of this Order, shall be submitted no later than 14 days following each schedule date. (40 C.F.R. § 122.41(l)(5).)

E. Twenty-Four Hour Reporting

1. The Discharger shall report any noncompliance that may endanger health or the environment. Any information shall be provided orally within 24 hours from the time

the Discharger becomes aware of the circumstances. A written submission shall also be provided within five (5) days of the time the Discharger becomes aware of the circumstances. The written submission shall contain a description of the noncompliance and its cause; the period of noncompliance, including exact dates and times, and if the noncompliance has not been corrected, the anticipated time it is expected to continue; and steps taken or planned to reduce, eliminate, and prevent reoccurrence of the noncompliance. (40 C.F.R. § 122.41(l)(6)(i).)

2. The following shall be included as information that must be reported within 24 hours under this paragraph (40 C.F.R. § 122.41(l)(6)(ii)):

   a. Any unanticipated bypass that exceeds any effluent limitation in this Order. (40 C.F.R. § 122.41(l)(6)(ii)(A).)

   b. Any upset that exceeds any effluent limitation in this Order. (40 C.F.R. § 122.41(l)(6)(ii)(B).)

3. The Regional Water Board may waive the above-required written report under this provision on a case-by-case basis if an oral report has been received within 24 hours. (40 C.F.R. § 122.41(l)(6)(iii).)

F. Planned Changes

The Discharger shall give notice to the Regional Water Board as soon as possible of any planned physical alterations or additions to the permitted facility. Notice is required under this provision only when (40 C.F.R. § 122.41(l)(1)):

1. The alteration or addition to a permitted facility may meet one of the criteria for determining whether a facility is a new source in section 122.29(b) (40 C.F.R. § 122.41(l)(1)(i)); or

2. The alteration or addition could significantly change the nature or increase the quantity of pollutants discharged. This notification applies to pollutants that are not subject to effluent limitations in this Order. (40 C.F.R. § 122.41(l)(1)(ii).)

3. The alteration or addition results in a significant change in the Discharger's sludge use or disposal practices, and such alteration, addition, or change may justify the application of permit conditions that are different from or absent in the existing permit, including notification of additional use or disposal sites not reported during the permit application process or not reported pursuant to an approved land application plan. (40 C.F.R.§ 122.41(l)(1)(iii).)

G. Anticipated Noncompliance

The Discharger shall give advance notice to the Regional Water Board or State Water Board of any planned changes in the permitted facility or activity that may result in noncompliance with General Order requirements. (40 C.F.R. § 122.41(l)(2).)

H. Other Noncompliance

The Discharger shall report all instances of noncompliance not reported under Standard Provisions – Reporting V.C, V.D, and V.E above at the time monitoring reports are submitted. The reports shall contain the information listed in Standard Provision – Reporting V.E above. (40 C.F.R. § 122.41(l)(7).)

I. Other Information

When the Discharger becomes aware that it failed to submit any relevant facts in a permit application, or submitted incorrect information in a permit application or in any report to the Regional Water Board, State Water Board, or USEPA, the Discharger shall promptly submit such facts or information. (40 C.F.R. § 122.41(l)(8).)

VI. STANDARD PROVISIONS – ENFORCEMENT

A. The Regional Water Board is authorized to enforce the terms of this permit under several provisions of the Water Code, including, but not limited to, sections 13385, 13386, and 13387.

VII. ADDITIONAL PROVISIONS – NOTIFICATION LEVELS

A. Publicly-Owned Treatment Works (POTWs)

All POTWs shall provide adequate notice to the Regional Water Board of the following (40 C.F.R. § 122.42(b)):

1. Any new introduction of pollutants into the POTW from an indirect discharger that would be subject to sections 301 or 306 of the CWA if it were directly discharging those pollutants (40 C.F.R. § 122.42(b)(1)); and

2. Any substantial change in the volume or character of pollutants being introduced into that POTW by a source introducing pollutants into the POTW at the time of adoption of the Order. (40 C.F.R. § 122.42(b)(2).)

3. Adequate notice shall include information on the quality and quantity of effluent introduced into the POTW as well as any anticipated impact of the change on the quantity or quality of effluent to be discharged from the POTW. (40 C.F.R. § 122.42(b)(3).)

ATTACHMENT E – MONITORING AND REPORTING PROGRAM

Table of Contents

Attachment E – Monitoring and Reporting Program (MRP) E-1
I. General Monitoring Provisions E-1
III. Influent Monitoring Requirements E-2
A. Monitoring Location (Headworks INF-001) E-2
IV. Effluent Monitoring Requirements E-2
A. Monitoring Location (Angels Creek EFF-001) E-2
V. Whole Effluent Toxicity Testing Requirements E-4
VI. Land Discharge Monitoring Requirements (Set forth in Order No. 98-110) E-7
VII. Reclamation Monitoring Requirements (Set forth in Order No. 98-098) E-7
VIII. Receiving Water Monitoring Requirements – Surface Water and Groundwater E-7
A. Monitoring Location – Angels Creek (RSW-001 & RSW-002) E-7
IX. Other Monitoring Requirements E-7
A. Biosolids (Set forth in Order No. 98-110) E-7
B. Municipal Water Supply E-8
X. Reporting Requirements E-8
A. General Monitoring and Reporting Requirements E-8
B. Self Monitoring Reports (SMRs) E-10
C. Discharge Monitoring Reports (DMRs) E-11
D. Other Reports E-11

List of Tables

Table E-1. Monitoring Station Locations E-2
Table E-2. Influent Monitoring E-2
Table E-3. Effluent Monitoring E-3
Table E-4. Chronic Toxicity Testing Dilution Series E-5
Table E-5. Receiving Water Monitoring Requirements E-7
Table E-6. Municipal Water Supply Monitoring Requirements E-8
Table E-7. Monitoring Periods and Reporting Schedule E-11
Table E-8. Reporting Requirements for Special Provisions Progress Reports E-12

ATTACHMENT E – MONITORING AND REPORTING PROGRAM (MRP)

The Code of Federal Regulations section 122.48 requires that all NPDES permits specify monitoring and reporting requirements. Water Code Sections 13267 and 13383 also authorize the Regional Water Quality Control Board (Regional Water Board) to require technical and monitoring reports. This MRP establishes monitoring and reporting requirements, which implement the federal and state regulations.

I. GENERAL MONITORING PROVISIONS

A. Samples and measurements taken as required herein shall be representative of the volume and nature of the monitored discharge. All samples shall be taken at the monitoring locations specified below and, unless otherwise specified, before the monitored flow joins or is diluted by any other waste stream, body of water, or substance. Monitoring locations shall not be changed without notification to and the approval of this Regional Water Board.

B. Chemical, bacteriological, and bioassay analyses shall be conducted at a laboratory certified for such analyses by the State Department of Health Services. In the event a certified laboratory is not available to the Discharger, analyses performed by a noncertified laboratory will be accepted provided a Quality Assurance-Quality Control Program is instituted by the laboratory. A manual containing the steps followed in this program must be kept in the laboratory and shall be available for inspection by Regional Water Board staff. The Quality Assurance-Quality Control Program must conform to USEPA guidelines or to procedures approved by the Regional Water Board.

C. Laboratories that perform sample analyses shall be identified in all monitoring reports.

D. Appropriate flow measurement devices and methods consistent with accepted scientific practices shall be selected and used to ensure the accuracy and reliability of measurements of the volume of monitored discharges. All monitoring instruments and devices used by the Discharger to fulfill the prescribed monitoring program shall be properly maintained and calibrated as necessary to ensure their continued accuracy. All flow measurement devices shall be calibrated at least once per year to ensure continued accuracy of the devices.

E. Monitoring results, including noncompliance, shall be reported at intervals and in a manner specified in this Monitoring and Reporting Program.

II. Monitoring Locations

The Discharger shall establish the following monitoring locations to demonstrate compliance with the effluent limitations, discharge specifications, and other requirements in this Order:

Table E-1. Monitoring Station Locations

Discharge Point Name	Monitoring Location Name	Monitoring Location Description
--	INF-001	At the plant headworks prior to entering into treatment processes.
001	EFF-001	Entry point of tertiary effluent into Angels Creek Latitude 38° 03' 26"N & Longitude 120° 32' 13"W
	RSW-001	Angels Creek: 50 feet upstream of the discharge
	RSW-002	Angels Creek: 100 feet downstream of the discharge
	SPL-001	Municipal Water Supply

III. INFLUENT MONITORING REQUIREMENTS

A. Monitoring Location (Headworks INF-001)

1. Samples shall be collected at approximately the same time as effluent samples and should be representative of the influent for the period sampled. The Discharger shall monitor domestic influent to the facility at the headworks (INF-001) prior to entry into treatment processes as follows:

Table E-2. Influent Monitoring

Parameter	Units	Sample Type	Minimum Sampling Frequency[1]	Required Analytical Test Method
Flow	mgd	Meter	Continuous	
BOD 5-day 20°C	mg/L, lbs/day	24-hr Composite[2]	1/week	
Suspended Solids	mg/L, lbs/day	24-hr Composite[2]	1/week	
pH	Standard Units	Meter	1/day	

[1] Sampling required only when discharging to Angels Creek
[2] 24-hour flow proportional composite,

IV. EFFLUENT MONITORING REQUIREMENTS

A. Monitoring Location (Angels Creek EFF- 001)

1. The Discharger shall monitor tertiary treated effluent prior to discharge at EFF-001 (from the last connection in the outfall through which the tertiary effluent can be admitted into Angels Creek). Effluent samples should be representative of the volume and quality of the discharge and the time of collection shall be recorded. If more than one analytical test method is listed for a given parameter, the Discharger must select from the listed methods and corresponding Minimum Level. The Discharger shall monitor the effluent as follows:

Table E-3. Effluent Monitoring

Parameter	Units	Sample Type	Minimum Sampling Frequency	Required Analytical Test Method and (Minimum Level, units), respectively
Flow	mgd	Meter	Continuous	
Total Residual Chlorine[1]	mg/L	Grab	1/day	
Temperature[2]	°F	Meter	Continuous	
Dissolved Oxygen	mg/L	Meter	Continuous	
pH	Standard Units	Meter	Continuous	
Turbidity	NTU	Meter	Continuous	
BOD 5-day 20°C	mg/L, lbs/day	24-hr Composite[8]	1/day	
Total Suspended Solids	mg/L, lbs/day	24-hr Composite[8]	1/day	
Total Coliform Organisms	MPN/100 mL	Grab	1/day	
Settleable Solids	mL/L	Grab	1/day	
Electrical Conductivity	µmhos/cm	Grab	1/month	
TDS	mg/L	Grab	1/month	
Ammonia (as N) [3, 4]	mg/L, lbs/day	Grab	1/week	
Nitrate (as N)	mg/L, lbs/day	Grab	1/month	
Nitrite (as N)	mg/L, lbs/day	Grab	1/month	
Bis(2-chlorothyl)ether	µg/L	Grab	1/month	
Chloroform[7]	µg/L	Grab	1/month	
Dicholorobromomethane	µg/L	Grab	1/month	
Mercury[9]	µg/L	Grab	1/month	Method 1631
Copper[5]	µg/L	24-hr Composite[8]	1/month	
Lead[5]	µg/L	24-hr Composite[8]	1/month	
Zinc[5]	µg/L	24-hr Composite[8]	1/month	
Standard Minerals[6]	mg/L	Grab	1/year	
Priority Pollutants[5, 7]	µg/L	Grab	1/ permit term	

[1] Sampling for chlorine residual only necessary when chlorine used in treatment process.

[2] Effluent temperature monitoring shall be at the discharge end of Outfall 001.

[3] Concurrent with biotoxicity monitoring

[4] Report as total.

[5] For priority pollutant constituents with effluent limitations, detection limits shall be below the effluent limitations. If the lowest minimum level (ML) published in Appendix 4 of the Policy for Implementation of Toxics Standards for Inland Surface Waters, Enclosed Bays, and Estuaries of California (State Implementation Plan or SIP) is not below the effluent limitation, the detection limit shall be the lowestML. For priority pollutant constituents without effluent limitations, the detection limits shall be equal to or less than the lowest ML published in Appendix 4 of the SIP.

[6] Standard minerals shall include the following: boron, calcium, iron, magnesium, potassium, sodium, chloride, manganese, phosphorus, total alkalinity (including alkalinity series), and hardness, and include verification that the analysis is complete (i.e., cation/anion balance).

[7] Concurrent with receiving surface water sampling.

[8] 24-hour flow proportioned composite

[9] Mercury monitoring required only for first twelve months of discharge to determine if an effluent limitation is necessary.

If the discharge is intermittent rather than continuous, then on the first day of each such intermittent discharge, the Discharger shall monitor and record data for all of the constituents listed above, except for priority pollutants and standard minerals, after which the frequencies of analysis given in the schedule shall apply for the duration of each such intermittent discharge.

V. WHOLE EFFLUENT TOXICITY TESTING REQUIREMENTS

A. **Acute Toxicity Testing.** The Discharger shall conduct acute toxicity testing to determine whether the effluent is contributing acute toxicity to the receiving water. The Discharger shall meet the following acute toxicity testing requirements:

1. *Monitoring Frequency* – when discharging to Angels Creek, the Discharger shall perform quarterly acute toxicity testing, concurrent with effluent ammonia sampling.

2. *Sample Types* – For static non-renewal and static renewal testing, the samples shall be grab samples and shall be representative of the volume and quality of the discharge. The effluent samples shall be taken at the effluent monitoring location EFF-001.

3. *Test Species* – Test Species shall be rainbow trout (Oncorhchus mykiss).

4. *Methods* – The acute toxicity testing samples shall be analyzed using EPA-821-R-02-012, Fifth Edition. Temperature, total residual chlorine, and pH shall be recorded at the time of sample collection. No pH adjustment may be made unless approved by the Executive Officer.

5. *Test Failure* – If an acute toxicity test does not meet all test acceptability criteria, as specified in the test method, the Discharger must re-sample and re-test as soon as possible, not to exceed 7 days following notification of test failure.

B. **Chronic Toxicity Testing**. The Discharger shall conduct three species chronic toxicity testing to determine whether the effluent is contributing chronic toxicity to the receiving water. The Discharger shall meet the following chronic toxicity testing requirements:

1. *Monitoring Frequency* – when discharging to Angels Creek, the Discharger shall perform quarterly three species chronic toxicity testing.

2. *Sample Types* – Effluent samples shall be grab samples and shall be representative of the volume and quality of the discharge. The effluent samples shall be taken at the effluent monitoring location specified in the Monitoring and Reporting Program. The receiving water control shall be a grab sample obtained from the RSW-001 (upstream sampling location out of influence of the discharge) sampling location, as identified in the Monitoring and Reporting Program.

3. *Sample Volumes* – Adequate sample volumes shall be collected to provide renewal water to complete the test in the event that the discharge is intermittent.

4. *Test Species* – Chronic toxicity testing measures sublethal (e.g. reduced growth, reproduction) and/or lethal effects to test organisms exposed to an effluent compared to that of the control organisms. The Discharger shall conduct chronic toxicity tests with:

   - The cladoceran, water flea, *Ceriodaphnia dubia* (survival and reproduction test);
   - The fathead minnow, *Pimephales promelas* (larval survival and growth test); and
   - The green alga, *Selenastrum capricornutum* (growth test).

5. *Methods* – The presence of chronic toxicity shall be estimated as specified in *Short-term Methods for Estimating the Chronic Toxicity of Effluents and Receiving Waters to Freshwater Organisms, Fourth Edition,* EPA/821-R-02-013, October 2002.

6. *Reference Toxicant* – As required by the SIP, all chronic toxicity tests shall be conducted with concurrent testing with a reference toxicant and shall be reported with the chronic toxicity test results.

7. *Dilutions* – For regular and accelerated chronic toxicity testing it is not necessary to perform the test using the full dilution series identified in Table E-4, below. The test may be performed using a dilution at 6.25% effluent. For TRE monitoring, ~~T~~the chronic toxicity testing shall be performed using the full dilution series identified in Table E-4~~, below~~. The receiving water control shall be used as the diluent (unless the receiving water is toxic).

8. *Test Failure* –The Discharger must re-sample and re-test as soon as possible, but no later than fourteen (14) days after receiving notification of a test failure. A test failure is defined as follows:

   a. The reference toxicant test or the effluent test does not meet all test acceptability criteria as specified in the *Short-term Methods for Estimating the Chronic Toxicity of Effluents and Receiving Waters to Freshwater Organisms, Fourth Edition*, EPA/821-R-02-013, October 2002 (Method Manual), and its subsequent amendments or revisions; or

   b. The percent minimum significant difference (PMSD) measured for the test exceeds the upper PMSD bound variability criterion in Table 6 on page 52 of the Method Manual. (A retest is only required in this case if the test results do not exceed the monitoring trigger specified in Special Provisions VI. 2.a.iii.)

Table E-4. Chronic Toxicity Testing Dilution Series

Sample	Dilutions (%)					Controls	
	~~10~~50	~~7~~25	12.5~~0~~	6.25	3.12~~.~~5	Receiving Water	Laboratory Water
% Effluent	~~10~~50	~~7~~25	12.5~~0~~	6.25	3.12~~.~~5	0	0
% Receiving Water	50	~~2~~75	87.5~~0~~	93.75	96.87~~.~~5	100	0
% Laboratory Water	0	0	0	0	0	0	100

C. **WET Testing Notification Requirements**. The Discharger shall notify the Regional Water Board within 24-hrs after the receipt of test results exceeding the monitoring trigger during regular or accelerated monitoring, or an exceedance of the acute toxicity effluent limitation.

D. **WET Testing Reporting Requirements**. All toxicity test reports shall include the contracting laboratory's complete report provided to the Discharger and shall be in accordance with the appropriate "Report Preparation and Test Review" sections of the method manuals. At a minimum, whole effluent toxicity monitoring shall be reported as follows:

1. **Chronic WET Reporting.** Regular chronic toxicity monitoring results shall be reported to the Regional Water Board within 30 days following completion of the test or with the following monthly discharger self monitoring report, and shall contain, at minimum:

   a. The results expressed in TUc, measured as 100/NOEC, and also measured as $100/LC_{50}$, $100/EC_{25}$, $100/IC_{25}$, and $100/IC_{50}$, as appropriate.

   b. The statistical methods used to calculate endpoints;

   c. The statistical output page, which includes the calculation of the percent minimum significant difference (PMSD);

   d. The dates of sample collection and initiation of each toxicity test; and

   e. The results compared to the numeric toxicity monitoring trigger.

   Additionally, the monthly discharger self-monitoring reports shall contain an updated chronology of chronic toxicity test results expressed in TUc, and organized by test species, type of test (survival, growth or reproduction), and monitoring frequency, i.e., either quarterly, monthly, accelerated, or TRE.

2. **Acute WET Reporting.** Acute toxicity test results shall be submitted with the monthly discharger self-monitoring reports and reported as percent survival.

3. **TRE Reporting.** Reports for Toxicity Reduction Evaluations shall be submitted in accordance with the schedule contained in the Discharger's approved TRE Work Plan.

VI. LAND DISCHARGE MONITORING REQUIREMENTS (Set forth in Order No. 98-110)

VII. RECLAMATION MONITORING REQUIREMENTS (Set forth in Order No. 98-098)

VIII. RECEIVING WATER MONITORING REQUIREMENTS – SURFACE WATER AND GROUNDWATER

A. Monitoring Location – Angels Creek (RSW-001 & RSW-002)

1. The Discharger shall monitor Angels Creek only when a discharge is occurring, at RSW-001 and RSW-002 as follows:

Table E-5. Receiving Water Monitoring Requirements

Parameter	Units	Sample Type	Minimum Sampling Frequency[1]	Required Analytical Test Method
Flow	mgd	Meter	Continuous[2]	
Dissolved Oxygen	mg/L	Grab	1/week	(3)
pH	Standard Units	Grab	1/week	(3)
Electrical Conductivity (25ºC)	µmhos/cm	Grab	1/month	(3)
TDS	mg/L	Grab	1/month	(3)
Temperature	°F (°C)	Grab	1/week	(3)
Ammonia [4]	mg/l	Grab	1/week	(3)
Turbidity	NTU	Grab	1/week	(3)
Chloroform	µg/L	Grab	1/month	(3)
Priority Pollutants	µg/L	Grab	1/permit term	(3)

[1] If a discharge is intermittent rather than continuous, the Discharger shall monitor and record data for all of the constituents listed above on the first day of each intermittent discharge and thereafter the frequencies in the schedule shall apply. In no event shall the Discharger be required to monitor and record data more often than twice the frequencies listed in the schedule.
[2] Flow monitoring is required only at monitoring station RSW-001 when there is a discharge.
[3] Pollutants shall be analyzed using the analytical methods described in 40 CFR 136.
[4] Report as both total and un-ionized ammonia with corresponding pH and temperature measurements.

In conducting receiving water sampling, a log shall be kept of the receiving water conditions throughout the reach bounded by Monitoring Location RSW-001 to RSW-002. Attention shall be given to the presence or absence of:

Floating or suspended matter
Discoloration
Bottom deposits
Aquatic life
Visible films, sheens or coatings
Fungi, slimes, or objectionable growths
Potential nuisance conditions

Notes on receiving water conditions shall be summarized in the monitoring report.

IX. OTHER MONITORING REQUIREMENTS

A. Biosolids (Set forth in Order No. 98-110)

B. Municipal Water Supply

1. Monitoring Location SPL-001

The Discharger shall monitor the Municipal Water Supply at SPL-001 as follows. A sampling station shall be established where a representative sample of the municipal water supply can be obtained. Municipal water supply samples shall be collected at approximately the same time as effluent samples.

Table E-6. Municipal Water Supply Monitoring Requirements

Parameter	Units	Sample Type	Minimum Sampling Frequency	Required Analytical Test Method
Standard Minerals[1]	mg/L	Grab	1/year	
Electrical Conductivity (25ºC)[2]	µmhos/cm	Grab	1/year	
Total Dissolved Solids[2]	mg/L	Grab	1/year	

[1] Standard minerals shall include the following: boron, calcium, iron, magnesium, potassium, sodium, chloride, manganese, phosphorus, total alkalinity (including alkalinity series), and hardness, and include verification that the analysis is complete (i.e., cation/anion balance).

[2] If the water supply is from more than one source, the TDS and EC shall be reported as a weighted average and include copies of supporting calculations.

X. REPORTING REQUIREMENTS

A. General Monitoring and Reporting Requirements

1. The Discharger shall comply with all Standard Provisions (Attachment D) related to monitoring, reporting, and recordkeeping.

2. Upon written request of the Regional Water Board, the Discharger shall submit a summary monitoring report. The report shall contain both tabular and graphical summaries of the monitoring data obtained during the previous year(s).

3. **Compliance Time Schedules.** For compliance time schedules, if any, included in the Order, the Discharger shall submit to the Regional Water Board, on or before each compliance due date, the specified document or a written report detailing compliance or noncompliance with the specific date and task. If noncompliance is reported, the Discharger shall state the reasons for noncompliance and include an estimate of the date when the Discharger will be in compliance. The Discharger shall notify the Regional Water Board by letter when it returns to compliance with the compliance time schedule.

4. The Discharger shall report to the Regional Water Board any toxic chemical release data it reports to the State Emergency Response Commission within 15 days of reporting the data to the Commission pursuant to section 313 of the "Emergency Planning and Community Right to Know Act of 1986.

5. **Reporting Protocols.** The Discharger shall report with each sample result the applicable Reporting Level (RL) and the current Method Detection Limit (MDL), as determined by the procedure in Part 136.

   The Discharger shall report the results of analytical determinations for the presence of chemical constituents in a sample using the following reporting protocols:

   a. Sample results greater than or equal to the RL shall be reported as measured by the laboratory (i.e., the measured chemical concentration in the sample).

   b. Sample results less than the RL, but greater than or equal to the laboratory's MDL, shall be reported as "Detected, but Not Quantified," or DNQ. The estimated chemical concentration of the sample shall also be reported.

      For the purposes of data collection, the laboratory shall write the estimated chemical concentration next to DNQ as well as the words "Estimated Concentration" (may be shortened to "Est. Conc."). The laboratory may, if such information is available, include numerical estimates of the data quality for the reported result. Numerical estimates of data quality may be percent accuracy (± a percentage of the reported value), numerical ranges (low to high), or any other means considered appropriate by the laboratory.

   c. Sample results less than the laboratory's MDL shall be reported as "Not Detected," or ND.

   d. Dischargers are to instruct laboratories to establish calibration standards so that the ML value (or its equivalent if there is differential treatment of samples relative to calibration standards) is the lowest calibration standard. At no time is the Discharger to use analytical data derived from *extrapolation* beyond the lowest point of the calibration curve.

6. **Multiple Sample Data.** When determining compliance with an AMEL , AWEL, or MDEL for priority pollutants and more than one sample result is available, the Discharger shall compute the arithmetic mean unless the data set contains one or more reported determinations of "Detected, but Not Quantified" (DNQ) or "Not Detected" (ND). In those cases, the Discharger shall compute the median in place of the arithmetic mean in accordance with the following procedure:

   a. The data set shall be ranked from low to high, ranking the reported ND determinations lowest, DNQ determinations next, followed by quantified values (if any). The order of the individual ND or DNQ determinations is unimportant.

   b. The median value of the data set shall be determined. If the data set has an odd number of data points, then the median is the middle value. If the data set has an even number of data points, then the median is the average of the two values around the middle unless one or both of the points are ND or DNQ, in which case the median value shall be the lower of the two data points where DNQ is lower than a value and ND is lower than DNQ.

B. Self Monitoring Reports (SMRs)

1. At any time during the term of this permit, the State or Regional Water Board may notify the Discharger to electronically submit Self-Monitoring Reports (SMRs) using the State Water Board's California Integrated Water Quality System (CIWQS) Program Web site (http://www.waterboards.ca.gov/ciwqs/index.html). Until such notification is given, the Discharger shall submit hard copy SMRs. The CIWQS Web site will provide additional directions for SMR submittal in the event there will be service interruption for electronic submittal.

2. Monitoring results shall be submitted to the Regional Water Board by the **first day** of the second month following sample collection. Quarterly and annual monitoring results shall be submitted by the **first day of the second month following each calendar quarter, semi-annual period, and year**, respectively.

3. In reporting the monitoring data, the Discharger shall arrange the data in tabular form so that the date, the constituents, and the concentrations are readily discernible. The data shall be summarized in such a manner to illustrate clearly whether the discharge complies with waste discharge requirements. The highest daily maximum for the month, monthly and weekly averages, and medians, and removal efficiencies (%) for BOD and Total Suspended Solids, shall be determined and recorded as needed to demonstrate compliance.

4. With the exception of flow, all constituents monitored on a continuous basis (metered), shall be reported as daily maximums, daily minimums, and daily averages; flow shall be reported as the total volume discharged per day for each day of discharge.

5. If the Discharger monitors any pollutant at the locations designated herein more frequently than is required by this Order, the results of such monitoring shall be included in the calculation and reporting of the values required in the discharge monitoring report form. Such increased frequency shall be indicated on the discharge monitoring report form.

6. A letter transmitting the self-monitoring reports shall accompany each report. Such a letter shall include a discussion of requirement violations found during the reporting period, and actions taken or planned for correcting noted violations, such as operation or facility modifications. If the Discharger has previously submitted a report describing corrective actions and/or a time schedule for implementing the corrective actions, reference to the previous correspondence will be satisfactory. The transmittal letter shall contain the penalty of perjury statement by the Discharger, or the Discharger's authorized agent, as described in the Standard Provisions.

7. SMRs must be submitted to the Regional Water Board, signed and certified as required by the Standard Provisions (Attachment D), to the address listed below:

Regional Water Quality Control Board

Central Valley Region
11020 Sun Center Dr., Suite #200
Rancho Cordova, CA 95670-6114

8. Monitoring periods and reporting for all required monitoring shall be completed according to the following schedule:

Table E-7. Monitoring Periods and Reporting Schedule

Sampling Frequency	Monitoring Period Begins On…	Monitoring Period	SMR Due Date
Continuous	**First day of discharge to Angels Creek**	**All through the discharge period**	**First day of second calendar month following month of sampling**
Daily	**First day of discharge to Angels Creek**	**Calendar Day (Midnight through 11.59pm)**	**First day of second calendar month following month of sampling**
Weekly	**First day of discharge to Angels Creek**	**Sunday through Sunday**	**First day of second calendar month following month of sampling**
Monthly	**First day of calendar month following permit effective date or on permit effective date if that date is first day of the month**	**1st day of calendar month through last day of calendar month**	**First day of second calendar month following month of sampling**
Quarterly	**Closest of January 1, April 1, July 1, or October 1 following (or on) permit effective date**	**January 1 through March 31 April 1 through June 30 July 1 through September 30 October 1 through December 31**	**May 1 August 1 November 1 February 1**
Semiannually	**Closest of January 1 or July 1 following (or on) permit effective date**	**January 1 through June 30 July 1 through December 31**	**August 1 February 1**
Annually	**January 1 following (or on) permit effective date**	**January 1 through December 31**	**February 1 following year of sampling**

C. Discharge Monitoring Reports (DMRs)

Not Applicable. This is a minor discharge.

D. Other Reports

1. **Progress Reports.** As specified in the compliance time schedules required in Special Provisions VI, progress reports shall be submitted in accordance with the

following reporting requirements. At minimum, the progress reports shall include a discussion of the status of final compliance, whether the Discharger is on schedule to meet the final compliance date, and the remaining tasks to meet the final compliance date.

Table E-8. Reporting Requirements for Special Provisions Progress Reports

Special Provision	Reporting Requirements
Salinity Evaluation and Minimization Plan (Section VI.C.3.a.)	**1 February**, annually, after approval of work plan

2. Within **60 days** of permit adoption, the Discharger shall submit a report outlining minimum levels, method detection limits, and analytical methods for approval, with a goal to achieve detection levels below applicable water quality criteria. At a minimum, the Discharger shall comply with the monitoring requirements for CTR constituents as outlined in Section 2.3 and 2.4 of the *Policy for Implementation of Toxics Standards for Inland Surface Waters, Enclosed Bays, and Estuaries of California*, adopted 2 March 2000 by the State Water Resources Control Board. All peaks identified by analytical methods shall be reported.

3. The Discharger's sanitary sewer system collects wastewater using sewers, pipes, pumps, and/or other conveyance systems and directs the raw sewage to the wastewater treatment plant. A "sanitary sewer overflow" is defined as a discharge to ground or surface water from the sanitary sewer system at any point upstream of the wastewater treatment plant. Sanitary sewer overflows are prohibited by this Order. All violations must be reported as required in Standard Provisions. Facilities (such as wet wells, regulated impoundments, tanks, highlines, *etc.*) may be part of a sanitary sewer system and discharges to these facilities are not considered sanitary sewer overflows, provided that the waste is fully contained within these temporary storage facilities.

4. **Annual Operations Report**. By **1 February** of each year, the Discharger shall submit a written report to the Executive Officer containing the following:

   a. The names, certificate grades, and general responsibilities of all persons employed at the Facility.

   b. The names and telephone numbers of persons to contact regarding the plant for emergency and routine situations.

   c. A statement certifying when the flow meter(s) and other monitoring instruments and devices were last calibrated, including identification of who performed the calibration.

   d. A statement certifying whether the current operation and maintenance manual, and contingency plan, reflect the wastewater treatment plant as currently constructed and operated, and the dates when these documents were last revised and last reviewed for adequacy.

e. The Discharger may also be requested to submit an annual report to the Regional Water Board with both tabular and graphical summaries of the monitoring data obtained during the previous year. Any such request shall be made in writing. The report shall discuss the compliance record. If violations have occurred, the report shall also discuss the corrective actions taken and planned to bring the discharge into full compliance with the waste discharge requirements.

ATTACHMENT F – FACT SHEET

Table of Contents

Attachment F – Fact Sheet F-3
I. Permit Information F-3
II. Facility Description F-4
A. Description of Wastewater and Biosolids Treatment or Controls F-5
B. Discharge Points and Receiving Waters F-6
C. Summary of Existing Requirements and Self-Monitoring Report (SMR) Data F-6
D. Compliance Summary F-6
E. Planned Changes – Not Applicable F-6
III. Applicable Plans, Policies, and Regulations F-6
A. Legal Authority F-6
B. California Environmental Quality Act (CEQA) F-6
C. State and Federal Regulations, Policies, and Plans F-7
D. Impaired Water Bodies on CWA 303(d) List F-9
E. Other Plans, Polices and Regulations F-9
IV. Rationale For Effluent Limitations and Discharge Specifications F-10
A. Discharge Prohibitions F-11
B. Technology-Based Effluent Limitations F-12
1. Scope and Authority F-12
2. Applicable Technology-Based Effluent Limitations (TBEL) F-12
C. Water Quality-Based Effluent Limitations (WQBELs) F-13
1. Scope and Authority F-13
2. Applicable Beneficial Uses and Water Quality Criteria and Objectives F-13
3. Determining the Need for WQBELs F-20
4. WQBEL Calculations F-34
5. Whole Effluent Toxicity (WET) F-38
D. Final Effluent Limitations F-38
1. Mass-based Effluent Limitations. F-38
2. Averaging Periods for Effluent Limitations. F-39
3. Satisfaction of Anti-Backsliding Requirements. F-39
4. Satisfaction of Antidegradation Policy F-40
F. Land Discharge Specifications F-43
G. Reclamation Specifications F-43
V. Rationale for Receiving Water Limitations F-43
A. Surface Water F-43
B. Groundwater F-47
VI. Rationale for Monitoring and Reporting Requirements F-47
A. Influent Monitoring F-47
B. Effluent Monitoring F-47
C. Whole Effluent Toxicity Testing Requirements F-47
D. Receiving Water Monitoring F-48
1. Surface Water F-48
2. Groundwater F-48
E. Other Monitoring Requirements F-48
VII. Rationale for Provisions F-48

A. Standard Provisions F-48
B. Special Provisions F-49
1. Reopener Provisions F-49
2. Special Studies and Additional Monitoring Requirements F-50
3. Best Management Practices and Pollution Prevention F-54
4. Construction, Operation, and Maintenance Specifications F-54
5. Special Provisions for Municipal Facilities (POTWs Only) F-55
6. Other Special Provisions F-55
VIII. Public Participation F-55
A. Notification of Interested Parties F-55
B. Written Comments F-56
C. Public Hearing F-56
D. Waste Discharge Requirements Petitions F-56
E. Information and Copying F-57
F. Register of Interested Persons F-57
G. Additional Information F-57

List of Tables

Table F-1. Facility Information 3
Table F-2. Summary of Technology-based Effluent Limitations 13
Table F-3: Copper Hardness Evaluation 15
Table F-4. Salinity Water Quality Criteria/Objectives 29
Table F-5. Statistics for Effluent Constituents with Detectable Results 33
Table F-6: WQBEL Calculations for Ammonia 35
Table F-7: WQBEL Calculations for Copper 35
Table F-8: WQBEL Calculations for Lead 36
Table F-9: WQBEL Calculations for Zinc 36
Table F-10: WQBEL Calculations for Dichlorobromomethane 37
Table F-11: WQBEL Calculations for Bis(2-chloroethyl)ether 37
Table F-12. Summary of Water Quality-Based Effluent Limitations 37
Table F-13. Summary of Final Effluent Limitations 42

ATTACHMENT F – FACT SHEET

As described in section II of this Order, this Fact Sheet includes the legal requirements and technical rationale that serve as the basis for the requirements of this Order.

This Order has been prepared under a standardized format to accommodate a broad range of discharge requirements for Dischargers in California. Only those sections or subsections of this Order that are specifically identified as "not applicable" have been determined not to apply to this Discharger. Sections or subsections of this Order not specifically identified as "not applicable" are fully applicable to this Discharger.

I. PERMIT INFORMATION

The following table summarizes administrative information related to the facility.

Table F-1. Facility Information

WDID	94-6000292
Discharger	City of Angels
Name of Facility	City of Angels Wastewater Treatment Plant
Facility Address	3000 Centennial Road
	Angels, CA 95222
	Calaveras County
Facility Contact, Title and Phone	(209)-754-1824
Authorized Person to Sign and Submit Reports	Gary S. Ghio, City Engineer
Mailing Address	584 South Main St., P.O. Box 667, Angels, CA 95222
Billing Address	Same as above
Type of Facility	POTW
Major or Minor Facility	Minor
Threat to Water Quality	3
Complexity	B
Pretreatment Program	No
Reclamation Requirements	Producer of Title 22 water
Facility Permitted Flow	1.9 million gallons per day
Facility Design Flow	1.9 million gallons per day
Watershed	Stanislaus River Watershed
Receiving Water	Angels Creek
Receiving Water Type	Inland surface water

A. City of Angels (hereinafter Discharger) is the owner and operator of City of Angels Wastewater Treatment Plant (hereinafter Facility), a domestic wastewater tertiary treatment facility. City of Angels owns the property at 3000 Centennial Road, Angels, CA 95222, on which the Facility is located.

   For the purposes of this Order, references to the "discharger" or "permittee" in applicable federal and state laws, regulations, plans, or policy are held to be equivalent to references to the Discharger herein.

B. The Facility discharges wastewater to Angels Creek, a water of the United States. The current biosolids treatment and controls, land disposal of secondary effluent onsite, and tertiary effluent on to the Greenhorn Creek Golf Course are regulated by separate Order Nos. 98-110 and 98-098, which were adopted by the Regional Water Board on 17 April 1998, not incorporated by reference herein.

C. The Discharger filed a report of waste discharge and submitted an application for Waste Discharge Requirements (WDRs) and National Pollutant Discharge Elimination System (NPDES) permit on 3 February 2006. Supplemental information was requested on 31 August 2006 and received on 12 October 2006 and 9 January 2007. A site visit was conducted on 31 July 2005, to observe operations and collect additional data to develop permit limitations and conditions. The application was submitted in accordance with Federal Regulations, 40CFR 122.21 (e) and it was deemed complete on January 9, 2007.

II. FACILITY DESCRIPTION

Background Information

The Discharger owns and operates the City of Angels Wastewater Treatment Plant (hereafter Facility). The Discharger provides sewerage service for the community of the City of Angels, serving a population of approximately 3,441. The disposal of treated wastewater is accomplished via spray irrigation of pastureland on-site and on neighboring Greenhorn Creek Golf Course, and is regulated by Order Nos. 98-098 and 98-110. Order No. 98-110 requires that the Discharger maintain sufficient storage capacity to accommodate allowable wastewater flow, design seasonal precipitation[1], and ancillary inflow and infiltration during the nonirrigation season. The Discharger has documented through a feasibility study report titled, *Feasibility Study for Achieving Compliance with Wastewater Permit Requirements* (August 2002) that the critical element for effluent disposal to land is its effluent storage capacity. Currently, the effluent storage capacity of the Facility is not adequate to contain the amount of total water entering the system during a 100-year rainfall year. Due to this lack of adequate storage capacity, the Discharger nearly experienced unauthorized overflows from its storage pond in March and April 2005. The Discharger's Feasibility Study Report concludes that it is not cost effective for the City to expand its effluent storage capacity and recommends the City pursue approval of a surface water discharge. Therefore, the Discharger requested a surface water discharge

[1] Order No. 98-110 defines design seasonal precipitation as the total annual precipitation using a return period of 100 years, distributed monthly in accordance with historic rainfall patterns.

of tertiary treated effluent from the Facility to nearby Angels Creek during wet winter periods and only when the Creek flow to effluent flow ratio is at least 20:1. Angels Creek is a water of the United States, and a tributary to Stanislaus River within the Stanislaus River watershed.

This Order only regulates surface water discharge to Angels Creek, which may only occur from November 15 through May 15. The land disposal and reclamation are regulated by separate Orders.

A. Description of Wastewater and Biosolids Treatment or Controls

The current Facility design daily average flow capacity is 0.4 mgd and after the proposed plant expansion, the average dry weather flow capacity will be 0.6 mgd with a peak flow of 1.9 mgd. The peak influent wet weather flow expected is 3.1 mgd. The treatment system at the Facility consists of an ultrasonic influent flow meter, an automatic mechanical screen, two sequencing batch reactors, an intermediate storage basin, four sand filters, a chlorine contact chamber, a 3.0 million gallon influent flow equalization basin, a 66 million gallon storage pond (Holman Reservoir). Under the proposed treatment plant expansion, UV disinfection facilities will be added to the treatment process prior to any discharge to surface waters. Proposed disposal of the treated wastewater is accomplished via spray irrigation of pastureland on-site, spray irrigation on the neighboring Golf Course, and surface water discharge during winter/spring to nearby Angels Creek at Discharge Point-001 (see Attachment B).

Currently, the disposal of secondary effluent is accomplished solely by irrigation of only 61 acres (suitable for pasture irrigation) out of 235 acres available onsite. Spray irrigation on remaining acreage is not feasible due to setbacks to property boundaries, steep slopes, close proximity to watercourses, and access roads etc. Furthermore, spray irrigation year around is also not feasible because WDR 98-110 prohibits spray irrigation during periods of precipitation and for at least 24 hours after cessation of precipitation, and to reduce the threat of unauthorized wastewater runoff from the spray disposal area into nearby surface drainage. The disposal of chlorine disinfected tertiary effluent is accomplished, as and when needed, via spray irrigation of 110 acres on the Greenhorn Creek Golf Course. During wet years, wastewater flows exceeding the land disposal and storage capacity of the Facility are proposed to be treated to a tertiary level and discharged seasonally to Angels Creek via an outfall and diffuser. Sodium hypochlorite disinfection is used when effluent is discharged solely to golf course and the UV system will be used when the effluent is discharged to Angels Creek. The dual disinfection system will be piped such that chlorinated effluent cannot be discharged accidentally to Angeles Creek. An ‘air gap’ will be maintained between the chlorine and the UV effluent systems as a backflow prevention device.

Sludge is anaerobically digested and dewatered using drying beds. Dried biosolids are hauled to a landfill.

B. Discharge Points and Receiving Waters

1. The Facility is located in Section 3 and 10, T2N, R13E, MDB&M, as shown in Attachment B (Figure B-1), a part of this Order.

2. Tertiary treated municipal wastewater is discharged at Discharge Point -001 to Angels Creek, a water of the United States and a tributary to the Stanislaus River at a point Latitude 38°, 03', 26" N and longitude 120°, 32', 13" W. Angels Creek is within the Stanislaus River watershed management area.

C. Summary of Existing Requirements and Self-Monitoring Report (SMR) Data

Not Applicable. It is a new discharge.

D. Compliance Summary

On 23 June 2005 the Discharger was issued a Notice of Violation for inadequate storage freeboard limitations as well as for wastewater runoff from the spray disposal area into nearby surface drainage. WDRs Order No. 98-110 requires that the storage reservoir shall have sufficient capacity to accommodate allowable wastewater flow, ancillary inflow and infiltration, and the total annual precipitation using a return period of 100 years.

Because the storage reservoir does not have the capacity to comply with Discharge Specifications of WDRs Order No. 98-110, and to reduce the threat of unauthorized releases of wastewater to surface waters, and due to lack of additional disposal spray fields, an NPDES permit is considered justified.

E. Planned Changes – Not Applicable

III. APPLICABLE PLANS, POLICIES, AND REGULATIONS

The requirements contained in this Order are based on the applicable plans, policies, and regulations identified in section II of the Limitations and Discharge Requirements (Findings). This section provides supplemental information, where appropriate, for the plans, policies, and regulations relevant to the discharge.

A. Legal Authority

See Limitations and Discharge Requirements - Findings, Section II.C.

B. California Environmental Quality Act (CEQA)

The Regional Water Board determined that the proposed discharge to surface water, which may potentially reduce water quality, has been adequately subjected to the CEQA environmental analysis. The Discharger developed an Initial Study and Mitigated Negative Declaration dated November 18, 1997, which was subsequently amended on February 4, 2003. The CEQA document finds that the surface water discharge will

result in no significant impacts to water quality, based on the Facility discharging Title 22 treated effluent only during times of high stream flow.

C. State and Federal Regulations, Policies, and Plans

1. **Water Quality Control Plans**. The Regional Water Board adopted a *Water Quality Control Plan, Fourth Edition (Revised September 2004), for the Sacramento and San Joaquin River Basins* (Basin Plan) that designates beneficial uses, establishes water quality objectives, and contains implementation programs and policies to achieve those objectives for all waters addressed through the plan. In addition, State Water Board Resolution No. 88-63 requires that, with certain exceptions, the Regional Water Board assign the municipal and domestic supply use to water bodies that do not have beneficial uses listed in the Basin Plan. The beneficial uses of the Angels Creek downstream of the discharge are municipal and domestic supply; agricultural supply, including stock watering; hydropower generation; water contact recreation, including canoeing and rafting; non-contact water recreation, including aesthetic enjoyment; commercial and sport fishing; aquaculture; warm freshwater habitat; cold freshwater habitat; and wildlife habitat.

   The Basin Plan on page II-1.00 states: "*Protection and enhancement of existing and potential beneficial uses are primary goals of water quality planning…*" and with respect to disposal of wastewaters states that "...*disposal of wastewaters is [not] a prohibited use of waters of the State; it is merely a use which cannot be satisfied to the detriment of beneficial uses.*"

   The federal CWA section 101(a)(2), states: "*it is the national goal that wherever attainable, an interim goal of water quality which provides for the protection and propagation of fish, shellfish, and wildlife, and for recreation in and on the water be achieved by July 1, 1983.*" Federal Regulations, developed to implement the requirements of the CWA, create a rebuttable presumption that all waters be designated as fishable and swimmable. Federal Regulations, 40 CFR sections 131.2 and 131.10, require that all waters of the State regulated to protect the beneficial uses of public water supply, protection and propagation of fish, shell fish and wildlife, recreation in and on the water, agricultural, industrial and other purposes including navigation. Section 131.3(e), 40 CFR, defines existing beneficial uses as those uses actually attained after November 28, 1975, whether or not they are included in the water quality standards. Federal Regulation, 40 CFR section 131.10 requires that uses be obtained by implementing effluent limitations, requires that all downstream uses be protected and states that in no case shall a state adopt waste transport or waste assimilation as a beneficial use for any waters of the United States.

   This Order contains Effluent Limitations requiring a tertiary level of treatment, or equivalent, which is necessary to protect the beneficial uses of the receiving water. The Regional Water Board has considered the factors listed in CWC section 13241 in establishing these requirements, as discussed in more detail in the Fact Sheet, Attachment F, Section IV.C.3.r.iv.

2. **Antidegradation Policy.** Section 131.12 requires that the state water quality standards include an antidegradation policy consistent with the federal policy. The State Water Board established California's antidegradation policy in State Water Board Resolution No. 68-16. Resolution No. 68-16 incorporates the federal antidegradation policy where the federal policy applies under federal law. Resolution No. 68-16 requires that existing water quality be maintained unless degradation is justified based on specific findings. The Regional Water Board's Basin Plan implements, and incorporates by reference, both the State and federal antidegradation policies. As discussed in detail in the Fact Sheet (Attachment F, Section IV.D.4.) the discharge is consistent with the antidegradation provisions of 40 CFR section 131.12 and State Water Board Resolution 68-16.

3. **Anti-Backsliding Requirements.** Sections 402(o)(2) and 303(d)(4) of the CWA and federal regulations at title 40, Code of Federal Regulations section 122.44(l) prohibit backsliding in NPDES permits. These anti-backsliding provisions require that effluent limitations in a reissued permit must be as stringent as those in the previous permit, with some exceptions in which limitations may be relaxed. However, the anti-backsliding requirements do not apply to this permit because it is a new NPDES for the surface water discharge.

4. **Emergency Planning and Community Right to Know Act**. Section 13263.6(a), California Water Code, requires that "*the Regional Water Board shall prescribe effluent limitations as part of the waste discharge requirements of a POTW for all substances that the most recent toxic chemical release data reported to the state emergency response commission pursuant to Section 313 of the Emergency Planning and Community Right to Know Act of 1986 (42 U.S.C. Sec. 11023) (EPCRKA) indicate as discharged into the POTW, for which the State Water Board or the Regional Water Board has established numeric water quality objectives, and has determined that the discharge is or may be discharged at a level which will cause, have the reasonable potential to cause, or contribute to, an excursion above any numeric water quality objective*". However, the Regional Water Board has determined that no toxic chemical release data has been reported to the state emergency response commission for the discharge into the POTW.

5. **Stormwater Requirements.** USEPA promulgated Federal Regulations for storm water on 16 November 1990 in 40 CFR Parts 122, 123, and 124. The NPDES Industrial Storm Water Program regulates storm water discharges from wastewater treatment facilities. Wastewater treatment plants are applicable industries under the stormwater program and are obligated to comply with the Federal Regulations.

6. **Endangered Species Act.** This Order does not authorize any act that results in the taking of a threatened or endangered species or any act that is now prohibited, or becomes prohibited in the future, under either the California Endangered Species Act (Fish and Game Code sections 2050 to 2097) or the Federal Endangered Species Act (16 U.S.C.A. sections 1531 to 1544). This Order requires compliance with effluent limits, receiving water limits, and other requirements to protect the beneficial uses of waters of the state. The Discharger is responsible for meeting all requirements of the applicable Endangered Species Act.

7. ***Water Reuse Policy.*** The Basin Plan's Water Reuse Policy states, "*The Regional Water Board encourages the reclamation and reuse of wastewater…and requires as part of a Report of Waste Discharge an evaluation of reuse and land disposal options as alternative disposal methods. Reuse options should include consideration of the following, where appropriate, based on the quality of the wastewater and the required quality for the specific reuses: industrial and municipal supply, crop irrigation, landscape irrigation, ground water recharge, and wetland restoration*." The purpose of the Water Reuse Policy is to evaluate alternative methods of disposal to prevent unnecessary discharges to surface water.

   The Discharger disposes of treated wastewater via spray irrigation of pastureland on-site and on neighboring Greenhorn Creek Golf Course. The land discharge is regulated by Order Nos. 98-098 and 98-110. Order No. 98-110 requires that the Discharger maintain sufficient storage capacity to accommodate allowable wastewater flow, design seasonal precipitation, and ancillary inflow and infiltration during the nonirrigation season. The Discharger has documented through a feasibility study report titled, *Feasibility Study for Achieving Compliance with Wastewater Permit Requirements* (August 2002) that the critical element for effluent disposal to land is its effluent storage capacity, the disposal capacity is sufficient between the pastureland and Greenhorn Creek Golf Course. Currently, the effluent storage capacity of the Facility is not adequate to contain the amount of total water entering the system during a 100-year rainfall year. The near term effluent storage requirements are approximately 530 acre-feet for 100-year rainfall flows and the current storage capacity is only 202 acre-feet. Due to a lack of adequate storage capacity, the Discharger nearly experienced unauthorized overflows from its storage pond in March and April 2005.

   The Discharger evaluated several land disposal alternatives, such as expanding the existing effluent storage facilities, or constructing new facilities at new sites. In addition, potential factors to reduce wastewater flows were considered and their estimated impact on effluent storage requirements were estimated. The Feasibility Study Report concludes that it is not cost effective for the City to expand its effluent storage capacity and recommends the City pursue approval of a surface water discharge.

D. Impaired Water Bodies on CWA 303(d) List

Not Applicable

E. Other Plans, Polices and Regulations

1. The discharge authorized herein and the treatment and storage facilities associated with the discharge of treated municipal wastewater, except for discharges of residual sludge and solid waste, are exempt from the requirements of Title 27, California Code of Regulations (CCR), section 20005 *et seq*. (hereafter Title 27). The exemption, pursuant to Title 27 CCR section 20090(a), is based on the following:

a. The waste consists primarily of domestic sewage and treated effluent;

b. The waste discharge requirements are consistent with water quality objectives; and

c. The treatment and storage facilities described herein are associated with a municipal wastewater treatment plant.

IV. RATIONALE FOR EFFLUENT LIMITATIONS AND DISCHARGE SPECIFICATIONS

Effluent limitations and toxic and pretreatment effluent standards established pursuant to Sections 301 (Effluent Limitations), 302 (Water Quality Related Effluent Limitations), 304 (Information and Guidelines), and 307 (Toxic and Pretreatment Effluent Standards) of the Clean Water Act (CWA) and amendments thereto are applicable to the discharge.

The Federal CWA mandates the implementation of effluent limitations that are as stringent as necessary to meet water quality standards established pursuant to state or federal law [33 U.S.C., § 1311(b)(1)(C); 40 CFR, § 122.44(d)(1)]. NPDES permits must incorporate discharge limits necessary to ensure that water quality standards are met. This requirement applies to narrative criteria as well as to criteria specifying maximum amounts of particular pollutants. Pursuant to Federal Regulations, 40 CFR Section 122.44(d)(1)(i), NPDES permits must contain limits that control all pollutants that "*are or may be discharged at a level which will cause, have the reasonable potential to cause, or contribute to an excursion above any state water quality standard, including state narrative criteria for water quality*." Federal Regulations, 40 CFR, §122.44(d)(1)(vi), further provide that "[w]*here a state has not established a water quality criterion for a specific chemical pollutant that is present in an effluent at a concentration that causes, has the reasonable potential to cause, or contributes to an excursion above a narrative criterion within an applicable State water quality standard, the permitting authority must establish effluent limits.*"

The CWA requires point source discharges to control the amount of conventional, non-conventional, and toxic pollutants that are discharged into the waters of the United States. The control of pollutants discharged is established through effluent limitations and other requirements in NPDES permits. There are two principal bases for effluent limitations: 40 CFR §122.44(a) requires that permits include applicable technology-based limitations and standards, and 40 CFR §122.44(d) requires that permits include water quality-based effluent limitations to attain and maintain applicable numeric and narrative water quality criteria to protect the beneficial uses of the receiving water where numeric water quality objectives have not been established. The Regional Water Board's Basin Plan, page IV-17.00, contains an implementation policy ("Policy for Application of Water Quality Objectives" that specifies that the Regional Water Board "*will, on a case-by-case basis, adopt numerical limitations in orders which will implement the narrative objectives*." This Policy complies with 40 CFR §122.44(d)(1). With respect to narrative objectives, the Regional Water Board must establish effluent limitations using one or more of three specified sources, including (1) EPA's published water quality criteria, (2) a proposed state criterion (*i.e.*, water quality objective) or an explicit state policy interpreting its narrative water quality criteria (*i.e.*, the Regional

Water Board's "Policy for Application of Water Quality Objectives")(40 CFR 122.44(d)(1)(vi) (A), (B) or (C)), or (3) an indicator parameter. The Basin Plan contains a narrative objective requiring that: "*All waters shall be maintained free of toxic substances in concentrations that produce detrimental physiological responses in human, plant, animal, or aquatic life*" (narrative toxicity objective). The Basin Plan requires the application of the most stringent objective necessary to ensure that surface water and groundwater do not contain chemical constituents, discoloration, toxic substances, radionuclides, or taste and odor producing substances that adversely affect beneficial uses. The Basin Plan states that material and relevant information, including numeric criteria, and recommendations from other agencies and scientific literature will be utilized in evaluating compliance with the narrative toxicity objective. The Basin Plan also limits chemical constituents in concentrations that adversely affect surface water beneficial uses. For waters designated as municipal, the Basin Plan specifies that, at a minimum, waters shall not contain concentrations of constituents that exceed Maximum Contaminant Levels (MCL) of CCR Title 22. The Basin Plan further states that, to protect all beneficial uses, the Regional Water Board may apply limits more stringent than MCLs.

A. Discharge Prohibitions

1. *As stated in section I.G of Attachment D, Standard Provisions, this Order prohibits bypass from any portion of the treatment facility. Federal Regulations, 40 CFR 122.41 (m), define "bypass" as the intentional diversion of waste streams from any portion of a treatment facility. This section of the Federal Regulations, 40 CFR 122.41 (m)(4), prohibits bypass unless it is unavoidable to prevent loss of life, personal injury, or severe property damage. In considering the Regional Water Board's prohibition of bypasses, the State Water Board adopted a precedential decision, Order No. WQO 2002-0015, which cites the Federal Regulations, 40 CFR 122.41(m), as allowing bypass only for essential maintenance to assure efficient operation.*

2. Due to lack of wintertime storage capacity, direct discharge to Angeles Creek is permitted only if and when necessary to prevent unauthorized overflows from the storage pond during wet winters, and only during high stream flows when Angels Creek provides a flow ratio of at least 20:1 (Angels Creek: effluent). This flow ratio is based on the Discharger's Mitigated Negative Declaration, which finds that the discharge will result in no significant impacts to water quality due to the discharge of Title 22 treated effluent only during times of high stream flows. The discharge to Angels Creek is also prohibited when Holman Reservoir has more than 20 MG of available storage capacity to ensure the Discharger maximizes land disposal.

3. Initiation of discharge to Angels Creek is prohibited until the Discharger complies with Section VI.C.4.b., which includes requirements to meet all effluent and receiving water limitations, construct outfall and diffuser, and construct and operate UV disinfection system.

B. Technology-Based Effluent Limitations

1. Scope and Authority

Regulations promulgated in section 125.3(a)(1) of the Code of Federal regulations require technology-based effluent limitations for municipal Dischargers to be placed in NPDES permits based on Secondary Treatment Standards or Equivalent to Secondary Treatment Standards.

The Federal Water Pollution Control Act Amendments of 1972 (PL 92-500) established the minimum performance requirements for POTWs [defined in section 304(d)(1)]. Section 301(b)(1)(B) of that Act requires that such treatment works must, as a minimum, meet effluent limitations based on secondary treatment as defined by the USEPA Administrator.

Based on this statutory requirement, USEPA developed secondary treatment regulations, which are specified in Part 133. These technology-based regulations apply to all municipal wastewater treatment plants and identify the minimum level of effluent quality attainable by secondary treatment in terms of biochemical oxygen demand (BOD_5), total suspended solids (TSS), and pH.

In addition, The California Department of Health Services (DHS) has established statewide reclamation criteria in Title 22, CCR, for use of reclaimed water and has developed guidelines for discharges to surface waters. The Regional Water Board consults with the DHS on reclamation and surface water discharges in accordance with the terms specified in a Memorandum of Agreement between DHS and the State Water Board.

2. Applicable Technology-Based Effluent Limitations (TBEL)

a. **BOD_5 and TSS.** Federal Regulations, 40 CFR, Part 133, establish the minimum weekly and monthly average level of effluent quality attainable by secondary treatment for BOD_5 and TSS. Tertiary treatment is necessary to protect the beneficial uses of the receiving stream and the final effluent limitations for BOD_5 and TSS are based on the technical capability of the tertiary process. BOD_5 is a measure of the amount of oxygen used in the biochemical oxidation of organic matter. The secondary and tertiary treatment standards for BOD_5 and TSS are indicators of the effectiveness of the treatment processes. The principal design parameter for wastewater treatment plants is the daily BOD_5 and TSS loading rates and the corresponding removal rate of the system. In applying 40 CFR Part 133 for weekly and monthly average BOD_5 and TSS limitations, the application of tertiary treatment processes results in the ability to achieve lower levels for BOD_5 and TSS than the secondary standards currently prescribed; the 30-day average BOD_5 and TSS limitations have been revised to 10 mg/L, which is technically based on the capability of a tertiary system. In addition to the average weekly and average monthly effluent limitations, a daily maximum effluent limitation for BOD_5 and TSS is included in the Order to ensure that the treatment works are not organically overloaded and operate in accordance with

design capabilities. See Table F-2 for final technology-based effluent limitations required by this Order. In addition, 40 CFR 133.102, in describing the minimum level of effluent quality attainable by secondary treatment, states that the 30-day average percent removal shall not be less than 85 percent. If 85 percent removal of BOD_5 and TSS must be achieved by a secondary treatment plant, it must also be achieved by a tertiary (i.e., treatment beyond secondary level) treatment plant. This Order contains a limitation requiring an average of 85 percent removal of BOD_5 and TSS over each calendar month.

b. **Flow.** The Facility is designed to provide a tertiary level of treatment for up to a design flow of 1.9 mgd. Therefore, this Order contains an Average Daily Discharge Flow effluent limit of 1.9 mgd.

Summary of Technology-based Effluent Limitations
Discharge Point (Angels Creek– 001)

Table F-2. Summary of Technology-based Effluent Limitations

Parameter	Units	Effluent Limitations				
		Average Monthly	Average Weekly	Maximum Daily	Instantaneous Minimum	Instantaneous Maximum
5-Day BOD	mg/l	10		20		
	lbs/day[1]	158		317		
Total Suspended Solids	mg/l	10		20		
	lbs/day[1]	158		317		

1 Based on design flow of 1.9 mgd.

C. Water Quality-Based Effluent Limitations (WQBELs)

1. Scope and Authority

As specified in section 122.44(d)(1)(i), permits are required to include WQBELs for pollutants (including toxicity) that are or may be discharged at levels that cause, have reasonable potential to cause, or contribute to an in-stream excursion above any state water quality standard. The process for determining reasonable potential and calculating WQBELs when necessary is intended to protect the designated uses of the receiving water as specified in the Basin Plan, and achieve applicable water quality objectives and criteria that are contained in other state plans and policies, or any applicable water quality criteria contained in the CTR and NTR.

2. Applicable Beneficial Uses and Water Quality Criteria and Objectives

a. **Receiving Water.** The receiving stream is Angels Creek, which is tributary to the Stanislaus River. Based on the available information, the worst-case dilution is assumed to be zero to provide protection for the receiving water beneficial uses. The impact of assuming zero assimilative capacity within the receiving water is that discharge limitations are end-of-pipe limits with no allowance for dilution within the receiving water. Beneficial uses of Angels Creek, through application of 'Tributary Rule', are: municipal and domestic supply; agricultural

supply, including stock watering; hydropower generation; water contact recreation, including canoeing and rafting; non-contact water recreation, including aesthetic enjoyment; commercial and sport fishing; aquaculture; warm freshwater habitat; cold freshwater habitat; and wildlife habitat.

b. **Hardness.** While effluent limitations for hardness are not necessary in this Order, hardness is critical to the assessment of the need for, and the development of effluent limitations for certain metals. The *California Toxics Rule* and the *National Toxics Rule* contain water quality criteria for seven metals that vary as a function of hardness. The lower the hardness the lower the water quality criteria. The metals with hardness-dependent criteria include cadmium, copper, chromium III, lead, nickel, silver, and zinc.

This Order has established the criteria for hardness-dependent metals based on the reasonable worst-case ambient hardness as required by the SIP[2], the CTR[3] and State Water Board Order No. WQO 2008-0008 (City of Davis). The SIP and the CTR require the use of "receiving water" or "actual ambient" hardness, respectively, to determine effluent limitations for these metals. (SIP, § 1.2; 40 CFR § 131.38(c)(4), Table 4, note 4.) The CTR does not define whether the term "ambient," as applied in the regulations, necessarily requires the consideration of upstream as opposed to downstream hardness conditions. In some cases, the hardness of effluent discharges changes the hardness of the ambient receiving water. Therefore, where reliable, representative data are available, the hardness value for calculating criteria can be the downstream receiving water hardness, after mixing with the effluent (Order WQO 2008-0008, p. 11). The Regional Water Board thus has considerable discretion in determining ambient hardness (*Id.*, p.10.).

In this site-specific case, the discharge is prohibited from exceeding 5% of the receiving water. As discussed is Section c, below, the allowed dilution credit for acute and chronic aquatic toxicity criteria is 19, which is an effluent fraction of 5%. This defines the point in the receiving water (i.e., edge of mixing zone) that must be in compliance with aquatic toxicity criteria. The effluent hardness ranged from 39 mg/L to 99 mg/L(as CaCO3), based on 26 samples from December 2003 to January 2009. While the upstream receiving water hardness varied from 16 mg/L to 39 mg/L (as CaCO3), based on 21 samples from January 2003 to January 2009. When the effluent and receiving water are at their respective minimum observed hardness values (i.e. 39 mg/L and 16 mg/L as $CaCO_3$, respectively), and the effluent fraction is 5%, the mixed hardness is 17 mg/L (as $CaCO_3$). Therefore, a hardness of 17 mg/L (as $CaCO_3$) has been used in this Order for calculating hardness-dependent CTR metals criteria. The

[2] The SIP does not address how to determine the hardness for application to the equations for the protection of aquatic life when using hardness-dependent metals criteria. It simply states, in Section 1.2, that the criteria shall be properly adjusted for hardness using the hardness of the receiving water.

[3] The CTR requires that, for waters with a hardness of 400 mg/L (as $CaCO_3$), or less, the actual ambient hardness of the surface water must be used. It further requires that the hardness values used must be consistent with the design discharge conditions for design flows and mixing zones.

hardness used in this Order is representative of the range of hardness concentrations observed in the receiving water, which is consistent with the CTR and the SIP.

Table F-4, below, is an example demonstrating that protective effluent limitations result when using this hardness. In this example the mixed receiving water copper concentration does not exceed the mixed CTR criteria for copper. The same approach was used for calculating the effluent limitations for lead and zinc.

Table F-3: Copper Hardness Evaluation

Hardness			**17 mg/L (as $CaCO_3$)**
CTR Copper Chronic Criterion			**2.1 µg/L**
Dilution Credit			**19**
Maximum Background Copper			**1.1 µg/L**
Effluent Concentration Allowance (ECA) for Copper[1]			**20.1 µg/L**
Effluent Fraction	**Mixed Downstream Ambient Concentration**		
	Hardness[2] (mg/L) (as $CaCO_3$)	**Criteria[3] (µg/L)**	**Copper[4] (µg/L)**
1%	16.23	2.0	1.3
2%	16.46	2.0	1.5
3%	16.69	2.0	1.7
4%	16.92	2.0	1.9
5%	17.15	2.1	2.1

[1] Effluent Concentration Allowance calculated per Section 1.4 of the SIP.

[2] Mixed downstream ambient hardness is the mixture of the receiving water and effluent hardness using the lowest observed hardness values (i.e., 16 mg/L and 39 mg/L for the receiving water and effluent, respectively)

[3] Mixed downstream ambient criteria is the CTR chronic criteria calculated using the mixed hardness.

[4] Mixed downstream ambient copper concentration is the mixture of the receiving water and effluent copper concentrations using the maximum background copper concentration (i.e., 1.1 µg/L) and the effluent copper concentration at the ECA.

~~While no effluent limitation for hardness is necessary in this Order, hardness is critical to the assessment of the need for, and the development of, effluent limitations for certain metals. The *California Toxics Rule*, at (c)(4), states the following:~~

~~"Application of metals criteria. (i) *For purposes of calculating freshwater aquatic life criteria for metals from the equations in paragraph (b)(2) of this section, for waters with a hardness of 400 mg/L or less as calcium carbonate, the actual ambient hardness of the surface water shall be used in those equations.*" [emphasis added]~~

~~The State Water Board, in footnote 19 to Water Quality Order No. 2004-0013, stated: "*We note that…the Regional Water Board…applied a variable hardness value whereby effluent limitations will vary depending on the actual, current hardness values in the receiving water. We recommend that the Regional Water*~~

~~*Board establish either fixed or seasonal effluent limitations for metals, as provided in the SIP, rather than 'floating' effluent limitations.*"~~

~~Effluent limitations for the discharge must be set to protect the beneficial uses of the receiving water for all discharge conditions. In the absence of the option of including condition-dependent, "floating" effluent limitations that are reflective of actual conditions at the time of discharge, effluent limitations must be set using a reasonable worst-case condition in order to protect beneficial uses for all discharge conditions. For purposes of establishing water quality-based effluent limitations, a reported receiving water hardness value of 28 mg/L as $CaCO_3$ was used.~~

c. **Assimilative Capacity/Mixing Zone.** ~~Section 1.4.2.2 of the SIP requires that the Discharger provide information necessary for the Regional Water Board to make a determination on allowing a mixing zone, including the calculations for deriving the appropriate receiving water and effluent flows, and/or the results of a mixing zone study. The Discharger has not submitted the required mixing zone study. Due to the lack of adequate information regarding available assimilative capacity in the receiving water, the Regional Water Board has evaluated the need for WQBELs for pollutants without benefit of dilution in this Order. These water quality-based effluent limitations are based on the application of water quality criteria or objectives at the point of discharge to Angels Creek. The Discharger may elect, as a means of compliance, to conduct a mixing zone study to evaluate any available assimilative capacity. If requested, the Regional Water Board will review such studies and if warranted, may reopen this permit to make appropriate changes to the effluent limitations.~~ The CWA directs states to adopt water quality standards to protect the quality of its waters. USEPA's current water quality standards regulation authorizes states to adopt general policies, such as mixing zones, to implement state water quality standards (40 CFR 122.44 and 122.45). The USEPA allows states to have broad flexibility in designing its mixing zone policies. Primary policy and guidance on determining mixing zone and dilution credits is provided by the *Policy for Implementation of Toxics Standards for Inland Surface Waters, Enclosed Bays and Estuaries of California* (State Implementation Policy or SIP) and the Basin Plan. If no procedure applies in the SIP or the Basin Plan, then the Regional Water Board may use the USEPA *Technical Support Document for Water Quality-Based Toxics Control* (EPA/505/2-90-001) (TSD).

The allowance of mixing zones by the Regional Water Board is discussed in the Basin Plan, Policy for Application of Water Quality Objectives, which states in part, "*In conjunction with the issuance of NPDES and storm water permits, the Regional Board may designate mixing zones within which water quality objectives will not apply provided the discharger has demonstrated to the satisfaction of the Regional Board that the mixing zone will not adversely impact beneficial uses. If allowed, different mixing zones may be designated for different types of objectives, including, but not limited to, acute aquatic life objectives, chronic aquatic life objectives, human health objectives, and acute and chronic whole effluent toxicity objectives, depending in part on the averaging period over*

which the objectives apply. In determining the size of such mixing zones, the Regional Board will consider the applicable procedures and guidelines in the EPA's Water Quality Standards Handbook and the [TSD]. Pursuant to EPA guidelines, mixing zones designated for acute aquatic life objectives will generally be limited to a small zone of initial dilution in the immediate vicinity of the discharge."

Section 1.4.2 of the SIP states, in part, "…*with the exception of effluent limitations derived from TMDLs, in establishing and determining compliance with effluent limitations for applicable human health, acute aquatic life, or chronic aquatic life priority pollutant criteria/objectives or the toxicity objective for aquatic life protection in a basin plan, the Regional Board may grant mixing zones and dilution credits to dischargers ... The applicable priority pollutant criteria and objectives are to be met throughout a water body except within any mixing zone granted by the Regional Board. The allowance of mixing zones is discretionary and shall be determined on a discharge-by-discharge basis. The Regional Board may consider allowing mixing zones and dilution credits only for discharges with a physically identifiable point of discharge that is regulated through an NPDES permit issued by the Regional Board."*

For completely-mixed discharges, the Regional Water Board may grant a mixing zone and apply a dilution credit in accordance with Section 1.4.2.1 of the SIP. For incompletely-mixed discharges, the Discharger must perform a mixing zone study to demonstrate to the Regional Water Board that a dilution credit is appropriate. In granting a mixing zone, the SIP states that a mixing zone shall be as small as practicable, and meet the conditions provided in Section 1.4.2.2 as follows:

"*A mixing zone shall be as small as practicable. The following conditions must be met in allowing a mixing zone:*

A: A mixing zone shall not:

(1) compromise the integrity of the entire water body;
(2) cause acutely toxic conditions to aquatic life passing through the mixing zone;
(3) restrict the passage of aquatic life;
(4) adversely impact biologically sensitive or critical habitats, including, but not limited to, habitat of species listed under federal or State endangered species laws;
(5) produce undesirable or nuisance aquatic life;
(6) result in floating debris, oil, or scum;
(7) produce objectionable color, odor, taste, or turbidity;
(8) cause objectionable bottom deposits;
(9) cause nuisance;
(10) dominate the receiving water body or overlap a mixing zone from different outfalls; or
(11) be allowed at or near any drinking water intake. A mixing zone is not a source of drinking water. To the extent of any conflict between this

determination and the Sources of Drinking Water Policy (Resolution No. 88-63), this SIP supersedes the provisions of that policy."

The Discharger conducted a mixing zone study to determine if the discharge would be completely-mixed. The SIP defines a completely mixed discharge as, "…not more than a 5 percent difference, accounting for analytical variability, in the concentration of a pollutant exists across a transect of the water body at a point within two stream/river widths from the discharge point." The Discharger has not constructed an outfall, so a full scale prototype diffuser was used to conduct the mixing zone analysis. A dye study was conducted using surrogate effluent and fluorescent dye (Rhodamine WT). A surrogate effluent discharge was created by pumping water from a location in Angels Creek approximately 1,000 feet upstream of the proposed effluent discharge point. Angels Creek is 18 feet wide at the location of the diffuser. Dye measurements were collected at a transect 36 feet downstream of the diffuser (i.e. 2 stream widths). The study indicated that the discharge was at least 95% mixed across the transect, which demonstrates that the discharge was completely-mixed.

For completely-mixed discharges, the SIP states that, "…the amount of receiving water available to dilute the effluent shall be determined by calculating the dilution ratio (i.e., the critical receiving water flow divided by the effluent flow) using the appropriate flows in Table 3." This Order includes Discharge Prohibition III.E. that prohibits the discharge from May 16 through November 14 and unless Angels Creek flows provide a downstream flow ratio greater than or equal to 20:1 (Angels Creek flow : effluent) as a daily average. Since the discharge is seasonal and a 20:1 flow ratio is required, it is not appropriate to use the flows in Table 3 of the SIP. Rather, the dilution credits can be allowed up to 20:1, based on the discharge prohibition, because there is always at least a flow ratio of 20:1 (Angels Creek: Effluent).

Based on the mixing zone study, the discharge with a diffuser will be rapidly mixed with the receiving water. Complete mixing is expected to occur no more than two stream widths downstream of the diffuser. For human health criteria, and acute and chronic aquatic toxicity criteria, a dilution credit of 19 has been allowed. The mixing zone extends a maximum of 36 feet downstream of the diffuser (i.e. the point at which complete-mixing occurs). The dimensions of the mixing zone have been determined based on a full scale prototype. This Order requires an additional mixing zone study to confirm the dimensions of the mixing zone after construction and operation of the outfall diffuser.

The mixing zone is as small as practicable, will not compromise the integrity of the entire water body, restrict the passage of aquatic life, dominate the waterbody or overlap existing mixing zones from different outfalls. Because effluent discharge is limited to a maximum of five percent of the resulting receiving water flow, and discharge will occur though a multi-port, cross-stream diffuser at a location immediately upstream of a turbulent cascading section of Angels Creek (which facilitates mixing), the mixing zone is as small as practicable and the integrity of the water body downstream of the proposed

effluent discharge point will not be compromised in any way. The mixing zone extends no more than 36 feet from the diffuser. There are no drinking water intakes within the mixing zone and the mixing zone does not overlap a mixing zone from a different outfall.

The discharge will not cause acutely toxic conditions to aquatic life passing through the mixing zone, because the exposure periods will be very short and rapid mixing occurs. Angels Creek is a fast moving stream at the proposed point of discharge, so floating organisms will be exposed for a very short time. Furthermore, the discharge is rapidly mixed with the receiving water, so organisms will not be exposed to elevated concentrations of toxic pollutants unless they are holding right at the diffuser ports, which is highly unlikely. There are no obstructions that will limit the passage of aquatic life. Effluent will be discharged through a multi-port diffuser mounted on the downstream side of a low concrete stem wall to be installed in the streambed. The low cascade created by the stem wall is smaller than natural cascades in the creek, and therefore should pose no significant barrier to aquatic life movement in the creek.

The discharge will not adversely impact biologically sensitive or critical habitats, including, but not limited to, habitat of species listed under federal or State endangered species laws, because the mixing zone is very small and acutely toxic conditions will not occur in the mixing zone.

The discharge will not produce undesirable or nuisance aquatic life, result in floating debris, oil, or scum, produce objectionable color, odor, taste, or turbidity, cause objectionable bottom deposits, or cause nuisance, because the Order requires tertiary level treated effluent and a discharge rate of a maximum of 1 part effluent to 19 parts receiving water, which is not expected to produce undesirable or nuisance aquatic life. The effluent discharge occurs only in winter/spring, and in an area that is heavily shaded. With these limits and discharge prohibitions, objectionable biostimulation in the area where the effluent mixes into the creek water is not expected.

As suggested by the SIP, in determining the extent of or whether to allow a mixing zone and dilution credit, the Regional Water Board has considered the presence of pollutants in the discharge that are carcinogenic, mutagenic, teratogenic, persistent, bioaccumulative, or attractive to aquatic organisms, and concluded that the allowance of the mixing zone and dilution credit is adequately protective of the beneficial uses of the receiving water.

The mixing zone therefore complies with the SIP. The mixing zone also complies with the Basin Plan, which requires that the mixing zone not adversely impact beneficial uses. Beneficial uses will not be adversely affected for the same reasons discussed above. In determining the size of the mixing zone, the Regional Water Board has considered the procedures and guidelines in the EPA's Water Quality Standards Handbook, 2d Edition (updated July 2007), Section 5.1, and Section 2.2.2 of the Technical Support Document for Water Quality-based Toxics Control (TSD). The SIP incorporates the same guidelines.

The mixing zone is limited to a small zone of initial dilution in the immediate vicinity of the discharge. The TSD indicates that this limitation achieves the objectives of preventing lethality to passing organisms and preventing significant human health risks.

3. Determining the Need for WQBELs

a. CWA section 301 (b)(1) requires NPDES permits to include effluent limitations that achieve technology-based standards and any more stringent limitations necessary to meet water quality standards. Water quality standards include Regional Water Board Basin Plan beneficial uses and narrative and numeric water quality objectives, State Water Board-adopted standards, and federal standards, including the CTR and NTR. The Basin Plan includes numeric site-specific water quality objectives and narrative objectives for toxicity, chemical constituents, and tastes and odors. The narrative toxicity objective states: "*All waters shall be maintained free of toxic substances in concentrations that produce detrimental physiological responses in human, plant, animal, or aquatic life.*" (Basin Plan at III-8.00.) With regards to the narrative chemical constituents objective, the Basin Plan states that waters shall not contain chemical constituents in concentrations that adversely affect beneficial uses. At minimum, "…*water designated for use as domestic or municipal supply (MUN) shall not contain concentrations of chemical constituents in excess of the maximum contaminant levels (MCLs)*" in Title 22 of CCR. The narrative tastes and odors objective states: "*Water shall not contain taste- or odor-producing substances in concentrations that impart undesirable tastes or odors to domestic or municipal water supplies or to fish flesh or other edible products of aquatic origin, or that cause nuisance, or otherwise adversely affect beneficial uses.*"

b. Federal regulations require effluent limitations for all pollutants that are or may be discharged at a level that will cause or have the reasonable potential to cause, or contribute to an in-stream excursion above a narrative or numerical water quality standard. Based on information submitted as part of the application, in studies, and as directed by monitoring and reporting programs, the Regional Water Board finds that the discharge has a reasonable potential to cause or contribute to an in-stream excursion above a water quality standard for ammonia, bis(2-chloroethyl)ether, dichlorobromomethane, copper, lead, nitrate, nitrite and zinc. Water quality-based effluent limitations (WQBELs) for these constituents are included in this Order. A summary of the reasonable potential analysis (RPA) is provided in Table F-4, and a detailed discussion of the RPA for each constituent is provided below.

c. The Regional Water Board conducted the RPA in accordance with Section 1.3 of the SIP. Although the SIP applies directly to the control of CTR priority pollutants, the State Water Board has held that the Regional Water Board may use the SIP as guidance for water quality-based toxics control.[4] The SIP states

[4] See, Order WQO 2001-16 (Napa) and Order WQO 2004-0013 (Yuba City)

in the introduction "*The goal of this Policy is to establish a standardized approach for permitting discharges of toxic pollutants to non-ocean surface waters in a manner that promotes statewide consistency.*" Therefore, in this Order the RPA procedures from the SIP were used to evaluate reasonable potential for both CTR and non-CTR constituents.

d. WQBELs were calculated in accordance with section 1.4 of the SIP, as described in Attachment F, Section IV.C.4.

e. **Ammonia.** Untreated domestic wastewater contains ammonia. Nitrification is a biological process that converts ammonia to nitrite and nitrite to nitrate. Denitrification is a process that converts nitrate to nitrite or nitric oxide and then to nitrous oxide or nitrogen gas, which is then released to the atmosphere. The Discharger currently uses nitrification to remove ammonia from the waste stream. Inadequate or incomplete nitrification may result in the discharge of ammonia to the receiving stream. Ammonia is known to cause toxicity to aquatic organisms in surface waters. Discharges of ammonia would violate the Basin Plan narrative toxicity objective. Applying 40 CFR section 122.44(d)(1)(vi)(B), it is appropriate to use USEPA's Ambient National Water Quality Criteria for the Protection of Freshwater Aquatic Life for ammonia, which was developed to be protective of aquatic organisms.

USEPA's *Ambient Water Quality Criteria for the Protection of Freshwater Aquatic Life*, for total ammonia, recommends acute (1-hour average; criteria maximum concentration) standards based on pH and chronic (30-day average, criteria continuous concentration) standards based on pH and temperature. It also recommends a maximum four-day average concentration of 2.5 times the criteria continuous concentration. USEPA found that as pH increased, both the acute and chronic toxicity of ammonia increased. Salmonids were more sensitive to acute toxicity effects than other species. However, while the acute toxicity of ammonia was not influenced by temperature, it was found that invertebrates and young fish experienced increasing chronic toxicity effects with increasing temperature. Because Angels Creek has a beneficial use of cold freshwater habitat and the potential for the presence of salmonids and early fish life stages, the recommended criteria for waters where salmonids and early life stages are present were used. USEPA's recommended criteria are show below:

$$CCC_{30-day} = \left(\frac{0.0577}{1+10^{7.688-pH}} + \frac{2.487}{1+10^{pH-7.688}} \right) \times MIN\left(2.85, 1.45 \cdot 10^{0.028(25-T)}\right), \text{ and}$$

$$CMC = \left(\frac{0.275}{1+10^{7.204-pH}} + \frac{39.0}{1+10^{pH-7.204}} \right),$$

where T is in degrees Celsius

The maximum permitted effluent pH is 8.0. The Basin Plan objective for pH in the receiving stream is the range of 6.5 to 8.5. The maximum observed 30-day average effluent temperature during discharge season was 54.7ºF (12.6ºC), for

the 30-day periods ending late April. The maximum observed ~~30-day RSW-001~~ambient temperature was ~~57.9ºF (14.4~~15.5ºC~~)~~[5]~~, for the 30-day periods ending late April~~. Using a pH value of 8.0 and the ~~worst-case~~ maximum ambient temperature value~~s~~ of 15.5ºC~~57.9ºF (14.4ºC) on a 30-day basis during the discharge period~~, the resulting criteria are 5.62 mg/L (acute 1 hour), 2.28 mg/L (chronic 30-day), and 5.71 (chronic 4-day). Using an allowed dilution credit of 9 for acute and chronic aquatic toxicity criteria, the effluent limitations are ~~2.8~~21 mg/L (as N) for the average monthly effluent limitation and 55~~.6~~ mg/L (as N) for the maximum daily effluent limitation~~. Effluent Limitations for ammonia are included in this Order to assure the treatment process adequately nitrifies the waste stream to protect the aquatic habitat beneficial uses~~ (see Attachment F, Table F-5 for WQBEL calculations). There is currently insufficient effluent data to determine if the Facility can meet more stringent performance-based effluent limitations for ammonia. In future permit renewals, the effluent limitations may be reduced (i.e. made more stringent) based on Facility performance. This will ensure that an over allocation of the assimilative capacity is not allowed and ensures compliance with state and federal antidegradation requirements.

f. **Bis(2-chloroethyl)ether.** Bis(2-chloroethyl)ether is used primarily as one of several solvents in textile manufacturing, medicinals and pharmaceuticals, paints, lacquers and varnishes, etc. It is also used in fumigants, processing fats, waxes, greases, cellulose esters and insecticides. The CTR criterion for Human health protection for consumption of water and aquatic organisms is 0.031 µg/l and for consumption of aquatic organisms only is 1.4 µg/l.

The MEC for bis(2-chloroethyl)ether was 0.32 µg/L, based on 2 samples collected between December 2003 and July 2004, while the maximum observed upstream receiving water bis(2-chloroethyl)ether concentration was <0.~~7~~ 01 µg/L, based on ~~2~~ 3 samples collected between May 2003 and ~~December 2003~~October 2008. Therefore, the discharge has a reasonable potential to cause or contribute to an in-stream excursion above the CTR criterion for bis(2-chloroethyl)ether.

The arithmetic mean of the receiving water bis(2-chloroethyl)ether concentrations is 0.001~~7~~ µg/L. ~~The receiving water concentration has exceeded the criterion; therefore, there is no assimilative capacity for bis(2-chloroethyl)ether and the CTR criterion must be met at the point of discharge.~~ Using the allowed human health dilution credit of 19, ~~T~~this Order includes an AMEL and MDEL for bis (2-chloroethyl)ether of ~~0.031~~0.43 µg/L and ~~0.062~~0.86 µg/L, respectively, based on the CTR criterion for the protection of human health (See Attachment F, Table F10 for WQBEL calculations). There is currently insufficient effluent data to determine if the Facility can meet more stringent performance-based effluent limitations for bis(2-chloroethyl)ether. In future permit renewals, the effluent limitations may be reduced (i.e. made more stringent) based on Facility performance. This will ensure that an over allocation of the assimilative capacity is not allowed and ensures compliance with state and federal antidegradation requirements.

[5] There was insufficient receiving water temperature data to calculate a 30-day average temperature.

g. **Chlorine Residual.** The Discharger currently uses chlorine for disinfection of the effluent waste stream and plans to replace it with Ultra Violet light (UV) disinfection system prior to discharge to surface waters. However, the Discharger plans to continue to use chlorine for odor control and tertiary filter backwash, which could create toxic conditions to aquatic organisms if released in the surface water discharge. Therefore, due to this proposed chlorine use, there is a reasonable potential to cause or contribute to an exceedance of the Basin Plan's narrative toxicity objective in the receiving water. This Order includes MDEL and AMEL of 0.02 and 0.01 mg/L, respectively. The chlorine residual limitations required in this Order are protective of aquatic organisms in the undiluted discharge. If compliance is maintained, the Regional Water Board does not anticipate residual chlorine impacts to benthic organisms.

h. **Chloroform.** Municipal and domestic supply is a beneficial use of the receiving stream. The narrative toxicity objective and this beneficial use designation comprise a water quality standard applicable to pollutants in the receiving stream. The Basin Plan contains the *Policy for Application of Water Quality Objectives*, which provides that narrative objectives may be translated using numerical limits published by other agencies and organizations. The California Environmental Protection Agency (Cal/EPA) Office of Environmental Health Hazard Assessment (OEHHA) has published the Toxicity Criteria Database, which contains cancer potency factors for chemicals, including chloroform, that have been used as a basis for regulatory actions by the boards, departments and offices within Cal/EPA. The OEHHA cancer potency value for oral exposure to chloroform is 0.031 milligrams per kilogram body weight per day (mg/kg-day). By applying standard toxicological assumptions used by OEHHA and USEPA in evaluating health risks via drinking water exposure of 70 kg body weight and two liters per day water consumption, this cancer potency factor is equivalent to a concentration in drinking water of 1.1 µg/L (ppb) at the one-in-a-million cancer risk level. This risk level is consistent with that used by the Department of Health Services (DHS) to set *de minimis* risks from involuntary exposure to carcinogens in drinking water in developing MCLs and Action Levels and by OEHHA to set negligible cancer risks in developing Public Health Goals for drinking water. The one-in-a-million cancer risk level is also mandated by USEPA in applying human health protective criteria contained in the NTR and the CTR to priority toxic pollutants in California surface waters.

MUN is a designated beneficial use of the receiving water. However, there are no known drinking water intakes in Angels Creek for several miles downstream of the discharge, and chloroform is a non-conservative pollutant. Additionally, the existing chlorine disinfection facilities are the primary source of chloroform and they are scheduled to be replaced with UV disinfection system prior to discharge to Angeles Creek. Therefore, the Regional Water Board finds that, in this specific circumstance that the application of the USEPA MCL for total THMs for the effluent is appropriate, as long as the receiving water does not exceed the OEHHA cancer potency factor's equivalent receiving water concentration at a reasonable distance from the outfall.

The MEC for total THMs was 52.3 µg/L, based on two sampling events collected in December 2003 and July 2004. The MEC for chloroform was 46 µg/L during the same period. The discharge does not have a reasonable potential to cause or contribute to an in-stream excursion above the chemical constituents objective for MUN use by causing an exceedance of the USEPA primary MCL for total THMs. However, additional receiving water monitoring is required to determine whether the discharge has a reasonable potential to cause or contribute to an in-stream excursion above the chloroform OEHHA cancer potency factor's equivalent receiving water concentration. Therefore, effluent and receiving water monitoring for individual THMs are included in this Order.

i. **Copper.** The CTR includes hardness-dependent criteria for the protection of freshwater aquatic life for copper. The criteria for copper are presented in dissolved concentrations. USEPA recommends conversion factors to translate dissolved concentrations to total concentrations. The USEPA default conversion factors for copper in freshwater are 0.96 for both the acute and the chronic criteria. Using the reasonable worst-case ~~measured~~ estimated ambient hardness ~~from the effluent and receiving water~~ (~~28~~ 17 mg/L as $CaCO_3$) and the USEPA recommended dissolved-to-total translator, the applicable chronic criterion (maximum four-day average concentration) is ~~3.0~~2.1 µg/L and the applicable acute criterion (maximum one-hour average concentration) is ~~4.1~~2.6 µg/L, as total recoverable. The MEC for total copper was 10 µg/L, based on 2 samples collected between December 2003 and July 2004, while the maximum observed upstream receiving water total copper concentration was 1.1 µg/L, based on ~~2~~ 8 samples collected between May 2003 and ~~December 2003~~January 2008. Therefore, the discharge has a reasonable potential to cause or contribute to an in-stream excursion above the CTR criteria for copper. ~~Even though the receiving water appears to have assimilative capacity for copper, no dilution credit is allowed at this time due lack of mixing zone studies for the receiving water.~~ Using an allowable dilution credit of 19 for acute and chronic aquatic toxicity criteria, ~~A~~an AMEL and MDEL for total copper of ~~2.2~~16 µg/L and ~~4.3~~32 µg/L, respectively, are included in this Order based on CTR criteria for the protection of freshwater aquatic life (See Attachment F, Table F-6 for WQBEL calculations). There is currently insufficient effluent data to determine if the Facility can meet more stringent performance-based effluent limitations for copper. In future permit renewals, the effluent limitations may be reduced (i.e. made more stringent) based on Facility performance. This will ensure that an over allocation of the assimilative capacity is not allowed and ensures compliance with state and federal antidegradation requirements.

j. **Dichlorobromomethane.** The CTR includes a dichlorobromomethane criterion of 0.56 µg/L for the protection of human health and is based on a one-in-a-million cancer risk for waters from which both water and organisms are consumed. The MEC for dichlorobromomethane was 4.5 µg/L, based on 2 samples collected between December 2003 and July 2004, while the maximum observed upstream receiving water dichlorobromomethane concentration was less than 0.2 µg/L, based on 2 samples collected between May 2003 and December 2003. Therefore, the discharge has a reasonable potential to cause or contribute to an

in-stream excursion above the CTR criterion for dichlorobromomethane.

Using the allowed human health dilution credit of 19, ~~A~~an AMEL and MDEL for dichlorobromomethane of ~~0.56~~7.4 µg/L and ~~1.12~~15 µg/L, respectively, are included in this Order based on the CTR criterion for the protection of human health (See Attachment F, Table F-9 for WQBEL calculations). There is currently insufficient effluent data to determine if the Facility can meet more stringent performance-based effluent limitations for dichlorobromomethane. In future permit renewals, the effluent limitations may be reduced (i.e. made more stringent) based on Facility performance. This will ensure that an over allocation of the assimilative capacity is not allowed and ensures compliance with state and federal antidegradation requirements.

k. **Lead**. The CTR includes hardness-dependent standards for the protection of freshwater aquatic life for lead. The standards for metals are presented in dissolved concentrations. USEPA recommends conversion factors to translate dissolved concentrations to total concentrations. The conversion factors for lead in freshwater are 1.46203-[0.145712 X ln(hardness)] for both the acute and the chronic criteria. Using the reasonable worst-case ~~measured~~ estimated ambient hardness ~~from the effluent and receiving water~~ (~~28~~ 17 mg/L), the applicable chronic criterion (maximum four-day average concentration) is ~~0.6~~.33 µg/L and the applicable acute criterion (maximum one-hour average concentration) is ~~15.8~~8.6 µg/L, as total recoverable.

The MEC for total lead was 0.78 µg/L, based on 2 samples collected between December 2003 and July 2004, while the maximum observed upstream receiving water total lead concentration was 0.19 µg/L, based on ~~2~~ 8 samples collected between May 2003 and ~~December 2003~~January 2008. Therefore, the discharge has a reasonable potential to cause or contribute to an in-stream excursion above the CTR criteria for lead.

~~Even though the receiving water appears to have assimilative capacity for lead, no dilution credit is allowed at this time due lack of mixing zone studies for the receiving water.~~ Using a dilution credit of 19, ~~A~~an AMEL and MDEL for total lead of ~~0.51~~2.5 µg/L and ~~1.0~~5.0 µg/L, respectively, are included in this Order based on CTR criteria for the protection of freshwater aquatic life (See Attachment F, Table F7 for WQBEL calculations). There is currently insufficient effluent data to determine if the Facility can meet more stringent performance-based effluent limitations for lead. In future permit renewals, the effluent limitations may be reduced (i.e. made more stringent) based on Facility performance. This will ensure that an over allocation of the assimilative capacity is not allowed and ensures compliance with state and federal antidegradation requirements.

l. **Nitrate.** Nitrate is known to cause adverse health effects in humans. The Basin Plan's chemical constituents water quality objective prohibits chemical constituents in concentrations that exceed drinking water MCLs published in Title 22, CCR, or that adversely affect beneficial uses. MUN is a beneficial use of Angels Creek. The California DHS has adopted primary MCLs for the protection

of human health for nitrate that is equal to 10 mg/L (measured as nitrogen). Title 22, CCR, Table 64431-A, also includes a primary MCL of 10 mg/L for nitrate measured as nitrogen. The discharge from the Facility has a reasonable potential to cause or contribute to an in-stream excursion above water quality standards for nitrate because of the nitrification and denitrification processes. Effluent limitations for nitrate and nitrite are required pursuant to CWC Section 13263.6 (a). Effluent limits for nitrate is based on the MCLs. To ensure the treatment process adequately denitrifies the waste stream to protect the beneficial uses of municipal and domestic supply, this Order contains average monthly effluent limitations for nitrate of 10 mg/L (measured as nitrogen).

The maximum effluent concentration in the discharge for nitrate is 0.7 mg/L based on 2 samples collected between December 2003 and July 2004. Therefore, the Facility will be able to immediately comply with the effluent limitations.

m. **Nitrite.** Nitrite is known to cause adverse health effects in humans. The Basin Plan's chemical constituents water quality objective prohibits chemical constituents in concentrations that exceed drinking water MCLs published in Title 22, CCR, or that adversely affect beneficial uses. The California DHS has adopted primary MCLs for the protection of human health for nitrite that is equal to 1.0 mg/L (measured as nitrogen). Title 22, CCR, Table 64431-A, also includes a primary MCL of 1.0 mg/L for nitrite measured as nitrogen. This Order contains average monthly effluent limitations for nitrite of 1.0 mg/L (measured as nitrogen) and is based on the MCLs.

The maximum effluent concentration in the discharge for nitrite is <0.002 mg/L based on 2 samples collected between December 2003 and July 2004. Therefore, the Facility will be able to immediately comply with the effluent limitations.

n. **Pathogens**. The Discharger developed a mitigated negative declaration in accordance with CEQA for its proposed discharge of treated municipal wastewater to Angels Creek. The mitigated negative declaration includes a mitigation measure that requires the wastewater discharged to Angels Creek, during times of high stream flow, be treated to a level of treatment equivalent to Title 22 tertiary.

The California Department of Health Services (DHS) has developed reclamation criteria, CCR, Division 4, Chapter 3 (Title 22), for the reuse of wastewater. Title 22 requires that for spray irrigation of food crops, parks, playgrounds, schoolyards, and other areas of similar public access, wastewater be adequately disinfected, oxidized, coagulated, clarified, and filtered, and that the effluent total coliform levels not exceed 2.2 MPN/100 m/ as a 7-day median. As coliform organisms are living and mobile, it is impracticable to quantify an exact number of coliform organisms and to establish weekly average limitations. Instead, coliform organisms are measured as a most probable number and regulated based on a 7-day median limitation.

Coliform organisms are intended as an indicator of the effectiveness of the entire treatment train and the effectiveness of removing other pathogens. The method of treatment is not prescribed by this Order; however, wastewater must be treated to a level equivalent to that recommended by DHS. In addition to coliform testing, a turbidity effluent limitation has been included as a second indicator of the effectiveness of the treatment process and to assure compliance with the required level of treatment. The tertiary treatment process, or equivalent, is capable of reliably meeting a turbidity limitation of 2 nephelometric turbidity units (NTU) as a daily average. Failure of the filtration system such that virus removal is impaired would normally result in increased particles in the effluent, which result in higher effluent turbidity. Turbidity has a major advantage for monitoring filter performance, allowing immediate detection of filter failure and rapid corrective action. Coliform testing, by comparison, is not conducted continuously and requires several hours, to days, to identify high coliform concentrations. Therefore, to ensure compliance with the DHS recommended Title 22 disinfection criteria, weekly average effluent limitations are impracticable for turbidity.

This Order contains effluent limitations and a tertiary level of treatment, or equivalent, necessary to protect the beneficial uses of the receiving water. In accordance with CWC section 13241, the Regional Water Board has considered the following:

i. The past, present and probable future beneficial uses of the receiving stream include municipal and domestic supply, agricultural irrigation, agricultural stock watering, industrial process water supply, industrial service supply, body contact water recreation, other non-body contact water recreation, warm freshwater aquatic habitat, cold freshwater aquatic habitat, warm fish migration habitat, cold fish migration habitat, warm spawning habitat, wildlife habitat, and navigation.

ii. The environmental characteristics of the hydrographic unit, including the quality of the available water, will be improved by the requirement to provide tertiary treatment for this wastewater discharge. Tertiary treatment will allow for the reuse of the undiluted wastewater for food crop irrigation and contact recreation activities that would otherwise be unsafe according to recommendations from the California Department of Health Services (DHS).

iii. Fishable and swimmable water quality conditions can be reasonably achieved through the coordinated control of all factors that affect water quality in the area.

iv. The economic impact of requiring an increased level of treatment has been considered. The Discharger has estimated that the increased level of treatment will cost approximately $1.5 million. The loss of beneficial uses within downstream waters, without the tertiary treatment requirement, which includes prohibiting the irrigation of food crops and prohibiting public access for contact recreational purposes, would have a detrimental economic impact.

In addition to pathogen removal to protect irrigation and recreation, tertiary treatment may also aid in meeting discharge limitations for other pollutants, such as heavy metals, reducing the need for advanced treatment specific for those pollutants.

v. The requirement to provide tertiary treatment for this discharge will not adversely impact the need for housing in the area. The potential for developing housing in the area will be facilitated by improved water quality, which protects the contact recreation and irrigation uses of the receiving water. DHS recommends that, in order to protect the public health, relatively undiluted wastewater effluent must be treated to a tertiary level for contact recreational and food crop irrigation uses. Without tertiary treatment, the downstream waters could not be safely utilized for contact recreation or the irrigation of food crops.

vi. It is the Regional Water Board's policy, (Basin Plan, page IV-12.00, Policy 2) to encourage the reuse of wastewater. The Regional Water Board requires dischargers to evaluate how reuse or land disposal of wastewater can be optimized. The need to develop and use recycled water is facilitated by providing a tertiary level of wastewater treatment that will allow for a greater variety of uses in accordance with CCR, Title 22.

vii. The Regional Water Board has considered the factors specified in CWC section 13263, including considering the provisions in CWC section 13241, in adopting the disinfection and filtration requirements under Title 22 criteria. The Regional Water Board finds, on balance, that these requirements are necessary to protect the beneficial uses of Angels Creek, including water contact recreation and irrigation uses.

o. **pH.** The Basin Plan includes a water quality objective for surface waters (except for Goose Lake) that the "…*pH shall not be depressed below 6.5 nor raised above 8.5. Changes in normal ambient pH levels shall not exceed 0.5 in fresh waters with designated COLD or WARM beneficial uses.*" Since the ammonia effluent limitations are based on pH, with higher pH resulting in more stringent ammonia limitations, the Discharger has requested that the upper pH limitation be reduced from the Basin Plan's maximum of 8.5. Based on self-monitoring effluent data provided by the Discharger, the effluent pH ranged from 6.5 and 8.0. Therefore, instantaneous minimum and maximum effluent limitations for pH of 6.5 and 8.0, respectively, are included in this Order.

p. **Salinity.** The discharge contains total dissolved solids (TDS), chloride, sulfate, and electrical conductivity (EC). These are water quality parameters that are indicative of the salinity of the water. Their presence in water can be growth limiting to certain agricultural crops and can affect the taste of water for human consumption. There are no USEPA water quality criteria for the protection of aquatic organisms for these constituents. The Basin Plan contains a chemical constituent objective that incorporates State MCLs, contains a narrative objective, and contains numeric water quality objectives for EC, TDS, Sulfate,

and Chloride. In addition, there are USEPA water quality criteria for the protection of aquatic organisms for chloride. See Table F-3, below, for the applicable water quality objectives.

Table F-43. Salinity Water Quality Criteria/Objectives

Parameter	Agricultural WQ Goal[1]	Secondary MCL[3]	USEPA Water Quality Criteria	Effluent	
				Avg	Max
EC (µmhos/cm)	700[2]	900, 1600, 2200	N.A.	378	407
TDS (mg/L)	450[2]	500, 1000, 1500	N.A.	235	327
Sulfate (mg/L)	N/A	250, 500, 600	N.A.	22	23
Chloride (mg/L)	106[2]	250, 500, 600	230 (4-day) 860 (1-hr)	50	60

1 Agricultural water quality goals based on *Water Quality for Agriculture*, Food and Agriculture Organization of the United Nations—Irrigation and Drainage Paper No. 29, Rev. 1 (R.S. Ayers and D.W. Westcot, Rome, 1985)

2 Agricultural water quality goals listed provide no restrictions on crop type or irrigation methods for maximum crop yield. Higher concentrations may require special irrigation methods to maintain crop yields or may restrict types of crops grown.

3 The secondary MCLs are stated as a recommended level, upper level, and a short-term maximum level.

i. **Chloride**. The secondary MCL for chloride is 250 mg/L, as recommended level, 500 mg/L as an upper level, and 600 mg/L as a short-term maximum. The recommended agricultural water quality goal for chloride, that would apply the narrative chemical constituent objective, is 106 mg/L as a long-term average based on Water Quality for Agriculture, Food and Agriculture Organization of the United Nations—Irrigation and Drainage Paper No. 29, Rev. 1 (R.S. Ayers and D.W. Westcot, Rome, 1985). The 106 mg/L water quality goal is intended to protect against adverse effects on sensitive crops when irrigated via sprinklers.

Chloride concentrations in the effluent ranged from 40 mg/L to 60 mg/L, with an average of 50 mg/L, for 2 samples collected by the Discharger from December 2003 and July 2004. Background concentrations in Angels Creek averaged 3 mg/L from 2 samples collected by the Discharger from May 2003 through December 2003. Both the receiving water and the effluent are within the agricultural water quality goal of 106 mg/L and therefore, no effluent limitations for chloride are considered necessary.

ii. **Electrical Conductivity (EC)**. The secondary MCL for EC is 900 µmhos/cm as a recommended level, 1600 µmhos/cm as an upper level, and 2200 µmhos/cm as a short-term maximum. The agricultural water quality goal, that would apply the narrative chemical constituents objective, is 700 µmhos/cm as a long-term average based on Water Quality for Agriculture, Food and Agriculture Organization of the United Nations—

Irrigation and Drainage Paper No. 29, Rev. 1 (R.S. Ayers and D.W. Westcot, Rome, 1985). The 700 µmhos/cm agricultural water quality goal is intended to prevent reduction in crop yield, i.e. a restriction on use of water, for salt-sensitive crops, such as beans, carrots, turnips, and strawberries. These crops are either currently grown in the area or may be grown in the future. Most other crops can tolerate higher EC concentrations without harm, however, as the salinity of the irrigation water increases, more crops are potentially harmed by the EC, or extra measures must be taken by the farmer to minimize or eliminate any harmful impacts.

EC concentrations in the effluent samples collected from 7 December through 18 December 2006, averaged 378 µmhos/cm, with a minimum effluent level of 336 µmhos/cm, and a maximum effluent level of 407 µmhos/cm, based on the results of twelve samples. The background receiving water EC averaged 65 µmhos/cm from 2 sampling events collected by the Discharger from May 2003 through December 2003. Based on this data, the discharge does not have a reasonable potential to cause or contribute to an exceedance of the applicable water quality objectives for EC.

iii. **Sulfate**. The secondary MCL for sulfate is 250 mg/L as recommended level, 500 mg/L as an upper level, and 600 mg/L as a short-term maximum. Sulfate concentrations in the effluent ranged from 22 mg/L to 23 mg/L, with an average of 22.5 mg/L, for 2 samples collected by the Discharger from December 2003 through July 2004. Background concentrations in Angels Creek ranged from 2.1 mg/L to 3.2 mg/L, with an average of 2.6 mg/L, for 2 samples collected by the Discharger from May 2003 through December 2003. The effluent does not exceed the secondary MCL recommended level of 250 mg/L therefore, no effluent limitations for sulfate are considered necessary.

iv. **Total Dissolved Solids (TDS)**. The secondary MCL for TDS is 500 mg/L as a recommended level, 1000 mg/L as an upper level, and 1500 mg/L as a short-term maximum. The recommended agricultural water quality goal for TDS, that would apply the narrative chemical constituent objective, is 450 mg/L as a long-term average based on Water Quality for Agriculture, Food and Agriculture Organization of the United Nations—Irrigation and Drainage Paper No. 29, Rev. 1 (R.S. Ayers and D.W. Westcot, Rome, 1985). Water Quality for Agriculture evaluates the impacts of salinity levels on crop tolerance and yield reduction, and establishes water quality goals that are protective of the agricultural uses. The 450 mg/L water quality goal is intended to prevent reduction in crop yield, i.e. a restriction on use of water, for salt-sensitive crops. Only the most salt sensitive crops require irrigation water of 450 mg/L or less to prevent loss of yield. Most other crops can tolerate higher TDS concentrations without harm, however, as the salinity of the irrigation water increases, more crops are potentially harmed by the TDS, or extra measures must be taken by the farmer to minimize or eliminate any harmful impacts.

A review of the Discharger's monitoring reports for the samples collected from 7 December through 18 December 2006, indicates an average TDS effluent concentration of 235 mg/l, a minimum effluent concentration of 193 mg/l, and a maximum effluent concentration of 327 mg/l (based on 12 data points). The background receiving water TDS averaged 60 mg/L from 2 sampling events performed by the Discharger from May 2003 through December 2003. Based on this data, the discharge does not have a reasonable potential to cause or contribute to an exceedance of the applicable water quality objectives for TDS.

v. **Salinity Effluent Limitations.** Based on the relatively low reported salinity in the effluent, the discharge does not have reasonable potential to cause or contribute to an in-stream excursion of water quality objectives for salinity. However, since the receiving water is tributary to the Sacramento-San Joaquin Delta, of additional concern is the salt contribution to Delta waters. Therefore, this Order includes a performance-based effluent limitation of 510 µmhos/cm for EC as a monthly average to limit the discharge to current levels and requires the Discharger to develop a salinity evaluation and minimization plan to address sources of salinity from the domestic wastewater treatment system.

q. **Settleable Solids.** For inland surface waters, the Basin Plan states that "[w]ater shall not contain substances in concentrations that result in the deposition of material that causes nuisance or adversely affects beneficial uses." This Order contains average monthly and average daily effluent limitations for settleable solids.

Because the amount of settleable solids is measured in terms of volume per volume without a mass component, it is impracticable to calculate mass limitations for inclusion in this Order. A daily maximum effluent limitation for settleable solids is included in the Order, in lieu of a weekly average, to ensure that the treatment works operate in accordance with design capabilities.

r. **Toxicity.** See Section IV.C.5. of the Fact Sheet regarding whole effluent toxicity.

s. **Zinc.** The CTR includes hardness-dependent criteria for the protection of freshwater aquatic life for zinc. The criteria for zinc are presented in dissolved concentrations. USEPA recommends conversion factors to translate dissolved concentrations to total concentrations. The conversion factors for zinc in freshwater are 0.978 for the acute criteria and 0.986 for the chronic criteria. Using the reasonable worst-case estimated ambient hardness, (~~28~~ 17 mg/L as $CaCO_3$), the applicable chronic criterion (maximum four-day average concentration) and the applicable acute criterion (maximum one-hour average concentration) are both ~~40~~ 26.7 µg/L, as total recoverable.

The MEC for total zinc was 130 µg/L, based on 2 samples collected between December 2003 and July 2004, while the maximum observed upstream receiving water total zinc concentration was 2.0 µg/L, based on ~~2~~ 8 samples collected

between May 2003 and ~~December 2003~~January 2008. Therefore, the discharge has a reasonable potential to cause or contribute to an in-stream excursion above the CTR criteria for zinc. ~~Even though the receiving water appears to have assimilative capacity for zinc, no dilution credit is allowed at this time due lack of mixing zone studies for the receiving water.~~ Using an allowable dilution credit of 19 for acute and chronic aquatic toxicity criteria, ~~A~~an AMEL and MDEL for total zinc of ~~20~~ 250 µg/L and ~~41~~ 500 µg/L, respectively, are included in this Order based on CTR criteria for the protection of freshwater aquatic life (See Attachment F, Table F-8 for WQBEL calculations). There is currently insufficient effluent data to determine if the Facility can meet more stringent performance-based effluent limitations for zinc. In future permit renewals, the effluent limitations may be reduced (i.e. made more stringent) based on Facility performance. This will ensure that an over allocation of the assimilative capacity is not allowed and ensures compliance with state and federal antidegradation requirements.

Table F-54. Statistics for Effluent Constituents with Detectable Results

Parameter (units)	n[1]	cv[1]	RPA multiplier[1]	MEC[1]	B[1]	WQO/WQC[1]	Source	RP[2]
Bis(2-chloroethyl)ether (µg/L)	2	0.6	1	0.32	<0.017	0.031	NTR Human health	Y
Bis(2-ethylhexyl)phthalate) (µg/L)	2	0.6	1	<0.6	<0.8	1.8	NTR Human health	N
Dichlorobromomethane (µg/L)	2	0.6	1	4.5	<0.2	0.56	CTR Human Health	Y
Dibromochloromethane (µg/L)	2	0.6	1	N.D.	N.D.	0.41	CTR Human Health	N
Di-n-Octylphthalate (µg/L)	2	0.6	1	2.3	ND	3	California Secondary MCL	N
Chloroform (µg/L)	2	0.6	1	46	<0.31	1.1	CalEPA Cancer Potency Factor	I
Aluminum (µg/L)	2	0.6	1	50	60	87/750	USEPA Recommended WQ Criteria	N
Ammonia (mg/L)	2	0.6	1	9.4	0.04	1.02[3]	USEPA Recommended WQ Criteria	Y
Chloride (mg/L)	2	0.6	1	60	3.0	106	Agri. goal	N
Arsenic (µg/L)	2	0.6	1	0.4	0.2	10	USEPA Primary MCL	N
Antimony (µg/L)	2	0.6	1	0.6	<0.2	6	Primary MCL	N
Barium (µg/L)	2	0.6	1	7.8	20	1000	Calif Primary MCL	N
Berillium (µg/L)	2	0.6	1	<0.6	0.0	4	Calif Primary MCL	N
Chromium Total (µg/L)	2	0.6	1	0.7	0.6	50	USEPA Primary MCL	N
Copper (µg/L)	2	0.6	1	10	1.1	3.02.0[4]	CTR	Y
Cyanide	2	0.6	1	3.3	0.9	5.2		N
Fluoride (µg/L)	2	0.6	1	400	300	1000	Public Health Goal	I
Iron (µg/L)	2	0.6	1	80	290	300	Calif. Secondary MCL	N
Lead (µg/L)	2	0.6	1	0.78	0.19	0.35[4]	Calif Toxic Rule	Y
Mercury (ng/l)	2	0.6	1	0.0057	0.0025	50	CTR Human Health	I
Manganese (µg/L)	2	0.6	1	29	22	50	Calif. Secondary MCL	N
Nickel (µg/L)		0.6	1	2.6	0.9	81/735	Calif. Toxic Rule	N
Zinc ((µg/L)	2	0.6	1	130	2.0	4126[4]	Calif. Toxic Rule	Y
Tributylin (µg/L)	2	0.6	1	0.00046	ND	0.007	Ambient Water Quality	N
EC (µmhos/cm)[6]	2	0.6	1	407	70	900	Secondary MCL	N
Foaming Agents (MBAS)	2	0.6	1	20	20	500/500	Calif. Secondary MCL	N
Hardness mg/l as CaCo3	2	0.6	1	70	30	5000		N
Nitrate (mg/l)	2	0.6	1	0.7	0.8	10	Calif. Primary MCL	N
Sulfates (mg/l)	2	0.6	1	23	3.2	250	Calif. Secondary MCL	N
TDS (mg/L)[6]	2	0.6	1	327	60	450	Agricultural Goal	N

[1] n: number of data points available; cv: statistically determined coefficient of variation; RPA multiplier: 99th percentile multiplier; MEC: maximum effluent concentration; N.D. Not detected; B: background receiving water concentration; WQO/WQC: applicable water quality objective/water quality criteria.

[2] Reasonable Potential ? N: No, Y: Yes, I: Incomplete data

[3] The maximum Creek temperature (15.5°C) and maximum effluent pH (8.5) were used to calculate the criterion.

[4] Minimum Creek hHardness of 2817 mg/l as CaCO3 was used to calculate the criterion.

[5] Effluent and receiving water data from May 2003 and July 2004.

[6] Effluent data from sampling conducted between 7 December and 18 December 2006.

4. WQBEL Calculations

a. Effluent limitations for ammonia, bis(2-chloroethyl)ether, ~~chloroform,~~ copper, dichlorobromomethane, lead and zinc were calculated in accordance with section 1.4 of the SIP and the TSD. The following paragraphs describe the methodology used for calculating effluent limitations.

b. **Effluent Limitation Calculations.** In calculating maximum effluent limitations, the effluent concentration allowances were set equal to the criteria/standards/objectives.

$$ECA_{acute} = CMC \qquad ECA_{chronic} = CCC$$

For the human health, agriculture, or other long-term criterion/objective, a dilution credit can be applied. The ECA is calculated as follows:

$$ECA_{HH} = HH + D(HH - B)$$

where:

ECA_{acute} = effluent concentration allowance for acute (one-hour average) toxicity criterion

$ECA_{chronic}$ = effluent concentration allowance for chronic (four-day average) toxicity criterion

ECA_{HH} = effluent concentration allowance for human health, agriculture, or other long-term criterion/objective

CMC = criteria maximum concentration (one-hour average)

CCC = criteria continuous concentration (four-day average, unless otherwise noted)

HH = human health, agriculture, or other long-term criterion/objective

D = dilution credit

B = maximum receiving water concentration

Acute and chronic toxicity ECAs were then converted to equivalent long-term averages (LTA) using statistical multipliers and the lowest is used. Additional statistical multipliers were then used to calculate the maximum daily effluent limitation (MDEL) and the average monthly effluent limitation (AMEL).

Human health ECAs are set equal to the AMEL and a statistical multiplier is used to calculate the MDEL.

$$AMEL = mult_{AMEL}\left[\min\left(\overbrace{M_A ECA_{acute}}^{LTA_{acute}}, \underbrace{M_C ECA_{chronic}}_{LTA_{chronic}}\right)\right]$$
$$MDEL = mult_{MDEL}\left[\min\left(M_A ECA_{acute}, M_C ECA_{chronic}\right)\right]$$

$$MDEL_{HH} = \left(\frac{mult_{MDEL}}{mult_{AMEL}}\right) AMEL_{HH}$$

where: $mult_{AMEL}$ = statistical multiplier converting minimum LTA to AMEL
$mult_{MDEL}$ = statistical multiplier converting minimum LTA to MDEL
M_A = statistical multiplier converting CMC to LTA
M_C = statistical multiplier converting CCC to LTA

Water quality-based effluent limitations were calculated for, ammonia, Bis(2-chloroethyl)ether, dichlorobromomethane, copper, lead and zinc as follows in Tables F-6 through F-11, below.

Table F-6~~5~~: WQBEL Calculations for Ammonia

	Acute	30-day Avg Chronic	4-day Avg Chronic
pH [1]	8.0	~~7.2~~8.0	N/A
Temperature °C [2]	N/A	~~14.7~~15.5	N/A
Criteria (mg/L) [3]	5.6	~~5.39~~2.28	5.71
Dilution Credit	~~No Dilution~~9	~~No Dilution~~9	9
ECA	~~5.6~~57.09	~~5.39~~22.66	56.93
ECA Multiplier	0.321	~~0.527~~0.780	0.527
LTA [4]	~~1.8~~18.0	~~2.8~~17.7	30.03
AMEL Multiplier (95th%)	[5]~~1.55~~	1.19[5]	[5]
AMEL (mg/L)	[5]~~**2.8**~~	**21**[5]	[5]
MDEL Multiplier (99th%)	[5]~~3.11~~	3.11[5]	[5]
MDEL (mg/L)	[5]~~**5.6**~~	**55**[5]	[5]

(1) Acute and chronic design pH = 8.0 (max. allowed effluent pH)~~, Chronic design pH = median receiving stream pH~~
(2) Temperature = Maximum ~~30-day average seasonal effluent~~receiving water temperature
(3) USEPA Ambient Water Quality Criteria
(4) LTA developed based on Acute and Chronic ECA Multipliers per sections 5.4.1 and 5.5.4 of TSD.
(5) Limitations based on ~~acute~~ 30-day average chronic LTA ($LTA_{\cancel{acute}chronic_30} < LTA_{chronic_4} < LTA_{acute}$)

Table F-7~~6~~: WQBEL Calculations for Copper

	Acute	Chronic
Criteria, dissolved (µg/L) [1]	~~4.1~~2.5	~~3.0~~2.0
Dilution Credit	~~No Dilution~~19	~~No Dilution~~19
Translator [2]	0.96	0.96
ECA, total recoverable [3]	~~4.3~~31.8	~~3.12~~20.1
ECA Multiplier [4]	0.321	0.527
LTA	~~1.4~~10.2	~~1.6~~10.6
AMEL Multiplier (95th%) [5][6]	1.55	[8]
AMEL (µg/L)	~~**2.2**~~**16**	[8]
MDEL Multiplier (99th%) [7]	3.11	[8]
MDEL (µg/L)	~~**4.3**~~**32**	[8]

(1) CTR aquatic life criteria, based on a hardness of ~~28~~ 17 mg/L as $CaCO_3$.
(2) EPA Translator used as default.
(3) ECA calculated per section 1.4.B, Step 2 of SIP.
(4) Acute and Chronic ECA Multiplier calculated at 99th percentile per section 1.4.B, Step 3 of SIP ~~or per sections 5.4.1 and 5.5.4 of the TSD~~.

(5) Assumes sampling frequency n= <4.
(6) The probability basis for AMEL is 95th percentile per section 1.4.B, Step 5 of SIP ~~or section 5.5.4 of the TSD~~.
(7) The probability basis for MDEL is 99th percentile per section 1.4.B, Step 5 of SIP ~~or section 5.5.4 of the TSD~~.
(8) Limitations based on acute LTA (Chronic LTA > Acute LTA)
~~(9) MDEL exceeds Basin Plan site-specific objective for copper (3.9 µg/l).~~

Table F-8~~7~~: WQBEL Calculations for Lead

	Acute	Chronic
Criteria, dissolved (µg/L) (1)	~~15.8~~9.0	~~0.6~~0.33
Dilution Credit	~~No Dilution~~19	~~No Dilution~~19
Translator (2)	~~0.976~~1.049	~~0.976~~1.049
ECA, total recoverable (3)	~~16~~167.5	~~0.63~~3.1
ECA Multiplier (4)	0.321	0.527
LTA	~~5~~53.8	~~0.331~~1.61
AMEL Multiplier (95th%) (5)(6)	(8)	1.55
AMEL (µg/L)	(8)	~~0.51~~**2.5**
MDEL Multiplier (99th%) (7)	(8)	3.11
MDEL (µg/L)	(8)	~~1.0~~**5.0**

(1) CTR aquatic life criteria, based on a hardness of ~~28~~ 17 mg/L as $CaCO_3$.
(2) EPA Translator used as default.
(3) ECA calculated per section 1.4.B, Step 2 of SIP. This allows for the consideration of dilution.
(4) Acute and Chronic ECA Multiplier calculated at 99th percentile per section 1.4.B, Step 3 of SIP ~~or per sections 5.4.1 and 5.5.4 of the TSD~~.
(5) Assumes sampling frequency n= <4.
(6) The probability basis for AMEL is 95th percentile per section 1.4.B, Step 5 of SIP ~~or section 5.5.4 of the TSD~~.
(7) The probability basis for MDEL is 99th percentile per section 1.4.B, Step 5 of SIP ~~or section 5.5.4 of the TSD~~.
(8) Limitations based on chronic LTA (Chronic LTA < Acute LTA)

Table F-9~~8~~: WQBEL Calculations for Zinc

	Acute	Chronic
Criteria, dissolved (µg/L) (1)	~~40~~26	~~40~~26
Dilution Credit	~~No Dilution~~19	~~No Dilution~~19
Translator (2)	0.978	~~0.986~~0.978
ECA, total recoverable (3)	~~41~~496	~~41~~496
ECA Multiplier (4)	0.321	0.527
LTA	~~13.1~~159	~~21.5~~262
AMEL Multiplier (95th%) (5)(6)	1.55	(8)
AMEL (µg/L)	~~20~~**250**	(8)
MDEL Multiplier (99th%) (7)	3.11	(8)
MDEL (µg/L)	~~41~~**500**	(8)

(1) CTR aquatic life criteria, based on a hardness of ~~28~~ 17 mg/L as $CaCO_3$.
(2) EPA Translator used as default.
(3) ECA calculated per section 1.4.B, Step 2 of SIP. This allows for the consideration of dilution.
(4) Acute and Chronic ECA Multiplier calculated at 99th percentile per section 1.4.B, Step 3 of SIP ~~or per sections 5.4.1 and 5.5.4 of the TSD~~.
(5) Assumes sampling frequency n= <4.
(6) The probability basis for AMEL is 95th percentile per section 1.4.B, Step 5 of SIP ~~or section 5.5.4 of the TSD~~.
(7) The probability basis for MDEL is 99th percentile per section 1.4.B, Step 5 of SIP ~~or section 5.5.4 of the TSD~~.
(8) Limitations based on acute LTA (Acute LTA < Chronic LTA)

Table F-109: WQBEL Calculations for Dichlorobromomethane

	Acute	Chronic
Criteria (mg/L)	N/A	0.56
Dilution Credit	N/A	No Dilution19
ECA	N/A	0.567.4
AMEL (mg/L) [1]	N/A	**0.567.4**
MDEL/AMEL Multiplier[2]	N/A	2.01
MDEL (mg/L)	N/A	**1.1215**

[1] AMEL = ECA per section 1.4.B, Step 6 of SIP
[2] Assumes sampling frequency n<=4. Uses MDEL/AMEL multiplier from Table 2 of SIP.

Table F-110: WQBEL Calculations for Bis(2-chloroethyl)ether

	Acute	Chronic
Criteria (mg/L)	N/A	0.031
Dilution Credit	N/A	No Dilution19
ECA	N/A	0.0310.43
AMEL (mg/L) [1]	N/A	**0.0310.43**
MDEL/AMEL Multiplier[2]	N/A	2.01
MDEL (mg/L)	N/A	**0.0620.86**

[1] AMEL = ECA per section 1.4.B, Step 6 of SIP
[2] Assumes sampling frequency n<=4. Uses MDEL/AMEL multiplier from Table 2 of SIP.

Summary of Water Quality-based Effluent Limitations
Discharge Point (Angeles Creek – 001)

Table F-121. Summary of Water Quality-Based Effluent Limitations

Parameter	Units	Effluent Limitations				
		Average Monthly	Average Weekly	Maximum Daily	Instantaneous Minimum	Instantaneous Maximum
Ammonia	mg/l	2.821	--	5.656		
Electrical Conductivity	µmhos/c	510	--	--		
Nitrate	mg/l	10		--		
Nitrite	mg/l	1		--		
Bis(2-chloroethyl)ether	µg/l	0.0310.43		0.0620.86		
Dichlorobromomethane	µg/l	0.567.4	--	1.1215		
Copper	µg/l	2.216	--	4.332		
Lead	µg/l	0.512.5		1.05.0		
Zinc	µg/l	20250	--	41500		

5. Whole Effluent Toxicity (WET)

For compliance with the Basin Plan's narrative toxicity objective, this Order requires the Discharger to conduct whole effluent toxicity testing for acute and chronic toxicity, as specified in the Monitoring and Reporting Program (Attachment E, Section V.). This Order also contains effluent limitations for acute toxicity and requires the Discharger to implement best management practices to investigate the causes of, and identify corrective actions to reduce or eliminate effluent toxicity.

a. **Acute Aquatic Toxicity.** The Basin Plan states that "…*effluent limits based upon acute biotoxicity tests of effluents will be prescribed where appropriate*…". Effluent limitations for acute toxicity have been included in this Order.

b. **Chronic Aquatic Toxicity.** The Basin Plan contains a narrative toxicity objective that states, "All waters shall be maintained free of toxic substances in concentrations that produce detrimental physiological responses in human, plant, animal, or aquatic life." (Basin Plan at III-8.00) Adequate WET data is not available to determine if the discharge has reasonable potential to cause or contribute to an in-stream excursion above of the Basin Plan's narrative toxicity objective. Attachment E of this Order requires quarterly chronic WET monitoring for demonstration of compliance with the narrative toxicity objective.

   In addition to WET monitoring, Special Provisions VI.C.2.a. requires the Discharger to submit to the Regional Water Board an Initial Investigative TRE Work Plan for approval by the Executive Officer, to ensure the Discharger has a plan to immediately move forward with the initial tiers of a TRE, in the event effluent toxicity is encountered in the future. The provision also includes a numeric toxicity monitoring trigger and requirements for accelerated monitoring, as well as, requirements for TRE initiation if a pattern of toxicity is demonstrated.

D. Final Effluent Limitations

1. Mass-based Effluent Limitations.

Title 40 CFR 122.45(f)(1) requires effluent limitations be expressed in terms of mass, with some exceptions, and 40 CFR 122.45(f)(2) allows pollutants that are limited in terms of mass to additionally be limited in terms of other units of measurement. This Order includes effluent limitations expressed in terms of mass and concentration. In addition, pursuant to the exceptions to mass limitations provided in 40 CFR 122.45(f)(1), some effluent limitations are not expressed in terms of mass, such as pH and temperature, and when the applicable standards are expressed in terms of concentration (e.g. CTR criteria and MCLs) and mass limitations are not necessary to protect the beneficial uses of the receiving water.

Mass-based effluent limitations were calculated based upon the permitted average daily discharge flow allowed in Section IV.A.1.f of the Limitations and Discharge Requirements.

2. Averaging Periods for Effluent Limitations.

Title 40 CFR 122.45 (d) requires average weekly and average monthly discharge limitations for publicly owned treatment works (POTWs) unless impracticable. However, for toxic pollutants and pollutant parameters in water quality permitting, the US EPA recommends the use of a maximum daily effluent limitation in lieu of average weekly effluent limitations for two reasons. "*First, the basis for the 7-day average for POTWs derives from the secondary treatment requirements. This basis is not related to the need for assuring achievement of water quality standards. Second, a 7-day average, which could comprise up to seven or more daily samples, could average out peak toxic concentrations and therefore the discharge's potential for causing acute toxic effects would be missed.*" (TSD, pg. 96) This Order utilizes maximum daily effluent limitations in lieu of average weekly effluent limitations for ammonia, chlorine residual, copper, zinc, Bis(2-chloroethyl)ether, and dichlorobromomethaneas recommended by the TSD for the achievement of water quality standards and for the protection of the beneficial uses of the receiving stream. Furthermore, for BOD, TSS, pH, coliform, and turbidity, weekly average effluent limitations have been replaced or supplemented with effluent limitations utilizing shorter averaging periods. The rationale for using shorter averaging periods for these constituents is discussed in Attachment F, Section IV.C.3., above.

3. Satisfaction of Anti-Backsliding Requirements.

~~Not Applicable. It is a new discharge.~~ The Clean Water Act specifies that a revised permit may not include effluent limitations that are less stringent than the previous permit unless a less stringent limitation is justified based on exceptions to the anti-backsliding provisions contained in Clean Water Act sections 402(o) or 303(d)(4), or, where applicable, 40 CFR 122.44(*l*).

Some effluent limitations in this revised Order are less stringent that those in the originally adopted Order. As discussed below this relaxation of effluent limitations is consistent with the anti-backsliding requirements of the CWA and federal regulations.

In the original permit, Order No. R5-2007-0031, the water quality-based effluent limitations (WQBELs) for dichlorobromomethane, bis(2-chloroethyl)ether, copper, lead, zinc, and ammonia, were established without the benefit of dilution. In the revised Order, Order No. R5-2007-0031-01, the effluent limitations for these constituents have been recalculated using allowable dilution credits as explained in Section IV.C.2.c of the Fact Sheet. This has resulted in less stringent effluent limitations in Order No. R5-2007-0031-01. Anti-backsliding requirements are satisfied, however, pursuant to CWA section 402(o)(2)(B), where the documentation of an actual dilution factor for the receiving water determined since adoption of the original permit, qualifies as new information which was not available at the issuance of the original permit.

The changes in effluent limits for dichlorobromomethane, bis(2-chloroethyl)ether, copper, lead, zinc, and ammonia in the revised permit are based on new information

generated since adoption of the original permit, and are consistent with the antidegradation provisions of 40 CFR 131.12 and State Water Resources Control Board Resolution 68-16, as described in Section IV.D.4, below.

4. Satisfaction of Antidegradation Policy

A wastewater treatment facility which produces a waste or increased concentration of waste and which discharges or proposes to discharge to existing high quality waters is required to meet requirements which will result in the best practicable treatment or control of the discharge necessary to assure that a pollution or nuisance will not occur, and to ensure the highest water quality consistent with the maximum benefit to the people of the State will be maintained.

The predominant method of disposal for the Facility is to land, which is regulated by WDR Order 98-110. Order 98-110 requires the Discharger to provide sufficient disposal and storage capacity be maintained to accommodate allowable wastewater flow, including seasonal precipitation and ancillary inflow and infiltration that could occur during a 100-year rainfall year. Due to population increases within the City, the Facility does not have sufficient storage capacity to accommodate a 100-year rainfall year and nearly experienced an unauthorized discharge to surface waters in March and April 2005. The Basin Plan includes a water reuse policy (page IV-14.00) that "*encourages the reclamation and reuse of wastewater…and requires as part of a Report of Waste Discharge an evaluation of reuse and land disposal options as alternative disposal methods.*" The Discharger developed a study to evaluate the feasibility of increasing its effluent storage capacity to allow continued land disposal. The feasibility study indicated that it is not economically feasible to continue year-round land disposal. Therefore, the Discharger has requested a surface water discharge to Angels Creek to allow a seasonal discharge to surface waters during wet winters.

This Order requires the Discharger to maximize land discharge prior to discharging to surface waters discharge, which is only allowed seasonally (15 November – 15 May). To protect beneficial uses of the receiving water, this Order requires a flow ratio greater than or equal to 20:1 (Angels Creek : effluent) when discharging to Angels Creek and ~~does not grant dilution for any constituents (i.e., compliance at the end of pipe). Furthermore, this Order~~ requires that the wastewater is fully oxidized, coagulated, filtered, and adequately disinfected pursuant to the DHS reclamation criteria, California Code of Regulations, Title 22, Division 4, Chapter 3, (Title 22), or equivalent and requires stringent effluent limitations to reduce concentrations of pollutants where reasonable potential was determined. Additionally, this Order requires the Discharger to construct an outfall to Angels Creek with a diffuser to provide for adequate mixing in the receiving water and requires the installation of UV disinfection prior to initiation of discharge to Angels Creek.

A discussion of the constituents of concern is provided below:

- **Organic Constituents of Concern**. With regard to the chlorine disinfection by-products, chloroform and dichlorobromomethane, the transition to a UV

disinfection process associated with the tertiary treatment system will result in a significant reduction in the concentration of these constituents. With regard to bis(2-chloroethyl)ether, the criteria are based upon protection of human health for consumption of water and aquatic organisms only. The effluent limits in this Order for bis(2-chloroethyl)ether result in ~~effluent~~ receiving water concentrations ~~which are less than the ambient concentrations identified in the Angels Creek~~that do not exceed the applicable water quality objectives.

- **Inorganic Constituents of Concern.** Effluent ~~concentration~~ limits for ammonia, nitrate, nitrite, copper, lead, and zinc are included in this Order for the protection of aquatic life. Effluent limits for these constituents result in receiving water concentrations that do not exceed the applicable water quality objectives. ~~have been established in this Order to ensure the discharge does not cause or contribute to an exceedance of these water quality objectives in the receiving water.~~

- **Temperature, DO, Turbidity, and Salinity.** With regard to temperature, dissolved oxygen, and turbidity, the discharge will only occur during times of high stream flows (i.e. during wet winters), therefore, the discharge will result in no significant changes in temperature, dissolved oxygen, or turbidity in Angels Creek. With regard~~s~~ to salinity, based on the low reported salinity in the effluent, the discharge does not have reasonable potential to cause or contribute to an in-stream excursion of water quality objectives for salinity. However, since the receiving water is tributary to the Sacramento-San Joaquin Delta, of additional concern is the salt contribution to Delta waters. Allowing the Discharger to increase its current salt loading may be contrary to the Region wide effort to address salinity in the Central Valley. Therefore, this Order includes a performance-based effluent limitation of 510 µmhos/cm for EC as a monthly average to limit the discharge to current levels.

The estimated degradation caused by the discharge is negligible at the end of the short mixing zone (i.e. approximately 36 feet) and non-detectable in New Melones Reservoir and further downstream waters. This is due the limited time, limited amount, and high quality of the tertiary treated effluent discharge relative to the 2.4 million acre-foot storage volume of New Melones Reservoir and its annual inflow of water from the Stanislaus River. The increase in volume and mass of pollutants from the new discharge will not have significant impacts on aquatic life, municipal and domestic supply, and recreation uses, which are the beneficial uses most likely affected by the pollutants discharged. The proposed discharge to Angeles Creek will not cause a violation of water quality objectives. The proposed discharge will result in some minimal degradation of waters of the state and navigable waters of the United States, but in this case, such degradation is consistent with the maximum benefit to the people of the state. Limited degradation that does not cause exceedance of water quality objectives is warranted to allow for the economic benefit stemming from local growth. In this case, the City of Angels is growing and continued treatment of wastewater is necessary to protect water quality and accommodate growth. The Regional Water Board does not have the jurisdiction to control growth in the City of Angels, but is required to assure that the discharge is

adequately treated. Thise proposed Order allows wastewater utility service necessary to accommodate housing and economic expansion in the area, and is considered to be a benefit to the people of the State. Additionally, the receiving water has not been designated by the State as an "Outstanding National Resource Waters". Compliance with these requirements will result in the use of best practicable treatment or control of the discharge and the impact on existing water quality will be insignificant.

Summary of Final Effluent Limitations
Discharge Point (Angels Creek – 001)
Table F-132. Summary of Final Effluent Limitations

Parameter	Units	Effluent Limitations				
		Average Monthly	Average Weekly	Maximum Daily	Instantaneous Minimum	Instantaneous Maximum
5-Day BOD	mg/l	10	15	20		
	lbs/day[1]	158	238	317		
Total Suspended Solids	mg/l	10	15	20		
	lbs/day[1]	158	238	317		
Settleable Solids	ml/l	0.1		0.2		
Electrical Conductivity	umhos/cm	510	--	--		
pH	Std. Units	--	--	--	6.5	8.0
Ammonia	mg/l	2.821		5.656		
	lbs/day[1]	44333		89872		
Chlorine Residual	mg/l	0.01		0.02		
Nitrate	mg/l	10		--		
	lbs/day[1]	158				
Nitrite	mg/l	1		--		
	lbs/day[1]	15.9				
Bis(2-chloroethyl)ether	µg/l	0.0431		0.0862		
Dichlorobromomethane	µg/l	0.567.4	--	1.115		
Copper	µg/l	2.216	--	4.332		
Lead	µg/l	0.512.5		1.05.0		
Zinc	µg/l	20250	--	41500		

1 Based on a design flow of 1.9 million gallons per day

a. **Percent Removal:** The average monthly percent removal of BOD 5-day 20°C and total suspended solids shall not be less than 85 percent.

b. **Acute Whole Effluent Toxicity.** Survival of aquatic organisms in 96-hour bioassays of undiluted waste shall be no less than:

   i. 70%, minimum for any one bioassay; and
   ii. 90%, median for any three consecutive bioassays.

c. **Turbidity.** Effluent turbidity shall not exceed:

   i. 2 NTU, as a daily average; and
   ii. 5 NTU, more than 5% of the time within a 24-hour period.

iii. 10 NTU at any time

d. **Total Coliform Organisms.** Effluent total coliform organisms shall not exceed:

i. 2.2 most probable number (MPN) per 100 mL, as a 7-day median;
ii. 23 MPN/100 mL, more than once in any 30-day period; and
iii. 240 MPN/100ml at any time.

e. **Average Daily Discharge Flow.** The Average Daily Discharge Flow shall not exceed 1.9 mgd.

E. Interim Effluent Limitations

Not Applicable

F. Land Discharge Specifications

Not Applicable

G. Reclamation Specifications

Not Applicable

V. RATIONALE FOR RECEIVING WATER LIMITATIONS

Basin Plan water quality objectives to protect the beneficial uses of surface water and groundwater include numeric objectives and narrative objectives, including objectives for chemical constituents, toxicity, and tastes and odors. The toxicity objective requires that surface water and groundwater be maintained free of toxic substances in concentrations that produce detrimental physiological responses in humans, plants, animals, or aquatic life. The chemical constituent objective requires that surface water and groundwater shall not contain chemical constituents in concentrations that adversely affect any beneficial use or that exceed the maximum contaminant levels (MCLs) in Title 22, CCR. The tastes and odors objective states that surface water and groundwater shall not contain taste- or odor-producing substances in concentrations that cause nuisance or adversely affect beneficial uses. The Basin Plan requires the application of the most stringent objective necessary to ensure that surface water and groundwater do not contain chemical constituents, toxic substances, radionuclides, or taste and odor producing substances in concentrations that adversely affect domestic drinking water supply, agricultural supply, or any other beneficial use.

A. Surface Water

1. CWA section 303(a-c), requires states to adopt water quality standards, including criteria where they are necessary to protect beneficial uses. The Regional Water Board adopted water quality criteria as water quality objectives in the Basin Plan. The Basin Plan states that "*[t]he numerical and narrative water quality objectives define the least stringent standards that the Regional Board will apply to regional waters in order to protect the beneficial uses*." The Basin Plan includes numeric and

narrative water quality objectives for various beneficial uses and water bodies. This Order contains Receiving Surface Water Limitations based on the Basin Plan numerical and narrative water quality objectives for biostimulatory substances, chemical constituents, color, dissolved oxygen, floating material, oil and grease, pH, pesticides, radioactivity, salinity, sediment, settleable material, suspended material, tastes and odors, temperature, toxicity, turbidity, and electrical conductivity.

Numeric Basin Plan objectives for bacteria, dissolved oxygen, pH, temperature, and turbidity are applicable to this discharge and have been incorporated as Receiving Surface Water Limitations. Rational for these numeric receiving surface water limitations are as follows:

a. **Ammonia.** The Basin Plan states that, "[w]*aters shall not contain un-ionized ammonia in amounts which adversely affect beneficial uses.*

b. **Bacteria.** Angels Creek has been designated as having the beneficial use of contact recreation (REC-1). For water bodies designated as having REC-1 as a beneficial use, the Basin Plan includes a water quality objective limiting the "…*fecal coliform concentration based on a minimum of not less than five samples for any 30-day period*…" to a maximum geometric mean of 23 MPN/100 ml. The objective also states that "…[no] *more than ten percent of the total number of samples taken during any 30-day period* [shall] *exceed 240/100 ml*." This objective is included in the Order as a receiving water limitation.

c. **Biostimulatory Substances**. The Basin Plan includes a water quality objective that "*[W]ater shall not contain biostimulatory substances which promote aquatic growths in concentrations that cause nuisance or adversely affect beneficial uses."* Receiving Water Limitations for biostimulatory substances are included in this Order and are based on the Basin Plan objective.

d. **Color**. The Basin Plan includes a water quality objective that "*[W]ater shall be free of discoloration that causes nuisance or adversely affects beneficial uses."* Receiving Water Limitations for color are included in this Order and are based on the Basin Plan objective.

e. **Chemical Constituents**. The Basin Plan includes a water quality objective that *"[W]aters shall not contain chemical constituents in concentrations that adversely affect beneficial uses."* Receiving Water Limitations for chemical constituents are included in this Order and are based on the Basin Plan objective.

f. **Dissolved Oxygen.** The Angels Creek has been designated as having the beneficial use of cold freshwater aquatic habitat (COLD). For water bodies designated as having COLD as a beneficial use, the Basin Plan includes a water quality objective of maintaining a minimum of 7.0 mg/L of dissolved oxygen. Since the beneficial use of COLD does apply to the Angels Creek, a receiving water limitation of 7.0 mg/L for dissolved oxygen was included in this Order.

   For surface water bodies outside of the Delta, the Basin Plan includes the water

quality objective that "…*the monthly median of the mean daily dissolved oxygen (DO) concentration shall not fall below 85 percent of saturation in the main water mass, and the 95 percentile concentration shall not fall below 75 percent of saturation.*" This objective was included as a receiving water limitation in this Order.

g. **Floating Material**. The Basin Plan includes a water quality objective that *"[W]ater shall not contain floating material in amounts that cause nuisance or adversely affect beneficial uses."* Receiving Water Limitations for floating material are included in this Order and are based on the Basin Plan objective.

h. **Oil and Grease**. The Basin Plan includes a water quality objective that *"[W]aters shall not contain oils, greases, waxes, or other materials in concentrations that cause nuisance, result in a visible film or coating on the surface of the water or on objects in the water, or otherwise adversely affect beneficial uses."* Receiving Water Limitations for oil and grease are included in this Order and are based on the Basin Plan objective.

i. **pH.** The Basin Plan includes water quality objective that *"[T]he pH shall not be depressed below 6.5 nor raised above 8.5. Changes in normal ambient pH levels shall not exceed 0.5 in fresh waters with designated COLD or WARM beneficial uses*". This Order includes receiving water limitations for both pH range and pH change.

   The Basin Plan allows an appropriate averaging period for pH change in the receiving stream. Since there is no technical information available that indicates that aquatic organisms are adversely affected by shifts in pH within the 6.5 to 8.5 range, an averaging period is considered appropriate and a monthly averaging period for determining compliance with the 0.5 receiving water pH limitation is included in this Order.

j. **Pesticides**. The Basin Plan includes a water quality objective for pesticides beginning on page III-6.00. Receiving Water Limitations for pesticides are included in this Order and are based on the Basin Plan objective.

k. **Radioactivity**. The Basin Plan includes a water quality objective that *"[R]adionuclides shall not be present in concentrations that are harmful to human, plant, animal or aquatic life nor that result in the accumulation of radionuclides in the food web to an extent that presents a hazard to human, plant, animal or aquatic life."* The Basin Plan states further that *"[A]t a minimum, waters designated for use as domestic or municipal supply (MUN) shall not contain concentrations of radionuclides in excess of the maximum contaminant levels (MCLs) specified in Table 4 (MCL Radioactivity) of Section 64443 of Title 22 of the California Code of Regulations…"* Receiving Water Limitations for radioactivity are included in this Order and are based on the Basin Plan objective.

l. **Sediment.** The Basin Plan includes a water quality objective that *"[T]he suspended sediment load and suspended sediment discharge rate of surface*

waters shall not be altered in such a manner as to cause nuisance or adversely affect beneficial uses" Receiving Water Limitations for suspended sediments are included in this Order and are based on the Basin Plan objective.

m. **Settleable Material.** The Basin Plan includes a water quality objective that *"[W]aters shall not contain substances in concentrations that result in the deposition of material that causes nuisance or adversely affects beneficial uses."* Receiving Water Limitations for settleable material are included in this Order and are based on the Basin Plan objective.

n. **Suspended Material.** The Basin Plan includes a water quality objective that *"[W]aters shall not contain suspended material in concentrations that cause nuisance or adversely affect beneficial uses."* Receiving Water Limitations for suspended material are included in this Order and are based on the Basin Plan objective.

o. **Taste and Odors**. The Basin Plan includes a water quality objective that *"[W]ater shall not contain taste- or odor-producing substances in concentrations that impart undesirable tastes or odors to domestic or municipal water supplies or to fish flesh or other edible products of aquatic origin, or that cause nuisance, or otherwise adversely affect beneficial uses."* Receiving Water Limitations for taste- or odor-producing substances are included in this Order and are based on the Basin Plan objective.

p. **Temperature.** The Angels Creek has the beneficial uses of both COLD and WARM. The Basin Plan includes the objective that "[a]*t no time or place shall the temperature of COLD or WARM intrastate waters be increased more than 5ºF above natural receiving water temperature*." This Order includes a receiving water limitation based on this objective.

q. **Toxicity**. The Basin Plan includes a water quality objective that *"[A]ll waters shall be maintained free of toxic substances in concentrations that produce detrimental physiological responses in human, plant, animal, or aquatic life."* Receiving Water Limitations for toxicity are included in this Order and are based on the Basin Plan objective.

r. **Turbidity.** The Basin Plan includes a water quality objective that "*[I]ncreases in turbidity attributable to controllable water quality factors shall not exceed the following limits:*

- *Where natural turbidity is between 0 and 5 Nephelometric Turbidity Units (NTUs), increases shall not exceed 1 NTU.*
- *Where natural turbidity is between 5 and 50 NTUs, increases shall not exceed 20 percent.*
- *Where natural turbidity is between 50 and 100 NTUs, increases shall not exceed 10 NTUs.*

- *Where natural turbidity is greater than 100 NTUs, increases shall not exceed 10 percent*."

A numeric Receiving Surface Water Limitation for turbidity is included in this Order and is based on the Basin Plan objective for turbidity.

B. Groundwater

Not Applicable

VI. RATIONALE FOR MONITORING AND REPORTING REQUIREMENTS

Section 122.48 requires that all NPDES permits specify requirements for recording and reporting monitoring results. Water Code sections 13267 and 13383 authorizes the Regional Water Board to require technical and monitoring reports. The Monitoring and Reporting Program (MRP), Attachment E of this Order, establishes monitoring and reporting requirements to implement federal and state requirements. The following provides the rationale for the monitoring and reporting requirements contained in the MRP for this facility.

A. Influent Monitoring

1. Influent monitoring is required to collect data on the characteristics of the wastewater and to assess compliance with effluent limitations (*e.g.*, BOD and TSS reduction requirements).

B. Effluent Monitoring

1. Pursuant to the requirements of 40 CFR §122.44(i)(2) effluent monitoring is required for all constituents with effluent limitations. Effluent monitoring is necessary to assess compliance with effluent limitations, assess the effectiveness of the treatment process, and to assess the impacts of the discharge on the receiving stream.

2. The SIP states that if "…*all reported detection limits of the pollutant in the effluent are greater than or equal to the C* [water quality criterion or objective] *value, the RWQCB* [Regional Water Board] *shall establish interim requirements…that require additional monitoring for the pollutant….*" All reported detection limits for constituents listed in Attachment E are greater than or equal to corresponding applicable water quality criteria or objectives. Monitoring for these constituents has been included in this Order in accordance with the SIP.

C. Whole Effluent Toxicity Testing Requirements

1. **Acute Toxicity.** Quarterly 96-hour bioassay testing is required to demonstrate compliance with the effluent limitation for acute toxicity.

2. **Chronic Toxicity.** Quarterly chronic whole effluent toxicity testing is required in order to demonstrate compliance with the Basin Plan's narrative toxicity objective.

D. Receiving Water Monitoring

1. Surface Water

a. Receiving water monitoring is necessary to assess compliance with receiving water limitations and to assess the impacts of the discharge on the receiving stream.

2. Groundwater

Not Applicable.

E. Other Monitoring Requirements

1. Biosolids Monitoring

Not Applicable.

2. Water Supply Monitoring

Water supply monitoring is required to evaluate the source of constituents in the wastewater.

VII. RATIONALE FOR PROVISIONS

A. Standard Provisions

Standard Provisions, which apply to all NPDES permits in accordance with section 122.41, and additional conditions applicable to specified categories of permits in accordance with section 122.42, are provided in Attachment D. The discharger must comply with all standard provisions and with those additional conditions that are applicable under section 122.42.

Section 122.41(a)(1) and (b) through (n) establish conditions that apply to all State-issued NPDES permits. These conditions must be incorporated into the permits either expressly or by reference. If incorporated by reference, a specific citation to the regulations must be included in the Order. Section 123.25(a)(12) allows the state to omit or modify conditions to impose more stringent requirements. In accordance with section 123.25, this Order omits federal conditions that address enforcement authority specified in sections 122.41(j)(5) and (k)(2) because the enforcement authority under the Water Code is more stringent. In lieu of these conditions, this Order incorporates by reference Water Code section 13387(e).

B. Special Provisions

1. Reopener Provisions

a. **Mercury Monitoring Requirements.** The Discharger's effluent contains mercury, a bioaccumulative pollutant, and therefore has a reasonable potential to cause or contribute to an exceedance of the narrative water quality objective. There is inadequate information to establish limitations for mercury. The Discharger is required to monitor and report mercury concentrations in accordance with Attachment E. After receipt of twelve months of monitoring data, this Order may be reopened and an effluent limit established for mercury.

   Additionally, if mercury is found to be causing toxicity based on acute or chronic toxicity test results, or if a TMDL for mercury is adopted, this Order shall be reopened and a mass effluent limitation or an effluent concentration limitation imposed.

b. **Chloroform.** This Order requires the Discharger to conduct effluent and receiving water monitoring of chloroform concentrations in accordance with Attachment E. If the monitoring data indicates that the discharge has a reasonable potential to cause or contribute to an in-stream excursion above the chloroform OEHHA cancer potency factor, this Order may be reopened and a limit established for chloroform.

c. **Salinity Evaluation and Minimization Plan.** This Order requires the Discharger prepare salinity evaluation and minimization plan for salinity. This reopener provision allows the Regional Water Board to reopen this Order for addition and/or modification of effluent limitations and requirements for salinity based on a review of the salinity evaluation and minimization plan.

d. **Whole Effluent Toxicity.** This Order requires the Discharger to investigate the causes of, and identify corrective actions to reduce or eliminate effluent toxicity through a Toxicity Reduction Evaluation (TRE). This Order may be reopened to include a numeric chronic toxicity limitation, a new acute toxicity limitation, and/or a limitation for a specific toxicant identified in the TRE. Additionally, if a numeric chronic toxicity water quality objective is adopted by the State Water Board, this Order may be reopened to include a numeric chronic toxicity limitation based on that objective.

e. **Water Effects Ratio (WER) and Metal Translators.** A default WER of 1.0 has been used in this Order for calculating CTR criteria for applicable priority pollutant inorganic constituents. In addition, default dissolved-to-total metal translators have been used to convert water quality objectives from dissolved to total recoverable when developing effluent limitations for copper and zinc. If the Discharger performs studies to determine site-specific WERs and/or site-specific dissolved-to-total metal translators, this Order may be reopened to modify the effluent limitations for the applicable inorganic constituents.

f. **Mixing Zone Study.** Prior to allowing dilution credits for certain pollutants, SIP (Section 1.4.2.2) requires the Discharger to submit receiving water mixing zone studies. Therefore, the Discharger is allowed a choice, as a means of compliance, to conduct a mixing zone study to evaluate any available assimilative capacity in Angels Creek. If and when requested by the Discharger, the Regional Water Board will review such studies and if warranted, may reopen this permit to make appropriate changes to the effluent limitations. However, the CEQA document prepared by the Discharger finds that the new surface water discharge will result in no significant impacts to water quality, based on the Facility discharging Title 22 treated effluent only during times of high stream flow. Therefore, additional environmental analysis may be required in order for the Regional Water Board to allow a mixing zone and dilution.

g. **Hardness Based Effluent Limitations**. If the Regional Water Board implements a new policy for calculating hardness-based effluent limitations, this Order may be reopened to modify the effluent limitations for the applicable hardness-based constituents.

2. Special Studies and Additional Monitoring Requirements

a. **Chronic Whole Effluent Toxicity Requirements.** The Basin Plan contains a narrative toxicity objective that states, "All waters shall be maintained free of toxic substances in concentrations that produce detrimental physiological responses in human, plant, animal, or aquatic life." (Basin Plan at III-8.00.) Adequate WET data is not available to determine if the discharge has reasonable potential to cause or contribute to an in-stream excursion above of the Basin Plan's narrative toxicity objective. Attachment E of this Order requires Quarterly chronic WET monitoring for demonstration of compliance with the narrative toxicity objective.

In addition to WET monitoring, this provision requires the Discharger to submit to the Regional Water Board an Initial Investigative TRE Work Plan for approval by the Executive Officer, to ensure the Discharger has a plan to immediately move forward with the initial tiers of a TRE, in the event effluent toxicity is encountered in the future. The provision also includes a numeric toxicity monitoring trigger and requirements for accelerated monitoring, as well as, requirements for TRE initiation if a pattern of toxicity is demonstrated.

Monitoring Trigger. A numeric toxicity monitoring trigger of > 1 TUc (where TUc = 100/NOEC) is applied in the provision, because this Order does not allow any dilution for the chronic condition. Therefore, a TRE is triggered when the effluent exhibits a pattern of toxicity at 100% effluent.

Accelerated Monitoring. The provision requires accelerated WET testing when a regular WET test result exceeds the monitoring trigger. The purpose of accelerated monitoring is to determine, in an expedient manner, whether there is a pattern of toxicity before requiring the implementation of a TRE. Due to possible seasonality of the toxicity, the accelerated monitoring should be

performed in a timely manner, preferably taking no more than 2 to 3 months to complete.

The provision requires accelerated monitoring consisting of four chronic toxicity tests every two weeks using the species that exhibited toxicity. Guidance regarding accelerated monitoring and TRE initiation is provided in the *Technical Support Document for Water Quality-based Toxics Control, EPA/505/2-90-001, March 1991* (TSD). The TSD at page 118 states, "EPA recommends if toxicity is repeatedly or periodically present at levels above effluent limits more than 20 percent of the time, a TRE should be required." Therefore, four accelerated monitoring tests are required in this provision. If no toxicity is demonstrated in the four accelerated tests, then it demonstrates that toxicity is not present at levels above the monitoring trigger more than 20 percent of the time (only 1 of 5 tests are toxic, including the initial test). However, notwithstanding the accelerated monitoring results, if there is adequate evidence of a pattern of effluent toxicity (i.e. toxicity present exceeding the monitoring trigger more than 20 percent of the time), the Executive Officer may require that the Discharger initiate a TRE.

See the WET Accelerated Monitoring Flow Chart (Figure F-3), below, for further clarification of the accelerated monitoring requirements and for the decision points for determining the need for TRE initiation.

TRE Guidance. The Discharger is required to prepare a TRE Work Plan in accordance with USEPA guidance. Numerous guidance documents are available, as identified below:

- *Toxicity Reduction Evaluation Guidance for Municipal Wastewater Treatment Plants,* (EPA/833B-99/002), August 1999.
- Generalized Methodology for Conducting Industrial TREs*, (EPA/600/2-88/070), April 1989.*
- *Methods for Aquatic Toxicity Identification Evaluations: Phase I Toxicity Characterization Procedures,* Second Edition, EPA 600/6-91/005F, February 1991.
- *Toxicity Identification Evaluation: Characterization of Chronically Toxic Effluents, Phase I*, EPA 600/6-91/005F, May 1992.
- *Methods for Aquatic Toxicity Identification Evaluations: Phase II Toxicity Identification Procedures for Samples Exhibiting acute and Chronic Toxicity,* Second Edition, EPA 600/R-92/080, September 1993.
- *Methods for Aquatic Toxicity Identification Evaluations: Phase III Toxicity Confirmation Procedures for Samples Exhibiting Acute and Chronic Toxicity*, Second Edition, EPA 600/R-92/081, September 1993.

- *Methods for Measuring the Acute Toxicity of Effluents and Receiving Waters to Freshwater and Marine Organisms*, Fifth Edition, EPA-821-R-02-012, October 2002.

- *Short-term Methods for Estimating the Chronic Toxicity of Effluents and Receiving Waters to Freshwater Organisms*, Fourth Edition, EPA-821-R-02-013, October 2002.

- *Technical Support Document for Water Quality-based Toxics Control, EPA/505/2-90-001, March 1991.*

Figure F-3
WET Accelerated Monitoring Flow Chart

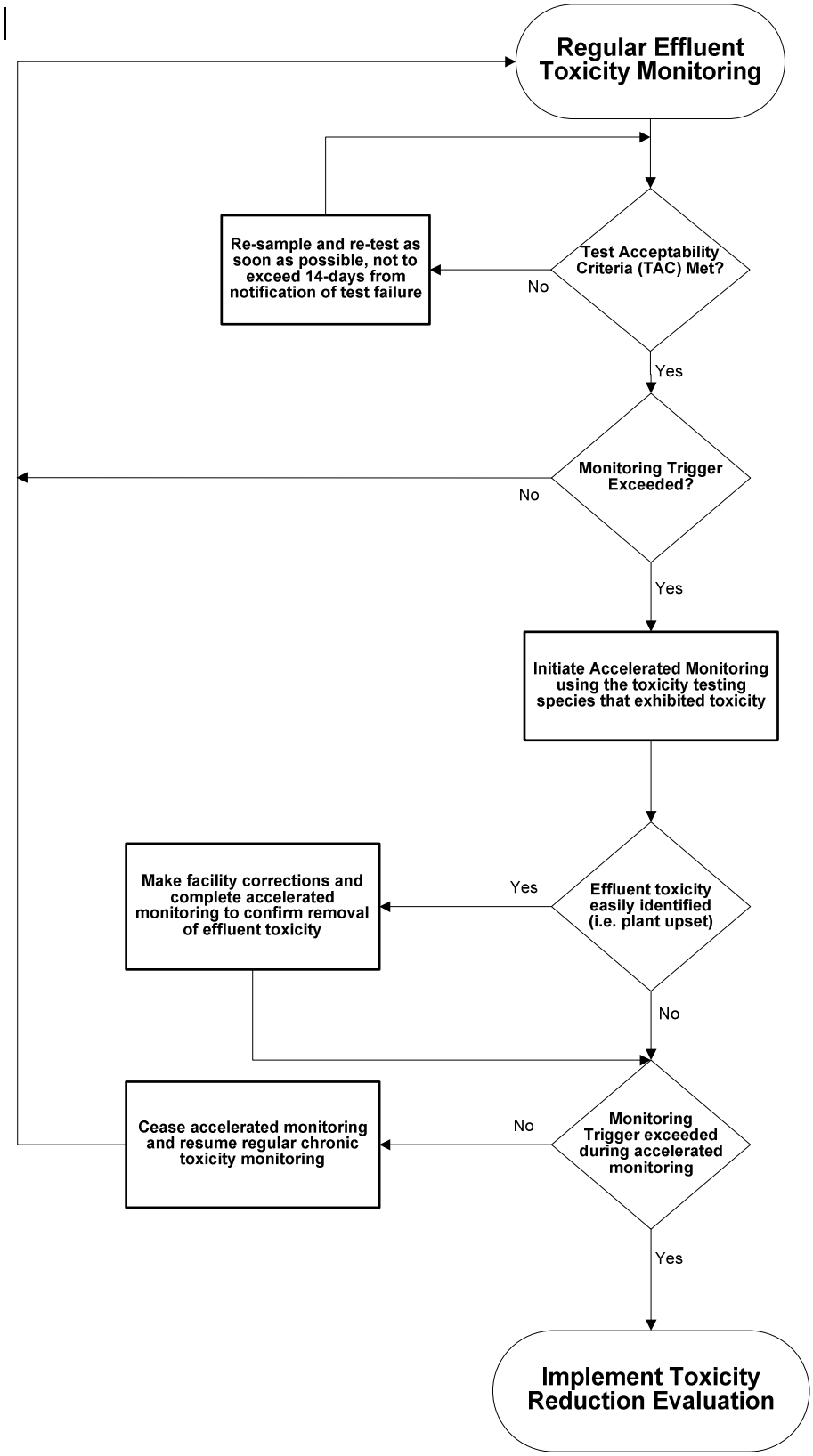

b. **Mixing Zone Study**. As discussed in Section IV.C.2.c of the Fact Sheet, the Discharger conducted a mixing zone study that demonstrated the discharge was completely-mixed. However, since the outfall diffuser was not constructed at the time, a full scale prototype was used to conduct the study. Therefore, it is necessary for the Discharger to conduct a mixing zone study following construction and operation of the outfall diffuser to confirm that adequate mixing is occurring in the receiving water. This provision requires the Discharger to submit a work plan and schedule for conducting the study within 120 days after Regional Water Board approval to initiate a surface water discharge. The mixing zone study shall be completed and submitted to the Regional Water Board within one year of approval of the work plan and schedule.

3. Best Management Practices and Pollution Prevention

a. **Salinity Evaluation and Minimization Plan.** The Discharger shall prepare a salinity evaluation and minimization plan to address sources of salinity from the domestic wastewater treatment system. The plan shall be completed and submitted to the Regional Water Board within 9 months of the effective date of this Order for approval by the Executive Officer. A work plan and time schedule for preparation of the salinity evaluation and minimization plan shall be completed and submitted **within 6 months of the effective date of this Order** for approval by the Executive Officer. The salinity evaluation and minimization plan shall be completed and submitted to the Regional Water Board **within two (2) years following work plan approval by the Executive Officer**, and progress reports shall be submitted in accordance with the Monitoring and Reporting Program (Attachment E, Section X.D.1.).

4. Construction, Operation, and Maintenance Specifications

a. **Treatment Plant Operating Requirements.** In order to protect public health and receiving waters from overflow of treated or partially treated wastewater, this Provision requires precluding public contact with wastewater, in and around the outfall, by construction of fences, signs, and other acceptable alternatives.

b. **Initiation of Surface Water Discharge.** The Report of Waste Discharge submitted by the Discharger specifies that an ultra violet disinfection system and an outfall with a diffuser to provide for adequate mixing will be constructed prior to initiation of discharge to Angels Creek and hence, the requirements for compliance is included in this Order.

5. Special Provisions for Municipal Facilities (POTWs Only)

a. **Collection System**: The Discharger's collection system is part of the treatment system that is subject to the Order 2006-0003, adopted by the State Water Board on May 2006. This Order is a Statewide General WDR for Sanitary Sewer Systems. Therefore, the Discharger shall be subject to the requirements of Order 2006-0003 and any future revisions thereto. Pursuant to federal regulations, the Discharger must properly operate and maintain its collection system [40 CFR section 122.41(e)], report any non-compliance [40 CFR section 122.41(l)(6) and (7)], and mitigate any discharge from the collection system in violation of this Order [40 CFR. section 122.41(d)].

b. **Electronic Notification**: Since the Monitoring and Reporting Program is a part of this permit and the facility is not staffed on a full time basis, certain parameters which are necessary to be monitored on a continuous basis requires an electronic system to be established for operator notification and for continuous recording device alarms. .

6. Other Special Provisions

a. **Tertiary Treatment**: To protect the beneficial uses of the receiving water and in accordance with the Discharger's February 2003 mitigated negative declaration, the discharge to Angels Creek is required to be oxidized, coagulated, filtered, and adequately disinfected pursuant to the DHS reclamation criteria, California Code of Regulations, Title 22, Division 4, Chapter 3, (Title 22), or equivalent.

b. **Ownership Change**: To maintain the accountability of the operation of the facility, the Discharger is required to notify the succeeding owner or operator of the existence of this Order by letter if, and when, there is any change in control or ownership of land or waste discharge facilities presently owned or controlled by the Discharger.

7. Compliance Schedules

Not Applicable

VIII. PUBLIC PARTICIPATION

The California Regional Water Quality Control Board, Central Valley Region (Regional Water Board) is considering the issuance of waste discharge requirements (WDRs) that will serve as a National Pollutant Discharge Elimination System (NPDES) permit for the City of Angels Wastewater Treatment Plant. As a step in the WDR adoption process, the Regional Water Board staff has developed tentative WDRs. The Regional Water Board encourages public participation in the WDR adoption process.

A. Notification of Interested Parties

The Regional Water Board has notified the Discharger and interested agencies and persons of its intent to prescribe waste discharge requirements for the discharge and has provided them with an opportunity to submit their written comments and recommendations. Notification was provided through direct mailing to agencies and known interested parties, posting of the NOPH at the Discharger's offices and the local post office and publication in the local newspaper

B. Written Comments

The staff determinations are tentative. Interested persons are invited to submit written comments concerning these tentative WDRs. Comments must be submitted either in person or by mail to the Executive Office at the Regional Water Board at the address above on the cover page of this Order.

To be fully responded to by staff and considered by the Regional Water Board, written comments should be received at the Regional Water Board offices by 5:00 p.m. on the date indicated in the transmittal letter for the proposed Orders (s)

C. Public Hearing

The Regional Water Board will hold a public hearing on the tentative WDRs during its regular Board meeting on the following date and time and at the following location:

Date: 3 May 2007
Time: 8:30 am
Location: Regional Water Quality Control Board, Central Valley Region
11020 Sun Center Dr., Suite #200
Rancho Cordova, CA 95670

Interested persons are invited to attend. At the public hearing, the Regional Water Board will hear testimony, if any, pertinent to the discharge, WDRs, and permit. Oral testimony will be heard; however, for accuracy of the record, important testimony should be in writing.

Please be aware that dates and venues may change. Our Web address is http://www.waterboards.ca.gov/rwqcb5/ where you can access the current agenda for changes in dates and locations.

D. Waste Discharge Requirements Petitions

Any aggrieved person may petition the State Water Resources Control Board to review the decision of the Regional Water Board regarding the final WDRs. The petition must be submitted within 30 days of the Regional Water Board's action to the following address:

State Water Resources Control Board
Office of Chief Counsel
P.O. Box 100, 1001 I Street

Sacramento, CA 95812-0100

E. Information and Copying

The Report of Waste Discharge (RWD), related documents, tentative effluent limitations and special provisions, comments received, and other information are on file and may be inspected at the address above at any time between 8:30 a.m. and 4:45 p.m., Monday through Friday. Copying of documents may be arranged through the Regional Water Board by calling 916-464-4645

F. Register of Interested Persons

Any person interested in being placed on the mailing list for information regarding the WDRs and NPDES permit should contact the Regional Water Board, reference this facility, and provide a name, address, and phone number.

G. Additional Information

Requests for additional information or questions regarding this order should be directed to Anand Mamidi at 916-464-4853.