CALIFORNIA REGIONAL WATER QUALITY CONTROL BOARD
CENTRAL VALLEY REGION

11020 Sun Center Drive, #200 Rancho Cordova, California 95670-6114
Phone (916) 464-3291 • Fax (916) 464-4645
http://www.waterboards.ca.gov/centralvalley

ORDER R5-2014-XXXX
NPDES NO. CA0077950

WASTE DISCHARGE REQUIREMENTS FOR THE CITY OF WOODLAND WATER POLLUTION CONTROL FACILITY YOLO COUNTY

The following Discharger is subject to waste discharge requirements (WDR's) set forth in this Order:

Table 1. Discharger Information

Discharger	City of Woodland
Name of Facility	City of Woodland Water Pollution Control Facility
Facility Address	42929 County Road 24
	Woodland, CA 95776
	Yolo County

Table 2. Discharge Location

Discharge Point	Effluent Description	Discharge Point Latitude (North)	Discharge Point Longitude (West)	Receiving Water
001	Treated Municipal Wastewater	38º 40' 51" N	121º 38' 38" W	Tule Canal

Table 3. Administrative Information

This Order was adopted on:	**9/10 October 2014**
This Order shall become effective on:	**1 December 2014**
This Order shall expire on:	**30 November 2019**
The Discharger shall file a Report of Waste Discharge as an application for reissuance of WDR's in accordance with title 23, California Code of Regulations, and an application for reissuance of a National Pollutant Discharge Elimination System (NPDES) permit no later than:	**3 June 2019**
The U.S. Environmental Protection Agency (U.S. EPA) and the California Regional Water Quality Control Board, Central Valley Region have classified this discharge as follows:	**Major**

I, Pamela Creedon, Executive Officer, do hereby certify that this Order with all attachments is a full, true, and correct copy of the Order adopted by the California Regional Water Quality Control Board, Central Valley Region, on **[DATE]**.

PAMELA C. CREEDON, Executive Officer

CONTENTS

I. Facility Information 3
II. Findings 3
III. Discharge Prohibitions 4
IV. Effluent Limitations and Discharge Specifications 4
A. Effluent Limitations – Discharge Point 001 4
1. Final Effluent Limitations – Discharge Point 001 4
2. Interim Effluent Limitations 6
B. Land Discharge Specifications – Not Applicable 6
C. Recycling Specifications – Not Applicable 6
V. Receiving Water Limitations 6
A. Surface Water Limitations 6
B. Groundwater Limitations 8
VI. Provisions 8
A. Standard Provisions 8
B. Monitoring and Reporting Program (MRP) Requirements 12
C. Special Provisions 12
1. Reopener Provisions 12
2. Special Studies, Technical Reports and Additional Monitoring Requirements 13
3. Best Management Practices and Pollution Prevention 16
4. Construction, Operation and Maintenance Specifications 16
5. Special Provisions for Municipal Facilities (POTWs Only) 18
6. Other Special Provisions 20
7. Compliance Schedules 20
VII. Compliance Determination 21

TABLES

Table 1. Discharger Information 1
Table 2. Discharge Location 1
Table 3. Administrative Information 1
Table 4. Effluent Limitations 4

ATTACHMENTS

Attachment A – Definitions A-1
Attachment B – Map B-1
Attachment C – Flow Schematic C-1
Attachment D – Standard Provisions D-1
Attachment E – Monitoring and Reporting Program E-1
Attachment F – Fact Sheet F-1
Attachment G – Summary Of Reasonable Potential Analysis G-1
Attachment H – Calculation of WQBELS H-1

I. FACILITY INFORMATION

Information describing the City of Woodland, Water Pollution Control Facility (Facility) is summarized in Table 1 and in sections I and II of the Fact Sheet (Attachment F). Section I of the Fact Sheet also includes information regarding the Facility's permit application.

II. FINDINGS

The California Regional Water Quality Control Board, Central Valley Region (hereinafter Central Valley Water Board), finds:

A. Legal Authorities. This Order serves as WDR's pursuant to article 4, chapter 4, division 7 of the California Water Code (commencing with section 13260). This Order is also issued pursuant to section 402 of the federal Clean Water Act (CWA) and implementing regulations adopted by the U.S. EPA and chapter 5.5, division 7 of the Water Code (commencing with section 13370). It shall serve as an NPDES permit for point source discharges from this facility to surface waters.

B. Background and Rationale for Requirements. The Central Valley Water Board developed the requirements in this Order based on information submitted as part of the application, through monitoring and reporting programs, and other available information. The Fact Sheet (Attachment F), which contains background information and rationale for the requirements in this Order, is hereby incorporated into and constitutes Findings for this Order. Attachments A through E and G through H are also incorporated into this Order.

C. Provisions and Requirements Implementing State Law. The provisions/requirements in subsection V.B are included to implement state law only. These provisions/requirements are not required or authorized under the federal CWA; consequently, violations of these provisions/requirements are not subject to the enforcement remedies that are available for NPDES violations.

D. Monitoring and Reporting. 40 CFR 122.48 requires that all NPDES permits specify requirements for recording and reporting monitoring results. Water Code sections 13267 and 13383 authorize the Central Valley Water Board to require technical and monitoring reports. The Monitoring and Reporting Program establishes monitoring and reporting requirements to implement federal and State requirements. The Monitoring and Reporting Program is provided in Attachment E.

The technical and monitoring reports in this Order are required in accordance with Water Code section 13267, which states the following in subsection (b)(1), *"In conducting an investigation specified in subdivision (a), the regional board may require that any person who has discharged, discharges, or is suspected of having discharged, or discharging, or who proposes to discharge waste within its region, or any citizen or domiciliary, or political agency or entity of this state who has discharged, discharges, or is suspected of having discharged or discharging, or who proposes to discharge, waste outside of its region could affect the quality of waters within its region shall furnish, under penalty of perjury, technical or monitoring program reports which the regional board requires. The burden, including costs, of these reports shall bear a reasonable relationship to the need for the report and the benefits to be obtained from the reports. In requiring those reports, the regional board shall provide the person with a written explanation with regard to the need for the reports, and shall identify the evidence that supports requiring that person to provide the reports."*

The Discharger owns and operates the Facility subject to this Order. The monitoring reports required by this Order are necessary to determine compliance with this Order. The need for the monitoring reports is discussed in the Fact Sheet.

E. Notification of Interested Parties. The Central Valley Water Board has notified the Discharger and interested agencies and persons of its intent to prescribe WDR's for the discharge and has provided them with an opportunity to submit their written comments and recommendations. Details of the notification are provided in the Fact Sheet.

F. Consideration of Public Comment. The Central Valley Water Board, in a public meeting, heard and considered all comments pertaining to the discharge. Details of the Public Hearing are provided in the Fact Sheet.

THEREFORE, IT IS HEREBY ORDERED that Order R5-2009-0010 is rescinded upon the effective date of this Order except for enforcement purposes, and, in order to meet the provisions contained in division 7 of the Water Code (commencing with section 13000) and regulations adopted thereunder, and the provisions of the CWA and regulations and guidelines adopted thereunder, the Discharger shall comply with the requirements in this Order. This action in no way prevents the Central Valley Water Board from taking enforcement action for past violations of the previous Order.

III. DISCHARGE PROHIBITIONS

A. Discharge of wastewater from the Facility, as the Facility is specifically described in the Fact Sheet in section II.B, or in a manner different from that described in this Order is prohibited.

B. The by-pass or overflow of wastes to surface waters is prohibited, except as allowed by Federal Standard Provisions I.G. and I.H. (Attachment D).

C. Neither the discharge nor its treatment shall create a nuisance as defined in section 13050 of the Water Code.

D. The Discharger shall not allow pollutant-free wastewater to be discharged into the treatment or disposal system in amounts that significantly diminish the system's capability to comply with this Order. Pollutant-free wastewater means rainfall, groundwater, cooling waters, and condensates that are essentially free of pollutants.

IV. EFFLUENT LIMITATIONS AND DISCHARGE SPECIFICATIONS

A. Effluent Limitations – Discharge Point 001

1. Final Effluent Limitations – Discharge Point 001

The Discharger shall maintain compliance with the following effluent limitations at Discharge Point 001, with compliance measured at Monitoring Location EFF-001 (except for total coliform organisms, which shall be measured at Monitoring Location UVS-002) as described in the Monitoring and Reporting Program, Attachment E:

a. The Discharger shall maintain compliance with the effluent limitations specified in Table 4:

Table 4. Effluent Limitations

Parameter	Units	Effluent Limitations				
		Average Monthly	Average Weekly	Maximum Daily	Instantaneous Minimum	Instantaneous Maximum
Conventional Pollutants						
Biochemical Oxygen Demand (5-day @ 20°C)	mg/L	10	15	20	--	--
	lbs/day[1]	867	1,301	1,735	--	--
pH	standard units	--	--	--	6.5	8.5
Total Suspended Solids	mg/L	10	15	20	--	--
	lbs/day[1]	867	1,301	1,735	--	--

Parameter	Units	Effluent Limitations				
		Average Monthly	Average Weekly	Maximum Daily	Instantaneous Minimum	Instantaneous Maximum
Priority Pollutants						
Selenium, Total Recoverable	µg/L	4.4	--	7.3	--	--
	lbs/day[1]	0.39	--	0.64	--	--
Non-Conventional Pollutants						
Ammonia Nitrogen, Total (as N)	µg/L	1.1	--	2.1	--	--
	lbs/day[1]	95	--	180	--	--

[1] Based on an average dry weather flow of 10.4 million gallons per day (MGD).

b. **Percent Removal.** The average monthly percent removal of 5-day biochemical oxygen demand (BOD_5) and total suspended solids (TSS) shall not be less than 85 percent.

c. **Acute Whole Effluent Toxicity.** Survival of aquatic organisms in 96-hour bioassays of undiluted waste shall be no less than:

   i. 70%, minimum for any one bioassay; and
   ii. 90%, median for any three consecutive bioassays.

d. **Chronic Whole Effluent Toxicity.** There shall be no chronic toxicity in the effluent discharge.

e. **Total Coliform Organisms.** Effluent total coliform organisms shall not exceed:

   i. 2.2 most probable number (MPN) per 100 mL, as a 7-day median;
   ii. 23 MPN/100 mL, more than once in any 30-day period; and
   iii. 240 MPN/100 mL, at any time.

f. **Average Dry Weather Flow.** The average dry weather discharge flow shall not exceed 10.4 MGD.

g. **Methylmercury.** Effective 31 December 2030, the effluent calendar year annual methylmercury load shall not exceed 0.43 grams, in accordance with the Delta Mercury Control Program.

h. **Boron.** The effluent calendar year annual average boron concentration shall not exceed 1.5 mg/L.

i. **Electrical Conductivity.** The effluent calendar year annual average electrical conductivity concentration shall not exceed 1,400 µmhos/cm.

j. **Diazinon and Chlorpyrifos.** During periods when the Yolo Bypass is flooded, effluent diazinon and chlorpyrifos concentrations shall not exceed the sum of one (1.0) as identified below:

i. **Average Monthly Effluent Limitation**

$$S_{AMEL} = \frac{C_{D\ AVG}}{0.079} + \frac{C_{C\ AVG}}{0.012} \leq 1.0$$

$C_{D\text{-}avg}$ = average monthly diazinon effluent concentration in µg/L.
$C_{C\text{-}avg}$ = average monthly chlorpyrifos effluent concentration in µg/L.

ii. **Maximum Daily Effluent Limitation**

$$S_{MDEL} = \frac{C_{D\ MAX}}{0.16} + \frac{C_{C\ MAX}}{0.025} \leq 1.0$$

$C_{D\text{-}max}$ = maximum daily diazinon effluent concentration in µg/L.
$C_{C\text{-}max}$ = maximum daily chlorpyrifos effluent concentration in µg/L.

2. Interim Effluent Limitations

The Discharger shall maintain compliance with the following limitations at Discharge Point 001 with compliance measured at Monitoring Location EFF-001 as described in the Monitoring and Reporting Program, Attachment E:

a. **Mercury, total. Effective immediately and until 30 December 2030,** the effluent calendar year annual total mercury load shall not exceed 481 grams/year. This interim effluent limitation shall apply in lieu of the final effluent limitation for methylmercury (Section IV.A.1.g).

b. **Boron, total. Effective immediately and until 1 January 2021,** the effluent calendar year annual average boron concentration shall not exceed 3.1 mg/L. This interim effluent limitation shall apply in lieu of the corresponding final boron effluent limitation specified in Section IV.A.1.h.

c. **Electrical Conductivity. Effective immediately and until 1 January 2021,** the effluent calendar year annual average electrical conductivity shall not exceed 1,835 µmhos/cm. This interim effluent limitation shall apply in lieu of the corresponding final electrical conductivity effluent limitation specified in Section IV.A.1.i.

B. Land Discharge Specifications – Not Applicable

C. Recycling Specifications – Not Applicable

V. RECEIVING WATER LIMITATIONS

A. Surface Water Limitations

The discharge shall not cause the following in Tule Canal.

1. **Bacteria.** The fecal coliform concentration, based on a minimum of not less than five samples for any 30-day period, to exceed a geometric mean of 200 MPN/100 mL, nor more than 10 percent of the total number of fecal coliform samples taken during any 30-day period to exceed 400 MPN/100 mL.

2. **Biostimulatory Substances.** Water to contain biostimulatory substances which promote aquatic growths in concentrations that cause nuisance or adversely affect beneficial uses.

3. **Chemical Constituents.** Chemical constituents to be present in concentrations that adversely affect beneficial uses.

4. **Color.** Discoloration that causes nuisance or adversely affects beneficial uses.
5. **Dissolved Oxygen:**
   a. The monthly median of the mean daily dissolved oxygen concentration to fall below 85 percent of saturation in the main water mass;
   b. The 95 percentile dissolved oxygen concentration to fall below 75 percent of saturation; nor
   c. The dissolved oxygen concentration to be reduced below 7.0 mg/L at any time.
6. **Floating Material.** Floating material to be present in amounts that cause nuisance or adversely affect beneficial uses.
7. **Oil and Grease.** Oils, greases, waxes, or other materials to be present in concentrations that cause nuisance, result in a visible film or coating on the surface of the water or on objects in the water, or otherwise adversely affect beneficial uses.
8. **pH.** The pH to be depressed below 6.5 nor raised above 8.5.
9. **Pesticides**
   a. Pesticides to be present, individually or in combination, in concentrations that adversely affect beneficial uses;
   b. Pesticides to be present in bottom sediments or aquatic life in concentrations that adversely affect beneficial uses;
   c. Total identifiable persistent chlorinated hydrocarbon pesticides to be present in the water column at concentrations detectable within the accuracy of analytical methods approved by U.S. EPA or the Executive Officer;
   d. Pesticide concentrations to exceed those allowable by applicable antidegradation policies (see State Water Board Resolution No. 68-16 and 40 CFR 131.12.); nor
   e. Pesticide concentrations to exceed the lowest levels technically and economically achievable.
10. **Radioactivity.** Radionuclides to be present in concentrations that are harmful to human, plant, animal, or aquatic life nor that result in the accumulation of radionuclides in the food web to an extent that presents a hazard to human, plant, animal, or aquatic life.
11. **Suspended Sediments.** The suspended sediment load and suspended sediment discharge rate of surface waters to be altered in such a manner as to cause nuisance or adversely affect beneficial uses.
12. **Settleable Substances.** Substances to be present in concentrations that result in the deposition of material that causes nuisance or adversely affects beneficial uses.
13. **Suspended Material.** Suspended material to be present in concentrations that cause nuisance or adversely affect beneficial uses.
14. **Taste and Odors.** Taste- or odor-producing substances to be present in concentrations that impart undesirable tastes or odors to fish flesh or other edible products of aquatic origin, or that cause nuisance, or otherwise adversely affect beneficial uses.
15. **Temperature.** The natural temperature to be increased by more than 5°F. Compliance to be determined based on the difference in temperature at Monitoring Locations RSW-001 and RSW-002.

16. **Toxicity.** Toxic substances to be present, individually or in combination, in concentrations that produce detrimental physiological responses in human, plant, animal, or aquatic life.

17. **Turbidity**

    a. Shall not exceed 2 Nephelometric Turbidity Units (NTU) where natural turbidity is less than 1 NTU;

    b. Shall not increase more than 1 NTU where natural turbidity is between 1 and 5 NTUs;

    c. Shall not increase more than 20 percent where natural turbidity is between 5 and 50 NTUs;

    d. Shall not increase more than 10 NTU where natural turbidity is between 50 and 100 NTUs; nor

    e. Shall not increase more than 10 percent where natural turbidity is greater than 100 NTUs.

B. Groundwater Limitations

Release of waste constituents from any storage, treatment, or disposal component associated with the WWTP, shall not cause the underlying groundwater to contain waste constituents in concentrations greater than background water quality or water quality objectives, whichever is greater.

VI. PROVISIONS

A. Standard Provisions

1. The Discharger shall comply with all Standard Provisions included in Attachment D.

2. The Discharger shall comply with the following provisions. In the event that there is any conflict, duplication, or overlap between provisions specified by this Order, the more stringent provision shall apply:

    a. If the Discharger's wastewater treatment plant is publicly owned or subject to regulation by California Public Utilities Commission, it shall be supervised and operated by persons possessing certificates of appropriate grade according to Title 23, CCR, division 3, chapter 26.

    b. After notice and opportunity for a hearing, this Order may be terminated or modified for cause, including, but not limited to:

        i. violation of any term or condition contained in this Order;

        ii. obtaining this Order by misrepresentation or by failing to disclose fully all relevant facts;

        iii. a change in any condition that requires either a temporary or permanent reduction or elimination of the authorized discharge; and

        iv. a material change in the character, location, or volume of discharge.

        The causes for modification include:

        i. *New regulations.* New regulations have been promulgated under section 405(d) of the CWA, or the standards or regulations on which the permit was based have been changed by promulgation of amended standards or regulations or by judicial decision after the permit was issued.

ii. *Land application plans.* When required by a permit condition to incorporate a land application plan for beneficial reuse of sewage sludge, to revise an existing land application plan, or to add a land application plan.

iii. *Change in sludge use or disposal practice.* Under 40 CFR 122.62(a)(1), a change in the Discharger's sludge use or disposal practice is a cause for modification of the permit. It is cause for revocation and reissuance if the Discharger requests or agrees.

The Central Valley Water Board may review and revise this Order at any time upon application of any affected person or the Central Valley Water Board's own motion.

c. If a toxic effluent standard or prohibition (including any scheduled compliance specified in such effluent standard or prohibition) is established under section 307(a) of the CWA, or amendments thereto, for a toxic pollutant that is present in the discharge authorized herein, and such standard or prohibition is more stringent than any limitation upon such pollutant in this Order, the Central Valley Water Board will revise or modify this Order in accordance with such toxic effluent standard or prohibition.

The Discharger shall comply with effluent standards and prohibitions within the time provided in the regulations that establish those standards or prohibitions, even if this Order has not yet been modified.

d. This Order shall be modified, or alternately revoked and reissued, to comply with any applicable effluent standard or limitation issued or approved under sections 301(b)(2)(C) and (D), 304(b)(2), and 307(a)(2) of the CWA, if the effluent standard or limitation so issued or approved:

i. Contains different conditions or is otherwise more stringent than any effluent limitation in the Order; or

ii. Controls any pollutant limited in the Order.

The Order, as modified or reissued under this paragraph, shall also contain any other requirements of the CWA then applicable.

e. The provisions of this Order are severable. If any provision of this Order is found invalid, the remainder of this Order shall not be affected.

f. The Discharger shall take all reasonable steps to minimize any adverse effects to waters of the State or users of those waters resulting from any discharge or sludge use or disposal in violation of this Order. Reasonable steps shall include such accelerated or additional monitoring as necessary to determine the nature and impact of the non-complying discharge or sludge use or disposal.

g. The Discharger shall ensure compliance with any existing or future pretreatment standard promulgated by U.S. EPA under section 307 of the CWA, or amendment thereto, for any discharge to the municipal system.

h. A copy of this Order shall be maintained at the discharge facility and be available at all times to operating personnel. Key operating personnel shall be familiar with its content.

i. Safeguard to electric power failure:

i. The Discharger shall provide safeguards to assure that, should there be reduction, loss, or failure of electric power, the discharge shall comply with the terms and conditions of this Order.

ii. Upon written request by the Central Valley Water Board, the Discharger shall submit a written description of safeguards. Such safeguards may include alternate power sources, standby generators, retention capacity, operating procedures, or other means. A description of the safeguards provided shall include an analysis of the frequency, duration, and impact of power failures experienced over the past 5 years on effluent quality and on the capability of the Discharger to comply with the terms and conditions of the Order. The adequacy of the safeguards is subject to the approval of the Central Valley Water Board.

iii. Should the treatment works not include safeguards against reduction, loss, or failure of electric power, or should the Central Valley Water Board not approve the existing safeguards, the Discharger shall, within 90 days of having been advised in writing by the Central Valley Water Board that the existing safeguards are inadequate, provide to the Central Valley Water Board and U.S. EPA a schedule of compliance for providing safeguards such that in the event of reduction, loss, or failure of electric power, the Discharger shall comply with the terms and conditions of this Order. The schedule of compliance shall, upon approval of the Central Valley Water Board, become a condition of this Order.

j. The Discharger, upon written request of the Central Valley Water Board, shall file with the Board a technical report on its preventive (failsafe) and contingency (cleanup) plans for controlling accidental discharges, and for minimizing the effect of such events. This report may be combined with that required under the Central Valley Water Board Standard Provision contained in section VI.A.2.i of this Order.

The technical report shall:

i. Identify the possible sources of spills, leaks, untreated waste by-pass, and contaminated drainage. Loading and storage areas, power outage, waste treatment unit outage, and failure of process equipment, tanks and pipes should be considered.

ii. Evaluate the effectiveness of present facilities and procedures and state when they became operational.

iii. Predict the effectiveness of the proposed facilities and procedures and provide an implementation schedule containing interim and final dates when they will be constructed, implemented, or operational.

The Central Valley Water Board, after review of the technical report, may establish conditions which it deems necessary to control accidental discharges and to minimize the effects of such events. Such conditions shall be incorporated as part of this Order, upon notice to the Discharger.

k. A publicly owned treatment works whose waste flow has been increasing, or is projected to increase, shall estimate when flows will reach hydraulic and treatment capacities of its treatment and disposal facilities. The projections shall be made in January, based on the last 3 years' average dry weather flows, peak wet weather flows and total annual flows, as appropriate. When any projection shows that

capacity of any part of the facilities may be exceeded in 4 years, the Discharger shall notify the Central Valley Water Board by 31 January. A copy of the notification shall be sent to appropriate local elected officials, local permitting agencies and the press. Within 120 days of the notification, the Discharger shall submit a technical report showing how it will prevent flow volumes from exceeding capacity or how it will increase capacity to handle the larger flows. The Central Valley Water Board may extend the time for submitting the report.

l. The Discharger shall submit technical reports as directed by the Executive Officer. All technical reports required herein that involve planning, investigation, evaluation, or design, or other work requiring interpretation and proper application of engineering or geologic sciences, shall be prepared by or under the direction of persons registered to practice in California pursuant to California Business and Professions Code, sections 6735, 7835, and 7835.1. To demonstrate compliance with Title 16, CCR, sections 415 and 3065, all technical reports must contain a statement of the qualifications of the responsible registered professional(s). As required by these laws, completed technical reports must bear the signature(s) and seal(s) of the registered professional(s) in a manner such that all work can be clearly attributed to the professional responsible for the work.

m. The Central Valley Water Board is authorized to enforce the terms of this permit under several provisions of the Water Code, including, but not limited to, sections 13385, 13386, and 13387.

n. For publicly owned treatment works, prior to making any change in the point of discharge, place of use, or purpose of use of treated wastewater that results in a permanent decrease of flow in any portion of a watercourse, the Discharger must file a petition with the State Water Board, Division of Water Rights, and receive approval for such a change. (Water Code section 1211).

o. In the event of any change in control or ownership of land or waste discharge facilities presently owned or controlled by the Discharger, the Discharger shall notify the succeeding owner or operator of the existence of this Order by letter, a copy of which shall be immediately forwarded to the Central Valley Water Board.

To assume operation under this Order, the succeeding owner or operator must apply in writing to the Executive Officer requesting transfer of the Order. The request must contain the requesting entity's full legal name, the state of incorporation if a corporation, address and telephone number of the persons responsible for contact with the Central Valley Water Board and a statement. The statement shall comply with the signatory and certification requirements in the federal Standard Provisions (Attachment D, section V.B) and state that the new owner or operator assumes full responsibility for compliance with this Order. Failure to submit the request shall be considered a discharge without requirements, a violation of the Water Code. Transfer shall be approved or disapproved in writing by the Executive Officer.

p. Failure to comply with provisions or requirements of this Order, or violation of other applicable laws or regulations governing discharges from this facility, may subject the Discharger to administrative or civil liabilities, criminal penalties, and/or other enforcement remedies to ensure compliance. Additionally, certain violations may subject the Discharger to civil or criminal enforcement from appropriate local, state, or federal law enforcement entities.

q. In the event the Discharger does not comply or will be unable to comply for any reason, with any prohibition, effluent limitation**,** or receiving water limitation of this Order, the Discharger shall notify the Central Valley Water Board by telephone (916) 464-3291 within 24 hours of having knowledge of such noncompliance, and shall confirm this notification in writing within five days, unless the Central Valley Water Board waives confirmation. The written notification shall state the nature, time, duration, and cause of noncompliance, and shall describe the measures being taken to remedy the current noncompliance and prevent recurrence including, where applicable, a schedule of implementation. Other noncompliance requires written notification as above at the time of the normal monitoring report.

B. Monitoring and Reporting Program (MRP) Requirements

The Discharger shall comply with the MRP, and future revisions thereto, in Attachment E.

C. Special Provisions

1. Reopener Provisions

a. Conditions that necessitate a major modification of a permit are described in 40 CFR 122.62, including, but not limited to:

i. If new or amended applicable water quality standards are promulgated or approved pursuant to section 303 of the CWA, or amendments thereto, this permit may be reopened and modified in accordance with the new or amended standards.

ii. When new information, that was not available at the time of permit issuance, would have justified different permit conditions at the time of issuance.

b. This Order may be reopened for modification, or revocation and reissuance, as a result of the detection of a reportable priority pollutant generated by special conditions included in this Order. These special conditions may be, but are not limited to, fish tissue sampling, whole effluent toxicity, monitoring requirements on internal waste stream(s), and monitoring for surrogate parameters. Additional requirements may be included in this Order as a result of the special condition monitoring data.

c. **Mercury**. The Basin Plan's Delta Mercury Control Program was designed to proceed in two phases. After Phase 1, the Central Valley Water Board will conduct a Phase 1 Delta Mercury Control Program Review that considers modification to the Delta Mercury Control Program. This Order may be reopened to address changes to the Delta Mercury Control Program.

d. **Pollution Prevention Plan (PPP)**. This Order requires the Discharger to prepare and submit a PPP following Water Code section 13263.3(d)(3) for mercury. Based on a review of the PPP, this Order may be reopened for addition and/or modification of effluent limitations and requirements for mercury.

e. **Whole Effluent Toxicity.** As a result of a Toxicity Reduction Evaluation (TRE), this Order may be reopened to include a numeric chronic toxicity limitation, a new acute toxicity limitation, and/or a limitation for a specific toxicant identified in the TRE. Additionally, if the State Water Board revises the SIP's toxicity control provisions that would require the establishment of numeric chronic toxicity effluent limitations, this Order may be reopened to include a numeric chronic toxicity effluent limitation based on the new provisions.

f. **Water Effects Ratios (WER) and Metal Translators.** A default WER of 1.0 has been used in this Order for calculating criteria for applicable inorganic constituents. In addition, default dissolved-to-total metal translators have been used to convert water quality objectives from dissolved to total recoverable . If the Discharger performs studies to determine site-specific WERs and/or site-specific dissolved-to-total metal translators, this Order may be reopened to modify the effluent limitations for the applicable inorganic constituents.

g. **Drinking Water Policy.** On 26 July 2013 the Central Valley Water Board adopted Resolution No. R5-2013-0098 amending the Basin Plan and establishing a Drinking Water Policy. The State Water Board approved the Drinking Water Policy on 3 December 2013. This Order may be reopened to incorporate monitoring of drinking water constituents to implement the Drinking Water Policy.

h. **Diazinon and Chlorpyrifos Basin Plan Amendment.** Central Valley Water Board staff is developing a Basin Plan Amendment to provide an implementation plan for NPDES-permitted domestic wastewater dischargers. This Order may be reopened to modify diazinon and chlorpyrifos effluent limitations, as appropriate, in accordance with an amendment to the Basin Plan.

i. **Ultraviolet (UV) Disinfection Operating Specifications.** The UV operating specifications in this Order are based on the UV guidelines developed by the National Water Research Institute and American Water Works Association Research Foundation titled, “Ultraviolet Disinfection Guidelines for Drinking Water and Water Reuse” and the design specifications for the Facility. If the Discharger conducts a site-specific UV Engineering study that identifies alternative site-specific UV operating specifications that will achieve the virus inactivation equivalent to Title 22 disinfected tertiary recycled water, this Order may be reopened to modify the UV operating specifications.

j. **Effluent Limitations for BOD_5.** If the Discharger performs studies supporting the replacement of effluent limitations and monitoring for BOD_5 with total organic carbon (TOC), this Order may be reopened to discontinue the effluent limitations and monitoring requirements for BOD_5 and establish effluent limitations and monitoring requirements for TOC.

2. Special Studies, Technical Reports and Additional Monitoring Requirements

a. **Toxicity Reduction Evaluation Requirements.** For compliance with the Basin Plan’s narrative toxicity objective, this Order requires the Discharger to conduct chronic whole effluent toxicity (WET) testing, as specified in MRP section V. Furthermore, this Provision requires the Discharger to investigate the causes of, and identify corrective actions to reduce or eliminate effluent toxicity. If the discharge exceeds the numeric toxicity monitoring trigger during accelerated monitoring established in this Provision, the Discharger is required to initiate a Toxicity Reduction Evaluation (TRE) in accordance with an approved TRE Work Plan, and take actions to mitigate the impact of the discharge and prevent recurrence of toxicity. A TRE is a site-specific study conducted in a stepwise process to identify the source(s) of toxicity and the effective control measures for effluent toxicity. TREs are designed to identify the causative agents and sources of whole effluent toxicity, evaluate the effectiveness of the toxicity control options, and confirm the reduction in effluent toxicity. This Provision includes procedures for accelerated chronic toxicity monitoring and TRE initiation.

i. **Accelerated Monitoring and TRE Initiation.** When the numeric toxicity monitoring trigger is exceeded during regular chronic toxicity monitoring, and the testing meets all test acceptability criteria, the Discharger shall initiate accelerated monitoring as required in the Accelerated Monitoring Specifications. The Discharger shall initiate a TRE to address effluent toxicity if any WET testing results exceed the numeric toxicity monitoring trigger during accelerated monitoring.

ii. **Numeric Toxicity Monitoring Trigger.** The numeric toxicity monitoring trigger to initiate a TRE is >1 TUc (where TUc = 100/NOEC) for all chronic toxicity endpoints, except the *Selenastrum capricornutum* growth endpoint. For the *Selenastrum capricornutum* growth endpoint, the numeric toxicity monitoring trigger to initiate a TRE is >2 TUc. The monitoring trigger is not an effluent limitation; it is the toxicity threshold at which the Discharger is required to begin accelerated monitoring and initiate a TRE.

iii. **Accelerated Monitoring Specifications.** If the numeric toxicity monitoring trigger is exceeded during regular chronic toxicity testing, the Discharger shall initiate accelerated monitoring within 14-days of notification by the laboratory of the exceedance. Accelerated monitoring shall consist of four chronic toxicity tests conducted once every two weeks using the species that exhibited toxicity. The following protocol shall be used for accelerated monitoring and TRE initiation:

(a) If the results of four consecutive accelerated monitoring tests do not exceed the monitoring trigger, the Discharger may cease accelerated monitoring and resume regular chronic toxicity monitoring. However, notwithstanding the accelerated monitoring results, if there is adequate evidence of a pattern of effluent toxicity, the Executive Officer may require that the Discharger initiate a TRE.

(b) If the source(s) of the toxicity is easily identified (e.g., temporary plant upset), the Discharger shall make necessary corrections to the facility and shall continue accelerated monitoring until four consecutive accelerated tests do not exceed the monitoring trigger. Upon confirmation that the effluent toxicity has been removed, the Discharger may cease accelerated monitoring and resume regular chronic toxicity monitoring.

(c) If the result of any accelerated toxicity test exceeds the monitoring trigger, the Discharger shall cease accelerated monitoring and begin a TRE to investigate the cause(s) of, and identify corrective actions to reduce or eliminate effluent toxicity. Within thirty (30) days of notification by the laboratory of any test result exceeding the monitoring trigger during accelerated monitoring, the Discharger shall submit a TRE Action Plan to the Central Valley Water Board including, at minimum:

(1) Specific actions the Discharger will take to investigate and identify the cause(s) of toxicity, including a TRE WET monitoring schedule;

(2) Specific actions the Discharger will take to mitigate the impact of the discharge and prevent the recurrence of toxicity; and

(3) A schedule for these actions.

b. **Phase 1 Methylmercury Control Study**. In accordance with the Basin Plan's Delta Mercury Control Program and the compliance schedule included in this Order for

methylmercury (Section VI.C.7.a), the Discharger shall continue to participate in the Central Valley Clean Water Association (CVCWA) Coordinated Methylmercury Control Study (Study) to evaluate existing control methods and, as needed, develop additional control methods that could be implemented to achieve the methylmercury waste load allocation. A work plan was submitted by CVCWA on 20 April 2013. The study work plan will be reviewed by a Technical Advisory Committee (TAC) and approved by the Executive Officer. The work plan shall be implemented immediately after approval by the Executive Officer, and a progress report shall be submitted by **20 October 2015**.

The Study shall evaluate the feasibility of reducing sources more than the minimum amount needed to achieve the methylmercury allocation. The Study also may include an evaluation of innovative actions, watershed approaches, offsets projects, and other short and long-term actions that result in reducing inorganic (total) mercury and methylmercury to address the accumulation of methylmercury in fish tissue and to reduce methylmercury exposure. The Study may evaluate the effectiveness of using inorganic (total) mercury controls to control methylmercury discharges.

The Study shall include a description of methylmercury and/or inorganic (total) mercury management practices identified in Phase 1; an evaluation of the effectiveness, costs, potential environmental effects, and overall feasibility of the control actions. The Study shall also include proposed implementation plans and schedules to comply with methylmercury allocations as soon as possible. The Study shall be submitted to the Central Valley Water Board by **20 October 2018**.

The Executive Officer may, after public notice, extend the due date up to 2 years if the Discharger demonstrates it is making significant progress towards developing, implementing and/or completing the Study and reasonable attempts have been made to secure funding for the Study, but the Discharger has experienced severe budget shortfalls.

c. **Groundwater Monitoring and Electrical Conductivity (EC) Evaluation**. Groundwater monitoring results have shown higher concentrations of chloride, total dissolved solids, EC, boron, and sodium in the compliance wells in comparison to the upgradient wells. However, the new surface water supply is expected to reduce further impacts to groundwater. This Order requires the Discharger to continue groundwater monitoring in accordance with section VIII.B of the MRP (Attachment E) and evaluate EC concentrations in the groundwater. The Discharger shall:

i. Prepare a groundwater EC trend analysis report evaluating EC concentrations in the underlying groundwater from February 2007 to 31 December 2015. The report shall contain groundwater trend-plots and conclusions.

ii. Prepare annual updates of the groundwater EC trend analysis report. The annual updates shall evaluate all the new data with the previous data gathered during the entire analysis period.

iii. The Discharger shall submit these reports on 1 February, beginning 1 February 2016, and annually thereafter, as follows:

Task	Compliance Date
i. Submit groundwater monitoring and EC trend analysis report	**1 February 2016 and**

using data from February 2007 through 31 December 2015, and subsequent yearly data for annual updates. **annually thereafter**

d. **Sludge Pond Lining Schedule.** The Discharger uses south ponds 9, 10, and 11 for sludge stabilization. In order to provide additional protection to groundwater, the Discharger is treating the three sludge pond bottoms with a lime and cement mixture. This treatment will reduce permeability and also allow better access for sludge removal operations. The treatment of the bottom of pond 11 was completed in 2012. The Discharger will complete the treatment of the bottom of ponds 9 and 10 by 1 December 2015. The Discharger must submit certification that all three sludge pond bottoms have been treated with the lime and cement mixture by **1 January 2016**.

3. Best Management Practices and Pollution Prevention

a. **Pollution Prevention Plan (PPP) for Mercury.** The Discharger shall prepare and implement a PPP for mercury **within 9 months** of the effective date of this Order in accordance with Water Code section 13263.3(d)(3), per the compliance schedule in this Order for methylmercury (Section VI.C.7.a). The minimum requirements for the PPP are outlined in the Fact Sheet (Attachment F, section VI.B.3.a). Annual progress reports shall be submitted in accordance with the Monitoring and Reporting Program (Attachment E, section X.D.1.). The progress reports shall discuss the effectiveness of the PPP in the reduction of mercury in the discharge, include a summary of mercury and methylmercury monitoring results, and discuss updates to the PPP.

b. **Mercury Exposure Reduction Program**. The Discharger is participating in the collective Delta Mercury Exposure Reduction Program (MERP) in accordance with the Basin Plan's Delta Mercury Control Program. By letter dated 13 May 2013, the Discharger elected to provide financial support in the collective MERP with other Delta dischargers, rather than be individually responsible for any MERP activities. The objective of the MERP is to reduce mercury exposure of Delta fish consumers most likely affected by mercury. The work plan shall address the MERP objective, elements, and the Discharger's coordination with other stakeholders. The minimum requirements for the exposure reduction work plan are outlined in the Fact Sheet (Attachment F, section VI.B.3.b). The Discharger shall integrate or, at minimum, provide good-faith opportunities for integration of community-based organizations, tribes, and consumers of Delta fish into planning, decision making, and implementation of exposure reduction activities. The Discharger shall continue to participate in the group effort to implement the work plan.

c. **Salinity Evaluation and Minimization Plan.** The Discharger shall update and continue to implement a salinity evaluation and minimization plan to identify and address sources of salinity from the Facility. The updated plan shall be submitted to the Central Valley Water Board **within 9 months** of the effective date of this Order. The Discharger shall provide annual reports demonstrating reasonable progress in the reduction of salinity in its discharge to Tule Canal. The annual reports shall be submitted in accordance with the Monitoring and Reporting Program (Attachment E, section IX.D.1).

4. Construction, Operation and Maintenance Specifications

a. **Filtration System Operating Specifications.** To ensure the filtration system is operating properly to provide adequate disinfection of the wastewater, the turbidity of the filter effluent measured at Monitoring Location FIL-001 shall not exceed:

i. 2 NTU as a daily average;
ii. 5 NTU more than 5 percent of the time within a 24-hour period; and
iii. 10 NTU, at any time.

b. **Ultraviolet (UV) Disinfection System Operating Specifications.** The UV disinfection system must be operated in accordance with an operations and maintenance program that assures adequate disinfection, and shall meet the following minimum specifications to provide virus inactivation equivalent to Title 22 Disinfected Tertiary Recycled Water:

i. **UV Dose.** The minimum hourly average UV dose in the UV reactor shall be 125 millijoules per square centimeter (mJ/cm^2).

ii. **UV Transmittance**. The minimum hourly average UV transmittance (at 254 nanometers) in the wastewater measured at UVS-001 shall not fall below 55 percent.

iii. The lamp sleeves and cleaning system components must be visually inspected per the manufacturer's operations manual for physical wear (scoring, solarization, seal leaks, cleaning fluid levels, etc.) and to check the efficacy of the cleaning system.

iv. The lamp sleeves must be cleaned periodically as necessary to meet the UV dose requirements.

v. Lamps must be replaced per the manufacturer's operations manual, or sooner, if there are indications the lamps are failing to provide adequate disinfection. Lamp age and lamp replacement records must be maintained.

c. **South Ponds and Erskine Pond Operating Requirements**

i. The treatment facilities shall be designed, constructed, operated, and maintained to prevent inundation or washout due to floods with a 100-year return frequency.

ii. Public contact with wastewater shall be precluded through such means as fences, signs, and other acceptable alternatives.

iii. Ponds shall be managed to prevent breeding of mosquitoes. In particular,

(a) An erosion control program should assure that small coves and irregularities are not created around the perimeter of the water surface.

(b) Weeds shall be minimized.

(c) Dead algae, vegetation, and debris shall not accumulate on the water surface.

iv. Freeboard shall never be less than 2 feet (measured vertically to the lowest point of overflow), except if lesser freeboard does not threaten the integrity of the pond, no overflow of the pond occurs, and lesser freeboard is due to direct precipitation or storm water runoff occurring as a result of annual precipitation with greater than a 100-year recurrence interval, or a storm event with an intensity greater than a 25-year, 24-hour storm event.

v. Ponds shall have sufficient capacity to accommodate allowable wastewater flow and design seasonal precipitation and ancillary inflow and infiltration during the non-irrigation season. Design seasonal precipitation shall be based on total annual precipitation using a return period of 100 years, distributed

monthly in accordance with historical rainfall patterns. Freeboard shall never be less than 2 feet (measured vertically to the lowest point of overflow).

vi. Prior to the onset of the rainy season of each year, available pond storage capacity shall at least equal the volume necessary to comply with section VI.C.4.c.v, above.

vii. The Discharger uses south ponds 9, 10, and 11 for sludge stabilization. The remaining nine south ponds are used for odor control. The Discharger is treating the three sludge pond bottoms with a lime and cement mixture to reduce permeability and allow sludge removal operations. The lime-cement treatment of bottom of Pond 11 was completed in 2012. Treatment of the bottoms of Pond 9 and Pond 10 will be completed by 1 December 2015. If the City of Woodland's population growth warrants an additional pond (a 4th pond) be used for sludge stabilization, then the 4th pond to be used will also be treated with the lime and cement mixture.

5. Special Provisions for Municipal Facilities (POTWs Only)

a. **Pretreatment Requirements**

i. The Discharger shall be responsible and liable for the performance of all Control Authority pretreatment requirements contained in 40 CFR Part 403, including any subsequent regulatory revisions to 40 CFR Part 403. Where 40 CFR Part 403 or subsequent revision places mandatory actions upon the Discharger as Control Authority but does not specify a timetable for completion of the actions, the Discharger shall complete the required actions within 6 months from the issuance date of this permit or the effective date of the 40 CFR Part 403 revisions, whichever comes later. For violations of pretreatment requirements, the Discharger shall be subject to enforcement actions, penalties, fines, and other remedies by U.S. EPA or other appropriate parties, as provided in the CWA. U.S. EPA may initiate enforcement action against a nondomestic user for noncompliance with applicable standards and requirements as provided in the CWA.

ii. The Discharger shall enforce the requirements promulgated under sections 307(b), 307(c), 307(d), and 402(b) of the CWA with timely, appropriate and effective enforcement actions. The Discharger shall cause all nondomestic users subject to federal categorical standards to achieve compliance no later than the date specified in those requirements or, in the case of a new nondomestic user, upon commencement of the discharge.

iii. The Discharger shall perform the pretreatment functions as required in 40 CFR Part 403 including, but not limited to:

(a) Implement the necessary legal authorities as provided in 40 CFR 403.8(f)(1);

(b) Enforce the pretreatment requirements under 40 CFR 403.5 and 403.6;

(c) Implement the programmatic functions as provided in 40 CFR 403.8(f)(2); and

(d) Provide the requisite funding and personnel to implement the pretreatment program as provided in 40 CFR 403.8(f)(3).

iv. **Pretreatment Reporting Requirements.** Pretreatment reporting requirements are included in the Monitoring and Reporting Program, section X.D.5 of Attachment E.

b. **Sludge/Biosolids Treatment or Discharge Specifications.** Sludge in this document means the solid, semisolid, and liquid residues removed during primary, secondary, or advanced wastewater treatment processes. Solid waste refers to grit and screening material generated during preliminary treatment. Residual sludge means sludge that will not be subject to further treatment at the wastewater treatment plant. Biosolids refer to sludge that has been treated and tested and shown to be capable of being beneficially and legally used pursuant to federal and state regulations as a soil amendment for agricultural, silvicultural, horticultural, and land reclamation activities as specified under 40 CFR Part 503.

i. Collected screenings, residual sludge, biosolids, and other solids removed from liquid wastes shall be disposed of in a manner approved by the Executive Officer, and consistent with Consolidated Regulations for Treatment, Storage, Processing, or Disposal of Solid Waste, as set forth in Title 27, CCR, division 2, subdivision 1, section 20005, et seq. Removal for further treatment, storage, disposal, or reuse at sites (e.g., landfill, composting sites, soil amendment sites) that are operated in accordance with valid waste discharge requirements issued by a Regional Water Board will satisfy these specifications.

Sludge and solid waste shall be removed from screens, sumps, ponds, clarifiers, etc. as needed to ensure optimal plant performance.

The treatment of sludge generated at the Facility shall be confined to the Facility property and conducted in a manner that precludes infiltration of waste constituents into soils in a mass or concentration that will violate groundwater limitations in section V.B. of this Order. In addition, the storage of residual sludge, solid waste, and biosolids on Facility property shall be temporary and controlled, and contained in a manner that minimizes leachate formation and precludes infiltration of waste constituents into soils in a mass or concentration that will violate groundwater limitations included in section V.B. of this Order.

ii. The use, disposal, storage, and transportation of biosolids shall comply with existing federal and state laws and regulations, including permitting requirements and technical standards included in 40 CFR Part 503. If the State Water Board and the Central Valley Water Board are given the authority to implement regulations contained in 40 CFR Part 503, this Order may be reopened to incorporate appropriate time schedules and technical standards. The Discharger must comply with the standards and time schedules contained in 40 CFR Part 503 whether or not they have been incorporated into this Order.

iii. The Discharger shall comply with Section IX.A. Biosolids of the Monitoring and Reporting Program, Attachment E.

iv. Any proposed change in biosolids use or disposal practice from a previously approved practice shall be reported to the Executive Officer and U.S. EPA Regional Administrator at least **90 days** in advance of the change.

v. **Within 180 days of the permit effective date,** the Discharger shall submit a biosolids use or disposal plan to the Central Valley Water Board. The plan shall describe at a minimum:

(a) Sources and amounts of biosolids generated annually.

(b) Location(s) of on-site storage and description of the containment area.

(c) Plans for ultimate disposal. For landfill disposal, include the present classification of the landfill; and the name and location of the landfill.

c. **Collection System.** On 2 May 2006, the State Water Board adopted State Water Board Order No. 2006-0003-DWQ, Statewide General WDRs for Sanitary Sewer Systems. The Discharger shall be subject to the requirements of Order No. 2006-0003-DWQ and any future revisions thereto. Order No. 2006-0003-DWQ requires that all public agencies that currently own or operate sanitary sewer systems apply for coverage under the general WDRs. The Discharger has applied for and has been approved for coverage under Order 2006-0003-DWQ for operation of its wastewater collection system.

6. Other Special Provisions

a. **Title 22, or Equivalent, Disinfection Requirements.** Wastewater shall be oxidized, coagulated, filtered, and adequately disinfected pursuant to the Department of Public Health (DPH) reclamation criteria, CCR, Title 22, division 4, chapter 3, (Title 22), or equivalent.

7. Compliance Schedules

a. **Compliance Schedule for Final Effluent Limitations for Methylmercury.** This Order requires compliance with the final effluent limitations for methylmercury by **31 December 2030**. The Discharger shall comply with the following time schedule to ensure compliance with the final effluent limitations:

Task	Date Due
Phase 1	
i. Submit CVCWA Coordinated Methylmercury Control Study Work Plan	**Complete**
ii. Submit Pollution Prevention Plan (PPP)[1] for Mercury (per Section VI.C.3.a)	**Within 9 months** of the effective date of this Order
iii. Implement CVCWA Coordinated Methylmercury Control Study Work Plan	**Immediately following Executive Officer Approval**
iv. Annual Progress Reports[2]	**30 January, annually**
v. Submit CVCWA Coordinated Methylmercury Control Study Progress Report	**20 October 2015**
vi. Submit Final CVCWA Coordinated Methylmercury Control Study	**20 October 2018[3]**
Phase 2	
vii. Implement methylmercury control programs	**TBD[4]**
viii. Full Compliance	**31 December 2030[3]**

Task	Date Due
[1] The PPP for mercury shall be implemented in accordance with Section VI.C.3.a.	
[2] Beginning **30 January 2016** and annually thereafter until the Facility achieves compliance with the final effluent limitations for methylmercury, the Discharger shall submit annual progress reports on pollution minimization activities implemented and evaluation of their effectiveness, including a summary of total mercury and methylmercury monitoring results.	
[3] The Executive Officer may, after public notice, extend the due date for the Final CVCWA Coordinated Methylmercury Control Study up to 2 years if the Discharger demonstrates it is making significant progress towards developing, implementing and/or completing the Study and reasonable attempts have been made to secure funding for the Study, but the Discharger has experienced severe budget shortfalls.	
[4] To be determined. Following Phase 1 the Central Valley Water Board will conduct a Phase 1 Delta Mercury Control Program Review that considers: modification of methylmercury goals, objectives, allocations, final compliance date, etc. Consequently, the start of Phase 2 and the final compliance date is uncertain at the time this Order was adopted.	

b. Compliance Schedules for Final Effluent Limitations for Boron and Electrical Conductivity. This Order requires compliance with the final effluent limitations for boron and electrical conductivity by **1 January 2021**. The Discharger shall comply with the following time schedule to ensure compliance with the final effluent limitations:

Task	Date Due
i. Submit certification of acceptance that the new surface water supply source water is available for use.	**1 April 2017**
ii. Submit an evaluation of the effectiveness of the surface water supply source water in reducing salinity in the Facility effluent discharge.	**31 December 2018**
iii. Submit a report on the implementation of additional source control measures proposed in Salinity Minimization and Evaluation Plan.	**1 June 2019**
iv. Submit Annual Progress Reports.[1]	**30 January, annually**
v. Achieve full compliance with final boron and electrical conductivity effluent limitations.	**1 January 2021**

[1] The progress reports shall detail what steps have been implemented towards achieving compliance with waste discharge requirements, including studies, construction progress, evaluation of measures implemented, and recommendations for additional measures as necessary to achieve full compliance by the final compliance date.

VII. COMPLIANCE DETERMINATION

A. BOD_5 and TSS Effluent Limitations (Sections IV.A.1.a and IV.A.1.b). Compliance with the final effluent limitations for BOD_5 and TSS required in Limitations and Discharge Requirements section IV.A.1.a shall be ascertained by 24-hour composite samples. Compliance with effluent limitations required in Limitations and Discharge Requirements section IV.A.1.b for percent removal shall be calculated using the arithmetic mean of BOD_5 and TSS in effluent samples collected over a monthly period as a percentage of the arithmetic mean of the values for influent samples collected at approximately the same times during the same period.

B. Total Mercury Mass Loading Effluent Limitations (Section IV.A.2.a). The procedures for calculating mass loadings are as follows:

1. The total pollutant mass load for each individual calendar month shall be determined using an average of all concentration data collected that month and the corresponding total monthly flow. All effluent monitoring data collected under the monitoring and reporting program, pretreatment program, and any special studies shall be used for these calculations. The total annual mass loading shall be the sum of the individual calendar months.

2. In calculating compliance, the Discharger shall count all non-detect measures at one-half of the detection level. If compliance with the effluent limitation is not attained due to the non-detect contribution, the Discharger shall improve and implement available analytical capabilities and compliance shall be evaluated with consideration of the detection limits.

C. Average Dry Weather Flow Effluent Limitations (Section IV.A.1.f). The average dry weather discharge flow represents the daily average flow when groundwater is at or near normal and runoff is not occurring. Compliance with the average dry weather flow effluent limitations will be determined annually based on the average daily flow over three consecutive dry weather months (e.g., July, August, and September).

D. Total Coliform Organisms Effluent Limitations (Section IV.A.1.e). For each day that an effluent sample is collected and analyzed for total coliform organisms, the 7-day median shall be determined by calculating the median concentration of total coliform bacteria in the effluent utilizing the bacteriological results of the last 7 days. For example, if a sample is collected on a Wednesday, the result from that sampling event and all results from the previous 6 days (i.e., Tuesday, Monday, Sunday, Saturday, Friday, and Thursday) are used to calculate the 7-day median. If the 7-day median of total coliform organisms exceeds a most probable number (MPN) of 2.2 per 100 milliliters, the Discharger will be considered out of compliance.

E. Mass Effluent Limitations. The mass effluent limitations contained in the Final Effluent Limitations IV.A.1.a are based on the permitted average dry weather flow and calculated as follows:.

Mass (lbs/day) = Flow (MGD) x Concentration (mg/L) x 8.34 (conversion factor)

If the effluent flow exceeds the permitted average dry weather flow during wet-weather seasons, the effluent mass limitations contained in Final Effluent Limitations IV.A.1.a shall not apply. If the effluent flow is below the permitted average dry weather flow during wet-weather seasons, the effluent mass limitations do apply.

F. Priority Pollutant Effluent Limitations. Compliance with effluent limitations for priority pollutants shall be determined in accordance with Section 2.4.5 of the SIP, as follows:

1. Dischargers shall be deemed out of compliance with an effluent limitation, if the concentration of the priority pollutant in the monitoring sample is greater than the effluent limitation and greater than or equal to the reporting level (RL).

2. Dischargers shall be required to conduct a Pollutant Minimization Program (PMP) in accordance with section 2.4.5.1 of the SIP when there is evidence that the priority pollutant is present in the effluent above an effluent limitation and either:

   a. A sample result is reported as detected, but not quantified (DNQ) and the effluent limitation is less than the RL; or

   b. A sample result is reported as non-detect (ND) and the effluent limitation is less than the method detection limit (MDL).

2. When determining compliance with an average monthly effluent limitation (AMEL) and more than one sample result is available in a month, the discharger shall compute the arithmetic mean unless the data set contains one or more reported determinations of

DNQ or ND. In those cases, the discharger shall compute the median in place of the arithmetic mean in accordance with the following procedure:

a. The data set shall be ranked from low to high, reported ND determinations lowest, DNQ determinations next, followed by quantified values (if any). The order of the individual ND or DNQ determinations is unimportant.

b. The median value of the data set shall be determined. If the data set has an odd number of data points, then the median is the middle value. If the data set has an even number of data points, then the median is the average of the two values around the middle unless one or both of the points are ND or DNQ, in which case the median value shall be the lower of the two data points where DNQ is lower than a value and ND is lower than DNQ.

3. If a sample result, or the arithmetic mean or median of multiple sample results, is below the RL, and there is evidence that the priority pollutant is present in the effluent above an effluent limitation and the discharger conducts a PMP (as described in section 2.4.5.1), the discharger shall <u>not</u> be deemed out of compliance.

G. Chronic Whole Effluent Toxicity Effluent Limitation (Section IV.A.1.d). Compliance with the accelerated monitoring and TRE provisions of Provision VI.C.2.a shall constitute compliance with the effluent limitation.

H. Chlorpyrifos and Diazinon Effluent Limitations (Section IV.A.1.j). Compliance shall be determined by calculating the sum (S), as provided in this Order, with analytical results that are reported as “non-detectable” concentrations to be considered to be zero. Monitoring is required and the final effluent limitations are in effect for chlorpyrifos and diazinon only when the Yolo Bypass is flooded. The Yolo Bypass shall be considered flooded when there is measureable flow over the Fremont Weir. Whether there is measureable flow over the Fremont Weir shall be determined by the Discharger from the Department of Water Resources, California Data Exchange Center website at: http://cdec.water.ca.gov/. The Discharger shall verify whether there is flow over the Fremont Weir by checking the Sacramento River stage height as compared to the Fremont Weir crest height (33.5 feet). When the river stage height is greater than 33.5 feet, the Yolo Bypass shall be considered flooded.

I. Boron and Electrical Conductivity Calendar Year Annual Average Effluent Limitations (Sections IV.A.1.h and IV.A.1.i). Compliance shall be determined by calculating the sum of all daily discharges measured during a calendar year divided by the number of daily discharges measured during that year.

J. Use of Delta Regional Monitoring Program (RMP) and Other Receiving Water Data to Determine Compliance with Receiving Water Limitations. Delta RMP data and other receiving water monitoring data that is not specifically required to be conducted by the Discharger under this permit will not be used directly to determine that the discharge is in violation of this Permit. The Discharger may, however, conduct any site-specific receiving water monitoring deemed appropriate by the Discharger that is not conducted by the Delta RMP and submit that monitoring data. As described in Section VIII of Attachment E, such data may be used, if scientifically defensible, in conjunction with other receiving water data, effluent data, receiving water flow data, and other pertinent information to determine whether or not a discharge is in compliance with this Permit.

ATTACHMENT A – DEFINITIONS

Arithmetic Mean (μ)
Also called the average, is the sum of measured values divided by the number of samples. For ambient water concentrations, the arithmetic mean is calculated as follows:

Arithmetic mean = $\mu = \Sigma x / n$ where: Σx is the sum of the measured ambient water concentrations, and n is the number of samples.

Average Monthly Effluent Limitation (AMEL)
The highest allowable average of daily discharges over a calendar month, calculated as the sum of all daily discharges measured during a calendar month divided by the number of daily discharges measured during that month.

Average Weekly Effluent Limitation (AWEL)
The highest allowable average of daily discharges over a calendar week (Sunday through Saturday), calculated as the sum of all daily discharges measured during a calendar week divided by the number of daily discharges measured during that week.

Bioaccumulative
Those substances taken up by an organism from its surrounding medium through gill membranes, epithelial tissue, or from food and subsequently concentrated and retained in the body of the organism.

Carcinogenic
Pollutants are substances that are known to cause cancer in living organisms.

Coefficient of Variation (CV)
CV is a measure of the data variability and is calculated as the estimated standard deviation divided by the arithmetic mean of the observed values.

Daily Discharge
Daily Discharge is defined as either: (1) the total mass of the constituent discharged over the calendar day (12:00 am through 11:59 pm) or any 24-hour period that reasonably represents a calendar day for purposes of sampling (as specified in the permit), for a constituent with limitations expressed in units of mass or; (2) the unweighted arithmetic mean measurement of the constituent over the day for a constituent with limitations expressed in other units of measurement (e.g., concentration).

The daily discharge may be determined by the analytical results of a composite sample taken over the course of one day (a calendar day or other 24-hour period defined as a day) or by the arithmetic mean of analytical results from one or more grab samples taken over the course of the day.

For composite sampling, if 1 day is defined as a 24-hour period other than a calendar day, the analytical result for the 24-hour period will be considered as the result for the calendar day in which the 24-hour period ends.

Detected, but Not Quantified (DNQ)
DNQ are those sample results less than the RL, but greater than or equal to the laboratory's MDL. Sample results reported as DNQ are estimated concentrations.

Dilution Credit
Dilution Credit is the amount of dilution granted to a discharge in the calculation of a water quality-based effluent limitation, based on the allowance of a specified mixing zone. It is calculated from the dilution ratio or determined through conducting a mixing zone study or modeling of the discharge and receiving water.

Effluent Concentration Allowance (ECA)
ECA is a value derived from the water quality criterion/objective, dilution credit, and ambient background concentration that is used, in conjunction with the coefficient of variation for the effluent monitoring data, to calculate a long-term average (LTA) discharge concentration. The ECA has the same meaning as waste load allocation (WLA) as used in U.S. EPA guidance (Technical Support Document For Water Quality-based Toxics Control, March 1991, second printing, EPA/505/2-90-001).

Enclosed Bays
Enclosed Bays means indentations along the coast that enclose an area of oceanic water within distinct headlands or harbor works. Enclosed bays include all bays where the narrowest distance between the headlands or outermost harbor works is less than 75 percent of the greatest dimension of the enclosed portion of the bay. Enclosed bays include, but are not limited to, Humboldt Bay, Bodega Harbor, Tomales Bay, Drake's Estero, San Francisco Bay, Morro Bay, Los Angeles-Long Beach Harbor, Upper and Lower Newport Bay, Mission Bay, and San Diego Bay. Enclosed bays do not include inland surface waters or ocean waters.

Estimated Chemical Concentration
The estimated chemical concentration that results from the confirmed detection of the substance by the analytical method below the ML value.

Estuaries
Estuaries means waters, including coastal lagoons, located at the mouths of streams that serve as areas of mixing for fresh and ocean waters. Coastal lagoons and mouths of streams that are temporarily separated from the ocean by sandbars shall be considered estuaries. Estuarine waters shall be considered to extend from a bay or the open ocean to a point upstream where there is no significant mixing of fresh water and seawater. Estuarine waters included, but are not limited to, the Sacramento-San Joaquin Delta, as defined in Water Code section 12220, Suisun Bay, Carquinez Strait downstream to the Carquinez Bridge, and appropriate areas of the Smith, Mad, Eel, Noyo, Russian, Klamath, San Diego, and Otay rivers. Estuaries do not include inland surface waters or ocean waters.

Inland Surface Waters
All surface waters of the state that do not include the ocean, enclosed bays, or estuaries.

Instantaneous Maximum Effluent Limitation
The highest allowable value for any single grab sample or aliquot (i.e., each grab sample or aliquot is independently compared to the instantaneous maximum limitation).

Instantaneous Minimum Effluent Limitation
The lowest allowable value for any single grab sample or aliquot (i.e., each grab sample or aliquot is independently compared to the instantaneous minimum limitation).

Maximum Daily Effluent Limitation (MDEL)
The highest allowable daily discharge of a pollutant, over a calendar day (or 24-hour period). For pollutants with limitations expressed in units of mass, the daily discharge is calculated as the total mass of the pollutant discharged over the day. For pollutants with limitations expressed in other units of measurement, the daily discharge is calculated as the arithmetic mean measurement of the pollutant over the day.

Median
The middle measurement in a set of data. The median of a set of data is found by first arranging the measurements in order of magnitude (either increasing or decreasing order). If the number of

measurements (n) is odd, then the median = $X_{(n+1)/2}$. If n is even, then the median = $(X_{n/2} + X_{(n/2)+1})/2$ (i.e., the midpoint between the n/2 and n/2+1).

Method Detection Limit (MDL)
MDL is the minimum concentration of a substance that can be measured and reported with 99 percent confidence that the analyte concentration is greater than zero, as defined in in 40 C.F.R. part 136, Attachment B, revised as of July 3, 1999.

Minimum Level (ML)
ML is the concentration at which the entire analytical system must give a recognizable signal and acceptable calibration point. The ML is the concentration in a sample that is equivalent to the concentration of the lowest calibration standard analyzed by a specific analytical procedure, assuming that all the method specified sample weights, volumes, and processing steps have been followed.

Mixing Zone
Mixing Zone is a limited volume of receiving water that is allocated for mixing with a wastewater discharge where water quality criteria can be exceeded without causing adverse effects to the overall water body.

Not Detected (ND)
Sample results which are less than the laboratory's MDL.

Ocean Waters
The territorial marine waters of the State as defined by California law to the extent these waters are outside of enclosed bays, estuaries, and coastal lagoons. Discharges to ocean waters are regulated in accordance with the State Water Board's California Ocean Plan.

Persistent Pollutants
Persistent pollutants are substances for which degradation or decomposition in the environment is nonexistent or very slow.

Pollutant Minimization Program (PMP)
PMP means waste minimization and pollution prevention actions that include, but are not limited to, product substitution, waste stream recycling, alternative waste management methods, and education of the public and businesses. The goal of the PMP shall be to reduce all potential sources of a priority pollutant(s) through pollutant minimization (control) strategies, including pollution prevention measures as appropriate, to maintain the effluent concentration at or below the water quality-based effluent limitation. Pollution prevention measures may be particularly appropriate for persistent bioaccumulative priority pollutants where there is evidence that beneficial uses are being impacted. The Central Valley Water Board may consider cost effectiveness when establishing the requirements of a PMP. The completion and implementation of a Pollution Prevention Plan, if required pursuant to Water Code section 13263.3(d), shall be considered to fulfill the PMP requirements.

Pollution Prevention
Pollution Prevention means any action that causes a net reduction in the use or generation of a hazardous substance or other pollutant that is discharged into water and includes, but is not limited to, input change, operational improvement, production process change, and product reformulation (as defined in Water Code section 13263.3). Pollution prevention does not include actions that merely shift a pollutant in wastewater from one environmental medium to another environmental medium, unless clear environmental benefits of such an approach are identified to the satisfaction of the State Water Resources Control Board (State Water Board) or Central Valley Water Board.

Satellite Collection System
The portion, if any, of a sanitary sewer system owned or operated by a different public agency than the agency that owns and operates the wastewater treatment facility that a sanitary sewer system is tributary to.

Source of Drinking Water
Any water designated as municipal or domestic supply (MUN) in a Central Valley Water Board Basin Plan.

Standard Deviation (σ)
Standard Deviation is a measure of variability that is calculated as follows:

$$\sigma = (\sum[(x - \mu)^2]/(n - 1))^{0.5}$$

where:
x is the observed value;
μ is the arithmetic mean of the observed values; and
n is the number of samples.

Toxicity Reduction Evaluation (TRE)
TRE is a study conducted in a step-wise process designed to identify the causative agents of effluent or ambient toxicity, isolate the sources of toxicity, evaluate the effectiveness of toxicity control options, and then confirm the reduction in toxicity. The first steps of the TRE consist of the collection of data relevant to the toxicity, including additional toxicity testing, and an evaluation of facility operations and maintenance practices, and best management practices. A Toxicity Identification Evaluation (TIE) may be required as part of the TRE, if appropriate. (A TIE is a set of procedures to identify the specific chemical(s) responsible for toxicity. These procedures are performed in three phases (characterization, identification, and confirmation) using aquatic organism toxicity tests.)

ATTACHMENT B – MAP

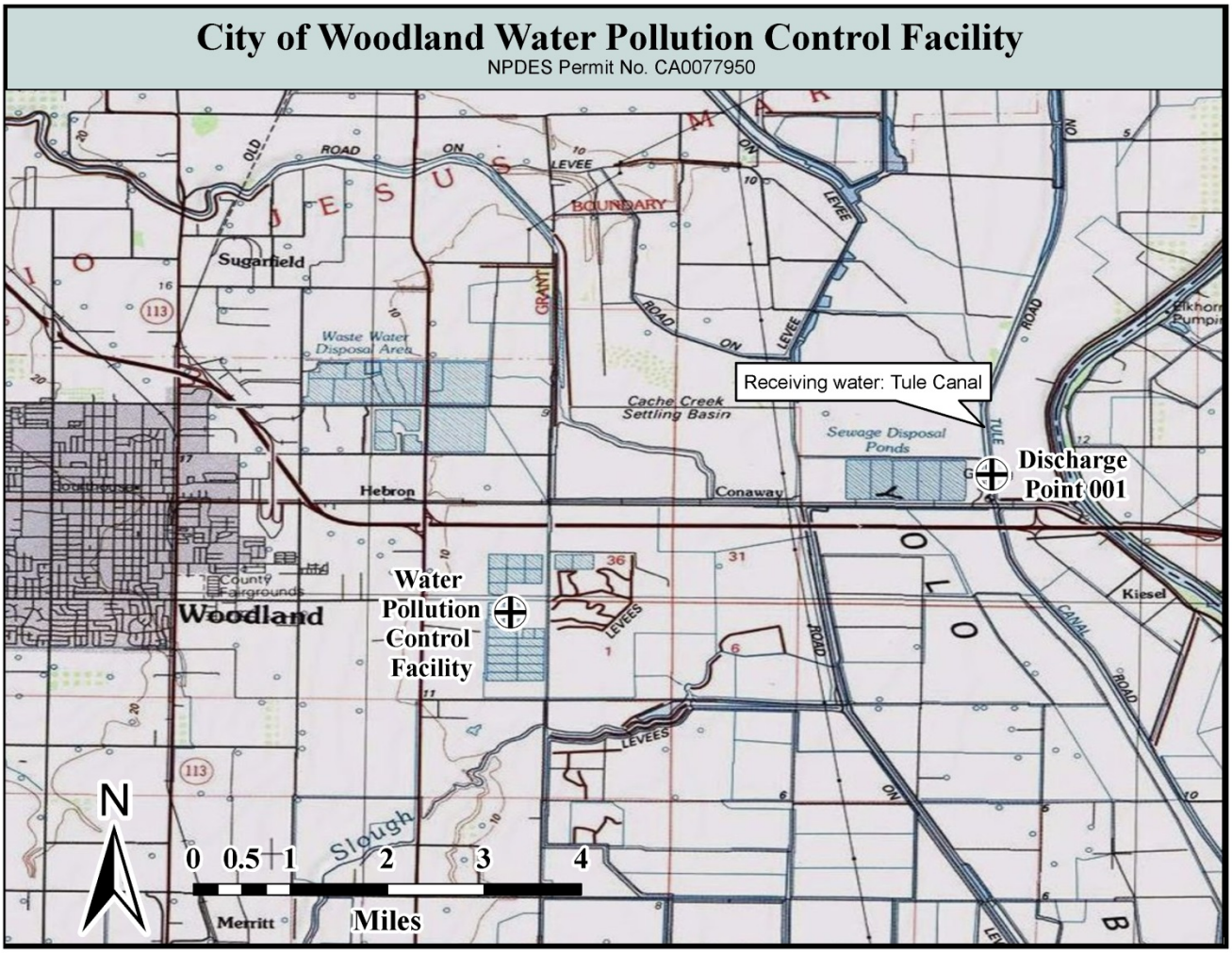

ATTACHMENT C – FLOW SCHEMATIC

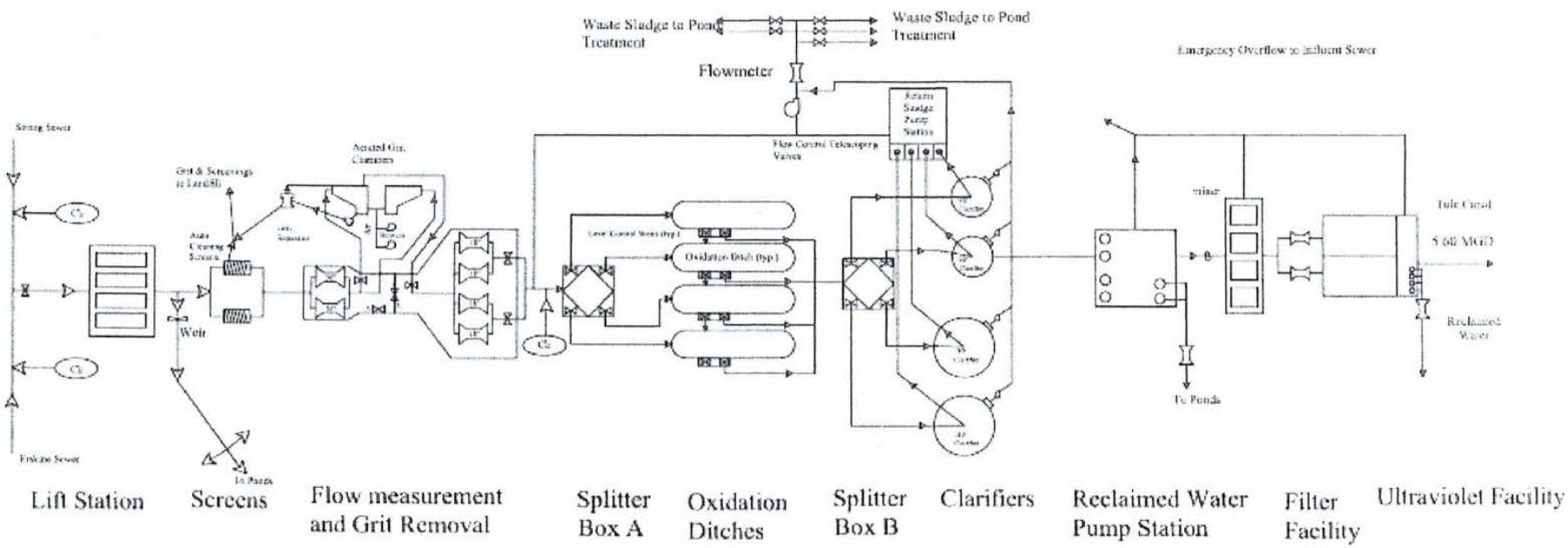

ATTACHMENT D – STANDARD PROVISIONS

I. STANDARD PROVISIONS – PERMIT COMPLIANCE

A. Duty to Comply

1. The Discharger must comply with all of the terms, requirements, and conditions of this Order. Any noncompliance constitutes a violation of the Clean Water Act (CWA) and the California Water Code and is grounds for enforcement action; permit termination, revocation and reissuance, or modification; denial of a permit renewal application; or a combination thereof. (40 C.F.R. § 122.41(a); Wat. Code, §§ 13261, 13263, 13265, 13268, 13000, 13001, 13304, 13350, 13385.)

2. The Discharger shall comply with effluent standards or prohibitions established under Section 307(a) of the CWA for toxic pollutants and with standards for sewage sludge use or disposal established under Section 405(d) of the CWA within the time provided in the regulations that establish these standards or prohibitions, even if this Order has not yet been modified to incorporate the requirement. (40 C.F.R. § 122.41(a)(1).)

B. Need to Halt or Reduce Activity Not a Defense

It shall not be a defense for a Discharger in an enforcement action that it would have been necessary to halt or reduce the permitted activity in order to maintain compliance with the conditions of this Order. (40 C.F.R. § 122.41(c).)

C. Duty to Mitigate

The Discharger shall take all reasonable steps to minimize or prevent any discharge or sludge use or disposal in violation of this Order that has a reasonable likelihood of adversely affecting human health or the environment. (40 C.F.R. § 122.41(d).)

D. Proper Operation and Maintenance

The Discharger shall at all times properly operate and maintain all facilities and systems of treatment and control (and related appurtenances) which are installed or used by the Discharger to achieve compliance with the conditions of this Order. Proper operation and maintenance also includes adequate laboratory controls and appropriate quality assurance procedures. This provision requires the operation of backup or auxiliary facilities or similar systems that are installed by a Discharger only when necessary to achieve compliance with the conditions of this Order. (40 C.F.R. § 122.41(e).)

E. Property Rights

1. This Order does not convey any property rights of any sort or any exclusive privileges. (40 C.F.R. § 122.41(g).)

2. The issuance of this Order does not authorize any injury to persons or property or invasion of other private rights, or any infringement of state or local law or regulations. (40 C.F.R. § 122.5(c).)

F. Inspection and Entry

The Discharger shall allow the Central Valley Water Board, State Water Board, U.S. EPA, and/or their authorized representatives (including an authorized contractor acting as their representative), upon the presentation of credentials and other documents, as may be required by law, to (33 U.S.C. § 1318(a)(4)(B); 40 C.F.R. § 122.41(i); Wat. Code, § 13267, 13383):

1. Enter upon the Discharger's premises where a regulated facility or activity is located or conducted, or where records are kept under the conditions of this Order (33 U.S.C § 1318(a)(4)(B)(ii); 40 C.F.R. § 122.41(i)(1); Wat. Code, §§ 13267, 13383);
2. Have access to and copy, at reasonable times, any records that must be kept under the conditions of this Order (33 U.S.C. § 1318(a)(4)(B)(ii); 40 C.F.R. § 122.41(i)(2); Wat. Code, §§ 13267, 13383);
3. Inspect and photograph, at reasonable times, any facilities, equipment (including monitoring and control equipment), practices, or operations regulated or required under this Order (33 U.S.C § 1318(a)(4)(B)(ii); 40 C.F.R. § 122.41(i)(3); Wat. Code, § 13267, 13383); and
4. Sample or monitor, at reasonable times, for the purposes of assuring Order compliance or as otherwise authorized by the CWA or the Water Code, any substances or parameters at any location. (33 U.S.C § 1318(a)(4)(B); 40 C.F.R. § 122.41(i)(4); Wat. Code, §§ 13267, 13383.)

G. Bypass

1. Definitions
   a. “Bypass” means the intentional diversion of waste streams from any portion of a treatment facility. (40 C.F.R. § 122.41(m)(1)(i).)
   b. “Severe property damage” means substantial physical damage to property, damage to the treatment facilities, which causes them to become inoperable, or substantial and permanent loss of natural resources that can reasonably be expected to occur in the absence of a bypass. Severe property damage does not mean economic loss caused by delays in production. (40 C.F.R. § 122.41(m)(1)(ii).)
2. Bypass not exceeding limitations. The Discharger may allow any bypass to occur which does not cause exceedances of effluent limitations, but only if it is for essential maintenance to assure efficient operation. These bypasses are not subject to the provisions listed in Standard Provisions – Permit Compliance I.G.3, I.G.4, and I.G.5 below. (40 C.F.R. § 122.41(m)(2).)
3. Prohibition of bypass. Bypass is prohibited, and the Central Valley Water Board may take enforcement action against a Discharger for bypass, unless (40 C.F.R. § 122.41(m)(4)(i)):
   a. Bypass was unavoidable to prevent loss of life, personal injury, or severe property damage (40 C.F.R. § 122.41(m)(4)(i)(A));
   b. There were no feasible alternatives to the bypass, such as the use of auxiliary treatment facilities, retention of untreated wastes, or maintenance during normal periods of equipment downtime. This condition is not satisfied if adequate back-up equipment should have been installed in the exercise of reasonable engineering judgment to prevent a bypass that occurred during normal periods of equipment downtime or preventive maintenance (40 C.F.R. § 122.41(m)(4)(i)(B)); and
   c. The Discharger submitted notice to the Central Valley Water Board as required under Standard Provisions – Permit Compliance I.G.5 below. (40 C.F.R. § 122.41(m)(4)(i)(C).)
4. The Central Valley Water Board may approve an anticipated bypass, after considering its adverse effects, if the Central Valley Water Board determines that it will meet the three conditions listed in Standard Provisions – Permit Compliance I.G.3 above. (40 C.F.R. § 122.41(m)(4)(ii).)

5. Notice

   a. Anticipated bypass. If the Discharger knows in advance of the need for a bypass, it shall submit a notice, if possible at least 10 days before the date of the bypass. (40 C.F.R. § 122.41(m)(3)(i).)

   b. Unanticipated bypass. The Discharger shall submit notice of an unanticipated bypass as required in Standard Provisions - Reporting V.E below (24-hour notice). (40 C.F.R. § 122.41(m)(3)(ii).)

H. Upset

Upset means an exceptional incident in which there is unintentional and temporary noncompliance with technology based permit effluent limitations because of factors beyond the reasonable control of the Discharger. An upset does not include noncompliance to the extent caused by operational error, improperly designed treatment facilities, inadequate treatment facilities, lack of preventive maintenance, or careless or improper operation. (40 C.F.R. § 122.41(n)(1).)

1. Effect of an upset. An upset constitutes an affirmative defense to an action brought for noncompliance with such technology based permit effluent limitations if the requirements of Standard Provisions – Permit Compliance I.H.2 below are met. No determination made during administrative review of claims that noncompliance was caused by upset, and before an action for noncompliance, is final administrative action subject to judicial review. (40 C.F.R. § 122.41(n)(2).)

2. Conditions necessary for a demonstration of upset. A Discharger who wishes to establish the affirmative defense of upset shall demonstrate, through properly signed, contemporaneous operating logs or other relevant evidence that (40 C.F.R. § 122.41(n)(3)):

   a. An upset occurred and that the Discharger can identify the cause(s) of the upset (40 C.F.R. § 122.41(n)(3)(i));

   b. The permitted facility was, at the time, being properly operated (40 C.F.R. § 122.41(n)(3)(ii));

   c. The Discharger submitted notice of the upset as required in Standard Provisions – Reporting V.E.2.b below (24-hour notice) (40 C.F.R. § 122.41(n)(3)(iii)); and

   d. The Discharger complied with any remedial measures required under Standard Provisions – Permit Compliance I.C above. (40 C.F.R. § 122.41(n)(3)(iv).)

3. Burden of proof. In any enforcement proceeding, the Discharger seeking to establish the occurrence of an upset has the burden of proof. (40 C.F.R. § 122.41(n)(4).)

II. STANDARD PROVISIONS – PERMIT ACTION

A. General

This Order may be modified, revoked and reissued, or terminated for cause. The filing of a request by the Discharger for modification, revocation and reissuance, or termination, or a notification of planned changes or anticipated noncompliance does not stay any Order condition. (40 C.F.R. § 122.41(f).)

B. Duty to Reapply

If the Discharger wishes to continue an activity regulated by this Order after the expiration date of this Order, the Discharger must apply for and obtain a new permit. (40 C.F.R. § 122.41(b).)

C. Transfers

This Order is not transferable to any person except after notice to the Central Valley Water Board. The Central Valley Water Board may require modification or revocation and reissuance of the Order to change the name of the Discharger and incorporate such other requirements as may be necessary under the CWA and the Water Code. (40 C.F.R. § 122.41(l)(3);122.61.)

III. STANDARD PROVISIONS – MONITORING

A. Samples and measurements taken for the purpose of monitoring shall be representative of the monitored activity. (40 C.F.R. § 122.41(j)(1).)

B. Monitoring results must be conducted according to test procedures approved under 40 C.F.R. part 136 for the analyses of pollutants unless another method is required under 40 C.F.R. subchapters N or O. In the case of pollutants for which there are no approved methods under 40 C.F.R. part 136 or otherwise required under 40 C.F.R. subchapters N or O, monitoring must be conducted according to a test procedure specified in this Order for such pollutants. (40 C.F.R. § 122.41(j)(4);122.44(i)(1)(iv).)

IV. STANDARD PROVISIONS – RECORDS

A. Except for records of monitoring information required by this Order related to the Discharger's sewage sludge use and disposal activities, which shall be retained for a period of at least five years (or longer as required by 40 C.F.R. part 503), the Discharger shall retain records of all monitoring information, including all calibration and maintenance records and all original strip chart recordings for continuous monitoring instrumentation, copies of all reports required by this Order, and records of all data used to complete the application for this Order, for a period of at least three (3) years from the date of the sample, measurement, report or application. This period may be extended by request of the Central Valley Water Board Executive Officer at any time. (40 C.F.R. § 122.41(j)(2).)

B. Records of monitoring information shall include:

1. The date, exact place, and time of sampling or measurements (40 C.F.R. § 122.41(j)(3)(i));
2. The individual(s) who performed the sampling or measurements (40 C.F.R. § 122.41(j)(3)(ii));
3. The date(s) analyses were performed (40 C.F.R. § 122.41(j)(3)(iii));
4. The individual(s) who performed the analyses (40 C.F.R. § 122.41(j)(3)(iv));
5. The analytical techniques or methods used (40 C.F.R. § 122.41(j)(3)(v)); and
6. The results of such analyses. (40 C.F.R. § 122.41(j)(3)(vi).)

C. Claims of confidentiality for the following information will be denied (40 C.F.R. § 122.7(b)):

1. The name and address of any permit applicant or Discharger (40 C.F.R. § 122.7(b)(1)); and
2. Permit applications and attachments, permits and effluent data. (40 C.F.R. § 122.7(b)(2).)

V. STANDARD PROVISIONS – REPORTING

A. Duty to Provide Information

The Discharger shall furnish to the Central Valley Water Board, State Water Board, or U.S. EPA within a reasonable time, any information which the Central Valley Water Board, State

Water Board, or U.S. EPA may request to determine whether cause exists for modifying, revoking and reissuing, or terminating this Order or to determine compliance with this Order. Upon request, the Discharger shall also furnish to the Central Valley Water Board, State Water Board, or U.S. EPA copies of records required to be kept by this Order. (40 C.F.R. § 122.41(h); Wat. Code, §§ 13267, 13383.)

B. Signatory and Certification Requirements

1. All applications, reports, or information submitted to the Central Valley Water Board, State Water Board, and/or U.S. EPA shall be signed and certified in accordance with Standard Provisions – Reporting V.B.2, V.B.3, V.B.4, and V.B.5 below. (40 C.F.R. § 122.41(k).)

2. All permit applications shall be signed by either a principal executive officer or ranking elected official. For purposes of this provision, a principal executive officer of a federal agency includes: (i) the chief executive officer of the agency, or (ii) a senior executive officer having responsibility for the overall operations of a principal geographic unit of the agency (e.g., Regional Administrators of U.S. EPA). (40 C.F.R. § 122.22(a)(3).).

3. All reports required by this Order and other information requested by the Central Valley Water Board, State Water Board, or U.S. EPA shall be signed by a person described in Standard Provisions – Reporting V.B.2 above, or by a duly authorized representative of that person. A person is a duly authorized representative only if:

   a. The authorization is made in writing by a person described in Standard Provisions – Reporting V.B.2 above (40 C.F.R. § 122.22(b)(1));

   b. The authorization specifies either an individual or a position having responsibility for the overall operation of the regulated facility or activity such as the position of plant manager, operator of a well or a well field, superintendent, position of equivalent responsibility, or an individual or position having overall responsibility for environmental matters for the company. (A duly authorized representative may thus be either a named individual or any individual occupying a named position.) (40 C.F.R. § 122.22(b)(2)); and

   c. The written authorization is submitted to the Central Valley Water Board and State Water Board. (40 C.F.R. § 122.22(b)(3).)

4. If an authorization under Standard Provisions – Reporting V.B.3 above is no longer accurate because a different individual or position has responsibility for the overall operation of the facility, a new authorization satisfying the requirements of Standard Provisions – Reporting V.B.3 above must be submitted to the Central Valley Water Board and State Water Board prior to or together with any reports, information, or applications, to be signed by an authorized representative. (40 C.F.R. § 122.22(c).)

5. Any person signing a document under Standard Provisions – Reporting V.B.2 or V.B.3 above shall make the following certification:

   "I certify under penalty of law that this document and all attachments were prepared under my direction or supervision in accordance with a system designed to assure that qualified personnel properly gather and evaluate the information submitted. Based on my inquiry of the person or persons who manage the system or those persons directly responsible for gathering the information, the information submitted is, to the best of my knowledge and belief, true, accurate, and complete. I am aware that there are significant penalties for submitting false information, including the possibility of fine and imprisonment for knowing violations." (40 C.F.R. § 122.22(d).)

C. Monitoring Reports

1. Monitoring results shall be reported at the intervals specified in the Monitoring and Reporting Program (Attachment E) in this Order. (40 C.F.R. § 122.41(l)(4).)
2. Monitoring results must be reported on a Discharge Monitoring Report (DMR) form or forms provided or specified by the Central Valley Water Board or State Water Board for reporting results of monitoring of sludge use or disposal practices. (40 C.F.R. § 122.41(l)(4)(i).)
3. If the Discharger monitors any pollutant more frequently than required by this Order using test procedures approved under 40 C.F.R. part 136, or another method required for an industry-specific waste stream under 40 C.F.R. subchapters N or O, the results of such monitoring shall be included in the calculation and reporting of the data submitted in the DMR or sludge reporting form specified by the Central Valley Water Board. (40 C.F.R. § 122.41(l)(4)(ii).)
4. Calculations for all limitations, which require averaging of measurements, shall utilize an arithmetic mean unless otherwise specified in this Order. (40 C.F.R. § 122.41(l)(4)(iii).)

D. Compliance Schedules

Reports of compliance or noncompliance with, or any progress reports on, interim and final requirements contained in any compliance schedule of this Order, shall be submitted no later than 14 days following each schedule date. (40 C.F.R. § 122.41(l)(5).)

E. Twenty-Four Hour Reporting

1. The Discharger shall report any noncompliance that may endanger health or the environment. Any information shall be provided orally within 24 hours from the time the Discharger becomes aware of the circumstances. A written submission shall also be provided within five (5) days of the time the Discharger becomes aware of the circumstances. The written submission shall contain a description of the noncompliance and its cause; the period of noncompliance, including exact dates and times, and if the noncompliance has not been corrected, the anticipated time it is expected to continue; and steps taken or planned to reduce, eliminate, and prevent reoccurrence of the noncompliance. (40 C.F.R. § 122.41(l)(6)(i).)
2. The following shall be included as information that must be reported within 24 hours under this paragraph (40 C.F.R. § 122.41(l)(6)(ii)):
   a. Any unanticipated bypass that exceeds any effluent limitation in this Order. (40 C.F.R. § 122.41(l)(6)(ii)(A).)
   b. Any upset that exceeds any effluent limitation in this Order. (40 C.F.R. § 122.41(l)(6)(ii)(B).)
3. The Central Valley Water Board may waive the above-required written report under this provision on a case-by-case basis if an oral report has been received within 24 hours. (40 C.F.R. § 122.41(l)(6)(iii).)

F. Planned Changes

The Discharger shall give notice to the Central Valley Water Board as soon as possible of any planned physical alterations or additions to the permitted facility. Notice is required under this provision only when (40 C.F.R. § 122.41(l)(1)):

1. The alteration or addition to a permitted facility may meet one of the criteria for determining whether a facility is a new source in section 122.29(b) (40 C.F.R. § 122.41(l)(1)(i)); or

2. The alteration or addition could significantly change the nature or increase the quantity of pollutants discharged. This notification applies to pollutants that are not subject to effluent limitations in this Order. (40 C.F.R. § 122.41(l)(1)(ii).)

3. The alteration or addition results in a significant change in the Discharger's sludge use or disposal practices, and such alteration, addition, or change may justify the application of permit conditions that are different from or absent in the existing permit, including notification of additional use or disposal sites not reported during the permit application process or not reported pursuant to an approved land application plan. (40 C.F.R.§ 122.41(l)(1)(iii).)

G. Anticipated Noncompliance

The Discharger shall give advance notice to the Central Valley Water Board or State Water Board of any planned changes in the permitted facility or activity that may result in noncompliance with this Order's requirements. (40 C.F.R. § 122.41(l)(2).)

H. Other Noncompliance

The Discharger shall report all instances of noncompliance not reported under Standard Provisions – Reporting V.C, V.D, and V.E above at the time monitoring reports are submitted. The reports shall contain the information listed in Standard Provision – Reporting V.E above. (40 C.F.R. § 122.41(l)(7).)

I. Other Information

When the Discharger becomes aware that it failed to submit any relevant facts in a permit application, or submitted incorrect information in a permit application or in any report to the Central Valley Water Board**,** State Water Board, or U.S. EPA, the Discharger shall promptly submit such facts or information. (40 C.F.R. § 122.41(l)(8).)

VI. STANDARD PROVISIONS – ENFORCEMENT

A. The Central Valley Water Board is authorized to enforce the terms of this permit under several provisions of the Water Code, including, but not limited to, sections 13385, 13386, and 13387.

VII. ADDITIONAL PROVISIONS – NOTIFICATION LEVELS

A. Publicly-Owned Treatment Works (POTWs)

All POTWs shall provide adequate notice to the Central Valley Water Board of the following (40 C.F.R. § 122.42(b)):

1. Any new introduction of pollutants into the POTW from an indirect discharger that would be subject to sections 301 or 306 of the CWA if it were directly discharging those pollutants (40 C.F.R. § 122.42(b)(1)); and

2. Any substantial change in the volume or character of pollutants being introduced into that POTW by a source introducing pollutants into the POTW at the time of adoption of the Order. (40 C.F.R. § 122.42(b)(2).)

3. Adequate notice shall include information on the quality and quantity of effluent introduced into the POTW as well as any anticipated impact of the change on the quantity or quality of effluent to be discharged from the POTW. (40 C.F.R. § 122.42(b)(3).)

ATTACHMENT E – MONITORING AND REPORTING PROGRAM

Contents

I. General Monitoring Provisions E-2
II. Monitoring Locations E-3
III. Influent Monitoring Requirements E-4
  A. Monitoring Location INF-001 ..... E-4
IV. Effluent Monitoring Requirements E-5
  A. Monitoring Location EFF-001 ..... E-5
V. Whole Effluent Toxicity Testing Requirements E-6
VI. Land Discharge Monitoring Requirements E-9
  A. Monitoring Locations PND-001 through PND-013 ..... E-9
VII. Recycling Monitoring Requirements – NOT APPLICABLE E-9
VIII. Receiving Water Monitoring Requirements E-9
  A. Monitoring Locations RSW-001, RSW-002, and RSW-003 ..... E-10
  B. Monitoring Locations RGW-001 through RGW-011 ..... E-11
IX. Other Monitoring Requirements E-12
  A. Biosolids E-12
  B. Municipal Water Supply E-12
  C. Filtration System and Ultraviolet Light (UV) Disinfection System E-13
  D. Effluent and Receiving Water Characterization E-13
X. Reporting Requirements E-17
  A. General Monitoring and Reporting Requirements E-17
  B. Self-Monitoring Reports (SMRs) E-18
  C. Discharge Monitoring Reports (DMRs) E-21
  D. Other Reports E-21

Tables

Table E-1. Monitoring Station Locations E-3
Table E-2. Influent Monitoring E-4
Table E-3. Effluent Monitoring E-5
Table E-4. Chronic Toxicity Testing Dilution Series for TRE Investigation E-7
Table E-5. Storage Pond Monitoring Requirements E-9
Table E-6. Receiving Water Monitoring Requirements – Monitoring Locations RSW-001 and RSW-002 ..... E-10
Table E-7. Receiving Water Monitoring Requirements – Monitoring Location RSW-003 ..... E-11
Table E-8. Groundwater Monitoring Requirements E-11
Table E-9. Municipal Water Supply Monitoring Requirements E-12
Table E-10. Filtration System and UV Disinfection System Monitoring Requirements E-13
Table E-11. Effluent and Receiving Water Characterization Monitoring E-14
Table E-12. Monitoring Periods and Reporting Schedule E-18
Table E-13. Reporting Requirements for Special Provisions Reports E-21

ATTACHMENT E – MONITORING AND REPORTING PROGRAM (MRP)

The Code of Federal Regulations (40 C.F.R. § 122.48) requires that all NPDES permits specify monitoring and reporting requirements. Water Code sections 13267 and 13383 also authorize the Central Valley Water Board to require technical and monitoring reports. This MRP establishes monitoring and reporting requirements that implement federal and California regulations.

I. GENERAL MONITORING PROVISIONS

A. Samples and measurements taken as required herein shall be representative of the volume and nature of the monitored discharge. All samples shall be taken at the monitoring locations specified below and, unless otherwise specified, before the monitored flow joins or is diluted by any other waste stream, body of water, or substance. Monitoring locations shall not be changed without notification to and the approval of the Central Valley Water Board.

B. Effluent samples shall be taken downstream of the last addition of wastes to the treatment or discharge works where a representative sample may be obtained prior to mixing with the receiving waters. Samples shall be collected at such a point and in such a manner to ensure a representative sample of the discharge.

C. Chemical, bacteriological, and bioassay analyses of any material required by this Order shall be conducted by a laboratory certified for such analyses by the Department of Public Health (DPH). Laboratories that perform sample analyses must be identified in all monitoring reports submitted to the Central Valley Water Board. In the event a certified laboratory is not available to the Discharger for any onsite field measurements such as pH, DO, turbidity, temperature, and residual chlorine, such analyses performed by a noncertified laboratory will be accepted provided a Quality Assurance-Quality Control Program is instituted by the laboratory. A manual containing the steps followed in this program for any onsite field measurements such as pH, DO, turbidity, temperature, and residual chlorine must be kept onsite in the treatment facility laboratory and shall be available for inspection by Central Valley Water Board staff. The Discharger must demonstrate sufficient capability (qualified and trained employees, properly calibrated and maintained field instruments, etc.) to adequately perform these field measurements. The Quality Assurance-Quality Control Program must conform to U.S. EPA guidelines or to procedures approved by the Central Valley Water Board.

D. Appropriate flow measurement devices and methods consistent with accepted scientific practices shall be selected and used to ensure the accuracy and reliability of measurements of the volume of monitored discharges. All monitoring instruments and devices used by the Discharger to fulfill the prescribed monitoring program shall be properly maintained and calibrated as necessary, at least yearly, to ensure their continued accuracy. All flow measurement devices shall be calibrated at least once per year to ensure continued accuracy of the devices.

E. Monitoring results, including noncompliance, shall be reported at intervals and in a manner specified in this Monitoring and Reporting Program.

F. Laboratories analyzing monitoring samples shall be certified by DPH, in accordance with the provision of Water Code section 13176, and must include quality assurance/quality control data with their reports.

G. The Discharger shall ensure that the results of the Discharge Monitoring Report-Quality Assurance (DMR-QA) Study or the most recent Water Pollution Performance Evaluation Study are submitted annually to the State Water Resources Control Board at the following address:

State Water Resources Control Board Quality Assurance Program Officer
Office of Information Management and Analysis
State Water Resources Control Board
1001 I Street, Sacramento, CA 95814

H. The Discharger shall file with the Central Valley Water Board technical reports on self-monitoring performed according to the detailed specifications contained in this Monitoring and Reporting Program.

I. The results of all monitoring required by this Order shall be reported to the Central Valley Water Board, and shall be submitted in such a format as to allow direct comparison with the limitations and requirements of this Order. Unless otherwise specified, discharge flows shall be reported in terms of the monthly average and the daily maximum discharge flows.

II. MONITORING LOCATIONS

The Discharger shall establish the following monitoring locations to demonstrate compliance with the effluent limitations, discharge specifications, and other requirements in this Order:

Table E-1. Monitoring Station Locations

Discharge Point Name	Monitoring Location Name	Monitoring Location Description
--	INF-001	A location where a representative sample of the influent into the Facility can be collected prior to entering the treatment process.
001	EFF-001	A location where a representative sample of the effluent from the Facility can be collected after all treatment processes and prior to commingling with other waste streams or being discharged to Tule Canal. Latitude: 38° 40’ 51” N, Longitude: 121° 38’ 38” W
--	RSW-001	approximately 800 feet upstream of Discharge Point 001 in Tule Canal
--	RSW-002	approximately 1,800 feet downstream of Discharge Point 001 in Tule Canal
--	RSW-003	In Tule Canal between Monitoring Locations RSW-001 and RSW-002.
--	GW-01	Groundwater monitoring well (identified as MW-1 in the Discharger’s groundwater monitoring reports)
--	GW-02	Groundwater monitoring well (identified as MW-2 in the Discharger’s groundwater monitoring reports)
--	GW-04	Groundwater monitoring well (identified as MW-4 in the Discharger’s groundwater monitoring reports)
--	GW-06	Groundwater monitoring well (identified as MW-6 in the Discharger’s groundwater monitoring reports)
--	GW-09	Groundwater monitoring well (identified as MW-9 in the Discharger’s groundwater monitoring reports)
--	GW-10	Groundwater monitoring well (identified as MW-10 in the Discharger’s groundwater monitoring reports)
--	GW-11	Groundwater monitoring well (identified as MW-11 in the Discharger’s groundwater monitoring reports)
--	GW-12	Groundwater monitoring well (identified as MW-12 in the Discharger’s groundwater monitoring reports)
--	GW-13	Groundwater monitoring well (identified as MW-13 in the Discharger’s groundwater monitoring reports)

Discharge Point Name	Monitoring Location Name	Monitoring Location Description
--	BIO-001	A location where a representative sample of the biosolids can be obtained.
--	SPL-001	A location where a representative sample of the municipal water supply can be obtained.
--	FIL-001	Monitoring of the filter effluent to be measured immediately downstream of the filters prior to the ultraviolet (UV) disinfection system.
--	UVS-001	A location where a representative sample of wastewater can be collected immediately upstream of the UV disinfection system.
--	UVS-002	A location where a representative sample of wastewater can be collected immediately downstream of the UV disinfection system.
--	PND-001	South Pond 1
--	PND-002	South Pond 2
--	PND-003	South Pond 3
--	PND-004	South Pond 4
--	PND-005	South Pond 5
--	PND-006	South Pond 6
--	PND-007	South Pond 7
--	PND-008	South Pond 8
--	PND-009	South Pond 9
--	PND-010	South Pond 10
--	PND-011	South Pond 11
--	PND-012	South Pond 12
--	PND-013	Erskine Pond

The North latitude and West longitude information in Table 1 are approximate for administrative purposes.

III. INFLUENT MONITORING REQUIREMENTS

A. Monitoring Location INF-001

1. The Discharger shall monitor influent to the Facility at Monitoring Location INF-001 as follows:

Table E-2. Influent Monitoring

Parameter	Units	Sample Type	Minimum Sampling Frequency	Required Analytical Test Method
Flow	MGD	Meter	Continuous	--
Conventional Pollutants				
Biochemical Oxygen Demand (5-day @ 20°C)	mg/L	24-hr Composite[1]	1/Week	[2]
Total Suspended Solids	mg/L	24-hr Composite[1]	1/Week	[2]
Non-Conventional Pollutants				
Electrical Conductivity @ 25°C	µmhos/cm	Grab	1/Week	[2]

Parameter	Units	Sample Type	Minimum Sampling Frequency	Required Analytical Test Method

[1] 24-hour flow proportional composite.
[2] Pollutants shall be analyzed using the analytical methods described in 40 CFR Part 136; or by methods approved by the Central Valley Water Board or the State Water Board.

IV. EFFLUENT MONITORING REQUIREMENTS

A. Monitoring Location EFF-001

1. The Discharger shall monitor tertiary treated effluent at Monitoring Location EFF-001 as follows. If more than one analytical test method is listed for a given parameter, the Discharger must select from the listed methods and corresponding Minimum Level:

Table E-3. Effluent Monitoring

Parameter	Units	Sample Type	Minimum Sampling Frequency	Required Analytical Test Method
Flow	MGD	Meter	Continuous	--
Conventional Pollutants				
Biochemical Oxygen Demand (5-day @ 20°C)	mg/L	24-hr Composite[1]	3/Week	[2]
	lbs/day	Calculate	3/Week	--
pH	standard units	Grab	3/Week[3,4]	[1]
Total Suspended Solids	mg/L	24-hr Composite[1]	3/Week	[2]
	lbs/day	Calculate	3/Week	--
Priority Pollutants				
Bis (2-ethylhexyl) phthalate	µg/L	Grab	1/Quarter	[2,5,6]
Mercury, Total Recoverable	ng/L	Grab	1/Month	[2,6,7]
	lbs/month	Calculate	1/Month	--
Selenium, Total Recoverable	µg/L	Grab	1/Month	[2,6]
	lbs/day	Calculate	1/Month	--
Priority Pollutants and Other Constituents of Concern	See Section IX.D	See Section IX.D	See Section IX.D	[2,6]
Non-Conventional Pollutants				
Ammonia Nitrogen, Total (as N)	mg/L	Grab	3/Week[3,8]	[2]
	lbs/day	Calculate	3/Week	--
Boron, Total Recoverable	mg/L	Grab	2/Year	[2]
Chlorine, Total Residual	mg/L	Meter	1/Day[9]	[2]
Chlorpyrifos	µg/L	Grab	1/Year[10]	[2]
Diazinon	µg/L	Grab	1/Year[10]	[2]
Electrical Conductivity @ 25°C	µmhos/cm	Grab	1/Week	[2]
Hardness, Total (as $CaCO_3$)	mg/L	Grab	1/Month[11]	[2]
Methylmercury	ng/L	Grab	1/Month	[2,7]
Nitrate Nitrogen, Total (as N)	mg/L	Grab	1/Month	[2]
Temperature	°F	Grab	3/Week[3,4]	[2]
Total Dissolved Solids	mg/L	Grab	1/Month	[2]

Parameter	Units	Sample Type	Minimum Sampling Frequency	Required Analytical Test Method

[1] 24-hour flow proportional composite.
[2] Pollutants shall be analyzed using the analytical methods described in 40 CFR Part 136 or by methods approved by the Central Valley Water Board or the State Water Board.
[3] pH and temperature shall be recorded at the time of ammonia sample collection.
[4] A hand-held field meter may be used, provided the meter utilizes a U.S. EPA-approved algorithm/method and is calibrated and maintained in accordance with the manufacturer's instructions. A calibration and maintenance log for each meter used for monitoring required by this Monitoring and Reporting Program shall be maintained at the Facility.
[5] In order to verify if bis (2-ethylhexyl) phthalate is truly present in the effluent discharge, the Discharger shall take steps to assure that sample containers, sampling apparatus, and analytical equipment are not sources of the detected contaminant.
[6] For priority pollutant constituents the reporting level shall be consistent with Sections 2.4.2 and 2.4.3 of the *Policy for Implementation of Toxics Standards for Inland Surface Waters, Enclosed Bays, and Estuaries of California* (See Attachment E, Section IX.D).
[7] Unfiltered methylmercury and total mercury samples shall be taken using clean hands/dirty hands procedures, as described in U.S. EPA method 1669: Sampling Ambient Water for Trace Metals at EPA Water Quality Criteria Levels, for collection of equipment blanks (section 9.4.4.2), and shall be analyzed by U.S. EPA method 1630/1631 (Revision E) with a reporting level of 0.05 ng/L for methylmercury and 0.5 ng/L for total mercury.
[8] Concurrent with whole effluent toxicity monitoring.
[9] Total chlorine residual must be monitored with a method sensitive to and accurate at the permitted level of 0.01 mg/L. Total chlorine residual monitoring is only required when chlorine or chlorine-containing products are used in the treatment process. When chlorine or chlorine-containing products are not in use in the treatment process, the Discharger shall so state in the monthly self-monitoring report.
[10] Monitoring for diazinon and chlorpyrifos is only required from December through May and during periods when the Yolo Bypass is flooded. If the Yolo Bypass is not flooded within a given calendar year and thus, monitoring for diazinon and chlorpyrifos is not conducted, the Discharger shall so state in the annual self-monitoring report.
[11] Hardness samples shall be collected concurrently with metals samples.

V. WHOLE EFFLUENT TOXICITY TESTING REQUIREMENTS

A. Acute Toxicity Testing. The Discharger shall conduct acute toxicity testing to determine whether the effluent is contributing acute toxicity to the receiving water. The Discharger shall meet the following acute toxicity testing requirements:

1. *Monitoring Frequency* – The Discharger shall perform quarterly acute toxicity testing, concurrent with effluent ammonia sampling.

2. *Sample Types* – The Discharger may use flow-through or static renewal testing. For static renewal testing, the samples shall be grab samples and shall be representative of the volume and quality of the discharge. The effluent samples shall be taken at Monitoring Location EFF-001.

3. *Test Species* – Test species shall be fathead minnows (*Pimephales promelas*).

4. *Methods* – The acute toxicity testing samples shall be analyzed using EPA-821-R-02-012, Fifth Edition. Temperature, total residual chlorine, and pH shall be recorded at the time of sample collection. No pH adjustment may be made unless approved by the Executive Officer.

5. *Test Failure* – If an acute toxicity test does not meet all test acceptability criteria, as specified in the test method, the Discharger must re-sample and re-test as soon as possible, not to exceed 7 days following notification of test failure.

B. Chronic Toxicity Testing. The Discharger shall conduct three species chronic toxicity testing to determine whether the effluent is contributing chronic toxicity to the receiving water. The Discharger shall meet the following chronic toxicity testing requirements:

1. *Monitoring Frequency –* The Discharger shall perform quarterly three species chronic toxicity testing.

2. *Sample Types* – Effluent samples shall be flow proportional 24-hour composites and shall be representative of the volume and quality of the discharge. The effluent samples shall be taken at Monitoring Location EFF-001. The receiving water control shall be a grab sample obtained from Monitoring Location RSW-001, as identified in this Monitoring and Reporting Program.

3. *Sample Volumes* – Adequate sample volumes shall be collected to provide renewal water to complete the test in the event that the discharge is intermittent.

4. *Test Species* – Chronic toxicity testing measures sublethal (e.g., reduced growth, reproduction) and/or lethal effects to test organisms exposed to an effluent compared to that of the control organisms. The Discharger shall conduct chronic toxicity tests with:

   a. The cladoceran, water flea, *Ceriodaphnia dubia* (survival and reproduction test);

   b. The fathead minnow, *Pimephales promelas* (larval survival and growth test); and

   c. The green alga, *Selenastrum capricornutum* (growth test).

5. *Methods* – The presence of chronic toxicity shall be estimated as specified in *Short-term Methods for Estimating the Chronic Toxicity of Effluents and Receiving Waters to Freshwater Organisms, Fourth Edition*, EPA/821-R-02-013, October 2002.

6. *Reference Toxicant* – As required by the SIP, all chronic toxicity tests shall be conducted with concurrent testing with a reference toxicant and shall be reported with the chronic toxicity test results.

7. *Dilutions* – For routine and accelerated chronic toxicity monitoring, it is not necessary to perform the test using a dilution series. The test may be performed using 100% effluent and one control. For TRE monitoring, the chronic toxicity testing shall be performed using the dilution series identified in Table E-4, below, unless an alternative dilution series is detailed in the submitted TRE Action Plan. A receiving water control or laboratory water control may be used as the diluent.

Table E-4. Chronic Toxicity Testing Dilution Series for TRE Investigation

Sample	Dilutions[1] (%)					Control
	100	75	50	25	12.5	
% Effluent	100	75	50	25	12.5	0
% Control Water	0	25	50	75	87.5	100

[1] Receiving water control or laboratory water control may be used as the diluent.

8. *Test Failure* – The Discharger must re-sample and re-test as soon as possible, but no later than fourteen (14) days after receiving notification of a test failure. A test failure is defined as follows:

   a. The reference toxicant test or the effluent test does not meet all test acceptability criteria as specified in the *Short-term Methods for Estimating the Chronic Toxicity of Effluents and Receiving Waters to Freshwater Organisms, Fourth Edition*, EPA/821-R-02-013, October 2002 (Method Manual), and its subsequent amendments or revisions; or

b. The percent minimum significant difference (PMSD) measured for the test exceeds the upper PMSD bound variability criterion in Table 6 on page 52 of the Method Manual. (A retest is only required in this case if the test results do not exceed the monitoring trigger specified in the Special Provision at section VI. 2.a.iii. of the Order.)

C. WET Testing Notification Requirements. The Discharger shall notify the Central Valley Water Board within 24-hours after the receipt of test results exceeding the monitoring trigger during regular or accelerated monitoring, or an exceedance of the acute toxicity effluent limitation.

D. WET Testing Reporting Requirements. All toxicity test reports shall include the contracting laboratory's complete report provided to the Discharger and shall be in accordance with the appropriate "Report Preparation and Test Review" sections of the method manuals. At a minimum, whole effluent toxicity monitoring shall be reported as follows:

1. **Chronic WET Reporting.** Regular chronic toxicity monitoring results shall be reported to the Central Valley Water Board within 30 days following completion of the test, and shall contain, at minimum:

   a. The results expressed in TUc, measured as 100/NOEC, and also measured as 100/LC50, 100/EC25, 100/IC25, and 100/IC50, as appropriate.

   b. The statistical methods used to calculate endpoints;

   c. The statistical output page, which includes the calculation of the percent minimum significant difference (PMSD);

   d. The dates of sample collection and initiation of each toxicity test; and

   e. The results compared to the numeric toxicity monitoring trigger.

   Additionally, the monthly discharger self-monitoring reports shall contain an updated chronology of chronic toxicity test results expressed in TUc, and organized by test species, type of test (survival, growth or reproduction), and monitoring frequency, i.e., either quarterly, monthly, accelerated, or Toxicity Reduction Evaluation (TRE).

2. **Acute WET Reporting.** Acute toxicity test results shall be submitted with the monthly discharger self-monitoring reports and reported as percent survival.

3. **TRE Reporting.** Reports for TREs shall be submitted in accordance with the schedule contained in the Discharger's approved TRE Workplan, or as amended by the Discharger's TRE Action Plan.

4. **Quality Assurance (QA).** The Discharger must provide the following information for QA purposes:

   a. Results of the applicable reference toxicant data with the statistical output page giving the species, NOEC, LOEC, type of toxicant, dilution water used, concentrations used, PMSD, and dates tested.

   b. The reference toxicant control charts for each endpoint, which include summaries of reference toxicant tests performed by the contracting laboratory.

   c. Any information on deviations or problems encountered and how they were dealt with.

VI. LAND DISCHARGE MONITORING REQUIREMENTS

A. Monitoring Locations PND-001 through PND-013

1. The Discharger shall monitor the 12 South Ponds and the Erskine Pond at Monitoring Locations PND-001 through PND-013 as follows:

Table E-5. Storage Pond Monitoring Requirements

Parameter	Units	Sample Type	Minimum Sampling Frequency	Required Analytical Test Method
Freeboard	Feet, inches	Measurement	1/Month	--
Electrical Conductivity @ 25°C	µmhos/cm	Grab	1/Month	[1]
Color	--	Observation	1/Month	--
Odor	--	Observation	1/Month	--
Levee Condition	--	Observation	1/Month	--

[1] Pollutant shall be analyzed using the analytical methods described in 40 CFR Part 136 or by methods approved by the Central Valley Water Board or the State Water Board.

VII. RECYCLING MONITORING REQUIREMENTS – NOT APPLICABLE

VIII. RECEIVING WATER MONITORING REQUIREMENTS

The Discharger shall implement the Receiving Water Monitoring Requirements in Attachment E, Sections VIII.A.1 and VIII.A.3 of this Order. However, in lieu of conducting the individual monitoring specified in Attachment E, Sections VIII.A.1 and VIII.a.3 of this Order (including visual observations), the Discharger may elect to participate in the Delta Regional Monitoring Program (RMP). The Discharger may choose to conduct all or part of the receiving water monitoring through the Delta RMP. If the Discharger elects to cease all or part of the individual receiving water monitoring and instead participates in the Delta RMP, the Discharger shall submit a letter signed by an authorized representative informing the Central Valley Water Board that the Discharger will participate in the Delta RMP, and the date on which individual receiving water monitoring required under Attachment E, Sections VIII.A.1 and VIII.A.3 will cease, or be modified, and specific monitoring locations and constituent combinations that will no longer be conducted individually. Approval by the Executive Officer is not required prior to participating in the Delta RMP.

If the Discharger participates in the Delta RMP in lieu of conducting individual receiving water monitoring, the Discharger shall continue to participate in the Delta RMP until such time as the Discharger informs the Central Valley Water Board that participation in the Delta RMP will cease and individual monitoring is reinstituted. Receiving water monitoring under Attachment E, Sections VIII.A.1 and VIII.A.3, is not required under this Order so long as the Discharger adequately supports the Delta RMP. If the Discharger fails to adequately support the Delta RMP, the Discharger shall reinstitute individual receiving water monitoring under Attachment E, Sections VIII.A.1 and VIII.A.3, upon written notice from the Executive Officer. During the participation in the Delta RMP, the Discharger may, however, conduct any or part of the receiving water monitoring deemed appropriate by the Discharger which is not conducted by the Delta RMP and submit that monitoring data as required in the Monitoring and Reporting Program.

Delta RMP data is not intended to be used directly to represent either upstream or downstream water quality for purposes of determining compliance with this Permit. Delta RMP monitoring stations are established generally as “integrator sites” to evaluate the combined impacts on water quality of multiple discharges into the Delta; Delta RMP monitoring stations would not normally be able to identify the source of any specific constituent, but would be used to identify water quality issues needing further evaluation. Delta RMP monitoring data, along with individual Discharger data, may be used to help establish background receiving water quality for reasonable potential

analyses in an NPDES Permit after evaluation of the applicability of the data for that purpose. Delta RMP data, as with all environmental monitoring data, can provide an assessment of water quality at a specific place and time that can be used in conjunction with other information, such as other receiving water monitoring data, spatial and temporal distribution and trends of receiving water data, effluent data from the Discharger's discharge and other point and non-point source discharges, receiving water flow volume, speed and direction, and other information to determine the likely source or sources of a constituent that resulted in exceedance of a receiving water quality objective.

During the period of participation in the Delta RMP, the Discharger shall continue to report any individually conducted receiving water monitoring data in the Electronic Self-Monitoring Reports (eSMR) according to the Monitoring and Reporting Program. In addition, with each submitted eSMR, 1) the Discharger's eSMR cover letter shall state that the Discharger is participating in the Delta RMP in lieu of conducting the individual receiving water monitoring program required by the permit, and 2) the Discharger shall attach the letter originally submitted to the Central Valley Water Board describing the monitoring location(s) and constituent combinations that will no longer be conducted individually.

A. Monitoring Locations RSW-001, RSW-002, and RSW-003

1. The Discharger shall monitor Tule Canal at Monitoring Locations RSW-001 and RSW-002 as follows:

Table E-6. Receiving Water Monitoring Requirements – Monitoring Locations RSW-001 and RSW-002

Parameter	Units	Sample Type	Minimum Sampling Frequency[1]	Required Analytical Test Method
Conventional Pollutants				
pH	standard units	Grab	1/Week	[2]
Priority Pollutants				
Priority Pollutants and Other Constituents of Concern[3]	See Section IX.D	See Section IX.D	See Section IX.D	[2]
Non-Conventional Pollutants				
Dissolved Oxygen	mg/L	Grab	1/Week	[2]
Electrical Conductivity @ 25˚C	µmhos/cm	Grab	1/Week[4]	[2]
Hardness, Total (as $CaCO_3$)	mg/L	Grab	1/Month	[2]
Temperature	˚F(˚C)	Grab	1/Week	[2]

[1] Due to flooded conditions in the Yolo Bypass during wet weather periods, it can be unsafe to obtain samples at Monitoring Locations RSW-001 and RSW-002. When the Discharger is unable to sample Monitoring Locations RSW-001 and/or RSW-002, it shall be so noted on the monthly self-monitoring report.

[2] Pollutants shall be analyzed using the analytical methods described in 40 CFR Part 136 or by methods approved by the Central Valley Water Board or the State Water Board.

[3] Monitoring required at Monitoring Location RSW-001 only.

[4] Monitoring required at Monitoring Location RSW-002 only.

2. The Discharger shall monitor Tule Canal at Monitoring Location RSW-003 as follows:

Table E-7. Receiving Water Monitoring Requirements – Monitoring Location RSW-003

Parameter	Units	Sample Type	Minimum Sampling Frequency[1]	Required Analytical Test Method
Flow	cfs	Measure	1/Week	--
	MGD	Calculate	1/Week	

[1] Due to flooded conditions in the Yolo Bypass during wet weather periods, it can be unsafe to obtain samples at Monitoring Location RSW-003. When the Discharger is unable to sample Monitoring Location RSW-003, it shall be so noted on the monthly self-monitoring report.

3. In conducting the receiving water sampling, a log shall be kept of the receiving water conditions throughout the reach bounded by Monitoring Locations RSW-001 and RSW-002. Attention shall be given to the presence or absence of:

   a. Floating or suspended matter;
   b. Discoloration;
   c. Bottom deposits;
   d. Aquatic life;
   e. Visible films, sheens, or coatings;
   f. Fungi, slimes, or objectionable growths;
   g. Potential nuisance conditions.

   Notes on the receiving water conditions shall be summarized in the monitoring report.

B. Monitoring Locations GW-01, GW-02, GW-04, GW-06, and GW-09 through GW-13

1. Prior to sampling, the groundwater elevations shall be measured and the wells shall be purged of at least three well volumes until temperature, pH, and electrical conductivity have stabilized. Depth to groundwater shall be measured to the nearest 0.01 feet. Groundwater monitoring at Monitoring Locations GW-04, GW-12, and GW-13 is only required for depth to groundwater and groundwater elevation. Groundwater monitoring at Monitoring Locations GW-01, GW-02, GW-06, and GW-09 through GW-11, and any new groundwater monitoring wells, shall include, at a minimum, the following:

Table E-8. Groundwater Monitoring Requirements

Parameter	Units	Sample Type	Minimum Sampling Frequency	Required Analytical Test Method
Depth to Groundwater	Feet	Measurement	1/Quarter[1]	--
Groundwater Elevation[2]	Feet/100	Calculated	1/Quarter[1]	--
pH[4]	standard units	Grab	1/Quarter[1]	[3]
Nitrate Plus Nitrite (as N)[4]	mg/L	Grab	1/Quarter[1]	[3]
Total Kjeldahl Nitrogen[4]	mg/L	Grab	1/Quarter[1]	[3]
Electrical Conductivity @ 25°C[4]	µmhos/cm	Grab	1/Quarter[1]	[3]
Total Dissolved Solids[4]	mg/L	Grab	1/Quarter[1]	[3]
Total Coliform Organisms[4]	MPN/100 mL	Grab	1/Quarter[1]	[3]

Parameter	Units	Sample Type	Minimum Sampling Frequency	Required Analytical Test Method

[1] Quarterly analysis is required at Monitoring Locations GW-02, GW-06, and GW-11. Annual analysis is required at background Monitoring Locations GW-01, GW-09, and GW-10.
[2] Groundwater elevation shall be determined based on depth-to-water measurements from a surveyed measuring point elevation on the well. The groundwater elevation shall be used to calculate the direction and gradient of groundwater flow, which must be reported.
[3] Pollutants shall be analyzed using the analytical methods described in 40 CFR Part 136 or by methods approved by the Central Valley Water Board or the State Water Board.
[4] Parameter is not required to be monitored at GW-04, GW-12, and GW-13.

IX. OTHER MONITORING REQUIREMENTS

A. Biosolids

1. Monitoring Location BIO-001

a. A composite sample of sludge shall be collected annually at Monitoring Location BIO-001 in accordance with EPA's *POTW Sludge Sampling and Analysis Guidance Document*, August 1989, and tested for priority pollutants listed in 40 CFR Part 122, Appendix D, Tables II and III (excluding total phenols).

b. Biosolids monitoring shall be conducted using the methods in Test Methods for Evaluating Solid Waste, Physical/Chemical methods (EPA publication SW-846), as required in 40 CFR 503.8(b)(4). All results must be reported on a 100% dry weight basis. Records of all analyses must state on each page of the laboratory report whether the results are expressed in “100% dry weight” or “as is.”

c. Sampling records shall be retained for a minimum of **5 years**. A log shall be maintained of sludge quantities generated and of handling and disposal activities. The frequency of entries is discretionary; however, the log must be complete enough to serve as a basis for part of the annual report.

B. Municipal Water Supply

1. Monitoring Location SPL-001

a. The Discharger shall monitor the municipal water supply at Monitoring Location SPL-001 as follows.

Table E-9. Municipal Water Supply Monitoring Requirements

Parameter	Units	Sample Type	Minimum Sampling Frequency	Required Analytical Test Method
Boron, Total Recoverable[1]	µg/L	Grab	1/Year	[2]
Selenium, Total Recoverable[1]	µg/L	Grab	1/Year	[2]
Electrical Conductivity @ 25°C[1]	µmhos/cm	Grab	1/Year	[2]
Total Dissolved Solids[1]	mg/L	Grab	1/Year	[2]

[1] If the water supply is from more than one source, the concentration shall be reported as a weighted average and include copies of supporting calculations.
[2] Pollutants shall be analyzed using the analytical methods described in 40 CFR Part 136 or by methods approved by the Central Valley Water Board or the State Water Board.

C. Filtration System and Ultraviolet Light (UV) Disinfection System

1. Monitoring Locations FIL-001, UVS-001, and UVS-002

a. The Discharger shall monitor the filtration system and UV disinfection system at Monitoring Locations FIL-001, UVS-001, and UVS-002 as follows:

Table E-10. Filtration System and UV Disinfection System Monitoring Requirements

Parameter	Units	Sample Type	Monitoring Location	Minimum Sampling Frequency
Flow	MGD	Meter	UVS-001	Continuous[1]
Turbidity	NTU	Meter	FIL-001	Continuous[1,2]
Number of UV banks in operation	Number	Observation	N/A	Continuous[1]
UV Transmittance	Percent (%)	Meter	UVS-001	Continuous[1]
UV Dose[3]	mJ/cm^2	Calculated	N/A	Continuous[1]
Total Coliform Organisms	MPN/100 mL	Grab	UVS-002	3/Week

[1] For continuous analyzers, the Discharger shall report documented routine meter maintenance activities including date, time of day, and duration, in which the analyzer(s) is not in operation. If analyzer(s) fail to provide continuous monitoring for more than two hours and influent and/or effluent from the disinfection process is not diverted for retreatment, the Discharger shall obtain and report hourly manual and/or grab sample results. The Discharger shall not decrease power settings or reduce the number of UV lamp banks in operation while the continuous analyzers are out of service and water is being disinfected.

[2] Report daily average and maximum turbidity.

[3] Report daily minimum hourly average UV dose and daily average UV dose. The minimum hourly average dose shall consist of lowest hourly average dose provided in any channel that had at least one bank of lamps operating during the hour interval. For channels that did not operate for the entire hour interval, the dose will be averaged based on the actual operation time.

D. Effluent and Receiving Water Characterization

If the Discharger is participating in the Delta RMP as described in Attachment E, Section VIII, the receiving water portion of this characterization monitoring need not be conducted by the Discharger. Instead, data from the Delta RMP may be utilized to characterize the receiving water in the permit renewal. The Discharger may request that the RMP perform sampling and laboratory analysis to address all or a portion of the monitoring under this characterization monitoring with the understanding that the Discharger will provide funding to the RMP sufficient to reimburse all of the costs of this additional effort. Alternatively, the Discharger may conduct any site-specific receiving water monitoring deemed appropriate by the Discharger and submit that monitoring data with this characterization monitoring. In general, monitoring data from samples collected in the immediate vicinity of the discharge will be given greater weight in permitting decisions than receiving water monitoring data collected at greater distances from the discharge point.

1. **Quarterly Monitoring (2018)**. Priority pollutant samples shall be collected quarterly from the effluent and upstream receiving water (Monitoring Locations EFF-001 and RSW-001) and analyzed for the constituents listed in Table E-11, below. Quarterly monitoring shall be conducted during the year 2018 (four consecutive samples, evenly distributed throughout the year) and the results of such monitoring be submitted to the Central Valley Water Board with the monthly self-monitoring reports. Each individual monitoring event shall provide representative sample results for the effluent and upstream receiving water.

2. **Concurrent Sampling**. Effluent and receiving water sampling shall be performed at approximately the same time, on the same date.

3. **Sample type**. All receiving water samples shall be taken as grab samples. Effluent samples shall be taken as described in Table E-11, below.

Table E-11. Effluent and Receiving Water Characterization Monitoring

Parameter	Units	Effluent Sample Type	Maximum Reporting Level[1]
2- Chloroethyl vinyl ether	µg/L	Grab	1
Acrolein	µg/L	Grab	2
Acrylonitrile	µg/L	Grab	2
Benzene	µg/L	Grab	0.5
Bromoform	µg/L	Grab	0.5
Carbon Tetrachloride	µg/L	Grab	0.5
Chlorobenzene	µg/L	Grab	0.5
Chloroethane	µg/L	Grab	0.5
Chloroform	µg/L	Grab	0.5
Chloromethane	µg/L	Grab	2
Dibromochloromethane	µg/L	Grab	0.5
Dichlorobromomethane	µg/L	Grab	0.5
Dichloromethane	µg/L	Grab	2
Ethylbenzene	µg/L	Grab	2
Hexachlorobenzene	µg/L	Grab	1
Hexachlorobutadiene	µg/L	Grab	1
Hexachloroethane	µg/L	Grab	1
Methyl bromide (Bromomethane)	µg/L	Grab	1
Naphthalene	µg/L	Grab	10
Parachlorometa cresol	µg/L	Grab	--
Tetrachloroethene	µg/L	Grab	0.5
Toluene	µg/L	Grab	2
trans-1,2-Dichloroethylene	µg/L	Grab	1
Trichloroethene	µg/L	Grab	2
Vinyl chloride	µg/L	Grab	0.5
Methyl-tert-butyl ether (MTBE)	µg/L	Grab	--
Trichlorofluoromethane	µg/L	Grab	--
1,1,1-Trichloroethane	µg/L	Grab	0.5
1,1,2-Trichloroethane	µg/L	Grab	0.5
1,1-dichloroethane	µg/L	Grab	0.5
1,1-dichloroethylene	µg/L	Grab	0.5
1,2-dichloropropane	µg/L	Grab	0.5
1,3-dichloropropylene	µg/L	Grab	0.5
1,1,2,2-tetrachloroethane	µg/L	Grab	0.5
1,1,2-Trichloro-1,2,2-Trifluoroethane	µg/L	Grab	--
1,2,4-trichlorobenzene	µg/L	Grab	1
1,2-dichoroethane	µg/L	Grab	0.5
1,2-dichlorobenzene	µg/L	Grab	0.5
1,3-dichlorobenzene	µg/L	Grab	0.5
1,4-dichlorobenzene	µg/L	Grab	0.5
Styrene	µg/L	Grab	--
Xylenes	µg/L	Grab	--
1,2-Benzanthracene	µg/L	Grab	5
1,2-Diphenylhydrazine	µg/L	Grab	1
2-Chlorophenol	µg/L	Grab	5
2,4-Dichlorophenol	µg/L	Grab	5

Parameter	Units	Effluent Sample Type	Maximum Reporting Level[1]
2,4-Dimethylphenol	µg/L	Grab	2
2,4-Dinitrophenol	µg/L	Grab	5
2,4-Dinitrotoluene	µg/L	Grab	5
2,4,6-Trichlorophenol	µg/L	Grab	10
2,6-Dinitrotoluene	µg/L	Grab	5
2-Nitrophenol	µg/L	Grab	10
2-Chloronaphthalene	µg/L	Grab	10
3,3'-Dichlorobenzidine	µg/L	Grab	5
3,4-Benzofluoranthene	µg/L	Grab	10
4-Chloro-3-methylphenol	µg/L	Grab	5
4,6-Dinitro-2-methylphenol	µg/L	Grab	10
4-Nitrophenol	µg/L	Grab	10
4-Bromophenyl phenyl ether	µg/L	Grab	10
4-Chlorophenyl phenyl ether	µg/L	Grab	5
Acenaphthene	µg/L	Grab	1
Acenaphthylene	µg/L	Grab	10
Anthracene	µg/L	Grab	10
Benzidine	µg/L	Grab	5
Benzo(a)pyrene (3,4-Benzopyrene)	µg/L	Grab	2
Benzo(g,h,i)perylene	µg/L	Grab	5
Benzo(k)fluoranthene	µg/L	Grab	2
Bis(2-chloroethoxy) methane	µg/L	Grab	5
Bis(2-chloroethyl) ether	µg/L	Grab	1
Bis(2-chloroisopropyl) ether	µg/L	Grab	10
Bis(2-ethylhexyl) phthalate[2,3]	µg/L	Grab	5
Butyl benzyl phthalate	µg/L	Grab	10
Chrysene	µg/L	Grab	5
Di-n-butylphthalate	µg/L	Grab	10
Di-n-octylphthalate	µg/L	Grab	10
Dibenzo(a,h)-anthracene	µg/L	Grab	0.1
Diethyl phthalate	µg/L	Grab	10
Dimethyl phthalate	µg/L	Grab	10
Fluoranthene	µg/L	Grab	10
Fluorene	µg/L	Grab	10
Hexachlorocyclopentadiene	µg/L	Grab	5
Indeno(1,2,3-c,d)pyrene	µg/L	Grab	0.05
Isophorone	µg/L	Grab	1
N-Nitrosodiphenylamine	µg/L	Grab	1
N-Nitrosodimethylamine	µg/L	Grab	5
N-Nitrosodi-n-propylamine	µg/L	Grab	5
Nitrobenzene	µg/L	Grab	10
Pentachlorophenol	µg/L	Grab	1
Phenanthrene	µg/L	Grab	5
Phenol	µg/L	Grab	1
Pyrene	µg/L	Grab	10
Aluminum	µg/L	24-hr Composite[4]	--
Antimony	µg/L	24-hr Composite[4]	5
Arsenic	µg/L	24-hr Composite[4]	10
Asbestos	µg/L	24-hr Composite[4]	--
Barium	µg/L	24-hr Composite[4]	--

Parameter	Units	Effluent Sample Type	Maximum Reporting Level[1]
Beryllium	µg/L	24-hr Composite[4]	2
Cadmium	µg/L	24-hr Composite[4]	0.5
Chromium (III)	µg/L	24-hr Composite[4]	50
Chromium (VI)	µg/L	24-hr Composite[4]	10
Copper	µg/L	24-hr Composite[4]	10
Cyanide	µg/L	24-hr Composite[4]	5
Fluoride	µg/L	24-hr Composite[4]	--
Iron	µg/L	24-hr Composite[4]	--
Lead	µg/L	24-hr Composite[4]	2
Mercury[2]	µg/L	Grab	0.5
Manganese	µg/L	24-hr Composite[4]	--
Molybdenum	µg/L	24-hr Composite[4]	--
Nickel	µg/L	24-hr Composite[4]	50
Selenium[2]	µg/L	24-hr Composite[4]	5
Silver	µg/L	24-hr Composite[4]	2
Thallium	µg/L	24-hr Composite[4]	1
Tributyltin	µg/L	24-hr Composite[4]	--
Zinc	µg/L	24-hr Composite[4]	20
4,4'-DDD	µg/L	24-hr Composite[4]	0.05
4,4'-DDE	µg/L	24-hr Composite[4]	0.05
4,4'-DDT	µg/L	24-hr Composite[4]	0.01
alpha-Endosulfan	µg/L	24-hr Composite[4]	0.02
alpha-Hexachlorocyclohexane (BHC)	µg/L	24-hr Composite[4]	0.01
Alachlor	µg/L	24-hr Composite[4]	--
Aldrin	µg/L	24-hr Composite[4]	0.005
beta-Endosulfan	µg/L	24-hr Composite[4]	0.01
beta-Hexachlorocyclohexane	µg/L	24-hr Composite[4]	0.005
Chlordane	µg/L	24-hr Composite[4]	0.1
delta-Hexachlorocyclohexane	µg/L	24-hr Composite[4]	0.005
Dieldrin	µg/L	24-hr Composite[4]	0.01
Endosulfan sulfate	µg/L	24-hr Composite[4]	0.01
Endrin	µg/L	24-hr Composite[4]	0.01
Endrin Aldehyde	µg/L	24-hr Composite[4]	0.01
Heptachlor	µg/L	24-hr Composite[4]	0.01
Heptachlor Epoxide	µg/L	24-hr Composite[4]	0.02
Lindane (gamma-Hexachlorocyclohexane)	µg/L	24-hr Composite[4]	0.5
PCB-1016	µg/L	24-hr Composite[4]	0.5
PCB-1221	µg/L	24-hr Composite[4]	0.5
PCB-1232	µg/L	24-hr Composite[4]	0.5
PCB-1242	µg/L	24-hr Composite[4]	0.5
PCB-1248	µg/L	24-hr Composite[4]	0.5
PCB-1254	µg/L	24-hr Composite[4]	0.5
PCB-1260	µg/L	24-hr Composite[4]	0.5
Toxaphene	µg/L	24-hr Composite[4]	--
Atrazine	µg/L	24-hr Composite[4]	--
Bentazon	µg/L	24-hr Composite[4]	--
Carbofuran	µg/L	24-hr Composite[4]	--
2,4-D	µg/L	24-hr Composite[4]	--
Dalapon	µg/L	24-hr Composite[4]	--

Parameter	Units	Effluent Sample Type	Maximum Reporting Level[1]
1,2-Dibromo-3-chloropropane (DBCP)	µg/L	24-hr Composite[4]	--
Di(2-ethylhexyl)adipate	µg/L	24-hr Composite[4]	--
Dinoseb	µg/L	24-hr Composite[4]	--
Diquat	µg/L	24-hr Composite[4]	--
Endothal	µg/L	24-hr Composite[4]	--
Ethylene Dibromide	µg/L	24-hr Composite[4]	--
Methoxychlor	µg/L	24-hr Composite[4]	--
Molinate (Ordram)	µg/L	24-hr Composite[4]	--
Oxamyl	µg/L	24-hr Composite[4]	--
Picloram	µg/L	24-hr Composite[4]	--
Simazine (Princep)	µg/L	24-hr Composite[4]	--
Thiobencarb	µg/L	24-hr Composite[4]	--
2,3,7,8-TCDD (Dioxin)	µg/L	24-hr Composite[4]	--
2,4,5-TP (Silvex)	µg/L	24-hr Composite[4]	--
Diazinon[2]	µg/L	24-hr Composite[4]	--
Chlorpyrifos[2]	µg/L	24-hr Composite[4]	--
Ammonia (as N)[2]	mg/L	24-hr Composite[4]	--
Boron[2]	µg/L	24-hr Composite[4]	--
Chloride	mg/L	24-hr Composite[4]	--
Flow[2]	MGD	Meter	--
Hardness (as $CaCO_3$)[2]	mg/L	Grab	--
Foaming Agents (MBAS)	µg/L	24-hr Composite[4]	--
Mercury, Methyl[2]	ng/L	Grab	--
Nitrate (as N)[2]	mg/L	24-hr Composite[4]	--
Nitrite (as N)	mg/L	24-hr Composite[4]	--
pH[2]	Std Units	Grab	--
Phosphorus, Total (as P)	mg/L	24-hr Composite[4]	--
Specific conductance (EC)[2]	µmhos/cm	24-hr Composite[4]	--
Sulfate	mg/L	24-hr Composite[4]	--
Sulfide (as S)	mg/L	24-hr Composite[4]	--
Sulfite (as SO_3)	mg/L	24-hr Composite[4]	--
Temperature[2]	^oC	Grab	--
Total Dissolved Solids (TDS)[2]	mg/L	24-hr Composite[4]	--

[1] The reporting levels required in this table for priority pollutant constituents are established based on Section 2.4.2 and Appendix 4 of the SIP.

[2] The Discharger is not required to conduct effluent monitoring for constituents that have already been sampled in a given quarter, as required in Table E-3, except for hardness, pH, and temperature, which shall be conducted concurrently with the effluent and receiving water sampling.

[3] In order to verify if bis (2-ethylhexyl) phthalate is truly present, the Discharger shall take steps to assure that sample containers, sampling apparatus, and analytical equipment are not sources of the detected contaminant.

[4] 24-hour flow proportional composite.

X. REPORTING REQUIREMENTS

A. General Monitoring and Reporting Requirements

1. The Discharger shall comply with all Standard Provisions (Attachment D) related to monitoring, reporting, and recordkeeping.

2. Upon written request of the Central Valley Water Board, the Discharger shall submit a summary monitoring report. The report shall contain both tabular and graphical summaries of the monitoring data obtained during the previous year(s).

3. **Compliance Time Schedules.** For compliance time schedules included in the Order, the Discharger shall submit to the Central Valley Water Board, on or before each compliance due date, the specified document or a written report detailing compliance or noncompliance with the specific date and task. If noncompliance is reported, the Discharger shall state the reasons for noncompliance and include an estimate of the date when the Discharger will be in compliance. The Discharger shall notify the Central Valley Water Board by letter when it returns to compliance with the compliance time schedule.

4. The Discharger shall report to the Central Valley Water Board any toxic chemical release data it reports to the State Emergency Response Commission within 15 days of reporting the data to the Commission pursuant to section 313 of the "*Emergency Planning and Community Right to Know Act*" of 1986.

B. Self-Monitoring Reports (SMRs)

1. The Discharger shall electronically submit SMRs using the State Water Board's California Integrated Water Quality System (CIWQS) Program Web site (http://www.waterboards.ca.gov/ciwqs/index.html). The CIWQS Web site will provide additional information for SMR submittal in the event there will be a planned service interruption for electronic submittal.

2. The Discharger shall report in the SMR the results for all monitoring specified in this MRP under sections III through IX. The Discharger shall submit monthly SMRs including the results of all required monitoring using U.S. EPA-approved test methods or other test methods specified in this Order. SMRs are to include all new monitoring results obtained since the last SMR was submitted. If the Discharger monitors any pollutant more frequently than required by this Order, the results of this monitoring shall be included in the calculations and reporting of the data submitted in the SMR.

3. Monitoring periods and reporting for all required monitoring shall be completed according to the following schedule:

Table E-12. Monitoring Periods and Reporting Schedule

Sampling Frequency	Monitoring Period Begins On…	Monitoring Period	SMR Due Date
Continuous	Permit effective date	All	Submit with monthly SMR
1/Day	Permit effective date	(Midnight through 11:59 PM) or any 24-hour period that reasonably represents a calendar day for purposes of sampling.	Submit with monthly SMR
3/Week	Permit effective date	Sunday through Saturday	Submit with monthly SMR
1/Week	Permit effective date	Sunday through Saturday	Submit with monthly SMR
1/Month	Permit effective date	1st day of calendar month through last day of calendar month	First day of second calendar month following month of sampling
1/Quarter	Permit effective date	1 January through 31 March 1 April through 30 June 1 July through 30 September 1 October through 31 December	1 May 1 August 1 November 1 February of following year
2/Year	Permit effective date	1 January through 30 June 1 July through 31 December	1 August 1 February of following year
1/Year	Permit effective date	1 January through 31 December	1 February of following year

4. **Reporting Protocols.** The Discharger shall report with each sample result the applicable Reporting Level (RL) and the current laboratory's Method Detection Limit (MDL), as determined by the procedure in 40 C.F.R. part 136.

   The Discharger shall report the results of analytical determinations for the presence of chemical constituents in a sample using the following reporting protocols:

   a. Sample results greater than or equal to the RL shall be reported as measured by the laboratory (i.e., the measured chemical concentration in the sample).

   b. Sample results less than the RL, but greater than or equal to the laboratory's MDL, shall be reported as "Detected, but Not Quantified," or DNQ. The estimated chemical concentration of the sample shall also be reported.

      For the purposes of data collection, the laboratory shall write the estimated chemical concentration next to DNQ. The laboratory may, if such information is available, include numerical estimates of the data quality for the reported result. Numerical estimates of data quality may be percent accuracy (± a percentage of the reported value), numerical ranges (low to high), or any other means considered appropriate by the laboratory.

   c. Sample results less than the laboratory's MDL shall be reported as "Not Detected," or ND.

   d. Dischargers are to instruct laboratories to establish calibration standards so that the Minimum Level (ML) value (or its equivalent if there is differential treatment of samples relative to calibration standards) is the lowest calibration standard. At no time is the Discharger to use analytical data derived from extrapolation beyond the lowest point of the calibration curve.

5. **Multiple Sample Data.** When determining compliance with an AMEL, AWEL, or MDEL for priority pollutants and more than one sample result is available, the Discharger shall compute the arithmetic mean unless the data set contains one or more reported determinations of "Detected, but Not Quantified" (DNQ) or "Not Detected" (ND). In those cases, the Discharger shall compute the median in place of the arithmetic mean in accordance with the following procedure:

   a. The data set shall be ranked from low to high, ranking the reported ND determinations lowest, DNQ determinations next, followed by quantified values (if any). The order of the individual ND or DNQ determinations is unimportant.

   b. The median value of the data set shall be determined. If the data set has an odd number of data points, then the median is the middle value. If the data set has an even number of data points, then the median is the average of the two values around the middle unless one or both of the points are ND or DNQ, in which case the median value shall be the lower of the two data points where DNQ is lower than a value and ND is lower than DNQ.

6. The Discharger shall submit SMRs in accordance with the following requirements:

   a. The Discharger shall arrange all reported data in a tabular format. The data shall be summarized to clearly illustrate whether the facility is operating in compliance with interim and/or final effluent limitations. The Discharger is not required to duplicate the submittal of data that is entered in a tabular format within CIWQS. When electronic submittal of data is required and CIWQS does not provide for entry into a tabular format within the system, the Discharger shall electronically submit the data in a tabular format as an attachment.

b. The Discharger shall attach a cover letter to the SMR. The information contained in the cover letter shall clearly identify violations of the WDR's; discuss corrective actions taken or planned; and the proposed time schedule for corrective actions. Identified violations must include a description of the requirement that was violated and a description of the violation.

7. The Discharger shall submit in the SMRs calculations and reports in accordance with the following requirements:

a. **Average Dry Weather Flow**. The Discharger shall calculate and report the average dry weather flow for the effluent. The average dry weather flow shall be calculated as specified in Section VII.C and reported in the December SMR.

b. **Calendar Year Annual Average Limitations**. For constituents with effluent limitations specified as "calendar year annual average" (boron and electrical conductivity) the Discharger shall report the calendar year annual average in the December SMR. The annual average shall be calculated as the average of the samples gathered for the calendar year.

c. **Mass Loading Limitations**. For BOD_5, TSS, ammonia, and selenium, the Discharger shall calculate and report the mass loading (lbs/day) in the SMRs. The mass loading shall be calculated as follows:

Mass Loading (lbs/day) = Flow (MGD) x Concentration (mg/L) x 8.34

When calculating daily mass loading, the daily average flow and constituent concentration shall be used. For weekly average mass loading, the weekly average flow and constituent concentration shall be used. For monthly average mass loading, the monthly average flow and constituent concentration shall be used.

d. **Removal Efficiency (BOD_5 and TSS).** The Discharger shall calculate and report the percent removal of BOD_5 and TSS in the SMRs. The percent removal shall be calculated as specified in Section VII.A. of the Limitations and Discharge Requirements.

e. **Total Coliform Organisms Effluent Limitations**. The Discharger shall calculate and report the 7-day median of total coliform organisms for the effluent. The 7-day median of total coliform organisms shall be calculated as specified in Section VII.D. of the Limitations and Discharge Requirements.

f. **Total Calendar Year Annual Mass Loading Mercury Effluent Limitation**. The Discharger shall calculate and report the total calendar year annual mercury mass loading for the effluent in the December SMR. The total calendar year annual mass loading shall be calculated as specified in Section VII.B of the Limitations and Discharge Requirements.

g. **Dissolved Oxygen Receiving Water Limitations**. The Discharger shall calculate and report monthly in the self-monitoring report: i) the dissolved oxygen concentration, ii) the percent of saturation in the main water mass, and iii) the 95th percentile dissolved oxygen concentration.

h. **Turbidity Receiving Water Limitations**. The Discharger shall calculate and report the turbidity increase in the receiving water applicable to the natural turbidity condition specified in Section V.A.17.a-e. of the Limitations and Discharge Requirements.

i. **Temperature Receiving Water Limitations**. The Discharger shall calculate and report the temperature increase in the receiving water based on the difference in temperature at Monitoring Locations RSW-001 and RSW-002.

j. **Chlorpyrifos and Diazinon Effluent Limitations**. The Discharger shall calculate and report the value of S_{AMEL} and S_{MDEL} for the effluent, using the equation in Effluent Limitations IV.A.1.j and consistent with the Compliance Determination Language in Section VII.H of the Limitations and Discharge Requirements. The Discharger shall also report the river stage height for the Sacramento River at the Fremont Weir (FRE) and whether the Yolo Bypass is flooded or not in the monthly SMRs for the months of December through May.

C. Discharge Monitoring Reports (DMRs)

1. At any time during the term of this permit, the State Water Board or Central Valley Water Board may notify the Discharger to electronically submit DMRs. Until such notification is given specifically for the electronic submittal of DMRs, the Discharger shall submit DMRs in accordance with the requirements described below.

2. DMRs must be signed and certified as required by the standard provisions (Attachment D). The Discharger shall submit the original DMR and one copy of the DMR to the address listed below:

STANDARD MAIL	FEDEX/UPS/ OTHER PRIVATE CARRIERS
State Water Resources Control Board Division of Water Quality c/o DMR Processing Center PO Box 100 Sacramento, CA 95812-1000	State Water Resources Control Board Division of Water Quality c/o DMR Processing Center 1001 I Street, 15th Floor Sacramento, CA 95814

3. All discharge monitoring results must be reported on the official U.S. EPA pre-printed DMR forms (EPA Form 3320-1) or on self-generated forms that follow the exact same format of EPA Form 3320-1.

D. Other Reports

1. **Special Study Reports and Progress Reports.** As specified in the Special Provisions contained in section VI of the Order, special study and progress reports shall be submitted in accordance with the following reporting requirements. At minimum, the progress reports shall include a discussion of the status of final compliance, whether the Discharger is on schedule to meet the final compliance date, and the remaining tasks to meet the final compliance date.

Table E-13. Reporting Requirements for Special Provisions Reports

Special Provision	Reporting Requirements
Central Valley Clean Water Association (CVCWA) Coordinated Methylmercury Control Study, Progress Report (Special Provisions VI.C.2.b and VI.C.7.a)	**20 October 2015**
CVCWA Coordinated Methylmercury Control Study, Final Report (Special Provisions VI.C.2.b and VI.C.7.a)	**20 October 2018**

Special Provision	Reporting Requirements
Groundwater Monitoring and Electrical Conductivity (EC) Evaluation, Report (Special Provision VI.C.2.c)	**1 February 2016**
Groundwater Monitoring and EC Evaluation, Progress Report (Special Provision VI.C.2.c)	**1 February 2017 and annually thereafter**
Pollution Prevention Plan (PPP) for Mercury and Compliance Schedule for Methylmercury, PPP (Special Provisions VI.C.3.a and VI.C.7.a)	**Within 9 months** of the effective date of this Order
PPP for Mercury and Compliance Schedule for Methylmercury, Progress Report (Special Provisions VI.C.3.a and VI.C.7.a)	**30 January,** annually
Salinity Evaluation and Minimization Plan, Updated Plan (Special Provision VI.C.3.c)	**Within 9 months** of the effective date of this Order
Salinity Evaluation and Minimization Plan, Progress Reports (Special Provision VI.C.3.c)	**30 January,** annually
Biosolids Use or Disposal Plan (Speicial Provision VI.C.5.b.v)	**Within 180 days** of the effective date of this Order
Compliance Schedule for Boron and Electrical Conductivity, Progress Reports (Special Provision VI.C.7.b)	**30 January,** annually

2. The Discharger shall report the results of any special studies, acute and chronic toxicity testing, TRE/TIE, PMP, and Pollution Prevention Plan required by Special Provisions – VI.C. The Discharger shall report the progress in satisfaction of compliance schedule dates specified in Special Provisions – VI.C.7. The Discharger shall submit reports with the first monthly SMR scheduled to be submitted on or immediately following the report due date.

3. Within 60 days of permit adoption, the Discharger shall submit a report outlining reporting levels (RLs), method detection limits, and analytical methods for approval. The Discharger shall comply with the monitoring and reporting requirements for CTR constituents as outlined in section 2.3 and 2.4 of the SIP. The maximum required reporting levels for priority pollutant constituents shall be based on the Minimum Levels (MLs) contained in Appendix 4 of the SIP, determined in accordance with Section 2.4.2 and Section 2.4.3 of the SIP. In accordance with Section 2.4.2 of the SIP, when there is more than one ML value for a given substance, the Central Valley Water Board shall include as RLs, in the permit, all ML values, and their associated analytical methods, listed in Appendix 4 that are below the calculated effluent limitation. The Discharger may select any one of those cited analytical methods for compliance determination. If no ML value is below the effluent limitation, then the Central Valley Water Board shall select as the RL, the lowest ML value, and its associated analytical method, listed in Appendix 4 for inclusion in the permit. Table E-11 (Attachment E) provides required maximum reporting levels in accordance with the SIP.

4. **Quarterly Dilution Reports.** The Discharger shall submit quarterly reports, in accordance with the “1/Quarter” SMR Due Date reporting requirements in Table E-12, evaluating the dilution provided by the receiving water. For each weekly receiving water

flow measurement made at Monitoring Location RSW-003 in accordance with section VII.A.2 of this MRP, the Discharger shall calculate the dilution ratio using 1) the observed effluent average daily flow at Monitoring Location EFF-001 on the day of the receiving water measurement and 2) the permitted effluent flow rate of 10.4 MGD. For periods when the Discharger is unable to measure receiving water flow (e.g., when the monitoring location is inaccessible), the Discharger shall provide an explanation in the report.

5. **Annual Operations Report.** By 30 January of each year, the Discharger shall submit a written report to the Executive Officer containing the following:

   a. The names, certificate grades, and general responsibilities of all persons employed at the Facility.

   b. The names and telephone numbers of persons to contact regarding the plant for emergency and routine situations.

   c. A statement certifying when the flow meter(s) and other monitoring instruments and devices were last calibrated, including identification of who performed the calibration.

   d. A statement certifying whether the current operation and maintenance manual, and contingency plan, reflect the wastewater treatment plant as currently constructed and operated, and the dates when these documents were last revised and last reviewed for adequacy.

   e. The Discharger may also be requested to submit an annual report to the Central Valley Water Board with both tabular and graphical summaries of the monitoring data obtained during the previous year. Any such request shall be made in writing. The report shall discuss the compliance record. If violations have occurred, the report shall also discuss the corrective actions taken and planned to bring the discharge into full compliance with the waste discharge requirements.

6. **Annual Pretreatment Reporting Requirements**. The Discharger shall submit annually a report to the Central Valley Water Board, with copies to U.S. EPA Region 9 and the State Water Board, describing the Discharger's pretreatment activities over the previous 12 months (1 January through 31 December). In the event that the Discharger is not in compliance with any conditions or requirements of this Order, including noncompliance with pretreatment audit/compliance inspection requirements, then the Discharger shall also include the reasons for noncompliance and state how and when the Discharger shall comply with such conditions and requirements.

   An annual report shall be submitted by **28 February** and include at least the following items:

   a. A summary of analytical results from representative, flow proportioned, 24-hour composite sampling of the POTW's influent and effluent for those pollutants U.S. EPA has identified under section 307(a) of the CWA which are known or suspected to be discharged by nondomestic users. This will consist of an annual full priority pollutant scan. The Discharger is not required to sample and analyze for asbestos. The Discharger shall submit the results of the annual priority pollutant scan electronically to the Central Valley Water Board using the State Water Board's CIWQS Program Website.

      Sludge shall be sampled during the same 24-hour period and analyzed for the same pollutants as the influent and effluent sampling and analysis. The sludge analyzed

shall be a composite sample of a minimum of 12 discrete samples taken at equal time intervals over the 24-hour period. Wastewater and sludge sampling and analysis shall be performed at least annually. The Discharger shall also provide any influent, effluent or sludge monitoring data for nonpriority pollutants which may be causing or contributing to Interference, Pass-Through or adversely impacting sludge quality. Sampling and analysis shall be performed in accordance with the techniques prescribed in 40 CFR Part 136 and amendments thereto.

b. A discussion of Upset, Interference, or Pass-Through incidents, if any, at the treatment plant, which the Discharger knows or suspects were caused by nondomestic users of the POTW. The discussion shall include the reasons why the incidents occurred, the corrective actions taken and, if known, the name and address of, the nondomestic user(s) responsible. The discussion shall also include a review of the applicable pollutant limitations to determine whether any additional limitations, or changes to existing requirements, may be necessary to prevent Pass-Through, Interference, or noncompliance with sludge disposal requirements.

c. The cumulative number of nondomestic users that the Discharger has notified regarding Baseline Monitoring Reports and the cumulative number of nondomestic user responses.

d. An updated list of the Discharger's significant industrial users (SIUs) including their names and addresses, or a list of deletions, additions and SIU name changes keyed to a previously submitted list. The Discharger shall provide a brief explanation for each change. The list shall identify the SIUs subject to federal categorical standards by specifying which set(s) of standards are applicable to each SIU. The list shall indicate which SIUs, or specific pollutants from each industry, are subject to local limitations. Local limitations that are more stringent than the federal categorical standards shall also be identified.

e. The Discharger shall characterize the compliance status through the year of record of each SIU by employing the following descriptions:

   i. complied with baseline monitoring report requirements (where applicable);

   ii. consistently achieved compliance;

   iii. inconsistently achieved compliance;

   iv. significantly violated applicable pretreatment requirements as defined by 40 CFR 403.8(f)(2)(vii);

   v. complied with schedule to achieve compliance (include the date final compliance is required);

   vi. did not achieve compliance and not on a compliance schedule; and

   vii. compliance status unknown.

f. A report describing the compliance status of each SIU characterized by the descriptions in items iii through vii above shall be submitted for each calendar quarter by the first day of the second month following the end of the quarter. The report shall identify the specific compliance status of each such SIU and shall also identify the compliance status of the POTW with regards to audit/pretreatment compliance inspection requirements. If none of the aforementioned conditions exist, at a minimum, a letter indicating that all industries are in compliance and no violations or changes to the pretreatment program have occurred during the quarter must be submitted. The information required in the fourth quarter report shall be

included as part of the annual report due every 28 February. This quarterly reporting requirement shall commence upon issuance of this Order.

g. A summary of the inspection and sampling activities conducted by the Discharger during the past year to gather information and data regarding the SIUs. The summary shall include:

   i. The names and addresses of the SIUs subjected to surveillance and an explanation of whether they were inspected, sampled, or both and the frequency of these activities at each user; and

   ii. The conclusions or results from the inspection or sampling of each industrial user.

h. The Discharger shall characterize the compliance status of each SIU by providing a list or table which includes the following information:

   i. Name of SIU;

   ii. Category, if subject to federal categorical standards;

   iii. The type of wastewater treatment or control processes in place;

   iv. The number of samples taken by the POTW during the year;

   v. The number of samples taken by the SIU during the year;

   vi. For an SIU subject to discharge requirements for total toxic organics, whether all required certifications were provided;

   vii. A list of the standards violated during the year. Identify whether the violations were for categorical standards or local limits.

   viii. Whether the facility is in significant noncompliance (SNC) as defined at 40 CFR 403.8(f)(2)(viii) at any time during the year; and

   ix. A summary of enforcement or other actions taken during the year to return the SIU to compliance. Describe the type of action (e.g., warning letters or notices of violation, administrative orders, civil actions, and criminal actions), final compliance date, and the amount of fines and penalties collected, if any. Describe any proposed actions for bringing the SIU into compliance;

   x. Restriction of flow to the POTW.

   xi. Disconnection from discharge to the POTW.

i. A brief description of any programs the POTW implements to reduce pollutants from nondomestic users that are not classified as SIUs;

j. A brief description of any significant changes in operating the pretreatment program which differ from the previous year including, but not limited to, changes concerning: the program's administrative structure, local limits, monitoring program or monitoring frequencies, legal authority, enforcement policy, funding levels, or staffing levels;

k. A summary of the annual pretreatment budget, including the cost of pretreatment program functions and equipment purchases; and

l. A summary of activities to involve and inform the public of the program including a copy of the newspaper notice, if any, required under 40 CFR 403.8(f)(2)(viii).

Pretreatment Program reports shall be submitted to the Central Valley Water Board and the:

State Water Resources Control Board
Division of Water Quality
1001 I Street or P.O. Box 100
Sacramento, CA 95812

and the

Regional Administrator
U.S. Environmental Protection Agency WTR-5
75 Hawthorne Street
San Francisco, CA 94105

ATTACHMENT F – FACT SHEET

Contents

I. Permit Information F-3
II. Facility Description F-4
A. Description of Wastewater and Biosolids Treatment and Controls F-4
B. Discharge Points and Receiving Waters F-4
C. Summary of Existing Requirements and Self-Monitoring Report (SMR) Data F-4
D. Compliance Summary F-5
E. Planned Changes F-7
III. Applicable Plans, Policies, and Regulations F-7
A. Legal Authorities F-8
B. California Environmental Quality Act (CEQA) F-8
C. State and Federal Laws, Regulations, Policies, and Plans F-8
D. Impaired Water Bodies on CWA 303(d) List F-10
E. Other Plans, Policies and Regulations F-11
IV. Rationale For Effluent Limitations and Discharge Specifications F-12
A. Discharge Prohibitions F-13
B. Technology-Based Effluent Limitations F-13
1. Scope and Authority F-13
2. Applicable Technology-Based Effluent Limitations F-14
C. Water Quality-Based Effluent Limitations (WQBELs) F-15
1. Scope and Authority F-15
2. Applicable Beneficial Uses and Water Quality Criteria and Objectives F-15
3. Determining the Need for WQBELs F-22
4. WQBEL Calculations F-37
5. Whole Effluent Toxicity (WET) F-39
D. Final Effluent Limitation Considerations F-42
1. Mass-based Effluent Limitations F-42
2. Averaging Periods for Effluent Limitations F-42
3. Satisfaction of Anti-Backsliding Requirements F-43
4. Antidegradation Policies F-45
5. Stringency of Requirements for Individual Pollutants F-46
E. Interim Effluent Limitations F-48
F. Land Discharge Specifications – Not Applicable F-50
G. Recycling Specifications – Not Applicable F-50
V. Rationale for Receiving Water Limitations F-50
A. Surface Water F-50
B. Groundwater F-52
VI. Rationale for Provisions F-53
A. Standard Provisions F-53
B. Special Provisions F-53
1. Reopener Provisions F-53
2. Special Studies and Additional Monitoring Requirements F-55
3. Best Management Practices and Pollution Prevention F-59
4. Construction, Operation, and Maintenance Specifications F-60
5. Special Provisions for Municipal Facilities (POTWs Only) F-62
6. Other Special Provisions F-62
7. Compliance Schedules F-62

VII. Rationale for Monitoring and Reporting Requirements F-65
A. Influent Monitoring F-65
B. Effluent Monitoring F-65
C. Whole Effluent Toxicity Testing Requirements F-67
D. Receiving Water Monitoring F-67
1. Surface Water F-67
2. Groundwater F-69
E. Other Monitoring Requirements F-69
VIII. Public Participation F-70
A. Notification of Interested Parties F-70
B. Written Comments F-70
C. Public Hearing F-70
D. Reconsideration of Waste Discharge Requirements F-71
E. Information and Copying F-71
F. Register of Interested Persons F-71
G. Additional Information F-71

Tables

Table F-1. Facility Information F-3
Table F-2. Historic Effluent Limitations and Monitoring Data F-5
Table F-3. Basin Plan Beneficial Uses F-9
Table F-4. 303 (d) List for Tule Canal F-11
Table F-5. Summary of Technology-based Effluent Limitations F-14
Table F-6. Copper ECA Evaluation F-20
Table F-7. Lead ECA Evaluation F-22
Table F-8. Summary of ECA Evaluations for CTR Hardness-dependent Metals F-22
Table F-9. Bis (2-Ethylhexyl) Phthalate Effluent Data Summary F-23
Table F-10. Total Mercury Effluent Data Summary F-30
Table F-11. Salinity Water Quality Criteria/Objectives F-34
Table F-12. Summary of Water Quality-Based Effluent Limitations F-38
Table F-13. Whole Effluent Chronic Toxicity Testing Results F-40
Table F-14. Chronic Toxicity Dilution Ratios F-41
Table F-15. Summary of Final Effluent Limitations F-47
Table F-16. Interim Effluent Limitation Calculation Summary F-50

ATTACHMENT F – FACT SHEET

As described in section II.B of this Order, the Central Valley Water Board incorporates this Fact Sheet as findings of the Central Valley Water Board supporting the issuance of this Order. This Fact Sheet includes the legal requirements and technical rationale that serve as the basis for the requirements of this Order.

This Order has been prepared under a standardized format to accommodate a broad range of discharge requirements for Dischargers in California. Only those sections or subsections of this Order that are specifically identified as “not applicable” have been determined not to apply to this Discharger. Sections or subsections of this Order not specifically identified as “not applicable” are fully applicable to this Discharger.

I. PERMIT INFORMATION

The following table summarizes administrative information related to the Facility.

Table F-1. Facility Information

WDID	5A570105001
Discharger	City of Woodland
Name of Facility	Water Pollution Control Facility
Facility Address	42929 County Road 24
	Woodland, CA 95776
	Yolo County
Facility Contact, Title and Phone	Mark Severeid, Laboratory and Pretreatment Manager, (530) 661-2065
Authorized Person to Sign and Submit Reports	Greg Meyer, Director of Public Works, (530) 661-5953
Mailing Address	655 North Pioneer Way, Woodland, CA 95776
Billing Address	Same as Mailing Address
Type of Facility	Publicly owned treatment works (POTW)
Major or Minor Facility	Major
Threat to Water Quality	1
Complexity	A
Pretreatment Program	Y
Recycling Requirements	Not Applicable
Facility Permitted Flow	10.4 million gallons per day (MGD), average dry weather flow
Facility Design Flow	10.4 MGD, average dry weather flow
Watershed	Lower Sacramento
Receiving Water	Tule Canal
Receiving Water Type	Inland Surface Water

A. The City of Woodland (hereinafter Discharger) is the owner and operator of the City of Woodland, Water Pollution Control Facility (hereinafter Facility), a POTW.

For the purposes of this Order, references to the “discharger” or “permittee” in applicable federal and state laws, regulations, plans, or policy are held to be equivalent to references to the Discharger herein.

B. The Facility discharges wastewater to Tule Canal, a water of the United States, within the Yolo Bypass. The Discharger was previously regulated by Order R5-2009-0010 and National

Pollutant Discharge Elimination System (NPDES) Permit No. CA0077950 adopted on 5 February 2009 and expired on 1 February 2014. Attachment B provides a map of the area around the Facility. Attachment C provides a flow schematic of the Facility.

Prior to making any change in the point of discharge, place of use, or purpose of use of treated wastewater that results in a decrease of flow in any portion of a watercourse, the Discharger must file a petition with the State Water Board, Division of Water Rights, and receive approval for such a change. The State Water Board retains the jurisdictional authority to enforce such requirements under Water Code section 1211.

C. The Discharger filed a report of waste discharge (ROWD) and submitted an application for reissuance of its WDR's and NPDES permit on 31 July 2013. The application was deemed complete on 20 February 2014. A site visit was conducted on 13 December 2013 to observe operations and collect additional data to develop permit limitations and requirements for waste discharge.

II. FACILITY DESCRIPTION

The Discharger provides sewerage service for the City of Woodland and serves a population of approximately 55,800. The design average dry weather flow capacity of the Facility is 10.4 MGD.

A. Description of Wastewater and Biosolids Treatment and Controls

The treatment system at the Facility consists of influent screw pumps, grit removal using two bar screens and two aerated grit chambers, secondary treatment consisting of four oxidation ditches and four secondary clarifiers, flocculation, four cloth filters, and ultraviolet light (UV) disinfection prior to discharge to the Tule Canal at Discharge Point 001. The Facility also includes the Erskine Pond, which is used for emergency flow equalization.

Historically, solids were stabilized in a set of 12 unlined, earthen ponds (South Ponds) located to the south of the Facility main site. Currently, only three of the South Ponds (ponds 9, 10, and 11) will be used for sludge management. The three sludge ponds will be actively loaded with solids and will be rotated (loaded, resting, or drying) every two years. The three sludge ponds will have a lime and cement treated bottom to reduce permeability and to facilitate cleaning operations by December 2015. After the stabilization is complete, the pond is drained and the solids are allowed to dry. Once dry, the solids are removed and sent to disposal at the Yolo County Central Landfill. The other nine ponds will not be used for sludge management however, they will be used to provide water storage and oxygenation to minimize odors.

The Discharger previously used nine North Ponds for biosolids treatment. During the term of Order R5-2009-0010, the Discharger dewatered and cleaned the North Ponds to construct a pad for a new regional water treatment plant. Therefore, these ponds are no longer in use and biosolids treatment occurs only in the South Ponds.

B. Discharge Points and Receiving Waters

1. The Facility is located in Section 2, T9N, R2E, MDB&M, as shown in Attachment B, a part of this Order.
2. Treated municipal wastewater is discharged at Discharge Point 001 to Tule Canal, a water of the United States, within the Yolo Bypass at a point latitude 38° 40' 51" N and longitude 121° 38' 38" W.

C. Summary of Existing Requirements and Self-Monitoring Report (SMR) Data

Effluent limitations contained in Order R5-2009-0010 for discharges from Discharge Point 001 (Monitoring Location EFF-001) and representative monitoring data from the term of Order R5-2009-0010 are as follows:

Table F-2. Historic Effluent Limitations and Monitoring Data

Parameter	Units	Effluent Limitation			Monitoring Data (January 2011 – December 2013)		
		Average Monthly	Average Weekly	Maximum Daily	Highest Average Monthly Discharge	Highest Average Weekly Discharge	Highest Daily Discharge
Biochemical Oxygen Demand (5-day @ 20°C)	mg/L	10	15	20	3.4	4.4	5.6
	lbs/day	867	1,301	1,735	100	132	213
	% Removal	85	--	--	98[1]	--	--
Total Suspended Solids	mg/L	10	15	20	5.2	9.0	10.4
	lbs/day	867	1,301	1,735	162	222	359
	% Removal	85	--	--	98[1]	--	--
pH	standard units	--	--	6.5 – 8.5	--	--	7.1 – 8.3
Ammonia Nitrogen, Total (as N)	mg/L	0.8	--	2.2	1.1[2]	--	5.2[2]
Selenium, Total Recoverable	µg/L	3.2	--	9.2	5.9	--	7.9
	lbs/day	0.28	--	0.80	0.51	--	0.69
Mercury, Total Recoverable	lbs/month	0.088[3]	--	--	0.014[4]	--	--
Acute Toxicity	% Survival	--	--	70[5]/90[6]	--	--	90[7]
Total Coliform Organisms	MPN/ 100 mL	--	2.2[8]	23[9]/240[10]	--	--	30
Average Daily Discharge Flow	MGD	--	--	10.4[11]	--	--	7.91

1 Represents the minimum monthly percent removal.
2 As described further in section IV.C.3.b.i.(d) of this Fact Sheet, the maximum observed average monthly and maximum daily ammonia values occurred during a plant upset in April 2012. Excluding the April 2012 results, the maximum observed average monthly and maximum daily ammonia values were 0.36 mg/L and 1.4 mg/L, respectively.
3 The total monthly mass discharge of total mercury shall not exceed 0.088 lbs/month.
4 Represents the maximum observed monthly mass discharged.
5 Minimum for one bioassay.
6 Median for any three consecutive bioassays.
7 Represents the minimum observed percent survival.
8 Applied as a 7-day median effluent limitation.
9 Not to be exceeded more than once in any 30-day period.
10 Applied as an instantaneous maximum effluent limitation.
11 The average daily discharge flow shall not exceed 10.4 MGD.

D. Compliance Summary

1. The Central Valley Water Board issued Administrative Civil Liability (ACL) Complaint No. R5-2011-0504 on 7 January 2011 which proposed to assess a civil liability of $3,000 against the Discharger for effluent violations of selenium and total coliform organisms that occurred during the period of 1 April 2008 to 30 September 2010. The Discharger paid the mandatory minimum penalty of $3,000.

2. The Central Valley Water Board issued ACL Complaint No. R5-2011-0568 on 6 May 2011 which proposed to assess a civil liability of $15,000 against the Discharger for effluent violations of total coliform organisms that occurred during the period of 1 October 2010 to 31 March 2011. The Discharger paid the mandatory minimum penalty of $15,000.

3. The Central Valley Water Board issued ACL Complaint No. R5-2013-0508 on 11 January 2013 which proposed to assess a civil liability of $45,000 against the Discharger for effluent violations of total coliform organisms, selenium, and ammonia that occurred during the period of 1 April 2011 to 30 June 2012. The Discharger paid the mandatory minimum penalty of $45,000.

4. A compliance inspection of the Facility was conducted on 2 September 2009. Major findings from the inspection include the following:

    a. The northern ponds and the western ponds showed improper weed control, in violation of Special Provision VI.C.4.b.iii.b of Order R5-2009-0010, which states, in part, "*Ponds shall be managed to prevent breeding of mosquitos. In particular…b) Weeds shall be minimized.*"

    b. Secondary clarifier number 1 showed signs of aging. The operators mentioned that the problems with the smaller clarifier were due to a recent plant upset.

    c. Laboratory chains of custody were missing the sampler initials and the preservation technique used.

    d. All ponds used for wastewater and sludge treatment are unlined and may be causing or contributing to groundwater contamination.

5. A compliance inspection of the Facility was conducted on 28 March 2011. Major findings from the inspection include the following:

    a. The Central Valley Water Board issued a Notice of Violation (NOV) letter regarding missing SMR data for the Fourth Quarter of 2010.

    b. The Discharger reported effluent total coliform organisms of 4 MPN/100 mL for 5 days between 17 January 2011 to 28 January 2011, which is above the 7-day median effluent limitation of 2.2 MPN/100 mL as required in section IV.A.1.f of Order No. R5-2009-0010. The Central Valley Water Board issued an NOV letter on 8 March 2011.

6. A compliance inspection of the Facility was conducted on 29 May 2012. No major findings were noted during the inspection.

7. A compliance inspection of the Facility was conducted on 21 February 2013. Major findings from the inspection include the following:

    a. Order R5-2009-0010, Attachment E, Section III.A.1 requires that influent flow be monitored. The primary on-site Facility representative stated that the Discharger has the capability to return flows from the UV disinfection channel back to the influent trunk line, upstream of the influent flow meters, during periods of power outage or because of effluent compliance issues. The primary on-site Facility representative stated that this practice is rare, and that the return flow is not typically subtracted from the influent flow rate, resulting in increased flow measurements. No specific occurrences of this practice were observed during the period of review (September 2012 through December 2012).

    b. Order R5-2009-0010, Attachment E, Table E-3, Footnote 1 requires that "*Pollutants shall be analyzed using the analytical methods described in 40 CFR Part 136.*" Oil

and grease samples are collected at NPDES monitoring locations for influent and effluent. The samples are not collected directly into a glass sample container, and are instead collected using plastic sampling container and transferred to the glass sample container. The results of these analyses are not reported to the Central Valley Water Board because the permit does not contain effluent limitations or monitoring and reporting requirements for oil and grease.

c. The Discharger did not record the type of sampling container used for each sample on the chain of custodies for samples analyzed by its contract laboratory. Laboratory personnel were unaware of this requirement.

8. A compliance inspection of the Facility was conducted on 8 November 2013. Major findings from the inspection include the following:

   a. Groundwater monitoring well MW-06 contained a pipe casing and pipe cap. However, the well casing did not contain a lock. The Facility representative stated that locks would be purchased for all of the groundwater monitoring well casings.

9. A pretreatment compliance inspection of the Facility was conducted on 13 January 2010. The inspection report contained seven required and five recommended actions to improve the Discharger's Industrial Pretreatment Program.

10. A pretreatment compliance inspection of the Facility was conducted on 25 January 2012. The inspection report contained seven required and seven recommended actions to improve the Discharger's Industrial Pretreatment Program.

11. A pretreatment compliance audit of the Facility was conducted on 26/27 February 2014. The audit report contained 10 required and seven recommended actions to improve the Discharger's Industrial Pretreatment Program.

E. Planned Changes

The Discharger has successfully pilot tested operation of the existing cloth filtration system using 5 micron filter media rather than the current 10 micron media. The 10 micron media will eventually be changed out to the 5 micron media on all filters.

The Discharger has obtained a State Revolving Fund Loan (CWSRF #C-06-8002-110,120,130) to complete various upgrades to the Facility. The upgrades include: (1) converting the existing oxidation ditches to nitrifying and denitrifying bioreactors. This upgrade involves construction of partitions to separate the oxidation ditches into anoxic and aerated zones and installing submersible mixers and fine bubble diffusers to replace older brush aerators, (2) constructing a magnesium hydroxide feed system to buffer the wastewater after the Discharger converts its water supply to surface water, and (3) various upgrades to the sludge pond system. Facility upgrades (1) and (2) were awarded to a contractor in July 2014 and will be completed by September 2016. This project will reduce aeration power consumption by an estimated 40% and will reduce effluent nitrogen levels.

Improvements to the sludge pond system will include piping and valve modifications to allow ponds to be isolated for sludge stabilization, drying, and removal. The improvements also include treating the bottoms of Pond 9 and Pond 10 with combination of lime and cement. The Discharger has previously cement-treated Pond 11 to reduce permeability and allow sludge removal operations. The bottom of Pond 11 was completed in 2012. The bottoms of Pond 9 and Pond 10 will be cement treated by December 1, 2015.

III. APPLICABLE PLANS, POLICIES, AND REGULATIONS

The requirements contained in this Order are based on the requirements and authorities described in this section.

A. Legal Authorities

This Order serves as WDR's pursuant to article 4, chapter 4, division 7 of the California Water Code (commencing with section 13260). This Order is also issued pursuant to section 402 of the federal Clean Water Act (CWA) and implementing regulations adopted by the U.S. EPA and chapter 5.5, division 7 of the Water Code (commencing with section 13370). It shall serve as an NPDES permit for point source discharges from this Facility to surface waters.

B. California Environmental Quality Act (CEQA)

Under Water Code section 13389, this action to adopt an NPDES permit is exempt from the provisions of Chapter 3 of CEQA, (commencing with section 21100) of Division 13 of the Public Resources Code.

C. State and Federal Laws, Regulations, Policies, and Plans

1. **Water Quality Control Plans.** Requirements of this Order specifically implement the applicable Water Quality Control Plans.

   a. **Basin Plan.** The Central Valley Water Board adopted a Water Quality Control Plan, Fourth Edition (Revised October 2011), for the Sacramento and San Joaquin River Basins (hereinafter Basin Plan) that designates beneficial uses, establishes water quality objectives, and contains implementation programs and policies to achieve those objectives for all waters addressed through the plan. Requirements in this Order implement the Basin Plan.

   The Basin Plan in Table II-1, Section II, identifies present and potential uses for the Yolo Bypass, which includes Tule Canal. Therefore, the beneficial uses for the Yolo Bypass listed in Table II-1 of the Basin Plan apply to Tule Canal.

   The Basin Plan implements State Water Board Resolution No. 88-63, which established state policy that all waters, with certain exceptions, should be considered suitable or potentially suitable for municipal or domestic supply. Resolution No. 88-63 also states, "*Any body of water which has current specific designation previously assigned to it by a Regional Board in Water Quality Control Plans may retain that designation at the Regional Board's discretion*." The Basin Plan does not specifically assign municipal and domestic supply as a beneficial use to the Yolo Bypass. Therefore, this Order does not apply the municipal and domestic water supply beneficial use to discharges to Tule Canal. Thus, beneficial uses applicable to Tule Canal are as follows:

Table F-3. Basin Plan Beneficial Uses

Discharge Point	Receiving Water Name	Beneficial Use(s)
001	Tule Canal	Existing: Agricultural supply including stock watering (AGR); water contact recreation (REC-1); non-contact water recreation (REC-2); warm freshwater habitat (WARM); warm and cold migration of aquatic organisms (MIGR); warm spawning, reproduction, and/or early development (SPWN); and wildlife habitat (WILD). Potential: Cold freshwater habitat (COLD)
--	Groundwater	Existing: Municipal and domestic supply (MUN); agricultural supply (AGR); industrial service supply (IND): and industrial process supply (PRO).

2. **National Toxics Rule (NTR) and California Toxics Rule (CTR).** U.S. EPA adopted the NTR on 22 December 1992, and later amended it on 4 May 1995 and 9 November 1999. About forty criteria in the NTR applied in California. On 18 May 2000, U.S. EPA adopted the CTR. The CTR promulgated new toxics criteria for California and, in addition, incorporated the previously adopted NTR criteria that were applicable in the state. The CTR was amended on 13 February 2001. These rules contain federal water quality criteria for priority pollutants.

3. **State Implementation Policy.** On 2 March 2000, the State Water Board adopted the Policy for Implementation of Toxics Standards for Inland Surface Waters, Enclosed Bays, and Estuaries of California (State Implementation Policy or SIP). The SIP became effective on 28 April 2000, with respect to the priority pollutant criteria promulgated for California by the U.S. EPA through the NTR and to the priority pollutant objectives established by the Central Valley Water Board in the Basin Plan. The SIP became effective on 18 May 2000, with respect to the priority pollutant criteria promulgated by the U.S. EPA through the CTR. The State Water Board adopted amendments to the SIP on 24 February 2005, that became effective on 13 July 2005. The SIP establishes implementation provisions for priority pollutant criteria and objectives and provisions for chronic toxicity control. Requirements of this Order implement the SIP.

4. **Antidegradation Policy.** Federal regulation 40 C.F.R. section 131.12 requires that the state water quality standards include an antidegradation policy consistent with the federal policy. The State Water Board established California's antidegradation policy in State Water Board Resolution 68-16 ("*Statement of Policy with Respect to Maintaining High Quality of Waters in California*"). Resolution 68-16 is deemed to incorporate the federal antidegradation policy where the federal policy applies under federal law. Resolution 68-16 requires that existing water quality be maintained unless degradation is justified based on specific findings. The Central Valley Water Board's Basin Plan implements, and incorporates by reference, both the State and federal antidegradation policies. The permitted discharge must be consistent with the antidegradation provision of 40 C.F.R. section 131.12 and State Water Board Resolution 68-16.

5. **Anti-Backsliding Requirements.** Sections 402(o) and 303(d)(4) of the CWA and federal regulations at 40 C.F.R. section 122.44(l) restrict backsliding in NPDES permits. These anti-backsliding provisions require that effluent limitations in a reissued permit must be

as stringent as those in the previous permit, with some exceptions in which limitations may be relaxed.

6. **Domestic Water Quality.** In compliance with Water Code section 106.3, it is the policy of the State of California that every human being has the right to safe, clean, affordable, and accessible water adequate for human consumption, cooking, and sanitary purposes. This Order promotes that policy by requiring discharges to meet maximum contaminant levels designed to protect human health and ensure that water is safe for domestic use.

7. **Endangered Species Act Requirements.** This Order does not authorize any act that results in the taking of a threatened or endangered species or any act that is now prohibited, or becomes prohibited in the future, under either the California Endangered Species Act (Fish and Game Code, §§ 2050 to 2097) or the Federal Endangered Species Act (16 U.S.C.A. §§ 1531 to 1544). This Order requires compliance with effluent limits, receiving water limits, and other requirements to protect the beneficial uses of waters of the state. The Discharger is responsible for meeting all requirements of the applicable Endangered Species Act.

8. **Emergency Planning and Community Right to Know Act.** Section 13263.6(a) of the Water Code, requires that *"the Regional Water Board shall prescribe effluent limitations as part of the waste discharge requirements of a POTW for all substances that the most recent toxic chemical release data reported to the state emergency response commission pursuant to Section 313 of the Emergency Planning and Community Right to Know Act of 1986 (42 U.S.C. Sec. 11023) (EPCRA) indicate as discharged into the POTW, for which the State Water Board or the Regional Water Board has established numeric water quality objectives, and has determined that the discharge is or may be discharged at a level which will cause, have the reasonable potential to cause, or contribute to, an excursion above any numeric water quality objective"*.

   The most recent toxic chemical data report does not indicate any reportable off-site releases or discharges to the collection system for this Facility. Therefore, a reasonable potential analysis based on information from EPCRA cannot be conducted. Based on information from EPCRA, there is no reasonable potential to cause or contribute to an excursion above any numeric water quality objectives included within the Basin Plan or in any State Water Board plan, so no effluent limitations are included in this permit pursuant to Water Code section 13263.6(a).

   However, as detailed elsewhere in this Order, available effluent data indicate that there are constituents present in the effluent that have a reasonable potential to cause or contribute to exceedances of water quality standards and require inclusion of effluent limitations based on federal and state laws and regulations.

9. **Storm Water Requirements.** U.S. EPA promulgated federal regulations for storm water on 16 November 1990 in 40 CFR Parts 122, 123, and 124. The NPDES Industrial Storm Water Program regulates storm water discharges from wastewater treatment facilities. Wastewater treatment plants are applicable industries under the storm water program and are obligated to comply with the federal regulations. The Discharger has submitted a Notice of Intent (NOI) and been approved for coverage under the State Water Board's Industrial Storm Water General Order. Therefore, this Order does not regulate storm water.

D. Impaired Water Bodies on CWA 303(d) List

1. Under section 303(d) of the 1972 CWA, states, territories and authorized tribes are required to develop lists of water quality limited segments. The waters on these lists do not meet water quality standards, even after point sources of pollution have installed the

minimum required levels of pollution control technology. On 11 October 2011 U.S. EPA gave final approval to California's 2008-2010 section 303(d) List of Water Quality Limited Segments. The Basin Plan references this list of Water Quality Limited Segments (WQLSs), which are defined as "…*those sections of lakes, streams, rivers or other fresh water bodies where water quality does not meet (or is not expected to meet) water quality standards even after the application of appropriate limitations for point sources* (40 CFR Part 130, et seq.)." The Basin Plan also states, "*Additional treatment beyond minimum federal standards will be imposed on dischargers to [WQLSs]. Dischargers will be assigned or allocated a maximum allowable load of critical pollutants so that water quality objectives can be met in the segment*." The listing for the Tule Canal includes: boron, *E. coli*, fecal coliform organisms, and salinity.

2. **Total Maximum Daily Loads (TMDLs).** U.S. EPA requires the Central Valley Water Board to develop TMDLs for each 303(d) listed pollutant and water body combination. Table F-4, below, identifies the 303(d) listings and the status of each TMDL.

Table F-4. 303 (d) List for Tule Canal

Pollutant	Potential Sources	TMDL Completion[1]
Boron	Agriculture, Natural Sources	(2021)
Diazinon and Chlorpyrifos	Agriculture, Urban Runoff	10 October 2007
Escherichia coli	Agriculture, Nonpoint Source, Source Unknown	(2021)
Fecal Coliform	Agriculture, Source Unknown	(2021)
Mercury	Resource Extraction	20 October 2011
Salinity	Agriculture	(2021)

[1] Dates in parenthesis are proposed TMDL completion dates.

3. The 303(d) listings and TMDLs have been considered in the development of the Order. A pollutant-by-pollutant evaluation of each pollutant of concern is described in section IV.C.3 of this Fact Sheet.

E. Other Plans, Policies and Regulations

1. **Title 27.** The discharge authorized herein and the treatment and storage facilities associated with the discharge of treated municipal wastewater, except for discharges of residual sludge and solid waste, are exempt from the requirements of Title 27, California Code of Regulations (CCR), section 20005 *et seq* (hereafter Title 27). The exemption, pursuant to Title 27 CCR section 20090(a), is based on the following:

   a. The waste consists primarily of domestic sewage and treated effluent;

   b. The waste discharge requirements are consistent with water quality objectives; and

   c. The treatment and storage facilities described herein are associated with a municipal wastewater treatment plant.

2. **Discharge Monitoring Report-Quality Assurance (DMR-QA) Study Program.** Under the authority of section 308 of the CWA (33 U.S.C. § 1318), U.S. EPA requires major and selected minor permittees under the NPDES Program to participate in the annual DMR-QA Study Program. The DMR-QA Study evaluates the analytical ability of laboratories that routinely perform or support self-monitoring analyses required by NPDES permits. There are two options to satisfy the requirements of the DMR-QA Study Program: (1) The Discharger can obtain and analyze a DMR-QA sample as part of the DMR-QA Study; or (2) Per the waiver issued by U.S.EPA to the State Water Resources Control Board (State Water Board), the Discharger can submit the results of the most recent

Water Pollution Performance Evaluation Study from their own laboratories or their contract laboratories. A Water Pollution Performance Evaluation Study is similar to the DMR-QA Study. Thus, it also evaluates a laboratory's ability to analyze wastewater samples to produce quality data that ensure the integrity of the NPDES Program. The Discharger shall submit annually the results of the DMR-QA Study or the results of the most recent Water Pollution Performance Evaluation Study to the State Water Board. The State Water Board's Quality Assurance Program Officer will send the DMR-QA Study results or the results of the most recent Water Pollution Performance Evaluation Study to U.S. EPA's DMR-QA Coordinator and Quality Assurance Manager.

IV. RATIONALE FOR EFFLUENT LIMITATIONS AND DISCHARGE SPECIFICATIONS

Effluent limitations and toxic and pretreatment effluent standards established pursuant to sections 301 (Effluent Limitations), 302 (Water Quality Related Effluent Limitations), 304 (Information and Guidelines), and 307 (Toxic and Pretreatment Effluent Standards) of the CWA and amendments thereto are applicable to the discharge.

The CWA mandates the implementation of effluent limitations that are as stringent as necessary to meet water quality standards established pursuant to state or federal law [33 U.S.C., §1311(b)(1)(C); 40 CFR 122.44(d)(1)]. NPDES permits must incorporate discharge limits necessary to ensure that water quality standards are met. This requirement applies to narrative criteria as well as to criteria specifying maximum amounts of particular pollutants. Pursuant to federal regulations, 40 CFR 122.44(d)(1)(i), NPDES permits must contain limits that control all pollutants that "*are or may be discharged at a level which will cause, have the reasonable potential to cause, or contribute to an excursion above any state water quality standard, including state narrative criteria for water quality*." Federal regulations, 40 CFR 122.44(d)(1)(vi), further provide that *"[w]here a state has not established a water quality criterion for a specific chemical pollutant that is present in an effluent at a concentration that causes, has the reasonable potential to cause, or contributes to an excursion above a narrative criterion within an applicable State water quality standard, the permitting authority must establish effluent limits*."

The CWA requires point source dischargers to control the amount of conventional, non-conventional, and toxic pollutants that are discharged into the waters of the United States. The control of pollutants discharged is established through effluent limitations and other requirements in NPDES permits. There are two principal bases for effluent limitations in the Code of Federal Regulations: 40 CFR 122.44(a) requires that permits include applicable technology-based limitations and standards; and 40 CFR 122.44(d) requires that permits include WQBELs to attain and maintain applicable numeric and narrative water quality criteria to protect the beneficial uses of the receiving water where numeric water quality objectives have not been established. The Basin Plan at page IV-17.00, contains an implementation policy, "*Policy for Application of Water Quality Objectives*" that specifies that the Central Valley Water Board "*will, on a case-by-case basis, adopt numerical limitations in orders which will implement the narrative objectives*." This Policy complies with 40 CFR 122.44(d)(1). With respect to narrative objectives, the Central Valley Water Board must establish effluent limitations using one or more of three specified sources, including: (1) U.S. EPA's published water quality criteria, (2) a proposed state criterion (i.e., water quality objective) or an explicit state policy interpreting its narrative water quality criteria (i.e., the Central Valley Water Board's "*Policy for Application of Water Quality Objectives*")(40 CFR 122.44(d)(1)(vi)(A), (B) or (C)), or (3) an indicator parameter.

The Basin Plan includes numeric site-specific water quality objectives and narrative objectives for toxicity, chemical constituents, discoloration, radionuclides, and tastes and odors. The narrative toxicity objective states: "*All waters shall be maintained free of toxic substances in concentrations that produce detrimental physiological responses in human, plant, animal, or aquatic life*." (Basin Plan at III-8.00) The Basin Plan states that material and relevant information, including numeric

criteria, and recommendations from other agencies and scientific literature will be utilized in evaluating compliance with the narrative toxicity objective. The narrative chemical constituents objective states that waters shall not contain chemical constituents in concentrations that adversely affect beneficial uses. At minimum, *"…water designated for use as domestic or municipal supply (MUN) shall not contain concentrations of chemical constituents in excess of the maximum contaminant levels (MCLs)*" in Title 22 of CCR. The Basin Plan further states that, to protect all beneficial uses, the Central Valley Water Board may apply limits more stringent than MCLs. The narrative tastes and odors objective states: "*Water shall not contain taste- or odor-producing substances in concentrations that impart undesirable tastes or odors to domestic or municipal water supplies or to fish flesh or other edible products of aquatic origin, or that cause nuisance, or otherwise adversely affect beneficial uses*."

A. Discharge Prohibitions

1. **Prohibition III.A (No discharge or application of waste other than that described in this Order).** This prohibition is based on Water Code section 13260 that requires filing of a ROWD before discharges can occur. The Discharger submitted a ROWD for the discharges described in this Order; therefore, discharges not described in this Order are prohibited.
2. **Prohibition III.B (No bypasses or overflow of untreated wastewater, except under the conditions at CFR Part 122.41(m)(4)).** As stated in section I.G of Attachment D, Standard Provisions, this Order prohibits bypass from any portion of the treatment facility. Federal regulations, 40 CFR 122.41(m), define "bypass" as the intentional diversion of waste streams from any portion of a treatment facility. This section of the federal regulations, 40 CFR 122.41(m)(4), prohibits bypass unless it is unavoidable to prevent loss of life, personal injury, or severe property damage. In considering the Regional Water Board's prohibition of bypasses, the State Water Board adopted a precedential decision, Order No. WQO 2002-0015, which cites the federal regulations, 40 CFR 122.41(m), as allowing bypass only for essential maintenance to assure efficient operation.
3. **Prohibition III.C (No controllable condition shall create a nuisance).** This prohibition is based on Water Code section 13050 that requires water quality objectives established for the prevention of nuisance within a specific area. The Basin Plan prohibits conditions that create a nuisance.
4. **Prohibition III.D (No inclusion of pollutant free wastewater shall cause improper operation of the Facility's systems).** This prohibition is based on 40 CFR Part 122.41 et seq. that requires the proper design and operation of treatment facilities.

B. Technology-Based Effluent Limitations

1. Scope and Authority

Section 301(b) of the CWA and implementing U.S. EPA permit regulations at 40 C.F.R. section 122.44 require that permits include conditions meeting applicable technology-based requirements at a minimum, and any more stringent effluent limitations necessary to meet applicable water quality standards. The discharge authorized by this Order must meet minimum federal technology-based requirements based on Secondary Treatment Standards at 40 C.F.R. part 133.

Regulations promulgated in 40 C.F.R. section 125.3(a)(1) require technology-based effluent limitations for municipal Dischargers to be placed in NPDES permits based on Secondary Treatment Standards or Equivalent to Secondary Treatment Standards.

The Federal Water Pollution Control Act Amendments of 1972 (PL 92-500) established the minimum performance requirements for POTWs [defined in section 304(d)(1)]. Section 301(b)(1)(B) of that Act requires that such treatment works must, as a minimum, meet effluent limitations based on secondary treatment as defined by the U.S. EPA Administrator.

Based on this statutory requirement, U.S. EPA developed secondary treatment regulations, which are specified in 40 C.F.R. part 133. These technology-based regulations apply to all municipal wastewater treatment plants and identify the minimum level of effluent quality attainable by secondary treatment in terms of biochemical oxygen demand (BOD_5), total suspended solids (TSS), and pH.

2. Applicable Technology-Based Effluent Limitations

a. **BOD_5 and TSS.** Federal regulations, 40 CFR Part 133, establish the minimum weekly and monthly average level of effluent quality attainable by secondary treatment for BOD_5 and TSS. This Order requires WQBELs that are equal to or more stringent than the secondary technology-based treatment described in 40 CFR Part 133 and are necessary to protect the beneficial uses of the receiving stream. (See section IV.C.3.b of this Attachment for the discussion on pathogens.) In addition, 40 CFR 133.102, in describing the minimum level of effluent quality attainable by secondary treatment, states that the 30-day average percent removal shall not be less than 85 percent. This Order contains a limitation requiring an average of 85 percent removal of BOD_5 and TSS over each calendar month.

b. **Flow.** The Facility was designed to provide a tertiary level of treatment for up to a design average dry weather flow of 10.4 MGD. Therefore, this Order contains an average dry weather discharge flow effluent limit of 10.4 MGD.

c. **pH.** The secondary treatment regulations at 40 CFR Part 133 also require that pH be maintained between 6.0 and 9.0 standard units.

Summary of Technology-based Effluent Limitations
Discharge Point 001

Table F-5. Summary of Technology-based Effluent Limitations

Parameter	Units	Effluent Limitations				
		Average Monthly	Average Weekly	Maximum Daily	Instantaneous Minimum	Instantaneous Maximum
Flow	MGD	--	--	10.4[1]	--	--
Conventional Pollutants						
Biochemical Oxygen Demand (5-Day @ 20°C)[2]	mg/L	30	45	--	--	--
	lbs/day[3]	2,600	3,900	--	--	--
	% Removal	85	--	--	--	--
pH[2]	standard units	--	--	--	6.0	9.0
Total Suspended Solids[2]	mg/L	30	45	--	--	--
	lbs/day[3]	2,600	3,900	--	--	--
	% Removal	85	--	--	--	--

1 The average dry weather flow shall not exceed 10.4 MGD.
2 More stringent WQBELs are applicable to the discharge and are included in this Order, as described further in section IV.C.3.b of this Fact Sheet.
3 Based upon an average dry weather flow of 10.4 MGD.

C. Water Quality-Based Effluent Limitations (WQBELs)

1. Scope and Authority

CWA Section 301(b) and 40 C.F.R. section 122.44(d) require that permits include limitations more stringent than applicable federal technology-based requirements where necessary to achieve applicable water quality standards. This Order contains requirements, expressed as a technology equivalence requirement, more stringent than secondary treatment requirements that are necessary to meet applicable water quality standards. The rationale for these requirements, which consist of tertiary treatment or equivalent requirements or other provisions, is discussed in section IV.C.3.b in the Fact Sheet.

Section 122.44(d)(1)(i) of 40 C.F.R. requires that permits include effluent limitations for all pollutants that are or may be discharged at levels that have the reasonable potential to cause or contribute to an exceedance of a water quality standard, including numeric and narrative objectives within a standard. Where reasonable potential has been established for a pollutant, but there is no numeric criterion or objective for the pollutant, WQBELs must be established using: (1) U.S. EPA criteria guidance under CWA section 304(a), supplemented where necessary by other relevant information; (2) an indicator parameter for the pollutant of concern; or (3) a calculated numeric water quality criterion, such as a proposed state criterion or policy interpreting the state's narrative criterion, supplemented with other relevant information, as provided in section 122.44(d)(1)(vi).

The process for determining reasonable potential and calculating WQBELs when necessary is intended to protect the designated uses of the receiving water as specified in the Basin Plan, and achieve applicable water quality objectives and criteria that are contained in other state plans and policies, or any applicable water quality criteria contained in the CTR and NTR.

2. Applicable Beneficial Uses and Water Quality Criteria and Objectives

The Basin Plan designates beneficial uses, establishes water quality objectives, and contains implementation programs and policies to achieve those objectives for all waters addressed through the plan. In addition, the Basin Plan implements State Water Board Resolution No. 88-63, which established state policy that all waters, with certain exceptions, should be considered suitable or potentially suitable for municipal or domestic supply.

The Basin Plan on page II-1.00 states: "*Protection and enhancement of existing and potential beneficial uses are primary goals of water quality planning…*" and with respect to disposal of wastewaters states that "...*disposal of wastewaters is [not] a prohibited use of waters of the State; it is merely a use which cannot be satisfied to the detriment of beneficial uses.*"

The federal CWA section 101(a)(2), states: "*it is the national goal that wherever attainable, an interim goal of water quality which provides for the protection and propagation of fish, shellfish, and wildlife, and for recreation in and on the water be achieved by July 1, 1983*." Federal Regulations, developed to implement the requirements of the CWA, create a rebuttable presumption that all waters be designated as fishable and swimmable. Federal Regulations, 40 CFR sections 131.2 and 131.10, require that all waters of the State regulated to protect the beneficial uses of public water supply, protection and propagation of fish, shell fish and wildlife, recreation in and on the water, agricultural, industrial and other purposes including navigation. Section 131.3(e), 40 CFR, defines existing beneficial uses as those uses actually attained after 28 November 1975, whether or not they are included in the water quality standards.

Federal Regulation, 40 CFR section 131.10 requires that uses be obtained by implementing effluent limitations, requires that all downstream uses be protected and states that in no case shall a state adopt waste transport or waste assimilation as a beneficial use for any waters of the United States.

a. **Receiving Water and Beneficial Uses.** Refer to III.C.1. above for a complete description of the receiving water and beneficial uses.

b. **Effluent and Ambient Background Data.** The reasonable potential analysis (RPA), as described in section IV.C.3 of this Fact Sheet, was based on data from January 2011 through December 2013. However, the previous Order R5-2009-0010 did not require the Discharger to monitor the receiving water for most constituents, including priority pollutants. Therefore, the RPA was conducted without effluent and ambient background data. This Order includes receiving water monitoring requirements in section VIII.A.1 of the Monitoring and Reporting Program, Attachment E of this Order.

c. **Assimilative Capacity/Mixing Zone.** Tule Canal is an ephemeral stream. The State Water Board, in a precedential decision in Order WQO 2002-0015, states that the use of the harmonic mean to determine flow rates is inappropriate for ephemeral streams where there is no consistent background dilution. The impact of considering a receiving stream to be ephemeral is that all limitations are “end of pipe” without any benefit of dilution. Based on the available information, the worst-case dilution is assumed to be zero to provide protection for the receiving water beneficial uses.

d. **Conversion Factors.** The CTR contains aquatic life criteria for arsenic, cadmium, chromium III, chromium VI, copper, lead, nickel, silver, and zinc which are presented in dissolved concentrations. U.S. EPA recommends conversion factors to translate dissolved concentrations to total concentrations. The default U.S. EPA conversion factors contained in Appendix 3 of the SIP were used to convert the applicable dissolved criteria to total recoverable criteria.

e. **Hardness-Dependent CTR Metals Criteria.** The *California Toxics Rule* and the *National Toxics Rule* contain water quality criteria for seven metals that vary as a function of hardness. The lower the hardness the lower the water quality criteria. The metals with hardness-dependent criteria include cadmium, copper, chromium III, lead, nickel, silver, and zinc.

This Order has established the criteria for hardness-dependent metals based on the reasonable worst-case ambient hardness as required by the SIP[1], the CTR[2] and State Water Board Order No. WQO 2008-0008 (City of Davis). The SIP and the CTR require the use of “receiving water” or “actual ambient” hardness, respectively, to determine effluent limitations for these metals. (SIP, § 1.2; 40 CFR § 131.38(c)(4)) The CTR does not define whether the term “ambient,” as applied in the regulations, necessarily requires the consideration of upstream as opposed to downstream hardness conditions. Therefore, where reliable, representative data are available, the hardness value for calculating criteria can be the downstream receiving water hardness, after mixing with the effluent (Order WQO 2008-0008, p.

[1] The SIP does not address how to determine the hardness for application to the equations for the protection of aquatic life when using hardness-dependent metals criteria. It simply states, in Section 1.2, that the criteria shall be properly adjusted for hardness using the hardness of the receiving water.

[2] The CTR requires that, for waters with a hardness of 400 mg/L (as $CaCO_3$), or less, the actual ambient hardness of the surface water must be used. It further requires that the hardness values used must be consistent with the design discharge conditions for design flows and mixing zones.

11). The Central Valley Water Board thus has considerable discretion in determining ambient hardness (*Id.*, p.10).

As discussed below, scientific literature provides a reliable method for calculating protective hardness-dependent CTR criteria, considering all discharge conditions. This methodology produces hardness-dependent CTR criteria based on the reasonable worst-case downstream ambient hardness that ensure these metals do not cause receiving water toxicity under any downstream receiving water condition. Under this methodology, the Central Valley Water Board considers all hardness conditions that could occur in the ambient downstream receiving water after the effluent has mixed with the water body[1]. This ensures that effluent limitations are fully protective of aquatic life in all areas of the receiving water affected by the discharge under all flow conditions, at the fully mixed location, and throughout the water body including at the point of discharge into the water body.

i. **Conducting the Reasonable Potential Analysis (RPA).** The SIP in Section 1.3 states, "*The RWQCB shall…determine whether a discharge may: (1) cause, (2) have a reasonable potential to cause, or (3) contribute to an excursion above any applicable priority pollutant criterion or objective*." Section 1.3 provides a step-by-step procedure for conducting the RPA. The procedure requires the comparison of the maximum effluent concentration (MEC) and maximum ambient background concentration to the applicable criterion that has been properly adjusted for hardness. Unless otherwise noted, for the hardness-dependent CTR metals criteria the following procedures were followed for properly adjusting the criterion for hardness when conducting the RPA.

(a) The SIP requires WQBELs if the MEC is equal to or exceeds the applicable criterion, adjusted for hardness. For comparing the MEC to the applicable criterion, the "fully mixed" reasonable worst-case downstream ambient hardness was used to adjust the criterion. In this evaluation the portion of the receiving water affected by the discharge is analyzed. For hardness-dependent criteria, the hardness of the effluent has an impact on the determination of the applicable criterion in areas of the receiving water affected by the discharge. Therefore, for comparing the MEC to the applicable criterion, the reasonable worst-case downstream ambient hardness was used to adjust the criterion. For this situation it is necessary to consider the hardness of the effluent in determining the applicable hardness to adjust the criterion. The procedures for determining the applicable criterion after proper adjustment using the reasonable worst-case downstream ambient hardness is outlined in subsection ii, below.

(b) The SIP requires WQBELs if the receiving water is impaired upstream (outside the influence) of the discharge, i.e., if the maximum ambient background concentration of a pollutant exceeds the applicable criterion, adjusted for hardness[2]. For comparing the Maximum Ambient Background Concentration to the applicable criterion, the reasonable worst-case upstream ambient hardness was used to adjust the criteria. This is appropriate, because this area is outside the influence of the

[1] All effluent discharges will change the ambient downstream metals concentration and hardness. It is not possible to change the metals concentration without also changing the hardness.
[2] The pollutant must also be detected in the effluent.

discharge. Since the discharge does not impact the upstream hardness, the effect of the effluent hardness was not included in this evaluation.

ii. **Calculating Water Quality-Based Effluent Limitations.** The remaining discussion in this section relates to the development of WQBELs when it has been determined that the discharge has reasonable potential to cause or contribute to an exceedance of the CTR hardness-dependent metals criteria in the receiving water.

A 2006 Study[1] developed procedures for calculating the effluent concentration allowance (ECA)[2] for CTR hardness-dependent metals. The 2006 Study demonstrated that it is necessary to evaluate all discharge conditions (e.g. high and low flow conditions) and the hardness and metals concentrations of the effluent and receiving water when determining the appropriate ECA for these hardness-dependent metals. This method is superior to relying on downstream receiving water samples alone because it captures all possible mixed conditions in the receiving water. Both receiving water and effluent hardness vary based on flow and other factors, but the variability of receiving water and effluent hardness is sometimes independent. Using a calculated hardness value ensures that the Central Valley Water Board considers all possible mixed downstream values that may result from these two independent variables. Relying on receiving water sampling alone is less likely to capture all possible mixed downstream conditions.

The equation describing the total recoverable regulatory criterion, as established in the CTR[3], is as follows:

CTR Criterion = WER x ($e^{m[\ln(H)]+b}$) (Equation 1)

Where:

H = hardness (as $CaCO_3$)[4]

WER = water-effect ratio

m, b = metal- and criterion-specific constants

In accordance with the CTR, the default value for the WER is 1. A WER study must be conducted to use a value other than 1. The constants “m” and “b” are specific to both the metal under consideration, and the type of total recoverable criterion (i.e., acute or chronic). The metal-specific values for these constants are provided in the CTR at paragraph (b)(2), Table 1.

The equation for the ECA is defined in Section 1.4, Step 2, of the SIP and is as follows:

ECA = C (when C ≤ B)[5] (Equation 2)

Where:

[1] Emerick, R.W.; Borroum, Y.; & Pedri, J.E., 2006. California and National Toxics Rule Implementation and Development of Protective Hardness Based Metal Effluent Limitations. WEFTEC, Chicago, Ill.
[2] The ECA is defined in Appendix 1 of the SIP (page Appendix 1-2). The ECA is used to calculate WQBELs in accordance with Section 1.4 of the SIP.
[3] 40 CFR § 131.38(b)(2).
[4] For this discussion, all hardness values are in mg/L as $CaCO_3$.
[5] The 2006 Study assumes the ambient background metals concentration is equal to the CTR criterion (i.e., C ≤ B)

C = the priority pollutant criterion/objective, adjusted for hardness (see Equation 1, above)

B = the ambient background concentration

The 2006 Study demonstrated that the relationship between hardness and the calculated criteria is the same for some metals, so the same procedure for calculating the ECA may be used for these metals. The same procedure can be used for cadmium (chronic), chromium III, copper, nickel, and zinc. These metals are hereinafter referred to as "Concave Down Metals". "Concave Down" refers to the shape of the curve represented by the relationship between hardness and the CTR criteria in Equation 1. Another similar procedure can be used for determining the ECA for cadmium (acute), lead, and silver, which are referred to hereafter as "Concave Up Metals".

ECA for Cadmium (Chronic), Chromium III, Copper, Nickel, and Zinc – For Concave Down Metals (i.e., cadmium (chronic), chromium III, copper, nickel, and zinc) the 2006 Study demonstrates that when the effluent is in compliance with the CTR criteria and the upstream receiving water is in compliance with the CTR criteria, any mixture of the effluent and receiving water will always be in compliance with the CTR criteria[1]. The 2006 Study proves that regardless of whether the effluent hardness is lower or greater than the upstream hardness, the reasonable worst-case flow condition is the effluent dominated condition (i.e., no receiving water flow)[2]. Consequently, for Concave Down Metals, the CTR criteria have been calculated using the downstream ambient hardness under this condition.

The effluent hardness ranged from 364 mg/L to 713 mg/L, based on 35 samples collected between January 2011 and December 2013. The upstream receiving water hardness varied from 140 mg/L to 472 mg/L, based on 27 samples collected between January 2011 and December 2013. Under the effluent dominated condition, the reasonable worst-case downstream ambient hardness is 364 mg/L. As demonstrated in the example shown in Table F-6, below, using this hardness to calculate the ECA for all Concave Down Metals will result in WQBELs that are protective under all flow conditions, from the effluent dominated condition to high flow condition. This example for copper assumes the following conservative conditions for the upstream receiving water:

Upstream receiving water <u>always</u> at the lowest observed upstream receiving water hardness (i.e., 140 mg/L)

Upstream receiving water copper concentration <u>always</u> at the CTR criteria (i.e., no assimilative capacity).

Using these reasonable worst-case receiving water conditions, a simple mass balance (as shown in Equation 3, below) accounts for all possible mixtures of effluent and receiving water under all flow conditions.

[1] 2006 Study, p. 5700

[2] There are two typographical errors in the 2006 Study in the discussion of Concave Down Metals when the effluent hardness is less than the receiving water hardness. The effluent and receiving water hardness were transposed in the discussion, but the correct hardness values were used in the calculations. The typographical errors were confirmed by the author of the 2006 Study, by email dated 1 April 2011, from Dr. Robert Emerick to Mr. James Marshall, Central Valley Water Board.

$C_{MIX} = C_{RW} \times (1\text{-}EF) + C_{Eff} \times (EF)$ (Equation 3)

Where:

C_{MIX} = Mixed concentration (e.g. metals or hardness)

C_{RW} = Upstream receiving water concentration

C_{Eff} = Effluent concentration

EF = Effluent Fraction

In this example, for copper, for any receiving water flow condition (high flow to low flow), the fully-mixed downstream ambient copper concentration is in compliance with the CTR criteria[1].

Table F-6. Copper ECA Evaluation

Lowest Observed Effluent Hardness					**364 mg/L (as $CaCO_3$)**
Lowest Observed Upstream Receiving Water Hardness					**140 mg/L (as $CaCO_3$)**
Highest Assumed Upstream Receiving Water Copper Concentration					**12 µg/L[1]**
Copper $ECA_{chronic}$[2]					**28 µg/L**
Effluent Fraction[6]		**Fully Mixed Downstream Ambient Concentration**			
		Hardness[3] (mg/L)	**CTR Criteria[4] (µg/L)**	**Copper[5] (µg/L)**	**Complies with CTR Criteria**
High Flow	1%	142	13	13	**Yes**
	5%	151	13	13	**Yes**
	15%	174	15	15	**Yes**
	25%	196	17	16	**Yes**
	50%	252	21	20	**Yes**
	75%	308	24	24	**Yes**
Low Flow	100%	364	28	28	**Yes**

1 Highest assumed upstream receiving water copper concentration calculated using Equation 1 for chronic criterion at a hardness of 140 mg/L.
2 ECA calculated using Equation 1 for chronic criterion at a hardness of 364 mg/L.
3 Fully mixed downstream ambient hardness is the mixture of the receiving water and effluent hardness at the applicable effluent fraction using Equation 3.
4 Fully mixed downstream ambient criteria are the chronic criteria calculated using Equation 1 at the mixed hardness.
5 Fully mixed downstream ambient copper concentration is the mixture of the receiving water and effluent copper concentrations at the applicable effluent fraction using Equation 3.
6 The effluent fraction ranges from 1% at the high receiving water flow condition, to 100% at the lowest receiving water flow condition (i.e., effluent dominated).

ECA for Cadmium (Acute), Lead, and Silver (Acute) – For Concave Up Metals (i.e., cadmium (acute), lead, and silver (acute)), the relationship between hardness and the metals criteria is different than for Concave Down Metals. The 2006 Study demonstrates that for Concave Up Metals, the effluent and upstream receiving water can be in compliance with the CTR criteria, but

[1] This method considers the actual lowest observed upstream hardness and actual lowest observed effluent hardness to determine the reasonable worst-case ambient downstream hardness under all possible receiving water flow conditions. Table F-6 demonstrates that the receiving water is always in compliance with the CTR criteria at the fully-mixed location in the receiving water. It also demonstrates that the receiving water is in compliance with the CTR criteria for all mixtures from the point of discharge to the fully-mixed location. Therefore, a mixing zone is not used for compliance.

the resulting mixture may contain metals concentrations that exceed the CTR criteria and could cause toxicity. For these metals, the 2006 Study provides a mathematical approach to calculate the ECA that is protective of aquatic life, in all areas of the receiving water affected by the discharge, under all discharge and receiving water flow conditions (see Equation 4, below).

The ECA, as calculated using Equation 4, is based on the reasonable worst-case upstream receiving water hardness, the lowest observed effluent hardness, and assuming no receiving water assimilative capacity for metals (i.e., ambient background metals concentrations are at their respective CTR criterion). Equation 4 is not used in place of the CTR equation (Equation 1). Rather, Equation 4, which is derived using the CTR equation, is used as a direct approach for calculating the ECA. This replaces an iterative approach for calculating the ECA. The CTR equation has been used to evaluate the receiving water downstream of the discharge at all discharge and flow conditions to ensure the ECA is protective (e.g., see Table F-7).

$$ECA = \left(\frac{m(H_e - H_{rw})\left(e^{m\{ln(H_{rw})\}+b}\right)}{H_{rw}} \right) + e^{m\{ln(H_{rw})\}+b} \quad \text{(Equation 4)}$$

Where:

m, b = criterion specific constants (from CTR)

H_e = lowest observed effluent hardness

H_{rw} = reasonable worst-case upstream receiving water hardness

An example similar to the Concave Down Metals is shown for lead, a Concave Up Metal, in Table F-7, below. As previously mentioned, the lowest effluent hardness is 364 mg/L, while the upstream receiving water hardness ranged from 140 mg/L to 472 mg/L. In this case, the reasonable worst-case upstream receiving water hardness to use in Equation 4 to calculate the ECA is 140 mg/L.

Using the procedures discussed above to calculate the ECA for all Concave Up Metals will result in WQBELs that are protective under all potential effluent/receiving water flow conditions (high flow to low flow) and under all known hardness conditions, as demonstrated in Table F-7, for lead.

Table F-7. Lead ECA Evaluation

Lowest Observed Effluent Hardness					**364 mg/L**
Reasonable Worst-case Upstream Receiving Water Hardness					**140 mg/L**
Reasonable Worst-case Upstream Receiving Water Lead Concentration					**4.9 µg/L[1]**
Lead $ECA_{chronic}$[2]					**15 µg/L**
Effluent Fraction[6]		**Fully Mixed Downstream Ambient Concentration**			
		Hardness[3] (mg/L) (as $CaCO_3$)	**CTR Criteria[4] (µg/L)**	**Lead[5] (µg/L)**	**Complies with CTR Criteria**
High Flow	1%	142	5.0	5.0	**Yes**
	5%	151	5.4	5.4	**Yes**
↓	15%	174	6.4	6.4	**Yes**
	25%	196	7.5	7.4	**Yes**
	50%	252	10	9.9	**Yes**
Low	75%	308	13	12	**Yes**
Flow	100%	364	16	15	**Yes**

1 Reasonable worst-case upstream receiving water lead concentration calculated using Equation 1 for chronic criterion at a hardness of 140 mg/L.
2 ECA calculated using Equation 4 for chronic criteria.
3 Fully mixed downstream ambient hardness is the mixture of the receiving water and effluent hardness at the applicable effluent fraction.
4 Fully mixed downstream ambient criteria are the chronic criteria calculated using Equation 1 at the mixed hardness.
5 Fully mixed downstream ambient lead concentration is the mixture of the receiving water and effluent lead concentrations at the applicable effluent fraction.
6 The effluent fraction ranges from 1% at the high receiving water flow condition, to 100% at the lowest receiving water flow condition (i.e., effluent dominated).

Based on the procedures discussed above, Table F-8 lists all the CTR hardness-dependent metals and the associated ECA used in this Order.

Table F-8. Summary of ECA Evaluations for CTR Hardness-dependent Metals

CTR Metals	ECA (µg/L, total recoverable)[1]	
	acute	**chronic**
Copper	47	28
Chromium III	5,000	600
Cadmium	19	6.8
Lead	380	14
Nickel	1,400	160
Silver	27	--
Zinc	360	360

1 Metal criteria rounded to two significant figures in accordance with the CTR.

3. Determining the Need for WQBELs

a. **Constituents with No Reasonable Potential.** WQBELs are not included in this Order for constituents that do not demonstrate reasonable potential (i.e. constituents were not detected in the effluent or receiving water); however, monitoring for those pollutants is established in this Order as required by the SIP. If the results of effluent monitoring demonstrate reasonable potential, this Order may be reopened and modified by adding an appropriate effluent limitation.

Most constituents with no reasonable potential are not discussed in this Order. However, the following constituents were found to have no reasonable potential after assessment of the data:

i. **Bis (2-ethylhexyl) Phthalate**

(a) **WQO.** The CTR includes a criterion of 5.9 µg/L for bis (2-ethylhexyl) phthalate for the protection of human health for waters from which organisms only are consumed.

(b) **RPA Results.** Bis (2-ethylhexyl) phthalate is a common contaminant of sample containers, sampling apparatus, and analytical equipment, and sources of detected bis (2-ethylhexyl) phthalate may be from plastics used for sampling or analytical equipment. “Clean techniques” are used to ensure that sample containers, sampling apparatus, and analytical equipment are not sources of the detections for monitoring bis (2-ethylhexyl) phthalate.

As shown in the table below, bis (2-ethylhexyl) phthalate was detected once above the criterion in the three effluent samples collected between January 2011 and December 2013. Upstream receiving water for bis (2-ethylhexyl) phthalate is not available.

Table F-9. Bis (2-Ethylhexyl) Phthalate Effluent Data Summary

Sample Date	Results (µg/L)	SIP ML (µg/L)	RL (µg/L)
21 September 2011	14	5	10
26 July 2012	ND	5	5
25 July 2013	0.4 J	5	5

SIP Section 2.4.2 states that the Minimum Level (ML) is the lowest quantifiable concentration in a sample based on the proper application of all method-based analytical procedures and the absence of any matrix interferences.

(1) SIP Section 1.2 requires that the Regional Water Board use all available, valid, relevant, representative data and information, as determined by the Regional Water Board, to implement the SIP. SIP Section 1.2 further states that the Regional Board has the discretion to consider if any data are inappropriate or insufficient for use in implementing the SIP.

(2) In implementing its discretion, the Central Valley Water Board is not finding that reasonable potential does not exist; rather the Central Valley Water Board cannot make such a determination given the invalid data. Therefore, the Central Valley Water Board will require additional monitoring for such constituents until such time a determination can be made in accordance with the SIP policy.

SIP Appendix 4 cites two MLs for bis (2-ethylhexyl) phthalate. The lowest applicable ML cited for bis (2-ethylhexyl) phthalate is 5 µg/L. For the 21 September 2011 sample, the Discharger used an analytical method that was not as sensitive as the minimum level required by the SIP. The two remaining effluent results were all estimated values (i.e., DNQ) or non-detect. The Discharger has indicated that the samples were collected using glass bottles and grab samples. However, the laboratory sheet for

the 21 September 2011 sample denoted that "*This is not a NELAP accredited analyte*," and that bis (2-ethylhexyl) phthalate was detected but not quantified in the blank at an estimated concentration of 0.36 µg/L, which indicates possible laboratory contamination. Therefore, the submitted effluent data is inappropriate and insufficient to determine reasonable potential under the SIP.

Section 1.3, Step 8 of the SIP allows the Central Valley Water Board to require additional monitoring for a pollutant in place of an effluent limitation if data are unavailable or insufficient. Instead of limitations, additional monitoring has been established for bis (2-ethylhexyl) phthalate. Should monitoring results indicate that the discharge has the reasonable potential to cause or contribute to an exceedance of a water quality standard, this Order may be reopened and modified by adding appropriate effluent limitations.

ii. **Diazinon and Chlorpyrifos**

(a) **WQO.** The Central Valley Water Board completed a TMDL for diazinon and chlorpyrifos in the Sacramento – San Joaquin Delta Waterways and amended the Basin Plan to include diazinon and chlorpyrifos waste load allocations and water quality objectives. The Basin Plan Amendment for the Control of Diazinon and Chlorpyrifos Runoff into the Sacramento – San Joaquin Delta was adopted by the Central Valley Water Board on 23 June 2006 and became effective on 10 October 2007.

The amendment "…*modifies Basin Plan Chapter III (Water Quality Objectives) to establish site specific number objectives for diazinon and chlorpyrifos in the Delta Waterways*." The amendment also "…*identifies the requirements to meet the additive formula already in Basin Plan Chapter IV (Implementation), for the additive toxicity of diazinon and chlorpyrifos*."

The amendment states that "*The waste load allocations for all NPDES-permitted dischargers…shall not exceed the sum (S) of one (1) as defined below.*

$$S = \frac{C_d}{WQO_d} + \frac{C_c}{WQO_c} \leq 1.0$$

Where:

C_d = *diazinon concentration in µg/L of point source discharge*

C_c = *chlorpyrifos concentration in µg/L of point source discharge*

WQO_d = *acute or chronic diazinon water quality objective in µg/L*

WQO_c = *acute or chronic chlorpyrifos water quality objective in µg/L*

Available samples collected within the applicable averaging period for the water quality objective will be used to determine compliance with the allocations and loading capacity. For purposes of calculating the sum (S) above, analytical results that are reported as 'non-detectable' concentrations are considered to be zero."

Appendix A of the Diazinon and Chlorpyrifos TMDL lists Delta waterways subject to the TMDL and includes the Yolo Bypass. Footnote 2 of

Appendix A states, "*When flooded, the entire Yolo Bypass is a Delta Waterway. When the Delta is not flooded, the Toe Drain is the only Delta Waterway within the Yolo Bypass.*" Tule Canal is a part of the Yolo Bypass. Therefore, the WLA for diazinon and chlorpyrifos is applicable to the Facility when the Yolo Bypass is flooded.

(b) **RPA Results.** Effluent and receiving water monitoring data for diazinon and chlorpyrifos is not available. However, since these pesticides have been banned for public use, they are not expected to be present in the effluent. The discharge does not have reasonable potential, but due to the TMDL for diazinon and chlorpyrifos in the Delta, WQBELs for these constituents are required. The TMDL waste load allocation applies to all NPDES dischargers to Delta waterways (including Yolo Bypass when flooded) and will serve as the basis for WQBELs at Discharge Point 001.

(c) **WQBELs.** WQBELs for diazinon and chlorpyrifos are required based on the TMDL for diazinon and chlorpyrifos for the Delta. Therefore, this Order includes effluent limits calculated based on the waste load allocations contained in the TMDL, as follows:

(1) Average Monthly Effluent Limitation (AMEL)

$$S_{AMEL} = \frac{C_{D\ AVG}}{0.079} + \frac{C_{C\ AVG}}{0.012} \leq 1.0$$

$C_{D\text{-}avg}$ = average monthly diazinon effluent concentration in µg/L

$C_{C\text{-}avg}$ = average monthly chlorpyrifos effluent concentration in µg/L

(2) Maximum Daily Effluent Limitation (MDEL)

$$S_{MDEL} = \frac{C_{D\ MAX}}{0.16} + \frac{C_{C\ MAX}}{0.025} \leq 1.0$$

$C_{D\text{-}max}$ = maximum daily diazinon effluent concentration in µg/L

$C_{C\text{-}max}$ = maximum daily chlorpyrifos effluent concentration in µg/L

(d) **Plant Performance and Attainability**. Monitoring data is not available to determine if the Discharger can consistently comply with the new effluent limitations for diazinon and chlorpyrifos. However, since these pesticides have been banned for public use, they are not expected to be present in the influent to the Facility. The Central Valley Water Board concludes, therefore, that immediate compliance with these effluent limitations is feasible.

b. **Constituents with Reasonable Potential.** The Central Valley Water Board finds that the discharge has a reasonable potential to cause or contribute to an in-stream excursion above a water quality standard for ammonia, BOD_5, boron, electrical conductivity (EC), methylmercury, pH, selenium, total coliform organisms, and TSS. WQBELs for these constituents are included in this Order. A summary of the RPA is provided in Attachment G, and a detailed discussion of the RPA for each constituent is provided below.

i. **Ammonia**

(a) **WQO.** In August 2013, U.S. EPA updated its National Ambient Water Quality Criteria (NAWQC) for the protection of freshwater aquatic life for

total ammonia[1]. The 2013 NAWQC for ammonia recommends acute (1-hour average; criteria maximum concentration or CMC) and chronic (30-day average; criteria continuous concentration or CCC) standards that vary based on pH and temperature. U.S. EPA also recommends that no 4-day average concentration should exceed 2.5 times the 30-day CCC. The 2013 NAWQC for ammonia takes into account data for several sensitive freshwater mussel species and non-pulmonate snails that had not previously been tested.

U.S. EPA found that as pH and temperature increased, both the acute and chronic toxicity of ammonia increased for invertebrates. However, U.S. EPA found that only pH significantly influenced acute and chronic ammonia toxicity for fish. Therefore, the 2013 acute NAWQC for ammonia is primarily based on the ammonia effects on species in the genus *Oncorhyncus* (salmonids) at lower temperatures and invertebrates at higher temperatures. However, due to the significant sensitivity unionid mussels have to the chronic toxicity effects of ammonia, the 2013 chronic NAWQC for ammonia is determined primarily by the effects on mussels.

The 2013 ammonia NAWQC document states that "*unionid mussel species are not prevalent in some waters, such as the arid west*." The 2013 ammonia NAWQC also states that, "*In the case of ammonia, where a state demonstrates that mussels are not present on a site-specific basis, the recalculation procedure may be used to remove the mussel species from the national criteria dataset to better represent the species present at the site*." The 2013 ammonia NAWQC document, therefore, includes a recalculation procedure for acute and chronic criteria for waters where mussels are not present. The 2013 ammonia NAWQC also provides criteria for waters where *Oncorhynchus* species are not present and where protection of early life stages of fish genera is unnecessary.

A report by The Nature Conservancy, *Sensitive Freshwater Mussel Surveys in the Pacific Southwest Region: Assessment of Conservation Status* (published August 2010), demonstrates the results of a strategic mussel study and survey conducted during 2008-2009. The study does not contain any survey information for the Tule Canal or the Yolo Bypass in the vicinity of the Facility discharge. The Central Valley Water Board is currently in the process of determining the best way to evaluate receiving waters within the Central Valley for the presence of mussels. Therefore, since the Central Valley Water Board is not aware of any documentation recording the presence of mussels in Tule Canal, the site-specific ammonia criteria for waters where mussels are not present were used. Tule Canal has a potential beneficial use of cold freshwater habitat (COLD) and the presence of salmonids and early fish life stages in the Yolo Bypass is well-documented, therefore, the recommended ammonia criteria for waters where salmonids and early life stages are present were used.

The Central Valley Water Board may require additional information from the Discharger in the future to evaluate whether more restrictive ammonia

[1] *Aquatic Life Ambient Water Quality Criteria for Ammonia – Freshwater*, published August 2013 [EPA 822-R-13-001]

criteria for other species (i.e., unionid mussels) is applicable for Tule Canal. However, at this time, ammonia criteria have been calculated with the assumption that mussels are not present.

The acute criterion was calculated for each day when paired temperature and pH were measured using downstream receiving water data. The minimum observed acute criterion based on the paired data was established as the applicable acute criterion, or 1-hour CMC. The most stringent acute criterion was 2.14 mg/L (as N).

A chronic criterion was calculated for each day when paired temperature data and pH were measured using downstream receiving water data for temperature and pH. Rolling 30-day average criteria were calculated from downstream receiving water data using the criteria calculated for each day and the minimum observed 30-day average criterion was established as the applicable 30-day average chronic criterion, or 30-day CCC. The most stringent 30-day CCC was 1.45 mg/L (as N). The 4-day average concentration is derived in accordance with the U.S. EPA criterion as 2.5 times the 30-day CCC. Based on the 30-day CCC of 1.45 mg/L (as N), the 4-day average concentration that should not be exceeded is 3.63 mg/L.

(b) **RPA Results.** The Facility is a POTW that treats domestic wastewater. Untreated domestic wastewater contains ammonia in concentrations that, without treatment, would be harmful to fish and would violate the Basin Plan narrative toxicity objective if discharged to the receiving water. Reasonable potential therefore exists and effluent limitations are required.

Federal regulations at 40 C.F.R. §122.44(d)(1)(i) requires that, "*Limitations must control all pollutants or pollutant parameters (either conventional, nonconventional, or toxic pollutants) which the Director determines are or may be discharged at a level which will cause, have the reasonable potential to cause, or contribute to an excursion above any State water quality standard, including State narrative criteria for water quality*." For priority pollutants, the SIP dictates the procedures for conducting the RPA. Ammonia is not a priority pollutant. Therefore, the Central Valley Water Board is not restricted to one particular RPA method. Due to the site-specific conditions of the discharge, the Central Valley Water Board has used professional judgment in determining the appropriate method for conducting the RPA for this non-priority pollutant constituent.

U.S. EPA's September 2010 NPDES Permit Writer's Manual, page 6-30, states, "*State implementation procedures might allow, or even require, a permit writer to determine reasonable potential through a qualitative assessment process without using available facility-specific effluent monitoring data or when such data are not available…A permitting authority might also determine that WQBELs are required for specific pollutants for all facilities that exhibit certain operational or discharge characteristics (e.g., WQBELs for pathogens in all permits for POTWs discharging to contact recreational waters).*" U.S. EPA's TSD also recommends that factors other than effluent data should be considered in the RPA, "*When determining whether or not a discharge causes, has the reasonable potential to cause, or contributes to an excursion of a numeric or narrative water quality criterion for individual toxicants or for toxicity, the*

regulatory authority can use a variety of factors and information where facility-specific effluent monitoring data are unavailable. These factors also should be considered with available effluent monitoring data." With regard to POTWs, U.S. EPA recommends that, "*POTWs should also be characterized for the possibility of chlorine and ammonia problems*." (TSD, p. 50)

Nitrification is a biological process that converts ammonia to nitrite and nitrite to nitrate. Denitrification is a process that converts nitrate to nitrite or nitric oxide and then to nitrous oxide or nitrogen gas, which is then released to the atmosphere. The Discharger currently uses nitrification to remove ammonia from the waste stream. Inadequate or incomplete nitrification may result in the discharge of ammonia to the receiving stream. Ammonia is known to cause toxicity to aquatic organisms in surface waters. Discharges of ammonia in concentrations that produce detrimental physiological responses to human, plant, animal, or aquatic life would violate the Basin Plan narrative toxicity objective. Although the Discharger nitrifies the discharge, inadequate or incomplete nitrification creates the potential for ammonia to be discharged and provides the basis for the discharge to have a reasonable potential to cause or contribute to an in-stream excursion above the NAWQC. Therefore, the Central Valley Water Board finds the discharge has reasonable potential for ammonia and WQBELs are required.

(c) **WQBELs.** The Central Valley Water Board calculates WQBELs in accordance with SIP procedures for non-CTR constituents, and ammonia is a non-CTR constituent. The SIP procedure assumes a 4-day averaging period for calculating the long-term average discharge condition (LTA). However, U.S. EPA recommends modifying the procedure for calculating permit limits for ammonia using a 30-day averaging period for the calculation of the LTA corresponding to the 30-day CCC. Therefore, while the LTAs corresponding to the acute and 4-day chronic criteria were calculated according to SIP procedures, the LTA corresponding to the 30-day CCC was calculated assuming a 30-day averaging period. The lowest LTA representing the acute, 4-day CCC, and 30-day CCC is then selected for deriving the average monthly effluent limitation (AMEL) and the maximum daily effluent limitation (MDEL). The remainder of the WQBEL calculation for ammonia was performed according to the SIP procedures. This Order contains a final AMEL and MDEL for ammonia of 1.1 mg/L and 2.1 mg/L, respectively, based on the NAWQC.

(d) **Plant Performance and Attainability.** Based on 435 samples collected between January 2011 and December 2013, effluent ammonia exceeded the MDEL of 2.1 mg/L three times, with a maximum concentration of 5.2 mg/L, and equaled the AMEL of 1.1 mg/L once, all of which occurred in April 2012. As discussed in the cover letter for the April 2012 SMR, the high effluent ammonia resulted from a treatment plant upset caused by a significant loss of biomass in the treatment process. Excluding the April 2012 results, the maximum observed daily maximum and monthly average concentrations were 1.4 mg/L and 0.36 mg/L, respectively, which do not exceed the applicable effluent limitations. The Central Valley Water Board concludes, therefore, that that immediate compliance with these effluent limitations is feasible.

ii. **Mercury**

(a) **WQO.** The Basin Plan contains fish tissue objectives for all Delta waterways listed in Appendix 43 of the Basin Plan that states "... *the average methylmercury concentrations shall not exceed 0.08 and 0.24 mg methylmercury/kg, wet weight, in muscle tissue of trophic level 3 and 4 fish, respectively (150 - 500 mm total length). The average methylmercury concentrations shall not exceed 0.03 mg methylmercury/kg, wet weight, in whole fish less than 50 mm in length*." The Delta Mercury Control Program contains aqueous methylmercury waste load allocations that are calculated to achieve these fish tissue objectives. Methylmercury reductions are assigned to dischargers with concentrations of methylmercury greater than 0.06 ng/L (the concentration of methylmercury in water to meet the fish tissue objective). The Facility is allocated 0.43 g/year of methylmercury, as listed in Table IV-7B of the Basin Plan.

The CTR contains a human health criterion of 51 ng/L for total mercury for waters from aquatic organisms are consumed. However, in 40 CFR Part 131, U.S. EPA acknowledges that the human health criteria may not be protective of some aquatic or endangered species and that "…*more stringent mercury limits may be determined and implemented through use of the State's narrative criterion.*" In the CTR, U.S. EPA reserved the mercury criteria for freshwater and aquatic life and may adopt new criteria at a later date.

(b) **RPA Results.** Section 1.3 of the SIP states, "*The RWQCB shall conduct the analysis in this section for each priority pollutant with an applicable criterion or objective,* ***excluding priority pollutants for which a TMDL has been developed, to determine if a water quality-based effluent limitation is required in the discharger's permit****.*" (emphasis added) Although an RPA is not required, based on the available effluent and receiving water methylmercury data, it appears the discharge is causing or contributing to an exceedance of the concentration of methylmercury in water to meet the site-specific fish tissue objectives in the Basin Plan.

Effluent and receiving water monitoring data for methylmercury and upstream receiving water monitoring data for total mercury is not available. Total mercury was detected but not quantified in the effluent at an estimated concentration of 0.11 µg/L in a 26 July 2014 sample, which was analyzed using EPA Method 200.8. 40 CFR Part 136, which specifies U.S. EPA's approved methods, does not include EPA Method 200.8 as an acceptable method for analysis of mercury. In addition, the Discharger did not utilize clean hands/dirty hands sampling techniques for this sample.

Section 1.2 of the SIP states "*the RWQCB shall have discretion to consider if any data are inappropriate or insufficient for use in implementing this Policy*." Because EPA Method 200.8 is not an approved method under 40 CFR Part 136 for mercury and the Discharger did not use clean hands/dirty hands sampling techniques, the Central Valley Water Board finds that the 26 July 2014 sample is inappropriate and did not use the data in conducting the RPA for total mercury.

Excluding the 26 July 2012 sample, the MEC for total mercury was 0.0186 µg/L based on the remaining 37 samples collected between January 2011 and December 2013. Of these, 36 were analyzed using

EPA Method 1631E, which is approved under 40 CFR Part 136 and has an RL below the CTR criterion. The Discharger conducted this monitoring using clean hands/dirty hands sampling techniques, as required by the method.

Table F-10. Total Mercury Effluent Data Summary

Sample Date	Analytical Method	Results (µg/L)	SIP ML (µg/L)	RL (µg/L)
26 July 2012	EPA 200.8	J 0.11	0.2	0.2
25 July 2013	EPA 245.7	ND	0.2	0.2
Remaining 36 Samples	EPA 1631	0.0186[1]	0.2	0.00025

[1] Represents the maximum observed concentration for samples analyzed using EPA Method 1631 between January 2011 and December 2013.

Based on the available data, which utilizes clean hands/dirty hands techniques and which utilizes analytical methods approved under 40 CFR Part 136, mercury in the discharge does not have reasonable potential to cause or contribute to an in-stream excursion above the CTR criterion for the protection of human health for total mercury.

(c) **WQBELs.** The Basin Plan's Delta Mercury Control Program includes wasteload allocations for POTW's in the Delta and Yolo Bypass, including for the Discharger. This Order contains a final WQBEL for methylmercury based on the wasteload allocation. The total calendar year annual methylmercury load shall not exceed 0.43 grams.

(d) **Plant Performance and Attainability.** Based on the available information, the Central Valley Water Board finds the Discharger is unable to immediately comply with the final WQBELs for methylmercury. Therefore, a compliance schedule in accordance with the State Water Board's Compliance Schedule Policy and the Delta Mercury Control Program has been established in this Order

iii. **Pathogens**

(a) **WQO.** DPH has developed reclamation criteria, CCR, Division 4, Chapter 3 (Title 22), for the reuse of wastewater. Title 22 requires that for spray irrigation of food crops, parks, playgrounds, schoolyards, and other areas of similar public access, wastewater be adequately disinfected, oxidized, coagulated, clarified, and filtered, and that the effluent total coliform levels not exceed 2.2 MPN/100 mL as a 7-day median; 23 MPN/100 mL, not to be exceeded more than once in a 30-day period; and 240 MPN/100 mL, at any time.

Title 22 also requires that recycled water used as a source of water supply for non-restricted recreational impoundments be disinfected tertiary recycled water that has been subjected to conventional treatment. A non-restricted recreational impoundment is defined as "*…an impoundment of recycled water, in which no limitations are imposed on body-contact water recreational activities.*" Title 22 is not directly applicable to surface waters; however, the Central Valley Water Board finds that it is appropriate to apply an equivalent level of treatment to that required by the DPH's reclamation criteria because the receiving water is used for irrigation of agricultural land and for contact recreation purposes. The stringent

disinfection criteria of Title 22 are appropriate since the undiluted effluent may be used for the irrigation of food crops and/or for body-contact water recreation. Coliform organisms are intended as an indicator of the effectiveness of the entire treatment train and the effectiveness of removing other pathogens.

(b) **RPA Results.** Raw domestic wastewater inherently contains human pathogens that threaten human health and life, and constitute a threatened pollution and nuisance under CWC Section 13050 if discharged untreated to the receiving water. Reasonable potential for pathogens therefore exists and WQBELs are required.

Federal regulations at 40 C.F.R. §122.44(d)(1)(i) requires that, "*Limitations must control all pollutants or pollutant parameters (either conventional, nonconventional, or toxic pollutants) which the Director determines are or may be discharged at a level which will cause, have the reasonable potential to cause, or contribute to an excursion above any State water quality standard, including State narrative criteria for water quality*." For priority pollutants, the SIP dictates the procedures for conducting the RPA. Pathogens are not priority pollutants. Therefore, the Central Valley Water Board is not restricted to one particular RPA method. Due to the site-specific conditions of the discharge, the Central Valley Water Board has used professional judgment in determining the appropriate method for conducting the RPA for this non-priority pollutant constituent.

U.S. EPA's September 2010 NPDES Permit Writer's Manual, page 6-30, states, "*State implementation procedures might allow, or even require, a permit writer to determine reasonable potential through a qualitative assessment process without using available facility-specific effluent monitoring data or when such data are not available…A permitting authority might also determine that WQBELs are required for specific pollutants for all facilities that exhibit certain operational or discharge characteristics (e.g., WQBELs for pathogens in all permits for POTWs discharging to contact recreational waters)*." U.S. EPA's TSD also recommends that factors other than effluent data should be considered in the RPA, "*When determining whether or not a discharge causes, has the reasonable potential to cause, or contributes to an excursion of a numeric or narrative water quality criterion for individual toxicants or for toxicity, the regulatory authority can use a variety of factors and information where facility-specific effluent monitoring data are unavailable. These factors also should be considered with available effluent monitoring data*." (TSD, p. 50).

The beneficial uses of Tule Canal include water contact recreation and agricultural irrigation supply, and there is, at times, less than 20:1 dilution. To protect these beneficial uses, the Central Valley Water Board finds that the wastewater must be disinfected and adequately treated to prevent disease. Although the Discharger provides disinfection, inadequate or incomplete disinfection creates the potential for pathogens to be discharged. Therefore, the Central Valley Water Board finds the discharge has reasonable potential for pathogens and WQBELs are required.

(c) **WQBELs.** In accordance with the requirements of Title 22, this Order includes effluent limitations for total coliform organisms of 2.2 MPN/100 mL as a 7-day median; 23 MPN/100 mL, not to be exceeded more than once in a 30-day period; and 240 MPN/100 mL as an instantaneous maximum.

The tertiary treatment process, or equivalent, is capable of reliably treating wastewater to a turbidity level of 2 nephelometric turbidity units (NTU) as a daily average. Failure of the filtration system such that virus removal is impaired would normally result in increased particles in the effluent, which result in higher effluent turbidity. Turbidity has a major advantage for monitoring filter performance. Coliform testing, by comparison, is not conducted continuously and requires several hours, to days, to identify high coliform concentrations. Therefore, to ensure compliance with the DPH recommended Title 22 disinfection criteria, weekly average specifications are impracticable for turbidity. This Order includes operational specifications for turbidity of 2 NTU as a daily average; 5 NTU, not to be exceeded more than 5 percent of the time within a 24-hour period; and 10 NTU as an instantaneous maximum.

This Order contains effluent limitations for BOD_5, total coliform organisms, and TSS and requires a tertiary level of treatment, or equivalent, necessary to protect the beneficial uses of the receiving water. The Central Valley Water Board has previously considered the factors in Water Code section 13241 in establishing these requirements.

Final WQBELs for BOD_5 and TSS are based on the technical capability of the tertiary process, which is necessary to protect the beneficial uses of the receiving water. BOD_5 is a measure of the amount of oxygen used in the biochemical oxidation of organic matter. The tertiary treatment standards for BOD_5 and TSS are indicators of the effectiveness of the tertiary treatment process. The principal design parameter for wastewater treatment plants is the daily BOD_5 and TSS loading rates and the corresponding removal rate of the system. The application of tertiary treatment processes results in the ability to achieve lower levels for BOD_5 and TSS than the secondary standards currently prescribed. Therefore, this Order requires AMELs for BOD_5 and TSS of 10 mg/L, which are technically based on the capability of a tertiary system. In addition to the average weekly effluent limitations (AWELs) and AMELs, MDELs for BOD_5 and TSS are included in the Order to ensure that the treatment works are not organically overloaded and operate in accordance with design capabilities.

(d) **Plant Performance and Attainability.** The Facility possesses a filtration and UV disinfection system which was designed to achieve Title 22 criteria. The Central Valley Water Board concludes, therefore, that immediate compliance with these effluent limitations is feasible.

iv. **pH**

(a) **WQO.** The Basin Plan includes a water quality objective for surface waters (except for Goose Lake) that the "*…pH shall not be depressed below 6.5 nor raised above 8.5.*"

(b) **RPA Results.** Raw domestic wastewater inherently has variable pH. Additionally, some wastewater treatment processes can increase or decrease wastewater pH which if not properly controlled, would violate the Basin Plan's numeric objective for pH in the receiving water. Therefore, reasonable potential exists for pH and WQBELs are required.

Federal regulations at 40 C.F.R. §122.44(d)(1)(i) requires that, "*Limitations must control all pollutants or pollutant parameters (either conventional, nonconventional, or toxic pollutants) which the Director determines are or may be discharged at a level which will cause, have the reasonable potential to cause, or contribute to an excursion above any State water quality standard, including State narrative criteria for water quality*." For priority pollutants, the SIP dictates the procedures for conducting the RPA. pH is not a priority pollutant. Therefore, the Central Valley Water Board is not restricted to one particular RPA method. Due to the site-specific conditions of the discharge, the Central Valley Water Board has used professional judgment in determining the appropriate method for conducting the RPA for this non-priority pollutant constituent.

U.S. EPA's September 2010 NPDES Permit Writer's Manual, page 6-30, states, "*State implementation procedures might allow, or even require, a permit writer to determine reasonable potential through a qualitative assessment process without using available facility-specific effluent monitoring data or when such data are not available…A permitting authority might also determine that WQBELs are required for specific pollutants for all facilities that exhibit certain operational or discharge characteristics (e.g., WQBELs for pathogens in all permits for POTWs discharging to contact recreational waters).*" U.S. EPA's TSD also recommends that factors other than effluent data should be considered in the RPA, "*When determining whether or not a discharge causes, has the reasonable potential to cause, or contributes to an excursion of a numeric or narrative water quality criterion for individual toxicants or for toxicity, the regulatory authority can use a variety of factors and information where facility-specific effluent monitoring data are unavailable. These factors also should be considered with available effluent monitoring data*." (TSD, p. 50)

The Facility is a POTW that treats domestic wastewater. Based on 1,096 samples taken from January 2011 to December 2013, the maximum pH reported was 7.8 and the minimum was 6.94. The Facility did not exceed the instantaneous maximum effluent limitation or fall below the instantaneous minimum effluent limitation. Although the Discharger has proper pH controls in place, the pH for the Facility's influent varies due to the nature of municipal sewage, which provides the basis for the discharge to have a reasonable potential to cause or contribute to an in-stream excursion above the Basin Plan's numeric objective for pH in the receiving water. Therefore, WQBELs for pH are required in this Order.

(c) **WQBELs.** Effluent limitations for pH of 6.5 as an instantaneous minimum and 8.5 as an instantaneous maximum are included in this Order based on protection of the Basin Plan objectives for pH.

(d) **Plant Performance and Attainability.** The effluent pH did not exceed nor fall below instantaneous effluent limitations. The Central Valley Water

Board concludes, therefore, that immediate compliance with these effluent limitations is feasible.

v. **Salinity**

(a) **WQO.** The Basin Plan contains a chemical constituent objective that incorporates state MCLs, contains a narrative objective, and contains numeric water quality objectives for certain specified water bodies for EC, total dissolved solids, sulfate, chloride, and boron. The U.S. EPA Ambient Water Quality Criteria for Chloride recommends acute and chronic criteria for the protection of aquatic life. There are no U.S. EPA water quality criteria for the protection of aquatic life for EC, total dissolved solids, and sulfate. Additionally, there are no U.S. EPA numeric water quality criteria for the protection of agricultural, live stock, and industrial uses. Numeric values for the protection of these uses are typically based on site specific conditions and evaluations to determine the appropriate constituent threshold necessary to interpret the narrative chemical constituent Basin Plan objective. The Central Valley Water Board must determine the applicable numeric limit to implement the narrative objective for the protection of agricultural supply. The Central Valley Water Board is currently implementing the CV-SALTS initiative to develop a Basin Plan Amendment that will establish a salt and nitrate Management Plan for the Central Valley. Through this effort the Basin Plan will be amended to define how the narrative water quality objective is to be interpreted for the protection of agricultural use. All studies conducted through this Order to establish an agricultural limit to implement the narrative objective will be reviewed by and consistent with the efforts currently underway by CV-SALTS.

Table F-11. Salinity Water Quality Criteria/Objectives

Parameter	Agricultural WQ Objective[1]	U.S. EPA NAWQC	Effluent	
			Average[2]	Maximum
EC (µmhos/cm)	Varies	N/A	1,714	2,024
TDS (mg/L)	Varies	N/A	1,027	1,056
Sulfate (mg/L)	Varies	N/A	N/A[3]	N/A[3]
Chloride (mg/L)	Varies	860 1-hr 230 4-day	N/A[3]	N/A[3]
Boron (mg/L)	Varies	N/A	2.5	2.5

1 Narrative chemical constituent objective of the Basin Plan. Procedures for establishing the applicable numeric limitation to implement the narrative objective can be found in the Policy for Application of Water Quality, Chapter IV, Section 8 of the Basin Plan. However, the Basin Plan does not require improvement over naturally occurring background concentrations. In cases where the natural background concentration of a particular constituent exceeds an applicable water quality objective, the natural background concentration will be considered to comply with the objective.

2 Maximum calendar year annual average.

3 N/A = Not Available

Order R5-2009-0010 contained interim performance-based annual average effluent limitations for boron and EC of 3.1 mg/L and 1,835 µmhos/cm, respectively, but did not establish final effluent limitations. Drs. Grattan and Isidoro-Ramirez completed a site-specific

study for boron, EC, and fluoride in 2006 (Grattan, S.R., and Isidoro-Ramirez, D, May 2006, *An Approach to Develop Site-Specific Criteria for Electrical Conductivity, Boron, and Fluoride to Protect Agricultural Beneficial Uses*) (Woodland Study). The Woodland Study demonstrated that a boron concentration of 1.5 mg/L and an EC concentration of 1,400 µmhos/cm are protective of the agricultural beneficial use inside and outside of the Yolo Bypass. These site-specific criteria were developed to protect the agricultural beneficial use by taking into account soil type, irrigation management practices, water quality, crop evapotranspiration, and inputs from irrigation and rainfall, while protecting the most sensitive crops in that area.

(b) **RPA Results**

(1) **Chloride.** Effluent and receiving water monitoring data for chloride is not available.

(2) **Electrical Conductivity.** A review of the Discharger's monitoring reports shows a maximum annual average effluent EC concentration of 1,714 µmhos/cm, with a range from 1,213 µmhos/cm to 2,024 µmhos/cm based on 915 samples collected between January 2011 and December 2013. These levels exceed the site-specific criterion for EC. The maximum observed annual average background receiving water electrical conductivity concentration was 715 µmhos/cm based on 106 samples collected between January 2011 and December 2013.

(3) **Sulfate.** Effluent and receiving water monitoring data for sulfate is not available.

(4) **Total Dissolved Solids.** A review of the Discharger's monitoring reports shows a maximum annual average effluent total dissolved solids concentration of 1,027 mg/L, with a range from 952 mg/L to 1,056 mg/L based on 36 samples collected between January 2011 and December 2013. There are no applicable water quality criteria for total dissolved solids for the discharge; therefore, an RPA was not required. Upstream receiving water data for total dissolved solids is not available.

(5) **Boron.** A review of the Discharger's monitoring reports shows a maximum annual average effluent boron concentration of 2.5 mg/L, with a range from 2.2 mg/L to 2.5 mg/L based on four samples collected between January 2011 and December 2013. These levels exceed the site-specific criterion for boron. Upstream receiving water data for boron is not available.

(c) **WQBELs.** The Central Valley Water Board, with cooperation of the State Water Board, has begun the process to develop a new policy for the regulation of salinity in the Central Valley. In a statement issued at the 16 March 2006, Central Valley Water Board meeting, Board Member Dr. Karl Longley recommended that the Central Valley Water Board continue to exercise its authority to regulate discharges of salt to minimize salinity increases within the Central Valley. Dr. Longley stated, "*The process of developing new salinity control policies does not, therefore, mean that we should stop regulating salt discharges until a salinity Policy is developed.*

In the meantime, the Board should consider all possible interim approaches to continue controlling and regulating salts in a reasonable manner, and encourage all stakeholder groups that may be affected by the Regional Board's policy to actively participate in policy development."

As described above, boron and EC in the discharge has a reasonable potential to cause or contribute to an in-stream excursion above the site-specific objective for the protection of the agricultural beneficial use, as determined by the site-specific Woodland Study.

Until the Central Valley Water Board completes development of a new salinity policy for the Central Valley, this Order includes an annual average effluent limitation of 1.5 mg/L for boron and 1,400 µmhos/cm for EC. These effluent limitations are based on the Woodland Study and are considered to be protective of the agriculture beneficial use. Including effluent limitations for boron and EC will reduce the salt contribution to the receiving water and will ensure compliance for all salinity parameters (i.e., boron, chloride, sulfate, total dissolved solids, and EC).

(d) **Plant Performance and Attainability.** Analysis of the effluent data shows that the limitations appear to put the Discharger in immediate non-compliance. Order R5-2009-0010 included interim effluent limitations for boron and EC. Consistent with Order R5-2009-0010 and as discussed in section IV.E of this Fact Sheet, interim effluent limitations and a compliance schedule have been included in this Order for boron and EC.

vi. **Selenium, Total Recoverable**

(a) **WQO**. The CTR includes maximum 1-hour average and 4-day average criteria of 20 µg/L and 5 µg/L, respectively, for total recoverable selenium for the protection of freshwater aquatic life.

(b) **RPA Results**. The MEC for selenium was 7.9 µg/L (as total recoverable) based on 243 samples collected between January 2011 and December 2013. Upstream receiving water data for selenium is not available. Therefore, selenium in the discharge has a reasonable potential to cause or contribute to an in-stream excursion above the CTR criteria for the protection of freshwater aquatic life.

(c) **WQBELs**. This Order contains a final AMEL and MDEL for selenium of 4.4 µg/L and 7.3 µg/L, respectively, based on the CTR criterion for the protection of freshwater aquatic life.

(d) **Plant Performance and Attainability**. Analysis of the effluent data shows that the MEC is greater than applicable WQBELs. Based on the sample results for the effluent, the limitations appear to put the Discharger in immediate non-compliance. Time Schedule Order (TSO) R5-2011-0907 provided a compliance schedule to achieve compliance with the final effluent limitations for selenium by 21 September 2016. Consistent with TSO R5-2011-0907, a compliance time schedule for compliance with the selenium effluent limitations is established in TSO R5-2011-0907-01, with compliance with final effluent limitations required by 21 September 2016, in accordance with Water Code section 13300, that requires preparation and implementation of a pollution prevention plan in compliance with Water Code section 13263.3.

4. WQBEL Calculations

a. This Order includes WQBELs for ammonia, BOD_5, boron, diazinon and chlorpyrifos, EC, methylmercury, pH, selenium, total coliform organisms, and TSS. The general methodology for calculating WQBELs based on the different criteria/objectives is described in subsections IV.C.5.b through e, below. See Attachment H for the WQBEL calculations.

b. **Effluent Concentration Allowance.** For each water quality criterion/objective, the ECA is calculated using the following steady-state mass balance equation from Section 1.4 of the SIP:

$$ECA = C + D(C - B) \qquad \text{where } C>B, \text{ and}$$
$$ECA = C \qquad \text{where } C \leq B$$

where:

ECA = effluent concentration allowance
D = dilution credit
C = the priority pollutant criterion/objective
B = the ambient background concentration.

According to the SIP, the ambient background concentration (B) in the equation above shall be the observed maximum with the exception that an ECA calculated from a priority pollutant criterion/objective that is intended to protect human health from carcinogenic effects shall use the arithmetic mean concentration of the ambient background samples. For ECAs based on MCLs, which implement the Basin Plan's chemical constituents objective and are applied as annual averages, an arithmetic mean is also used for B due to the long-term basis of the criteria.

c. **Basin Plan Objectives and MCLs.** For WQBELs based on site-specific numeric Basin Plan objectives or MCLs, the effluent limitations are applied directly as the ECA as either an MDEL, AMEL, or average annual effluent limitations, depending on the averaging period of the objective.

d. **Aquatic Toxicity Criteria.** WQBELs based on acute and chronic aquatic toxicity criteria are calculated in accordance with Section 1.4 of the SIP. The ECAs are converted to equivalent long-term averages (i.e. LTA_{acute} and $LTA_{chronic}$) using statistical multipliers and the lowest LTA is used to calculate the AMEL and MDEL using additional statistical multipliers.

e. **Human Health Criteria.** WQBELs based on human health criteria, are also calculated in accordance with Section 1.4 of the SIP. The ECAs are set equal to the AMEL and a statistical multiplier was used to calculate the MDEL.

$$AMEL = mult_{AMEL}\left[\min\left(\overbrace{M_A ECA_{acute}}^{LTA_{acute}}, M_C ECA_{chronic}\right)\right]$$

$$MDEL = mult_{MDEL}\left[\min\left(M_A ECA_{acute}, \underbrace{M_C ECA_{chronic}}_{LTA_{chronic}}\right)\right]$$

$$MDEL_{HH} = \left(\frac{mult_{MDEL}}{mult_{AMEL}}\right) AMEL_{HH}$$

where:

$mult_{AMEL}$ = statistical multiplier converting minimum LTA to AMEL
$mult_{MDEL}$ = statistical multiplier converting minimum LTA to MDEL
M_A = statistical multiplier converting acute ECA to LTA_{acute}
M_C = statistical multiplier converting chronic ECA to $LTA_{chronic}$

Summary of Water Quality-Based Effluent Limitations
Discharge Point 001

Table F-12. Summary of Water Quality-Based Effluent Limitations

Parameter	Units	Effluent Limitations				
		Average Monthly	Average Weekly	Maximum Daily	Instantaneous Minimum	Instantaneous Maximum
Conventional Pollutants						
Biochemical Oxygen Demand (5-day @ 20°C)	mg/L	10	15	20	--	--
	lbs/day[1]	867	1,301	1,735	--	--
pH	standard units	--	--	--	6.5	8.5
Total Suspended Solids	mg/L	10	15	20	--	--
	lbs/day[1]	867	1,301	1,735	--	--
Priority Pollutants						
Selenium, Total Recoverable	µg/L	4.4	--	7.3	--	--
	lbs/day[1]	0.39	--	0.64	--	--
Non-Conventional Pollutants						
Ammonia Nitrogen, Total (as N)	mg/L	1.1	--	2.1	--	--
	lbs/day[1]	95	--	180	--	--
Boron, Total Recoverable	mg/L	1.5[2]	--	--	--	--
Diazinon and Chlorpyrifos	µg/L	[3,4]	--	[3,5]	--	--
Electrical Conductivity @ 25°C	µmhos/cm	1,400[2]	--	--	--	--
Methylmercury	grams/year	--	--	0.43[6]	--	--
Total Coliform Organisms	MPN/100 mL	--	2.2[7]	23[8]	--	240

Parameter	Units	Effluent Limitations				
		Average Monthly	Average Weekly	Maximum Daily	Instantaneous Minimum	Instantaneous Maximum

[1] Based on average dry weather flow of 10.4 MGD.
[2] Applied as an annual average effluent limitation.
[3] Applicable on during periods when the Yolo Bypass is flooded.
[4] Average Monthly Effluent Limitation

$$S_{avg} = \frac{C_{D_avg}}{0.079} + \frac{C_{C_avg}}{0.012} \leq 1.0$$

$C_{D\ avg}$ = average monthly diazinon effluent concentration in µg/L
$C_{C\ avg}$ = average monthly chlorpyrifos effluent concentration in µg/L

[5] Maximum Daily Effluent Limitation

$$S_{max} = \frac{C_{D_max}}{0.16} + \frac{C_{C_max}}{0.025} \leq 1.0$$

$C_{D\ avg}$ = maximum daily diazinon effluent concentration in µg/L
$C_{C\ avg}$ = maximum daily chlorpyrifos effluent concentration in µg/L

[6] The total calendar year annual load of methylmercury shall not exceed 0.43 grams.
[7] Applied as a 7-day median effluent limitation.
[8] Not to be exceeded more than once in any 30-day period.

5. Whole Effluent Toxicity (WET)

For compliance with the Basin Plan's narrative toxicity objective, this Order requires the Discharger to conduct whole effluent toxicity testing for acute and chronic toxicity, as specified in the Monitoring and Reporting Program (Attachment E section V.). This Order also contains effluent limitations for acute toxicity and requires the Discharger to implement best management practices to investigate the causes of, and identify corrective actions to reduce or eliminate effluent toxicity.

a. **Acute Aquatic Toxicity.** The Basin Plan contains a narrative toxicity objective that states, "*All waters shall be maintained free of toxic substances in concentrations that produce detrimental physiological responses in human, plant, animal, or aquatic life*." (Basin Plan at page III-8.00) The Basin Plan also states that, "…*effluent limits based upon acute biotoxicity tests of effluents will be prescribed where appropriate*…".

For priority pollutants, the SIP dictates the procedures for conducting the RPA. Acute toxicity is not a priority pollutant. Therefore, the Central Valley Water Board is not restricted to one particular RPA method. Due to the site-specific conditions of the discharge, the Central Valley Water Board has used professional judgment in determining the appropriate method for conducting the RPA. U.S. EPA's September 2010 NPDES Permit Writer's Manual, page 6-30, states, "*State implementation procedures might allow, or even require, a permit writer to determine reasonable potential through a qualitative assessment process without using available facility-specific effluent monitoring data or when such data are not available…A permitting authority might also determine that WQBELs are required for specific pollutants for all facilities that exhibit certain operational or discharge characteristics (e.g., WQBELs for pathogens in all permits for POTWs discharging to contact recreational waters).*" Although the discharge has been consistently in compliance with the acute effluent limitations, the Facility is a POTW that treats domestic wastewater containing ammonia and other acutely toxic pollutants. Acute toxicity effluent limits are required to ensure compliance with the Basin Plan's narrative toxicity objective.

U.S. EPA Region 9 provided guidance for the development of acute toxicity effluent limitations in the absence of numeric water quality objectives for toxicity in its document titled "Guidance for NPDES Permit Issuance", dated February 1994. In section B.2. "Toxicity Requirements" (pgs. 14-15) it states that, "*In the absence of specific numeric water quality objectives for acute and chronic toxicity, the narrative criterion 'no toxics in toxic amounts' applies. Achievement of the narrative criterion, as applied herein, means that ambient waters shall not demonstrate for acute toxicity: 1) less than 90% survival, 50% of the time, based on the monthly median, or 2) less than 70% survival, 10% of the time, based on any monthly median. For chronic toxicity, ambient waters shall not demonstrate a test result of greater than 1 TUc*." Consistent with Order R5-2009-0010, effluent limitations for acute toxicity have been included in this Order as follows:

Acute Toxicity. Survival of aquatic organisms in 96-hour bioassays of undiluted waste shall be no less than:

Minimum for any one bioassay ---------- 70%
Median for any three consecutive bioassays ---------- 90%

b. **Chronic Aquatic Toxicity.** The Basin Plan contains a narrative toxicity objective that states, "*All waters shall be maintained free of toxic substances in concentrations that produce detrimental physiological responses in human, plant, animal, or aquatic life*." (Basin Plan at page III-8.00). As shown in the table below, based on chronic WET testing performed by the Discharger from January 2011 through December 2013, the discharge has reasonable potential to cause or contribute to an in-stream excursion above of the Basin Plan's narrative toxicity objective.

Table F-13. Whole Effluent Chronic Toxicity Testing Results

Date	Fathead Minnow *Pimephales promelas*		Water Flea *Ceriodaphnia dubia*		Green Algae *Selenastrum capricornutum*
	Survival (TUc)	Growth (TUc)	Survival (TUc)	Reproduction (TUc)	Growth (TUc)
1/25/2011	1	1	1	1	1.33
4/12/2011	1	1	1	1	1
7/26/2011	1	1	1	1	1
10/11/2011	1	1	1	1	1.3
1/10/2012	1	1	1	1	1.33
7/10/2012	1	1	1	1	2
10/23/2012	1	1	1	1	1.3
1/9/2013	1	1	1	1	1.3
4/9/2013	1	1	1	1	1.3
7/9/2013	1	1	1	1	2

No dilution has been granted for the chronic condition for *P. promelas* and *C. dubia*. Therefore, chronic toxicity testing results exceeding 1 chronic toxicity unit (TUc) demonstrates the discharge has a reasonable potential to cause or contribute to an exceedance of the Basin Plan's narrative toxicity objective. Therefore, this Order includes a narrative chronic toxicity effluent limitation.

Numeric chronic WET effluent limitations have not been included in this Order. The SIP contains implementation gaps regarding the appropriate form and implementation of chronic toxicity limits. This has resulted in the petitioning of a

NPDES permit in the Los Angeles Region[1] that contained numeric chronic toxicity effluent limitations. To address the petition, the State Water Board adopted WQO 2003-012 directing its staff to revise the toxicity control provisions in the SIP. The State Water Board states the following in WQO 2003-012, "*In reviewing this petition and receiving comments from numerous interested persons on the propriety of including numeric effluent limitations for chronic toxicity in NPDES permits for publicly-owned treatment works that discharge to inland waters, we have determined that this issue should be considered in a regulatory setting, in order to allow for full public discussion and deliberation. We intend to modify the SIP to specifically address the issue. We anticipate that review will occur within the next year. We therefore decline to make a determination here regarding the propriety of the final numeric effluent limitations for chronic toxicity contained in these permits."* The process to revise the SIP is currently underway. Proposed changes include clarifying the appropriate form of effluent toxicity limits in NPDES permits and general expansion and standardization of toxicity control implementation related to the NPDES permitting process. Since the toxicity control provisions in the SIP are under revision it is infeasible to develop numeric effluent limitations for chronic toxicity. Therefore, this Order requires that the Discharger meet best management practices for compliance with the Basin Plan's narrative toxicity objective, as allowed under 40 CFR 122.44(k).

As shown in the table above, the discharge has frequently exhibited low-level toxicity to *Selenastrum capricornutum* growth. To address the observed toxicity, the Discharger has been engaged in a TRE since 2009. As part of the TRE, the Discharger conducted a facility performance review, five toxicity identification evaluations (TIEs), and toxicity source evaluations. Despite these evaluations, the Discharger has been unable to identify the source of effluent toxicity.

The Discharger has requested a revised numeric monitoring trigger for *S. capricornutum* growth of 2 TUc based on available dilution. The Discharger provided a 19 December 2013 *Results for the October 2013 Rapid Bioassessment Survey of Tule Canal* (Bioassessment) and *Assessment of Dilution Available in Tule Canal* (Dilution Study) supporting the requested dilution credits. The Bioassessment compared the health of macroinvertebrate communities upstream and downstream of the discharge and concluded that the discharge is not adversely affecting the benthic macroinvertebrate community composition in Tule Canal. The Dilution Study evaluated the available dilution between the months of April and October, which corresponds to periods of low flow and the months when toxicity to *S. capricornutum* growth has been observed. The Discharger conducted two separate methods to estimate flows: 1) using surface floats to measure velocity and 2) using mass-balance based on the EC of the effluent and upstream and downstream receiving water. The results are shown in the following table:

Table F-14. Chronic Toxicity Dilution Ratios

Method	Using Surface Floats	Using EC Mass Balance
Daily Discharge Values:	2.5:1 up to 22:1	2.5:1 up to 850:1
10.4 MGD, Permitted Discharge:	0.8:1 up to 6.4:1	0.7:1 up to 277:1

[1] In the Matter of the Review of Own Motion of Waste Discharge Requirements Order Nos. R4-2002-0121 [NPDES No. CA0054011] and R4-2002-0123 [NPDES NO. CA0055119] and Time Schedule Order Nos. R4-2002-0122 and R4-2002-0124 for Los Coyotes and Long Beach Wastewater Reclamation Plants Issued by the California Regional Water Quality Control Board, Los Angeles Region SWRCB/OCC FILES A-1496 AND 1496(a).

However, the Discharger concluded that at current conditions the dilution ratio exceeds and is typically much greater than 1:1, and at permitted capacity, the times when the dilution ratio drops below 1:1 would be brief and sporadic since dilution dropped below 1:1 only once for each method during the study period. The Discharger concluded that "*Given that the toxicity to Selenastrum in bioassays performed on the effluent is a chronic, 4-day effect, it is unlikely that these infrequent and brief periods where dilution drops to just below the 1:1 [7/1 sampling event at permitted discharge 10.4 MGD] threshold when the WPCF is discharging at permitted capacity would result in toxicity to algae in Tule Canal*." Based on the Bioassessment and Dilution Study, this Order includes a numeric monitoring trigger of 2 TUc for *S. capricornutum*. However, the Monitoring and Reporting Program, section VIII.A.2, requires weekly monitoring of the Tule Canal to justify the available dilution and verify that less than 1:1 dilution seldom occurs. This Order may be reopened to adjust the numeric monitoring trigger, if necessary.

To ensure compliance with the Basin Plan's narrative toxicity objective, the Discharger is required to conduct chronic WET testing, as specified in the Monitoring and Reporting Program (Attachment E, section V). Furthermore, the Special Provision contained at VI.C.2.a. of this Order requires the Discharger to investigate the causes of, and identify and implement corrective actions to reduce or eliminate effluent toxicity. If the discharge demonstrates toxicity exceeding the numeric toxicity monitoring trigger, the Discharger is required to initiate a TRE in accordance with an approved TRE workplan. The numeric toxicity monitoring trigger is not an effluent limitation; it is the toxicity threshold at which the Discharger is required to perform accelerated chronic toxicity monitoring, as well as, the threshold to initiate a TRE if effluent toxicity has been demonstrated.

D. Final Effluent Limitation Considerations

1. Mass-based Effluent Limitations

40 CFR 122.45(f)(1) requires effluent limitations be expressed in terms of mass, with some exceptions, and 40 CFR 122.45(f)(2) allows pollutants that are limited in terms of mass to additionally be limited in terms of other units of measurement. This Order includes effluent limitations expressed in terms of mass and concentration. In addition, pursuant to the exceptions to mass limitations provided in 40 CFR 122.45(f)(1), some effluent limitations are not expressed in terms of mass, such as pH and temperature, and when the applicable standards are expressed in terms of concentration (e.g., CTR criteria and MCLs) and mass limitations are not necessary to protect the beneficial uses of the receiving water.

Mass-based effluent limitations have been established in this Order for ammonia, BOD_5, and TSS because they are oxygen demanding substances. Mass-based effluent limitations have been established for selenium because it is bioaccumulative pollutant. Except for the pollutants listed above, mass-based effluent limitations are not included in this Order for pollutant parameters for which effluent limitations are based on water quality objectives and criteria that are concentration-based.

Mass-based effluent limitations were calculated based upon the design flow (Average Dry Weather Flow) permitted in section IV.A.1.f of this Order.

2. Averaging Periods for Effluent Limitations

40 CFR 122.45 (d) requires AWELs and AMELs for POTWs unless impracticable. However, for toxic pollutants and pollutant parameters in water quality permitting, U.S. EPA recommends the use of an MDEL in lieu of AWELs for two reasons. "*First, the*

basis for the 7-day average for POTWs derives from the secondary treatment requirements. This basis is not related to the need for assuring achievement of water quality standards. Second, a 7-day average, which could comprise up to seven or more daily samples, could average out peak toxic concentrations and therefore the discharge's potential for causing acute toxic effects would be missed." (TSD, pg. 96) This Order uses MDELs in lieu of AWELs for ammonia, diazinon and chlorpyrifos, and selenium as recommended by the TSD for the achievement of water quality standards and for the protection of the beneficial uses of the receiving stream. Furthermore, for BOD_5, pH, and TSS, AWELs have been replaced or supplemented with effluent limitations utilizing shorter averaging periods. The rationale for using shorter averaging periods for these constituents is discussed in section IV.C.3 of this Fact Sheet.

3. Satisfaction of Anti-Backsliding Requirements

The Clean Water Act specifies that a revised permit may not include effluent limitations that are less stringent than the previous permit unless a less stringent limitation is justified based on exceptions to the anti-backsliding provisions contained in Clean Water Act sections 402(o) or 303(d)(4), or, where applicable, 40 CFR 122.44(l).

The effluent limitations in this Order are at least as stringent as the effluent limitations in Order R5-2009-0010, with the exception of effluent limitations for ammonia. The AMEL for ammonia is less stringent than that in Order R5-2009-0010. This relaxation of effluent limitations is consistent with the anti-backsliding requirements of the CWA and federal regulations.

a. **CWA section 402(o)(1) and 303(d)(4).** CWA section 402(o)(1) prohibits the establishment of less stringent water quality-based effluent limits "*except in compliance with Section 303(d)(4)*." CWA section 303(d)(4) has two parts: paragraph (A) which applies to nonattainment waters and paragraph (B) which applies to attainment waters.

   i. For waters where standards are not attained, CWA section 304(d)(4)(A) specifies that any effluent limit based on a TMDL or other WLA may be revised only if the cumulative effect of all such revised effluent limits based on such TMDLs or WLAs will assure the attainment of such water quality standards.

   ii. For attainment waters, CWA section 303(d)(4)(B) specifies that a limitation based on a water quality standard may be relaxed where the action is consistent with the antidegradation policy.

   Tule Canal is considered an attainment water for ammonia because the receiving water is not listed as impaired on the 303(d) list for this constituent[1]. As discussed in section IV.D.4, below, relaxation in the effluent limits complies with federal and state antidegradation requirements. Thus, relaxation of the AMEL for ammonia from Order R5-2009-0010 meets the exception in CWA section 303(d)(4)(B).

b. **CWA section 402(o)(2).** CWA section 402(o)(2) provides several exceptions to the anti-backsliding regulations. CWA 402(o)(2)(B)(i) allows a renewed, reissued, or modified permit to contain a less stringent effluent limitation for a pollutant if information is available which was not available at the time of permit issuance (other than revised regulations, guidance, or test methods) and which would have justified the application of a less stringent effluent limitation at the time of permit issuance.

[1] "*The exceptions in Section 303(d)(4) address both waters in attainment with water quality standards and those not in attainment, i.e. waters on the section 303(d) impaired waters list*." State Water Board Order WQ 2008-0006, Berry Petroleum Company, Poso Creek/McVan Facility.

As described further in section IV.C.3.b of this Fact Sheet, updated information that was not available at the time Order R5-2009-0010 was issued indicates that a less stringent AMEL for ammonia, which satisfies requirements in CWA section 402(o)(2). The updated information that supports the relaxation of effluent limitations for ammonia includes the following:

i. **Ammonia.** Order R5-2009-0010 included effluent limitations based on the 1999 NAWQC for the protection of freshwater aquatic life for total ammonia to interpret the Basin Plan's narrative toxicity objective. In April 2013, U.S. EPA finalized the updated nationally applicable ammonia criteria based on the latest toxicity information for freshwater species, including unionid mussels and gill-breathing snails. This Order includes effluent limitations for ammonia based on the updated 2013 NAWQC (assuming mussels absent) calculated using updated downstream pH and temperature data collected between January 2011 and December 2013.

Thus, relaxation of the effluent limitations for ammonia from Order R5-2009-0010 is in accordance with CWA section 402(o)(2)(B)(i), which allows for the relaxation of effluent limitations based on information that was not available at the time of permit issuance.

c. **Selenium.** For selenium, the AMEL has changed from the previous Order. However, the effluent limit is not less stringent. In this case, the waste load allocations (WLA) in this Order and the previous Order are identical. The WLA provides a definition of effluent quality that is necessary to meet the water quality standards of the receiving water and is used to derive WQBELs that are used to enforce the WLA.

The TSD warns that, "*Direct use of a WLA as a permit limit creates a significant risk that the WLA will be enforced incorrectly, since effluent variability and the probability basis for the limit are not considered specifically*." (TSD, p. 96) The SIP and TSD include identical procedures for calculating WQBELs that use the statistical variability of the effluent to convert the WLA to AMELs and MDELs.

The new effluent data used to calculate WQBELs for this Order has different statistical variability (i.e., coefficient of variation is different) than used in the previous Order. The coefficient of variation depends on the number of data points and how the data is dispersed within the dataset. The coefficient of variation is determined for the standard deviation and mean of the dataset. Changes in the coefficient of variation can result in small changes to the effluent limits. However, the slight changes in effluent limits do not allow for an increase in the pollutants discharged. The TSD states, "*Since effluents are variable and permit limits are developed based on a low probability of exceedence, the permit limits should consider effluent variability and ensure that the requisite loading from the WLA is not exceeded under normal conditions. In effect then, the limits must "force" treatment plant performance, which, after considering acceptable effluent variability, will only have a low statistical probability of exceeding the WLA and will achieve the desired loadings*." (TSD, p. 97) Therefore, although there are slight differences in the effluent limit, the WLA is identical, so the level of treatment needed to maintain compliance with the effluent limit remains the same. Consequently, the effluent limit is not less stringent than the previous Order, and there is no backsliding.

The statistical variability is apparent when comparing the dataset from the previous Order to the dataset from the new Order. WQBELs for selenium in the previous Order R5-2009-0010 were calculated from 14 samples collected between June

2006 and December 2007, and the MEC was 32 µg/L. WQBELs for selenium in this Order were calculated based on 243 monitoring samples collected between January 2011 and December 2013, with an MEC of 7.9 µg/L, which is representative of current treatment plant performance. Therefore, Central Valley Water Board staff considers the effluent data collected between January 2011 and December 2013 to be the most representative and reliable dataset to use to determine current Facility performance and development of WQBELs.

The AMEL for selenium in this Order was calculated as a higher value than in previous Order R5-2009-0010. However, the MDEL was calculated as a more stringent value. The WQBELs in both Orders are based on the same WLA (i.e., the WLA is based on the CTR aquatic life criterion for selenium). The reason for the change in the AMEL and MDEL is due to a change in the variability of the effluent data for selenium. The WQBELs, however, are equally protective of the beneficial uses. The level of treatment needed to maintain compliance with the effluent limits remains the same. Consequently, the effluent limits are not less stringent than the previous permit, and there is no backsliding.

4. Antidegradation Policies

a. **Surface Water.** This Order does not allow for an increase in flow or mass of pollutants to the receiving water. Therefore, a complete antidegradation analysis is not necessary. The Order requires compliance with applicable federal technology-based standards and with WQBELs where the discharge could have the reasonable potential to cause or contribute to an exceedance of water quality standards. The permitted discharge is consistent with the antidegradation provisions of 40 CFR 131.12 and State Water Board Resolution No. 68-16. Compliance with these requirements will result in the use of best practicable treatment or control of the discharge. The impact on existing water quality will be insignificant.

This Order relaxes existing effluent limitations for ammonia based on updated pH and temperature data used to calculate the applicable NAWQC criterion for the protection of aquatic life. The relaxation of WQBELs for ammonia will not result in an increase in pollutant concentration or loading, a decrease in the level of treatment or control, or a reduction of water quality. Therefore, the Central Valley Water Board finds that the relaxation of the effluent limitations does not result in an allowed increase in pollutants or any additional degradation of the receiving water. Thus, the removal and relaxation of effluent limitations is consistent with the antidegradation provisions of 40 CFR 131.12 and State Water Board Resolution No. 68 16.

b. **Groundwater.** The Discharger utilizes the Erskine Pond for flow equalization, south ponds 9, 10, and 11 for sludge treatment, and the remaining 9 south ponds for odor control. Domestic wastewater contains constituents such as total dissolved solids, EC, pathogens, nitrates, organics, metals, and oxygen demanding substances. Percolation from the ponds may result in an increase in the concentration of these constituents in groundwater. The increase in the concentration of these constituents in groundwater must be consistent with Resolution No. 68-16. Any increase in pollutant concentrations in groundwater must be shown to be necessary to allow wastewater utility service, necessary to accommodate housing and economic expansion in the area, and must be consistent with maximum benefit to the people of the State of California. Some degradation of groundwater by the Discharger is consistent with Resolution No. 68-16 provided that:

i. the degradation is limited in extent;

ii. the degradation after effective source control, treatment, and control is limited to waste constituents typically encountered in municipal wastewater as specified in the groundwater limitations in this Order;

iii. the Discharger minimizes the degradation by fully implementing, regularly maintaining, and optimally operating best practicable treatment and control measures; and

iv. the degradation does not result in water quality less than that prescribed in the Basin Plan.

Groundwater monitoring results, submitted as part of the Report of Waste Discharge, show that chloride, total dissolved solids, EC, boron, and sodium concentrations have increased when compared to background. However, the new surface water supply is expected to reduce further impacts to groundwater. Furthermore, implementing best practicable treatment and control measures, the Discharger is treating the bottoms of the sludge stabilization ponds with a lime and cement mixture that will reduce permeability. The sludge stabilization pond bottoms will be treated by 1 December 2015 (see section VI.C.2.d. of this Order). The Discharger is required to prepare and submit a groundwater EC trend analysis report and subsequent annual updates (see section VI.C.2.c. of this Order). The intent of the continued groundwater monitoring and trend analyses is to provide enough information at the end of this permit term for Central Valley Water Board staff to determine whether the groundwater has improved due to the new surface water supply. Additionally, continued monitoring provides new information for staff to evaluate the effects of the new surface water supply on other constituents in the groundwater.

5. Stringency of Requirements for Individual Pollutants

This Order contains both technology-based effluent limitations and WQBELs for individual pollutants. The technology-based effluent limitations consist of restrictions on flow and percent removal requirements for BOD_5 and TSS. Restrictions on these parameters are discussed in section IV.B.2 of this Fact Sheet. This Order's technology-based pollutant restrictions implement the minimum, applicable federal technology-based requirements. In addition, this Order contains effluent limitations more stringent than the minimum, federal technology-based requirements that are necessary to meet water quality standards.

WQBELs have been derived to implement water quality objectives that protect beneficial uses. Both the beneficial uses and the water quality objectives have been approved pursuant to federal law and are the applicable federal water quality standards. To the extent that toxic pollutant water quality-based effluent limitations were derived from the CTR, the CTR is the applicable standard pursuant to 40 C.F.R. section 131.38. The procedures for calculating the individual water quality-based effluent limitations for priority pollutants are based on the CTR implemented by the SIP, which was approved by U.S. EPA on 18 May 2000. All beneficial uses and water quality objectives contained in the Basin Plan were approved under state law and submitted to and approved by U.S. EPA prior to 30 May 2000. Any water quality objectives and beneficial uses submitted to U.S. EPA prior to 30 May 2000, but not approved by U.S. EPA before that date, are nonetheless "*applicable water quality standards for purposes of the CWA*" pursuant to 40 C.F.R. section 131.21(c)(1). Collectively, this Order's restrictions on individual pollutants are no more stringent than required to implement the requirements of the CWA.

Summary of Final Effluent Limitations
Discharge Point 001

Table F-15. Summary of Final Effluent Limitations

Parameter	Units	Effluent Limitations					Basis[1]
		Average Monthly	Average Weekly	Maximum Daily	Instantaneous Minimum	Instantaneous Maximum	
Average Dry Weather Flow	MGD	10.4[2]	--	--	--	--	DC
Conventional Pollutants							
Biochemical Oxygen Demand (5-day @ 20°C)	mg/L	10	15	20	--	--	TTC
	lbs/day[3]	867	1,301	1,735	--	--	
	% Removal	85	--	--	--	--	CFR
pH	standard units	--	--	--	6.5	8.5	BP
Total Suspended Solids	mg/L	10	15	20	--	--	TTC
	lbs/day[3]	867	1,301	1,735	--	--	
	% Removal	85	--	--	--	--	CFR
Priority Pollutants							
Selenium, Total Recoverable	µg/L	4.4	--	7.3	--	--	CTR
	lbs/day[3]	0.39	--	0.64	--	--	
Non-Conventional Pollutants							
Ammonia Nitrogen Total (as N)	mg/L	1.1	--	2.1	--	--	NAWQC
	lbs/day[3]	95	--	180	--	--	
Boron, Total Recoverable	mg/L	1.5[4]	--	--	--	--	SSO
Diazinon and Chlorpyrifos	µg/L	[5,6]	--	[5,7]	--	--	TMDL
Electrical Conductivity	µmhos/cm	1,400[4]	--	--	--	--	SSO
Methylmercury	grams/ year	--	--	0.43[8]	--	--	TMDL
Total Coliform Organisms	MPN/ 100 mL	--	2.2[9]	23[10]	--	240	Title 22
Acute Toxicity	% Survival	70[11]/90[12]	--	--	--	--	BP
Chronic Toxicity	TUc	--	--	Narrative[13]	--	--	BP

Parameter	Units	Effluent Limitations					Basis[1]
		Average Monthly	Average Weekly	Maximum Daily	Instantaneous Minimum	Instantaneous Maximum	

[1] DC – Based on the design capacity of the Facility.
TTC – Based on tertiary treatment capability. These effluent limitations reflect the capability of a properly operated tertiary treatment plant.
CFR – Based on secondary treatment standards contained in 40 CFR Part 133.
BP – Based on water quality objectives contained in the Basin Plan.
CTR – Based on water quality criteria contained in the California Toxics Rule and applied as specified in the SIP.
NAWQC – Based on U.S. EPA's National Ambient Water Quality Criteria for the protection of freshwater aquatic life.
SSO – Based on the site-specific objective for protection of the agricultural beneficial use.
TMDL – Based on the applicable TMDL.
Title 22 – Based on CA Department of Public Health Reclamation Criteria, CCR, Division 4, Chapter 3 (Title 22).

[2] The average dry weather flow shall not exceed 10.4 MGD.

[3] Based on a design average dry weather flow of 10.4 MGD.

[4] Applied as an annual average effluent limitation.

[5] Applicable only during periods when the Yolo Bypass is flooded.

[6] Average Monthly Effluent Limitation

$$S_{avg} = \frac{C_{D_avg}}{0.079} + \frac{C_{C_avg}}{0.012} \leq 1.0$$

$C_{D\ avg}$ = average monthly diazinon effluent concentration in µg/L
$C_{C\ avg}$ = average monthly chlorpyrifos effluent concentration in µg/L

[7] Maximum Daily Effluent Limitation

$$S_{max} = \frac{C_{D_max}}{0.16} + \frac{C_{C_max}}{0.025} \leq 1.0$$

$C_{D\ avg}$ = maximum daily diazinon effluent concentration in µg/L
$C_{C\ avg}$ = maximum daily chlorpyrifos effluent concentration in µg/L

[8] The total calendar year annual load of methylmercury shall not exceed 0.43 grams.

[9] Applied as a 7-day median effluent limitation.

[10] Not to be exceeded more than once in any 30-day period.

[11] 70% minimum of any one bioassay.

[12] 90% median for any three consecutive bioassays.

[13] There shall be no chronic toxicity in the effluent discharge.

E. Interim Effluent Limitations

The State Water Board's Resolution 2008-0025 "*Policy for Compliance Schedules in National Pollutant Discharge Elimination System Permits*" (Compliance Schedule Policy) requires the Central Valley Water Board to establish interim numeric effluent limitations in this Order for compliance schedules longer than one year. As discussed in section VI.B.7 of this Fact Sheet, the Central Valley Water Board is approving a compliance schedule longer than one year for boron, EC, and methylmercury. The Compliance Schedule Policy requires that interim effluent limitations must be based on current treatment plant performance or existing permit limitations, whichever is more stringent. The interim effluent limitations for boron, EC, and mercury are based on the effluent limitations in Order R5-2009-0010.

1. **Compliance Schedules for Methylmercury, Boron, and EC.** This Order contains a new final effluent limitation for methylmercury based on the new objective that became effective on 20 October 2011. This Order includes new final effluent limitations for boron and EC based the narrative chemical constituent objective necessary to protect agricultural beneficial uses in Tule Canal. The Discharger has complied with the application requirements in paragraph 4 of the State Water Board's Compliance

Schedule Policy, and the Discharger's application demonstrates the need for additional time to implement actions to comply with the new limitations, as described below. Therefore, compliance schedules for compliance with the effluent limitations for methylmercury, boron, and EC are established in the Order.

A compliance schedule for methylmercury is necessary because the Discharger must implement actions, including a Phase 1 Methylmercury Control Study and possible upgrades to the Facility, to comply with final effluent limitations. Compliance schedules for boron and EC are necessary because the Discharger must implement actions, including construction of a new regional surface water supply to improve the municipal water supply, to comply with the more stringent permit limitations.

The Discharger has made diligent efforts to quantify pollutant levels in the discharge and the sources of the pollutant in the waste stream. The Discharger has collected routine monitoring for mercury (monthly), boron (semi-annually), and EC (three times per week). The primary source of boron and EC in the effluent is the Discharger's water supply.

The compliance schedules are as short as possible. The Central Valley Water Board will use the Phase 1 Control Studies' results and other information to consider amendments to the Delta Mercury Control Program during the Phase 1 Delta Mercury Control Program Review. Therefore, at this time it is uncertain what measures must be taken to consistently comply with the waste load allocation for methylmercury. The interim effluent limits and final compliance date may be modified at the completion of Phase 1. The Discharger needs time to construct the new surface water treatment plant to achieve compliance with the effluent limitations for boron and EC, and the compliance schedules and interim milestones in this Order are as short as possible given the type of facilities being constructed and industry experience with the time typically required to construct similar facilities.

Interim performance-based limitations have been established in this Order. The interim limitations were determined as described in section IV.E.2., below, and are in effect until the final limitations take effect. The interim numeric effluent limitations and source control measures will result in the highest discharge quality that can reasonably be achieved until final compliance is attained.

2. **Interim Limits for Boron, EC, and Methylmercury.** The Compliance Schedule Policy requires the Central Valley Water Board to establish interim requirements and dates for their achievement in the NPDES permit. Interim numeric effluent limitations are required for compliance schedules longer than 1 year. Interim effluent limitations must be based on current treatment plant performance or previous final permit limitations, whichever is more stringent. When feasible, interim limitations must correspond with final permit effluent limitations with respect to averaging bases (e.g., AMEL, MDEL, etc.) for effluent limitations for which compliance protection is intended.

   The interim limitations for boron, mercury, and EC in this Order are based on the effluent limitations established in Order R5-2009-0010, which were based on treatment plant performance.

   For mercury, the Delta Mercury Control Program requires POTWs to limit their discharges of inorganic (total) mercury to Facility performance-based levels during Phase 1. The interim inorganic (total) mercury effluent mass limit is to be derived using current, representative data and shall not exceed the 99.9th percentile of the 12-month running effluent inorganic (total) mercury mass loads. At the end of Phase 1, the interim inorganic (total) mercury mass limit will be re-evaluated and modified as appropriate. The Delta Mercury Control Program also requires interim limits established during

Phase 1 and allocations will not be reduced as a result of early actions that result in reduced inorganic (total) mercury and/or methylmercury in discharges. This Order includes a performance-based limit of 481 grams/year, derive from the existing mass loading limitation, as follows:

0.088 lbs/month * 12 months/year * 454 grams/lb = 481 grams/year

The Central Valley Water Board finds that the Discharger can undertake source control and treatment plant measures to maintain compliance with the interim limitations included in this Order. Interim limitations are established when compliance with final effluent limitations cannot be achieved by the existing discharge. Discharge of constituents in concentrations in excess of the final effluent limitations, but in compliance with the interim effluent limitations, can significantly degrade water quality and adversely affect the beneficial uses of the receiving stream on a long-term basis. The interim limitations, however, establish an enforceable ceiling concentration until compliance with the effluent limitation can be achieved.

The following table summarizes the interim effluent limitations for boron, EC, and mercury:

Table F-16. Interim Effluent Limitation Calculation Summary

Parameter	Units	Annual Average Effluent Limitation
Boron, Total Recoverable	mg/L	3.1
Electrical Conductivity	µmhos/cm	1,835
Mercury, Total Recoverable	grams/year	481

F. Land Discharge Specifications – Not Applicable

G. Recycling Specifications – Not Applicable

V. RATIONALE FOR RECEIVING WATER LIMITATIONS

A. Surface Water

1. CWA section 303(a-c), requires states to adopt water quality standards, including criteria where they are necessary to protect beneficial uses. The Central Valley Water Board adopted water quality criteria as water quality objectives in the Basin Plan. The Basin Plan states that "[t]*he numerical and narrative water quality objectives define the least stringent standards that the Regional Water Board will apply to regional waters in order to protect the beneficial uses.*" The Basin Plan includes numeric and narrative water quality objectives for various beneficial uses and water bodies. This Order contains receiving surface water limitations based on the Basin Plan numerical and narrative water quality objectives for bacteria, biostimulatory substances, color, chemical constituents, dissolved oxygen, floating material, oil and grease, pH, pesticides, radioactivity, suspended sediment, settleable substances, suspended material, tastes and odors, temperature, toxicity, and turbidity.

   a. **pH.** Order R5-2009-0010 established a receiving water limitation for pH specifying that discharges from the Facility shall not cause the ambient pH to change by more than 0.5 units based on the water quality objective for pH in the Basin Plan. The Central Valley Water Board adopted Resolution R5-2007-0136 on 25 October 2007, amending the Basin Plan to delete the portion of the pH water quality objective that limits the change in pH to 0.5 units and the allowance of averaging periods for pH. The Basin Plan amendment has been approved by the State Water Board, the Office of Administrative Law, and U.S. EPA. Consistent with the revised water

quality objective in the Basin Plan, this Order does not require a receiving water limitation for pH change.

In Finding No. 14 of Resolution R5-2007-0136 the Central Valley Water Board found that the change in the pH receiving water objective is consistent with the State Water Board Resolution No. 68-16, in that the changes to water quality objectives (i) consider maximum benefit to the people of the State, (ii) will not unreasonably affect present and anticipated beneficial use of waters, and (iii) will not result in water quality less than that prescribed in policies, and is consistent with the federal Antidegradation Policy (40 CFR 131.12).

Ammonia is the only constituent in the discharge regulated by this Order directly related to pH. The fixed ammonia effluent limitations in this Order are based on reasonable worse-case conditions. Although ammonia criteria are based on pH, and the pH receiving water limitations are more lenient in this Order than in the previous permit, the fixed ammonia limits are developed to protect under worse-case pH conditions. Therefore the relaxation of the pH receiving water limitation will protect aquatic life and other beneficial uses and will not unreasonably affect present and anticipated beneficial uses nor result in water quality less than described in applicable policies. The relaxation of the receiving water limitation is not expected to cause other impacts on water quality. The Central Valley Water Board finds that the relaxation of the pH receiving water limitation (i) is to the maximum benefit to the people of the State, (ii) will not unreasonably affect present and anticipated beneficial use of waters, and (iii) will not result in water quality less than that prescribed in policies, and is consistent with the federal Antidegradation Policy (40 CFR 131.12).

The revised receiving water limitation for pH, which is based on the amendment to the Basin Plan's pH water quality objective, reflects current scientifically supported pH requirements for the protection of aquatic life and other beneficial uses. The revised receiving water limitation for pH is more consistent with the current U.S. EPA recommended criteria and is fully protective of aquatic life and the other beneficial uses listed in the Basin Plan. Changes in pH when pH is maintained within the range of 6.5 to 8.5 are neither beneficial nor adverse and, therefore, are not considered to be degradation in water quality. Attempting to restrict pH changes to 0.5 pH units would incur substantial costs without demonstrable benefits to beneficial uses. Thus, any changes in pH that would occur under the revised pH limitation would not only be protective of beneficial uses, but also would be consistent with maximum benefit to people of the State. Therefore the proposed amendment will not violate antidegradation policies.

b. **Turbidity.** Order R5-2009-0010 established a receiving water limitation for turbidity specifying that discharges from the Facility shall not cause the turbidity to increase more than 1 NTU where natural turbidity is between 0 and 5 NTU based on the water quality objective for turbidity in the Basin Plan. The Central Valley Water Board adopted Resolution R5-2007-0136 on 25 October 2007, amending the Basin Plan to limit turbidity to 2 NTU when the natural turbidity is less than 1 NTU. The Basin Plan amendment has been approved by the State Water Board, the Office of Administrative Law, and U.S. EPA. Consistent with the revised water quality objective in the Basin Plan, this Order limits turbidity to 2 NTU when the natural turbidity is less than 1 NTU.

In Finding No. 14 of Resolution R5-2007-0136 the Central Valley Water Board found that the change in the turbidity receiving water objective is consistent with the State

Water Board Resolution No. 68-16, in that the changes to water quality objectives (i) consider maximum benefit to the people of the State, (ii) will not unreasonably affect present and anticipated beneficial use of waters, and (iii) will not result in water quality less than that prescribed in policies, and is consistent with the federal Antidegradation Policy (40 CFR 131.12).

This Order includes operational specifications that require the Discharger to operate the treatment system to insure that turbidity shall not exceed 2 NTU as a daily average, and 5 NTU more than 5 percent of the time within a 24 hour period, and 10 NTU, at any time. Because this Order limits the average daily discharge of turbidity to 2 NTU, the Order will be protective of the receiving water under all natural background conditions as defined in the Basin Plan's revised water quality objective for turbidity. The relaxation of the turbidity receiving water limitation will protect aquatic life and other beneficial uses and will not unreasonably affect present and anticipated beneficial uses nor result in water quality less than described in applicable policies. The relaxation of the receiving water limitation is not expected to cause other impacts on water quality. The Central Valley Water Board finds that the relaxation of the turbidity receiving water limitation (i) is to the maximum benefit to the people of the State, (ii) will not unreasonably affect present and anticipated beneficial use of waters, and (iii) will not result in water quality less than that prescribed in policies, and is consistent with the federal Antidegradation Policy (40 CFR 131.12).

The revised receiving water limitation for turbidity, which is based on the amendment to the Basin Plan's turbidity water quality objective, reflects current scientifically supported turbidity requirements for the protection of aquatic life and other beneficial uses and, therefore, will be fully protective of aquatic life and the other beneficial uses listed in the Basin Plan. Changes in turbidity allowed by the revised receiving water limitation, when ambient turbidity is below 1 NTU, would not adversely affect beneficial uses and would maintain water quality at a level higher than necessary to protect beneficial uses. Restricting low-level turbidity changes further may require costly upgrades, which would not provide any additional protection of beneficial uses. Thus, any changes in turbidity that would occur under the amended turbidity receiving water limitation would not only be protective of beneficial uses, but also would be consistent with maximum benefit to people of the State. Therefore, the relaxed receiving water limitations for turbidity will not violate antidegradation policies.

B. Groundwater

1. The beneficial uses of the underlying groundwater are municipal and domestic supply, industrial service supply, industrial process supply, and agricultural supply.

2. Basin Plan water quality objectives include narrative objectives for chemical constituents, tastes and odors, and toxicity of groundwater. The toxicity objective requires that groundwater be maintained free of toxic substances in concentrations that produce detrimental physiological responses in humans, plants, animals, or aquatic life. The chemical constituent objective states groundwater shall not contain chemical constituents in concentrations that adversely affect any beneficial use. The tastes and odors objective prohibits taste- or odor-producing substances in concentrations that cause nuisance or adversely affect beneficial uses. The Basin Plan also establishes numerical water quality objectives for chemical constituents and radioactivity in groundwaters designated as municipal supply. These include, at a minimum, compliance with MCLs in Title 22 of the CCR. The bacteria objective prohibits coliform organisms at or above 2.2

MPN/100 mL. The Basin Plan requires the application of the most stringent objective necessary to ensure that waters do not contain chemical constituents, toxic substances, radionuclides, taste- or odor-producing substances, or bacteria in concentrations that adversely affect municipal or domestic supply, agricultural supply, industrial supply or some other beneficial use.

3. Groundwater monitoring results, submitted as part of the Report of Waste Discharge, show that chloride, total dissolved solids, EC, boron, and sodium concentrations have increased when compared to background. However, the new surface water supply is expected to reduce further impacts to groundwater. Groundwater monitoring results in the down gradient wells do not show degradation of water quality for nitrate and total coliform organisms when compared to background. Therefore, numerical groundwater limitations are not included in this Order. This Order does include narrative groundwater limitations in section V.B.

VI. RATIONALE FOR PROVISIONS

A. Standard Provisions

Standard Provisions, which apply to all NPDES permits in accordance with 40 C.F.R. section 122.41, and additional conditions applicable to specified categories of permits in accordance with 40 C.F.R. section 122.42, are provided in Attachment D. The discharger must comply with all standard provisions and with those additional conditions that are applicable under section 122.42.

Sections 122.41(a)(1) and (b) through (n) of 40 C.F.R. establish conditions that apply to all state-issued NPDES permits. These conditions must be incorporated into the permits either expressly or by reference. If incorporated by reference, a specific citation to the regulations must be included in the Order. Section 123.25(a)(12) of 40 C.F.R. allows the state to omit or modify conditions to impose more stringent requirements. In accordance with 40 C.F.R. section 123.25, this Order omits federal conditions that address enforcement authority specified in 40 C.F.R. sections 122.41(j)(5) and (k)(2) because the enforcement authority under the Water Code is more stringent. In lieu of these conditions, this Order incorporates by reference Water Code section 13387(e).

B. Special Provisions

1. Reopener Provisions

a. **Mercury.** The Delta Mercury Control Program was designed to proceed in two phases. Phase 1 spans a period of approximately 9 years. Phase 1 emphasizes studies and pilot projects to develop and evaluate management practices to control methylmercury. At the end of Phase 1, the Central Valley Water Board will conduct a Phase 1 Delta Mercury Control Program Review that considers: modification of methylmercury goals, objectives, allocations and/or the Final Compliance Date; implementation of management practices and schedules for methylmercury controls; and adoption of a mercury offset program for dischargers who cannot meet their load and wasteload allocations after implementing all reasonable load reduction strategies. The fish tissue objectives, the linkage analysis between objectives and sources, and the attainability of the allocations will be re-evaluated based on the findings of Phase 1 control studies and other information. The linkage analysis, fish tissue objectives, allocations, and time schedules may be adjusted at the end of Phase 1, or subsequent program reviews, as appropriate. Therefore, this Order may be reopened to address changes to the Delta Mercury Control Program.

b. **Pollution Prevention Plan (PPP).** This Order requires the Discharger to prepare a pollution prevention plan (PPP) following Water Code section 13263.3(d)(3) for mercury. This reopener provision allows the Central Valley Water Board to reopen this Order for addition and/or modification of effluent limitations and requirements for mercury based on a review of the PPP.

c. **Whole Effluent Toxicity.** This Order requires the Discharger to investigate the causes of, and identify corrective actions to reduce or eliminate effluent toxicity through a TRE. This Order may be reopened to include a numeric chronic toxicity limitation, a new acute toxicity limitation, and/or a limitation for a specific toxicant identified in the TRE. Additionally, if a numeric chronic toxicity water quality objective is adopted by the State Water Board, this Order may be reopened to include a numeric chronic toxicity limitation based on that objective.

d. **Water Effects Ratio (WER) and Metal Translators.** A default WER of 1.0 has been used in this Order for calculating criteria for applicable inorganic constituents. In addition, default dissolved-to-total metal translators have been used to convert water quality objectives from dissolved to total recoverable. If the Discharger performs studies to determine site-specific WERs and/or site-specific dissolved-to-total metal translators, this Order may be reopened to modify the effluent limitations for the applicable inorganic constituents.

e. **Drinking Water Policy.** On 26 July 2013 the Central Valley Water Board adopted Resolution No. R5-2013-0098 amending the Basin Plan and establishing a Drinking Water Policy. The State Water Board approved the Drinking Water Policy on 3 December 2013. This Order may be reopened to incorporate monitoring of drinking water constituents to implement the Drinking Water Policy.

f. **Diazinon and Chlorpyrifos Basin Plan Amendment.** Central Valley Water Board staff is developing a Basin Plan Amendment to provide a chlorpyrifos and diazinon effluent limitation exemption if a discharger can demonstrate that diazinon and chlorpyrifos have not been detected in the effluent. The proposed Basin Plan Amendment may result in needed changes to the diazinon and chlorpyrifos requirements in this Order. Therefore, this Order may be reopened to modify diazinon and chlorpyrifos effluent limitations, as appropriate, in accordance with an amendment to the Basin Plan.

g. **Ultraviolet (UV) Disinfection Operating Specifications.** UV System operating specifications are required to ensure that the UV system is operated to achieve the required pathogen removal. UV disinfection system specifications and monitoring and reporting requirements are required to ensure that adequate UV dosage is applied to the wastewater to inactivate pathogens (e.g., viruses) in the wastewater. UV dosage is dependent on several factors such as UV transmittance, UV power setting, wastewater turbidity, and wastewater flow through the UV disinfection system. The UV specifications in this Order are based on the National Water Research Institute (NWRI) and American Water Works Association Research Foundation (AWWRF) *Ultraviolet Disinfection Guidelines for Drinking Water and Water Reuse"* first published in December 2000 and revised as a Third Edition dated August 2012 (NWRI Guidelines) and the design specifications of the Facility. If the Discharger conducts a site-specific UV engineering study that identifies alternative site-specific UV operating specifications that will achieve the virus inactivation required by Title 22 for disinfected tertiary recycled water, this Order may be reopened to modify the UV specifications.

h. **Effluent Limitations for BOD_5.** This Order establishes effluent limitations for BOD_5 based on the capabilities of a tertiary treatment plant, as described in section IV.C.3.b of this Fact Sheet. The Discharger is proposing to conduct a year-long study to analyze the correlation between BOD_5 and total organic carbon (TOC). Based on the study results, the Discharger may request future permit modifications to replace BOD_5 effluent limitations and monitoring requirements with TOC, as allowed under 40 CFR section 133.104. Based on the results of the study, this Order may be reopened to discontinue the effluent limitations and monitoring requirements for BOD_5 and establish effluent limitations and monitoring requirements for TOC.

2. Special Studies and Additional Monitoring Requirements

a. **Chronic Whole Effluent Toxicity Requirements.** The Basin Plan contains a narrative toxicity objective that states, "*All waters shall be maintained free of toxic substances in concentrations that produce detrimental physiological responses in human, plant, animal, or aquatic life*." (Basin Plan at page III-8.00). Based on whole effluent chronic toxicity testing performed by the Discharger from January 2011 through December 2013, the discharge has reasonable potential to cause or contribute to an in-stream excursion above of the Basin Plan's narrative toxicity objective.

This provision requires the Discharger to develop a TRE Workplan in accordance with U.S. EPA guidance. In addition, the provision provides a numeric toxicity monitoring trigger and requirements for accelerated monitoring, as well as, requirements for TRE initiation if toxicity has been demonstrated.

Monitoring Trigger. A numeric toxicity monitoring trigger of **> 1** TUc (where TUc = 100/NOEC) for *P. promelas* and *C. dubia* is applied in the provision, because this Order does not allow any dilution for the chronic condition. A numeric toxicity monitoring trigger of > 2 TUc for *S. capricornutum* is applied in the provision, as discussed further in section IV.C.5.b of this Fact Sheet. Therefore, a TRE is triggered when the effluent exhibits toxicity at 100% effluent for *P. promelas* and *C. dubia* and 50% effluent for *S. capricornutum.*

Accelerated Monitoring. The provision requires accelerated WET testing when a regular WET test result exceeds the monitoring trigger. The purpose of accelerated monitoring is to determine, in an expedient manner, whether there is toxicity before requiring the implementation of a TRE. Due to possible seasonality of the toxicity, the accelerated monitoring should be performed in a timely manner, preferably taking no more than 2 to 3 months to complete.

The provision requires accelerated monitoring consisting of four chronic toxicity tests in a six-week period (i.e., one test every two weeks) using the species that exhibited toxicity. Guidance regarding accelerated monitoring and TRE initiation is provided in the *Technical Support Document for Water Quality-based Toxics Control,* EPA/505/2-90-001, March 1991 (TSD). The TSD at page 118 states, "*EPA recommends if toxicity is repeatedly or periodically present at levels above effluent limits more than 20 percent of the time, a TRE should be required.*" Therefore, four accelerated monitoring tests are required in this provision. If no toxicity is demonstrated in the four accelerated tests, then it demonstrates that toxicity is not present at levels above the monitoring trigger more than 20 percent of the time (only 1 of 5 tests are toxic, including the initial test). However, notwithstanding the accelerated monitoring results, if there is adequate evidence of effluent toxicity

(i.e., toxicity present exceeding the monitoring trigger more than 20 percent of the time), the Executive Officer may require that the Discharger initiate a TRE.

See the WET Accelerated Monitoring Flow Chart (Figure F-1), below, for further clarification of the accelerated monitoring requirements and for the decision points for determining the need for TRE initiation.

TRE Guidance. The Discharger is required to prepare a TRE Workplan in accordance with U.S. EPA guidance. Numerous guidance documents are available, as identified below:

i. *Toxicity Reduction Evaluation Guidance for Municipal Wastewater Treatment Plants*, EPA/833-B-99/002, August 1999.

ii. *Generalized Methodology for Conducting Industrial Toxicity Reduction Evaluations (TREs)*, EPA/600/2-88/070, April 1989.

iii. *Methods for Aquatic Toxicity Identification Evaluations: Phase I Toxicity Characterization Procedures, Second Edition*, EPA 600/6-91/003, February 1991.

iv. *Toxicity Identification Evaluation: Characterization of Chronically Toxic Effluents, Phase I,* EPA/600/6-91/005F, May 1992.

v. *Methods for Aquatic Toxicity Identification Evaluations: Phase II Toxicity Identification Procedures for Samples Exhibiting Acute and Chronic Toxicity, Second Edition,* EPA/600/R-92/080, September 1993.

vi. *Methods for Aquatic Toxicity Identification Evaluations: Phase III Toxicity Confirmation Procedures for Samples Exhibiting Acute and Chronic Toxicity, Second Edition,* EPA 600/R-92/081, September 1993.

vii. *Methods for Measuring the Acute Toxicity of Effluents and Receiving Waters to Freshwater and Marine Organisms, Fifth Edition,* EPA-821-R-02-012, October 2002.

viii. *Short-term Methods for Estimating the Chronic Toxicity of Effluents and Receiving Waters to Freshwater Organisms, Fourth Edition,* EPA-821-R-02-013, October 2002.

ix. *Technical Support Document for Water Quality-based Toxics Control,* EPA/505/2-90-001, March 1991.

Figure F-1
WET Accelerated Monitoring Flow Chart

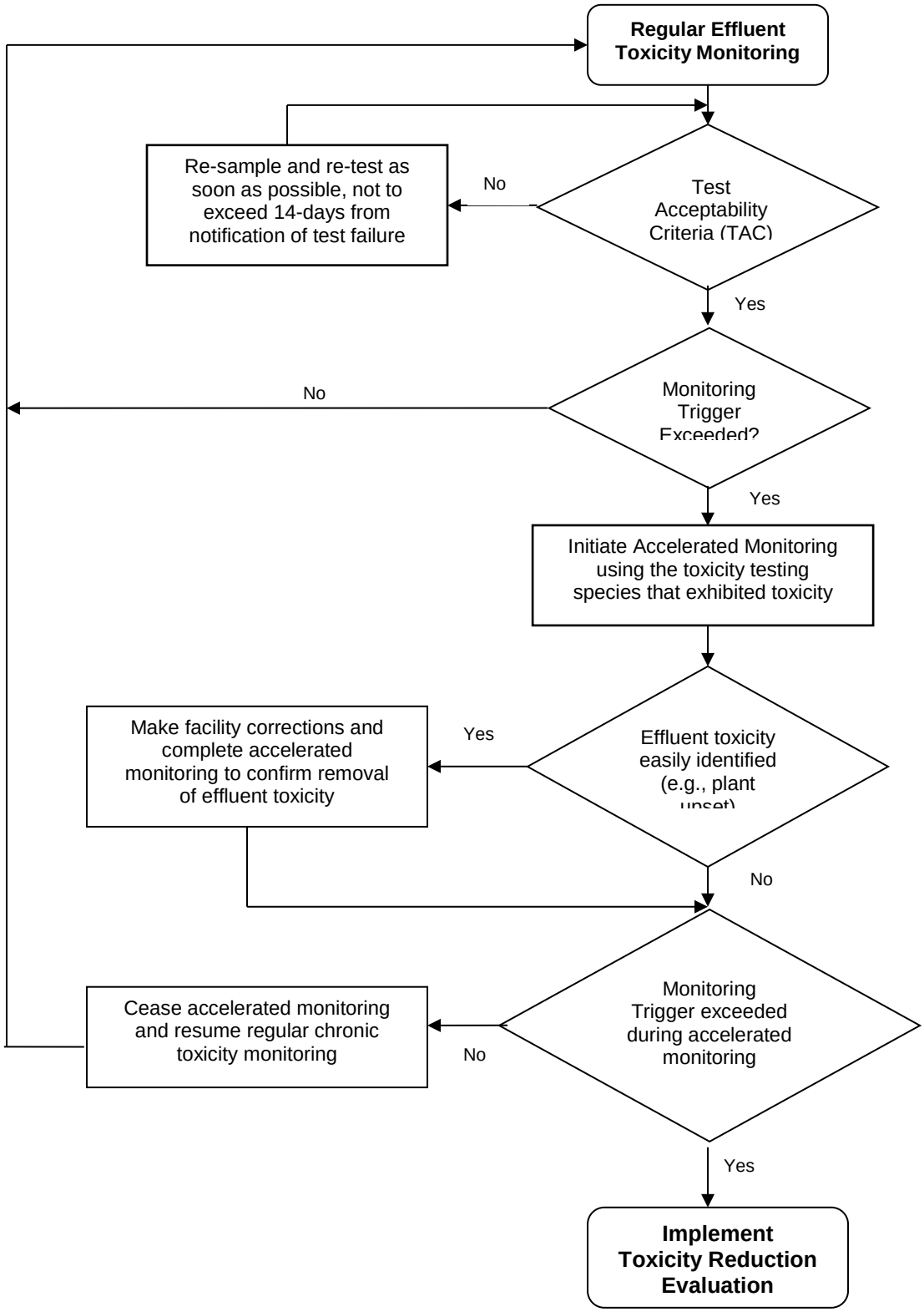

b. **Phase 1 Methylmercury Control Study.** The Basin Plan's Delta Mercury Control Program requires NPDES dischargers, working with other stakeholders, to conduct methylmercury control studies (Control Studies) to evaluate existing control methods and, as needed, develop additional control methods that could be implemented to achieve their methylmercury load and waste load allocations. Control studies can be developed through a stakeholder group approach or other collaborative mechanism, or by individual dischargers. The Discharger has agreed to participate in the Central Valley Clean Water Association (CVCWA) Coordinated Methylmercury Control Study (Study).

The Central Valley Water Board will use the Phase 1 Control Studies' results and other information to consider amendments to the Delta Mercury Control Program during the Phase 1 Delta Mercury Control Program Review. The objective of the Control Studies is to evaluate existing control methods and, as needed, develop additional control methods that could be implemented to achieve the methylmercury load and wasteload allocation. In accordance with the Delta Mercury Control Plan, a work plan was submitted on **20 April 2013** by CVCWA on behalf of a group of POTWs in the region. The Central Valley Water Board commits to supporting an adaptive management approach. The adaptive management approach includes the formation of a Stakeholder Group(s) and a Technical Advisory Committee (TAC).

The study work plan will be reviewed and approval by the TAC and subsequently approved by the Executive Officer. The Discharger shall immediately implement the work plan upon Executive Officer approval, and a progress report shall be submitted by **20 October 2015**.

The Study shall evaluate the feasibility of reducing sources more than the minimum amount needed to achieve the methylmercury allocation. The Study also may include an evaluation of innovative actions, watershed approaches, offsets projects, and other short and long-term actions that result in reducing inorganic (total) mercury and methylmercury to address the accumulation of methylmercury in fish tissue and to reduce methylmercury exposure. The Study may evaluate the effectiveness of using inorganic (total) mercury controls to control methylmercury discharges. The Study shall include a description of methylmercury and/or inorganic (total) mercury management practices identified in Phase 1; an evaluation of the effectiveness; and costs, potential environmental effects, and overall feasibility of the control actions. The Study shall also include proposed implementation plans and schedules to comply with methylmercury allocations as soon as possible. The Study shall be submitted by **20 October 2018**.

The Executive Officer may authorize extending the Study due date. The Executive Officer may, after public notice, extend the due date up to 2 years if the Discharger demonstrates it is making significant progress towards developing, implementing and/or completing the Study and reasonable attempts have been made to secure funding for the Study, but the Discharger has experienced severe budget shortfalls.

c. **Groundwater Monitoring and EC Evaluation.** The Discharger utilizes the Erskine Pond for flow equalization, south ponds 9, 10, and 11 for sludge treatment, and the remaining 9 south ponds for odor control. In 2012, the pond bottom in South Pond 11 was treated to reduce permeability. The bottom of South Pond 11 was treated with a lime and cement mixture that was compacted to a thickness of 12-inches. The Discharger will continue to line the remaining two sludge stabilization ponds after they are cleaned

Based on groundwater monitoring conducted during the term of Order R5-2009-0010, the down gradient monitoring wells (MW-2, MW-6, and MW-11) generally show an increase in chloride, total dissolved solids, EC, boron, and sodium when compared to the background wells. The conversion from the current groundwater supply to the new surface water supply during the term of this Order is expected to reduce the concentration of several constituents in the influent, and consequently in the effluent and underlying groundwater. Additionally, groundwater should improve when the sludge stabilization pond bottoms are treated with the lime and cement mixture, which will be completed by 1 December 2015.

Therefore, this Order requires the Discharger to conduct groundwater monitoring, EC trend analysis, and submit annual reports evaluating EC concentration trends in the groundwater. The intent of the continued groundwater monitoring and trend analyses is to provide enough information at the end of this permit term for Central Valley Water Board staff to determine whether groundwater limitations are warranted and whether continued groundwater monitoring is necessary.

3. Best Management Practices and Pollution Prevention

a. **Water Code Section 13263.3(d)(3) Pollution Prevention Plans.** A PPP for mercury is required in this Order per Water Code section 13263.3(d)(1)(C). The PPP shall, at a minimum, meet the requirements outlined in Water Code section 13263.3(d)(3). The minimum requirements for the PPP include the following:

i. An estimate of all of the sources of a pollutant contributing, or potentially contributing, to the loadings of a pollutant in the treatment plant influent.

ii. An analysis of the methods that could be used to prevent the discharge of the pollutants into the Facility, including application of local limits to industrial or commercial dischargers regarding pollution prevention techniques, public education and outreach, or other innovative and alternative approaches to reduce discharges of the pollutant to the Facility. The analysis also shall identify sources, or potential sources, not within the ability or authority of the Discharger to control, such as pollutants in the potable water supply, airborne pollutants, pharmaceuticals, or pesticides, and estimate the magnitude of those sources, to the extent feasible.

iii. An estimate of load reductions that may be attained through the methods identified in subparagraph ii.

iv. A plan for monitoring the results of the pollution prevention program.

v. A description of the tasks, cost, and time required to investigate and implement various elements in the pollution prevention plan.

vi. A statement of the Discharger's pollution prevention goals and strategies, including priorities for short-term and long-term action, and a description of the Discharger's intended pollution prevention activities for the immediate future.

vii. A description of the Discharger's existing pollution prevention programs.

viii. An analysis, to the extent feasible, of any adverse environmental impacts, including cross-media impacts or substitute chemicals that may result from the implementation of the pollution prevention program.

ix. An analysis, to the extent feasible, of the costs and benefits that may be incurred to implement the pollution prevention program.

b. **Mercury Exposure Reduction Program.** The Basin Plan's Delta Mercury Control Program requires dischargers to participate in a Mercury Exposure Reduction Program. The Exposure Reduction Program is needed to address public health impacts of mercury in Delta fish, including activities that reduce actual and potential exposure of and mitigate health impacts to those people and communities most likely to be affected by mercury in Delta caught fish, such as subsistence fishers and their families. The Exposure Reduction Program must include elements directed toward:

i. Developing and implementing community-driven activities to reduce mercury exposure;

ii. Raising awareness of fish contamination issues among people and communities most likely affected by mercury in Delta-caught fish such as subsistence fishers and their families;

iii. Integrating community-based organizations that serve Delta fish consumers, Delta fish consumers, tribes, and public health agencies in the design and implementation of an exposure reduction program;

iv. Identifying resources, as needed, for community-based organizations and tribes to participate in the Program;

v. Utilizing and expanding upon existing programs and materials or activities in place to reduce mercury, and as needed, create new materials or activities; and

vi. Developing measures for program effectiveness.

This Order requires the Discharger to participate in a Mercury Exposure Reduction Program (MERP) in accordance with the Delta Mercury Control Program. By letter dated 13 May 2013, the Discharger elected to provide financial support in the collective MERP with other Delta dischargers, rather than be individually responsible for any MERP activities. The objective of the Exposure Reduction Program is to reduce mercury exposure of Delta fish consumers most likely affected by mercury. The work plan shall address the Exposure Reduction Program objective, elements, and the Discharger's coordination with other stakeholders. The Discharger shall integrate or, at a minimum, provide good-faith opportunities for integration of community-based organizations, tribes, and consumers of Delta fish into planning, decision making, and implementation of exposure reduction activities. The Discharger shall continue to participate in the group effort to implement the work plan.

c. **Salinity Evaluation and Minimization Plan.** An Evaluation and Minimization Plan for salinity is required to be maintained in this Order to ensure adequate measures are developed and implemented by the Discharger to reduce the discharge of salinity to Tule Canal.

4. Construction, Operation, and Maintenance Specifications

a. **Filtration System Operating Specifications.** Turbidity is included as an operational specification as an indicator of the effectiveness of the filtration system for providing adequate disinfection. The tertiary treatment process utilized at this Facility is capable of reliably meeting a turbidity limitation of 2 NTU as a daily average. Failure of the treatment system such that virus removal is impaired would normally result in increased particles in the effluent, which result in higher effluent turbidity and could impact UV dosage. Turbidity has a major advantage for

monitoring filter performance, allowing immediate detection of filter failure and rapid corrective action. The operational specification requires that turbidity prior to disinfection shall not exceed 2 NTU as a daily average; 5 NTU, more than 5 percent of the time within a 24-hour period, and an instantaneous maximum of 10 NTU.

b. **Ultraviolet (UV) Disinfection System Operating Specifications.** This Order requires that wastewater shall be oxidized, coagulated, filtered, and adequately disinfected pursuant to the Department of Public Health (DPH) reclamation criteria, CCR, Title 22, division 4, chapter 3, (Title 22), or equivalent. To ensure that the UV disinfection system is operated to achieve the required pathogen removal, this Order includes effluent limits for total coliform organisms, filtration system operating specifications, and UV disinfection system operating specifications. Compliance with total coliform effluent limits alone does not ensure that pathogens in the municipal wastewater have been deactivated by the UV disinfection system. Compliance with the effluent limits and the Filtration System and UV disinfection operating specifications demonstrates compliance with the equivalency to Title 22 disinfection requirement.

The NWRI Guidelines include UV operating specifications for compliance with Title 22. For water recycling in accordance with Title 22, the UV system shall be an approved system included in the *Treatment Technology Report for Recycled Water*, December 2009 (or a later version, as applicable) published by the DPH. The UV system shall also conform to all requirements and operating specifications of the NWRI Guidelines. A Memorandum dated 1 November 2004 issued by DPH to Regional Water Board executive officers recommended that provisions be included in permits for water recycling treatment plants employing UV disinfection requiring dischargers to establish fixed cleaning frequency of lamp sleeves, as well as, include provisions that specify minimum delivered UV dose that must be maintained (per the NWRI Guidelines).

Order R5-2009-0010 included UV operating requirements based on the NWRI Guidelines (i.e., dose of 100 mJ/100 cm^2 and transmittance of 55% at 254 nm). However, the design dose of the UV system is 125 mJ/100 cm^2, and the Discharger indicated in a 6 January 2014 ROWD addendum that they have periodically had to operate the UV system at higher dose rates than assumed in design to achieve coliform kills. In a 21 June 2012 memorandum, the Discharger's consultant indicated that operating the UV system at the design dose of 125 mJ/cm^2 should be adequate to meet NPDES permit requirements for disinfection, and recommended that the Discharger continue to implement operational changes to reduce the mean cell residence time (MCRT), increase cleaning of the UV system, and increase cleaning of the filters. Therefore, in lieu of the UV dose requirements of the NWRI Guidelines, this Order includes an operating specification for a minimum hourly average UV dosage of 125 mJ/cm^2. If the Discharger conducts a site-specific UV engineering study that demonstrates a lower UV dose meets a Title 22 equivalent virus removal, this Order may be reopened to revise the UV operating specifications accordingly.

c. **Treatment Pond Operating Requirements.** Consistent with Order R5-2009-0010, this Order requires the operation and maintenance of the ponds to be conducted in a manner that prevents flooding and reduces nuisances.

5. Special Provisions for Municipal Facilities (POTWs Only)

a. **Pretreatment Requirements**

i. The federal CWA section 307(b), and federal regulations, 40 CFR Part 403, require POTWs to develop an acceptable industrial pretreatment program. A pretreatment program is required to prevent the introduction of pollutants, which will interfere with treatment plant operations or sludge disposal, and prevent pass through of pollutants that exceed water quality objectives, standards or permit limitations. Pretreatment requirements are imposed pursuant to 40 CFR Part 403.

ii. The Discharger has an approved pretreatment program. The Discharger's pretreatment program includes two noncategorical significant industrial users (SIU's) and approximately 170 other noncategorical nondomestic users (e.g., food service establishments and automotive maintenance facilities). The SIU's include PGP International, which makes food products from grain, and Woodland Biomass Power, Ltd., a congeneration plant.

iii. The Discharger shall implement and enforce its approved pretreatment program and is an enforceable condition of this Order. If the Discharger fails to perform the pretreatment functions, the Central Valley Water Board, the State Water Board or U.S. EPA may take enforcement actions against the Discharger as authorized by the CWA.

b. The State Water Board issued General Waste Discharge Requirements for Sanitary Sewer Systems, Water Quality Order 2006-0003-DWQ (General Order) on 2 May 2006. The Monitoring and Reporting Requirements for the General Order were amended by Water Quality Order WQ 2008-0002-EXEC on 20 February 2008. The General Order requires public agencies that own or operate sanitary sewer systems with greater than 1 mile of pipes or sewer lines to enroll for coverage under the General Order. The General Order requires agencies to develop sanitary sewer management plans (SSMPs) and report all sanitary sewer overflows (SSOs), among other requirements and prohibitions.

Furthermore, the General Order contains requirements for operation and maintenance of collection systems and for reporting and mitigating sanitary sewer overflows. Inasmuch that the Discharger's collection system is part of the system that is subject to this Order, certain standard provisions are applicable as specified in Provisions, section VI.C.5. For instance, the 24-hour reporting requirements in this Order are not included in the General Order. The Discharger must comply with both the General Order and this Order. The Discharger and public agencies that are discharging wastewater into the facility were required to obtain enrollment for regulation under the General Order by 1 December 2006.

6. Other Special Provisions

a. Consistent with Order R5-2009-0010, this Order requires wastewater to be oxidized, coagulated, filtered, and adequately disinfected pursuant to DPH reclamation criteria, CCR, Title 22, division 4, chapter 3 (Title 22), or equivalent.

7. Compliance Schedules

In general, an NPDES permit must include final effluent limitations that are consistent with CWA section 301 and with 40 C.F.R. section 122.44(d). There are exceptions to this general rule. The State Water Board's Resolution 2008-0025 "*Policy for Compliance Schedules in National Pollutant Discharge Elimination System Permits*" (Compliance

Schedule Policy) allows compliance schedules for new, revised, or newly interpreted water quality objectives or criteria, or in accordance with a TMDL. All compliance schedules must be as short as possible, and may not exceed 10 years from the effective date of the adoption, revision, or new interpretation of the applicable water quality objective or criterion, unless a TMDL allows a longer schedule. Where a compliance schedule for a final effluent limitation exceeds 1 year, the Order must include interim numeric effluent limitations for that constituent or parameter, interim requirements and dates toward achieving compliance, and compliance reporting within 14 days after each interim date. The Order may also include interim requirements to control the pollutant, such as pollutant minimization and source control measures.

In accordance with the Compliance Schedule Policy and 40 CFR 122.47, a Discharger who seeks a compliance schedule must demonstrate additional time is necessary to implement actions to comply with a more stringent permit limitation. The Discharger must provide the following documentation as part of the application requirements:

- Diligent efforts have been made to quantify pollutant levels in the discharge and the sources of the pollutant in the waste stream, and the results of those efforts;
- Source control efforts are currently underway or completed, including compliance with any pollution prevention programs that have established;
- A proposed schedule for additional source control measures or waste treatment;
- Data demonstrating current treatment facility performance to compare against existing permit effluent limits, as necessary to determine which is the more stringent interim, permit effluent limit to apply if a schedule of compliance is granted;
- The highest discharge quality that can reasonably be achieved until final compliance is attained;
- The proposed compliance schedule is as short as possible, given the type of facilities being constructed or programs being implemented, and industry experience with the time typically required to construct similar facilities or implement similar programs; and
- Additional information and analyses to be determined by the Regional Water Board on a case-by-case basis.

Based on information submitted with the infeasibility analyses, the ROWD, SMRs, and other miscellaneous submittals, it has been demonstrated to the satisfaction of the Central Valley Water Board that the Discharger needs time to implement actions to comply with the new effluent limitations for methylmercury, boron, and EC.

a. **Methylmercury.** The Delta Mercury Control Program is composed of two phases. Phase 1 spans from 20 October 2011 through the Phase I Delta Mercury Control Program Review, expected to conclude by October 2020. Phase 1 emphasizes studies and pilot projects to develop and evaluate management practices to control methylmercury. Phase 1 includes provisions for: implementing pollution minimization programs and interim mass limits for inorganic (total) mercury point sources in the Delta and Yolo Bypass; controlling sediment-bound mercury in the Delta and Yolo Bypass that may become methylated in agricultural lands, wetland, and open-water habitats; and reducing total mercury loading to San Francisco Bay, as required by the *Water Quality Control Plan for the San Francisco Bay Basin*.

   At the end of Phase 1, the Central Valley Water Board will conduct a Phase 1 Delta Mercury Control Program Review that considers: modification of methylmercury

goals, objectives, allocations and/or the Final Compliance Date; implementation of management practices and schedules for methylmercury controls; and adoption of a mercury offset program for dischargers who cannot meet their load and waste load allocations after implementing all reasonable load reduction strategies. The review also will consider other potential public and environmental benefits and negative impacts (e.g., habitat restoration, flood protection, water supply, fish consumption) of attaining the allocations. The fish tissue objectives, the linkage analysis between objectives and sources, and the attainability of the allocations will be re-evaluated based on the findings of Phase 1 control studies and other information. The linkage analysis, fish tissue objectives, allocations, and time schedules shall be adjusted at the end of Phase 1, or subsequent program reviews, if appropriate.

Phase 2 begins after the Phase 1 Delta Mercury Control Program Review or by 20 October 2022, whichever occurs first, and ends in 2030. During Phase 2, dischargers shall implement methylmercury control programs and continue inorganic (total) mercury reduction programs. Compliance monitoring and implementation of upstream control programs also shall occur in Phase 2. Any compliance schedule contained in an NPDES permit must be "... *an enforceable sequence of actions or operations leading to compliance with an effluent limitation*..." per the definition of a compliance schedule in CWA Section 502(17). See also 40 CFR 122.2 (definition of schedule of compliance). The compliance schedule for methylmercury meets these requirements.

Federal Regulations at 40 CFR 122.47(a)(1) requires that, " *Any schedules of compliance under this section shall require compliance as soon as possible* ..." The Compliance Schedule Policy also requires that compliance schedules are as short as possible and may not exceed 10 years, except when "... *a permit limitation that implements or is consistent with the waste load allocations specified in a TMDL that is established through a Basin Plan amendment, provided that the TMDL implementation plan contains a compliance schedule or implementation schedule*." As discussed above, the Basin Plan's Delta Mercury Control Program includes compliance schedule provisions and allows compliance with the waste load allocations for methylmercury by 2030. Until the Phase 1 Control Studies are complete and the Central Valley Water Board conducts the Phase 1 Delta Mercury Control Program Review, it is not possible to determine the appropriate compliance date for the Discharger that is as soon as possible. Therefore, this Order establishes a compliance schedule for the new, final WQBELs for methylmercury with full compliance required by 31 December 2030, which is consistent with the Final Compliance Date of the TMDL. At completion of the Phase 1 Delta Mercury Control Program Review, the final compliance date for this compliance schedule will be re-evaluated to ensure compliance is required as soon as possible. Considering the available information, the compliance schedule is as short as possible in accordance with federal regulations and the Compliance Schedule Policy.

b. **Boron and EC.** The Discharger has complied with the application requirements in paragraph 4 of the State Water Board's Compliance Schedule Policy and the Compliance Schedule for boron and EC meets the requirements of 40 CFR 122.47. In its request and justification for a compliance schedule for boron and EC the Discharger has demonstrated the need for additional time to implement actions to comply with the new final effluent limitations for boron and EC. In order to achieve compliance with the final effluent limitations for boron and EC, the Discharger is pursuing a regional surface water supply project to improve the municipal water supply through conjunctive use with the existing groundwater supply. The

compliance schedule in this Order includes milestones related to construction of new water intake facilities, water treatment facilities, and new conveyance facilities, which collectively constitute the surface water supply project. Considering the size of the project and that it is regional in nature, the surface water supply project is not readily divisible into various stages. Further, because the time between these milestones is over 1 year in length, the compliance schedule requires Annual Progress Reports. The Annual Progress Reports will include detail with respect to construction progress to demonstrate the plant is being constructed within the allotted time per the compliance schedule. The inclusion of Annual Progress Reports is consistent with the Compliance Schedule Policy and 40 CFR 122.47. The new surface water supply will improve the effluent water quality but may not provide enough improvement to meet the new final effluent limitation. The Discharger has therefore requested additional time to assess the improvement to effluent water quality achieved once the new water supply is in service. This assessment will be conducted over 1 calendar year in order to account for seasonal variations in municipal water use. After this assessment period, the Discharger will compare reductions in boron and EC with the final limitations. If additional steps are necessary, the Discharger will implement source control measures proposed in the Salinity Minimization and Evaluation Plan within 6 months. The Central Valley Water Board finds that this compliance schedule based on the current information is as short as possible. Thus, this Order includes the compliance schedule and final compliance date of 1 January 2021 and establishes new interim milestones to ensure that the Discharger continues to make progress towards achieving final compliance with the final effluent limitations by the final compliance date.

VII. RATIONALE FOR MONITORING AND REPORTING REQUIREMENTS

CWA section 308 and 40 C.F.R. sections 122.41(h), (j)-(l), 122.44(i), and 122.48 require~~s~~ that all NPDES permits specify monitoring and reporting requirements. Water Code sections 13267 and 13383 also authorize the Central Valley Water Board to establish monitoring, inspection, entry, reporting, and recordkeeping requirements. The Monitoring and Reporting Program, Attachment E of this Order~~,~~ establishes monitoring, reporting, and recordkeeping requirements that implement federal and state requirements. The following provides the rationale for the monitoring and reporting requirements contained in the Monitoring and Reporting Program for this Facility.

A. Influent Monitoring

1. Influent monitoring is required to collect data on the characteristics of the wastewater and to assess compliance with effluent limitations (e.g., BOD_5 and TSS reduction requirements). The monitoring frequencies for flow (continuous), BOD_5 (weekly), and TSS (weekly) have been retained from Order R5-2009-0010.
2. In order to characterize the contribution of salinity in the influent wastewater, this Order establishes weekly influent monitoring for EC.

B. Effluent Monitoring

1. Pursuant to the requirements of 40 CFR 122.44(i)(2) effluent monitoring is required for all constituents with effluent limitations. Effluent monitoring is necessary to assess compliance with effluent limitations, assess the effectiveness of the treatment process, and to assess the impacts of the discharge on the receiving stream and groundwater.
2. Effluent monitoring frequencies and sample types for flow (continuous), BOD_5 (three times per week), pH (three times per week), TSS (three times per week), mercury (monthly), selenium (monthly), ammonia (three times per week), boron (twice per year), chlorine (daily when in use), hardness (monthly), nitrate (monthly), temperature (three

times per week), and total dissolved solids (monthly) have been retained from Order R5-2009-0010 to determine compliance with effluent limitations, where applicable, and characterize the effluent for these parameters.

3. This Order includes effluent limitations for methylmercury, diazinon, and chlorpyrifos based on the applicable TMDLs for the Sacramento-San Joaquin Delta. This Order requires monthly monitoring for methylmercury and annual monitoring for diazinon and chlorpyrifos to characterize their presence in the effluent and determine compliance with the applicable effluent limitations based on the TMDL.

4. Order R5-2009-0010 required monitoring for turbidity continuously and total coliform organisms three times per week at Monitoring Location EFF-001. This Order retains the monitoring frequencies for turbidity and total coliform organisms, but moves the point of compliance from Monitoring Location EFF-001 to an internal compliance point following the filtration system and prior to the UV disinfection system for turbidity (Monitoring Location FIL-001) and following the UV disinfection system for total coliform organisms (Monitoring Location UVS-002).

5. Order R5-2009-0010 required effluent monitoring for EC three times per week. This Order reduces the monitoring frequency for EC to weekly. The Central Valley Water Board finds that this frequency is sufficient to determine compliance with the applicable effluent limitations and characterize the effluent.

6. As discussed in section IV.C.3.a of this Fact Sheet, bis (2-ethylhexyl) phthalate is a common contaminant of sample containers, sampling apparatus, and analytical equipment, and sources of detected bis (2-ethylhexyl) phthalate may be from plastics used for sampling or analytical equipment. Furthermore, monitoring data collected during the term of Order R5-2009-0010 did not utilize RLs that meet the required MLs from Appendix 4 of the SIP. Therefore, this Order establishes quarterly monitoring for bis (2-ethylhexyl) phthalate using clean techniques to verify if bis (2-ethylhexyl) phthalate is truly present in the effluent discharge and using an RL that meets the required SIP ML (i.e., 5 µg/L).

7. In accordance with Section 1.3 of the SIP, periodic monitoring is required for priority pollutants for which criteria or objectives apply and for which no effluent limitations have been established. This Order requires effluent monitoring for priority pollutants quarterly during the year 2018, after conversion to the regional surface water supply. See section IX.D of the Monitoring and Reporting Program (Attachment E) for more detailed requirements related to performing priority pollutant monitoring.

8. California Water Code section 13176, subdivision (a), states: "*The analysis of any material required by [Water Code sections 13000-16104] shall be performed by a laboratory that has accreditation or certification pursuant to Article 3 (commencing with Section 100825) of Chapter 4 of Part 1 of Division 101 of the Health and Safety Code*." DPH certifies laboratories through its Environmental Laboratory Accreditation Program (ELAP).

   Section 13176 cannot be interpreted in a manner that would violate federal holding time requirements that apply to NPDES permits pursuant to the Clean Water Act. (Wat. Code §§ 13370, subd. (c), 13372, 13377.) Section 13176 is inapplicable to NPDES permits to the extent it is inconsistent with Clean Water Act requirements. (Wat. Code § 13372, subd. (a).) The holding time requirements are 15 minutes for chlorine residual, dissolved oxygen, and pH, and immediate analysis is required for temperature. (40 C.F.R. § 136.3(e), Table II) The Discharger maintains an ELAP certified laboratory on-site and

conducts analysis for chlorine residual, dissolved oxygen, and pH within the required 15 minute hold times.

C. Whole Effluent Toxicity Testing Requirements

1. **Acute Toxicity.** Consistent with Order R5-2009-0010, quarterly 96-hour bioassay testing is required to demonstrate compliance with the effluent limitation for acute toxicity.

2. **Chronic Toxicity.** Consistent with Order R5-2009-0010, quarterly chronic whole effluent toxicity testing is required in order to demonstrate compliance with the Basin Plan's narrative toxicity objective.

D. Receiving Water Monitoring

1. Surface Water

a. Receiving water monitoring is necessary to assess compliance with receiving water limitations and to assess the impacts of the discharge on the receiving stream.

b. The receiving water monitoring frequency and sample type for pH (weekly), dissolved oxygen (weekly), hardness (monthly), and temperature (weekly) have been retained from Order R5-2009-0010.

c. The Discharger conducted weekly EC monitoring in the upstream and downstream receiving water during the term of Order R5-2009-0010, which was sufficient to characterize background concentrations. Thus, this Order discontinues upstream receiving water monitoring for EC. Downstream receiving water monitoring has been retained to evaluate the impact of the discharge on the receiving water.

d. Based on monitoring data collected during the term of Order R5-2009-0010, this Order discontinues receiving water monitoring for radionuclides, total coliform organism, and turbidity.

e. In accordance with Section 1.3 of the SIP, periodic monitoring for priority pollutants for which criteria or objectives apply and for which no effluent limitations have been established. This Order requires monitoring for priority pollutants and other pollutants of concern quarterly during the year 2018, concurrent with effluent monitoring, in order to collect data to conduct an RPA for the next permit renewal. See section IX.D of the Monitoring and Reporting Program (Attachment E) for more detailed requirements related to performing priority pollutant monitoring.

f. **Delta Regional Monitoring Program (RMP).** The Central Valley Water Board requires individual dischargers and discharger groups to conduct monitoring of Delta waters and Delta tributary waters in the vicinity of their discharge, known as ambient (or receiving) water quality monitoring. This monitoring provides information on the impacts of waste discharges on Delta waters, and on the extant condition of the Delta waters. However, the equivalent funds spent on current monitoring efforts could be used more efficiently and productively, and provide a better understanding of geographic and temporal distributions of contaminants and physical conditions in the Delta, and of other Delta water quality issues, if those funds were used for a coordinated ambient monitoring effort, rather than continue to be used in individual, uncoordinated ambient water quality monitoring programs. The Delta RMP will provide data to better inform management and policy decisions regarding the Delta.

This Order will allow Dischargers to elect to participate in the Delta RMP in lieu of conducting all or part of the individual receiving water monitoring required in the Monitoring and Reporting Program, Attachment E of this Order. If the Discharger elects to cease individual receiving water monitoring and participate in the Delta

RMP, the Discharger shall submit a letter signed by an authorized representative to the Executive Officer informing the Central Valley Water Board that the Discharger will participate in the Delta RMP and the date on which individual receiving water monitoring under Attachment E, Sections VIII.A.1 and VIII.A.3, will cease or be modified. Approval by the Executive Officer is not required.

Delta RMP data is not intended to be used directly to represent either upstream or downstream water quality for purposes of determining compliance with this Permit. Delta RMP monitoring stations are established generally as "integrator sites" to evaluate the combined impacts on water quality of multiple discharges into the Delta; Delta RMP monitoring stations would not normally be able to identify the source of any specific constituent, but would be used to identify water quality issues needing further evaluation. Delta RMP monitoring data may be used to help establish background receiving water quality for Reasonable Potential analyses in an NPDES Permit after evaluation of the applicability of the data for that purpose. In general, monitoring data from samples collected in the immediate vicinity of the discharge will be given greater weight in permitting decisions than receiving water monitoring data collected at greater distances from the discharge point. Delta RMP data, as with all environmental monitoring data, can provide an assessment of water quality at a specific place and time that can be used in conjunction with other information, such as other receiving water monitoring data, spatial and temporal distribution and trends of receiving water data, effluent data from the Discharger's discharge and other point and non-point source discharges, receiving water flow volume, speed and direction, and other information to determine the likely source or sources of a constituent that resulted in exceedance of a receiving water quality objective.

If the Discharger begins to participate in the Delta RMP in lieu of individual receiving water monitoring, the Discharger shall continue to participate in the Delta RMP until such time as the Discharger informs the Central Valley Water Board that participation in the Delta RMP will cease and individual monitoring is reinstituted. Receiving water monitoring under Attachment E, Sections VIII.A.1 and VIII.A.3, is not required under this Order so long as the Discharger adequately supports the Delta RMP. Participation in the Delta RMP by a Discharger shall consist of providing funds and/or in-kind services to the Delta RMP at least equivalent to discontinued individual monitoring and study efforts. If a discharger or discharger group fails to maintain adequate participation in the Delta RMP, as determined through criteria to be developed by the Delta RMP Steering Committee, the Steering Committee will recommend to the Central Valley Water Board that an individual monitoring program be reinstated for that discharger or discharger group.

If the Discharger is participating in the Delta RMP as described in Attachment E, Section VIII, the Receiving Water portion of the required Characterization Monitoring need not be conducted by the Discharger. Instead, data from the Delta RMP will be utilized to characterize the receiving water in the permit renewal. The Discharger may, however, conduct any site-specific receiving water monitoring deemed appropriate by the Discharger and submit that monitoring data with this Characterization Monitoring. In general, monitoring data from samples collected in the immediate vicinity of the discharge will be given greater weight in permitting decisions than receiving water monitoring data collected at greater distances from the discharge point. Historic receiving water monitoring data taken by the Discharger and from other sources may also be evaluated to determine whether or not that data is representative of current receiving water conditions. If found to be

representative of current conditions, then that historic data may be used in characterizing receiving water quality for the purposes of Reasonable Potential analysis.

2. Groundwater

a. Water Code section 13267 states, in part, "*(a) A Regional Water Board, in establishing…waste discharge requirements… may investigate the quality of any waters of the state within its region" and "(b) (1) In conducting an investigation…, the Regional Water Board may require that any person who… discharges… waste…that could affect the quality of waters within its region shall furnish, under penalty of perjury, technical or monitoring program reports which the Regional Water Board requires. The burden, including costs, of these reports shall bear a reasonable relationship to the need for the report and the benefits to be obtained from the reports*." The burden, including costs, of these reports shall bear a reasonable relationship to the need for the report and the benefits to be obtained from the reports. In requiring those reports, a Regional Water Board shall provide the person with a written explanation with regard to the need for the reports, and shall identify the evidence that supports requiring that person to provide the reports. The Monitoring and Reporting Program is issued pursuant to Water Code section 13267. The groundwater monitoring and reporting program required by this Order and the Monitoring and Reporting Program are necessary to assure compliance with these waste discharge requirements. The Discharger is responsible for the discharges of waste at the facility subject to this Order.

b. Monitoring of the groundwater must be conducted to determine if the discharge has caused an increase in constituent concentrations, when compared to background. The monitoring must, at a minimum, require a complete assessment of groundwater impacts including the vertical and lateral extent of degradation, an assessment of all wastewater-related constituents which may have migrated to groundwater, an analysis of whether additional or different methods of treatment or control of the discharge are necessary to provide best practicable treatment or control to comply with Resolution No. 68-16. Economic analysis is only one of many factors considered in determining best practicable treatment or control. If monitoring indicates that the discharge has incrementally increased constituent concentrations in groundwater above background, this permit may be reopened and modified. Until groundwater monitoring is sufficient, this Order contains Groundwater Limitations that allow groundwater quality to be degraded for certain constituents when compared to background groundwater quality, but not to exceed water quality objectives. If groundwater quality has been degraded by the discharge, the incremental change in pollutant concentration (when compared with background) may not be increased. If groundwater quality has been or may be degraded by the discharge, this Order may be reopened and specific numeric limitations established consistent with Resolution No. 68-16 and the Basin Plan.

c. This Order requires the Discharger to continue groundwater monitoring and includes a regular schedule of groundwater monitoring in the attached Monitoring and Reporting Program. The groundwater monitoring reports are necessary to evaluate impacts to waters of the State to assure protection of beneficial uses and compliance with Central Valley Water Board plans and policies, including Resolution No. 68-16. Evidence in the record includes effluent monitoring data that indicates the presence of constituents that may degrade groundwater and surface water.

E. Other Monitoring Requirements

1. **Pond Monitoring**

Treatment pond monitoring is required to ensure proper operation of the storage ponds. Monthly monitoring for freeboard, EC, color, odor, and levee condition has been retained from Order R5-2009-0010.

2. **Biosolids Monitoring**

Biosolids monitoring is required to ensure compliance with the biosolids disposal requirements contained in the Special Provision contained in section VI.C.5.b of this Order. Biosolids disposal requirements are imposed pursuant to 40 CFR Part 503 to protect public health and prevent groundwater degradation.

3. **Water Supply Monitoring**

Water supply monitoring is required to evaluate the source of constituents in the wastewater. Consistent with Order R5-2009-0010, this Order requires annual monitoring of boron, selenium, EC, and total dissolved solids. Water supply monitoring for mercury has been discontinued.

4. **UV Disinfection System Monitoring**

UV system monitoring and reporting are required to ensure that the UV system is operated to adequately inactivate pathogens in the wastewater. UV Disinfection system monitoring is imposed to achieve equivalency to requirements established by DPH, and the NWRI Guidelines.

VIII. PUBLIC PARTICIPATION

The Central Valley Water Board has considered the issuance of WDR's that will serve as an NPDES permit for the Facility. As a step in the WDR adoption process, the Central Valley Water Board staff has developed tentative WDR's and has encouraged public participation in the WDR adoption process.

A. Notification of Interested Parties

The Central Valley Water Board notified the Discharger and interested agencies and persons of its intent to prescribe WDR's for the discharge and provided an opportunity to submit written comments and recommendations. Notification was provided through publication in the Woodland Daily Democrat, posting on the Discharger's website, posting at the Woodland City Hall, posting at the Woodland Post Office, and posting on the Central Valley Water Board website.

The public had access to the agenda and any changes in dates and locations through the Central Valley Water Board's website at:
http://www.waterboards.ca.gov/centralvalley/board_info/meetings/

B. Written Comments

Interested persons were invited to submit written comments concerning tentative WDR's as provided through the notification process. Comments were due either in person or by mail to the Executive Office at the Central Valley Water Board at the address on the cover page of this Order.

To be fully responded to by staff and considered by the Central Valley Water Board, the written comments were due at the Central Valley Water Board office by 5:00 p.m. on 1 September 2014.

C. Public Hearing

The Central Valley Water Board held a public hearing on the tentative WDR's during its regular Board meeting on the following date and time and at the following location:

Date:	9/10 October 2014
Time:	TBD a.m.
Location:	Regional Water Quality Control Board, Central Valley Region 11020 Sun Center Dr., Suite #200 Rancho Cordova, CA 95670

Interested persons were invited to attend. At the public hearing, the Central Valley Water Board heard testimony pertinent to the discharge, WDR's, and permit. For accuracy of the record, important testimony was requested in writing.

D. Reconsideration of Waste Discharge Requirements

Any aggrieved person may petition the State Water Board to review the decision of the Central Valley Water Board regarding the final WDR's. The petition must be received by the State Water Board at the following address within 30 calendar days of the Central Valley Water Board's action:

State Water Resources Control Board
Office of Chief Counsel
P.O. Box 100, 1001 I Street
Sacramento, CA 95812-0100

For instructions on how to file a petition for review, see
http://www.waterboards.ca.gov/public_notices/petitions/water_quality/wqpetition_instr.shtml

E. Information and Copying

The Report of Waste Discharge, other supporting documents, and comments received are on file and may be inspected at the address above at any time between 8:30 a.m. and 4:45 p.m., Monday through Friday. Copying of documents may be arranged through the Central Valley Water Board by calling (916) 464-3291.

F. Register of Interested Persons

Any person interested in being placed on the mailing list for information regarding the WDR's and NPDES permit should contact the Central Valley Water Board, reference this facility, and provide a name, address, and phone number.

G. Additional Information

Requests for additional information or questions regarding this order should be directed to David Kirn at (916) 464-4761.

ATTACHMENT G – SUMMARY OF REASONABLE POTENTIAL ANALYSIS

Constituent	Units	MEC	B	C	CMC	CCC	Water & Org	Org. Only	Basin Plan	MCL	Reasonable Potential
Ammonia Nitrogen, Total (as N)	mg/L	5.2	--	1.45	2.14[1]	1.45[2]	--	--	--	--	Yes
Bis (2-ethylhexyl) phthalate	µg/L	14	--	5.9	--	--	--	5.9	--	--	No[3]
Boron, Total Recoverable	mg/L	2.5[4]	--	1.5[5]	--	--	--	--	--	--	Yes
Electrical Conductivity @ 25°C	µmhos/cm	1,714[4]	715[4]	1,400[5]	--	--	--	--	--	--	Yes
Mercury, Total Recoverable	µg/L	0.11	--	--	--	--	--	0.051	--	--	No[6]
Selenium, Total Recoverable	µg/L	7.9	--	5	20	5	--	4,200	--	--	Yes
Total Dissolved Solids	mg/L	1,027[4]	--	--	--	--	--	--	--	--	Yes

General Note: All inorganic concentrations are given as a total recoverable.
MEC = Maximum Effluent Concentration
B = Maximum Receiving Water Concentration or lowest detection level, if non-detect
C = Criterion used for Reasonable Potential Analysis
CMC = Criterion Maximum Concentration (CTR or NTR)
CCC = Criterion Continuous Concentration (CTR or NTR)
Water & Org = Human Health Criterion for Consumption of Water & Organisms (CTR or NTR)
Org. Only = Human Health Criterion for Consumption of Organisms Only (CTR or NTR)
Basin Plan = Numeric Site-specific Basin Plan Water Quality Objective
MCL = Drinking Water Standards Maximum Contaminant Level
NA = Not Available
ND = Non-detect

Footnotes:
(1) U.S. EPA National Recommended Ambient Water Quality Criteria, Freshwater Aquatic Life Protection, 1-hour average.
(2) U.S. EPA National Recommended Ambient Water Quality Criteria, Freshwater Aquatic Life Protection, 30-day average.
(3) See section IV.C.3.a of the Fact Sheet (Attachment F) for a discussion of the RPA results.
(4) Represents the maximum observed annual average concentration.
(5) Site-specific water quality objective for the protection of the agricultural beneficial use.
(6) See section IV.C.3.b of the Fact Sheet (Attachment F) for a discussion of the RPA results.

ATTACHMENT H – CALCULATION OF WQBELS

Parameter	Units	Most Stringent Criteria			HH Calculations[1]			Aquatic Life Calculations[1]									Final Effluent Limitations	
		HH	CMC	CCC	ECA_{HH} = $AMEL_{HH}$	AMEL/MDEL $Multiplier_{HH}$	$MDEL_{HH}$	ECA $Multiplier_{acute}$	LTA_{acute}	ECA $Multiplier_{chronic}$	$LTA_{chronic}$	Lowest LTA	AMEL $Multiplier_{95}$	$AMEL_{AL}$	MDEL $Multiplier_{99}$	$MDEL_{AL}$	Lowest AMEL	Lowest MDEL
Ammonia Nitrogen, Total (as N)	mg/L	--	2.14	1.45	--	--	--	0.32	0.69	0.78	1.1	0.69	1.55	1.1	3.11	2.1	1.1	2.1
Selenium, Total Recoverable	µg/L	4,200	20	5	4,200	1.65	6,930	0.45	9.0	0.65	3.3	3.3	1.35	4.4	2.23	7.3	4.4	7.3

[1] As discussed in section IV.C.2.c of the Fact Sheet (Attachment F), calculation of effluent limitations for the protection of human health and aquatic life are determined without the allowance of dilution credits.