SR

USDA United States Department of Agriculture | Forest Service | Plumas National Forest

159 Lawrence Street
P. O. Box 11500
Quincy, CA 95971-6025
(530) 283-2050 Voice
(530) 534-7984 Text (TDD)

File Code: 25400
Date: March 3, 2006

RECEIVED
SACRAMENTO
CVRWQCB
06 MAR -7 PM 2:39

Mr. Steve Rosenbaum
California Regional Water Quality Control Board -
Central Valley Region
11020 Sun Center Drive, Suite #200
Rancho Cordova, CA 95670-6114

Dear Mr. Rosenbaum:

This letter is provided to your agency as an update concerning recent remediation progress and planned future activities at the Walker Mine Tailings site on Plumas National Forest (PNF) lands in Plumas County.

Negotiations with the Atlantic Richfield Company (ARCO), the Potentially Responsible Party for the site, were completed in 2005, with the Forest Service receiving a settlement that will cover a large portion of the anticipated site remediation costs. With the settlement in place, the Forest Service now has the funds available to proceed with the remedy construction and implementation.

The primary remediation activity identified in the United States Forest Service's 2001 Amended Record of Decision (ROD) for the Walker Mine Tailings site is the diversion of Dolly Creek around the tailings material. Dolly Creek currently flows for approximately 4,000 feet over the tailings site. Annual monitoring data collected by the PNF since 1991 indicate that this creek picks up dissolved copper as it flows over the tailings. This copper is delivered to Little Grizzly Creek immediately downstream of the tailings, at the confluence of Dolly and Little Grizzly Creeks. Monitoring data indicate that the resulting copper concentration in Little Grizzly Creek typically exceeds federal standards for protection of freshwater aquatic species.

The design for this diversion channel was completed by a consulting engineering firm in September 2005. A copy of this design is enclosed with this letter. The construction contract for the diversion channel will be advertised by the Plumas National Forest in spring 2006. Construction is expected to begin by July 2006.

The 2001 ROD also calls for vegetation planting treatments over the majority of the tailings area. Design for these treatments will continue in 2006 with planting scheduled to begin in 2007.

Please call Joe Hoffman of this office at (530) 283-7868 if you have questions.

Sincerely,

James M. Peña

JAMES M. PEÑA
Forest Supervisor
cc: Dennis J Geiser, Rose Miksovsky

607530171

UNITED STATES DEPARTMENT OF AGRICULTURE
FOREST SERVICE
PACIFIC SOUTHWEST REGION FIVE

PLUMAS NATIONAL FOREST
DOLLY CREEK DIVERSION CHANNEL
BECKWOURTH RANGER DISTRICT

INDEX TO SHEETS

SH1 TITLE SHEET
SH2 LOCATION MAP
SH3 SCHEDULE OF ITEMS
SH4 GENERAL SITE PLAN
SH5 SITE PROFILE
SH6 UPPER CHANNEL
SH7 SEDIMENT BASIN
SH8 LOWER CHANNEL
SH9 INLET STRUCTURE
SH10 INLET SECTION AND DETAILS
SH11 MISCELLANEOUS DETAILS
SH12 STREAM CROSSING DETAIL

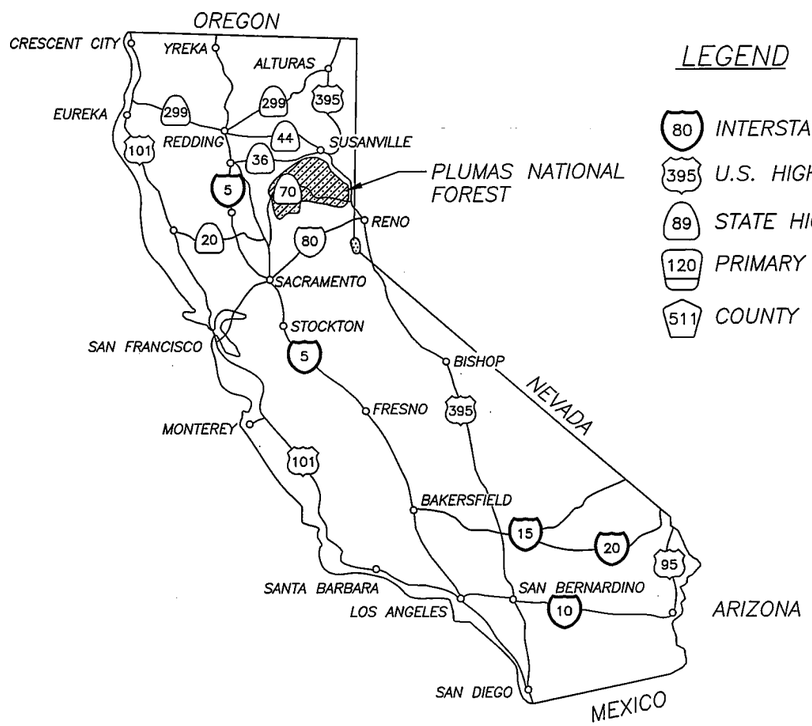

LEGEND

- 80 INTERSTATE HIGHWAY
- 395 U.S. HIGHWAY
- 89 STATE HIGHWAY
- 120 PRIMARY FOREST ROUTE
- 511 COUNTY ROAD

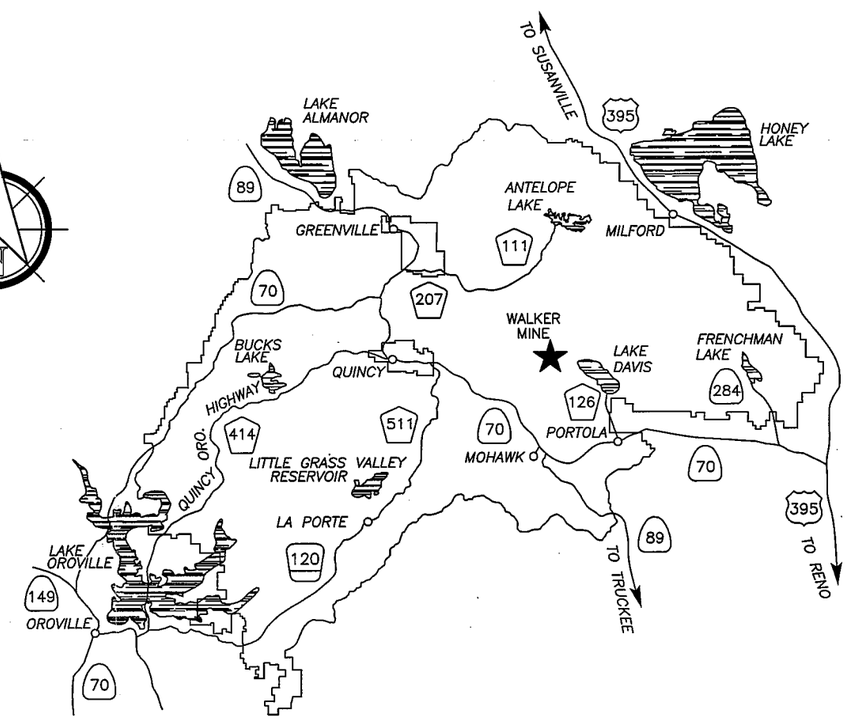

STATE OF CALIFORNIA

INDEX MAP

PLUMAS NATIONAL FOREST

U.S. DEPARTMENT OF AGRICULTURE
FOREST SERVICE
PLUMAS NATIONAL FOREST
NEVADA CITY, CALIFORNIA

NO.	DATE	DWN	APP'D	DESCRIPTION

REVISIONS

Tetra Tech, EM Inc.
San Francisco, California

DESIGNED BY: G. STURM
CHECKED BY: J. BOSCHE
DRAWN BY: A. CADE

APPROVED BY: J. BOSCHE

WALKER MINE
TITLE SHEET
USDA FOREST SERVICE
PLUMAS NATIONAL FOREST

SCALE	DATE ISSUED	CAD FILE NO.	DRAWING NO.
Not to Scale	10/21/2005	DOLLY CREEK.DWG	1 OF 12

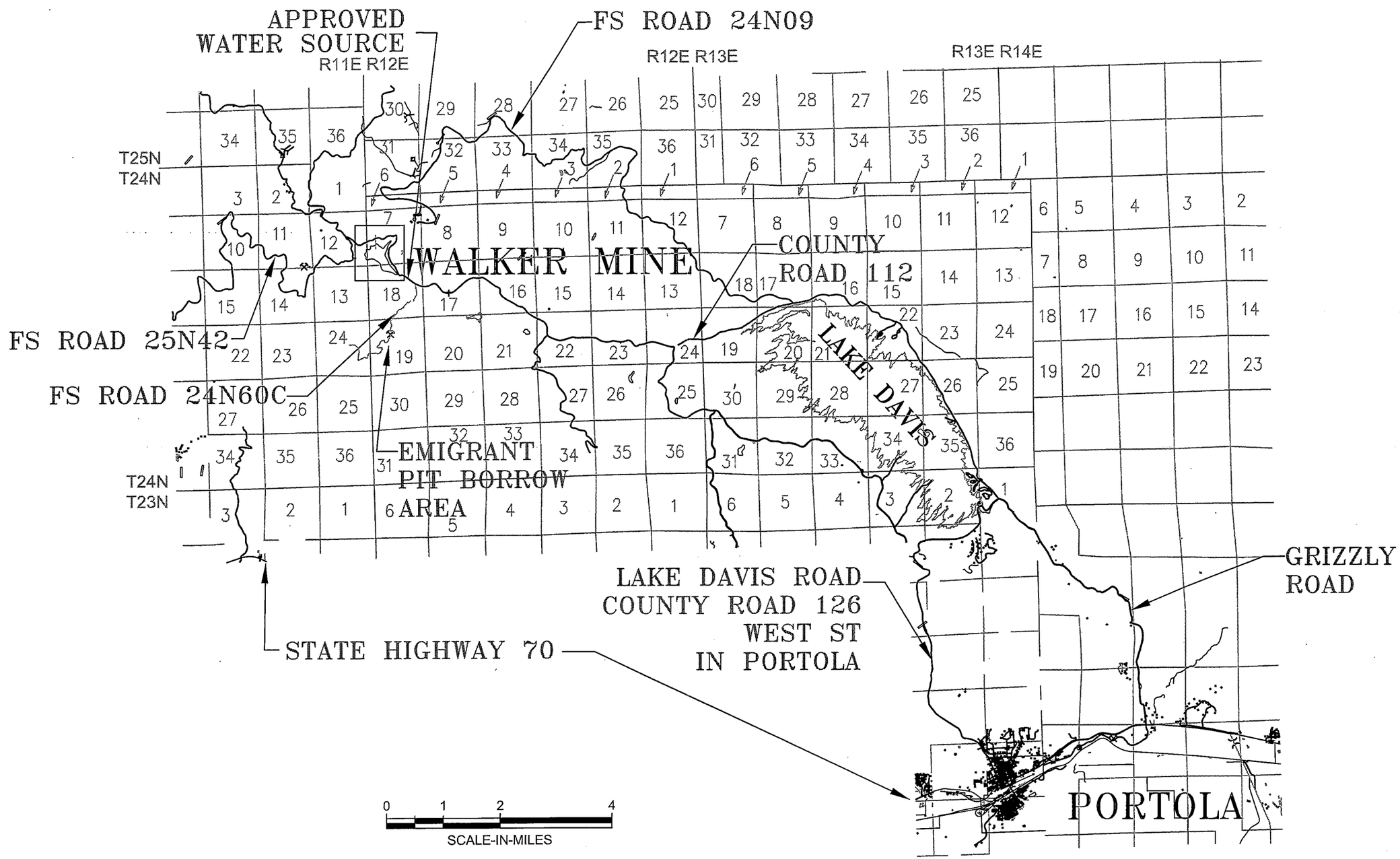

LEGEND

ROAD IMPROVED

34 *SECTION NUMBER*

U.S. DEPARTMENT OF AGRICULTURE
FOREST SERVICE
PLUMAS NATIONAL FOREST
NEVADA CITY, CALIFORNIA

NO.	DATE	INIT.	APP'D	DESCRIPTION

REVISIONS

Tetra Tech, EM Inc.
San Francisco, California

DESIGNED BY: G. STURM
CHECKED BY: J. BOSCHE
DRAWN BY: A. CADE

REVIEWED BY: J. BOSCHE

WALKER MINE
LOCATION MAP
USDA FOREST SERVICE
PLUMAS NATIONAL FOREST

SCALE	DATE ISSUED	CAD FILE NO.	DRAWING NO.
SEE ABOVE	10/21/2005	DOLLY CREEK.DWG	2 OF 12

ITEM NO.	DESCRIPTION	ESTIMATED QUANTITY	UNIT
170(02)	ESTABLISH CENTERLINE (PRECISION A)	0.65	MI.
170(03)	SLOPE STAKING (PRECISION B)	0.65	MI.
170(06)	STAKING MAJOR STRUCTURES: INLET STRUCTURE, AND SEDIMENTATION BASIN	2	EA.
201(04)	CLEARING AND GRUBBING, SLASH TREATMENT METHODS FOR TOPS AND LIMBS 12, LOGS 12, AND STUMPS 12, UTILIZATION OF TIMBER 2	JOB	L.S.
201(08)	REMOVAL OF TREES, MISCELLANEOUS, SLASH TREATMENT METHODS FOR TOPS AND LIMBS 4, AND LOGS 4, UTILIZATION OF TIMBER 2	50	EA.
203(04)	EXCAVATION, PLACEMENT METHOD 4 (SEE NOTES 1, 2, 7, & 9)	13,500	C.Y.
203(09)A	DRAINAGE DITCH	1,700	L.F.
203(09)B	NEW ROAD	230	L.F.
203(20)	DRAINAGE EXCAVATION, TYPE: LOW WATER CROSSING	1	EA.
204(07)	SOIL EROSION AND POLLUTION CONTROL (SEE NOTE 3)	1,800	L.F.
204(16)	EROSION CONTROL FABRIC FOR SOIL EROSION AND POLLUTION CONTROL	370	S.Y.
206(01)A	EXCAVATION FOR INLET STRUCTURE (SEE NOTE 4)	500	C.Y.
304(11)A	CRUSHED AGGREGATE FOR ROAD, TYPE BASE COURSE, COMPACTION B (SEE NOTES 5 & 8)	900	C.Y.
304(11)B	CRUSHED AGGREGATE FOR GRAVEL CUSHION, TYPE BASE COURSE, COMPACTION A (SEE NOTES 6, 7, & 8)	2,200	C.Y.
552(02)	STRUCTURAL CONCRETE, CLASS A, INLET STRUCTURE (SEE NOTE 9)	53	C.Y.
601A(01)	MOBILIZATION	JOB	L.S.
616(06)	PLASTIC WATERSTOP	JOB	L.S.
619(03)A	MACHINE-PLACED RIPRAP, CLASS I	1,200	C.Y.
619(03)B	MACHINE-PLACED RIPRAP, CLASS VII	2,600	C.Y.
625(20)	SEEDING, DRY METHOD WITH STRAW MULCH, (WITH BINDER) NATIVE PLUMAS SEED MIX	2.0	ACRE
630(01)	GABIONS	530	C.Y.
720A(01)	GEOMEMBRANE , 30 MIL HDPE LINER	18,900	S.Y.
720I(01)	EROSION CONTROL FABRIC	370	S.Y.

PAY ITEM NOTES:

1. OF THE 13,500 CY EXCAVATED, 1,250 CY OF "EXCESS EXCAVATION" FROM LOWER CHANNEL TO BE PLACED ALONG THE SOUTH SIDE OF THE STREAM CHANNEL/ROADBED, AND 5,400 CY OF "EXCESS EXCAVATION" FROM THE UPPER CHANNEL IS TO BE PLACED IN THE SPOIL AREA BY METHOD 1. THE CONTRACTOR MAY CHOOSE TO USE ANY LARGE BOULDER FROM UPPER CHANNEL AS PART OF RIPRAP APRON LOCATED BELOW INLET STRUCTURE AS SHOWN ON SHEET 7.
2. EXCAVATION CONSTRUCTION TOLERANCE SHALL BE CLASS "B", PER SECTION 203.16.
3. INSTALL SILT FENCING AS SHOWN ON SHEET 12.
4. STRUCTURAL EXCAVATION SHALL BE DEFINED AS ALL EXCAVATION WITHIN THE FOOTPRINT OF CONCRETE STRUCTURES FROM THE EXISTING GROUND SURFACE TO THE DEPTHS AND ELEVATIONS INDICATED ON THE DRAWINGS.
5. BASE COURSE FOR ROAD CONSTRUCTION SHALL BE GRADING C PER SECTION 703, TABLE 703-4.
6. BASE COURSE FOR GRAVEL CUSHION (OVERLYING GEOMEMBRANE) SHALL BE GRADING K PER SECTION 703, TABLE 703-4.
7. MATERIAL USED FOR FILL (TO CONSTRUCT THE EMBANKMENT) AND TO OVERLAY THE GEOMEMBRANE (GRAVEL CUSHION FOR RIPRAP) MAY COME FROM ONSITE SOURCES, WITH THE FOLLOWING REQUIREMENTS: TAILING MATERIAL MAY NOT BE USED TO OVERLAY THE GEOMEMBRANE AND MAY NOT BE USED FOR FILL UPSTREAM OF THE SEDIMENTATION BASIN; AND ALL OTHER SPECIFIED GRADING REQUIREMENTS ARE MET.
8. QUALITY CONTROL TESTING PER SECTION 160 IS CONSIDERED INCIDENTAL TO PAY ITEMS 203(04), 304(11)A, 304(11)B AND 552(02).
9. MISCELLANEOUS METALS USED IN STRUCTURAL CONCRETE ARE CONSIDERED INCIDENTAL TO PAY ITEM 552(04). SEE SHEETS 10, 11, AND 12 FOR DETAILS.
10. CLASS I RIPRAP TO BE OBTAINED FROM EMIGRANT PIT BORROW AREA.
11. CLASS I AND CLASS VI RIPRAP GRADATIONS TO BE MODIFIED PER SPECIAL PROJECT SPECIFICATIONS (SPS).

U.S. DEPARTMENT OF AGRICULTURE
FOREST SERVICE
PLUMAS NATIONAL FOREST
NEVADA CITY, CALIFORNIA

NO.	DATE	DWN	APP'D	DESCRIPTION

REVISIONS

Tetra Tech, EM Inc.
San Francisco, California

DESIGNED BY: G. STURM
CHECKED BY: J. BOSCHE
DRAWN BY: A. CADE
APPROVED BY: J. BOSCHE

WALKER MINE SCHEDULE OF ITEMS

USDA FOREST SERVICE
PLUMAS NATIONAL FOREST

SCALE	DATE ISSUED	CAD FILE NO.	DRAWING NO.
Not to Scale	10/21/2005	DOLLY CREEK.DWG	3 OF 12

CENTERLINE COORDINATES

POINT	STATION	EASTING	NORTHING
01	0+00.00	5528.4626'	15093.6828'
02	0+12.78	5517.8910'	15100.8675'
03	0+34.32	5497.2316'	15106.9468'
04	0+59.34	5472.3336'	15104.4692'
05	0+97.30	5435.3776'	15095.8063'
06	1+35.99	5402.1349'	15076.0054'
07	4+14.04	5175.4360'	14915.0070'
08	12+26.87	4613.0549'	14328.1339'
09	12+62.40	4581.4490'	14311.9141'
10	12+92.93	4551.2417'	14307.4397'
11	13+73.74	4470.5301'	14311.3529'
12	15+48.99	4296.9388'	14335.4079'
13	16+34.48	4275.8225'	14418.2511'
14	16+53.67	4260.4391'	14429.7168'
15	16+71.55	4242.8182'	14426.6407'
16	17+32.24	4206.1778'	14378.2609'
17	17+48.80	4190.2350'	14373.7865'
18	17+68.28	4175.1314'	14386.0912'
19	18+28.57	4164.2231'	14445.3773'
20	18+54.04	4139.0503'	14449.2925'
21	20+40.74	3954.9467'	14480.3326'
22	20+99.36	3896.3320'	14480.3326'
23	23+58.10	3640.4478'	14441.9860'
24	23+95.26	3604.6587'	14431.9667'
25	24+44.62	3561.7117'	14407.6340'
26	26+36.42	3404.2394'	14298.1372'
27	28+09.04	3261.4343'	14201.1758'
28	34+92.70	2747.3036'	13750.5465'

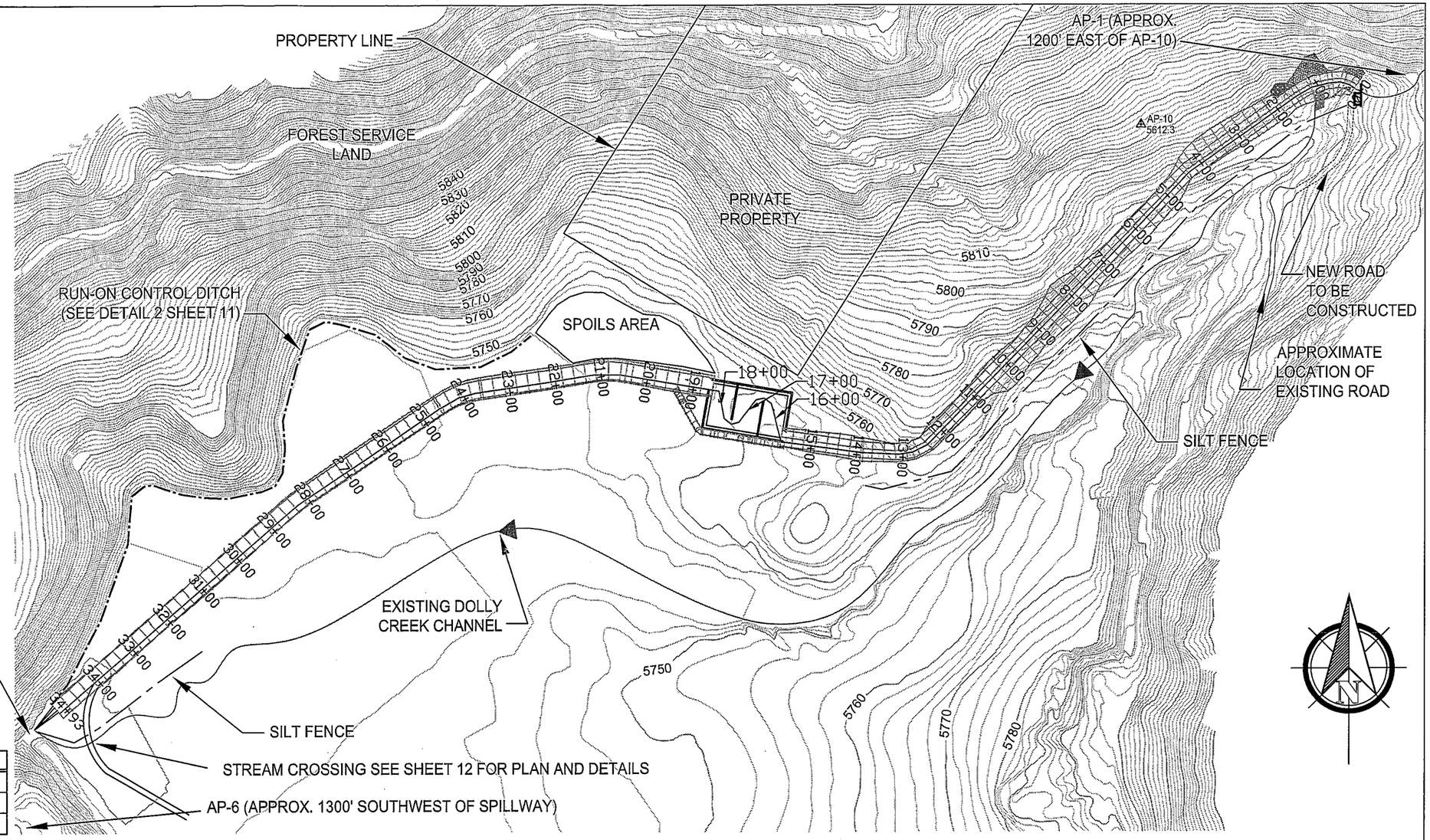

TABLE OF CONTROL POINTS

POINT	NORTHING	EASTING	ELEVATION
AP-6	13,168.43	1,482.00	5676.1
AP-10	15,017.00	5,069.00	5612.3
AP-1	14,813.57	6,245.86	6016.5

TABLE OF CHANNEL CONTROL ELEVATIONS

Station	Slope	Invert Elevation	Comment
0+00		5807	Begin Channel Match Existing
	3.42%		
15+50		5754	Inlet Settling Pond
	2.03%		
18+45		5748	Outlet Settling Pond
	0.61%		
34+93		5738	End of Channel Match Existing

CONSTRUCTION NOTES:

1. A BORROW PIT FOR STONE EXISTS APPROXIMATELY TWO MILES FROM THE PROJECT. THE CONTRACTOR MAY USE STONE FROM THIS PIT FOR CLASS I RIPRAP AND GABION FILL. HOWEVER, THERE IS NO GUARANTEE THAT THE STONE FROM THIS PIT WILL MEET THE SIZE REQUIREMENTS SPECIFIED FOR RIPRAP AND GABION STONE SPECIFIED. THE CONTRACTOR SHALL LEAVE THE BORROW PIT IN APPROXIMATELY THE SAME CONDITION AS FOUND. POSITIVE DRAINAGE SHALL BE MAINTAINED AT ALL TIMES, AND ACCESS SHALL NOT BE BLOCKED EXCEPT WHEN LOADING STONE.
2. FOR CONCRETE NOTES, SEE SHEET 11.
3. EXCESS EXCAVATION FROM UPPER CHANNEL SHALL BE PLACED IN THE SPOIL AREA INDICATED. EXCESS EXCAVATION CONSISTING OF TAILINGS FROM LOWER CHANNEL MAY BE SPREAD IN UNIFORM LAYER OVER EXISTING TAILINGS ALONG SOUTH SIDE OF NEW ROADWAY.

U.S. DEPARTMENT OF AGRICULTURE
FOREST SERVICE
PLUMAS NATIONAL FOREST
NEVADA CITY, CALIFORNIA

NO.	DATE	DWN	APPD	DESCRIPTION

REVISIONS

Tetra Tech, EM Inc.
San Francisco, California

DESIGNED BY: G. STURM
CHECKED BY: J. BOSCHE
DRAWN BY: A. CADE

REGISTERED PROFESSIONAL ENGINEER
No. 35241
Exp. 3/31/06
STATE OF CALIFORNIA

APPROVED BY: J. BOSCHE

WALKER MINE GENERAL SITE PLAN

USDA FOREST SERVICE
PLUMAS NATIONAL FOREST

SCALE	DATE ISSUED	CAD FILE NO.	DRAWING NO.
1"=250'	10/21/2005	DOLLY CREEK.DWG	4 OF 12

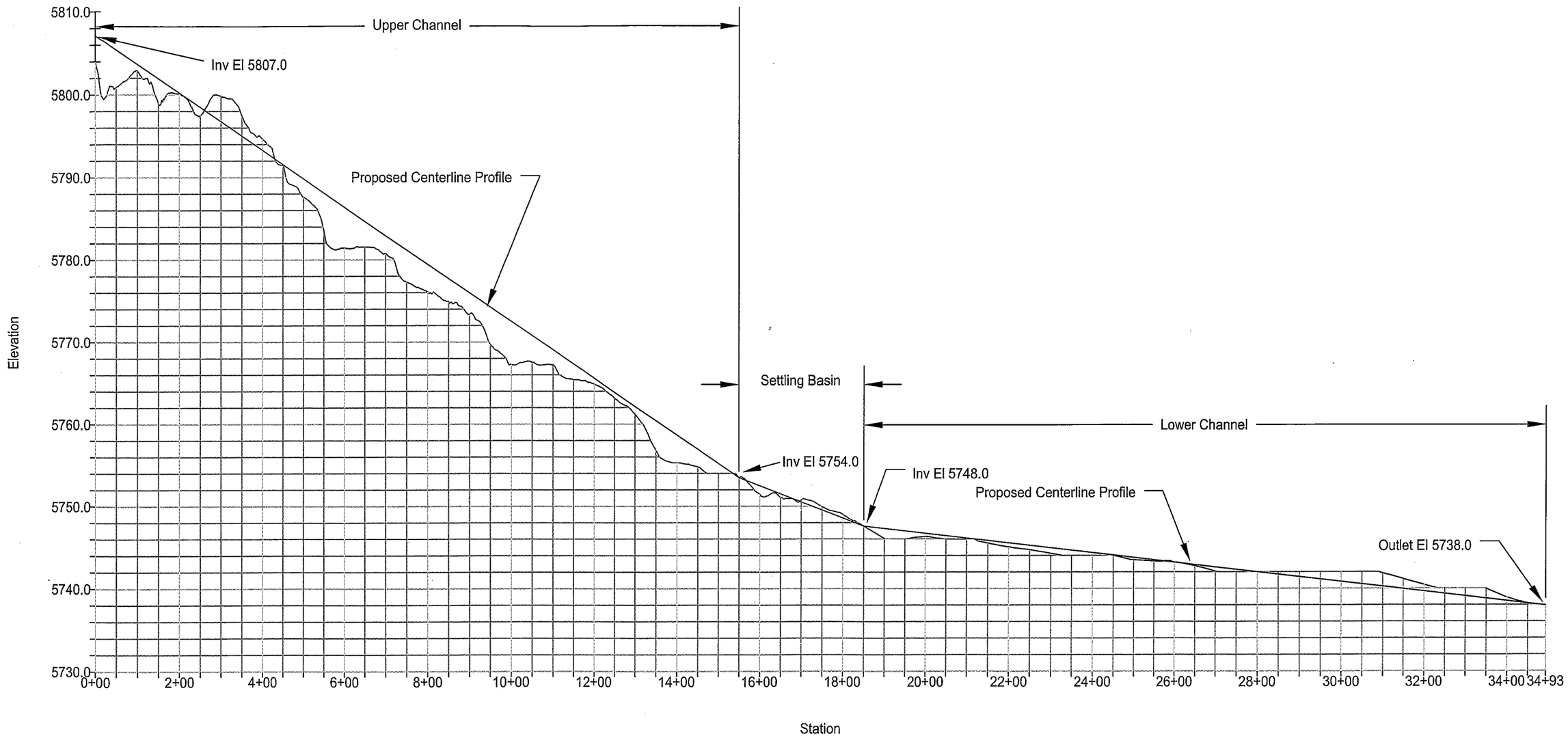

NOTE: VERTICAL EXAGGERATION OF 20X.

U.S. DEPARTMENT OF AGRICULTURE
FOREST SERVICE
PLUMAS NATIONAL FOREST
NEVADA CITY, CALIFORNIA

NO.	DATE	DWN	APP'D	DESCRIPTION

REVISIONS

Tetra Tech, EM Inc.
San Francisco, California

DESIGNED BY: G. STURM
CHECKED BY: J. BOSCHE
DRAWN BY: A. CADE
APPROVED BY: J. BOSCHE

WALKER MINE SITE PROFILE

USDA FOREST SERVICE
PLUMAS NATIONAL FOREST

SCALE	DATE ISSUED	CAD FILE NO.	DRAWING NO.
1"=250'	10/21/2005	DOLLY CREEK.DWG	5 OF 12

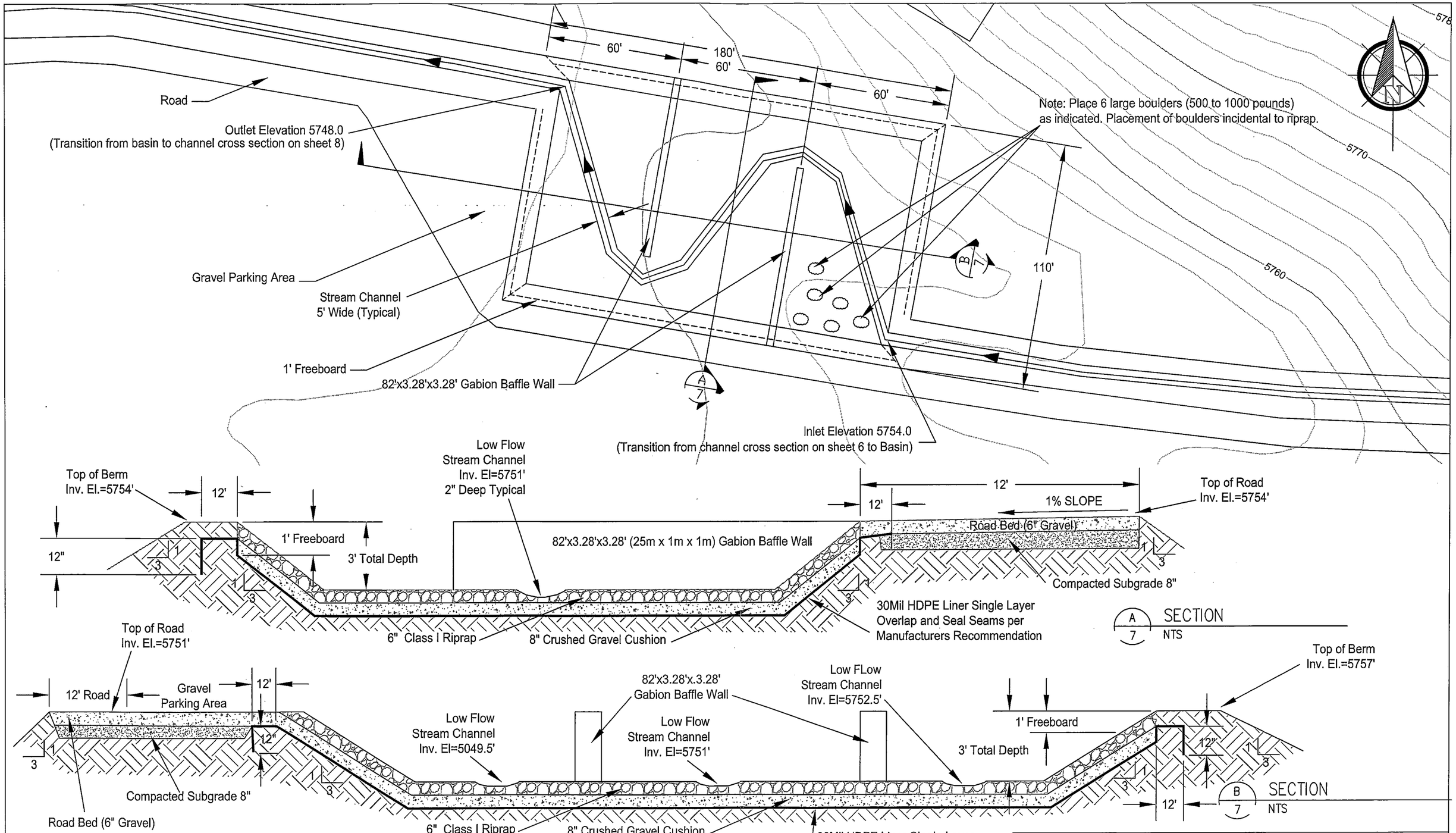

U.S. DEPARTMENT OF AGRICULTURE
FOREST SERVICE
PLUMAS NATIONAL FOREST
NEVADA CITY, CALIFORNIA

Note: Class I and Class VII Gradation to be
Modified per Special Project Specification (SPSs)

NO.	DATE	DWN	APP'D	DESCRIPTION

REVISIONS

Tetra Tech, EM Inc.
San Francisco, California

DESIGNED BY: G. STURM
CHECKED BY: J. BOSCHE
DRAWN BY: A. CADE

REGISTERED PROFESSIONAL ENGINEER JAMES A. BOSCHE No. 41872 Exp. 3/31/06 STATE OF CALIFORNIA

APPROVED BY: J. BOSCHE

WALKER MINE SEDIMENT BASIN

USDA FOREST SERVICE
PLUMAS NATIONAL FOREST

SCALE	DATE ISSUED	CAD FILE NO.	DRAWING NO.
1"=40'	10/21/2005	DOLLY CREEK.DWG	7 OF 12

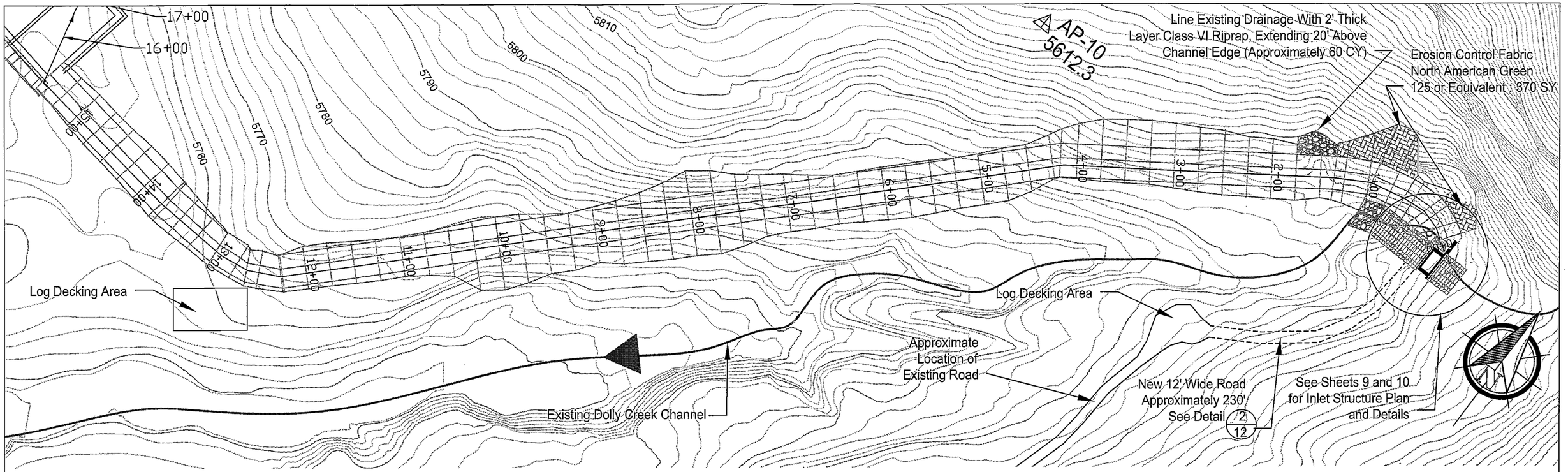

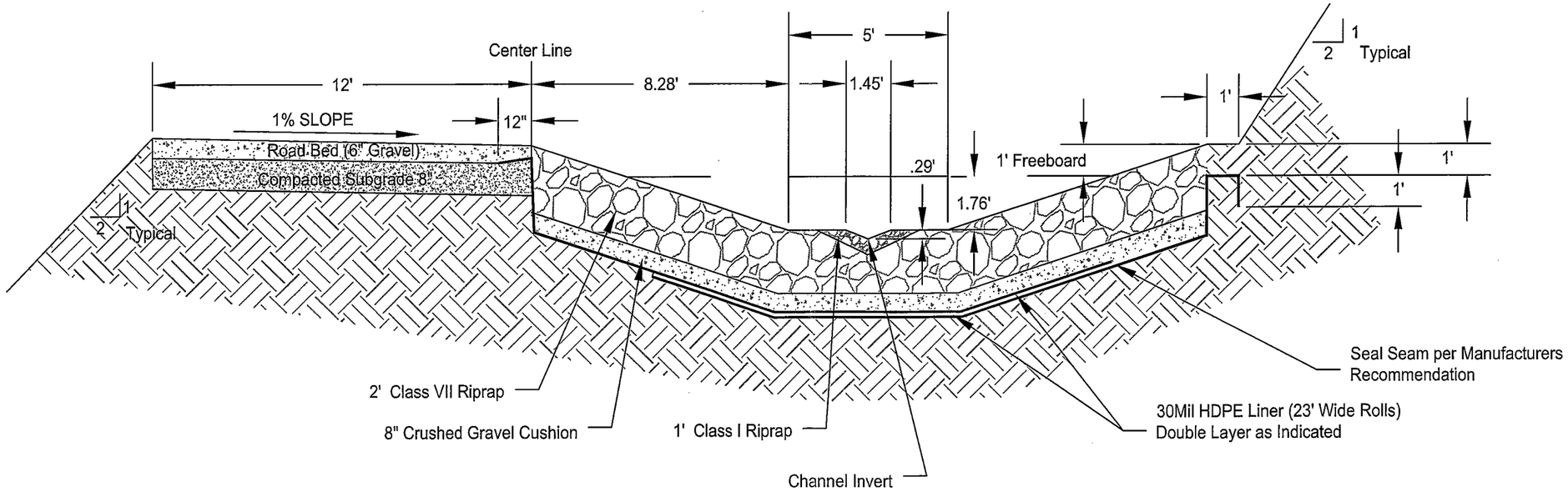

U.S. DEPARTMENT OF AGRICULTURE
FOREST SERVICE
PLUMAS NATIONAL FOREST
NEVADA CITY, CALIFORNIA

Note: Class I and Class VII Gradation to be Modified per Special Project Specification (SPSs)

NO.	DATE	BY	APPD	DESCRIPTION

REVISIONS

Tetra Tech, EM Inc.
San Francisco, California

DESIGNED BY: G. STURM
CHECKED BY: J. BOSCHE
DRAWN BY: A. CADE
APPROVED BY: J. BOSCHE

WALKER MINE UPPER CHANNEL

USDA FOREST SERVICE
PLUMAS NATIONAL FOREST

SCALE	DATE ISSUED	CAD FILE NO.	DRAWING NO.
1"=100'	10/21/2005	DOLLY CREEK.DWG	6 OF 12

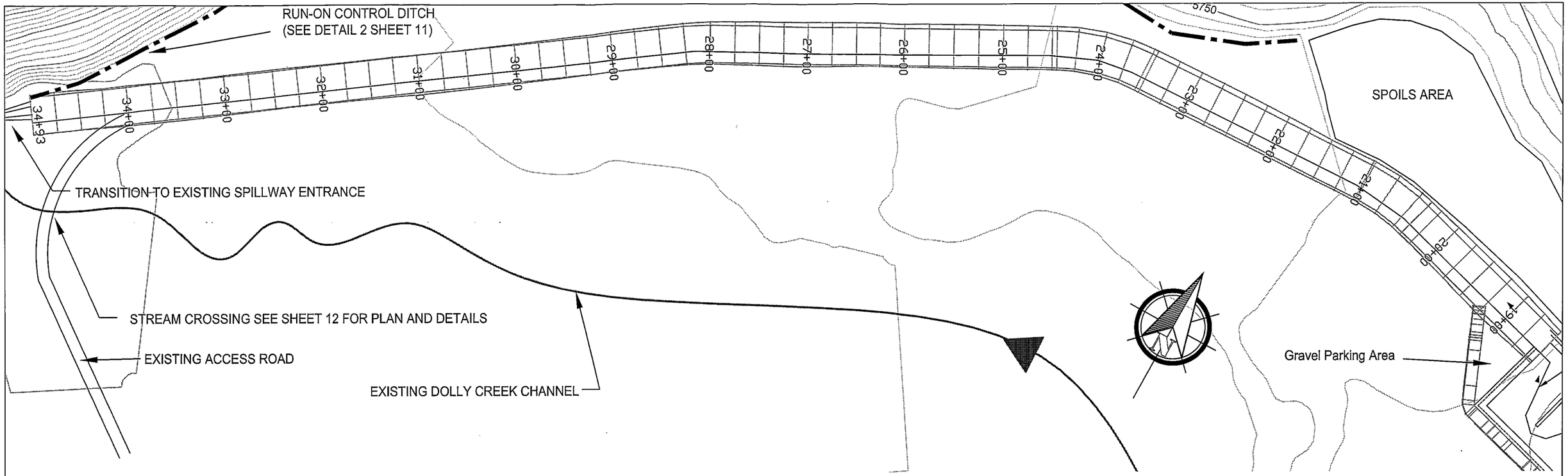

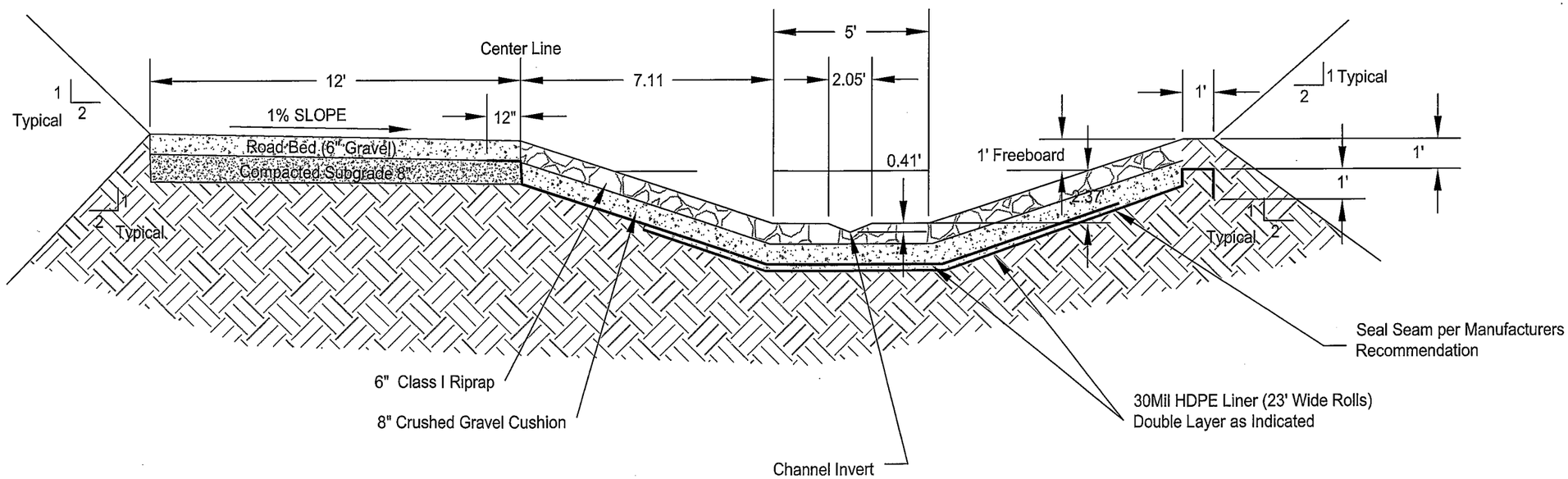

U.S. DEPARTMENT OF AGRICULTURE
FOREST SERVICE
PLUMAS NATIONAL FOREST
NEVADA CITY, CALIFORNIA

Note: Class I and Class VII Gradation to be Modified per Special Project Specification (SPSs)

NO.	DATE	DWN	APP'D	DESCRIPTION

Tetra Tech, EM Inc.
San Francisco, California

DESIGNED BY: G. STURM
CHECKED BY: J. BOSCHE
DRAWN BY: A. CADE

APPROVED BY: J. BOSCHE

WALKER MINE LOWER CHANNEL

USDA FOREST SERVICE
PLUMAS NATIONAL FOREST

SCALE	DATE ISSUED	CAD FILE NO.	DRAWING NO.
1"=100'	10/21/2005	DOLLY CREEK.DWG	8 OF 12

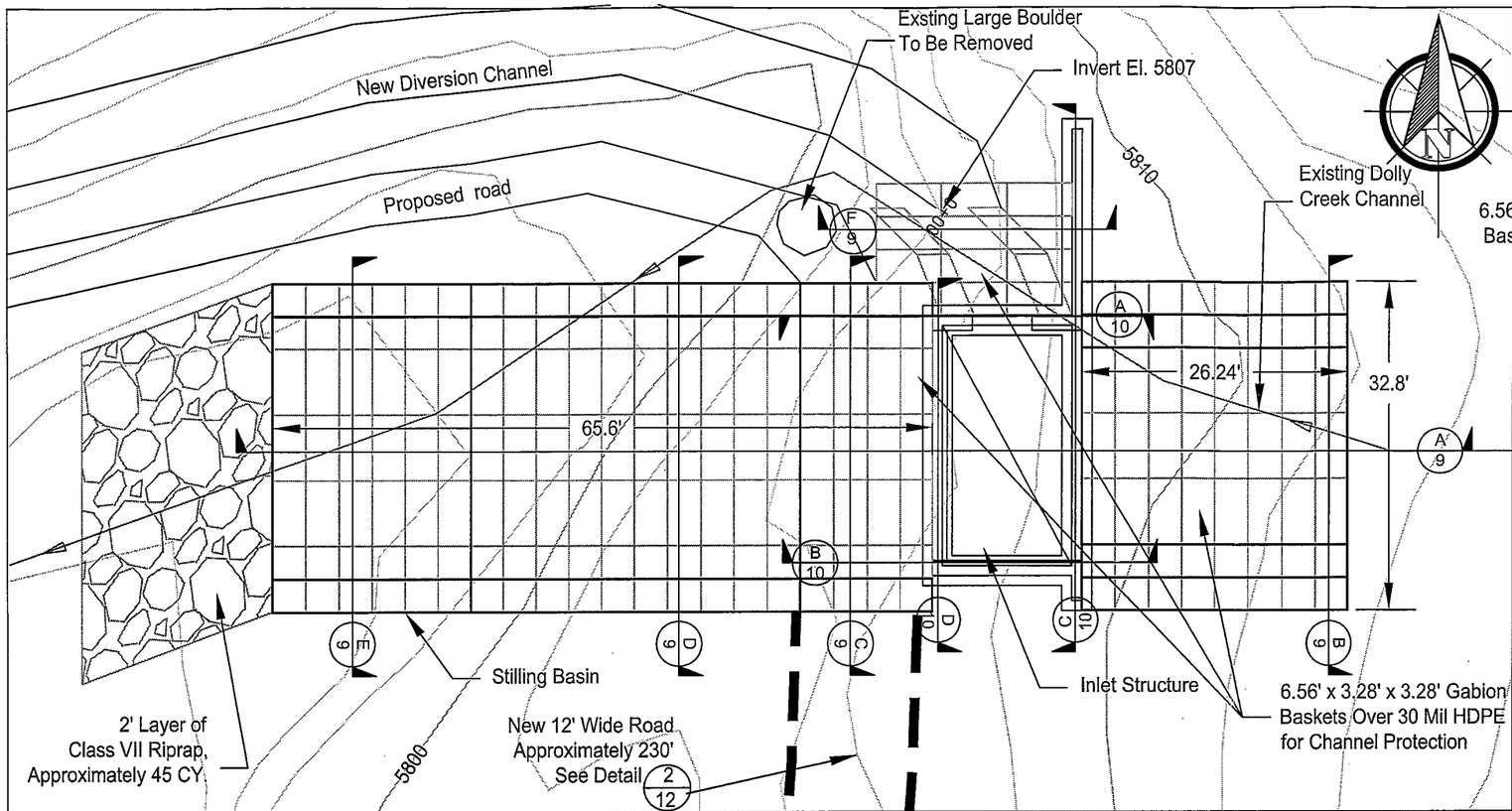

INLET STRUCTURE SITE PLAN

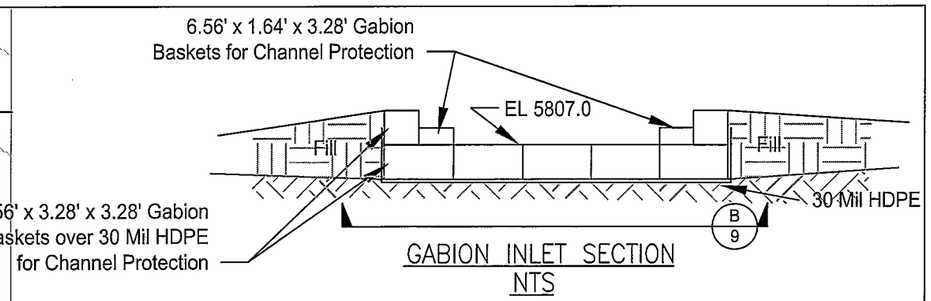

GABION INLET SECTION
NTS

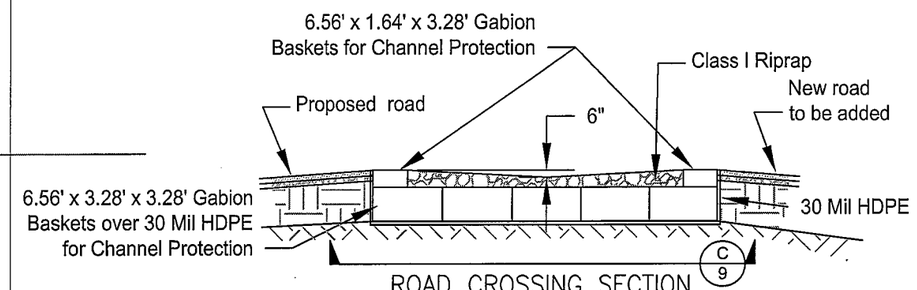

ROAD CROSSING SECTION
NTS

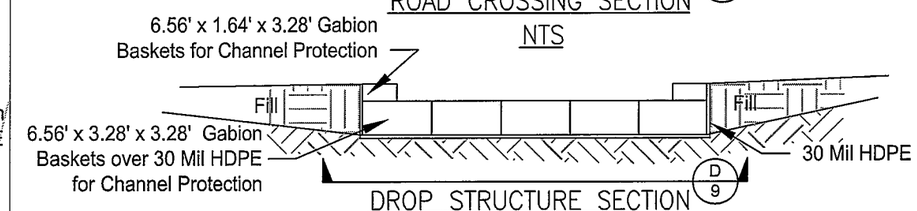

DROP STRUCTURE SECTION
NTS

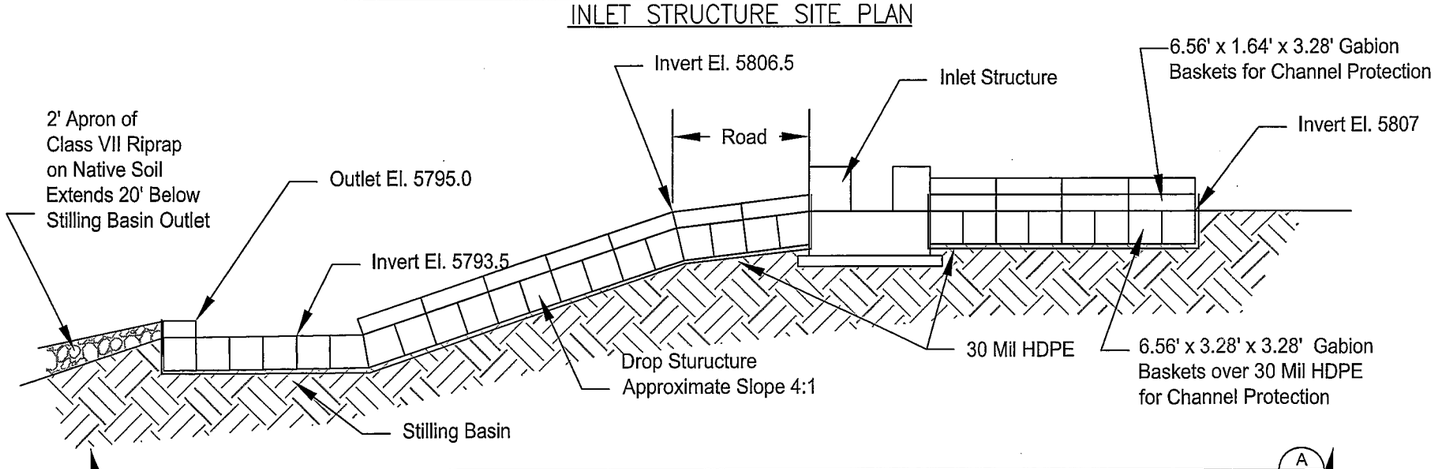

INLET STRUCTURE SECTION
NTS

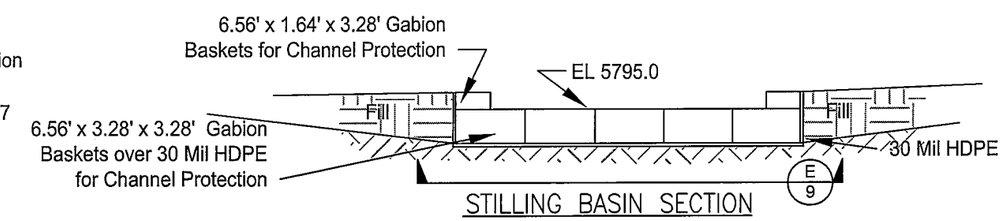

STILLING BASIN SECTION
NTS

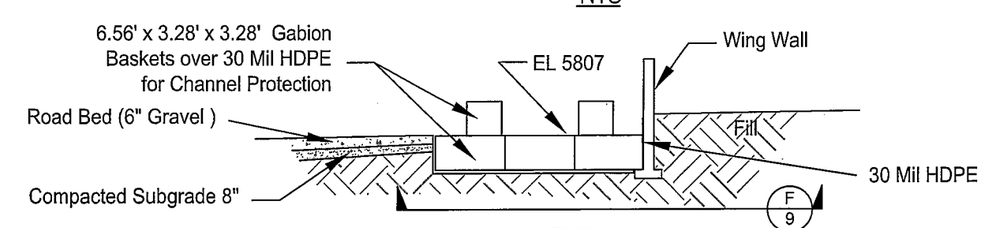

OUTLET SECTION
NTS

CONSTRUCTION NOTES:
1. ELEVATION OF INLET STRUCTURE MAY REQUIRE MODIFICATION TO MATCH FIELD CONDITIONS.

FOR CONCRETE NOTES, SEE SHEET 11

U.S. DEPARTMENT OF AGRICULTURE
FOREST SERVICE
PLUMAS NATIONAL FOREST
NEVADA CITY, CALIFORNIA

NO.	DATE	DWN	APP'D	DESCRIPTION

REVISIONS

Tetra Tech, EM Inc.
San Francisco, California

DESIGNED BY: G. STURM
CHECKED BY: J. BOSCHE
DRAWN BY: A. CADE
APPROVED BY: J. BOSCHE

WALKER MINE
INLET STRUCTURE
USDA FOREST SERVICE
PLUMAS NATIONAL FOREST

SCALE	DATE ISSUED	CAD FILE NO.	DRAWING NO.
1"=15'	10/21/2005	DOLLY CREEK.DWG	9 OF 12

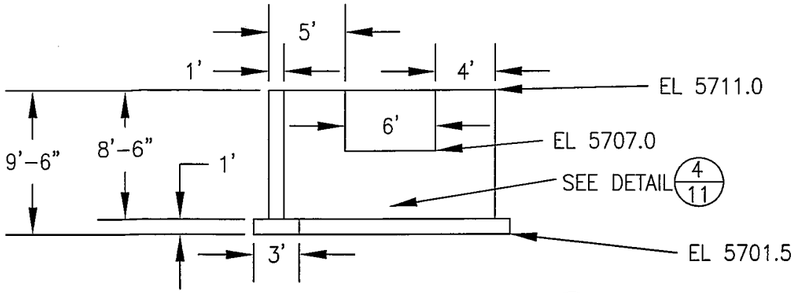

INLET STRUCTURE NORTH WALL (A/10)
NTS

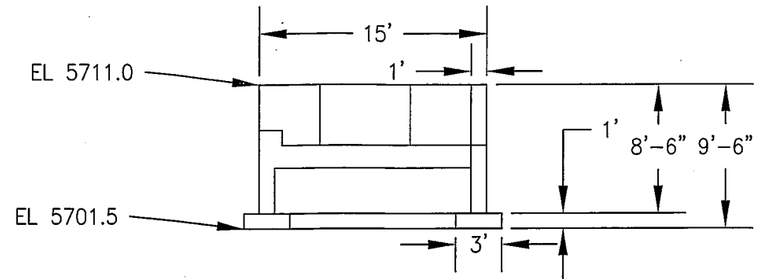

INLET STRUCTURE SOUTH WALL (B/10)
NTS

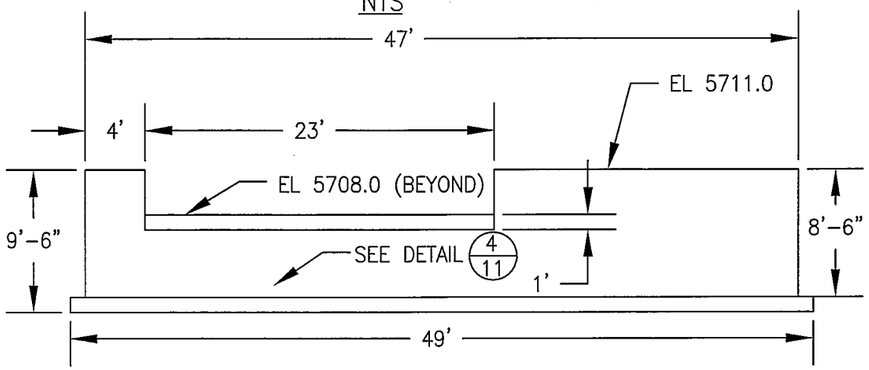

INLET STRUCTURE EAST WALL (C/10)
NTS

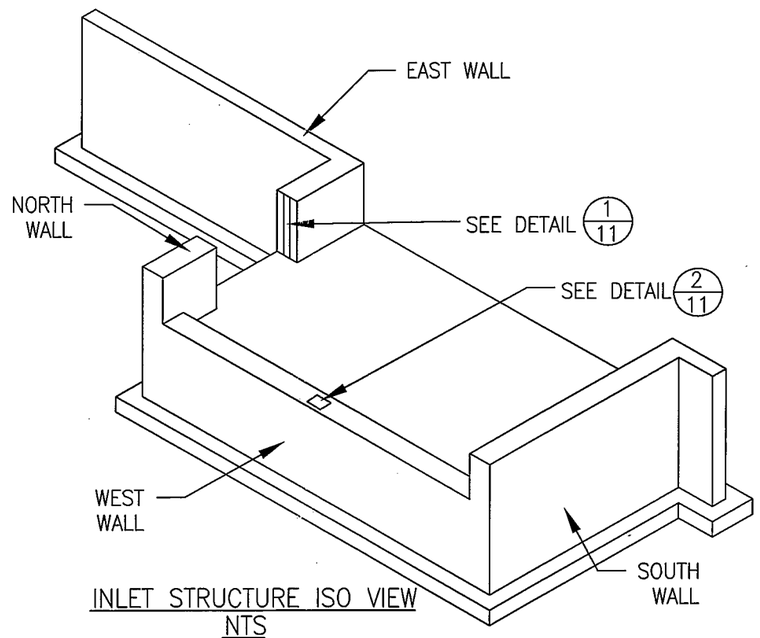

INLET STRUCTURE ISO VIEW
NTS

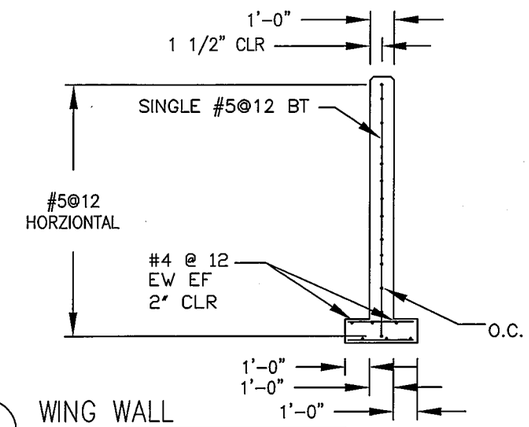

(?/10) WING WALL
NTS

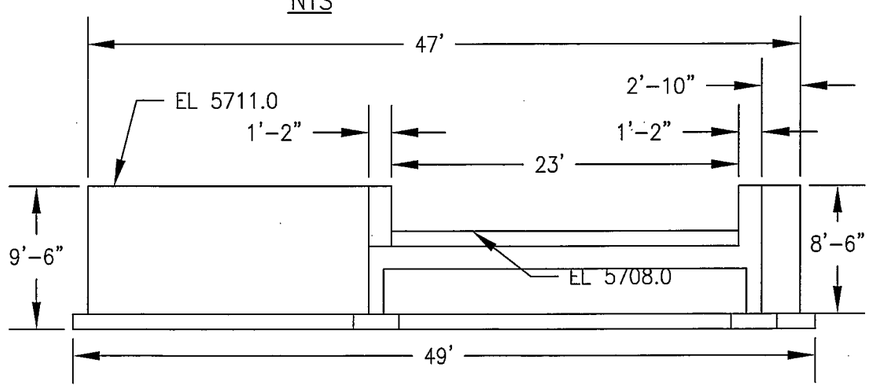

INLET STRUCTURE WEST WALL (D/10)
NTS

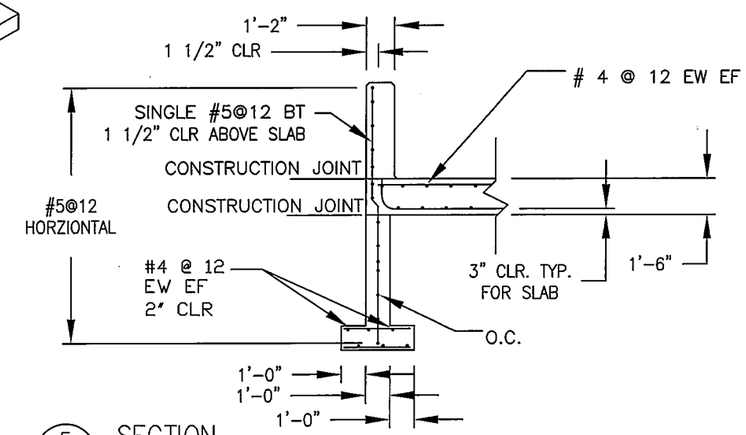

(E/10) SECTION
NTS

U.S. DEPARTMENT OF AGRICULTURE
FOREST SERVICE
PLUMAS NATIONAL FOREST
NEVADA CITY, CALIFORNIA

NO.	DATE	DWN	APV'D	DESCRIPTION

REVISIONS

Tetra Tech, EM Inc.
San Francisco, California

DESIGNED BY: G. STURM
CHECKED BY: J. BOSCHE
DRAWN BY: A. CADE

REGISTERED PROFESSIONAL ENGINEER
No. 37301
Civil
STATE OF CALIFORNIA
3/31/06

APPROVED BY: J. BOSCHE

WALKER MINE
INLET SECTION & DETAILS
USDA FOREST SERVICE
PLUMAS NATIONAL FOREST

SCALE	DATE ISSUED	CAD FILE NO.	DRAWING NO.
NTS	10/21/2005	DOLLY CREEK.DWG	10 OF 12

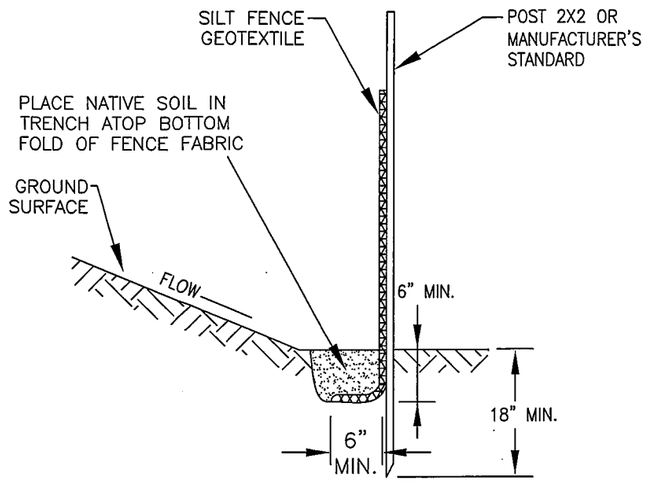

SILT FENCE PROFILE
NTS

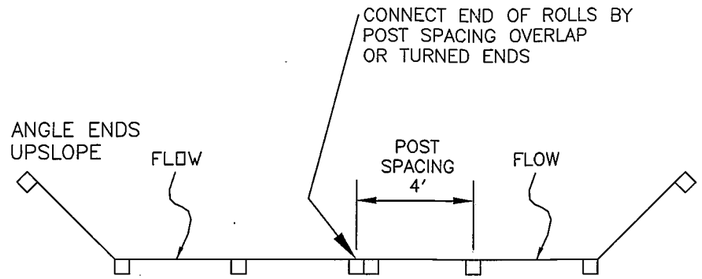

SILT FENCE PLAN
NTS

WATERSTOP NOTES:
1. WATERSTOP SHALL BE PVC AND OF STANDARD COMMERCIAL MANUFACTURE.
2. JOINTS IN WATERSTOP SHALL BE IN ACCORDANCE WITH MANUFACTURERS INSTRUCTIONS.

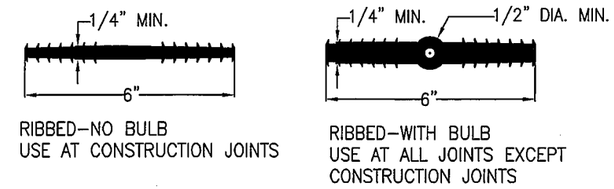

3 / 9,10 WATERSTOP
SCALE: NTS

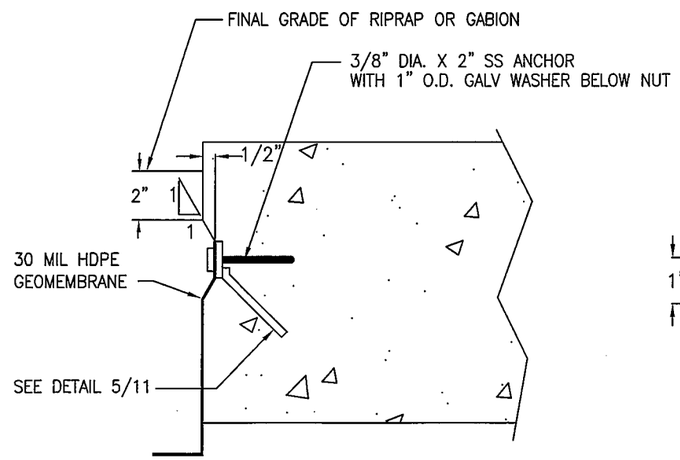

4 / 9,10 CONNECTION DETAIL
SCALE: NTS

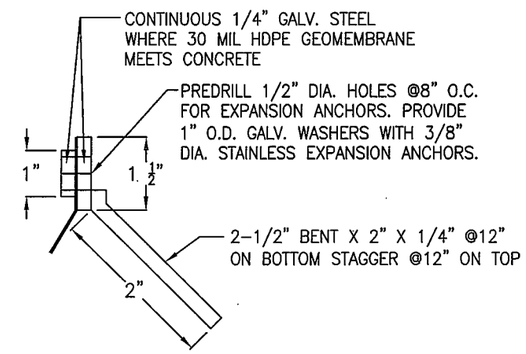

5 / 11 CLAMP DETAIL
SCALE: NTS

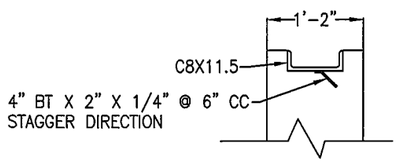

1 / 10 STOPLOG GUIDE
NTS

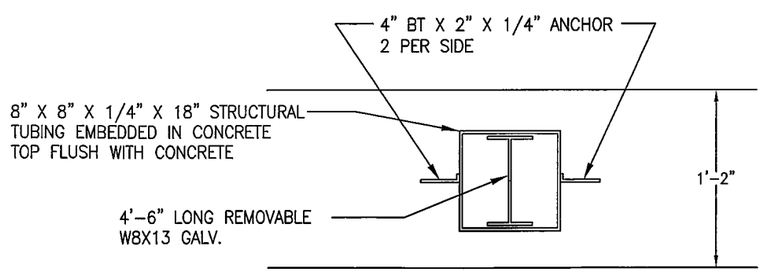

2 / 10 CENTER GUIDE
NTS

CONCRETE – NOTES
1. FC' = 3,000 PSI MIN
2. REINFORCING STEEL GRADE 60
3. PROVIDE WATERSTOP AT ALL JOINTS IN CONCRETE, SEE DETAIL 6, THIS SHEET.
4. MISCELLANEOUS METAL
   A. INCIDENTAL TO CONCRETE WORK
   B. MIN YIELD STRENGTH 36,000 PSI PER FOREST SERVICE SPECIFICATIONS 717.01
   C. ALL METAL NOT EMBEDDED IN CONCRETE SHALL BE GALVANIZED PER FOREST SERVICE SPECIFICATIONS 717.10
   D. GALVANIZE PRIOR TO SITE DELIVERY.
5. CHAMFER ALL EXPOSED EDGES 1-1/2"
6. PREFORMED EXPANSION JOINT MATERIAL SHALL BE ½" AND MEET THE REQUIREMENTS OF ASTM D 1056 TYPE 2, CLASS B, GRADE 2.

CONCRETE–ABBREVIATIONS
1. BT – BENT
2. CLR – CLEAR
3. EF – EACH FACE
4. EW – EACH WAY
5. GALV – GALVANIZED
6. OC – ON CENTER
7. TYP – TYPICAL
8. SS – STAINLESS STEEL
9. OD – OUTSIDE DIAMETER
10. CC – CENTER TO CENTER

U.S. DEPARTMENT OF AGRICULTURE
FOREST SERVICE
PLUMAS NATIONAL FOREST
NEVADA CITY, CALIFORNIA

NO.	DATE	BY	APPR	DESCRIPTION

REVISIONS

Tetra Tech, EM Inc.
San Francisco, California

DESIGNED BY: G. STURM
CHECKED BY: J. BOSCHE
DRAWN BY: A. CADE
APPROVED BY: J. BOSCHE

WALKER MINE MISCELLANEOUS DETAILS

USDA FOREST SERVICE
PLUMAS NATIONAL FOREST

SCALE	DATE ISSUED	CAD FILE NO.	DRAWING NO.
NTS	10/21/2005	DOLLY CREEK.DWG	11 OF 12

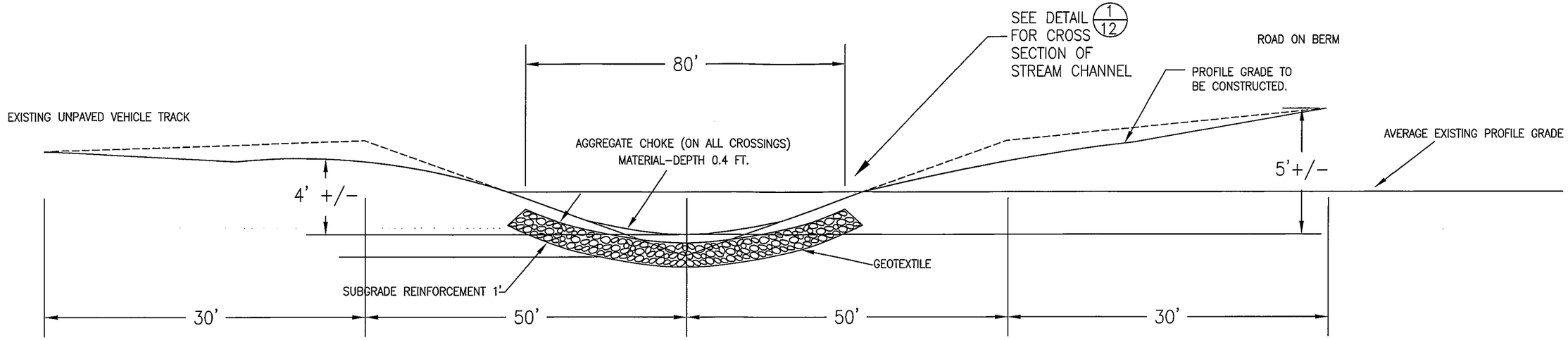

PROFILE VIEW

LOOKING DOWNSTREAM ALONG DOLLY CREEK

N.T.S.

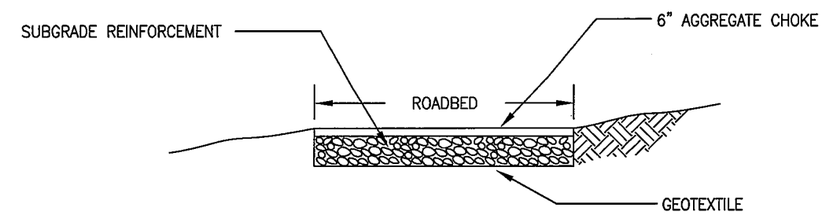

CROSS SECTION VIEW 1/12

N.T.S.

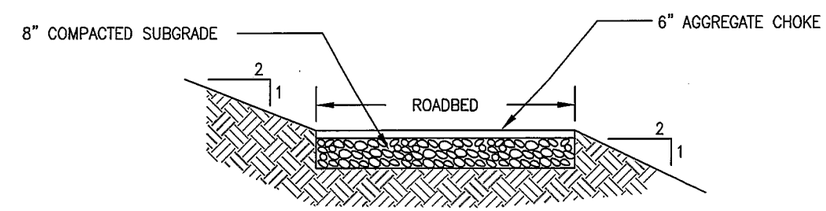

CROSS SECTION VIEW

NEW ROAD (DETAIL B) 2/12

NOTES:

CONSTRUCT LOW WATER CROSSING AT LOCATION SHOWN ON THE DRAWINGS.

ANY BORROW MATERIAL REQUIRED OR EXCESS MATERIAL TO BE WASTED SHALL TREATED AS SPECIFIED.

OUTLET DIMENSIONS WILL VARY TO CONFORM WITH NATURAL DRAINAGE

ELEVATION.

SUBGRADE REINFORCEMENT ROCK SHALL BE CLASS II RIPRAP WITH AGGREGATE CHOKE, CRUSHED AGGREGATE BASE COURSE GRADING 2 UNLESS SHOWN OTHERWISE.

UNLESS SPECIFIED OTHERWISE, SUBGRADE REINFORCEMENT FINISHED WIDTH SHALL BE EQUAL TO THE FINISHED ROADBED WIDTH SHOWN ON DRAWINGS.

GEOTEXTILE IS SPECIFIED, FURNISH AND INSTALL, FUNCTION F, TYPE 3, SECTION 720 SUBGRADE REINFORCEMENT ON ALL LOW WATER CROSSINGS.

LOW WATER CROSSINGS CONSTRUCTED UNDER SECTION 203 SHALL USE TOLERANCE CLASS "A"

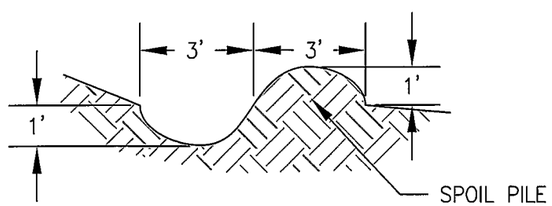

RUN–ON CONTROL DITCH SECTION (TYP.) 2/4,8

1. DITCH SLOPE TO MATCH EXISTING TOPOGRAPHY.

U.S. DEPARTMENT OF AGRICULTURE
FOREST SERVICE
PLUMAS NATIONAL FOREST
NEVADA CITY, CALIFORNIA

NO.	DATE	BY	APP'D	DESCRIPTION

REVISIONS

Tetra Tech, EM Inc.
San Francisco, California

DESIGNED BY: G. STURM
CHECKED BY: J. BOSCHE
DRAWN BY: A. CADE

APPROVED BY: J. BOSCHE

WALKER MINE
STREAM CROSSING DETAIL
USDA FOREST SERVICE
PLUMAS NATIONAL FOREST

SCALE	DATE ISSUED	CAD FILE NO.	DRAWING NO.
NTS	10/21/2005	DOLLY CREEK.DWG	12 OF 12